ORBITAL LAUNCH FACILITY STUDY

CONTRACT NO. NAS 8-11355

D2-82559-2 VOLUME II - B

OLF STUDY
TECHNICAL REPORT

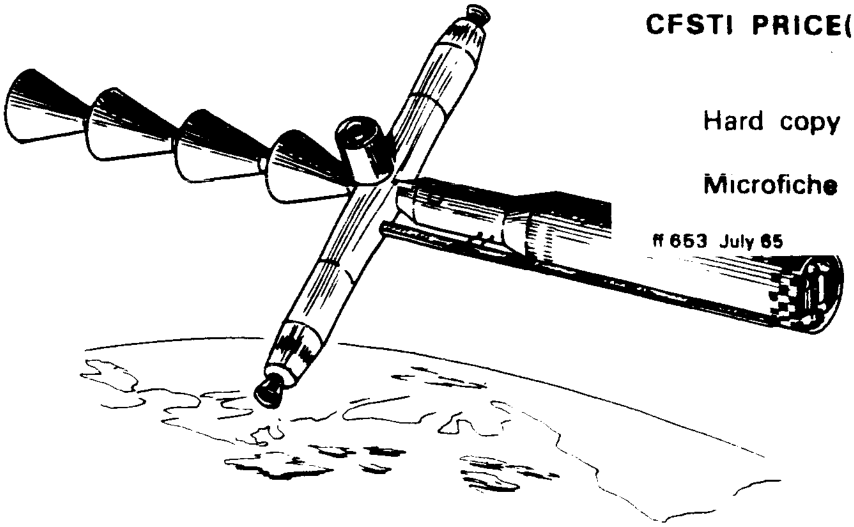

PREPARED FOR

NATIONAL AERONAUTICS AND SPACE ADMINISTRATION

GEORGE C. MARSHALL SPACE FLIGHT CENTER

THE BOEING COMPANY AERO-SPACE DIVISION
SEATTLE, WASHINGTON

D2-82559-2

OLF STUDY TECHNICAL REPORT

FINAL REPORT

Volume II B

October 1965

Contract NAS 8-11355
Marshall Space Flight Center
National Aeronautics and Space Administration

The Boeing Company
Aerospace Division
Seattle, Washington

This document is Volume IIB, OLF Study Technical Report (Sections 5 through 7), of the final technical report of the Orbiting Launch Facility (OLF) study conducted by The Boeing Company for the Marshall Space Flight Center, National Aeronautics and Space Administration, Huntsville, Alabama, under Contract NAS 8-11355. The study was conducted under the technical supervision of Mr. William T. Carey, Jr.

The final technical report consists of four volumes:

Volume I:	OLF Study Technical Report Summary
Volume IIA:	OLF Study Technical Report (Sections 1 through 4)
Volume IIB:	OLF Study Technical Report (Sections 5 through 7)
Volume III:	OLF Study Research and Technology Implications Report

CONTENTS

VOLUME II A

VOLUME II B

5.0 DESIGN INTEGRATION

The major design effort of the study involved the design of the initial OLF, i. e., the facility for the support of the manned Mars/Venus flyby mission. In addition, however, designs were developed (in considerably less depth) of an OLF configuration to support the manned Mars landing mission and one to support the lunar ferry mission.

The design of the initial OLF involved considerable detail study. An approach was evolved which would assure that the various study objectives would be met and to accomplish this, design objectives were defined and parametric studies conducted to evolve a baseline concept on which detailed design iteration studies could be made.

With the baseline concept defined, detail design studies of the OLF configuration, its equipment, and on-board systems were made. A primary objective of the design was the utilization of two MORL modules as building blocks in the design, which would be used with the minimum changes possible and still allow the requirements unique to the OLF to be met. The important goal was to use the MORL on-board systems in the integrated OLF design with minimum changes to those systems. Where possible, the identical configuration of the MORL system was used, the next choice was with additions to the configuration only, and where neither of these approaches was possible, the MORL system concept was retained with a minimum of configuration changes.

Two designs were investigated for the advanced OLF. The first utilized the initial OLF as a starting point and modified the design for the added requirements necessary to support the more sophisticated manned Mars landing mission. A parallel development also using the initial OLF as the starting point involved its evolution to support the lunar ferry mission.

5.1 Design Approach

The major design objectives of the study were to develop the design of an initial OLF to support the manned Mars/Venus flyby mission and to develop advanced concepts capable of supporting the manned Mars landing and lunar ferry missions. As mentioned previously, the initial OLF was to be developed in considerable detail, while the advanced concepts were to be developed to a lesser extent, due to the primary emphasis of the study being on the initial OLF.

Since the design effort and the operational and technical studies were undertaken concurrently, it was necessary to plan a design program which would allow useful design work to be accomplished prior to and during the generation of design requirements by the operational and technical portions of the study. Consistent with this need, a design approach was developed which is shown diagramatically in Figure 5.1-1.

To start a design effort early in the program, it was felt that a conceptual design study in which major configuration parameters were varied would be an effective approach. To do this, a representative design was developed based upon the results of earlier orbital launch operations studies conducted by LTV, (Figure 5.1-1). From this a family of designs was developed in which major parameters such as size and type of on-board power were varied. In addition, a portion of this family of designs was generated from ORL concepts, such as MORL and AES, in which the orbital launch operations requirements were accomplished by built-up designs or groups of these modules. Upon completion of the family of design concepts, they were evaluated against each other with regard to their effectiveness in accomplishing the orbital launch operations. Included in this evaluation were interim inputs from the OLF technical and operational studies, as well as the MORL, SCALE, and AOLO studies, all of which had a significant effect upon the design evaluation.

A concept selection for further study was then made, based upon the results of the technical evaluation and the recommendations of a NASA review board. This concept then became the baseline design for the design iterations resulting from inputs from the SCALE, AOLO, and MORL studies, as well as the Boeing technical and operational studies. From these iterations was finally evolved the recommended initial OLF design.

The advanced OLF concepts for the Mars landing and lunar ferry missions were then evolved, using the initial OLF as the base from which they were developed.

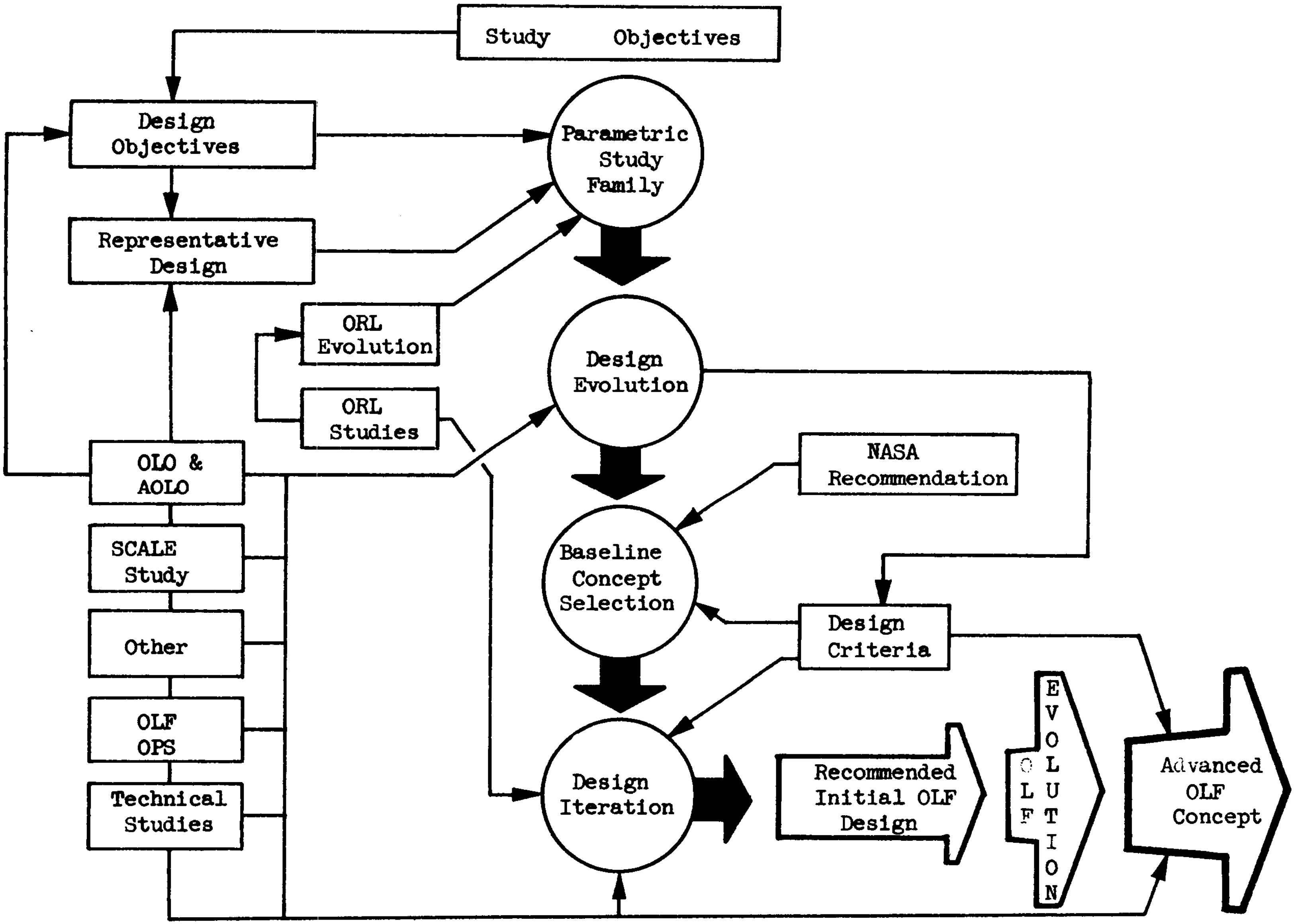

Figure 5.1-1 OLF DESIGN APPROACH

5.2 Baseline Selection

As mentioned previously, the baseline selection was made primarily through an evaluation of the parametric configuration study. The parametric study leading to the baseline selection required three major phases; the definition of design objectives, the concept development, and the concept evaluation and baseline selection.

5.2.1 Design Objectives. - It was necessary to define a list of general design objectives early in the study to be able to initiate a useful program of design work. Since no operational or technical studies had yet been conducted, it was difficult to define specific design criteria or requirements, but based upon overall study objectives and past studies conducted by LTV on orbital launch operations, it was possible to define general design objectives. The following general objectives should be considered as design goals rather than specific design criteria:

1. Provide hangar for orbital support equipment (OSE).

2. Make optimum use of existing concepts (AES, MORL)

3. Centrifuge as the primary mode of crew gravitational conditioning with vehicle artificial "g" capability as an alternate mode.

4. Design for maximum shirtsleeve environment.

5. Design for ease of maintenance.

6. Design to minimize crew extravehicular time.

7. Consider growth capability for support of more sophisticated missions.

8. Orbital operational requirements shall be borne by the OLF where possible with a minimum performance penalty to the OLV.

9. Incorporate flexibility into the OLF concept.

In considering these general design objectives for the parametric design study, they were essentially used as goals in the development of the parametric designs. It should be noted, however, that in conducting the study variations were made from these general goals in an attempt to determine the relative cost and/or advantages of certain of these objectives. For example, zero "g" and "no hangar" concepts were investigated, as well as concepts providing hangars and artificial "g".

A few comments are in order relative to these design objectives:

- Although the need for a hangar may vary through a spectrum of requirements from no hangar at all to one which actually houses the orbital launch vehicle itself, four different degrees of hangaring suggest themselves; no hangar, hangar for OSE only, hangar for OSE and logistics vehicles, and hangar for OSE, logistics vehicles, and orbital launch vehicle. For the initial OLF design, hangaring of OSE was selected as an objective, since this equipment is used in the orbital launch operations. It was felt that hangaring the OLV would be impractical because of its size. It was also felt unnecessary to hangar the logistic vehicles, except for maintenance.

. The objective of using existing hardware concepts in the development of the OLF is an obvious advantage and should reduce the magnitude of the OLF developmental program. This also satisfies a program objective of evolving the OLF through an ORL development or ORL evolution.

. Based upon present knowledge, it was assumed that a centrifuge will provide the biological gravitational conditioning required by man. Since this equipment permits operation at zero "g" for a less complex facility operation, particularly during orbital launch operations, it was selected as the primary mode. Artificial "g" capability was required, however, as an alternate mode.

. Three obvious objectives primarily for the simplification of operations aboard the OLF, were design for maximumshirtsleeve environment, design for ease of maintenance, and design to minimize crew extravehicular time.

. While the baseline design was to be developed primarily for the initial OLF in support of the manned Mars or Venus flyby mission, growth capability of the concept is none the less a desirable characteristic for possible support of more sophisticated missions such as the manned Mars landing.

. An important design objective is number 8. The mission vehicle will certainly be penalized to the minimum extent by OLO operations. The OLF, being only in Earth orbit, will be able to stand the mass and performance penalties resulting from orbital operations requirements much more efficiently from the overall mission standpoint than the planetary missions vehicle.

. The last objective refers to the capability of the concept to provide flexibility to system changes. The capability of adapting easily to different operational modes or types of equipment with only minor changes in the concept was felt to be a desirable objective; for example, the capability of launching the OLF concept by one Saturn V or a number of Saturn I-Bs might be desirable.

5.2.2 Concept Development. - As mentioned earlier, to develop a baseline concept from which detail design iteration studies could be made, a program of parametric design studies was embarked upon in which major parameters were varied. These designs were not developed in depth, but used largely parametric data, and the primary emphasis was on those parameters which affected the overall Mars configuration variations, rather than internal design details.

Two approaches were used in the development of the parametric study; in the one case, a preliminary baseline concept was developed and variations from it made, and in the other, various concepts utilizing orbital research laboratories were developed. Figure 5.2-1 diagrams the parametric study plan. This diagram indicates the various concepts developed as well as the evaluation parameters and finally, the selection of the recommended concept.

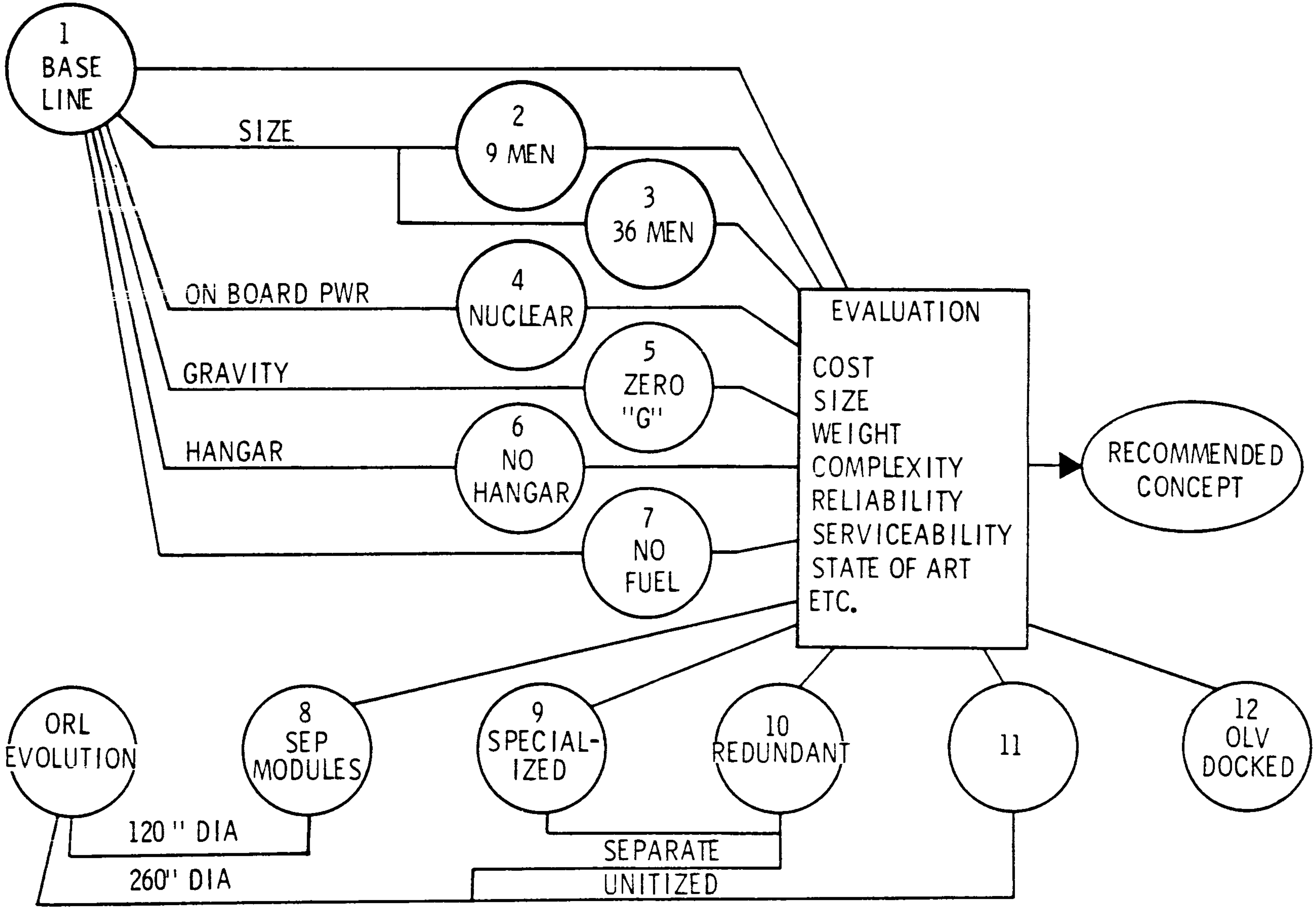

Figure 5.2-1 OLF PARAMETRIC DESIGN STUDY

5.2.2.1 Parametric Study Ground Rules. - To assure consistency in the design of the various concepts investigated in the parametric study, it was necessary to define certain general ground rules to serve as a guide for the design exercise. Generally, only the major parameters were considered or those which had a significant effect on the shape, size, weight, or appearance of the OLF. Since this parametric study was undertakne very early in the OLF program, little Boeing data was available on which to base these general ground rules and it was necessary to draw upon previous OLF studies to provide the information upon which they were based. The Ling-Temco-Vought OLO studies were used as primary guidelines for these ground rules.

Ground rules for the parametric study were not only general in nature, but also were, in many cases, revised for the eventual baseline design as inputs became available from the AOLO and SCALE studies, as well as the Boeing OLF technical and operational studies. It was not possible to follow the exact guidelines in all cases; for example, in using the modular concepts, the space allowance per crewman varied somewhat from that allowed in the general ground rules. The ground rules were, however, followed as closely as possible to provide consistency for the evaluation.

FIGURE 5.2-2 PRELIMINARY PARAMETRIC STUDY GROUND RULES

1. CREW PROVISIONS

   a. Size facility for 18 men including -

      3 - OLV mission crew
      9 - OLV checkout crew
      1 - OSE crew
      5 - OLF proper crew

   b. Provide space allowance per man and personal equipment of approximately 22m^3 (800 ft.^{3}).

2. GENERAL

   a. Provide artificial gravity.

   b. Provide emergency escape vehicles at OLF.

   c. Store mission fuel at the OLF.

   d. Provide simultaneous docking or storage for all supporting vehicles used in orbital launch operations, (i. e., OSE, logistic spacecraft).

3. POWER

   a. Provide 24 kW of on-board power, including 2.6 kW for checkout equipment (for 18-man facility).

FIGURE 5.2-2 PRELIMINARY PARAMETRIC STUDY GROUND RULES - continued

4. STRUCTURE

   a. Design for 10.1 meter (33 feet) diameter envelope.

   b. Design structure for .95 probability of no meteoroid puncture for 5 years.

5. LOGISTICS

   a. Provide for a 90-day logistics schedule.

   b. Crew rotation every 6 months (one-half crew every 90 days).

6. CHECKOUT, MAINTENANCE AND DATA MANAGEMENT EQUIPMENT

   a. Mass = 915 kg (2010 pounds)

   b. Volume = .95 cu. M (33.7 cu. ft.)

   c. Power = 2.6 kilowatts

7. SPARES

   a. OLV Spares

      Mass = 6780 kg (15,000 pounds)
      Volume = 28.3 cu. M (1000 cu. ft.)

   b. OLF Spares

      Mass = 4536 kg. (10,000 pounds)

      Volume - 18.8 cu. M. (667 cu. ft.)

The parametric designs developed were conceptual in nature and the drawings made reflected only the major configuration parameters such as size, shape, and external features such as solar panels. Internal details were developed only to a very limited extent, showing such features as crew compartments and hangar areas. Subsystem design was not attempted in the development of these concepts and the configuration drawings do not show details of these subsystems. Space allowance was made, however, for subsystems and in the mass analysis of the designs allowance was made for all required systems such as on-board power, propulsion, environmental control, life support, and others, based upon parametric data.

5.2.2.2 Parametric Concept Number 1. - Figure 5.2-3 shows the first of the parametric configurations developed for this study. As mentioned previously, this configuration reflected the best initial guess as to what the OLF should be, based upon earlier studies, and served as a baseline concept for the parametric study.

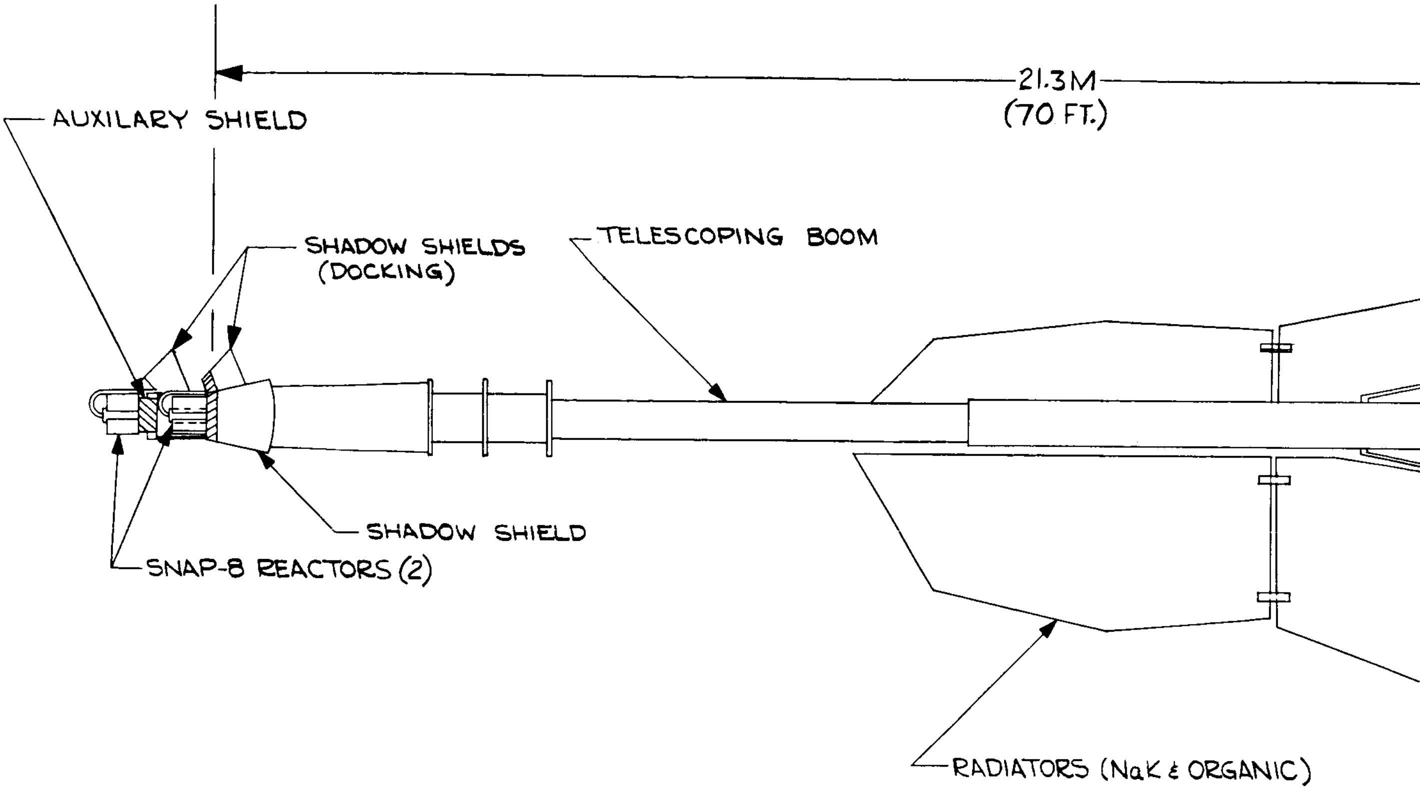
21.3M
(70 FT.)
AUXILARY SHIELD
SHADOW SHIELDS
(DOCKING)
TELESCOPING BOOM
SHADOW SHIELD
SNAP-8 REACTORS (2)
RADIATORS (NaK & ORGANIC)

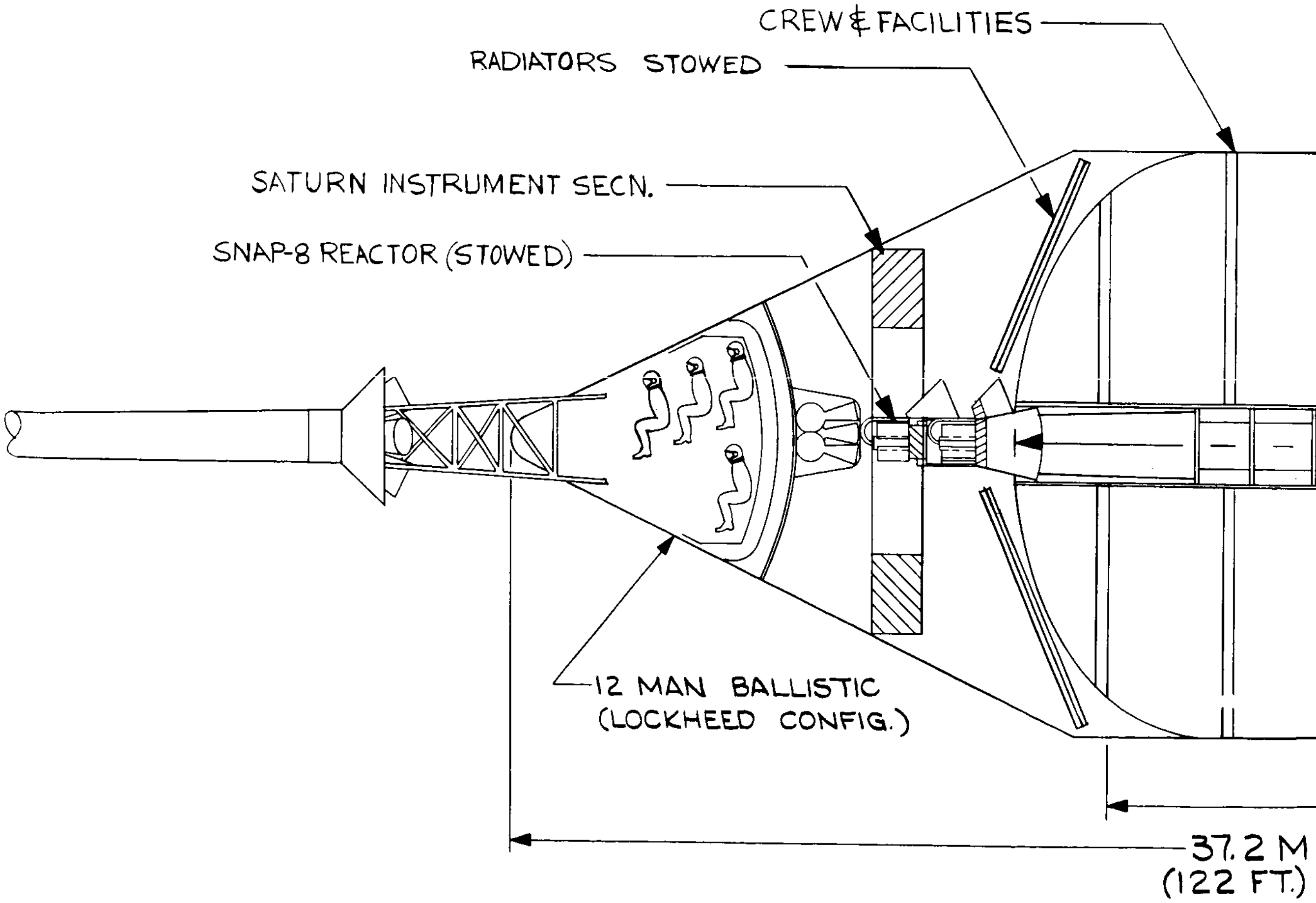
CREW & FACILITIES
RADIATORS STOWED
SATURN INSTRUMENT SECN.
SNAP-8 REACTOR (STOWED)
12 MAN BALLISTIC
(LOCKHEED CONFIG.)
37.2 M
(122 FT.)

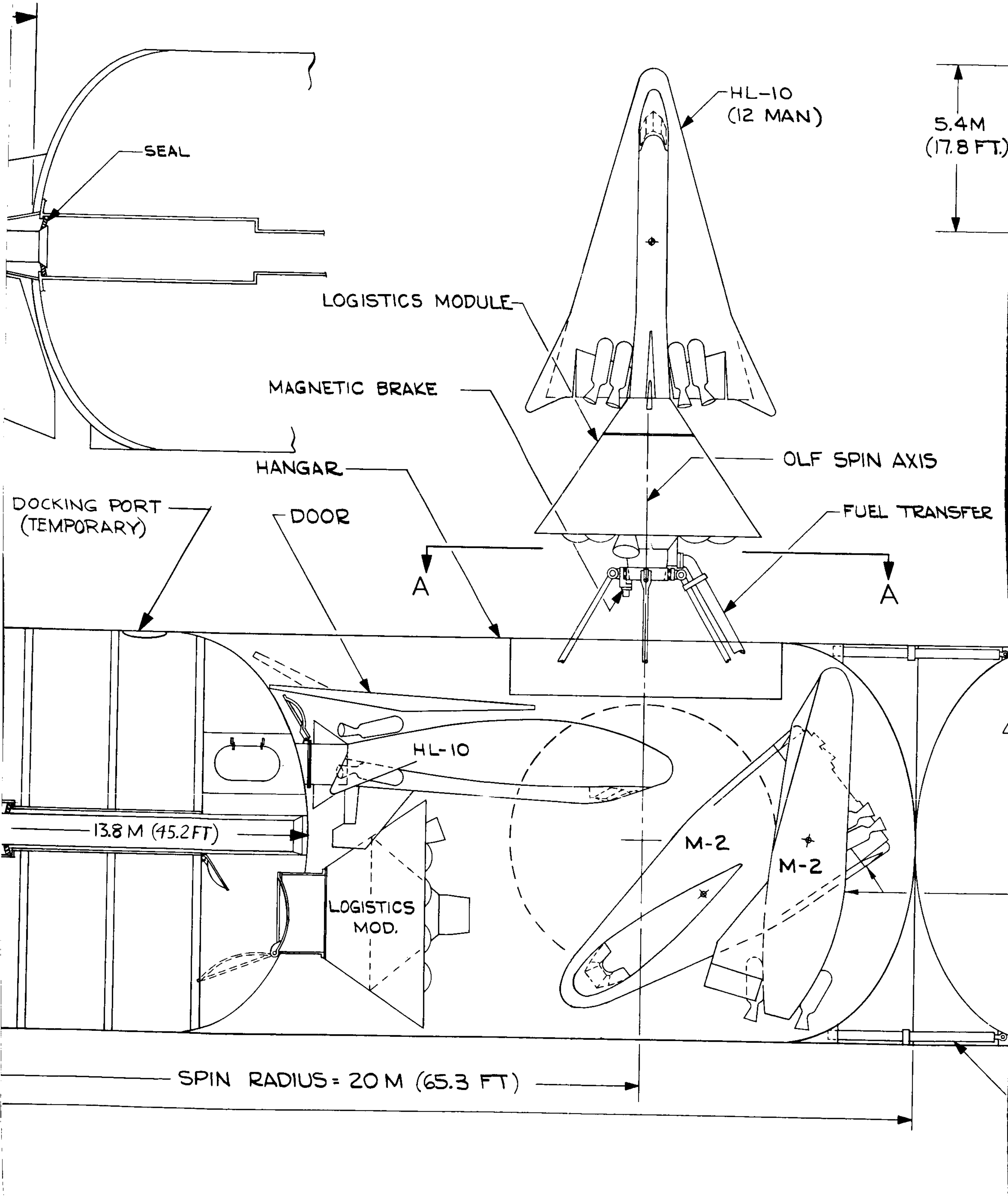
SEAL
HL-10
(12 MAN)
5.4M
(17.8 FT.)
LOGISTICS MODULE
MAGNETIC BRAKE
OLF SPIN AXIS
HANGAR
DOCKING PORT
(TEMPORARY)
DOOR
FUEL TRANSFER
A
A
HL-10
13.8 M (45.2 FT)
M-2
M-2
LOGISTICS
MOD.
SPIN RADIUS = 20 M (65.3 FT)

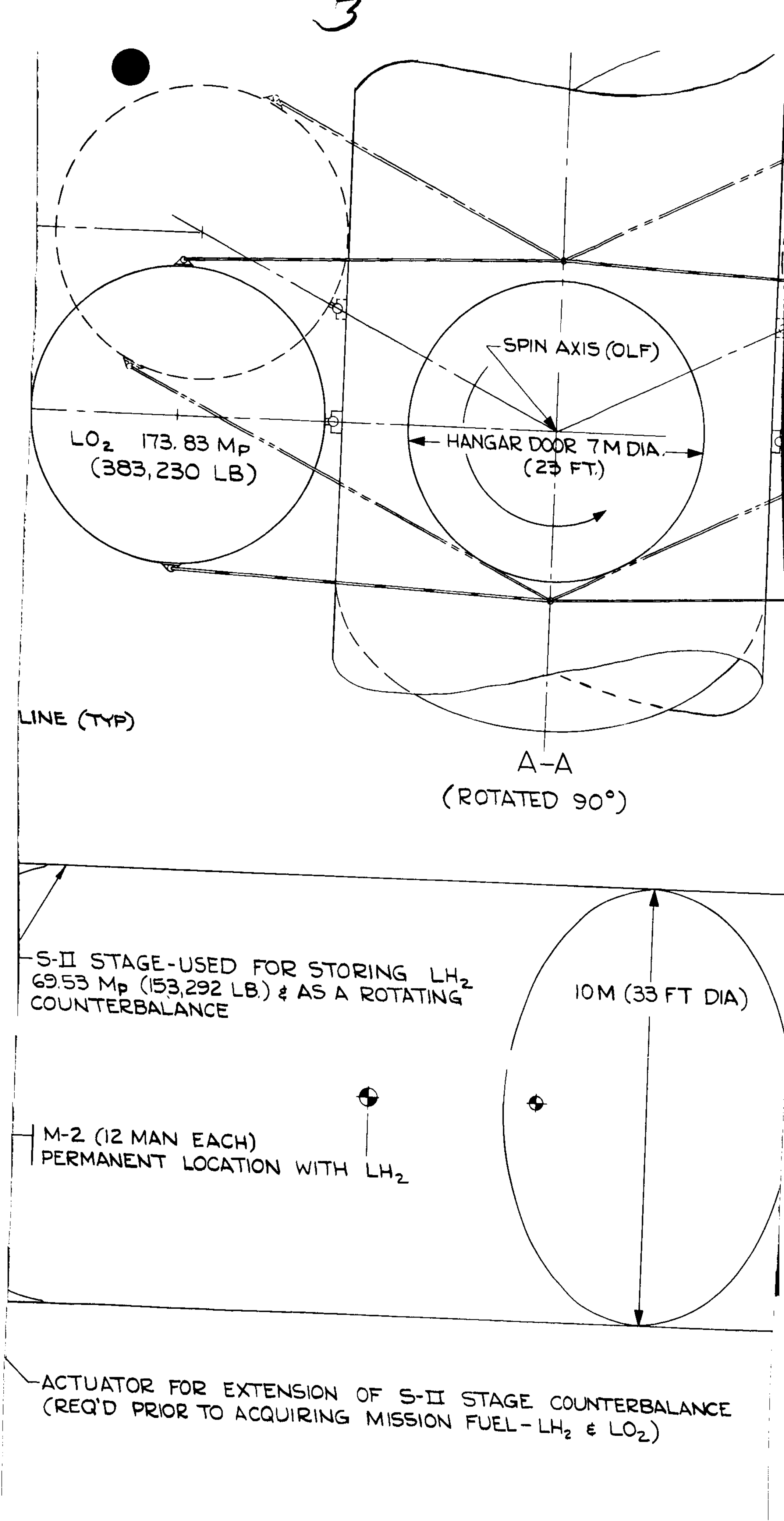
3
SPIN AXIS (OLF)
LO2 173.83 Mp
(383,230 LB)
HANGAR DOOR 7 M DIA.
(23 FT.)
LINE (TYP)
A-A
(ROTATED 90°)
S-II STAGE-USED FOR STORING LH2 69.53 Mp (153,292 LB.) & AS A ROTATING COUNTERBALANCE
10 M (33 FT DIA)
M-2 (12 MAN EACH)
PERMANENT LOCATION WITH LH2
ACTUATOR FOR EXTENSION OF S-II STAGE COUNTERBALANCE
(REQ'D PRIOR TO ACQUIRING MISSION FUEL - LH2 & LO2)

4

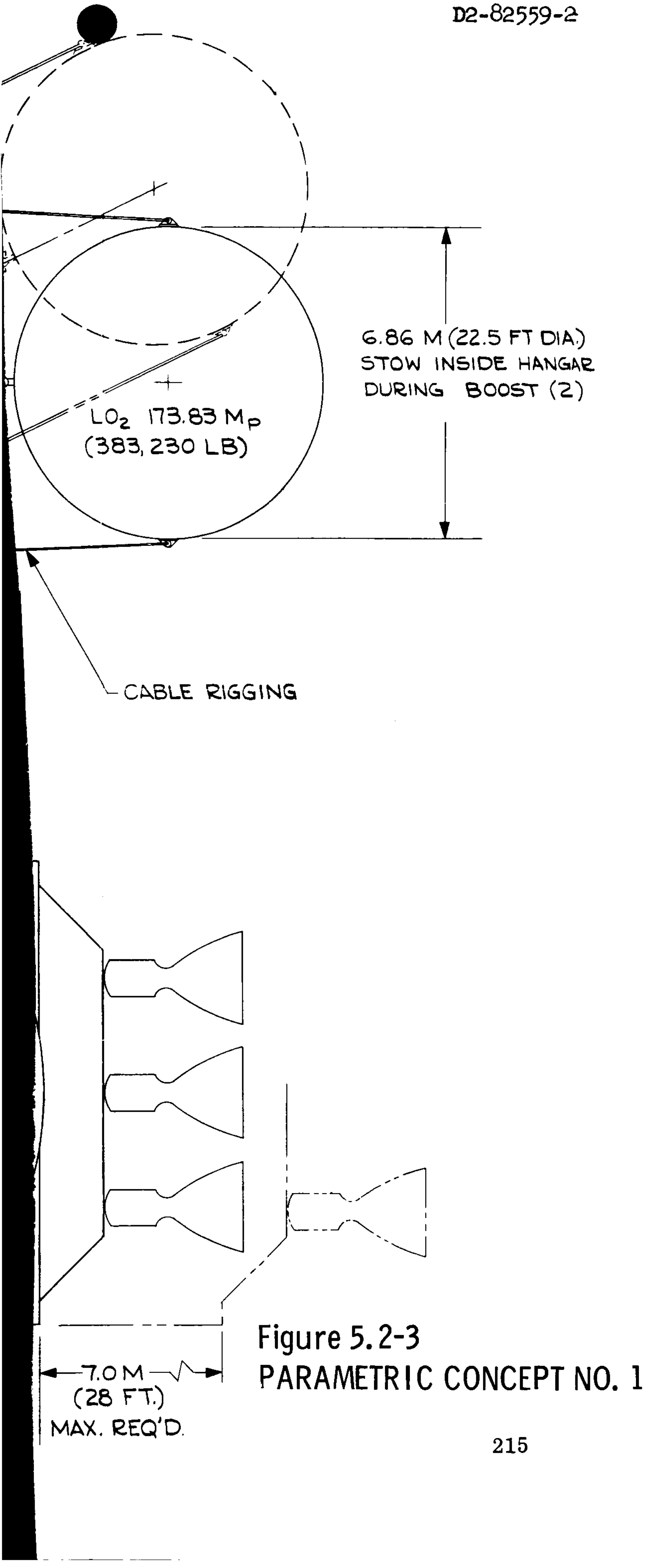

Figure 5.2-3
PARAMETRIC CONCEPT NO. 1

The entire facility and 12 crewmen are launched by a single Saturn V vehicle. As shown in the drawing, the expended S-II stage remains attached to the OLF and serves both as a rotating counterbalance and may with improved insulation characteristics, serve as a vessel in which to store the OLV liquid hydrogen for the Mars mission. Note in the figure an actuator system is provided so that the position of the S-II stage may be shifted to compensate for different loading conditions that must be maintained.

In this concept both the OLV fuel and LO_2 tanks are attached to the OLF. As shown in Section A-A, the two LO_2 tanks are mounted perpendicular to the spin axis, which makes a "four-spoke configuration". Full of oxygen (for the Mars mission), these two tanks produce essentially the same moment of inertia about the spin axis as does the remaining entire complex with the S-II stage attached, thus providing good stability in the spin axis. While stability is reduced when the tanks are empty, the facility will still function satisfactorily. With this configuration, artificial gravity is achieved in a feasible manner without the necessity of separating the crew into modules or compartments. Also by rotating the entire complex, the Mars mission fuel is placed in an artificial gravitational field and the problem of transferring fuel is alleviated. The oxygen tanks (shown in Section A-A) are stowed inside the hangar during launch from Earth and after orbit establishment are removed through the hangar door (utilizing the docking and track mechanism) and hooked to the pivot links and stabilization cables as shown.

The hangar area is launched as a completely integral part of the facility and requires no orbital assembly. It is located in the region of the spin axis, which provides nearly a zero gravity condition for the handling of logistics supplies and support vehicles. Essentially, the hangar serves as a storage bay and shelter for the crew escape vehicles and for the orbital maintenance, crew rescue, or any other type of specialized vehicles. Also, major maintenance to the vehicles should be simplified within the hangar. The hangar is designed as a pressure vessel, though it may seldom be pressurized, except when major repairs must be made to the support vehicles. The hangar door always remains inside the hangar; thus, a pressurization load will assist in sealing the door. Since the hangar is so large, it may reduce weight to use an inflatable hangar sized to a single vehicle and inflate this inside the facility hangar. Further study will be necessary to evaluate these trades.

The concept employs a docking mechanism which allows vehicles to dock to the OLF facility while it is in an artificial "g' spinning mode. During docking maneuvers, the vehicle first makes contact with a docking ring mounted on a bearing race attached to the facility docking mechanism. This race allows roll freedom about the spin axis of the facility. After docking a magnetic brake (across the bearing race) is activated to slowly bring the angular velocity of the docked vehicle up to that of the facility. The mechanism then retracts into the hangar with the vehicle. Tracks of similar mechanisms will be used to maneuver support vehicles to specific locations within the hangar. The tracking mechanism is also integrated with the docking mechanism.

An operating crew housed in a 12-man logistic spacecraft is launched with the facility. Upon arrival in orbit the crew exits to the rear of the boost module through a pressurized tunnel to the fully pressurized crew facility. Two men in space suits pass through the airlocks into the hangar and to the docking and track mechanism control station. This mechanism is utilized to grasp the large oxygen tanks, one at a time, and move them out through the hangar door, where they are firmly held until a man attaches the cable ends (shown in Section A-A) to the tanks. The cable drum motors are activated, the docking mechanism is activated to release the tank, and the tank is pulled automatically to its operating position. The man may attach a small gas jet to the tank to keep tension on the cables during the winching operation. A man guides the tank to engage the pivot link attachment. In these operations man is required to assist and guide equipment but not to leave the facility, nor is there any need for special vehicles or equipment to accomplish the task of orbital assembly.

Following the above assembly task, one crew man releases the crew module and maneuvers it around to the docking mechanism, where it is subsequently parked inside the hangar. The Saturn instrument section remains attached to the crew module and it is removed inside the hangar.

Removal of the crew module and instrument section permits deployment of the solar panels as shown. This deployment is mechanized to be automatic, although a manual inspection of all hinge latches may be required.

After the panels are deployed and inspected, spin jets are activated to spin the facility about the axis shown. A 4 rpm of the facility, the gravity level within the crew compartment varies from .35 at the 65-foot radius to .2 at the 37-foot radius. Actuators are activated to position the S-II stage as required to achieve the spin axis shown in the drawing.

5.2.2.3 Parametric Concept Number 2. - This concept, as well as concept number 3, are iterations of the size of the baseline (concept 1), to see what effect was produced on the baseline. In concept 2, the crew size was reduced to 9 men from the 18 of the baseline concept. The assumption was also made that the reason for a reduction in crew size was that a less comprehensive checkout was required for the OLV. This in turn allowed a decrease to be made in the amount of checkout equipment. Figure 5.2-4 shows a configuration drawing of the concept. As can be seen, this concept remains the same as the baseline except for size.

The crew compartment volume, electrical power, checkout gear, and power and solar panel area were reduced. The hangar volume and the fuel storage capabilities remained unchanged. Comparing this with concept number 1, the solar panel area was reduced 43%, the overall length reduction was 2 meters (79"), and the mass reduction was approximately 14,000 kg (31,000 lbs.). One disadvantage of the length reduction is the reduction of spin radius for artificial gravity. Extension requirements for the S-II counterbalance are reduced by 1.8 meters (71"). This reduction is computed to retain the spin axis at the hangar door centerline. The design differences to the overall OLF are not appreciable even though the number or crew members is reduced to 50%. This is due in part to the fact that a minimum volume of 159 M^3 (5,600 ft^3)was allowed in the crew compartment for subsystem and facilities equipment, tankage, and storage. A volume of 22 M^3 (775 ft^3) was allowed for each crew member and his personal equipment. The crew and facilities quarters has been reduced to three major levels from the four of the baseline concept.

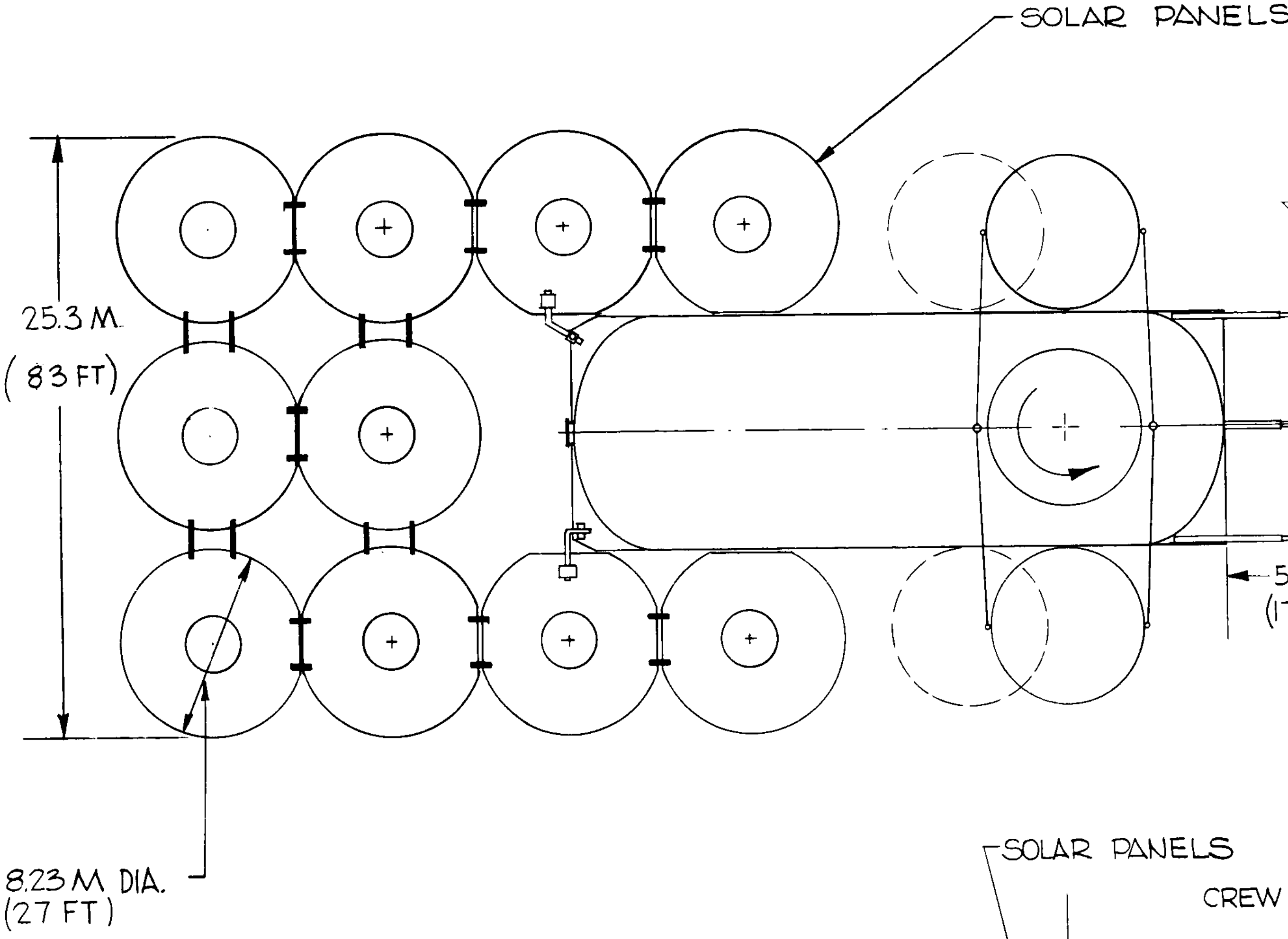
SOLAR PANELS
25.3 M.
(83 FT)
8.23 M DIA.
(27 FT)

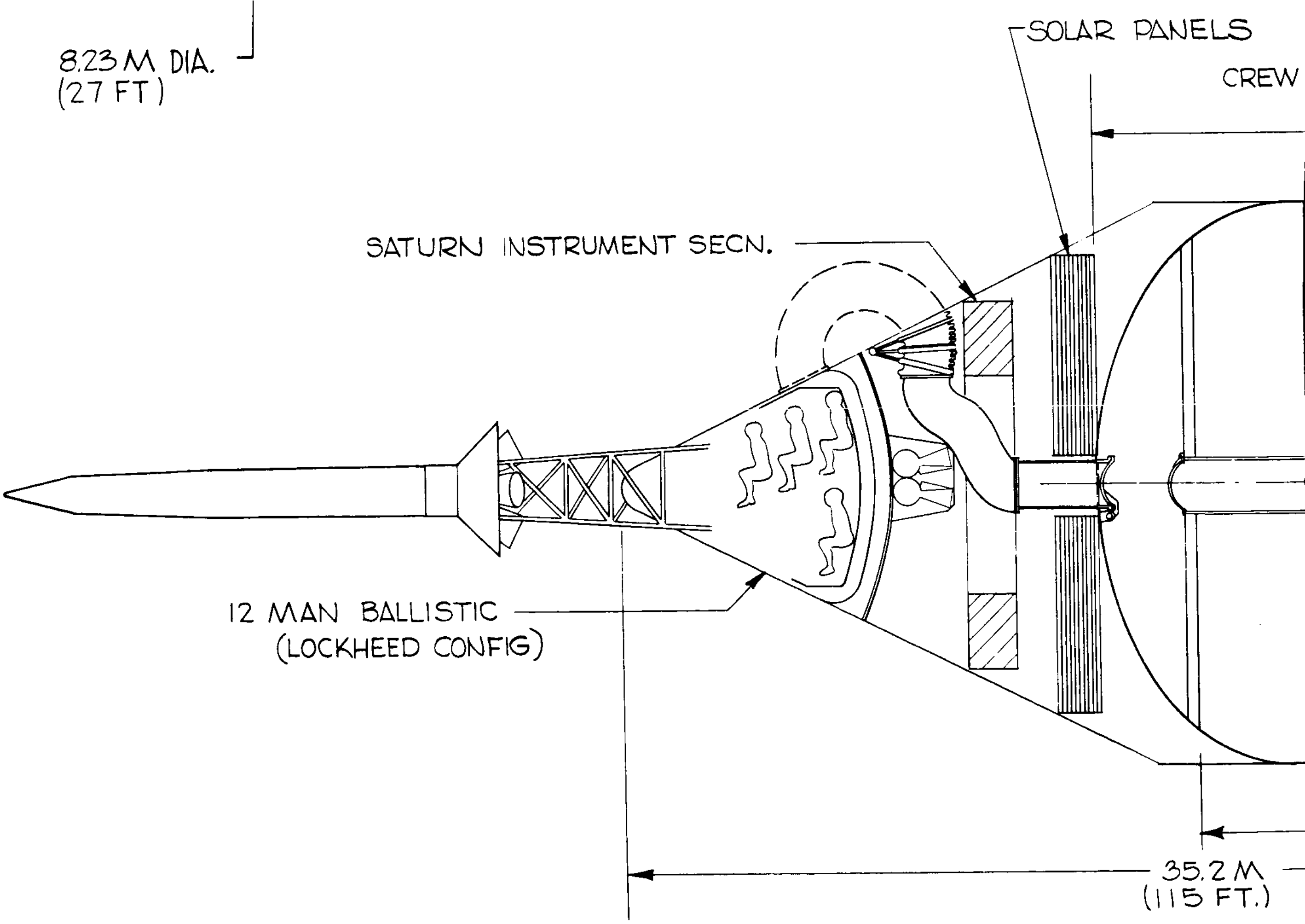
SOLAR PANELS
CREW
SATURN INSTRUMENT SECN.
12 MAN BALLISTIC
(LOCKHEED CONFIG)
35.2 M
(115 FT.)

2

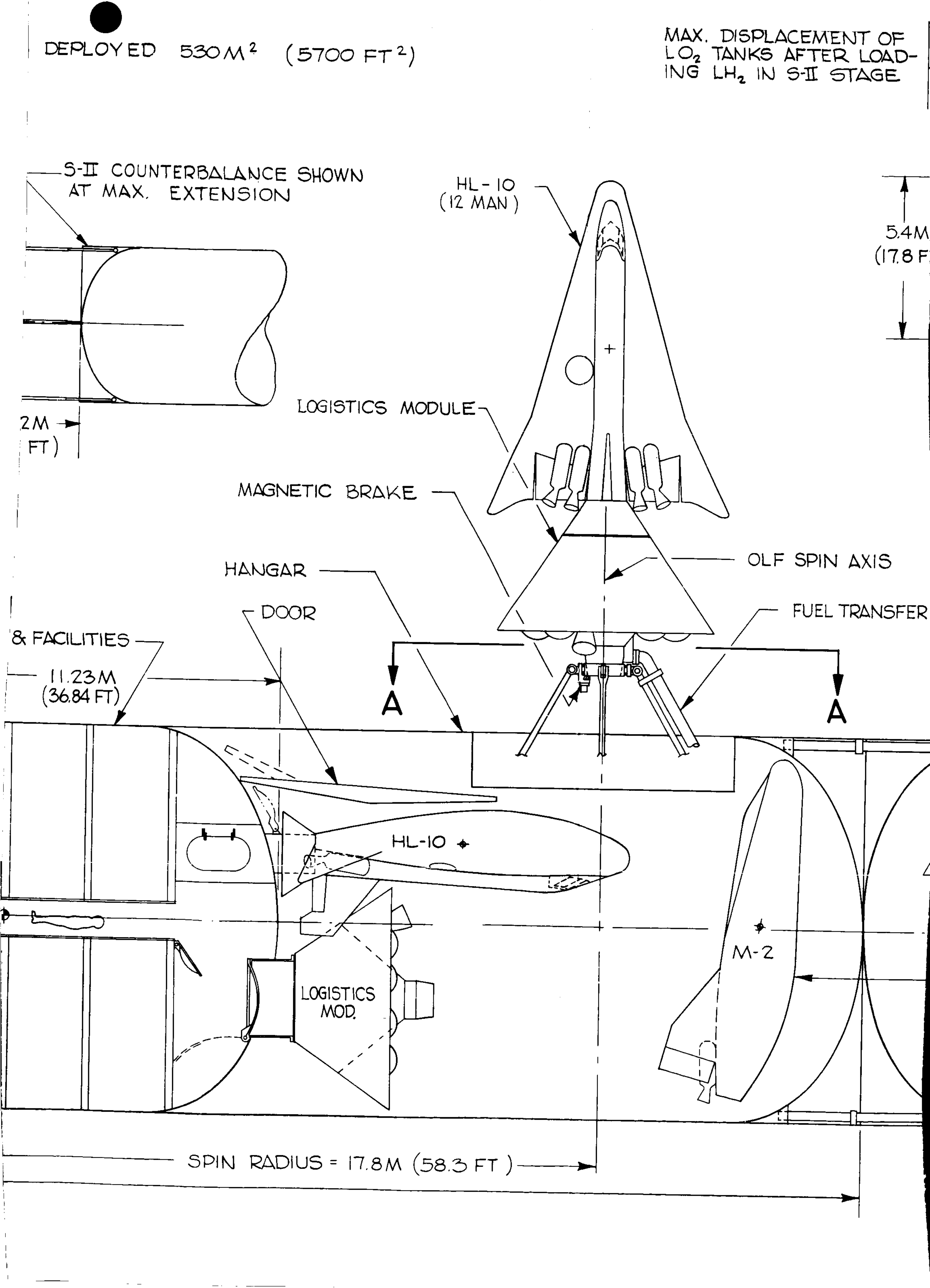
DEPLOYED 530 M² (5700 FT²)
MAX. DISPLACEMENT OF LO₂ TANKS AFTER LOADING LH₂ IN S-II STAGE
S-II COUNTERBALANCE SHOWN AT MAX. EXTENSION
HL-10 (12 MAN)
5.4M (17.8 F
2M
FT)
LOGISTICS MODULE
MAGNETIC BRAKE
OLF SPIN AXIS
HANGAR
DOOR
FUEL TRANSFER
& FACILITIES
11.23M (36.84 FT)
A
A
HL-10
LOGISTICS MOD.
M-2
SPIN RADIUS = 17.8M (58.3 FT)

3

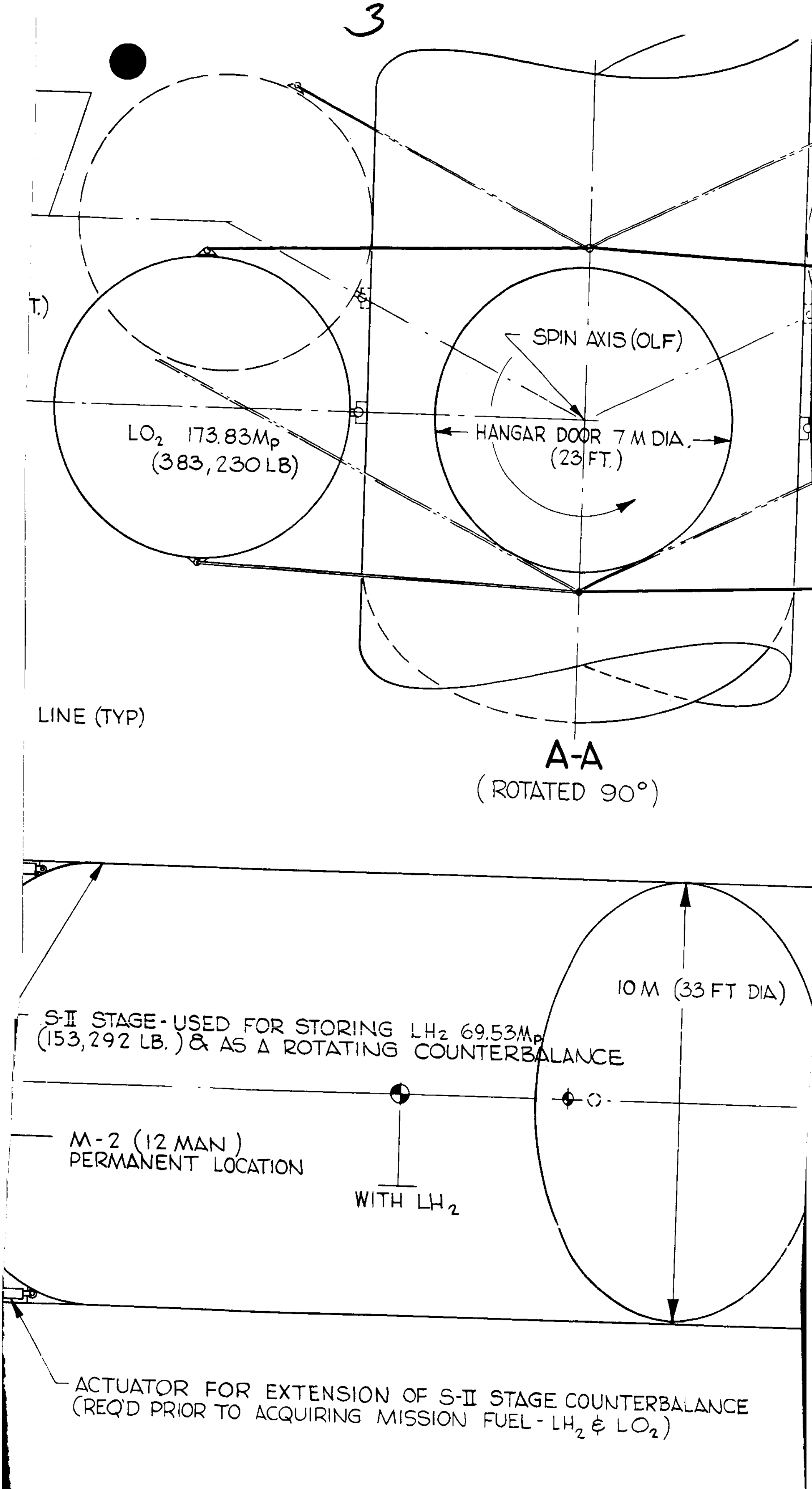
T.)
SPIN AXIS (OLF)
LO$_2$ 173.83M$_p$
(383,230 LB)
HANGAR DOOR 7 M DIA.
(23 FT.)
LINE (TYP)
A-A
(ROTATED 90°)
10 M (33 FT DIA)
S-II STAGE - USED FOR STORING LH$_2$ 69.53M$_p$
(153,292 LB.) & AS A ROTATING COUNTERBALANCE
M-2 (12 MAN)
PERMANENT LOCATION
WITH LH$_2$
ACTUATOR FOR EXTENSION OF S-II STAGE COUNTERBALANCE
(REQ'D PRIOR TO ACQUIRING MISSION FUEL - LH$_2$ & LO$_2$)

4

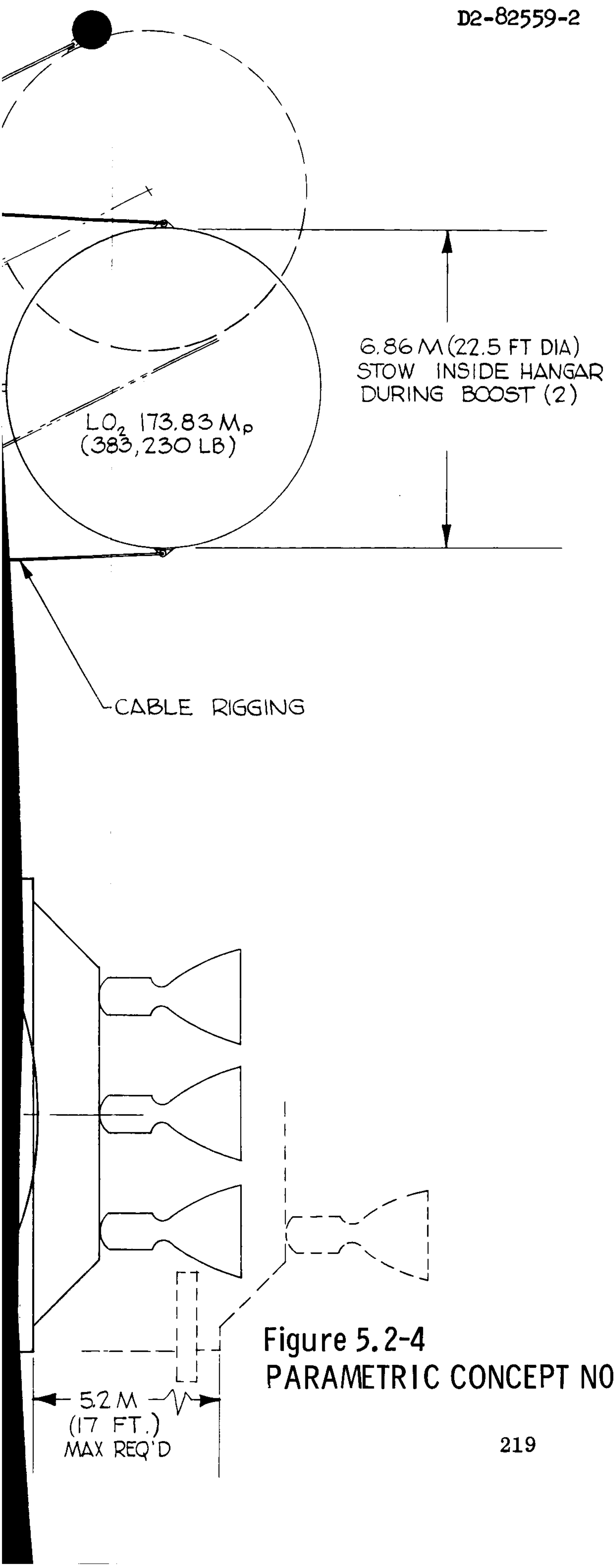

Figure 5.2-4
PARAMETRIC CONCEPT NO. 2

5.2.2.4 Parametric Concept Number 3. - Concept 3 increased the size of the crew to 36 men from the 18 provided for on the baseline. It was assumed that the reason for the increased crew size was that a more comprehensive checkout was being performed on the OLV, hence a greater allowance has been made for checkout equipment than on the baseline. Figure 5.2-5 shows a configuration drawing of the concept. The concept remains the same as the baseline except for size. Crew compartment volume, electrical power, checkout equipment and power, and solar panel area were increased. Hangar volume was slightly increased while the fuel storage capabilities remained unchanged. Comparing this with concept number 1, the solar panel area was increased from 929 M^3 (10,000 $ft.^3$) to 1,700 M^3 (18,250 $ft.^3$), the overall length increase was 10 meters (32.8 ft.) and the weight increase was approximately 27,000 kg (59,600 lbs.). Extension requirements for the S-II counterbalance increased from 7 to 22 meters (23' to 72'). The 100% increase in crew size from 18 to 36 men has a more significant effect on the OLF design than does the 50% reduction in crew size from 18 to 9 men of concept number 2. This is due in part to the fact that a minimum volume of $159M^3$ (5,600 ft^3) was allowed in the crew compartment for subsystem and facilities equipment, tankage, and storage. The solar panel area increase may be approaching an unwieldly limit -- not to mention cost. However, the drawing shows their storage and deployment allotments to be within achievable limits. The counterbalance extension of 22 meters (72') to balance the panels and crew compartment increase seems large, but actually amounts to only 2.2 body diameters. This can be accomplished with firm telescoping extension members either within the body confines or beneath fairings on the exterior. This extension is calculated to retain the spin axis at the hangar door centerline. The crew and facilities quarters have been increased to six major levels from the four of the baseline concept. Growth of the crew compartment places one floor of the living quarters at a spin radius of 24.4 meters (80'), which affords a more desirable artificial gravity level. The mass increase of 27,000 kg (59,600 lbs.) keeps the facility within the Saturn V boost capability.

5.2.2.5 Parametric Concept Number 4. - This concept remains the same as the baseline except that the on-board power system is changed from one using solar panels to one using a nuclear reactor. A SNAP-8 nuclear electric power system, plus one standby reactor and auxiliary shield, were the main components of the system. The crew size remains at 18 men and the only changes in the concept are those brought about by the nuclear power plant. The hangar complex, fuel storage, and transfer modes are unchanged. Figure 5.2-6 shows a configuration drawing of the nuclear-powered concept.

Both nuclear reactors, their shadow shield, and the electrical machinery are assembled in a cylindrical package envelope approximately 1.22 M (4 ft.) in diameter and 7.64 M (25 ft.) long. During boost, this package along with an extendable boom, is contained by the center elevator shaft of the facility. This provides a 21.3 M (71 ft.) boom with only one telescopic section. Since this equipment initially blocks personnel passage through the elevator shaft, a temporary docking port is provided on the side of the main crew compartment. The main crew vehicle separates from the front of the complex and immediately docks at this port. One or two men may then enter the facility at the accessible end of the elevator shaft and may assist the boom extension. The aft end of the boom carries a cover plate which automatically seals the shaft port when deployment is complete. Then the complex may be pressurized to accommodate the remaining

1

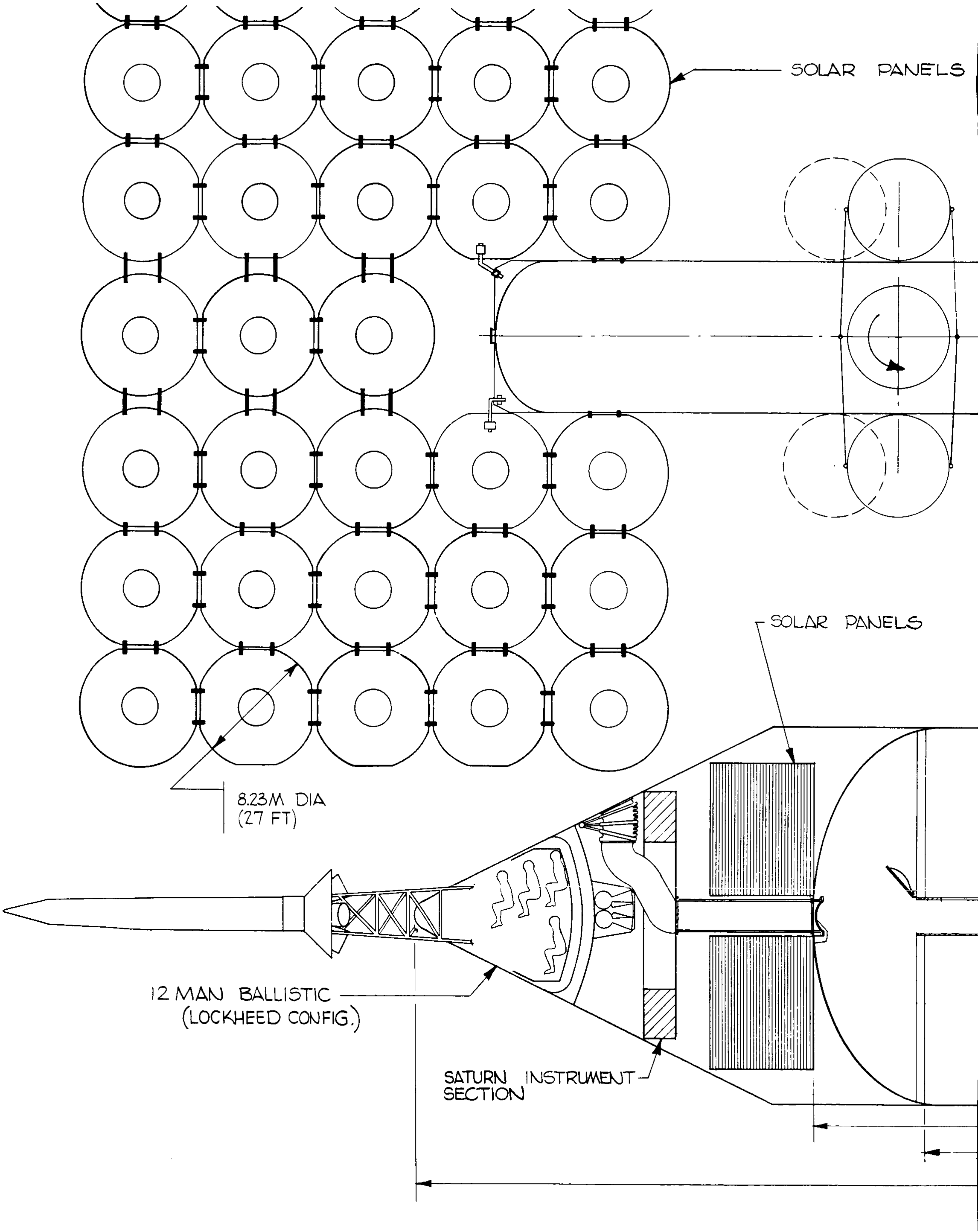
SOLAR PANELS
SOLAR PANELS
8.23M DIA
(27 FT)
12 MAN BALLISTIC
(LOCKHEED CONFIG.)
SATURN INSTRUMENT
SECTION

2

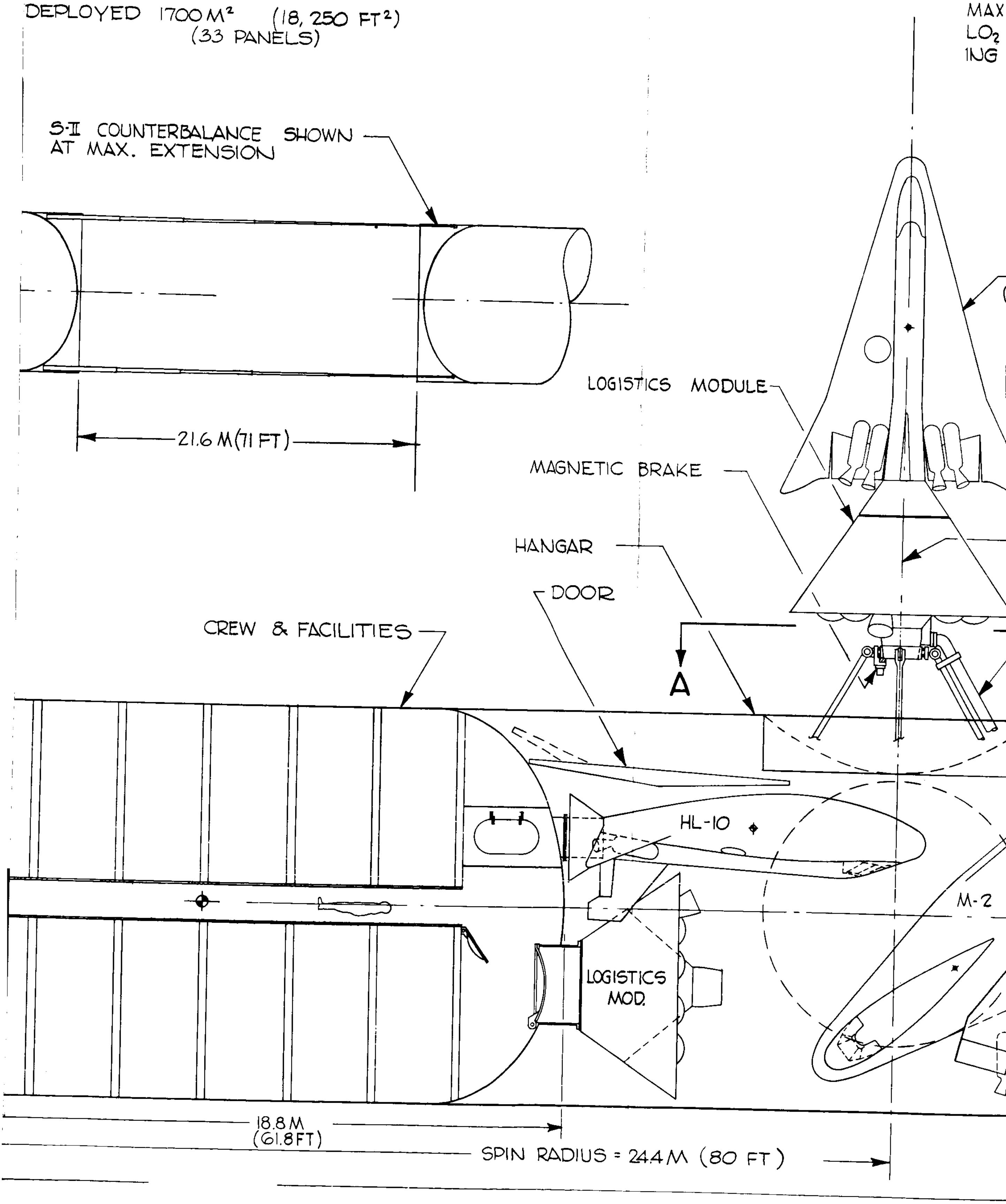
DEPLOYED 1700 M² (18,250 FT²)
(33 PANELS)
MAX
LO₂
ING
S-II COUNTERBALANCE SHOWN AT MAX. EXTENSION
21.6 M (71 FT)
LOGISTICS MODULE
MAGNETIC BRAKE
HANGAR
DOOR
A
CREW & FACILITIES
HL-10
M-2
LOGISTICS MOD.
18.8 M (61.8 FT)
SPIN RADIUS = 24.4 M (80 FT)

3

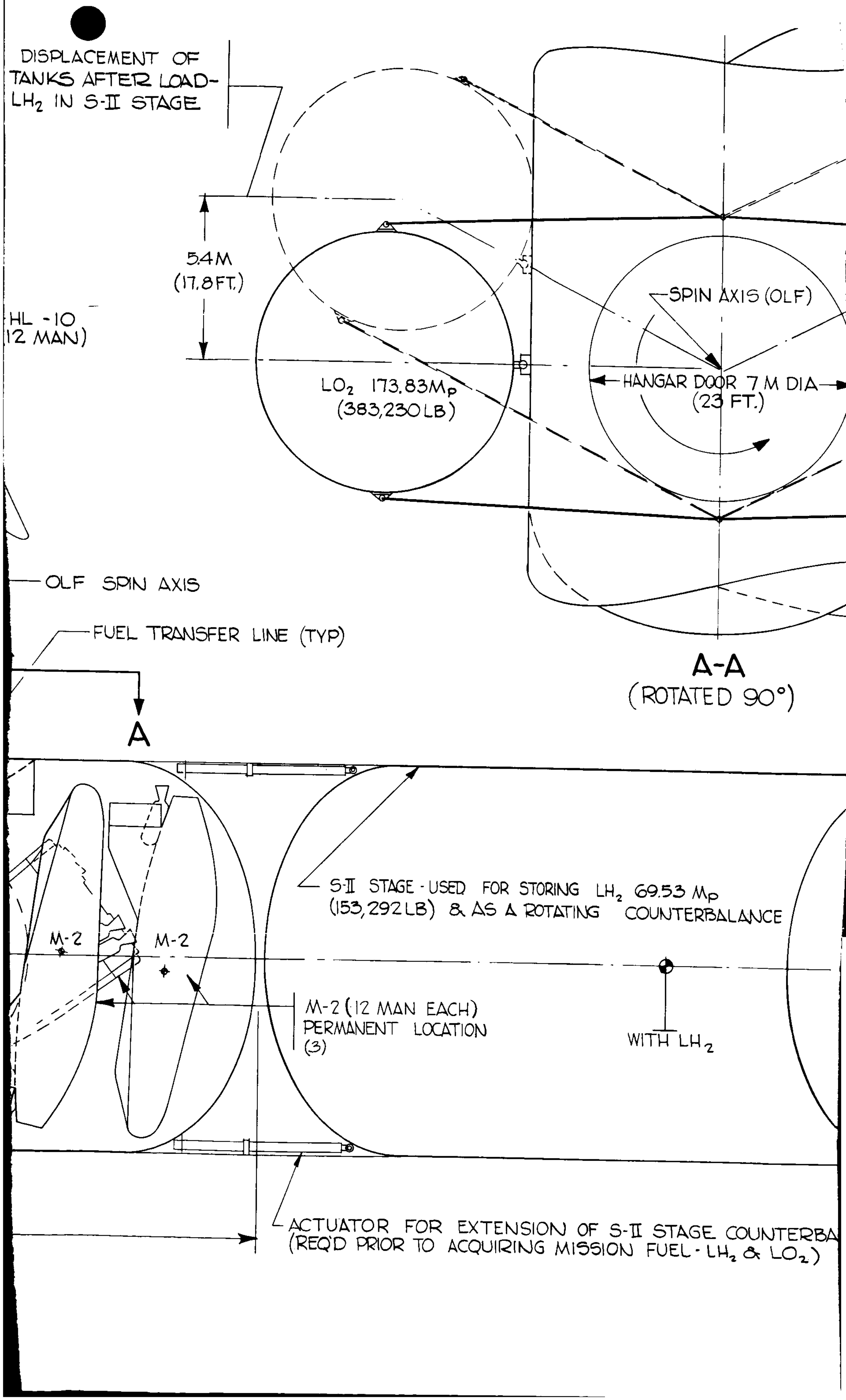
DISPLACEMENT OF TANKS AFTER LOAD-LH₂ IN S-II STAGE
5.4 M (17.8 FT.)
HL -10 (12 MAN)
LO₂ 173.83 Mp (383,230 LB)
SPIN AXIS (OLF)
HANGAR DOOR 7 M DIA (23 FT.)
OLF SPIN AXIS
FUEL TRANSFER LINE (TYP)
A-A (ROTATED 90°)
A
M-2
M-2
S-II STAGE - USED FOR STORING LH₂ 69.53 Mp (153,292 LB) & AS A ROTATING COUNTERBALANCE
M-2 (12 MAN EACH) PERMANENT LOCATION (3)
WITH LH₂
ACTUATOR FOR EXTENSION OF S-II STAGE COUNTERBA
(REQ'D PRIOR TO ACQUIRING MISSION FUEL - LH₂ & LO₂)

4

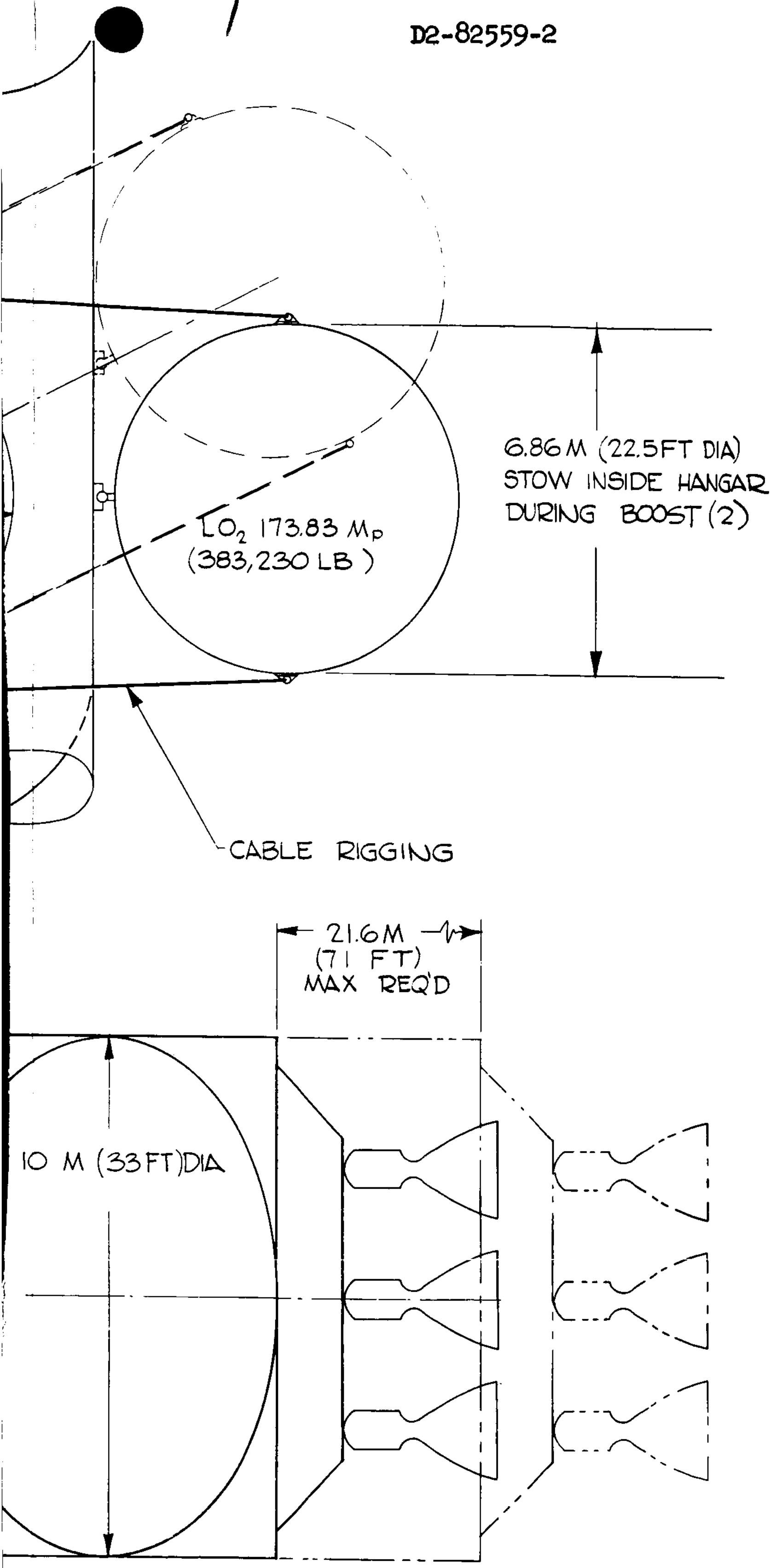

Figure 5.2-5
PARAMETRIC CONCEPT NO. 3

1

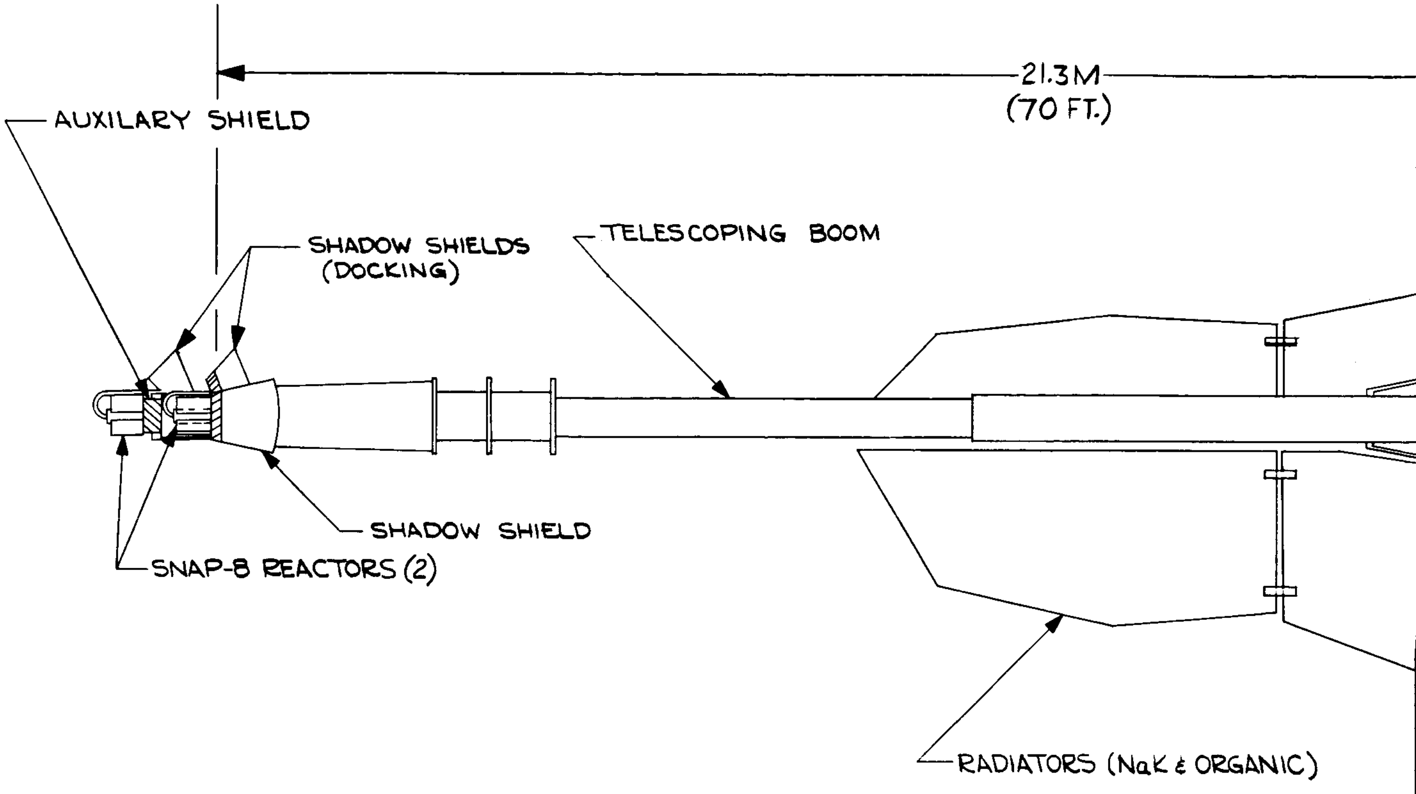
21.3M
(70 FT.)
AUXILARY SHIELD
SHADOW SHIELDS
(DOCKING)
TELESCOPING BOOM
SHADOW SHIELD
SNAP-8 REACTORS (2)
RADIATORS (NaK & ORGANIC)

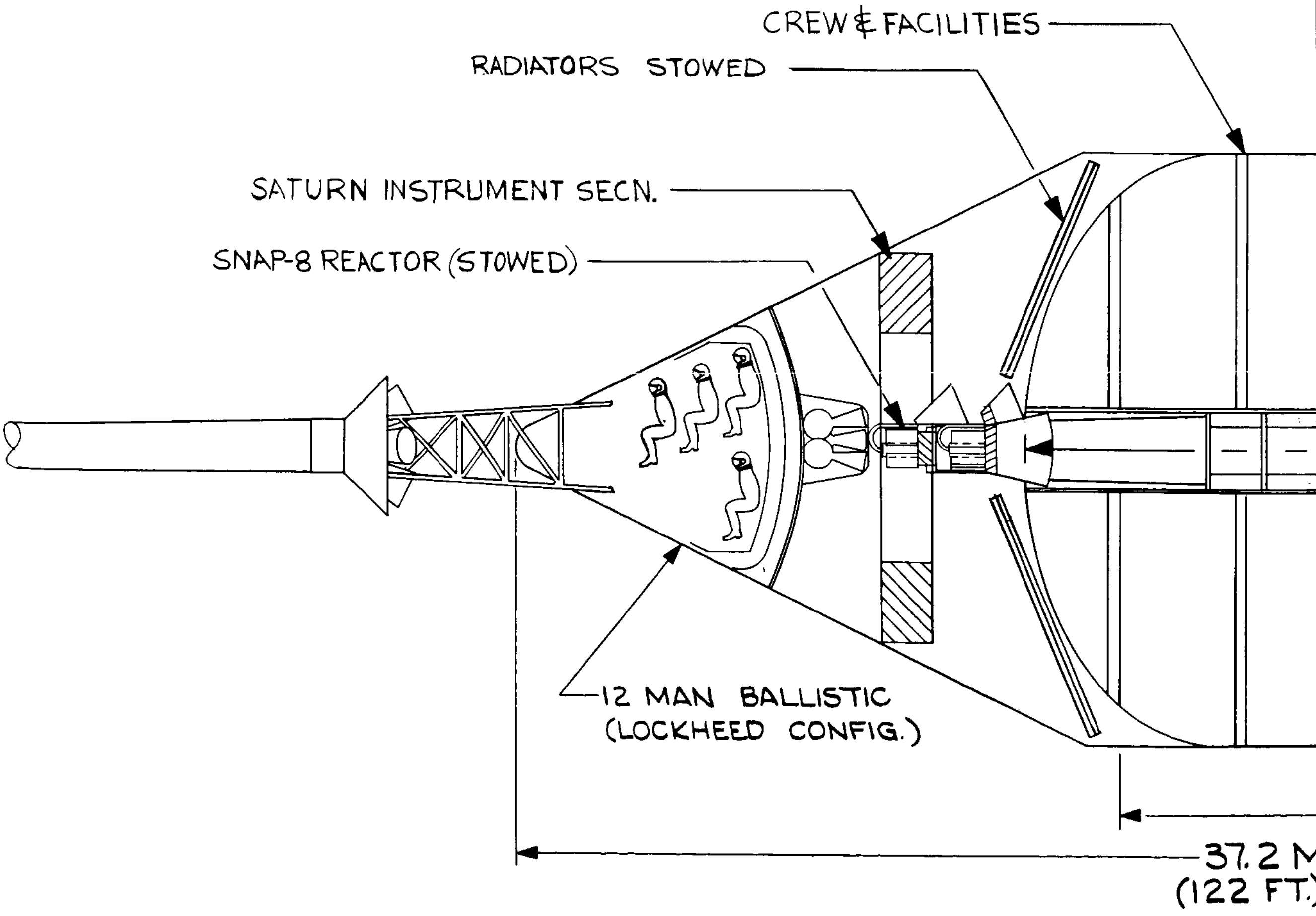
CREW & FACILITIES
RADIATORS STOWED
SATURN INSTRUMENT SECN.
SNAP-8 REACTOR (STOWED)
12 MAN BALLISTIC
(LOCKHEED CONFIG.)
37.2 M
(122 FT.)

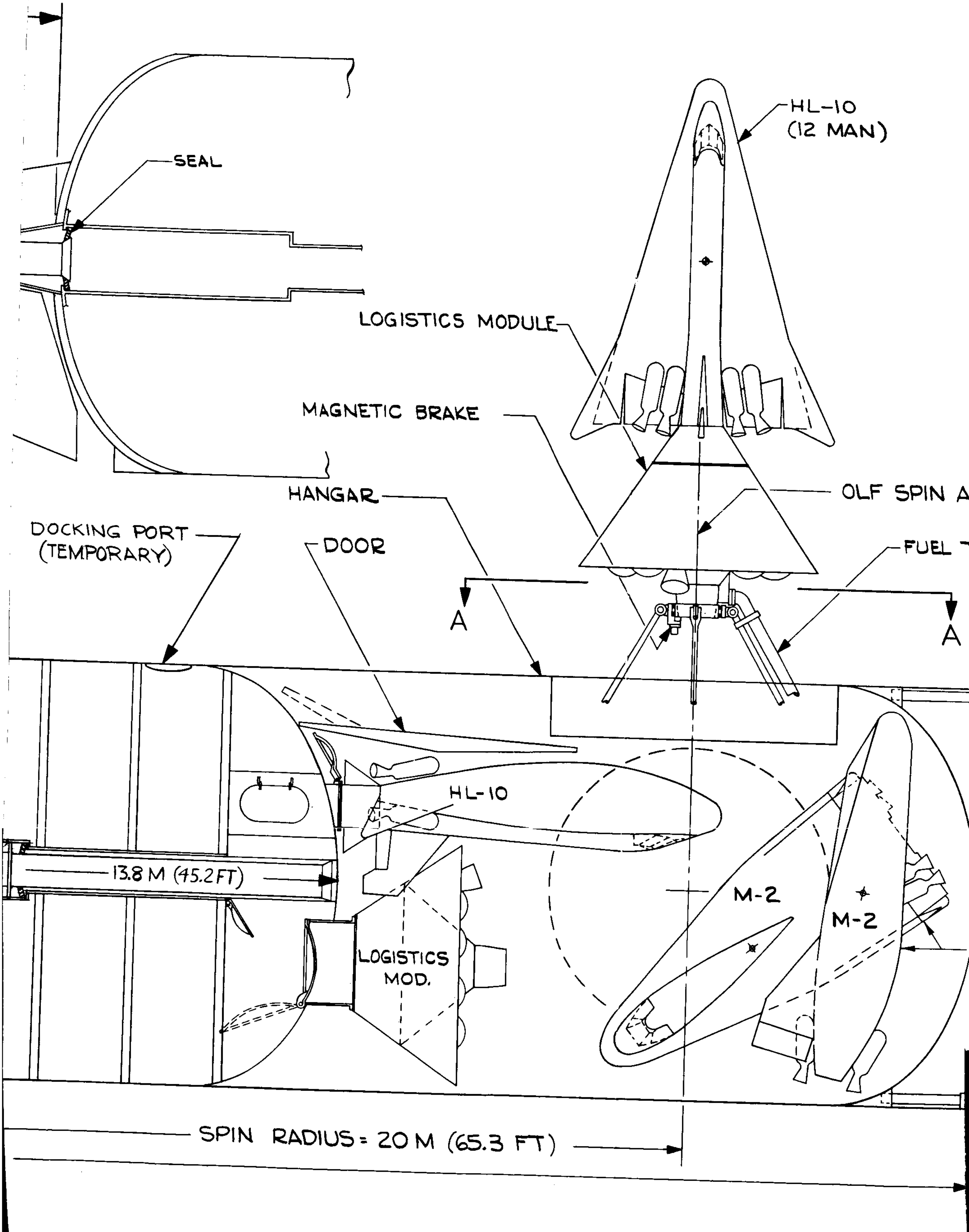
SEAL
HL-10
(12 MAN)
LOGISTICS MODULE
MAGNETIC BRAKE
HANGAR
OLF SPIN A
DOCKING PORT
(TEMPORARY)
DOOR
FUEL T
A
A
HL-10
13.8 M (45.2 FT)
M-2
M-2
LOGISTICS
MOD.
SPIN RADIUS = 20 M (65.3 FT)

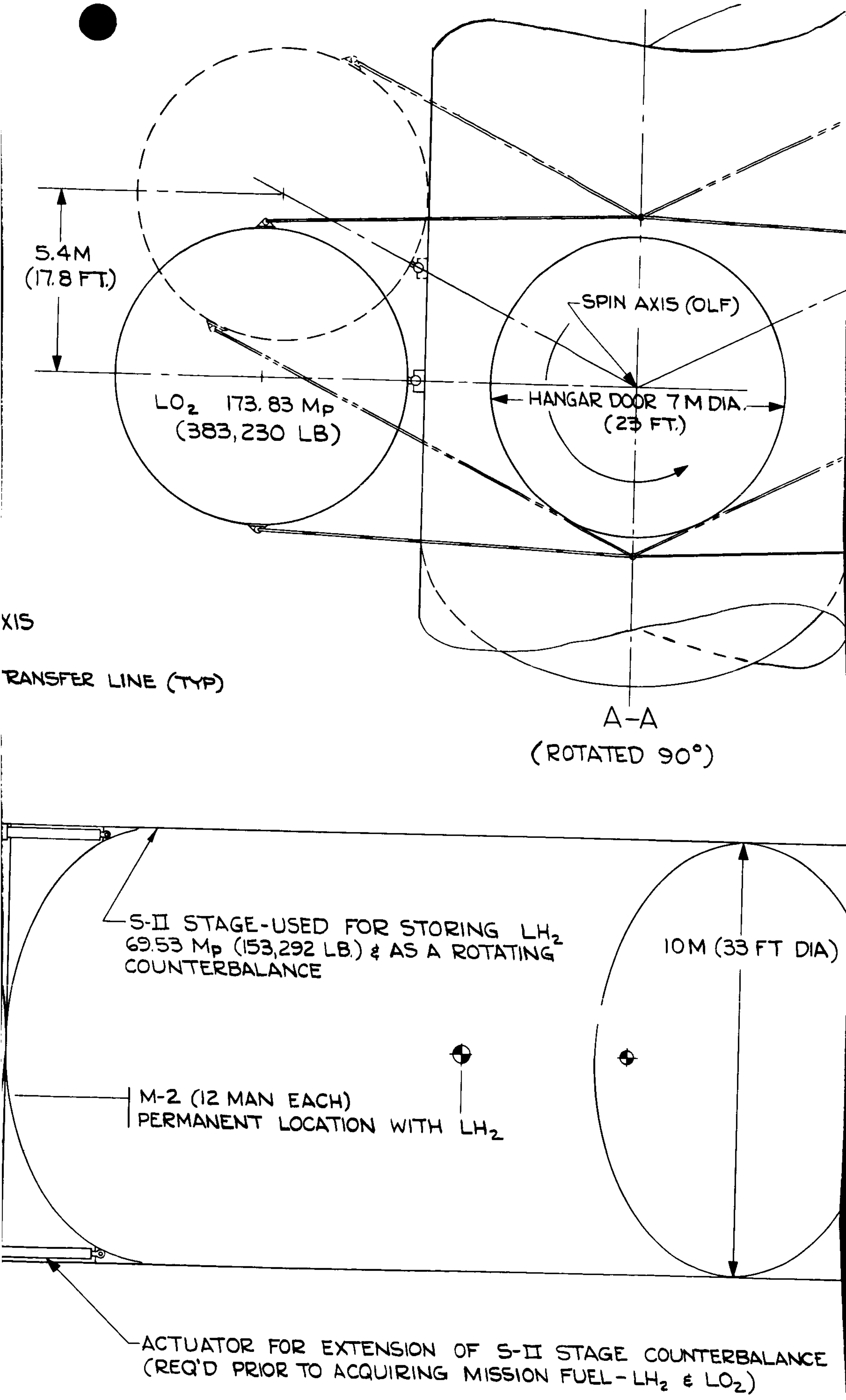
5.4M
(17.8 FT.)
LO2 173.83 Mp
(383,230 LB)
SPIN AXIS (OLF)
HANGAR DOOR 7 M DIA.
(23 FT.)
XIS
RANSFER LINE (TYP)
A–A
(ROTATED 90°)
S-II STAGE-USED FOR STORING LH2
69.53 Mp (153,292 LB.) & AS A ROTATING COUNTERBALANCE
10M (33 FT DIA)
M-2 (12 MAN EACH)
PERMANENT LOCATION WITH LH2
ACTUATOR FOR EXTENSION OF S-II STAGE COUNTERBALANCE
(REQ'D PRIOR TO ACQUIRING MISSION FUEL – LH2 & LO2)

4

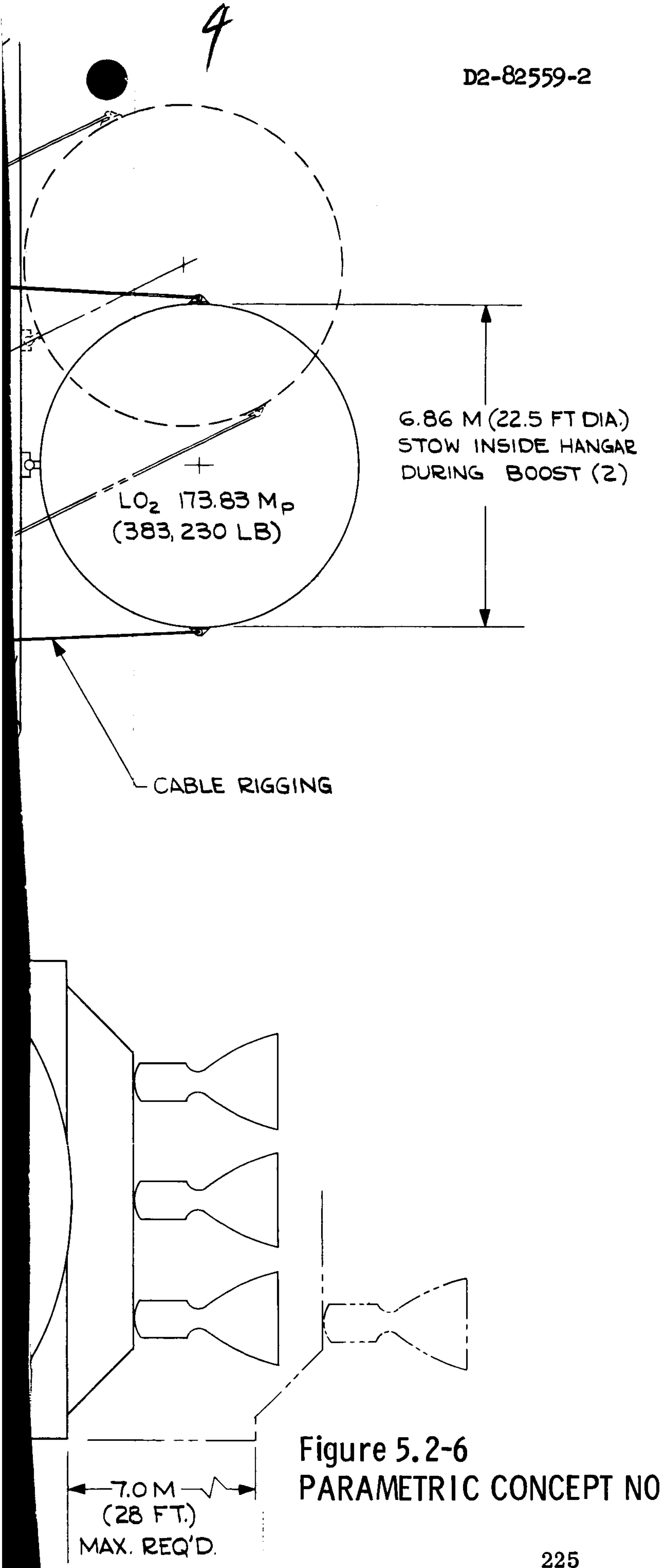

Figure 5.2-6
PARAMETRIC CONCEPT NO. 4

crew members. Boom supporting guy wires are arranged so that they are automatically deployed and become taut when the boom reaches full extension. Similarly 79 M^2(850 sq.ft.) of radiators are erected by extension of the boom. During boost, the radiators are stowed flat across the 10 M (33 ft.) diameter. The radiator base is hinge mounted to this diameter, positioned so that one edge of the radiator is tangent to the outside surface of the boom. Erected, the three radiator panels are 120 degrees apart and present only an edge view to the facility. The radiator is arranged so that it lies within the shadow cast by the shield of the nuclear reactor. The exterior mounted oxygen tanks also fall inside this shadow.

The auxiliary shield between the two reactors is employed to prevent neutronic decoupling of the two cores. The standby reactor is to be used only in case of failure of the other; valving operations are required so that either reactor can utilize the one radiator. In the direction of the facility, the one shadow shield serves both reactors. However, in the direction of an approaching vehicle, each reactor has a separate shadow shield.

The S-II counterbalance will have to be extended approximately 1.51 M (5 ft.) farther than with the solar panel configuration, but this does not present any special problem. The change could also be accomplished by shifting the mission fuel tanks if they are included aboard the facility. With this counterbalance capability, reactor boom extensions of 30.5 M (100 ft.) or more can be considered along with multiple telescopic sections of the boom.

5.2.2.6 Parametric Concept Number 5. - This concept differs from the baseline in that it is designed for zero "g" operation and has no provision for artificial gravity capability. The concept appears much like the baseline as is shown in Figure 5.2-7, except that the spent S-II stage is not retained. This simplifies the concept in some respects. For example, the S-II stage actuator system for balancing the configuration about the spin axis is no longer required, nor is the rotatable docking port, which permits vehicles to dock while the facility is in artificial gravity mode. In fact, the docking port has been moved to the end of the hangar, which somewhat simplifies the hangar design. A possible added requirement, however, is a centrifuge for crew conditioning if this is found to be necessary.

The balance of the facility is essentially the same as the baseline concept. The crew and facilities compartment is the same, as are the solar panel display and LOX tank provisions.

5.2.2.7 Parametric Concept Number 6. - This concept differs from the baseline in that no hangar has been provided. Elimination of the hangar gives the facility a markedly different appearance from the baseline. Several changes are apparent. For example, logistics-type vehicles, which dock at the OLF, will stay at the docking port rather than being moved into a hangar as on the baseline. To accommodate a number of such vehicles, a total of four docking ports are provided at the facility, although only two of them can be located on the spin axis of the facility. The actuator system for extension of the spent S-II stage to permit balancing about the spin axis must also be changed since the S-II stage is no longer mounted off the large diameter hangar structure, but instead is supported by a relatively small tubular section. The details of the LOX tank installation

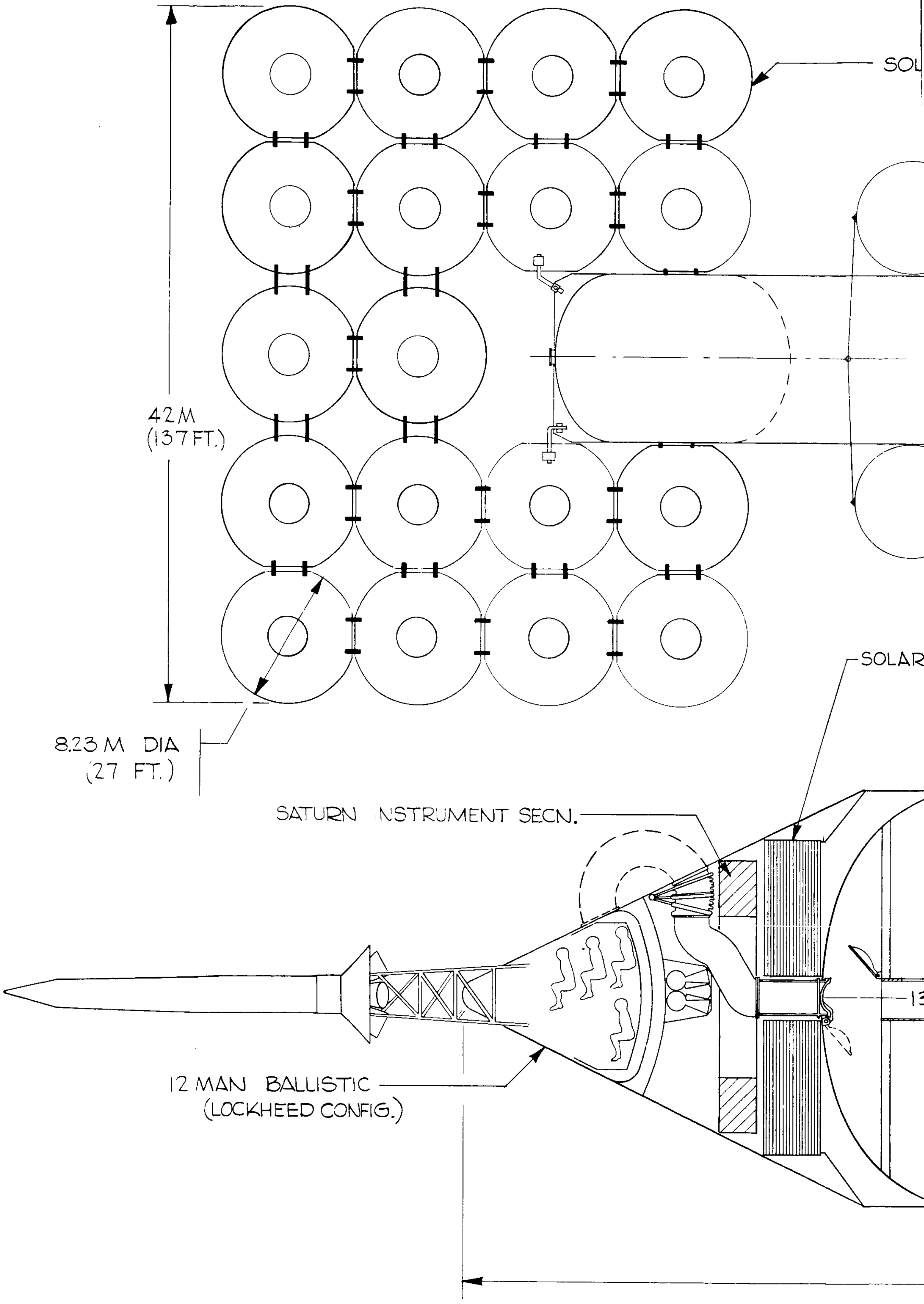
SOL
42 M
(137 FT.)
8.23 M DIA
(27 FT.)
SOLAR
SATURN INSTRUMENT SECN.
13
12 MAN BALLISTIC
(LOCKHEED CONFIG.)

2

AR PANELS DEPLOYED 929 M^2 (10,000 FT^2)

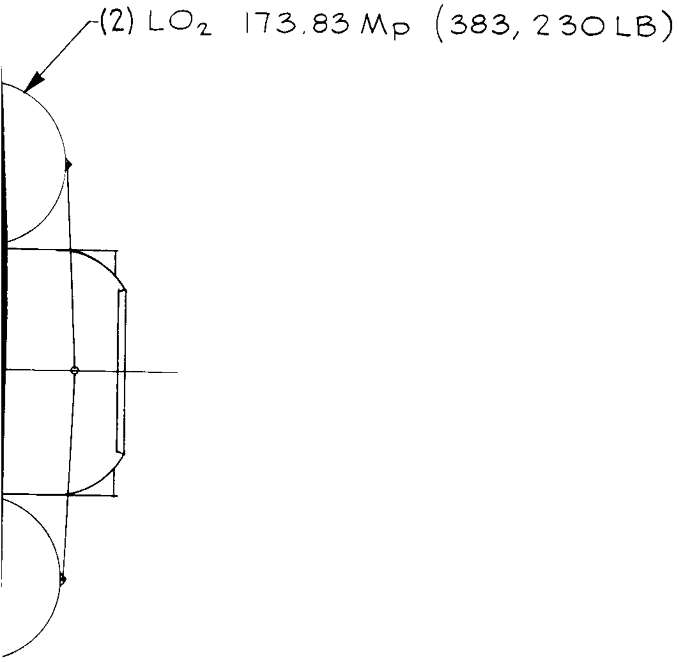

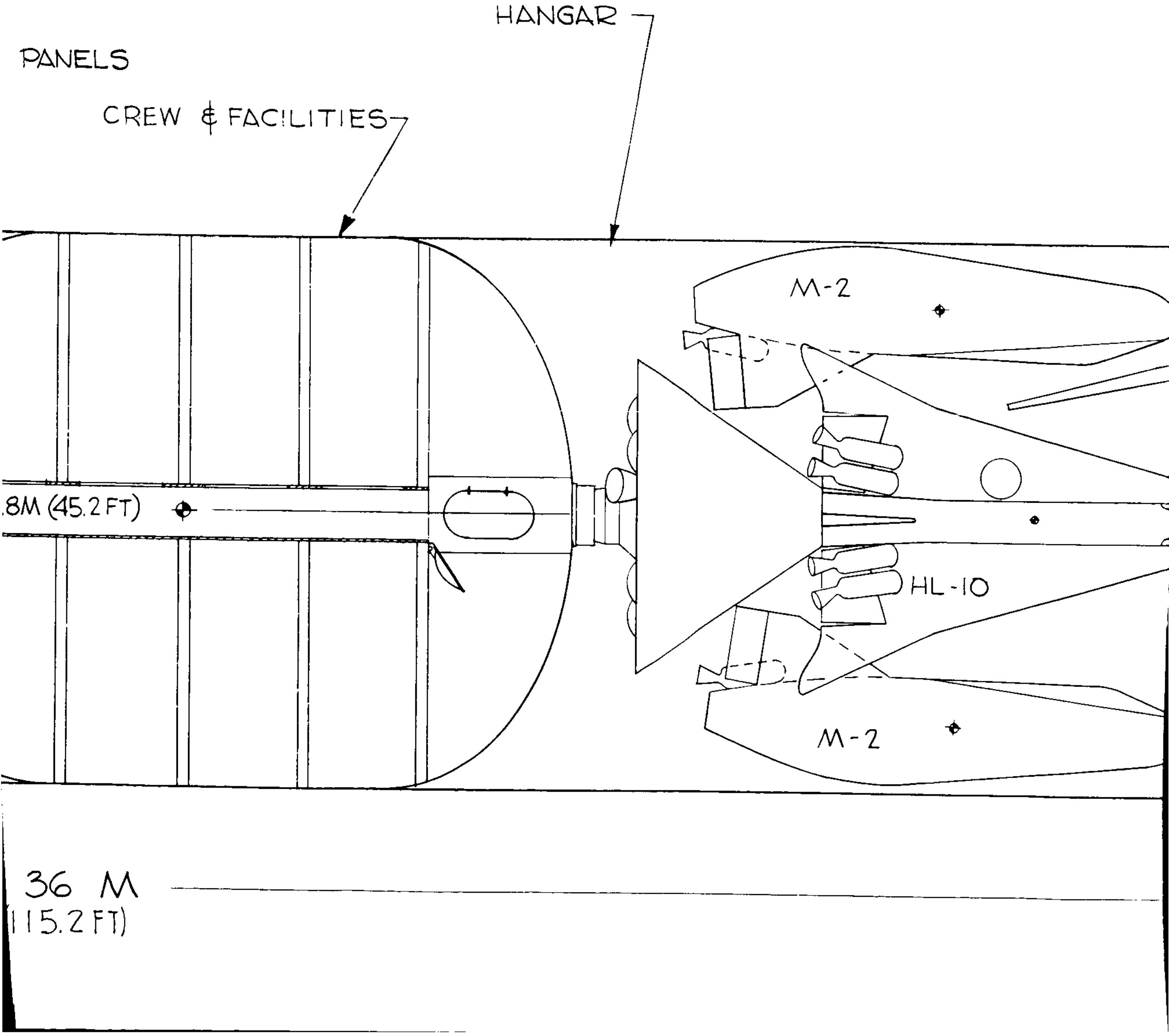

3

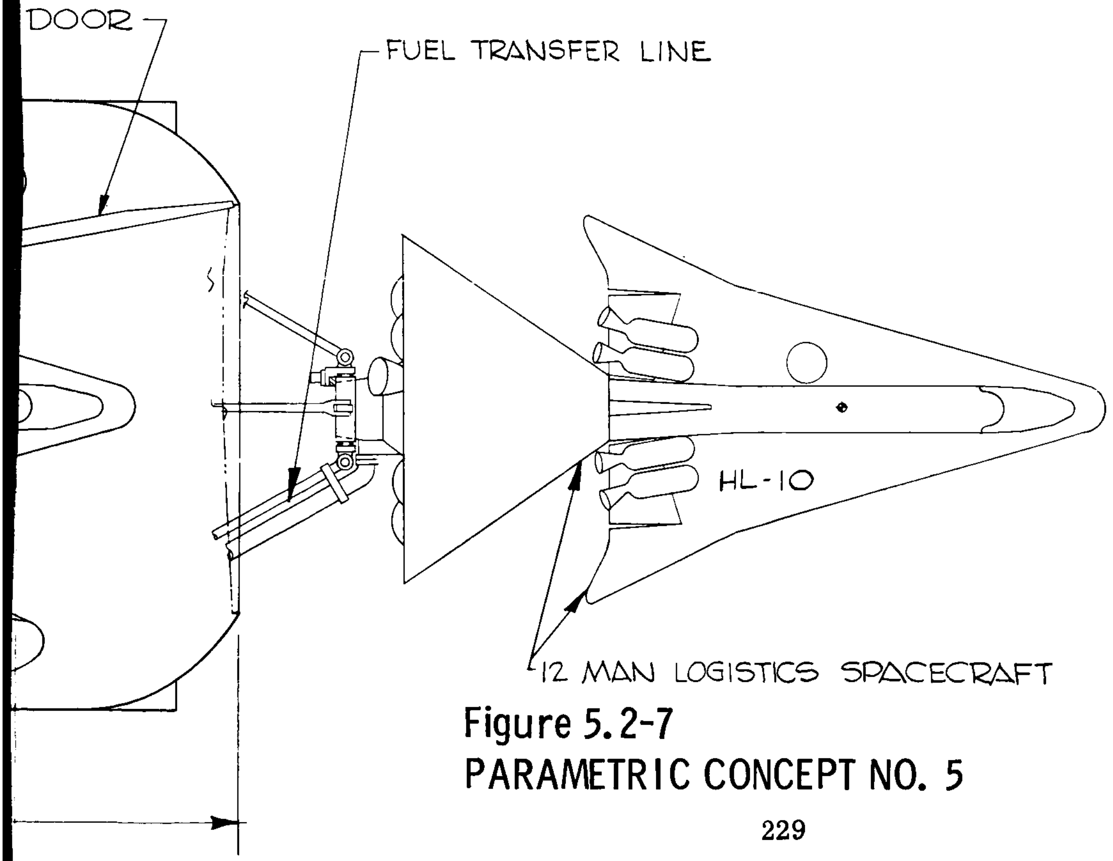

Figure 5.2-7
PARAMETRIC CONCEPT NO. 5

were not worked out for the concept. It does appear, however, that it might be undesirable to provide integral LOX tankage for the OLV at the OLF, since a hangar is not available in which to locate the LOX tanks during the Earth launch as is the case with the baseline concept. The details of the launch configuration have not been worked out for this concept, however, a shroud structure must cover the space between the crew and equipment module and the spent S-II stage. In order to keep the shroud as short as possible, it is necessary that the OLF tubular section, supporting the docking ports, be designed to be retractable into as short a length as possible at launch.

The crew and facility module and solar panel display remains the same as the baseline concept and the spent S-II stage remains as a counterbalance for the spinning artificial "g" mode. No configuration drawing was made of this concept.

5.2.2.8 Parametric Concept Number 7. - This concept varies from the baseline only in that the facility does not include an integral OLV LOX supply at the OLF. This means that this concept does not require as part of its regular equipment the spherical LOX tanks shown in the baseline, the deployment equipment for positioning them for artificial gravity operation, nor the structural provisions in the hangars for tank support during launch. The balance of the concept is identical to the baseline. No configuration drawing was made of this concept.

5.2.2.9 Parametric Concept Number 8. - This concept was not a variation of the baseline concept, but was one of several which investigated the feasibility of developing the initial OLF through an ORL evolution. In concept 8, 3.05 M (120 in.) diameter modules were used as the basic unit about which the design was developed. In this concept the OLF requirements were met by a sufficient number of individually orbiting units properly equipped to meet these requirements. The major module functions were checkout operations which required three modules, living quarters and miscellaneous operations requiring five modules, and spares storage requiring two modules, for a total requirement of ten modules. Figure 5.2-8 shows a typical module with a chart summarizing major specifications of the ten modules. To provide emergency escape capability for the crew, one Gemini is boosted with and remains attached to each MORL. No provision was made for artificial gravity in this concept. Orbit keeping is accomplished by each unit. The units will not attach, but will stay close to each other. The volumetric allotment for man and his personal equipment was only slightly reduced, from 22 M^3 (775 $ft.^3$) in concept 1 to 20 M^3 (704 $ft.^3$). As mentioned, three modules (numbers 1, 2, & 3) are assigned the checkout function. The checkout equipment mass was increased 50% to allow for the inefficiency of being contained in three modules instead of one. Likewise, checkout electrical power requirements were increased 50%. The primary on-board power systems used solar panels, although mass allowances were made for auxiliary power units to supply the tabulated checkout power levels over and above the solar panel capabilities, which also are noted. The auxiliary power units were used in lieu of solar panels for the checkout requirements because the power demand is infrequent and because installation of additional solar panels does not appear feasible on this design. As may be noted in the chart the checkout modules are designed to accommodate a total of 10 men during checkout operations. This was considered adequate to accomplish the checkout of the OLV. Note on thedrawing that a docking port has been provided on the side of the module. This will accommodate an Apollo logistics vehicle.

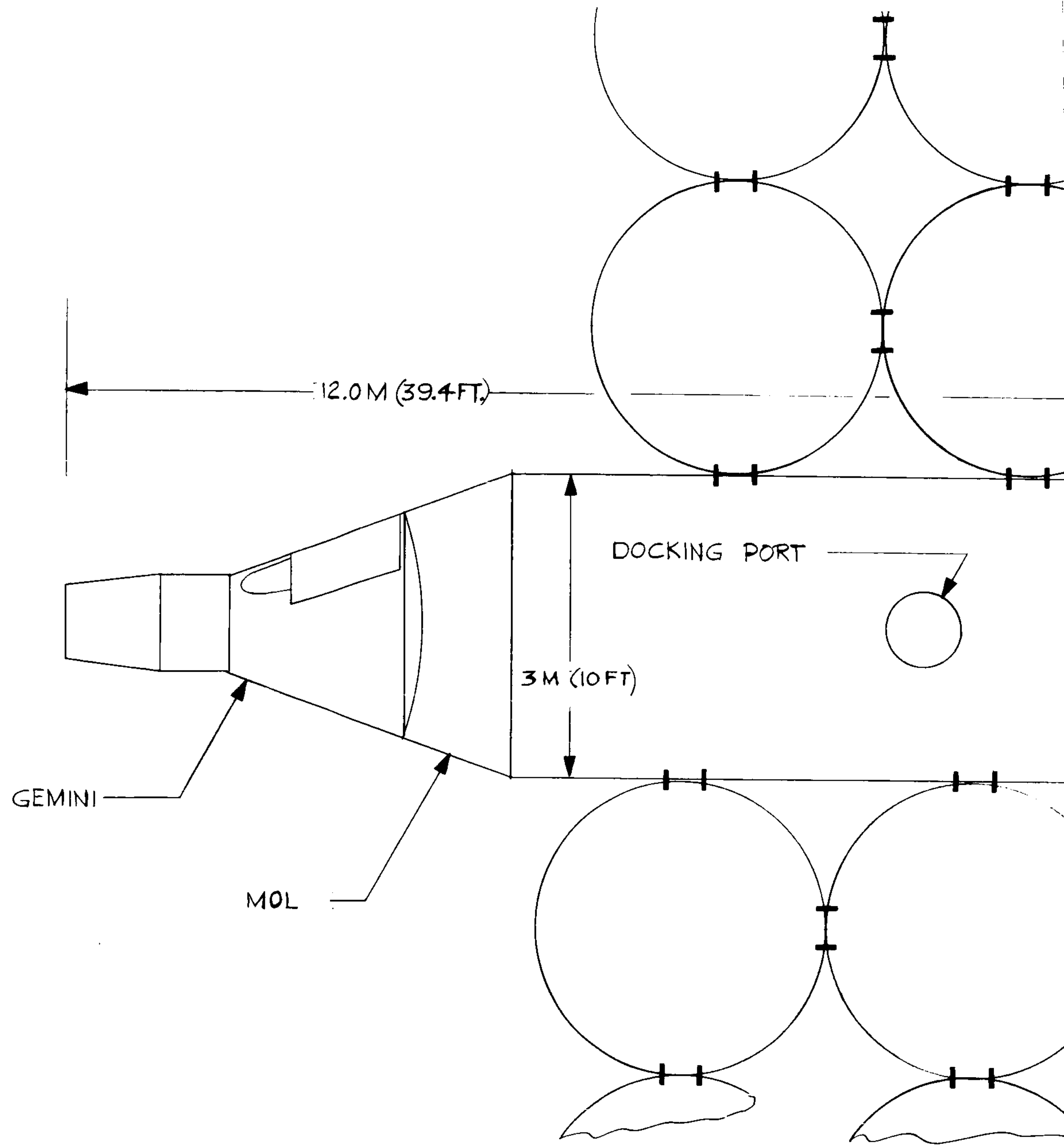

MODULE FUNCTION ►	CHECKOUT			LIVING & MISC. OPER.					SPARES	
MODULE NUMBER ►	1	2	3	4	5	6	7	8	9	10
SUBSYSTEM ▼										
ENVIRONMENT CONT. (NO. OF MEN PER MODULE)	▷1	▷2	▷2	2	2	2	2	2	0	0
CHECK-OUT EQUIP. WT. #	2000	500	500	0	0	0	0	0	0	0
CHECK-OUT ELECTRICAL POWER (TWO 24 HR PERIODS)	2.6 K.W.	.7 KW	.7 KW	0	0	0	0	0	0	0
SOLAR PANEL AREA~FT² (CONTINUOUS POWER~KW)	1370 3.3	1370 3.3	1370 3.3	1245 3.0	1245 3.0	1245 3.0	1245 3.0	1245 3.0	▷4 .50	▷4 .50
ATTITUDE CONTROL + ORBIT KEEPING	✓	✓	✓	✓	✓	✓	✓	✓	✓ ▷3	✓ ▷3
COMMUNICATIONS POWER ~ WATTS	300	300	300	50	50	50	50	50	50	50

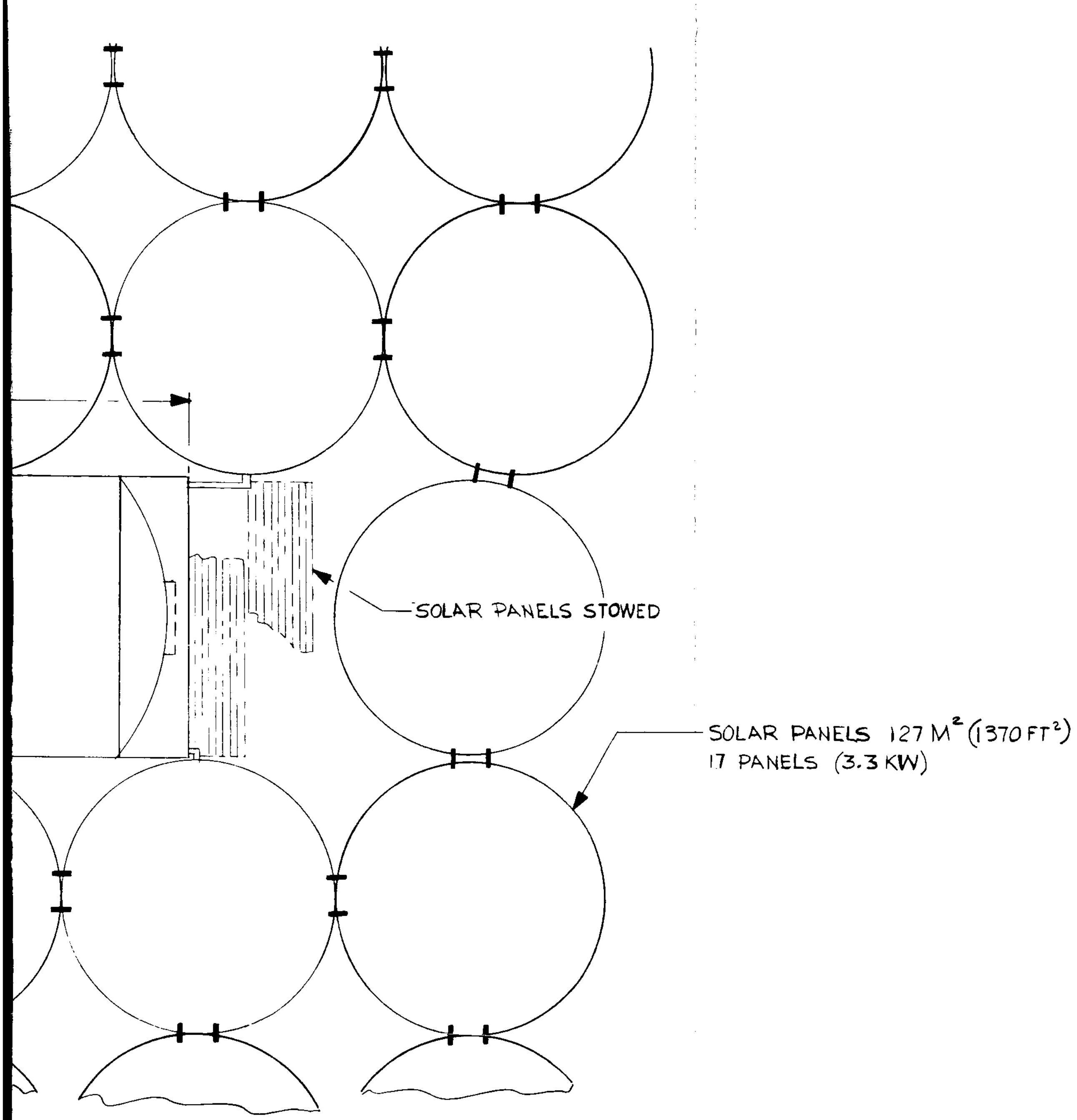

1▷ DESIGN FOR 2MEN CONTINUOUS DUTY &
4MEN FOR TWO 24HOUR PERIODS
2▷ DESIGN FOR 2MEN CONTINUOUS DUTY &
3MEN FOR TWO 24 HOUR PERIODS
3▷ ENERGIZED ONLY FOR DOCKING & AS COMMANDED
4▷ USE ISOTOPE POWER SUPPLY

Figure 5.2-8
PARAMETRIC CONCEPT NO. 8

#2

Five modules (numbers 4 through 8) are used for living quarters and miscellaneous operations. Since they carry no checkout gear, their power level and solar panel area is proportionately reduced. Two modules are used for spares. These modules use isotope power as indicated by flag note number four. They are unmanned and will not be attitude stabilized except when commanded for docking or orbit keeping operations.

5.2.2.10 Parametric Concept Number 9. - This concept was much like number 8 in principle in that it was developed as an ORL evolution and the modules were in individual orbit. They were in sufficient quantity and properly equipped to accomplish the OLF mission. In this case, however, the 6.63 M (260 in.) diameter MORL module was used. This allowed the OLF 18-man operation to be accomplished with only three modules; one for checkout operations, one for miscellaneous, and one primarily for spares. Figure 5.2-9 shows a drawing of a representative MORL module as modified for the OLF application. The drawing is typical for both concepts 9 and 10 with a separate table of design characteristics for each concept.

Concept 9 is designed to house 18 men on a continuous basis, 7 men each in modules 1 and 2, with 4 aboard module 3. Module 1, the checkout module, is designed to house 9 men on a temporary basis when checkout operations are being conducted.

Solar panels were selected as the primary source of on-board power with the checkout module requiring the greatest solar panel area.

Space was provided in the third module for 85.4 M^3 (3,000 cu.ft.) of spares. A minimum space allowance of 19.9 M^3 (700 cu. ft.) was provided for each crewman and equipment. Each of the modules provided a centrifuge for crew gravitational conditioning, but no provision was built into the system for an artificial gravity capability.

5.2.2.11 Parametric Concept Number 10. - This concept utilizes the same MORL modules as concept number 9, shown on Figure 5.2-9. As in concepts 8 and 9, the modules are assumed to be individually in orbit. The prime object of this concept and the main difference from concept number 9, is that a redundancy was built in such that any single module could be lost and the OLF checkout mission could still be completed.

Since three modules were required for concept 9, it was assumed that proper loading of four modules would provide system redundancy to the extent that the loss of one module would not prevent the checkout mission from being successfully completed. Several assumptions were made to provide ground rules upon which to base the design:

- Assign personnel among the four modules such that the loss of any module leaves at least 18 men aboard the three remaining modules

- Design for temporary occupancy of 9 crewmen aboard each checkout module during checkout operations

- Provide complete checkout facilities and equipment aboard each of two modules

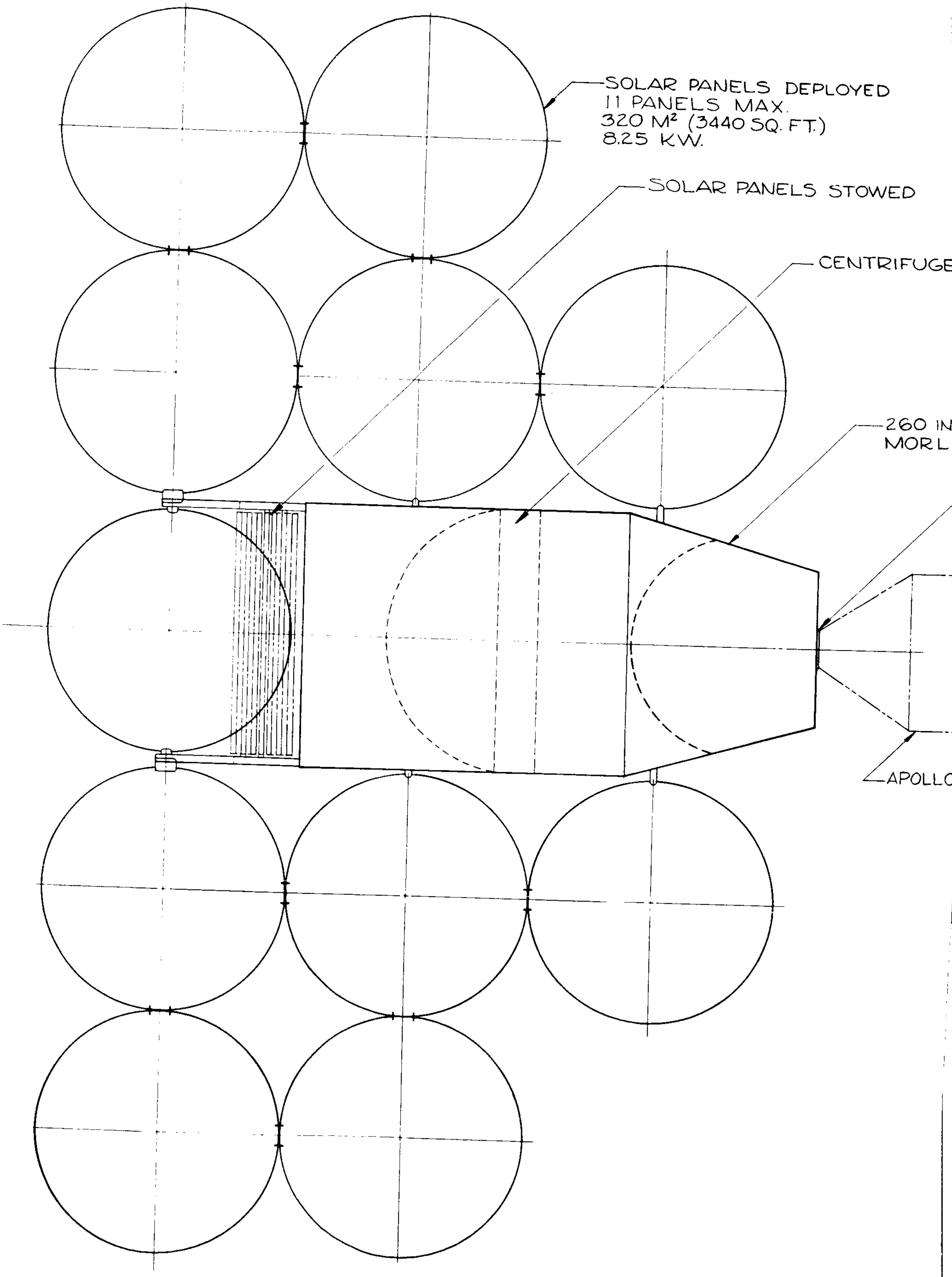
SOLAR PANELS DEPLOYED
11 PANELS MAX.
320 M² (3440 SQ. FT.)
8.25 KW.
SOLAR PANELS STOWED
CENTRIFUGE
260 IN
MORL
APOLLO

#1

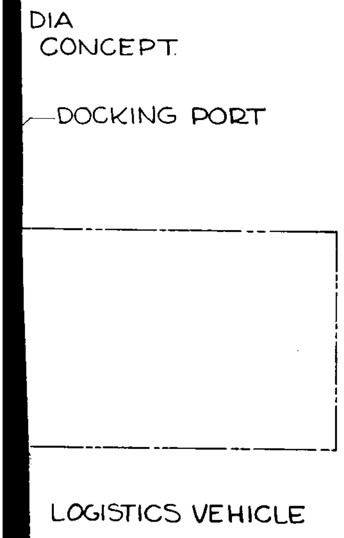

CONCEPT 9-SPECIALIZED MORL

		PRIMARY MODULE FUNCTION		
		CHECKOUT	MISC.	SPARES
MODULE NO.		1	2	3
CREWMEN PER MODULE	PERMANENT	7	7	4
	TEMPORARY	9	7	4
CHECKOUT EQUIPMENT		YES	NO	NO
ELECTRICAL POWER REQMTS-WATTS	CHECKOUT	2.6	—	—
	CONTINUOUS	5.35	4.20	2.45
	COMMUNICATION	.30	.10	.10
SOLAR PANEL AREA-SQ.FT.		3437	1792	1063
ATTITUDE CONTROL & STATION KEEPING		YES	YES	YES
SPARES VOLUME-CU. FT.		—	—	3000
CENTRIFUGE		YES	YES	YES

CONCEPT 10-REDUNDANT MORL

		PRIMARY MODULE FUNCTION			
		CHECKOUT		MISC. & SPARES	
MODULE NO		1	2	3	4
CREWMEN PER MODULE	PERMANENT	8	8	6	5
	TEMPORARY	9	9	6	5
CHECKOUT EQUIPMENT		YES	YES	NO	NO
ELECTRICAL POWER REQMTS-WATTS	CHECKOUT	2.60	2.60	—	—
	CONTINUOUS	5.35	5.35	3.55	3.00
	COMMUNICATION	.30	.30	.10	.10
SOLAR PANEL AREA-SQ. FT.		3437	3437	1520	1291
ATTITUDE CONTROL & STATION KEEPING		YES	YES	YES	YES
SPARES VOLUME-CU. FT.		—	—	1500	2500
CENTRIFUGE		YES	YES	YES	YES

Figure 5.2-9
PARAMETRIC CONCEPT NO. 9 & 10

#2

Provide redundancy of spares aboard at least two modules

With the above ground rules in mind, four MORL modules were provided for concept 10, with the major design parameters shown in the table on Figure 5.2-9. Modules 1 and 2 each have complete checkout equipment aboard and house eight crewment permanently, with temporary system capability for a total of nine crewmen during the checkout operation. The added crewman on each of modules 1 and 2 is transferred over from modules 3 and 4 for checkout operations. Modules 3 and 4 are primarily for spares and miscellaneous equipment and operations as well as additional crew housing. Six crewmen are permanently assigned to module 3 and five crewmen to module 4, while during checkout operations this is reduced to five and four crewmen respectively. The spares requirements were assumed to be 85.4 M^3 (3000 ft.^{3}) for the nonredundant system (concept 9). This was arbitrarily increased to 113 M^3 (4000 ft.^{3}) for the redundant concept of which 42.4 M^3 (1500 ft.^{3}) were placed aboard module 3, and 71 M^3 (2500 ft.^{3}) aboard module 4.

Thus, it can be seen that even with a complete loss of any single module that the system still provides a spares inventory, at least 18 total crewmen, at least 9 checkout crewmen, and at least one complete checkout module and is able to complete OLV checkout operations.

5.2.2.12 Parametric Concept Number 11. - This concept also utilized MORL modules, but instead of the modules being individually in orbit as with concepts 9 and 10, they were used as building blocks to make up an integrated OLF design as shown in Figure 5.2-10.

The concept utilizes a modular approach to building the facility, in which the external geometry of the existing MORL concept is adapted to the OLF application. Two of these modules are used to house 18 men and two additional modules are tailored to house the estimated 20,800 kg (46,000 lbs.) of spare parts for the facility and mission vehicle. Tailoring in this case consists of omitting the cylindrical center section, since the entire volume is not required to meet the packaging density of 6.8 kg (15 lbs.) per cubic foot, which assures accessibility to all spare parts stored therein. All four modules in this concept have eliminated the cylindrical skirt section that normally extends from the crew living quarters compartment of the MORL.

Sequentially, a MORL crew module is first placed into the desired orbit. The unit is unmanned and carries its own attitude control system. This system is made large enough to serve as a redundant supply for the entire complex. Other than for attitude stabilization, there is no propulsion system aboard this unit.

The second launch consists of nine men in a logistics-type capsule together with 10,400 kg (23,000 lbs.) of spares located in the tailored MORL module. This comprises a single shot for the Saturn IB vehicle and Saturn S-IVB stages. The propulsion unit for orbital rendezvous is a part of this system. Storable propellants are used. Attitude stabilization fuel is housed in the same tankage. This unit is then rendezvoused with the unmanned crew module, at which time the crew can move from the logistics-type capsule into its permanent quarters. The propulsion engine then swings to point through the newly formed center of gravity to perform the rendezvous maneuver with a like pair of units which have meanwhile

1

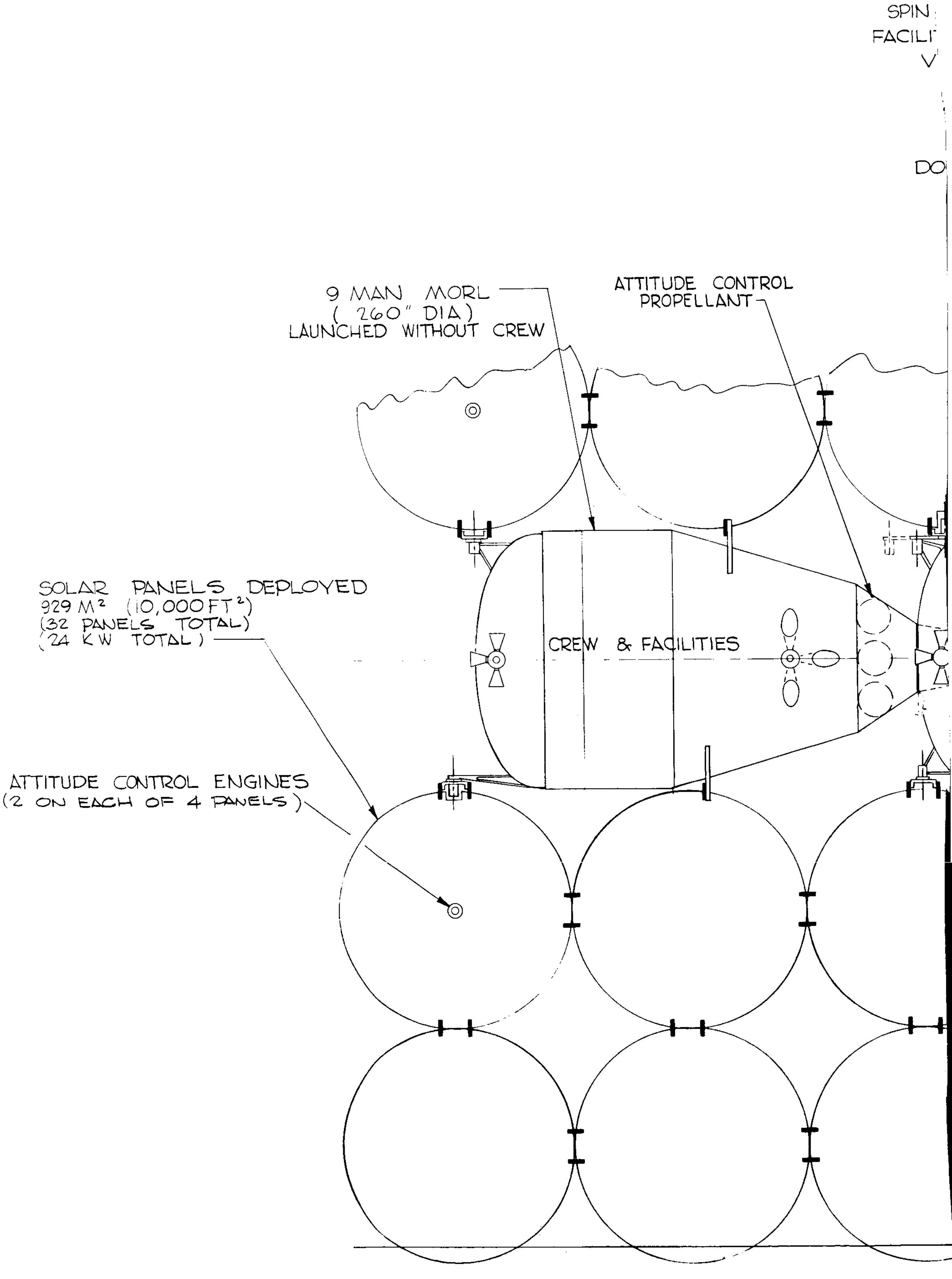
SPIN
FACILI
DO
9 MAN MORL
(260" DIA)
LAUNCHED WITHOUT CREW
ATTITUDE CONTROL
PROPELLANT
SOLAR PANELS DEPLOYED
929 M² (10,000 FT²)
(32 PANELS TOTAL)
(24 KW TOTAL)
CREW & FACILITIES
ATTITUDE CONTROL ENGINES
(2 ON EACH OF 4 PANELS)

2

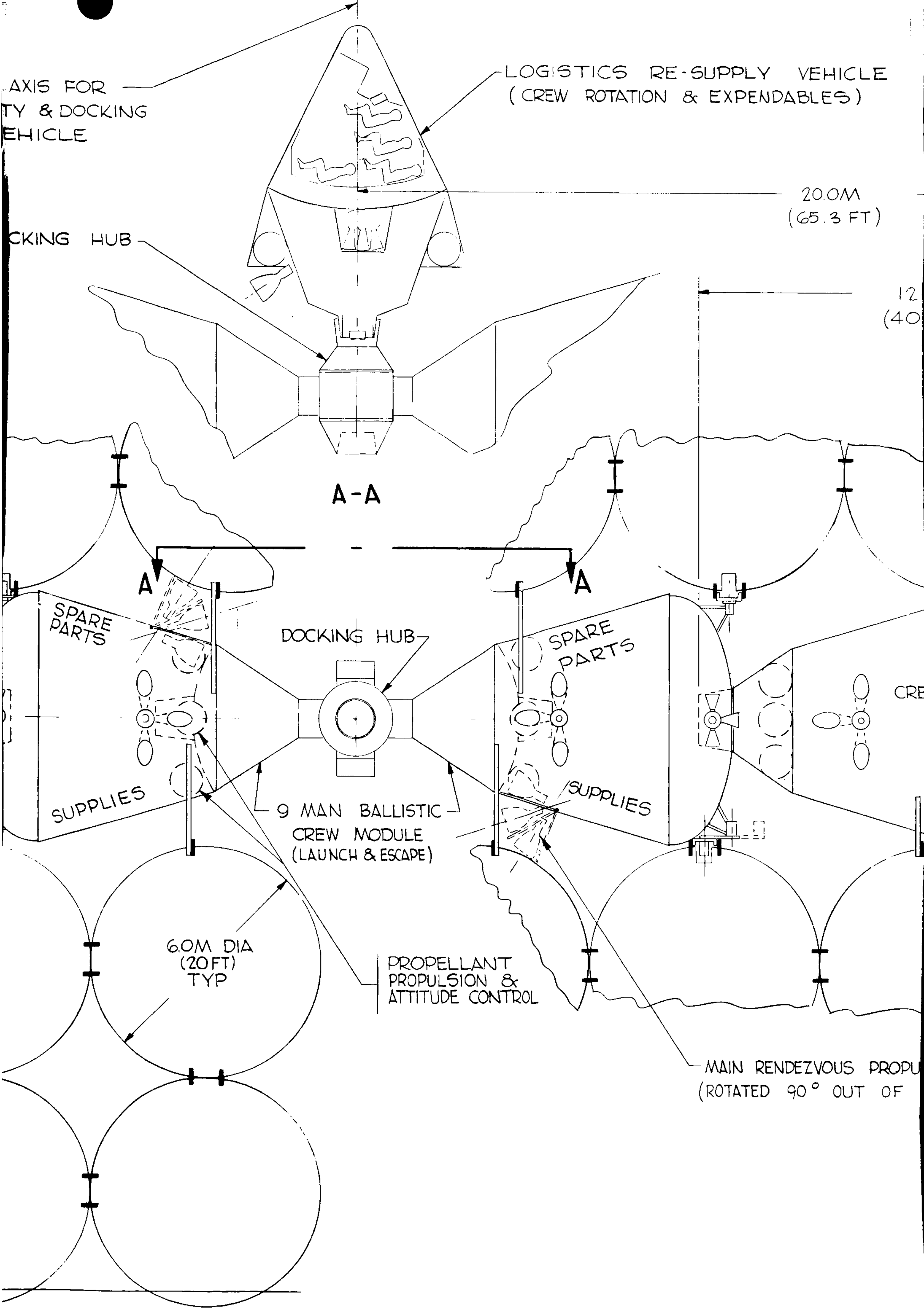
AXIS FOR
TY & DOCKING
EHICLE
LOGISTICS RE-SUPPLY VEHICLE
(CREW ROTATION & EXPENDABLES)
20.0M
(65.3 FT)
CKING HUB
12
(40
A-A
A
A
SPARE PARTS
DOCKING HUB
SPARE PARTS
CRE
SUPPLIES
9 MAN BALLISTIC
CREW MODULE
(LAUNCH & ESCAPE)
SUPPLIES
6.0M DIA
(20 FT)
TYP
PROPELLANT
PROPULSION &
ATTITUDE CONTROL
MAIN RENDEZVOUS PROPU
(ROTATED 90° OUT OF

3

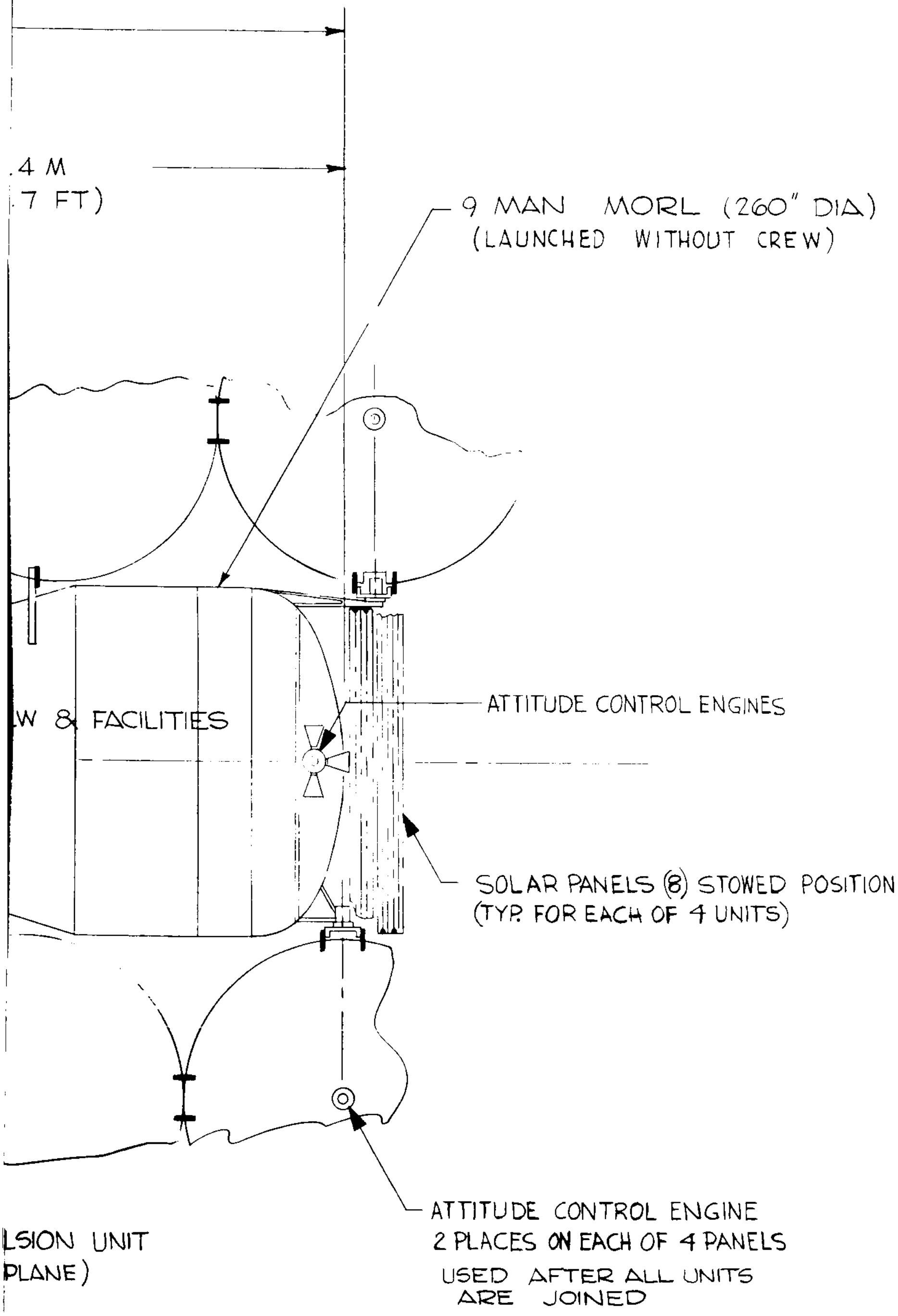

Figure 5.2-10 PARAMETRIC NO. 11

been orbited by the third and fourth launches and subsequently joined together. Since there are two separate units equipped with propulsion engines, there is redundant capability for performing the final rendezvous maneuver.

Completely assembled, the facility is spun to provide artificial gravity. The crew compartments are at the 20 M (65 ft.) radius and provide 0.2_g to 0.3_g at 4 rpm.

Eight solar panels, 6.7 M each (22 ft.) in diameter are stowed across the diameter at the aft end of each unit. Automatic panel deployment is also provided on each unit; this provides 6 kW independently -- and 24 kW after all rendezvous maneuvers are completed. The panels will be rotated 90 degrees just prior to docking any two units to prevent possible panel damage. This motion is also required for panel deployment, hence does not penalize the system.

The docking hub is located aft on one of the tailored MORL modules with the solar panels during boost and is manually placed on the front of the logistics-type capsule after orbit is established and prior to orbital assembly of the modules. The hub has six docking ports for growth capability. Logistics support vehicles may dock while the facility is rotating, just as with the baseline concept. A maintenance vehicle may be kept opposite the logistic docking port. The two docking ports remaining in the plane of rotation can accommodate the two oxygen tanks for the Mars mission fuel if this is desired. This would constitute a "4-spoke" configuration, just as in the baseline concept. Hydrogen for the OLV will not be stored at this facility.

This configuration could be modified to accommodate a hangar if desired. An enlarged lengthened cylindrical section with docking ports would replace the hub section and would furnish hangar space.

5.2.2.13 Parametric Concept Number 12. - The final concept considered during the parametric study was very similar to the baseline concept, except that a checkout manifold tower was attached to the OLF to provide service to the OLV. Figure 5.2-11 shows the concept with the OLV docked to it and the checkout manifold tower in position. The checkout boom and manifold are hinged to the outside of the facility. After the OLV is docked, the boom swings outward from the OLF to a position of physical contact with mating service pads on the side of the OLV, as shown by the drawing. The boom would be stowed beneath a fairing during Earth launch. The central docking port on the OLF has been enlarged (from concept 1) to be compatible with the OLV. It is expected that a physical connection between the OLF and the OLV will provide for a more reliable checkout procedure than would be possible by remote means. It will not be necessary for the checkout crew to leave the facility during orbital launch operations and it should be possible to simplify the design of the checkout equipment with direct wire connections between OLF and OLV. Direct docking in this manner also eliminates the requirement for OSE to transfer crew members. In addition to checkout, the boom further provides all the servicing functions required of the OLV, such as replenishment of fluid supplies for its attitude control system, environmental control system, and transtage. This capability also eliminates the need for separate OSE to perform these functions. The requirement for separate orbit keeping also is eliminated.

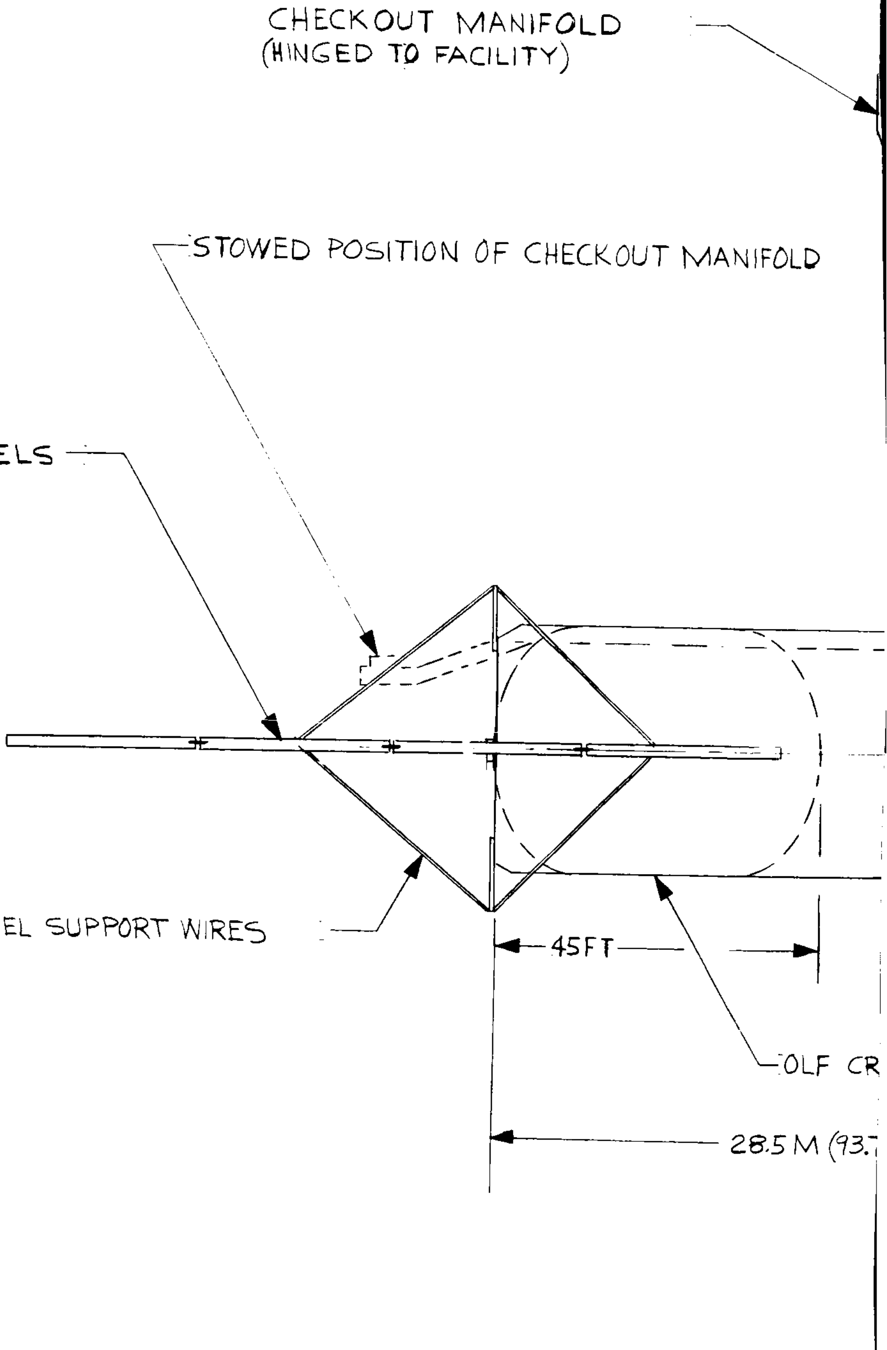
CHECKOUT MANIFOLD
(HINGED TO FACILITY)
STOWED POSITION OF CHECKOUT MANIFOLD
SOLAR PANELS
PANEL SUPPORT WIRES
45FT
OLF CR
28.5 M (93.

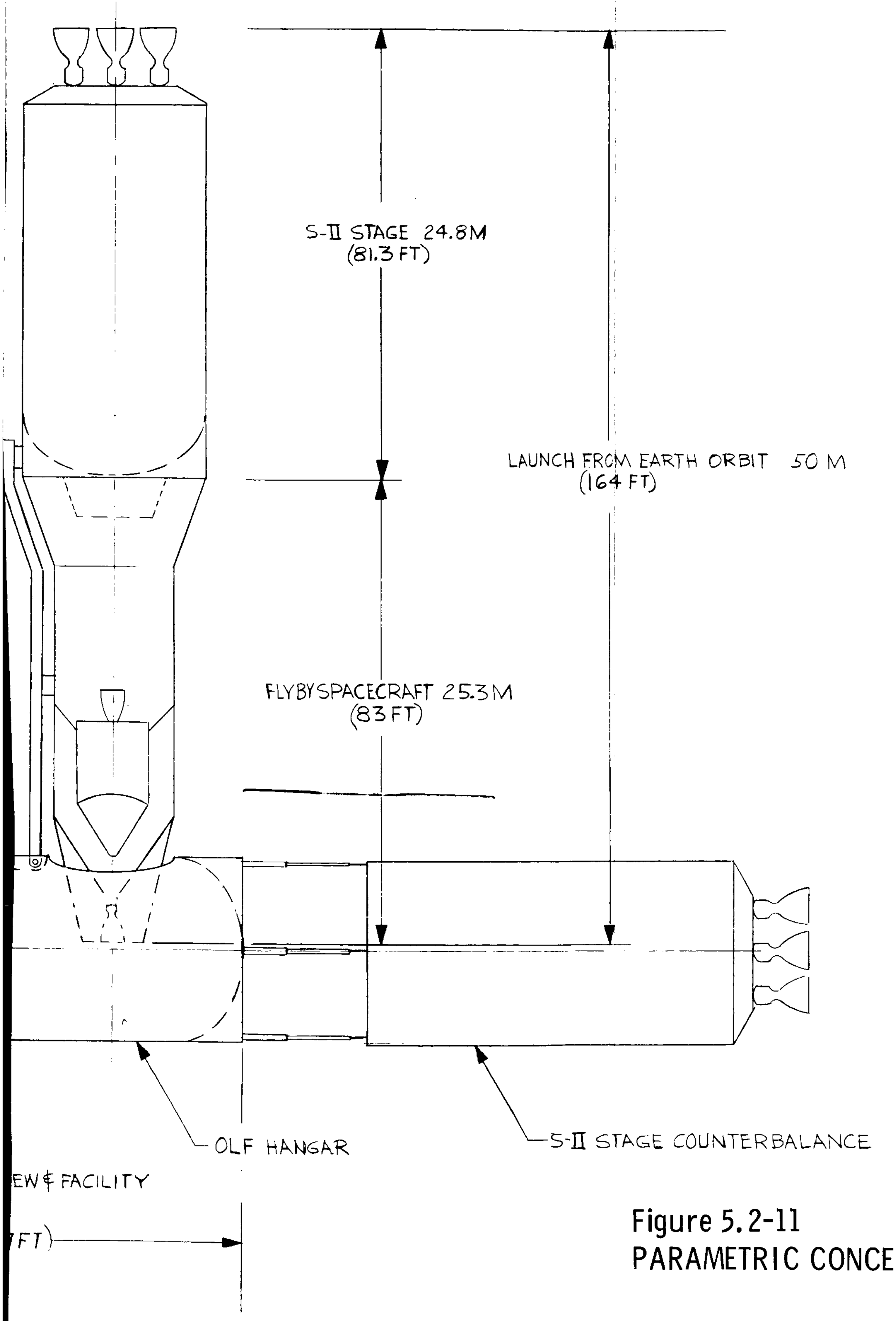

Figure 5.2-11
PARAMETRIC CONCEPT NO. 12

#2

5.2.3 Concept Evaluation. - It was necessary to evaluate the parametric concepts in such a way that it would be possible to confidently select one of the concepts or develop a compromise concept for further detail design study. As mentioned earlier in this report, however, the scope of the study did not permit the parametric study to delve deeply into design details of the various concepts, but was limited to a configuration exercise in which gross design parameters which had a relatively large effect on operational mode, size, shape, or appearance were investigated. It was therefore not felt that a precise quantitative evaluation could be made of the various concepts with any real degree of confidence. It was felt, however, that a qualitative evaluation could be made of various factors on a comparative basis, where the concept was simply rated as favorable, neutral, or unfavorable in the particular parameter being considered in comparison with the other concepts. The parameters selected for analysis were:

Cost

Safety

Mission Success

State of the Art

Logistics

Operational complexity

Inventory (in terms of actual vehicles)

Design complexity

ORL application

OSE required

Artificial "g"

OSE hangar

In addition to the comparative evaluation parameters just mentioned, it was felt that a reasonably sound mass comparison could be made based on the following logic. While the designs did not go into great detail, they did provide certain information such as numbers of crewmen, concept volume and surface area, checkout equipment requirements, and spares requirements. Knowing these, it was possible through the application of parametric design data to make reasonable estimates of subsystem requirements for electrical power, guidance and navigation, attitude control and stabilization, environomental control, life support, and communications, even though no subsystem detail design was undertaken. With these estimates, design parametric data was applied to estimate the mass of these systems. At the same time, general structural techniques were assumed for the OLF structure and this with known volumes and surface areas allowed realistic mass determination for the structure.

While these mass estimates may not be precise in a quantitative sense, they should none the less be reasonably sound on a comparative basis. Figure 5.2-12 shows the weight comparison of the 12 parametric concepts. Several concepts stand out by their deviation from the average value. Concept 8 had a mass of about 122,000 kg (270,000 pounds), but this concept utilized a total of ten individually orbiting 3.07 M (120 in.) diameter modules, which indicates a rather inefficient system. Concept 10 was also heavier than average, with a mass of about 95,200 kg (210,000 pounds), which was to be expected since it was the redundant concept utilizing four MORL modules. Concepts 2 and 3 show the effect of halving or doubling the crew size. The changes in vehicle mass were certainly not proportional to the crew size changes,since the 9-man vehicle had a mass of about 58,400 kg (130,000 lbs.), compared to the 18-man baseline at about 71,500 kg (158,000 lbs.) while the 36-man concept had a mass of only 96,000 kg (212,000 lbs.). Concept 6, without a hangar, also had a less than average mass of approximately 64,300 kg (142,000 lbs.). The remainder of the concepts fell within a rather narrow band, ranging between approximately 67,800 kg (150,000 lbs.) and 73,600 kg (163,000 lbs.) mass. Each of these, however, was well within the Saturn V orbital payload capability. The total mass of each of these concepts was so nearly the same that it was felt that other considerations might be of more importance, hence, the evaluation parameters mentioned earlier were considered for each of the concepts.

Figure 5.2-13 shows the comparison of each concept for the different evaluation parameters. The chart is coded such that a minus sign (-) indicated an unfavorable rating, and a plus sign (+) indicated a favorable rating. Some shading of values was attempted, for example a double minus (=) very unfavorable and a zero plus (0+) was somewhat better than average. No effort was made to assign a relative importance value to the different parameters, such as whether the design complexity parameter was more important than the logistics parameter. For this reason, no total point rating system can be made of the various concepts. However, a general indication of which concepts appear the best from an overall standpoint can be obtained.

In reviewing the parameters one by one, certain conclusions were reached. Costs were considered to be closely related to size and total mass of the concept and this is so indicated in the chart. From the standpoint of safety, the nuclear concept (number 4), as well as the individually orbiting concepts, were considered unfavorable while the docked concept (number 12) was considered the most favorable. From the probability of mission success, the redundant concept (number 10) was considered outstanding, with the docked concept favorable and concept 8 poor because of the ten individually orbiting modules. The integrated modular concept (number 11) was considered somewhat better than average because of the use of the developed MORL module. In state-of-the-art, the nuclear reactor concept (number 4) was considered unfavorable while those using the modular approach were the best. From the logistics standpoint, the individually orbiting were considered unfavorable because of the multiplicity of dockings required. The same held true for operational complexity, but the docked concept was considered favorable in this respect. In the matter of inventory, the multiplicity of units in concepts 8, 9 and 10 was considered a handicap. In design complexity, those using the modular approach were considered best, while the nuclear concept was considered poor from this standpoint. From the modular approach, those using planned hardware concepts were obviously the favored ones. Required OSE was greatest in the individually orbiting concepts, which gave them an unfavorable

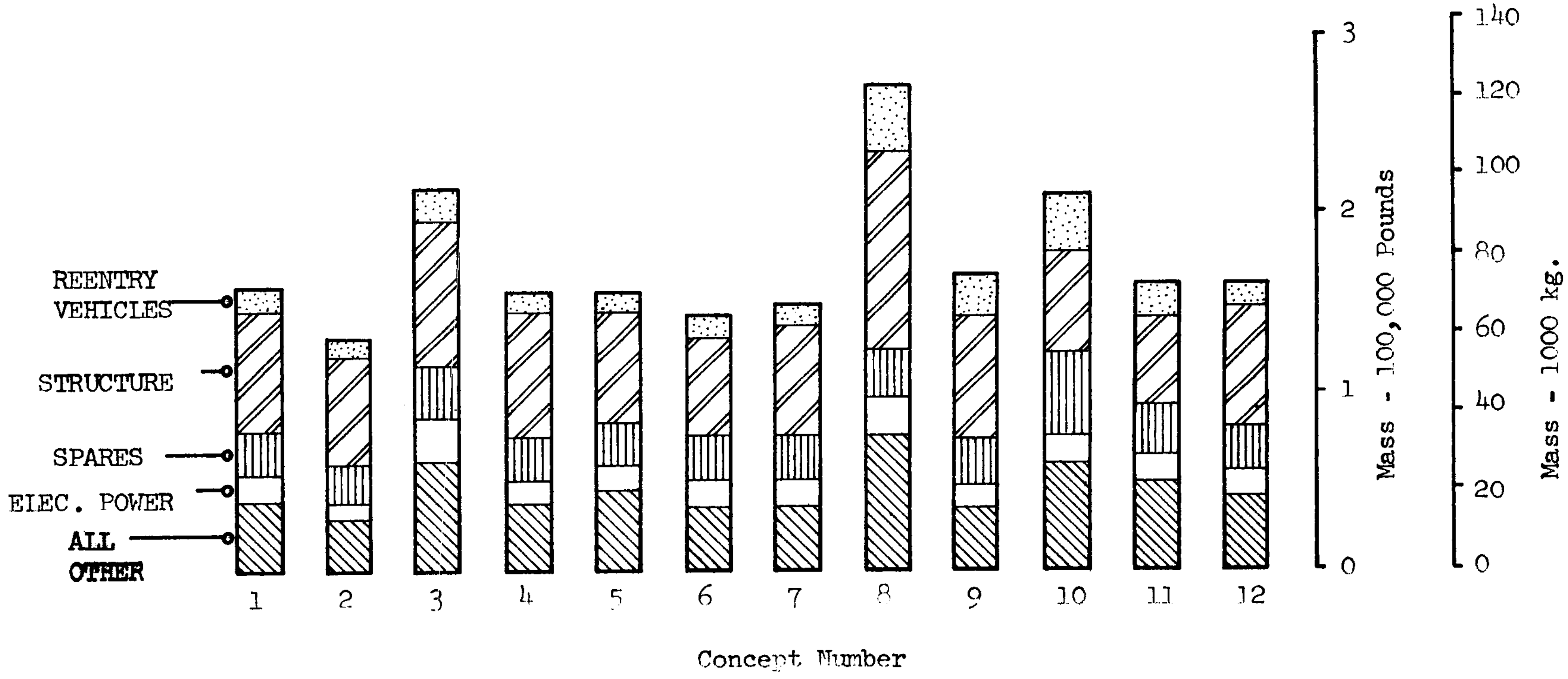

Figure 5.2-12 PARAMETRIC CONCEPT MASS COMPARISON

CONCEPT COMPARISON

CONCEPT	1	2	3	4	5	6	7	8	9	10	11	12
COST	0	+	-	0	0	0	0	=	0	-	0	0-
SAFETY	0	0	0	-	0	0	0	=	-	-	0	+
MISSION SUCCESS	0	0	0	0	0	0	0	-	0	++	0+	+
STATE OF ART	0	0	0	-	0	0	0	+	+	+	+	0
LOGISTICS	0	0+	0-	0	0	0	0	=	-	-	0	0
OPERATIONAL COMPLEX	0	0+	0-	0-	0	0	0	=	-	-	0	+
INVENTORY	1	1	1	1	1	1	1	10	3	4	1	1
DESIGN COMPLEX	0	0	0	-	0	0	0	+	+	+	0+	0
MODULAR	-	-	-	-	-	-	-	+	+	+	+	-
OSE REQUIRED	0	0	0	0	0	0	0	-	-	-	0	+
ARTIFICIAL "G"	+	+	+	+	-	+	+	=	0	0	+	+
OSE HANGAR	+	+	+	+	+	-	+	-	-	-	0	+

Figure 5.2-13 OLF CONCEPT COMPARISON

rating, while the docked concept was best in this parameter. From an artificial "g" standpoint, those providing artificial "g" were given a favorable rating and the MORL module concepts (9 and 10) were given an average rating because of the centrifuge provisions. Finally, from the OSE hangar standpoint, those concepts with a hangar were given a favorable rating and those without an unfavorable rating, while concept 11 was given a neutral rating since a hangar could be provided with minor modifications.

In comparing each of the concepts from the overall standpoint, it is well to concentrate on those which have common criteria from the standpoint of crew size and checkout mission objectives. This eliminates from consideration concepts 2 and 3, which were actually a size iteration of the baseline concept and cannot be fairly compared with the other concepts for that reason. Also eliminated is concept 10, which had an intentional redundancy built into it, which none of the others had. Of the remaining concepts, two appear to be superior from an overall standpoint by virtue of a relatively large number of favorable ratings with a minimum number of negative ratings. These are concept 11, which was the unitized modular concept utilizing the MORL module, and concept 12, using the docked mode for checkout.

At the time the parametric study was completed, a design coordination meeting was held with Marshall Space Flight Center personnel associated with the program to select an OLF concept for detail design iteration studies. Based in part on the results of the parametric study and in part on the consensus of the design coordination meeting group, a design was selected for further study which was actually a compromise of several concepts. The major recommendations for the design were:

- The design should utilize the MORL concept as building blocks.
- The design should be unitized (single vehicle) unit.
- It should incorporate artificial "g" as an optional mode of operation.
- The checkout mode should be with the OLV docked to the OLF.
- It should be designed for a maximum full-time crew of 12 men.

5.2.4 Baseline Development. - With the completion of the parametric study and the establishment of the major design criteria for the baseline concept noted in the previous section, the development of the baseline concept for the detail design iteration studies was started. During this phase of the design studies three different concepts, each meeting the required criteria for the baseline, were investigated before one of them was selected for the baseline concept for the initial OLF. The first configuration utilized existing or planned concepts to the maximum extent possible and was launched into orbit by four Saturn IBs. This concept required orbital rendezvous, docking, and assembly of the component parts of the OLF. The second concept utilized two MORL modules, with an interconnecting cylindrical structure which served as a docking hub, hangar bay, and experiment bay. At launch by a single Saturn V the MORL modules were retracted into the OLF cylindrical portion. The third concept modified the design of the second concept only to the extent that allowed it to be launched by three or more

Saturn IBs. In evaluating the three concepts, which is discussed in more detail later, the second concept mentioned above was selected as the baseline and will be referred to as the baseline initial OLF. The first concept mentioned above will be referred to as alternate number 2, and the third concept as alternate number 1.

5.2.4.1 OLF Alternate Number 2. - This concept was the first one considered in the baseline development study. In addition to meeting the baseline criteria, one of the primary objectives of the design was to utilize as much existing hardware or design concepts as possible as building blocks in the configuration. Figure 5.2-14 shows this OLF concept with the OLV and tankers docked to it.

The facility consists of two Douglas MORL modules, joined by two LEM adapter structures and two Apollo service modules to a central docking hub. Joined in this fashion, a 21.3M (70-foot) spin radius for artificial gravity is provided at the crew compartment. The spin capability is provided as a backup to the centrifuge within the MORL. A maximum of 18 men can be temporarily accommodated by the facility with permanent quarters available for a total of 12 crewmen.

Four separate launches of the Saturn IB are required to place the facility into a near Earth orbit. Each of the first two unmanned launches places a MORL in orbit. The third and fourth launches are manned. Each utilizes a 6-man Apollo on top of an Apollo service module and an Apollo block II LEM adapter structure. During boost, one adapter structure contains spares and the other houses fewer spares, plus the docking hub. After arrival in orbit, each manned portion then performs a rendezvous with a MORL. The propulsion unit for this maneuver is contained by the Apollo service module. Prior to docking the MORL to the LEM adapter, the docking hub is manually removed from inside the adapter and secured to the outside. Solar panels are also deployed from their stowed position. After securing the LEM adapter to the MORL, this entire assembly performs a second rendezvous maneuver (utilizing the same propulsion system) to the vicinity of the like assembly. The two assemblies then join at the docking hub in the position shown. It is necessary for only one of the two assemblies to make the second rendezvous maneuver, but each is designed with the capability to provide redundancy. The rendezvous engine is aligned with the structural centerline. Conventional gimbal limits will permit this engine to thrust through the first and second (or combined) centers of gravity. This engine can not be fired until after the Apollo command module is hinged open and tracked to the aft end of the LEM adapter structure. This action permits an unobstructed flow of engine exhaust products, but the engine must be ablation cooled since it sees the walls of the service module. The total burning time for both propulsion maneuvers probably will not exceed two minutes. The expansion ratio of the engine skirt is chosen to be quite large (around 50), so that the skirt will be physically large enough to fit around the outside of the retropropulsion pack on the aft side of the Apollo command module, this being the physical arrangement during boost. The engines have a stowed position to permit passage of personnel from the docking hub to the crew module.

The docking hub concept allows good emergency escape capability for the crew by means of the two 6-man Apollos. In order to free the Apollo from the launch hub position, it is hinged to allow it to be swung about to the outside of the service module. The hinge is located at the "boost-abort separation joint".

1

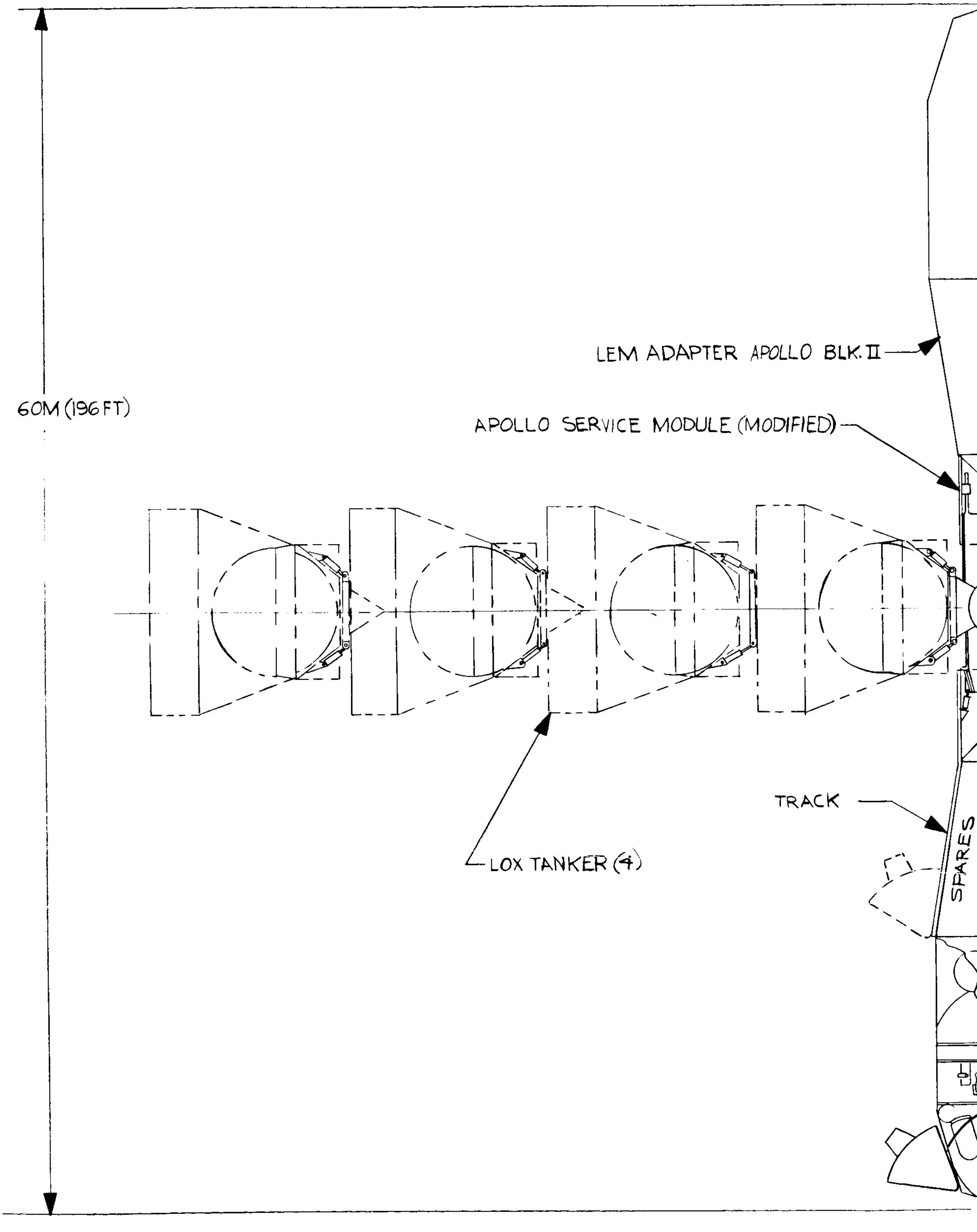
LEM ADAPTER APOLLO BLK. II
60M (196 FT)
APOLLO SERVICE MODULE (MODIFIED)
TRACK
SPARES
LOX TANKER (4)

2

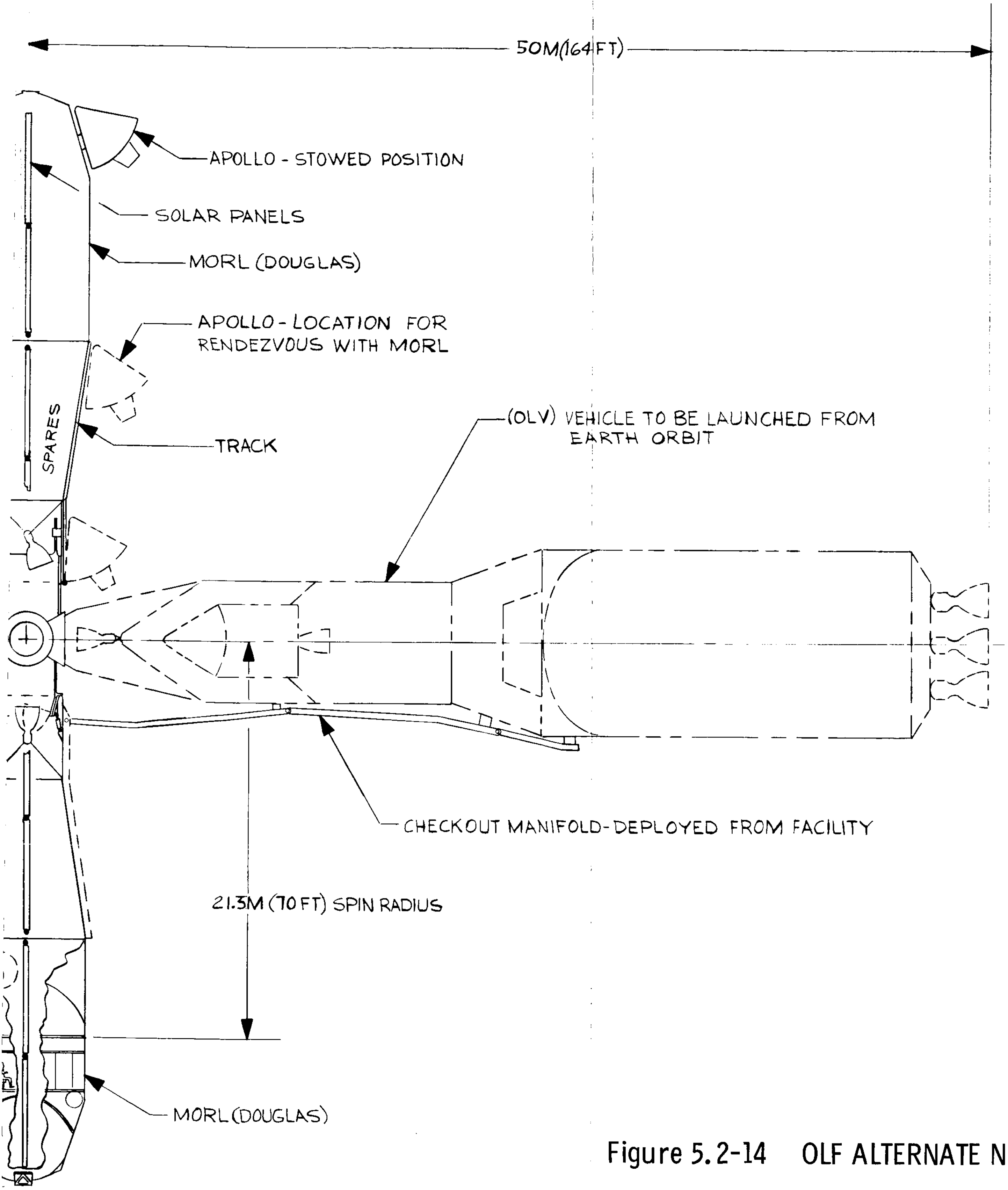

Figure 5.2-14 OLF ALTERNATE NO. 2

After injection into orbit, the Apollo rotates approximately 213 degrees on its hinged axis to contact a track on the outside of the service module and adapter structure. The hinge pin is released, and the Apollo moves up the track to the position shown at the outboard end of the LEM adapter structures. This action exposes the rendezvous propulsion engine and at the same time places the center of gravity within reasonable gimbal limits for the engine. This aft location also places the crew in good position for visually assisting the docking maneuver with the MORL. After the adapter is joined with the MORL, the Apollo leaves the tracks, docks with the MORL docking port, and discharges the crew. The second propulsion maneuver for rendezvous of the two assemblies can then be performed.

5.2.4.2 Baseline Initial OLF. - The previous concept met the initial OLF baseline requirements adequately, but it was felt that an effort should be made to generate a design which could be launched by a single booster. The result of this exercise was the concept shown in Figure 5.2-15. This concept ultimately became the baseline design for the initial OLF. The drawing shown in the figure depicts the concept as it was originally conceived. Subsequent design iterations and improvements have changed many of the details, but the basic configuration survived essentially as shown in the Figure. Like the concept described in the previous section, this one was also made up of two MORL modules with interconnecting structure. Unlike the earlier concept, the interconnecting structure of this concept consisted essentially of a large cylinder extending from one MORL to the other.

The OLF is to be launched by a Saturn V launch vehicle. To the right in the Figure is shown the launch configuration of the OLF. The two MORL modules have been retracted into the cylinder up to the hub compartment to make the launch package as short as possible. Extending from the top of the OLF is a shroud which houses a standard Apollo instrument unit and supports a six-man Apollo command module. Between the lower end of the OLF and the SII stage, is an adapter section and injection stage which provides the energy to get from the parking orbit to the 535 kilometer (289 n. mi.) operational orbit. After launch and achievement of the 535 kilometer (289 n. mi.) orbit, the shrouds, instrument unit, and transtage are secured together and deorbited by a propulsive impulse by the injection stage. The six-man Apollo executes a maneuver to reverse its position and docks nose first into the MORL docking port.

The MORLs are then extended to the extremities of the cylinder from their launch position, as is shown to the left in Figure 5.2-15. This view shows the operational configuration of the OLF. In this configuration a large hangar space becomes available on each side of the central docking hub compartment between it and each MORL. Early in the assembly operations, inflatable pressurized tunnels are attached between the MORL airlocks and the hub section. These tunnels and the hub section as well as the MORLs, are all pressurized to 7.0 psi, so that a "shirtsleeve" environment is available from MORL to MORL through the hub. To allow balancing for artificial gravity operation, a counterbalance adjustment is provided between one of the MORLs and the cylinder. The access tunnel on this end is provided with a bellows to allow for distance variations due to balance adjustments. Shown in one of the hangars is a Gemini module, which is provided toallow emergency abort of one or two crewmen in case of illness or other reasons without using one of the six-man Apollos which would still provide emergency abort capability for the entire remaining crew. During launch the Gemini capsule

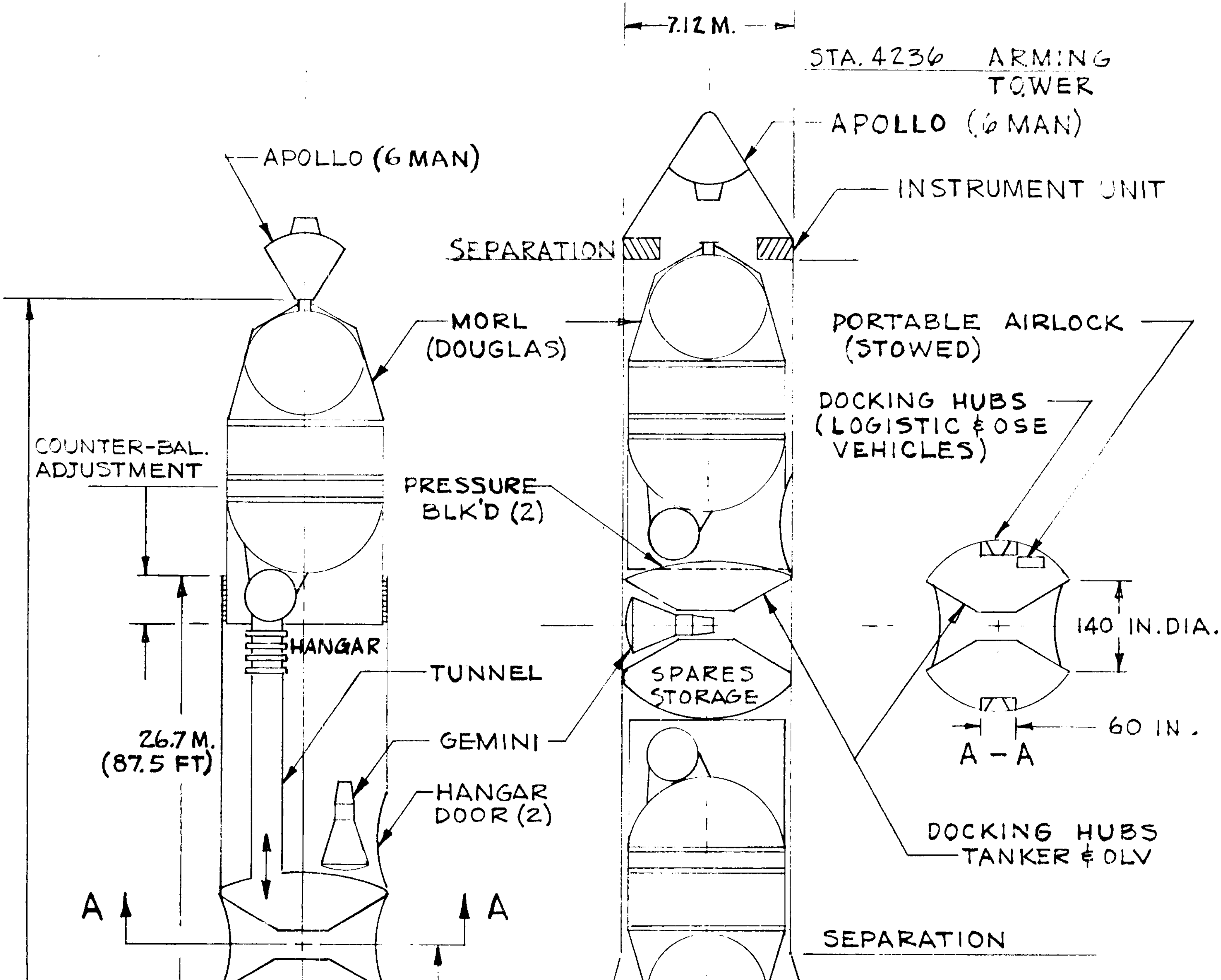
7.12 M.
STA. 4236
ARMING TOWER
APOLLO (6 MAN)
INSTRUMENT UNIT
SEPARATION
APOLLO (6 MAN)
MORL (DOUGLAS)
PORTABLE AIRLOCK (STOWED)
DOCKING HUBS (LOGISTIC & OSE VEHICLES)
COUNTER-BAL. ADJUSTMENT
PRESSURE BLK'D (2)
HANGAR
TUNNEL
SPARES STORAGE
140 IN. DIA.
26.7 M. (87.5 FT)
GEMINI
60 IN.
A – A
HANGAR DOOR (2)
DOCKING HUBS TANKER & OLV
A
A
SEPARATION

2

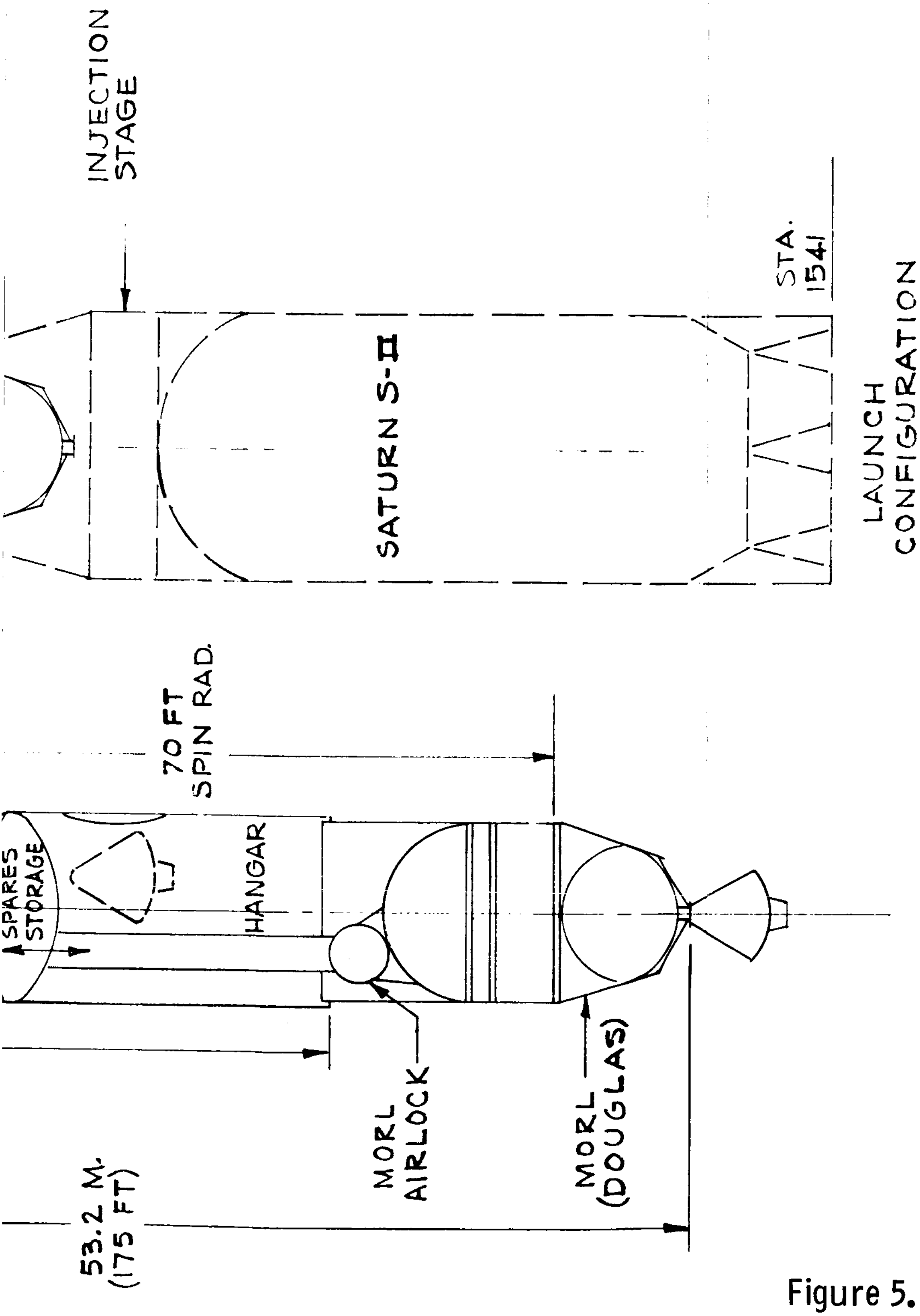

Figure 5.2-15 BASELINE OLF

is stored in the hub, hence one of the early assembly and checkout operations is to transfer the capsule from the hub to the hangar bay. To provide access to the hangar, each is provided with a door sufficiently large to allow entry of an Apollo module. The hangars may be pressurized to provide a shirtsleeve environment for maintenance operations. The hub area is bounded by two pressure bulkheads and contains a pressurized space for spares storage and service supplies as well as the docking ports. The large docking ports for the OLV and tankers are not in the pressurized volume. At right angles radially from these ports and in the pressurized space are two other docking ports which are designed to accommodate logistics vehicles and orbital support equipment. Also provided is a portable air lock, which may be attached to the small docking ports to allow personnel to go outside the vehicle for extravehicular activity. Shown on the drawing are two 6-man Apollos, one at each end of the facility. These provide abort capability for the crew as previously mentioned. The added Apollo module in addition to the one provided by the original launch is required if more than 6 crewmen are aboard the OLF. It is delivered by a supplemental logistics launch. Not shown on the drawing are the solar panels which furnish the on-board power.

5.2.4.3 OLF Alternate Number 1. - In order to investigate the flexibility of the baseline initial OLF described in the previous paragraph, a brief analysis was made of the feasibility of modifying the design to permit it to be launched by several Saturn IBs.

Several approaches may be considered to accomplish this, using three, four, or five boosters. In the three booster version, one payload is made up of the hub section, the cylinder and the command module. A second payload is made up of one of the MORL modules retracted into a cylindrical hangar bay and an injection stage propulsion unit. The third payload is made up of the other MORL and cylindrical hangar bay, and an injection stage propulsion unit. In this version, orbital rendezvous, docking, and assembly are required for the three component parts of the OLF; thus complicating their design by the added propulsion and rendezvous equipment as well as the docking provisions and requirement for structural joints. The capability must also be provided of extending the MORL modules out from the cylindrical sections after assembly.

By incorporating further design modifications in the baseline initial OLF concept, and with additional rendezvous and docking capability, it is possible to launch this concept with four or even five Saturn IB boosters. This allows more weight to be put into the OLF cylindrical sections and hub, providing greater structural integrity and redundancy. While detail payload packages haven't been defined, it is probable that with the three booster versions, much of the expendable and spares payload would have to be provided after the initial OLF launches by logistics vehicles, whereas with four or five boosters used for the initial launch, most of this payload could be sent with the initial launch. In the case of launch by four Saturn I-B boosters, the payloads would be one MORL on each of two boosters, the cylindrical sections retracted into each other on the third booster and the hub on a fourth. With five boosters, one MORL would be launched on each of two boosters, a cylindrical portion on each of two more, and the hub on a fifth booster. Appropriate logistics payload would be distributed among the packages as booster payload capability permitted. No drawing has been made of this configuration.

5.2.4.4 Baseline Selection. - It was necessary at this time to make a choice of one of the three baseline concepts to use as the initial OLF design concept on which to conduct the detail design iteration studies and on-board systems development. The analysis that led to the baseline selection is summarized in the following tabulation which shows the baseline, alternate 1, and alternate 2 designs rated against a number of design and launch evaluation parameters. The concepts are rated as favorable, neutral, or unfavorable.

BASELINE CONCEPTS EVALUATION

Concept Comparison	Baseline	Alternate 1	Alternate 2
Design Complexity	favorable	neutral	neutral
Ease of Operations	favorable	favorable	neutral
Growth Capability	favorable	favorable	unfavorable
Use of Existing Design Concepts (ORL Evolution)	favorable	favorable	favorable plus
Probability of Successful launch	favorable	unfavorable	unfavorable
Cost of Launch	favorable	neutral	unfavorable
Launch Payload Capability	favorable	neutral	neutral
Orbital Rendezvousq and Docking	favorable	unfavorable	unfavorable
Orbital Assembly	favorable	unfavorable	unfavorable

Design Complexity. - In comparing design complexity, the baseline concept is best, since deployment is easily accomplished and it is felt that the on-board electronic and propulsion systems to allow orbital rendezvous and docking of the alternate concepts will lead to considerable complexity of their designs. In addition, the design provisions to allow assembly and sealing of the various individually orbiting sections of the alternate concepts into a single vehicle will add to their complexity.

Ease of Operations. - The baseline and alternate concept number 1, with larger centralized hub areas and the addition of elevator tubes, provide for easier commuting between the MORL Modules and OLV, and provide more volume for shirtsleeve environment than presently conceived with alternate concept number 2.

Growth Potential. - The baseline and alternate concept No. 1 both offer the same degree of growth through appropriate hub modifications and by the addition of other MORL modules and cylindrical spokes from the hub section. Alternate concept number 2 is somewhat restricted however, due to the limited capability of the LEM adapter and SM hardware elements which are used in this concept.

Use of Existing Design Concepts. - In the use of existing hardware designs, alternate concept number 2 is best, since it uses not only MORL modules as do the other two, but also LEM adapter and Apollo service module structural shells in its design. It may be, however, that use of the structural shells without the subsystems of the original designs is not of significant advantage. The LEM adapter structure itself must be modified to suit the OLF application.

Probability of Successful Launch and Cost. - The highest probability of a successful launch will most likely be achieved by the baseline launch system, since only one Saturn V launch vehicle is required; whereas, in each of the other modes several Saturn IBs are necessary to launch. While only preliminary figures have been acquired, it is believed that the total cost of one Saturn V launch is slightly less than three Saturn IBs, and certainly less than four.

Launch Payload Capability, Orbital Rendezvous and Docking and Orbital Assembly. - The baseline with a Saturn V launch vehicle has a much greater payload capability, allowing more redundancy and structural integrity to be built into the OLF. It also enjoys the advantage of not requiring orbital rendezvous, docking, and orbital assembly as do the alternate modes.

In considering the overall evaluation of the concepts shown on the chart, it is readily apparent that the baseline concept enjoys a favorable comparison with the alternate 1 and alternate 2 concepts in all of the parameters considered and in several cases a marked advantage. Based primarily on the comparison shown here, the baseline concept was selected as the baseline design for the initial OLF detail design studies.

5.2.5 Baseline Design Criteria. - As the parametric and baseline selection studies progressed, technical and operational studies were being conducted which generated certain criteria regarding direction, limits, or policy and operational activities, functions and modes. The following figure shows the final general guidelines and criteria, which were used in the development of the initial OLF.

FIGURE 5.2-16 BASELINE OLF DESIGN CRITERIA

OLF Functions:

a. Lodge, the following:

  1. 12 crewmen indefinitely
  2. 18 for 15 days

b. Hangar, the following:

  1. OSE (4 AMUs, 2 RMUs)
  2. Logistic spacecraft

FIGURE 5.2-16 BASELINE OLF DESIGN CRITERIA - continued

Earth Launch Consideration:

a. OLF must be capable of being launched by one Saturn V.

b. OLV must be compatible with VAB and pad constraints.

c. Saturn V payload is 99,500 kg (220,000 lbs.).

OLF Capabilities:

a. Provide centrifuge for basic crew gravitational conditioning.

b. Provide artificial gravity capability within limits defined in NASA TN D-1504 (see Paragraph 6.1).

c. Provide maintenance and repair for OSE and OLF in shirtsleeve environment.

Logistic Requirements:

a. Provide supplies and expendables in initial launch for 90 days plus 45-day emergency.

b. Provide spares for a 99.9% probability that the spare will be available for OLF, OLV, OSE and logistic spacecraft.

c. Provide propellants for entire OLO in initial launch.

d. Resupply takes place every 90 days.

e. Crew time in space 180 days.

f. An Apollo logistic system will be used.

OLF Deployment:

a. Orbital Altitude of 535 km (289 n. mi.).

b. Launch inclination of 28° to 32°.

c. Initial OLO will take 170 days (nominal)

d. OLF parking orbit will be 185 km (100 n.mi.).

e. OLF will extend without requiring extra vehicular activity.

OLF Safety:

a. Meteroid protection for 5 years.

FIGURE 5.2-16 BASELINE OLF DESIGN CRITERIA - continued

b. Cumulative radiation limited to 27 rads.

c. OLF shall be compartmentalized by airlocks or hatches so failure of a section will only endanger crew in that section.

d. OLF will be designed to minimize extravehicular activity.

e. Transfer of men and materials from other spacecraft will be performed in shirtsleeve environment.

f. The logistic spacecraft will be maintained operational at all times to serve as emergency vehicles.

Operational Consideration:

a. Docking closure rate is .5'/sec. max.

b. OLV fuel transfer operations must be completed in 2 hrs. max.

c. All compartments in the OLF must be capable of being pressurized to 7 psia (shirtsleeve environment) 50% N_2, 50% O_2.

d. Orbital operational requirements will be borne by the OLF to minimize OLV performance penalty.

e. OLF will not be spun during OLO.

f. At orbital launch the OLF will move away from the OLV.

General Design Considerations:

a. Use existing MORL modules and systems with a minimum of change.

b. Docks and airlocks will be the same as those specified in the MORL and tanker studies.

c. OLF systems important to life will be modularized and situated so that no one failure can endanger personnel.

d. Subsystem design will be such as to allow for maintenance within the OLF to the maximum extent.

e. Necessary systems for docking and servicing OLV will be provided as part of the OLF design.

f. During docking operations OLF plays passive role, but must have the capability to be maneuvered if required.

g. Attitude control system will be sized to stabilize the OLF in all OLO configurations.

h. OLF power requirements are 11 kw peak.

FIGURE 5.2-16 BASELINE OLF DESIGN CRITERIA - continued

i. A boost limit load factor of 5 "g" will be assumed.

j. Communication system will allow all data to be transmitted to one ground station in each orbit.

k. The umbilical tower will be stowed along the OLF and be electrically positioned and manually connected to the OLF.

l. A suitable airlock shall be provided to allow personnel to exit and reenter the OLF for extravehicular activities.

m. OLF lifetime designed for five years.

n. A common design shall be used for the OLV and tanker docking cones.

o. Hangar hatch shall allow entry of Apollo logistics vehicle.

5.3 Initial OLF Design

The detailed design for the initial OLF which is described in this paragraph was developed from the concept selected in Paragraph 5.2.3 from the three considered therein for the baseline design. Using this design as a basis for the design iteration studies, it was developed to fulfill the detail design criteria presented in the previous section.

The initial OLF design as it finally evolved was consistent with the latest planning on the MORL module and on-board system design. Early in the OLF study the MORL modules had been designed to utilize solar panels to provide on-board power and oxygen was resupplied by the logistic systems as it was expended. Since one of the study ground rules was that the OLF concept use the MORL modules as building blocks with the minimum changes, the early OLF design also incorporated the use of solar panels and an expendable oxygen supply system. Late in the OLF study, however, plans were made to revise the MORL concept to incorporate an Isotope/Brayton power conversion system for the on-board power and a Tapco Bosch oxygen regeneration system. The OLF design was then modified to also include these systems. The incorporation of the Isotope/Brayton cycle power system also allowed an auxilliary heating system in the environmental control/life support (EC/LS) system to be eliminated since sufficient excess heat was provided as a by product of the power system to satisfy the heating requirements. While these on-board systems are described in considerable detail in Paragraph 5.4, their considerable effect on the overall configuration and its appearance is discussed here.

a. Electric Power System. - Originally, the OLF on-board power system used solar panels with an area of 146m^2 (1,575 ft^2), with nickel-cadium batteries for dark periods. The solar cells were mounted on non-articulated flexible panels, stowed by wrapping around the MORL which were deployed after MORL extension. Being fixed panels, constant orientation of the OLF with respect to the sun line was required. The energy requirement for the assembly and checkout, prior to activation of the solar panels, was 145 kw. As the batteries could supply only 7.2 kW, it was necessary to have a separate auxiliary power source which was supplied by a fuel cell.

When the MORL power system was changed to an Isotope/Brayton power conversion cycle, it was found that it was readily adaptable to the OLF with few modifications. The main change consisted in relocating the system from the MORL skirt area to the OLF hub section, and providing the necessary cooling radiators adjacent to the hub. Sufficient power was provided for the OLF by one MORL power system. By relocating the power system in the OLF hub, the separation distance from normal crew activities was greater than in the MORL application; as a result, the shielding thickness could be reduced without increasing the total integrated radiation dosage to the crewmen. A number of advantages accrued with the use of the Isotope system. There was no longer a requirement for an auxiliary power source for use during assembly and checkout of the OLF, as the Isotope system would be in full operation from launch. The original isotope heat source used by the MORL EC/LS system would no longer be required, as the EC/LS system heat demand would now be furnished directly as a by produce by the PU-238 heat source used in the Isotope/ Brayton Cycle. The attitude control and stabilization system would no longer have to keep the solar panels sun oriented, as was the previous case. While there were some system mass penalties, the reduction in propellant resupply made it a profitable trade.

b. Oxygen Supply. - The original system required that the metabolic makeup oxygen be supplied by O_2 stored in bottles, which demanded that approximately 1130 kg (2500 lbs.) of O_2 be supplied by the logistic vehicle every 90 days. Studies by the MORL contractor indicated that an oxygen regeneration system would be feasible and advantageous to the MORL, and it was therefore, adopted. To insure maximum commonality, this system was also incorporated into the OLF concept with only minor changes required and an increase of 21.4m^2 (230 ft.^{2}) to the radiator area from the earlier EC/LS system not using oxygen regeneration. The system adopted is the Tapco Bosch oxygen regeneration system, in which desorbed CO_2 is delivered to a reduction system that is connected directly to the solid absorption system. The heat source used will be the Isotope/Brayton power system.

There are some penalties associated with the use of this system, such as an additional requirement of 3,525 watts of electrical energy and a mass increase associated with the new system. However, the Brayton cycle power system is capable of providing the additional power while mass penalties are offset by the reduction in oxygen resupply.

c. Heating Circuit. - In the previous MORL, heat was supplied to the EC/LS system by means of a radioisotope source located in each MORL. However, use of the Isotope/Brayton cycle power system allowed use of the isotope from that system as a heat source, thereby eliminating the previous isotope heat sources in each MORL. This was adopted for the OLF with changes to plumbing and heat exchangers.

5.3.1 General Design Considerations. - Paragraphs 5.3.2, 5.3.3 and 5.4 cover the detail design of the OLF; however, a brief description with appropriate drawings is provided here to make it easier to follow subsequent design details.

Figure 5.3-1 shows the design concept, which consists essentially of two MORL modules connected by a 7.3m (24 ft.) diameter cylindrical section. Shown are two configurations; the launch configuration above, with the operational configuration at the bottom. As it is not possible to launch the OLF in the extended position due to length limitations, its design is such that the MORls can be retracted into the cylinder shell for launch and extended once in orbit. The 54m (177 ft.) length of the deployed OLF is dictated by the requirement for a backup artificial gravity capability. When the facility is spun at 4 rpm, the living quarters are provided with a .37 factor of artificial gravity at the 21.3m (70 ft.) spin radius. Paragraph 6.1 details the reasons for these requirements.

5.3.1.1 OLF Operational Configuration (Fig. 5.3-1). - This configuration is made up of a basic cylinder, with appropriate meteroid protection, connected to a MORL module on either end. The overall configuration is approximately 54m (177 ft.) in length and 7.3m (24 ft.) in diameter. In the center of the cylinder is a hub provided with docking ports for the orbital launch vehicle, LOX tankers and logistic spacecraft. Docking ports are also provided in the end of each MORL for the logistic vehicles. Two 1.53m (5 ft.) diameter tubes run between the MORls and the hub and provide a shirtsleeve environment for the transfer of men and materials between MORLs, or the hub and either MORL. The large spaces between the MORL and the hub are used as a hangar space for the OSE and Apollos at one end and as an experiment bay on the other. These bays are normally pressured to 3.5 psia, but either can be pumped down to provide 7 psia in the other. The hub contains an elevator terminal where the tubes running from the MORLs terminate, which is maintained at 7 psia. At the midpoint of the hub are located the four docking ports. This compartment, though normally pressurized, may be depressurized as required for docking.

A more detailed description of the baseline OLF configuration follows.

Primary Structural Cylinder. - The primary structural elements of the OLF consist of a cylinder with an inner diameter of 7.14 m (281 in.) and an overall length of 28.65m (1,128 in.) constructed of a corrugated semimonocoque aluminum structure. It is manufactured with frames and corrugations outside the pressure skin to provide a good working interior. Meteoroid protection is obtained by three aluminum shields. Bumper wall standoffs (outside shields) are fabricated of fiberglass epoxy laminate because of its superior thermal conduction properties. Additional thermal control is obtained with a glass wool fiberous insulating material. The radiator for the nuclear power plant is located near the center section of the cylinder. Enclosed in the structural cylinder are the hub, the experiment bay, and the hangar bay. Within each bay are the "elevator" tubes which provide mobility and a shirtsleeve environment for men and materials.

Attached to the structural cylinder is the umbilical boom, which is used to service the OLV. This is a complex item of equipment and is further described in Paragraph 5.3.2. Eight of the twenty-four reaction control engines rated at 222N (50 lbs.) thrust are located on the cylindrical section as shown in Figure 5.3-1. These provide roll control, while four additional center section engines, rated at 667N (150 lbs.) thrust, are used for orbit keeping.

Experiment Bay. - No major equipment has been located in the experiment bay, as such requirements are dependent on the experiments to be performed. It has, however, atmospheric outlets which enable the adjacent MORL ECS to provide the pressurization and atmospheric purification necessary to maintain a shirtsleeve environment. In addition, spacesuit supply and oxygen supply lines have been provided to enable work to be carried on at reduced pressures. Normally, the experiment bay will be maintained at 3.5 psia; and pressurized to 7 psia, as required, by pumping down the hangar bay. The transfer pumps are located in the experiment bay, as are the initial pressurization tanks which will be used to extend MORLs. The nuclear power plant radiator is located on the outside perimeter adjacent to the hub. Access to this bay is through an airlock located in the elevator terminal.

Hangar Bay. - The hangar bay is used primarily as a shop to store and repair OSE in a shirtsleeve environment. A 4.07N (160 in.) diameter hangar door (Figure 5.3-2) has been provided large enough for an Apollo or Lunar assembly vehicle to enter for repair in the pressurized hangar environment. The hangar door is remotely controlled from the dock section of the hub. A mechanism has been provided which can take an Apollo from its docked position and place it in the hangar with the operator remaining in a pressurized environment. The adjacent MORL provides pressurization and atmospheric purification. Spacesuit and oxygen supply lines have also been provided in this bay. Access is through an

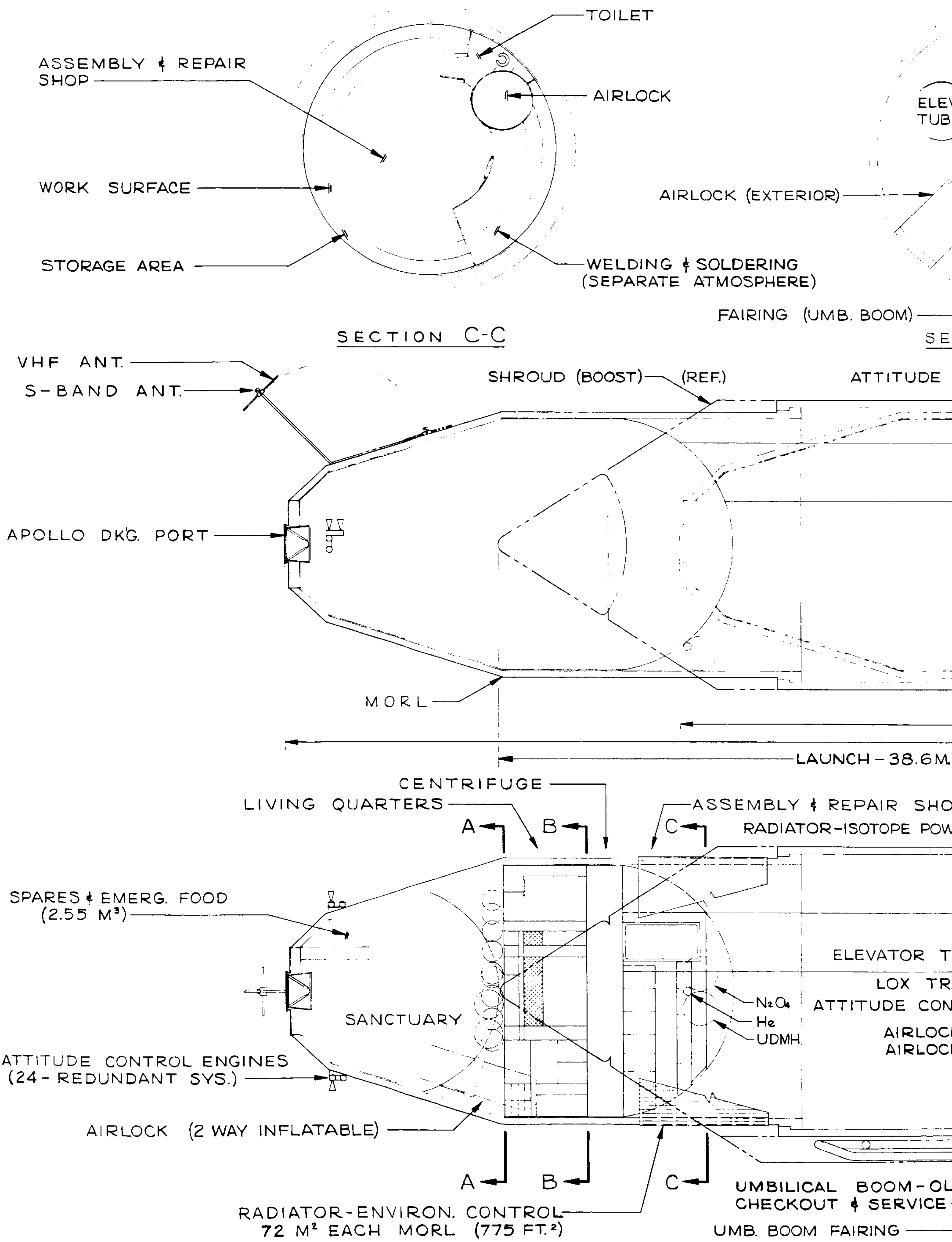
TOILET
ASSEMBLY ¢ REPAIR SHOP
AIRLOCK
WORK SURFACE
STORAGE AREA
WELDING ¢ SOLDERING (SEPARATE ATMOSPHERE)
SECTION C-C
ELEV TUB
AIRLOCK (EXTERIOR)
FAIRING (UMB. BOOM)
SE
VHF ANT.
S-BAND ANT.
SHROUD (BOOST) (REF.)
ATTITUDE
APOLLO DK'G. PORT
MORL
LAUNCH - 38.6M
CENTRIFUGE
LIVING QUARTERS
ASSEMBLY ¢ REPAIR SHO
A
B
C
RADIATOR-ISOTOPE POW
SPARES ¢ EMERG. FOOD (2.55 M^3)
ELEVATOR T
LOX TR
N_2O_4
ATTITUDE CON
He
SANCTUARY
UDMH
AIRLOC
AIRLOC
ATTITUDE CONTROL ENGINES (24 - REDUNDANT SYS.)
AIRLOCK (2 WAY INFLATABLE)
A
B
C
UMBILICAL BOOM-OL
CHECKOUT ¢ SERVICE
RADIATOR-ENVIRON. CONTROL 72 M^2 EACH MORL (775 $FT.^2$)
UMB. BOOM FAIRING

2

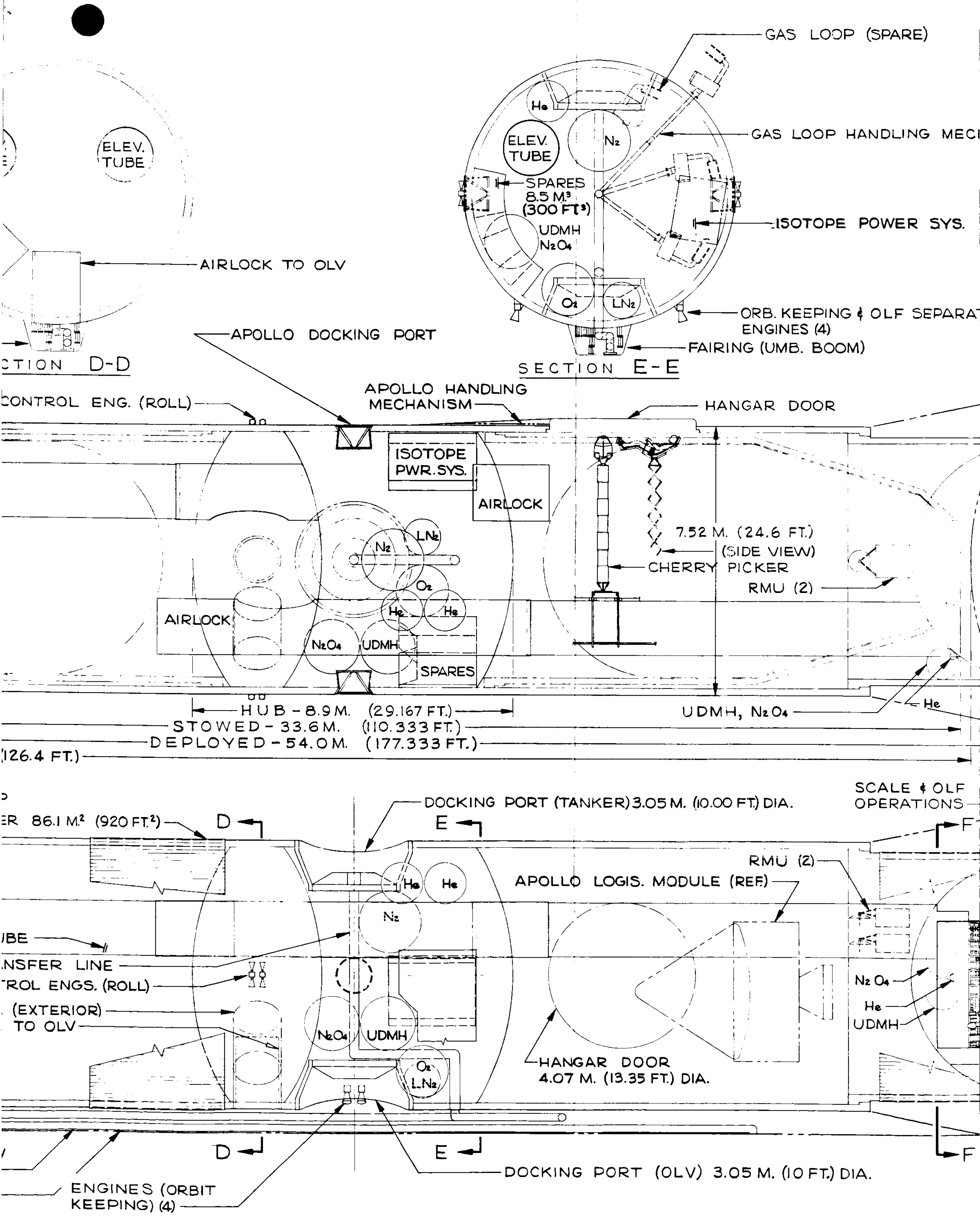
GAS LOOP (SPARE)
He
N₂
ELEV. TUBE
GAS LOOP HANDLING MECI
SPARES 8.5 M³ (300 FT³)
ISOTOPE POWER SYS.
UDMH N₂O₄
O₂
LN₂
ORB. KEEPING & OLF SEPARAT ENGINES (4)
FAIRING (UMB. BOOM)
SECTION E-E
ELEV. TUBE
AIRLOCK TO OLV
APOLLO DOCKING PORT
CTION D-D
CONTROL ENG. (ROLL)
APOLLO HANDLING MECHANISM
HANGAR DOOR
ISOTOPE PWR. SYS.
AIRLOCK
LN₂
N₂
O₂
He
He
N₂O₄
UDMH
SPARES
AIRLOCK
7.52 M. (24.6 FT.)
(SIDE VIEW)
CHERRY PICKER
RMU (2)
HUB - 8.9 M. (29.167 FT.)
STOWED - 33.6 M. (110.333 FT.)
DEPLOYED - 54.0 M. (177.333 FT.)
UDMH, N₂O₄
He
(126.4 FT.)
SCALE & OLF OPERATIONS
ER 86.1 M² (920 FT.²)
D
E
F
DOCKING PORT (TANKER) 3.05 M. (10.00 FT.) DIA.
RMU (2)
APOLLO LOGIS. MODULE (REF.)
He
He
N₂
UBE
NSFER LINE
TROL ENGS. (ROLL)
(EXTERIOR)
TO OLV
N₂O₄
UDMH
O₂
L.N₂
N₂O₄
He
UDMH
HANGAR DOOR 4.07 M. (13.35 FT.) DIA.
D
E
F
DOCKING PORT (OLV) 3.05 M. (10 FT.) DIA.
ENGINES (ORBIT KEEPING) (4)

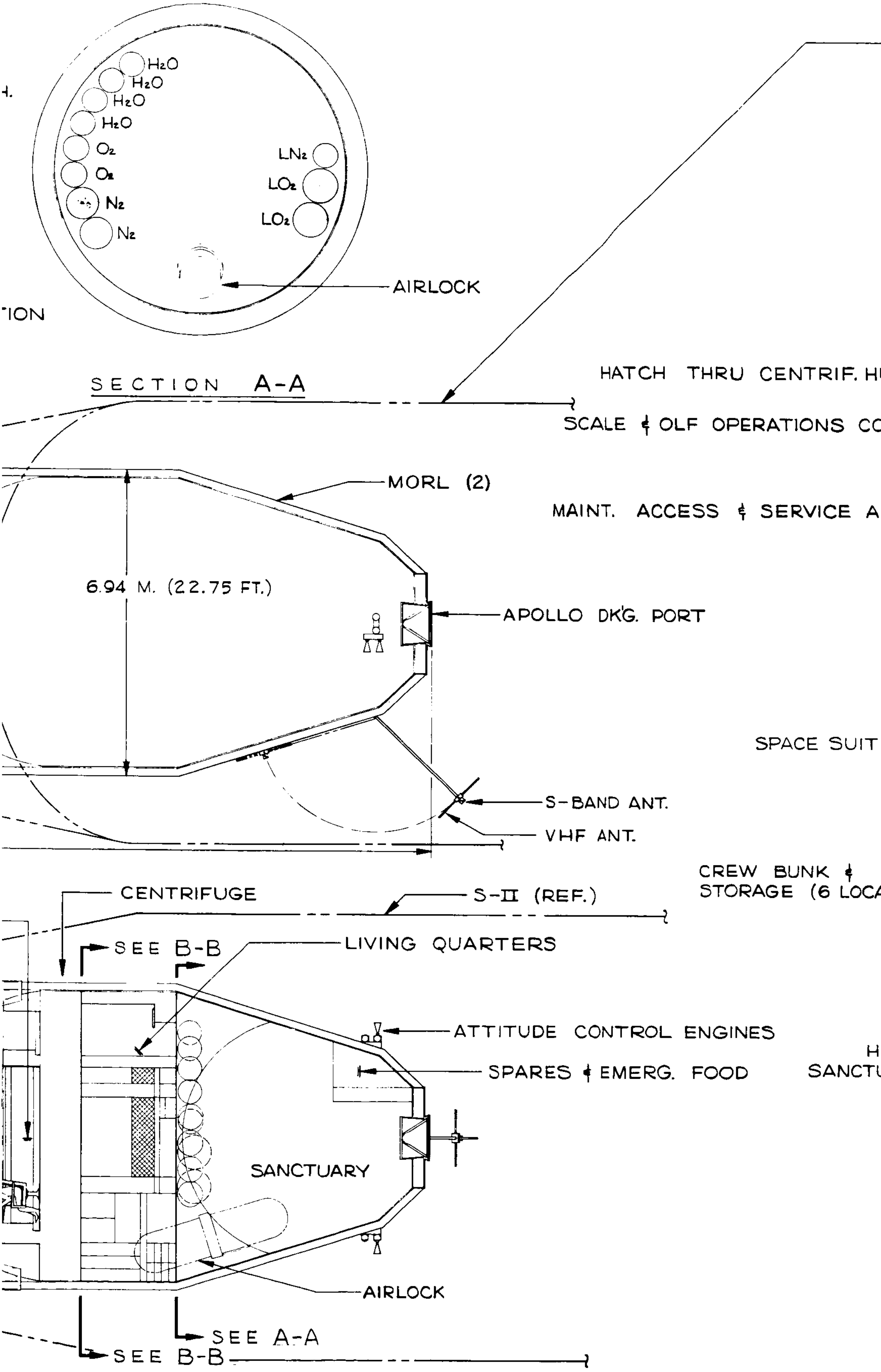
H₂O
H₂O
H₂O
H₂O
O₂
O₂
N₂
N₂
LN₂
LO₂
LO₂
AIRLOCK
H.
TION
SECTION A-A
HATCH THRU CENTRIF. HU
SCALE ¢ OLF OPERATIONS CO
MORL (2)
MAINT. ACCESS ¢ SERVICE A
6.94 M. (22.75 FT.)
APOLLO DK'G. PORT
SPACE SUIT
S-BAND ANT.
VHF ANT.
CREW BUNK ¢
STORAGE (6 LOCA
CENTRIFUGE
S-II (REF.)
SEE B-B
LIVING QUARTERS
ATTITUDE CONTROL ENGINES
SPARES ¢ EMERG. FOOD
H
SANCTU
SANCTUARY
AIRLOCK
SEE A-A
SEE B-B

4

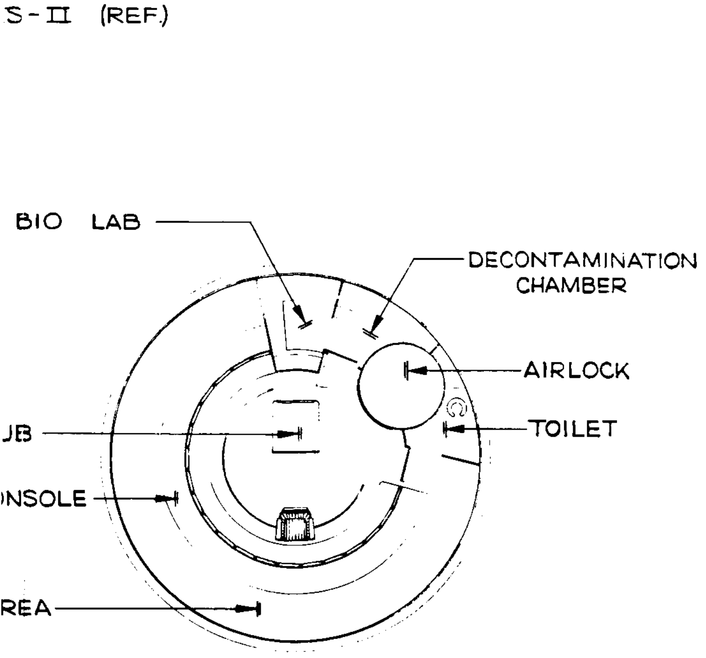

SECTION F-F

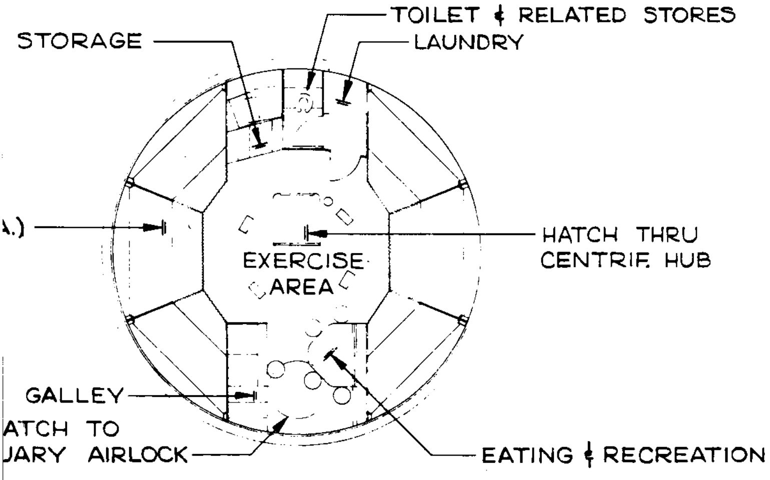

SECTION B-B

Figure 5.3-1
INITIAL ORBITAL LAUNCH FACILITY

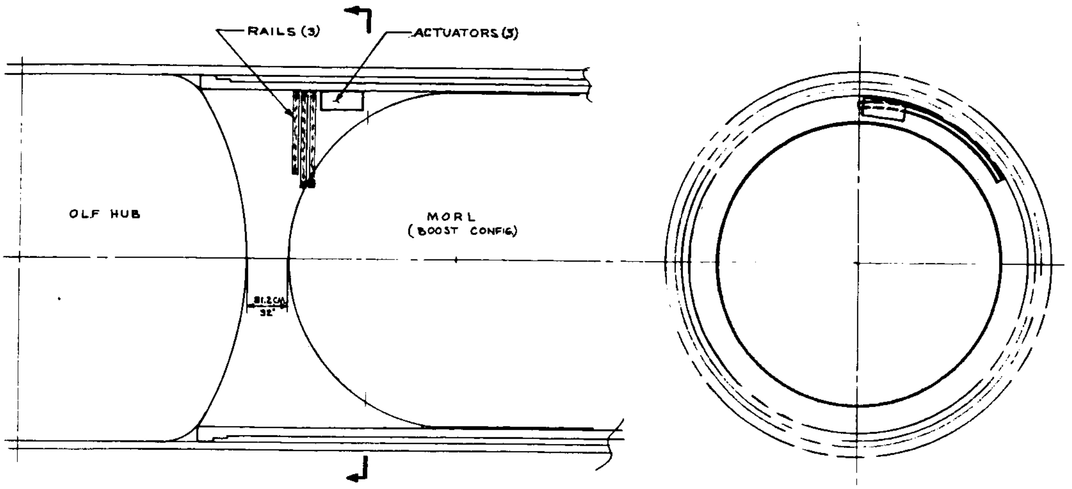

HANGAR DOOR ACTUATORS & RAILS IN STOWED POSITION

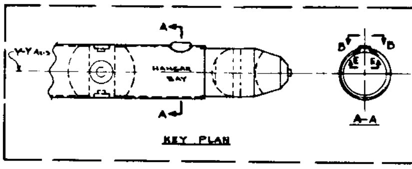

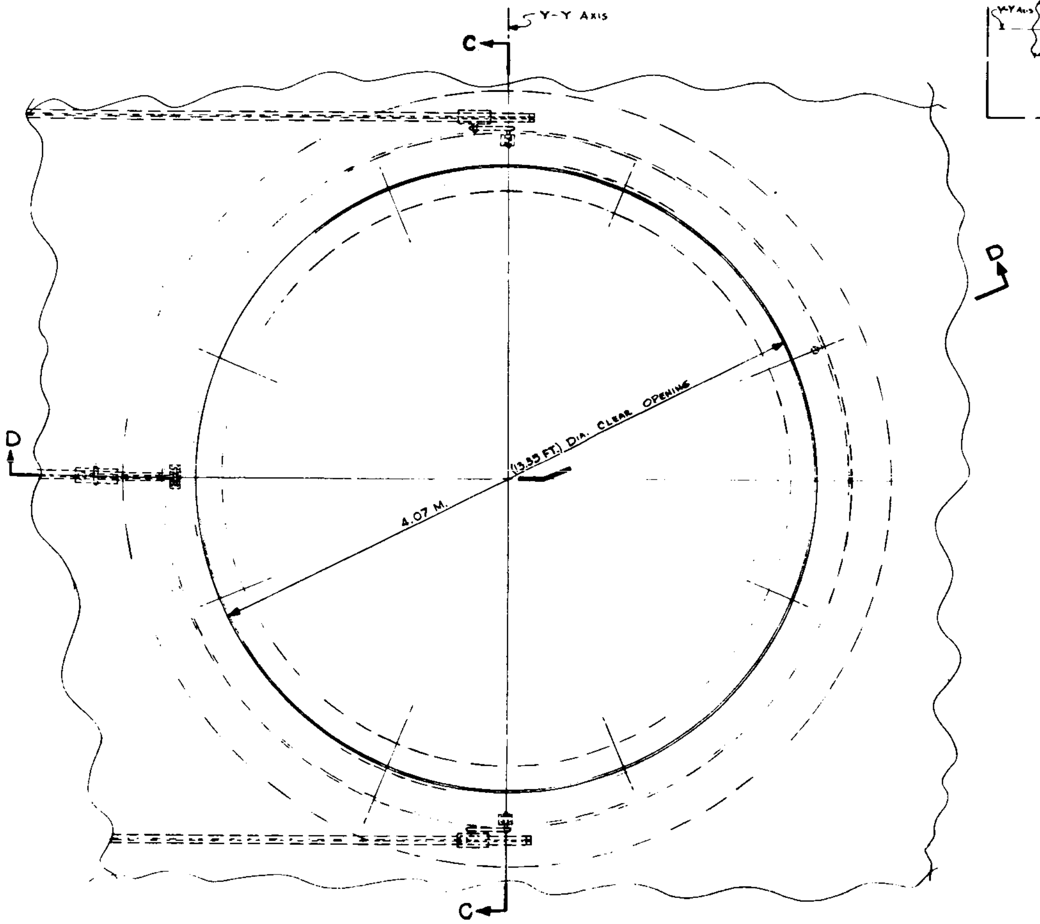

B-B

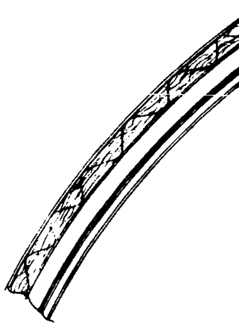

2

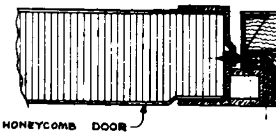

ALTERNATE

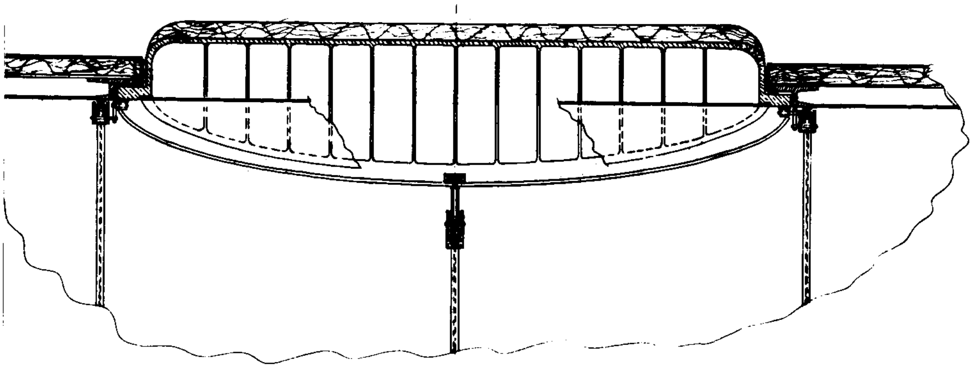

C-C

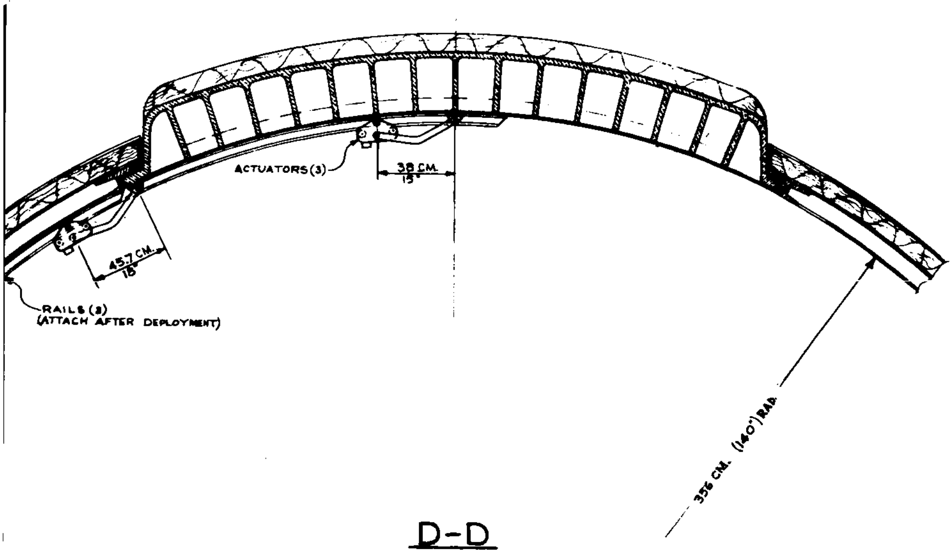

D-D

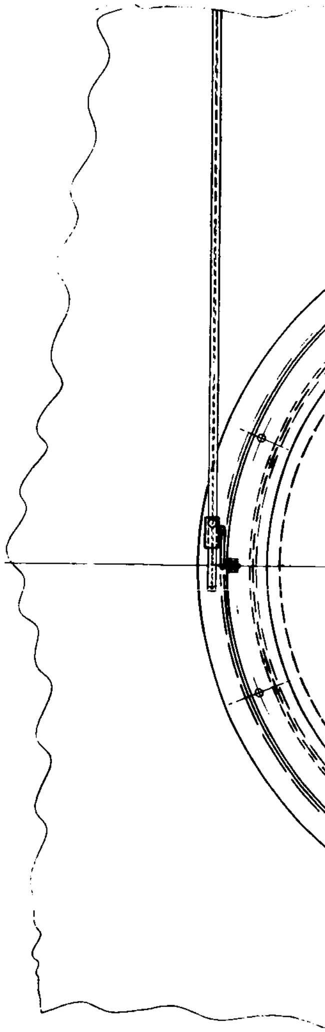

3

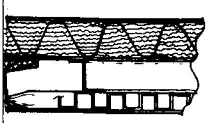

DESIGN

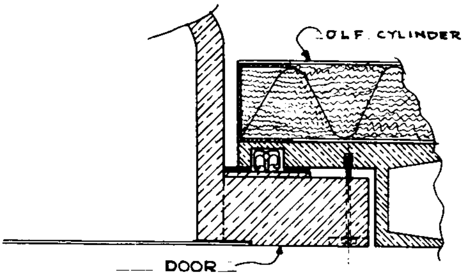

SEAL DETAIL
(REF.: LOCKHEED "STUDIES OF SEALS" #LR 17256)

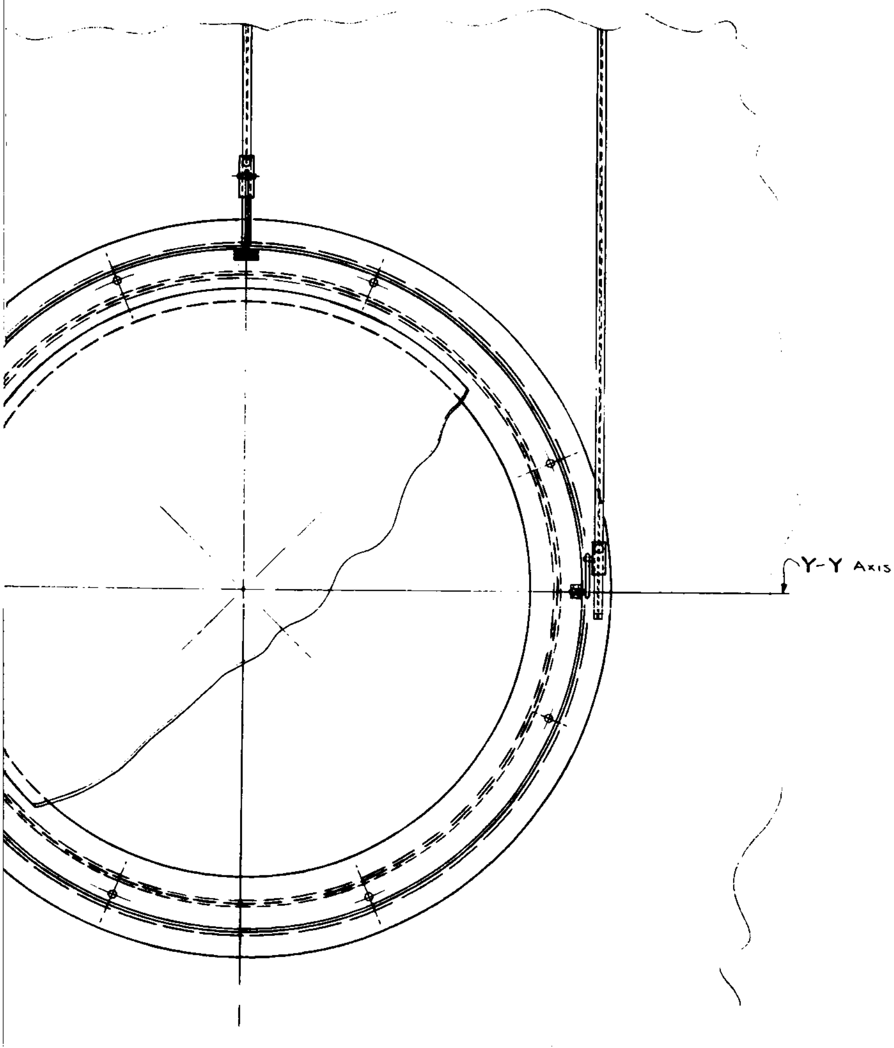

E-E
(ROTATED 90° C.W.)

Figure 5.3-2: HANGAR BAY DOOR

airlock in the docking section of the hub.

Hub. - The hub is located at the center of the OLF and consists of the elevator terminal and the docking section. This is shown in Figure 5.3-3.

a. Elevator Terminal . - The elevator terminal serves as the connection point for the pressurized elevator tubes that come from each MORL. The terminal will be kept pressurized at all times and may be pressurized from either MORL by proper setting of the controls. Three airlocks are located in the terminal; one to permit access to the experiment bay, another to the OLV, and a third to space. When docked, the OLV airlock and access tunnel will mate with the elevator terminal airlock, thus permitting transfer of men and materials in a pressurized environment between OLF and OLV spacecraft. Entrance to the docking compartment from the terminal is through a hatch, requiring that the docking compartment be pressurized prior to entering.

b. Docking Compartment. - The docking compartment is ringed with four docking ports located at the center of the OLF cylinder, spaced at 90°. Two of these are 3.1N (122 in.) in diameter and will accommodate OLVs or LOX tankers. The other two are 1.01N (40 in.) in diameter and dock the Apollo logistic spacecraft. Inside the docking compartment are located the following seven main tanks used to service the OLV and provide propellant for OLF orbit keeping purposes.

Quantity	Fluid	Diameter
1	N_2	1.71 M.
2	H_e	1.14 M.
1	N_2O_4	1.51 M.
1	VDMH	1.51 M.
1	O_2	1.47 M.
1	LN_2	1.01 M.

The nuclear power plant is also located in the docking compartment together with the necessary controls and the mechanism required to remove the gas loop replacement of package. And finally, spares storage of $8.5m^3$ (300 cu. ft.) is provided, which supplements sotres normally carried in the MORLs.

MORLs. - Both MORLs remain essentially unchanged except that the crew compartment has been relocated outboard of the equipment room giving an artificial gravity at the floor level of 0.37. The outer structure has also been changed to provide meteroid protection equivalent to that enjoyed by the structural cylinder. The life support/environmental control system equipment installation has remained unchanged. The Brayton cycle power system as previously noted has been relocated from its MORL position in the skirt area to the OLF hub.

Two hypergol tanks are located under the skirt area outside of the MORL pressure shell. These are used for the reaction control system. Partially pro-

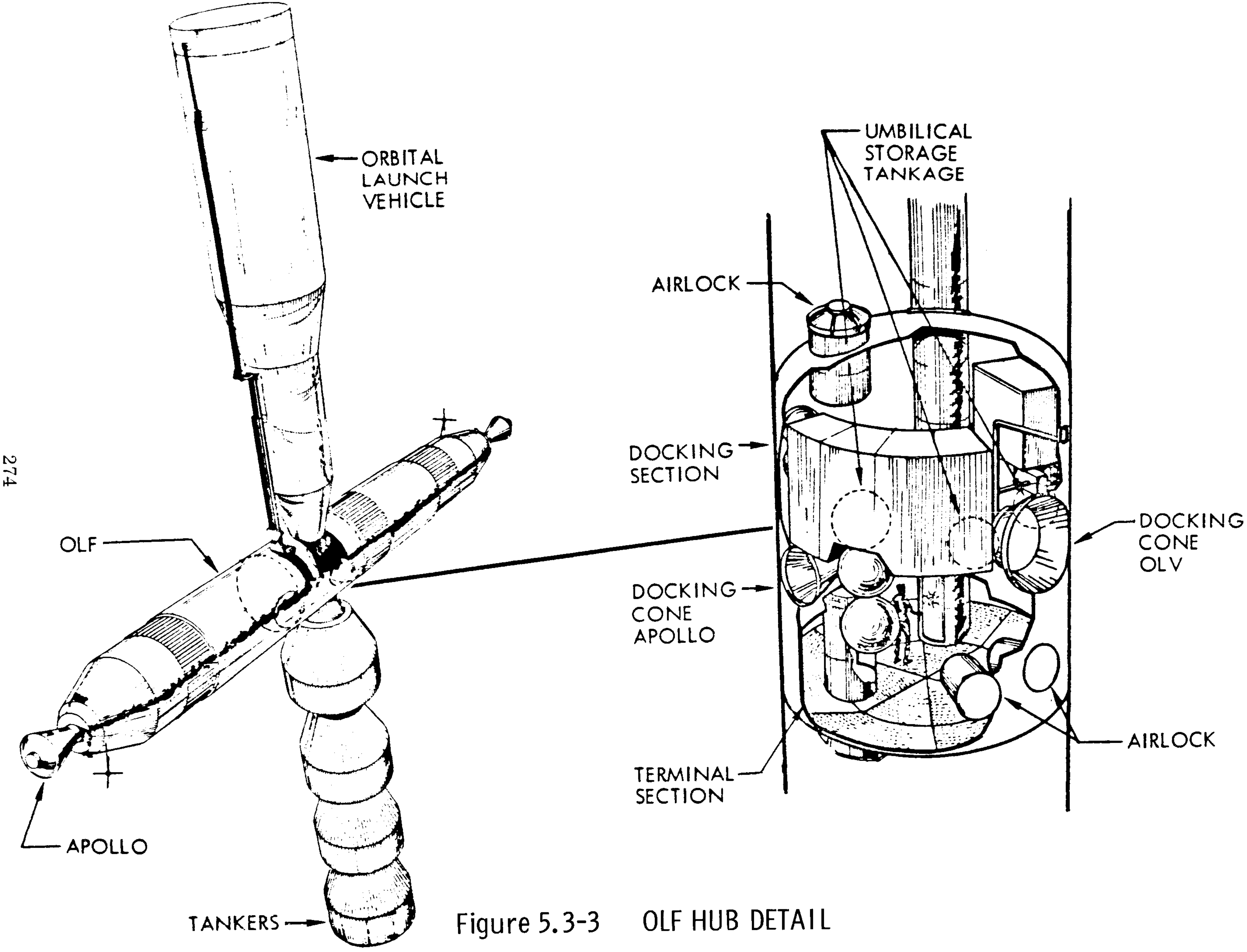

Figure 5.3-3 OLF HUB DETAIL

truding from the pressure shell is the airlock, which has to be modified to adapt to the five-foot elevator tube. This airlock opens into the checkout equipment room in MORL 1 and the shop area in MORL 2. The checkout equipment room contains all consoles and black boxes required to monitor and operate the OLF and perform the orbital launch operations. Equipment is arranged in a circular pattern,as shown in Figure 5.3-4, to allow the crewman on duty full visibility. The shop area contains the necessary tools, equipment, and facilities to accomplish the maintenance and repair of all OLF and integrated systems. Next to the equipment room is located the centrifuge used to physically condition the astronauts. One layer out from the centrifuge is the crew living quarters which are approximately 21.3m (70 ft.) at the floor level OLF center and contain the sanitary facilities, recreational facilities, kitchen facilities, and other related equipment for the comfort and survival of the crew. No details are provided, as this is similar to the standard MORL quarters. Outboard of the crew quarters is what is now referred to as the sanctuary. This is a separately pressurizable compartment which can be used as an emergency survival room in the event of loss of pressure in the rest of the MORL. Access to it from the crew quarters is via an airlock; exit is by an airlock which connects to an Apollo docked as an emergency escape vehicle. When the Apollo is not in place, this airlock may be used for exit into a space environment. In addition to serving as a sanctuary, this compartment contains spares and emergency survival supplies.

Between the sanctuary and the crew quarters are stored the following 11 tanks:

4	Water
2	O_2
2	N_2
1	LN_2
2	LO_2

While no detail design work has been accomplished on the required plumbing system, it is planned that water will be pumped between water tanks of one MORl to the other to compensate for changes in the OLF center of gravity caused by changes in loading and movement of personnel.

Outside each MORL are located eight reaction control engines which are propellants stored in the MORLs. There are two communications antennas on the MORL extension; one VHF and one S-band antenna. A stowage mechanism operated from within the sanctuary is located outside the MORL, and is used to move the Apollo from the docked position to a stowed position and vise versa.

5.3.1.2 OLF Launch Configuration. - In the launch configuration the MORLs are retracted and locked into the structural cylinder, as shown in the upper view in Figure 5.3-1, giving the OLF a total length of 38.6m (126 ft.). An interstage or fairing is attached to the basic cylinder, which serves as an adapter for attaching the Apollo Command Module, which contains the five crew members launched with the OLF. Aft of MORL 2 is the injection propulsion system, which is housed in the interstage between the OLF and the S-II stage of the Saturn V. Inside the

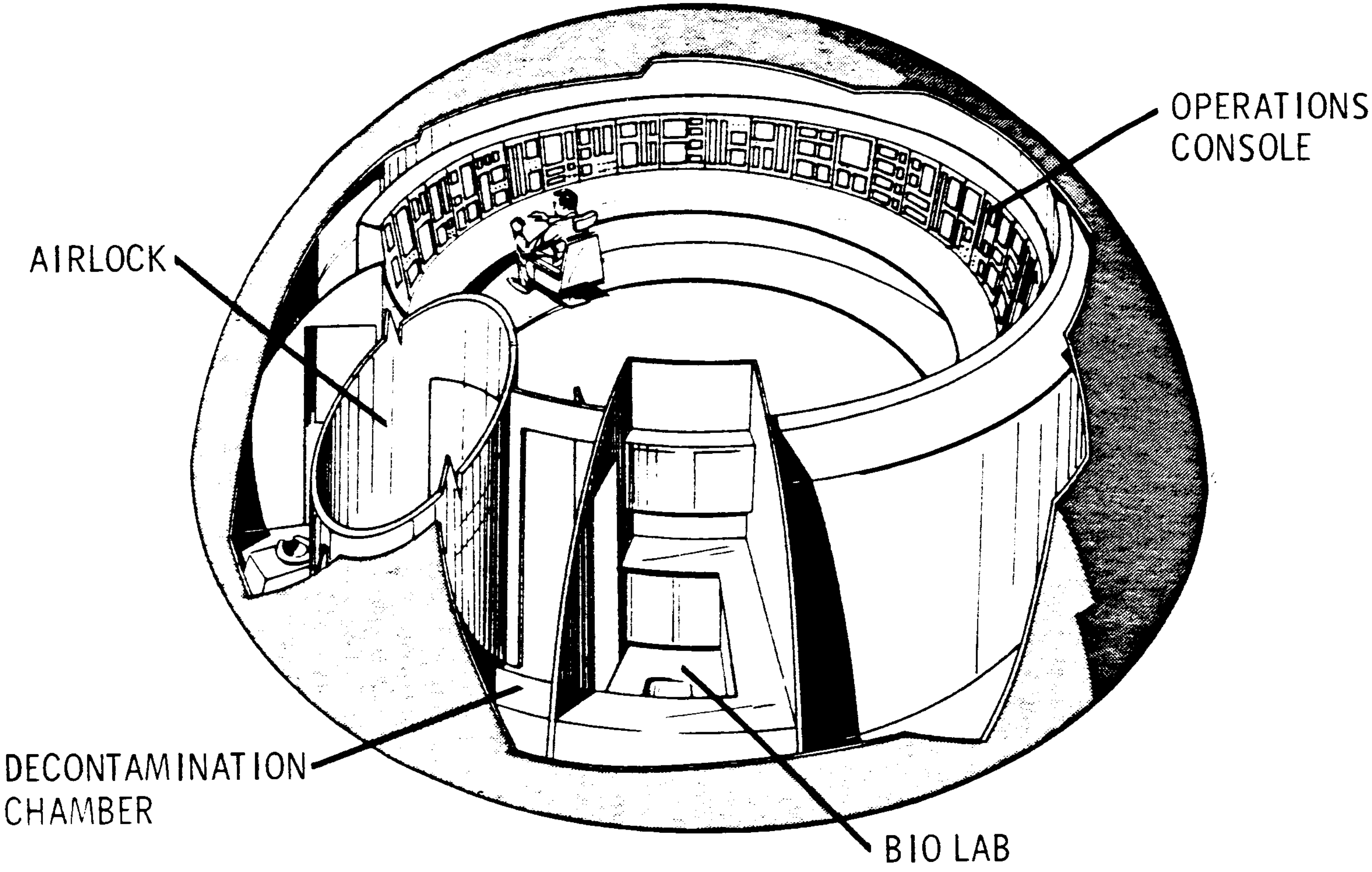

Figure 5.3-4: CHECKOUT CONTROL ROOM

experiment and hangar bays, the elevator tubes have each been telescoped within themselves in such a manner as to allow the MORLs to retract. They will protrude through two airlocks in the hub, which remain open during launch. The umbilical boom is folded under a fairing on the cylinder surface, as are the communications antennas on the MORL surfaces.

Once the OLF has achieved its orbit, the crew members release the command module fairing from the cylinder, and dock the command module and fairing into MORL 1. MORL 1 and 2 systems are activated and the crew enters. The pressure in the extension bottles is released (0.5 psi) and the MORLs are deployed. The crewmen enter first the experiment bay and then the hangar and lock the MORLs into the sealed extended position. At this time the elevator tubes, which have been extended, are mechanically sealed at the slip joint and, when all airlocks are in the proper position, the OLF is pressurized. The next step is to release the injection stage from the cylinder, and to transfer the command module fairing from MORL 1 and attach it to the injection stage; this is performed extravhicularly. The final step is to deorbit both the fairing and the injection stage, which will allow the release of the MORL antennas.

5.3.2 OLF Structural Considerations

5.3.2.1 Structural Criteria. - At the initiation of OLF structural studies, a set of structural design criteria were established. These are based on MORL criteria, current Boeing practice, and current information obtained from Boeing research staffs. The five criteria listed here are not all-inclusive and are not meant to represent the complete set of criteria necessary for the structural design of space-operational vehicles. They are simply those criteria whose definition was required to obtain the structural information presented in this section.

a. Boost Loads. - These criteria are used to define the loads imposed on the OLF boost configuration and the loads which this configuration imposes on the booster during the boost trajectory from liftoff to orbital injection:

Booster -- The booster shall be a Saturn V, consisting of an S-Ic stage and S-II second stage.

Boost Trajectory -- The Apollo boost trajectory shall be used as a baseline with perturbations, due to drag variations and payload mass changes introduced at the critical conditions.

Critical Conditions -- The point of maximum $q\alpha$, i. e., maximum sideload, is assumed to be critical for both booster loads and OLF loads. At this point

$$q = 34.8 \times 10^3 \text{N/m}^2 \text{ (726.7PSF)}; \alpha = 8.55^\circ \text{ (Ref.}$$

Airloads -- For the calculation of aerodynamic lift, the following coefficients and centers-of-pressure shall be applied:

Cones and truncated cones

$C_{L\alpha}$ = 2 (based on maximum x-section)

X_{cp} = 1/3h

Cylinders

$C_{L\alpha}$ = 0.103 (based on planform)

X_{cp} = 2/3h

Drag shall be based on Newtonian flow theory.

S-Ic fin airloads are based on piston theory and are taken from previous studies to be 0.6MN (135,000 lbs.) at the critical condition.

Vehicle Flexibility -- Vehicle flexibility is introduced into the calculation by applying the mode shape specified in Reference 4.

Control Loads -- Engine gimbal shall be such that pitch accelerations are zero.

Gravitational Forces -- Gravitational forces are computed with a flight path angle of 25.5° (Ref. 4).

Dynamic Effects -- To account for dynamic effects, the analytical techniques used was applied to evaluate Apollo loads and the results compared with those obtained from Apollo program documentation. They were found to be 29% low due to the lack of dynamic analysis. Therefore, to obtain more realistic loads, a factor of 1.29 shall be applied to all loads obtained.

Mass Distribution -- A lumped-mass configuration shown in Figure 5.3-5 shall be used for boost loads calculations. Masses shown in parentheses are optional spares. Masses of spares were assigned arbitrarily to determine the parametric effect of various payload masses on vehicle boost loads. Spares of 60,910 kg (134,000 lbs.) the highest value used, represent the maximum capability of the Saturn V booster when combined with 52,730 kg (116,000 lbs.) payload inert mass. Stations refer to Saturn V vehicle stations.

b. Primary Structure. - Criteria on primary structure define the factors of safety on design loads and pressures, the source utilized for obtaining materials properties, and the combinations of conditions which are critical.

Factors of Safety -- The following factors of safety shall be applied in the structural sizing of components:

Loads:

Limit Load = Maximum expected load

Ultimate Load = 1.4 times limit load

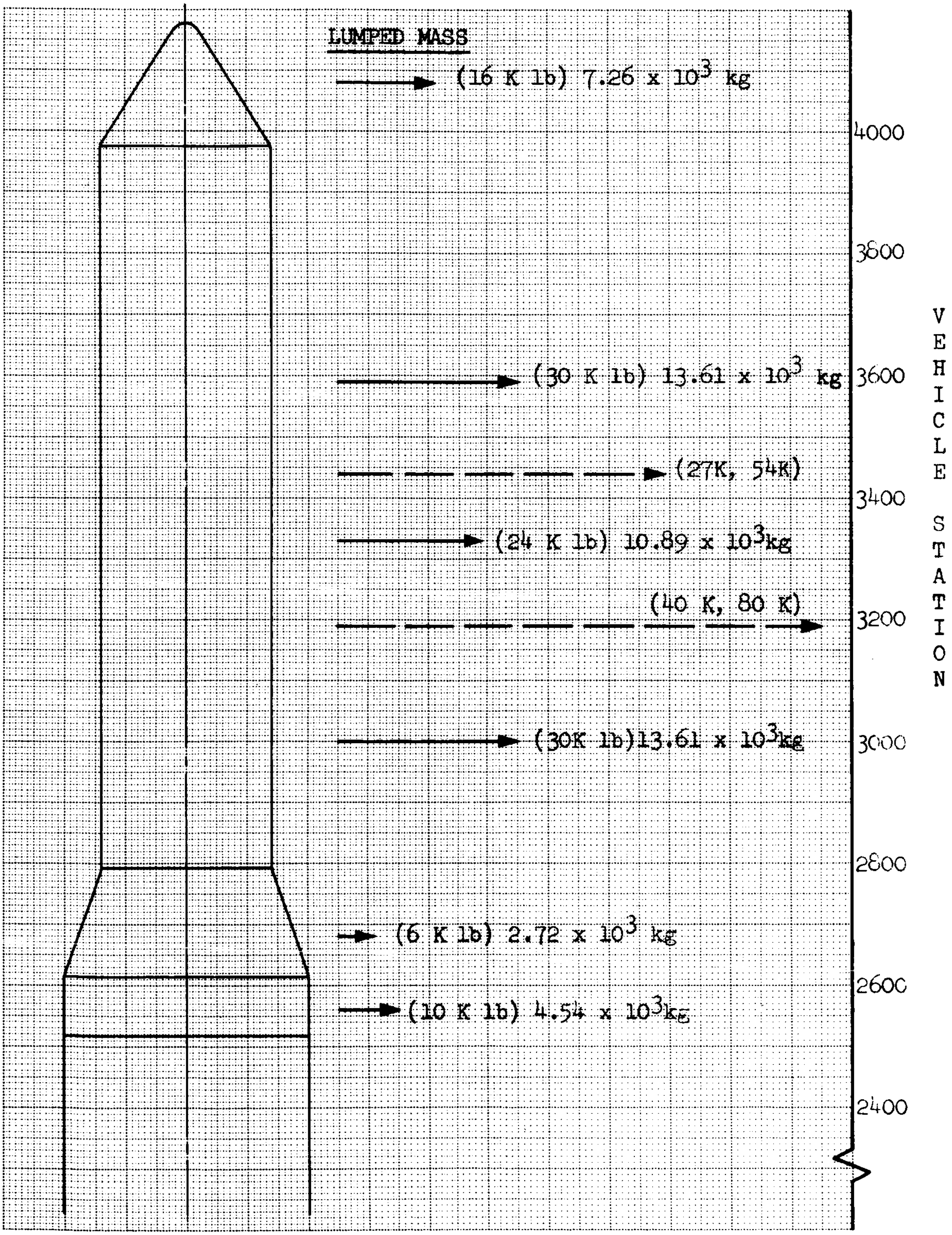

Figure 5.3-5: ASSUMED OLF LUMPED MASS CONFIGURATION

Pressures (manned compartments):

Limit Pressure = 1.66 times maximum expected pressure in one "g" environment

Limit Pressure = 1.33 times maximum expected pressure in flight environment

Ultimate pressure = 1.5 times limit pressure

Material Properties -- Material properties shall be taken from the Boeing design manuals where applicable. In other cases, the responsible Boeing research staff shall be consulted.

Critical Conditions -- Critical conditions are those loads or combinations of loads which produce the maximum level of stress without violating failure criteria. Failure under limit conditions is defined as permanent deformation greater than 0.2%. Failure under ultimate conditions is defined as the inability to carry any additional load. When pressure acts in combination with other loads to relieve those loads, no factors will be applied to the pressure.

c. Meteoroid Shielding. - Meteoroid shielding criteria define the meteoroid environment, including fluxes, velocities, densities, distributions, and flux blockage; they define the relationship of environment to penetration of single shields, multiple shields, and low density fillers; they specify the exposure times, orbital altitude, definition of damage, and probability that no damage will occur.

Fluxes - Sporadic meteoroid flux (Ref. 5) shall be given by

$\Phi_s = 10^{-10.423} m^{-1.34}$ where

Φ_s = number of particles larger than mass m striking unit area (ft.^{2}) in unit time (day).

m = mass in grams,

or $\Phi_s = 10^{-14.328} m^{-1.34}$ with $A \sim m^2$ and time in sec.

Shower meteoroid flux is taken from Reference 5 and smoothed over time and angular distribution. Shower flux is thus 0.173 times the sporadic flux specified above.

Total design meteoroid flux shall be:

$$\Phi_o = \Phi_s + 0.173\,\Phi_s$$

Velocity -- Velocity of meteoroids shall be taken as 30 km/sec. (100,000 ft/sec) (Ref. 5).

Density -- Density of meteoroids shall be taken as 0.50 gm/cc. (Ref. 5).

Distribution of Masses -- Meteoroid masses are assumed to obey a Poisson distribution

$$P(n) = \sum_{K=0}^{n} \frac{e^{-N} N^{K}}{K!}$$

where

$P(n)$ = Probability of n or fewer occurrences

N = Cumulative mean number of encounters of mass m or larger = $\Phi A \tau$

Φ = Φ_o above

A = Exposed area

τ = Exposure time

Flux Blockage -- The ratio of impinging flux to the design flux listed above shall be given by:

$$\Phi_i / \Phi = \frac{1+\cos\theta}{2}$$

where

θ = Half-angle of cone subtended by Earth

$\sin\theta$ = R_o/R_o+h

R_o = Earth Radius = 6,371.23 km (3,437.87 n. mi.)

h = Orbital altitude above surface

Single Sheet Penetration -- Penetration of meteoroids into single sheets shall be governed by: (Ref. 6).

$$t_{ss}/D = 3.42 \ (\rho_p/\rho_t)^{2/3} (v/c)^{2/3}$$

Where

t_{ss} = Shield thickness which is just penetrated (with spallation)

D = Diameter of meteoroid

ρ_p = Density of meteoroid

V = Velocity of meteoroid

ρ_t = Density of shield

C = Speed of sound in shield material = $\sqrt{E/\rho_t}$

E = Young's modulus of shield material

Multi-sheet Penetration -- Penetration of multi-sheet barriers is governed by (Ref. 7).

$$N = K\left(\frac{T_1+T_P}{T_2}\right)\left(\frac{\rho_1+\rho_P}{\rho_2}\right)^{1/2}\left(\frac{t_1}{t_2}\right)^{1/3}\left(\frac{V}{C}\right)^{-4/3}\left(\frac{D}{t_2}\right)^{1/4}$$

Where

N = Number of aluminum sheets penetrated in addition to a bumper (any material).

K = Empirical constant

T_1 = Bumper melting temperature (absolute)

T_2 = Aluminum melting temperature (absolute)

T_p = Meteoroid melting temperature (absolute)

ρ_1 = Bumper density

ρ_2 = Aluminum density

ρ_p, V, C, D = Previous definitions

t_1 = Bumper gage

t_2 = Gage of each aluminum sheet (equal)

Low- Density Filler -- The inclusion of low-density filler behind the bumper or second sheet modifies the above equation as follows:

$$N_f/N = 1-0.9\,{}^{S_f}\!/_{D}\left[1+113\left({}^{\rho_f}\!/_{\rho_1}\right)^2\right]f(V/C)$$

Where

N_f = Number of aluminum sheets penetrated with filler

N, D, ρ_1, V, C = Previous definition

S_f = Depth of filler

ρ_f = Density of filler

$f\left(\frac{V}{C}\right)$ = 0.0164 for $V/C \geq 1.6$

Exposure Time -- The OLF system shall be designed for a total exposure time of five years.

Orbital Altitude -- Orbital altitude of the OLF shall be 535 km (289 n. mi.).

Damage -- Continuously pressurized areas shall be shielded such that no damage to the pressure-carrying wall shall occur at the design probability of success for the design life. Thus, in the Poisson distribution equation, $n = 0$ and

$$P(0) = e^{-N}$$

Intermittently pressurized areas shall be shielded such that no damage to the pressurized wall will occur at the design probability of success for the individual times of pressurization. Repair capability is assumed for all other times. Barring repair, such areas shall be treated as if they were continuously pressurized. Unpressurized areas shall be unshielded unless: (1) they contain critical systems; (2) they are used as shelters or operating areas by crew members for cumulative times such that personal shielding (spacesuit) is inadequate; or (3) they have functions which would be irreparably destroyed by penetration (waveguides, etc.).

Probability of Success -- The integrated probability of the meteoroid shield system performing its design function shall be 0.99. The distribution of probabilities to individual areas shall be defined by:

$$P(0)_i = 1 - \frac{A_i}{A}\left[1 - P(0)\right]$$

Where

$P(0)_i$ = Probability of no punctures in area A_i

A = Total exposed area

$P(0)$ = 0.99

d. Thermal Control. - Thermal control system criteria specify the sources of material thermal properties, the thermal environments of manned compartments, and the requirements for thermal balance. No factors of safety will be applied to thermal design.

Sources of Data -- Material thermal properties shall be taken from Boeing design manuals where applicable. In other cases, the responsible Boeing research staff shall be consulted.

Thermal Environments -- The thermal environments of manned compartments shall be controlled to avoid discomfort and hazard to man for shirtsleeve operations. Interior walls shall undergo no termperature extremes above 339°K (150°F) or below 278° K (40°F).

Thermal Balance -- The parameters of heat transfer through the OLF external walls shall be chosen such that the net heat gain or loss per orbit shall be within the capabilities of environmental control for achieving thermal balance.

e. Emergency Operational Provisions. - Emergency operations, including pressurization system malfunctions, leakage, and damage due to mishandling or explosion, shall be considered in the design of systems, but shall not penalize the primary structure.

Pressurization System Malfunctions -- Pressurization system malfunctions, which may produce overpressures or loss of pressurization, shall not be applied as design conditions on pressure unless the critical pressure is below venting capability vessels. It is assumed, therefore, that vent valves will be used to control pressure differentials such that the inherent overpressure capability of bulkheads will suffice.

Leakage -- Hatches shall be provided in suitable locations to minimize the effects of leakage in emergency situations. Thus, no provisions for self-sealing walls will be made.

Damage -- No additional structure shall be provided to eliminate the effects of damage due to mishandling or explosion. A repair capability is assumed.

5.3.2.2 Loads. - Threee sets of loading conditions exist for the OLF; ground handling loads, launch environment loads, and operational loads. No attempt was made in this study to define or apply ground handling loads. Fabrication sites are uncertain, resulting in undefined transportation and assembly requirements.

Typical boost load conditions were studied. Some boost load factors are listed for several conditions. These are adapted from previous studies (Ref. 8) of Apollo loads.

	LOAD FACTOR	
CONDITION	AXIAL	LATERAL
Rebound	+1.38, -2.83	± 0.25
Postrelease	+0.73, -3.23	± 2.91
Thrust cutoff	± 4.90	± 0.10
Engine Hardover	-2.25	± 1.16

These conditions are primarily due to booster characteristics and will, to a first approximation, be insensitive to payload design. Within the limits of this study, therefore, no attempt was made to obtain refined load values for these conditions. The condition of maximum airloads (approximately 71 seconds after launch) is, on the other hand, strongly affected by payload inertial and geometric conditions. As such, it was given special attention and is described in a separate section.

Operational loads consist of pressure conditions, docking loads, and external loads in orbit. The maximum pressure condition for manned compartments is $48.26 \times 10^3 N/_{m^2}$ (7.0 psi). Pressurization schedules, described in Paragraph 4.2, were used to define pressure bulkhead requirements. Docking loads are dependent upon the characteristic load-stroke of the energy dissipating system. By providing sufficient stroke, docking loads may be made arbitrarily small. Primary structure has the capability for 2.524 MN (567,500 lbs.) docking loads. External orbital loads consist of gravity gradient torque, aerodynamic drag, radiation pressure, and allied effects. These are all negligibly small in structural design.

Maximum Airload Condition -- Structural loads were calculated for the condition of maximum airloads (wind shear at $q\alpha$ = maximum). These consist of axial loads due to drag in combination with thrust and inertia, and bending moments arising from aerodynamic lift. Bending moment variations with vehicle station are shown in Figure 53.-6 for each of three payload masses. Lack of inertial relief makes the bending moments increase with decreasing payloads. At the critical condition,

$$q = 34.8 \times 10^3 \text{ N/m}^2 \text{ (726.7 PSF)}, \alpha = 8.55^\circ.$$

Axial load distributions were not calculated as part of this study. Rather, axial loads were calculated only for those stations known to be critical. At station 2400, the critical station for S-II, these loads are:

PAYLOAD MASS	AXIAL LOAD
52,620 kg (116,0001bs.)	1.486 MN (334,000 lbs.)
83,000 kg (183,000 lbs.)	2.077 MN (467,000 lbs.)
113,400 kg (250,000 lbs.)	2.651 MN (596,000 lbs.)

At Station 2794, the point of maximum launch load on the OLF, the axial loads are:

PAYLOAD MASS	AXIAL LOAD
52,620 kg (116,000 lbs.)	1.338 MN (300,700 lbs.)
83,000 kg (183,000 lbs.)	1.933 MN (434,600 lbs.)
113,400 kg (250,000 lbs.)	2.496 MN (561,200 lbs.)

And at Station 3250, the point just below the hub area:

PAYLOAD M SS	AXIAL LOAD
52,620 kg (116,000 lbs.)	1.060 MN (238,300 lbs.)
83,000 kg (183,000 lbs.)	1.295 MN (291,100 lbs.)
113,400 kg (250,000 lbs.)	1.523 MN (342,300 lbs.)

The primary structure of the OLF is sized by a combination of axial load and bending moment which produces a compressive stress in the structure. The loads are combined by using:

$$N = \frac{Pa}{2\pi R} + \frac{M}{\pi R^2}$$

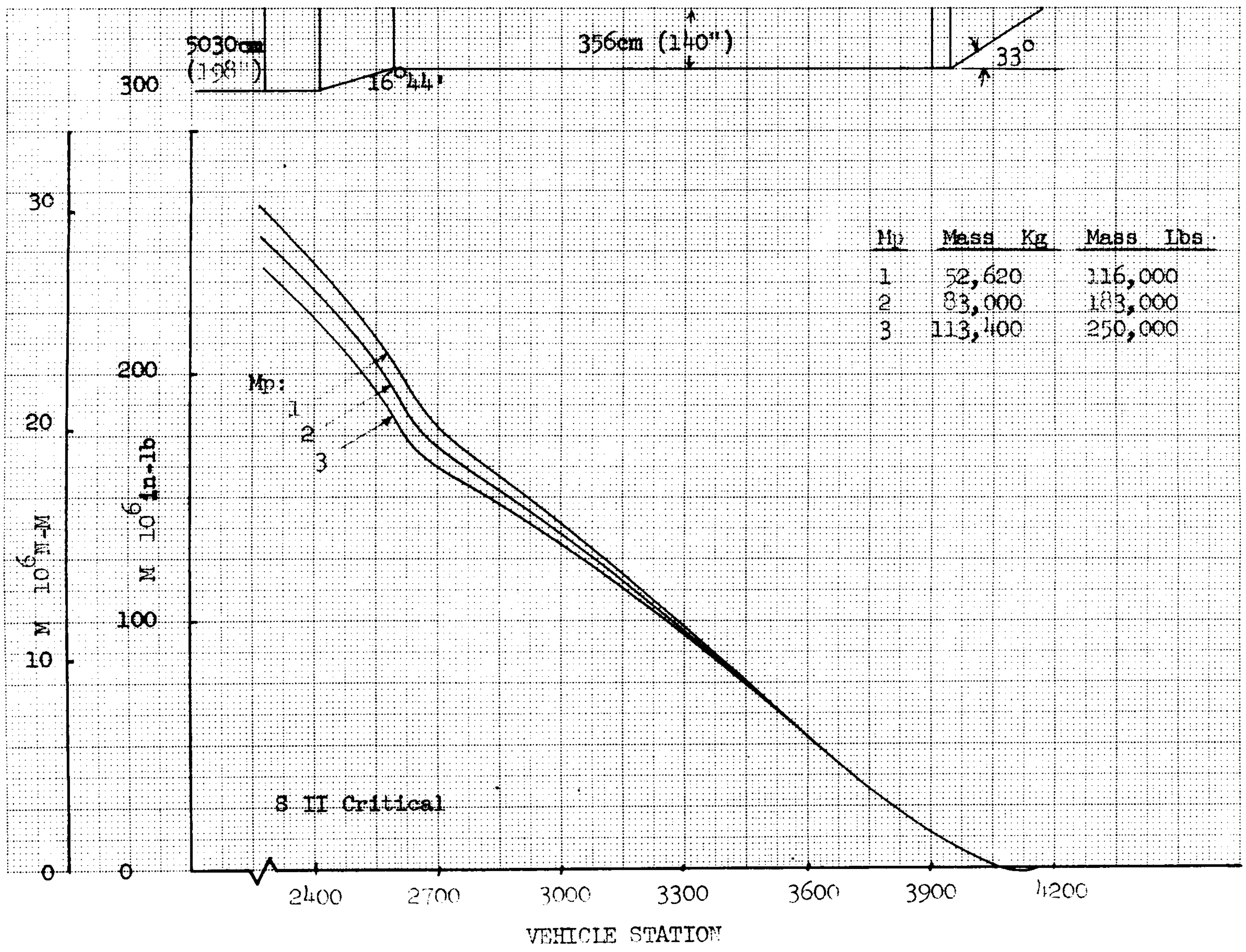

Mp	Mass Kg	Mass Lbs
1	52,620	116,000
2	83,000	183,000
3	113,400	250,000

Figure 5.3-6 S II MAX qα WIND SHEAR MOMENT

Where

N = Running load ~ Force/Length

P_a = Axial Load ~ Force

M = Bending moment.

R = Local radius of primary structure.

Using this equation, running loads for each payload and the three significant vehicle stations are:

PAYLOAD MASS	RUNNING LOAD ~ MN/m		
	STA 2400	STA 2794	STA 3250
82,620 kg(116,000 lbs.)	0.895(2258 lb/in)	0.532(3038 lb/in)	0.346(1977 lb/in)
83,000 kg(183,000 lbs.)	0.399(2276 lb/in)	0.539(3076 lb/in)	0.351(2004 lb/in)
113,400 kg(250,000 lbs.)	0.400(2282 lb/in)	0.547(3123 lb/in)	0.350(1997 lb/in)

The critical load for the S-II vehicle at Station 2400 is found from MSFC documentation (Ref. 9) to be 0.403MN/m (2300 lb/in) ultimate with a 1.25 safety factor. The equivalent limit load is 0.322 MN/m (1840 lb/in). It can be seen by comparison with the above loads that the structural capability of the current S-II design will be exceeded by the OLF boost vehicle, regardless of payload. Two solutions are available. First, structural modifications can be made to the S-II. Since the critical structural area is the S-II forward skirt, structural modification requires only minor gage changes to increase allowables. The second approach is one of restricting the OLF launch window to reduce the extremity of wind shear. Studies indicate that the acceptable launch window with current S-II design forbids 44 days out of each year.

5.3.2.3 Primary Structure. - The primary structural elements of the OLF consist of a cylinder 7.14 m(281 in.) I. D. and 28.65 m (1128") overall length, and pressure bulkheads designed as segments of the S-Ic ellipsoidal heads.

Materials -- In the choice of materials for the OLF primary structure, technical feasibility and suitability of manufacturing processes were emphasized over weight efficiency. Pressure vessels and pressurized structural elements are constructed of 2219 aluminum. This material has two advantages for pressure vessel application; it is easily formed and welded, and it is not subject to dynamic fracture such as could occur from meteoroid penetration. This alloy is also employed in other areas where welding is used as a joining technique. Standoffs for meteoroid bumper walls are fabricated from fiberglass-epoxy laminate; used because of its superior thermal conduction properties. Further thermal control is accomplished with fiberous insulating material of the glass wool type.

Structural Configuration -- Two structural configurations were investigated for the OLF primary structural cylinder -- ring-stiffened honeycomb sandwich and corrugation-stiffened semimonocoque. Optimization techniques were applied to each concept to define minimum weight designs.

The honeycomb sandwich was sized for overall cylinder buckling, assuming that a $48 \text{kg}/\text{m}^3$ ($3 \text{ lb}/\text{ft}^3$) core will provide adequate face stabilization. "Convair" cylinder allowables were used.

$$F_{cc}/E_e = \left[7.8(t_e/R)^{1.6} + 0.138\,(te/L)^{1.3} \right]$$

Where

F_{cc} = Critical buckling stress.

E_c = Young's Modulus of an equivalent monocoque shell

t_e = Gage of an equivalent monocoque shell

L = Frame spacing

Converting the honeycomb to an equivalent monocoque shell

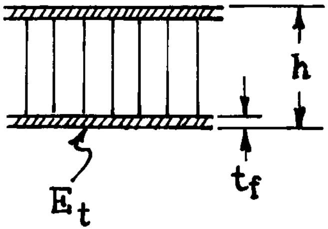

$$E = E_t$$
$$I = t_f h^2/2$$
$$A = 2t_f$$

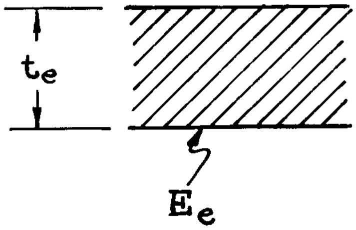

$$E = E_e$$
$$I_e = t_e^3/12$$
$$A = t_e$$

Equivalence is given by

EI = EeIe

EA = EeAe

which gives:

$$te = h\sqrt{3}$$

$$Ee = 2E_t\ tf/h\sqrt{3}$$

Rings are sized by Shanley's ring criterion, assuming $I_R = 2A_R^2$ which yields

$$A_R = 6.08 \times 10^{-6} R^2 \sqrt{\frac{N}{L}}$$

Where

A_R = Cross-section area of aluminum ring ~ in^2

R, N, L = Previous definition

Optimization yields:

$$\bar{t} = \frac{N}{F_{cc}} + \frac{6.08 \times 10^{-6} R^2 \sqrt{N}}{L^{3/2}} + 0.0172 \left[\left(\frac{413.7}{L^{2.6}} + \frac{250 F_{cc}^2}{N E_t} \right)^{1/2} - \frac{20.3}{L^{1.3}} \right]^{10/3}$$

Where

$\bar{t}$ = Effective weight gage of wall (include face sheets, core, and rings).

Fcc = Operating stress produced by N.

E_t = Tangent modulus associated with Fcc.

This expression is numerically optimized on L and Fcc.

For comparison with the semimonocoque structure, the honeycomb was sized at Station 2794. The theoretical optimum honeycomb has no intermediate rings. However, the required honeycomb depth, h = 15.25 cm (6 in.), is unreasonably high. At this point, the weight gage is t = 0.732 cm (0.288 in.)'.

Comprising the design to certain reasonable depth yields the following parameters:

h = 4.93 cm (1.94 in.)

t = 0.300 cm (0.118 in.)

L = 126 cm (49.5 in.)

t = 0.7409 cm (0.2917 in.

Thus, a practical design involves a weight penalty of 1.2%.

Corrugated Semimonocoque -- The corrugated semimonocoque configuration shown below is sized for overall cylinder buckling, local column buckling, and local crippling.

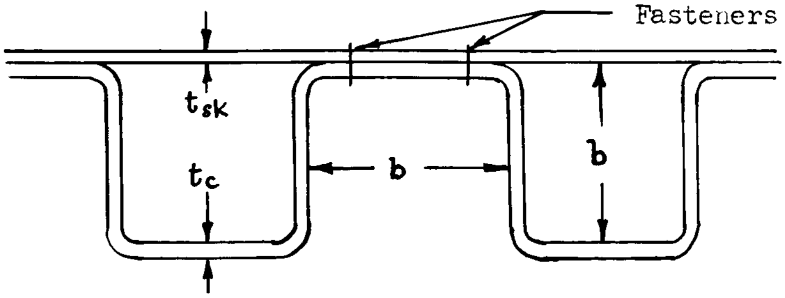

Fastener edge margin is accounted for. Corrugation depth equals height from consideration of local crippling.

Analysis gives:

$$\bar{t} = \beta + R^2\sqrt{\frac{N}{E_f}}\,\frac{f(\alpha)}{(\beta - 0.212\alpha)^{3/2}}$$

Where

β = N/Fcc

α = $\sqrt{Fcc/3.62E_t}$

E_f = Young's Modulus of frame

$f(\alpha)$ = Given in Figure 5.3-7

$\bar{t}$, R, N, E_t, Fcc = Previous definition

This equation is optimized on Fcc. At Station 2794, the structure optimizes for the following parameters:

Fcc = 203.4 MN/m^2 (29,500 psi)

L = 35.6cm (14 in.)

t_c = 0.102cm (0.040 in.)

tsk = 0.163cm (0.064 in.)

b = 3.38cm (1.33 in.)

$\bar{t}$ = 0.4641cm (0.1827 in.)

By comparison with the honeycomb sizing, the corrugated semimonocoque structure is seen to be more efficient. It also has the advantages of being easier to fabricate, join, and attach to. The corrugated structure was thus chosen for OLF application. It is manufactured with frames and corrugations outside the pressure skin to provide a smooth interior surface for MORL deployment.

To complete the cylinder sizing, the structure was examined at Station 3250. At this point, the optimum structure is given by:

Fcc = 158.6MN/m^2

L = 45.72cm (18 in.)

tc = 0.086cm (0.034 in.)

tsk = 0.132cm (0.052 in.)

b = 3.556cm (1.4 in.)

$\bar{t}$ = 0.3576cm (0.1408")

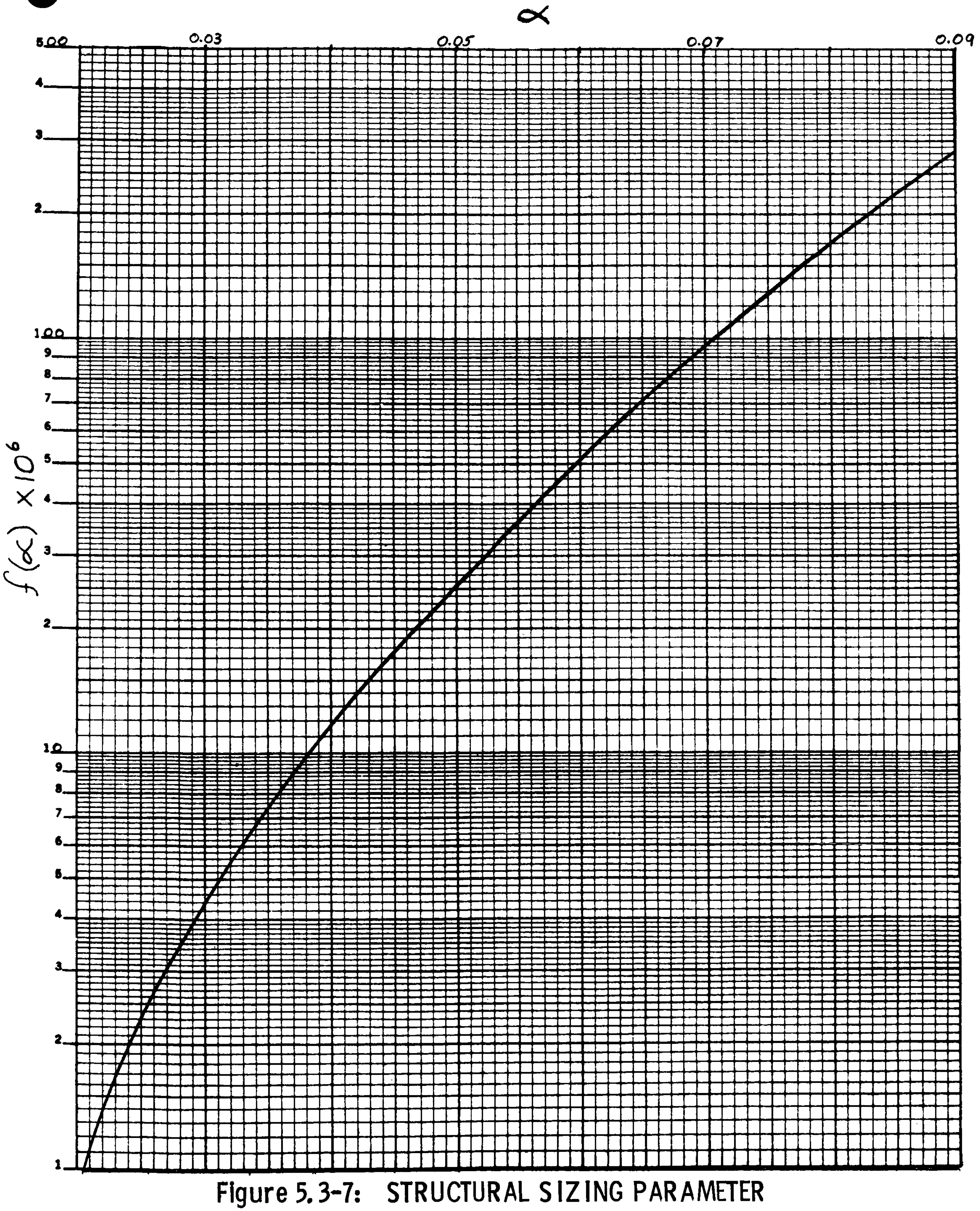

Figure 5.3-7: STRUCTURAL SIZING PARAMETER

For ease of fabrication, and to meet pressurization requirements, tsk and b are taken as constant; tsk = 0.191cm (0.075 in.), b = 3.38cm (1.33 in.). Corrugation gage is tapered linearly between Station 2794 and Station 3250. For balance, the structure is made symmetrical about the OLF hub.

Pressurization Requirements -- For the primary structural cylinder, using an as-welded allowable for 2219 of 179.3 MN/m^3 (26,000 psi), the wall gage to carry 48.3×10^3 N/m^2 is 0.1905cm (0.075 in.). Pressure heads fabricated to the specified contour, $x^2 + 2y^2 = 502.9^2$~cm ($x^2 + 2y^2 = 198^2$~in.) have a required gage of 0.198cm (0.078 in.) when welded 2219 aluminum is used. Local gage increases will be required in the region of the head-wall intersection to accommodate the local discontinuity stresses.

5.3.2.4 Meteoroid Shielding. - Because of its long orbital life requirements, the OLF must have extensive meteoroid shielding to prevent irreparable damage to systems and undue hazard to man. Although weight is not an item of critical importance in OLF design, meteoroid shielding requirements in terms of areas to be protected are such that high shield weight efficiencies must be obtained to avoid inert weights which exceed booster capabilities. For this reason, the problem of designing OLF shielding was studied in some depth. This section presents the results of shielding studies in terms of flux blocked by the Earth, the design meteoroid masses, the assignment of survival probabilities, the type of shielding applied, the numerical results of sizing studies, and the compromises required to produce feasible designs. Figure 5.3-8 shows the critical areas on the OLF requiring meteoroid protection.

Flux Blockage -- Referring to the meteoroid criteria section, 5.3.2.1-c, with

R_o = 6371.23 km (3437.9 n. mi.)

h = 535.2Km (289 n. mi.)

The flux blockage is given by:

$$\Phi_i/\Phi = 0.693$$

Design Meteoroid Masses and Probabilities -- Combining flux data, blockage, and mass distribution gives, for the mass of the largest meteoroid, which will strike area A in time τ for a probability of P(o):

$$m = 10^{-10.76}\left[\frac{A\tau}{1-P(O)}\right]^{0.746} \quad \sim \text{A in } m^2$$

$\sim$ τ in sec.

$$m = 10^{-7.85}\left[\frac{At}{1-P(O)}\right]^{0.746} \quad \sim \text{A in } in^2$$

$\sim$ τ in sec.

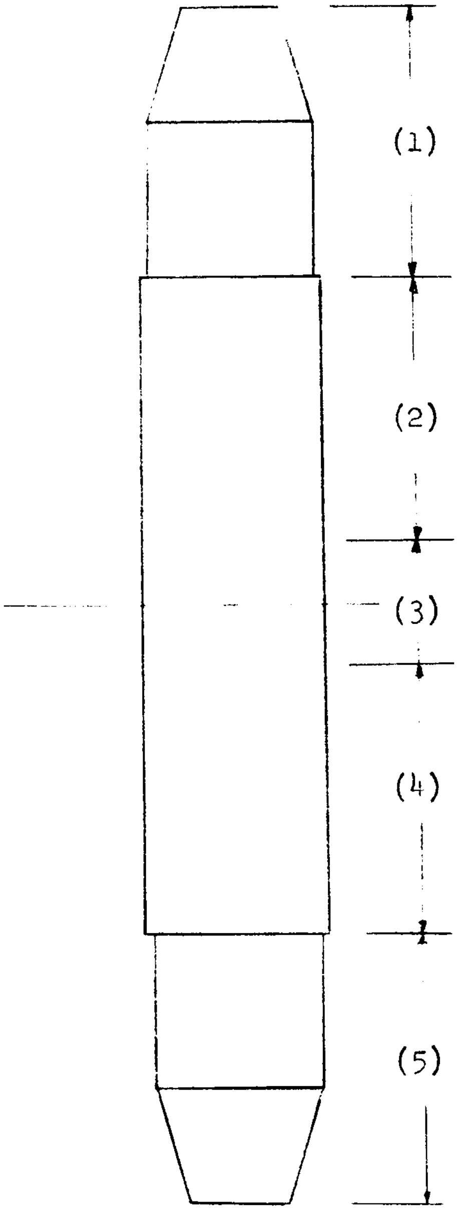

LOCATION	DESCRIPTION
(1)	Exposed MORL
(2)	Experiment Bay
(3)	Hub
(4)	Hangar
(5)	Exposed MORL

LOCATION	AREA Ft^2	M^2
(1)	2490	231.3
(2)	2642	245.4
(3)	1637	152.0
(4)	2642	245.9
(5)	2490	231.3
Total	11901	1105.5

Figure 5.3-8: CRITICAL AREAS REQUIRING METEOROID PROTECTION

For an overall probability of no penetrations of 0.99 and with

$$A = 1105.5 m^2 \ (11{,}901\ ft^2)$$

$$\tau = 1{,}825 \text{ days}$$

The design meteoroid mass is:

$$m = 10^{-7.85} \left[\frac{(11901)(1825)}{1-0.99}\right]^{0.746}$$

$$= 10^{-0.885} = 0.13 \text{ gm}$$

Diameter of the design particle is:

$$D = \sqrt[3]{\frac{6\ m}{\pi \rho}} = \sqrt[3]{\frac{6(0.13)}{\pi\ (0.50)}}$$

$$= 0.792 \text{ cm } (0.32 \text{ in.})$$

Type of Shielding. - Since its suggestion in 1946 by F. L. Whipple (Ref. 10) the meteoroid bumper concept has been recognized as a promising approach to weight saving in meteoroid shield design. The extension of this concept to multiple sheet shields has been studied and testing has indicated potential weight savings beyond the single sheet bumper. However, until now no rational method has been available to assign quantitative values to these weight savings. Boeing has recently completed a study (Ref. 7) the results of which are used to design OLF shielding, which permits assessing weights for various multisheet configurations.

The results of multisheet shield studies indicate that, in general, shield weight is decreased as intersheet separation is increased. An optimum configuration on sheet spacing will exist, since standoff weight will increase as shield weight is decreased. However, this trade will be weak, and practical considerations will limit sheet spacings to less than 30 cm (12 in.). For this study, the sheet spacing is taken as ten times meteoroid diameter.

These same Boeing studies (Ref. 7) have indicated that aluminum is one of the most effective materials for multisheet meteoroid shields. This fact, combined with its manufacturing feasibility, led to the recommendation of aluminum for use in OLF shielding.

Details of the shield sizing are presented in the following discussion:

OLF Cylinder:

For 2-sheet shield, with $s/D = 10$,

t_1 = 0.157 cm (0.062 in.)

t_2 = 0.460 cm (0.181 in.)

S_1 = 8.26cm (3.25 in.)

Assuming standoffs for the outer sheet require 48 kg/m^3 (3 $lb./ft^3$), the effective gage of the shield is:

$$\bar{t} = 0.758\text{cm } (0.2985 \text{ in})$$

For a three sheet shield ($S_1/D = 10$),

$$t_1 = 0.112\text{cm } (0.044 \text{ in})$$

$$t_2 = t_3 = 8.26\text{cm } (0.064 \text{ in})$$

$$S_1 = S_2 = 8.26\text{cm } (3.25 \text{ in})$$

And the effective gage is:

$$\bar{t} = 0.716\text{cm } (0.282 \text{ in})$$

The 3-sheet design is thus more efficient.

If a 32kg/m^3 (2 lb/ft^3)fiberous filler is used between the 1st and 2nd sheet, the number of sheets behind the first is:

$$N_f = 2K$$

Where:

$$K = 1\text{-}0.9(S_1/D)\left[\, 1 + 113 \, (\rho_f/\rho)^2\right](0.0164) = 0.85$$

Or

$$N_f = 1.7$$

Converting these to 2 equivalent sheets:

$$t = t_f\left(\frac{N_f}{2}\right)^{12/7} \qquad t_f = 0.163\text{cm } (0.064 \text{ in})$$

$$= 0.124\text{cm } (0.049 \text{ in})$$

The resulting wall configuration consists of an outer sheet 0.112cm (0.044 in) thick, followed by a 8.26cm (3.25 in) thickness of 32kg/m^3 (2 lb/ft^3) fiberous filler, followed by a sheet of 0.125cm (0.049 in) material, followed by an unfilled space 8.26cm (3.25 in) thick, followed by a final sheet 0.124cm (0.049 in) thick. The final sheet will be damaged by an impacting 0.13gm meteoroid, but will absorb all the residual impact energy.

In incorporating this design requirement with the primary structure, the corrugation stiffening replaces the final shield sheet. The frames are used as standoffs for the second sheet, to which they attach directly. The outer sheet is attached to the second sheet through bonded deep corrugations, which are fabricated of low conductivity epoxy-fiberglass laminate to preserve the thermal protection afforded by the low density fiberous filler. The fiberous material fills the voids between the corrugations and the face sheets.

The design wall configuration is shown in Figure 5.3-9. To avoid modification to the basic MORL, the existing shield is integrated into the meteoroid protection system. While not the optimum possible design, this approach imposes very little mass penalty and allows full utilization of existing MORL structure.

5.3.2.5 Radiation Shielding. -

Radiation Environment. - The radiation encountered by the OLF space system includes geomagnetically trapped radiation (Van Allen Belts and Argus and Starfish electrons) and untrapped radiation, galactic cosmic radiation and solar particle event radiation. For the OLF, whose orbit inclinations will be in the range of 27-33° and whose orbit altitudes are below 500 n. mi., the solar particle event radiation contribution is believed to be small and will be neglected. A brief discussion of the model environments of trapped and galactic cosmic radiation follows.

Protons: Hess P1 B-L flux map and the McIllwain-Pizzella spectral fit of data between 31-43 Mev as follows:

$$J(E) = 1 \ \exp\left[- \ (E-30)/E_o\right]$$

where $E_o = 306 \ L^{-5.2}$.

Electrons: Vette AE1 B-L flux map Epoch 1963 for the omnidirectional flux and the energy spectrum of H. West for quiet day 2 of 1960 normalized to 1 in energy range between .5 and 1.2 Mev.

Galactic Cosmic Radiation:

$$D_{\text{Solar min.}} = \begin{cases} 0.54\ (L-1) + 0.072 \text{ m rad/hour} & 1 < L < 2.5 \\ 0.88 \text{ m rad/hour} & L > 2.5 \end{cases}$$

Vehicular and Space Suit Shielding. - Because of the extent to which space radiation interacts with material, it is important to consider the effect of any material between the environment and the dose point. The proper way to perform this study is to divide the vehicle into a large number of solid angles within which the equivalent thickness is somewhat constant and determine the primary and secondary radiation arriving at the does point from each solid angle. In this study the shielding has been assumed to be uniformly 2 g/cm^2 (4 $pounds/ft^2$) for the spacesuit. The validity of these assumptions must be determined.

Radiation Doses. - Radiation doses caused by the charged particles trapped in the geomagnetic field have been estimated from results of the Boeing Space Radiation and Environment Code for 200, 250, and 300 n. mi.-altitude circular orbits. Figure 53.-10 gives the results as point dose in tissue at the center of an aluminum sphere of the indicated thickness, although shields with the same area/density with most ordinary materials will give about the same results.

The radiation that penetrates very little material (as indicated by a large reduction in dose from shields of 0.2 g/cm^2 to shields of 2.0 g/cm^2) deposits nearly all of its dose in the skin and causes first erythema, a reddening similar to sunburn, and then, in more severe cases, a moist sloughing of layers

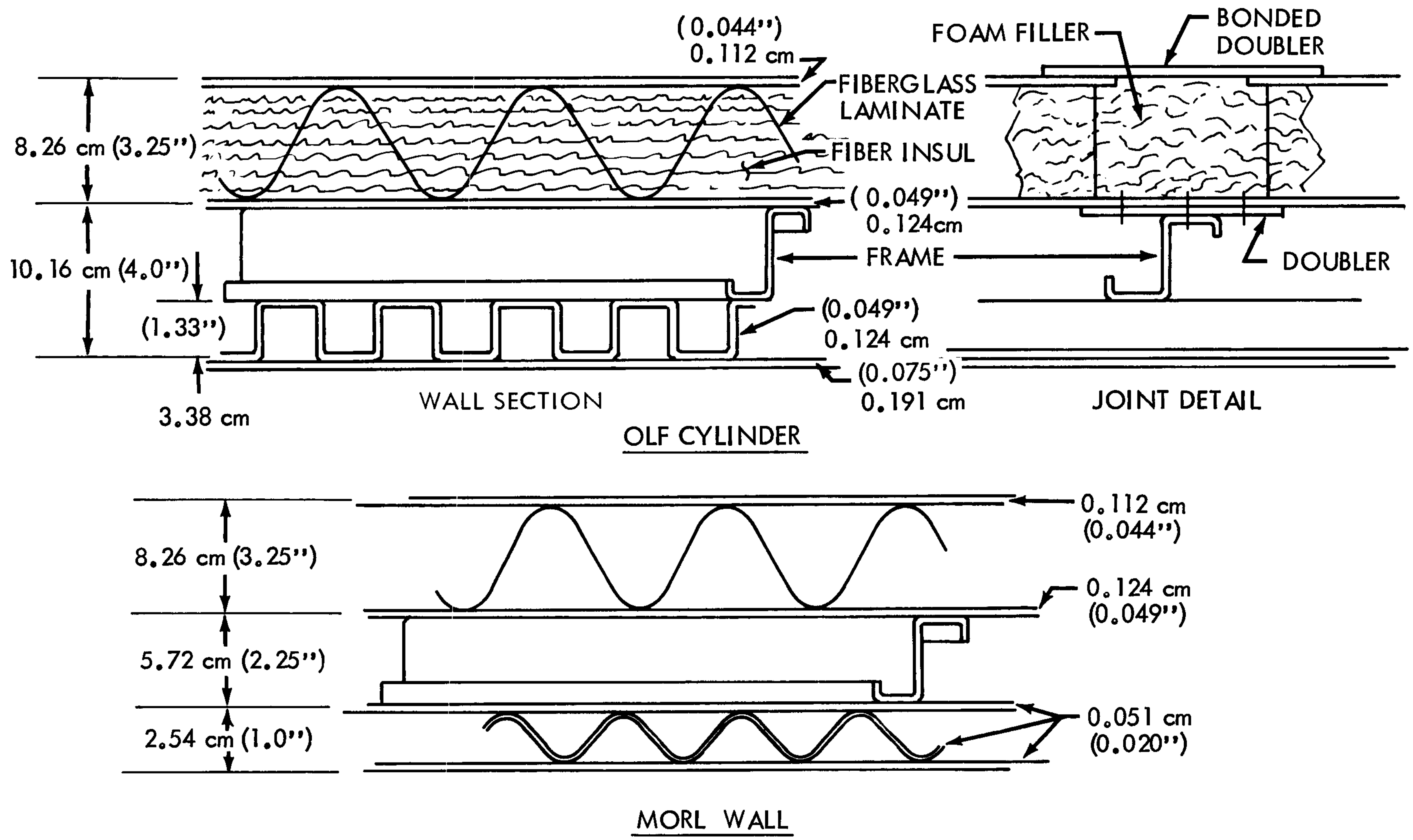

Figure 5.3-9: OLF STRUCTURAL WALL CONFIGURATIONS

of skin. Thus, the doses due to the electrons and the low-energy protons will be chiefly of this nature. Generally, a much larger skin dose can be tolerated than a whole-body dose created by the more penetrating particles. In addition, radiation that can only penetrate the skin can only reach the skin from outside the body. Since the doses indicated in Figure 5.3-10 are point doses absorbed from radiation incident from all directions, the actual skin doses are reduced from values of Figure 5.3-10 by a factor of about 1/2. Figure 5.3-11 gives some criteria which demonstrate this fact.

A significant feature of the doses in Figure 5.3-10 is the fact that they are accumulated almost entirely during passes through the South Atlantic anomaly, a region where the geomagnetic field deviates from the dipole model and where, consequently, the trapped particle belts penetrate to lower altitudes. As one result, the orbits with inclination a little above 30° spend the most time in this region and receive the largest doses. Second, the passes through the anomaly last at most about 15 minutes out of a 90-minute orbit and even in the cases of orbit inclinations of 30° to 40°, only about half the orbits pass through the anomaly. Figure 5.3.-12 illustrates this for the high energy proton dose rate behind a 1 g/cm^2 shield. The anomaly was encountered near the end of the first orbit and then was not encountered again until the twelfth. This suggests the very practical possibility of carrying out extravehicular operations in the thinly shielded spacesuits during periods in the orbit when the vehicle is receiving little flux.

Radiation Effects and Tolerances. - The massive dose criteria indicated in Figure 5.3-11 have generally been derived for radiation accidents which occur in a short time (minutes). Since the body can repair minor radiation damage (at a nominal rate of about 2-1/2% per day), the radiation doses accumulated over a 30- to 60-day period are mitigated somewhat by this mechanism. The criteria designated NCRPM in Figure 5.3-11 have been summarized from a report entitled "Exposure to Radiation in an Emergency" issued by the National Committee on Radiation Protection and Measurements (Report No. 29, January 1962). The continuous dose which can be allowed to a member of the general population was established by the International Commission on Radiological Protection (ICRP) and has been adopted by the AEC and other agencies. The skin-dose criteria have been taken from an article on "Radiation Biology and Space Environmental Parameters in Manned Spacecraft Design and Operation" in Aerospace Medicine (Vol. 36, February 1965).

FIGURE 5.3-10 DAILY TRAPPED RADIATION VAN ALLEN DOSES IN RADS

Altitude (n. mi.)	Shielding Thickness (Aluminum)			
	0.2 g/cm^2	1.0 g/cm^2	2.0 g/cm^2	5.0 g/cm^2
200	0.3	0.2	0.1	0.07
250	1.5	1.0	0.6	0.4
300	3.0	1.6	1.2	0.7

FIGURE 5.3-11 DOSE CRITERIA

Whole-body Dose	
0.5 rad/year (continuous	allowed to general population (ICRP)*
15 rad (one massive dose)	smallest does detectable by statistical study of blood counts of a large group of people (NCRPM)**
50 rad (one massive dose)	smallest dose detectable in an individual by laboratory methods (blood count) (NCRPM)
200 rad (one massive dose)	largest dose that does not cause illness severe enough to require medical care in majority of people (more than 9 out of 10) (NCRPM)
Skin Dose	
200 rad (massive dose)	loss of hair -- allowable dose used by Apollo Project (NASA)
650 rad (massive dose)	slight erythema (reddening of skin)
2000 rad (massive does)	moist sloughing of layers of skin
Gut	
54 rad	allowable dose used by Apollo Project (NASA)
Eye 2	
27 rad	allowable dose used by Apollo Project (NASA)

* (ICRP) - International Commission on Radiological Protection.
** (NCRPM) - National Committee on Radiation Protection and Measurements.

Conclusions. - The OLF skin, as presently designed would provide slightly less than $2g/cm^2$ protection to its crew. As the trapped particle dose at 535km (289 n. mi.) altitude, at an inclination of 30° is about 1 rad/day, it would appear the resultant 180 rad. total dosage may exceed gut and eye radiation allowance. However, the dosage values are those at the center of an aliminum sphere, which the OLF is not, and the effective radiation, that is radiation received by a crew member, is only that which passes through the OLF skin in his immediate vicinity, as the OLF itself will protect him from particles coming from other directions. To illustrate:

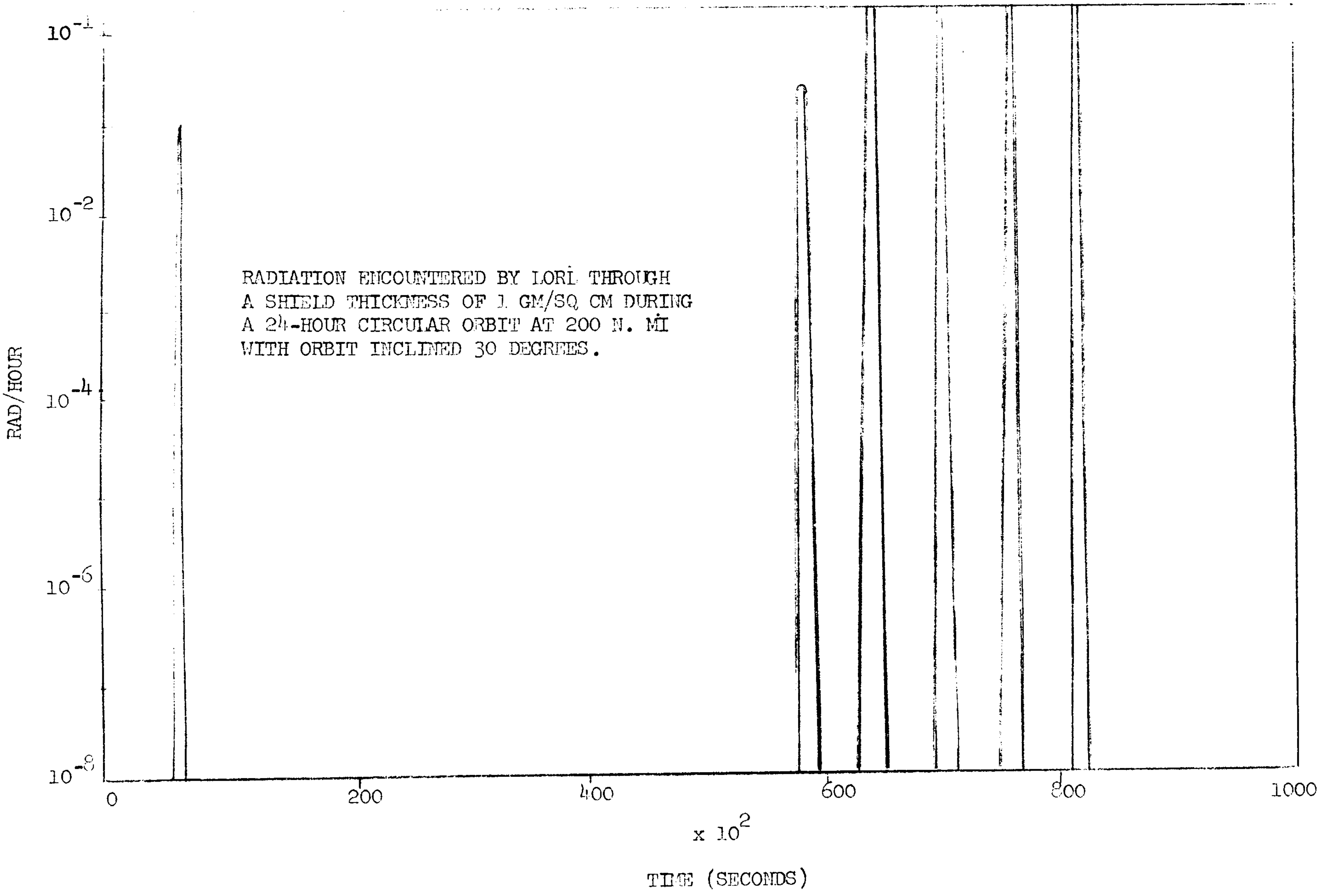

Figure 5.3-12: POINT DOSAGE RATE - HIGH ENERGY PROTONS

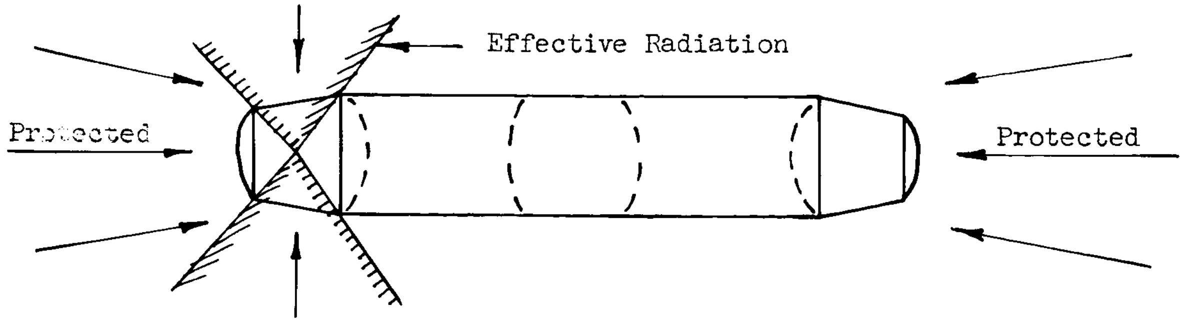

As Figure 5.3-10 doses are point doses, it is expected that the actual dosage will be approximately half of the value given. The radiation will further be decreased by a factor of at least four, due to the protection provided by the OLF itself as illustrated above. This then cuts the average dose to 1 rad/day x 1/2 x 1/4 x 180 days = 22.5 rads for the mission for a crew member, which is within known tolerances. Actually, a great deal more protection is available as the floors, equipment, walls, etc. are made of aluminum and help shield the astronaut.

To conclude, it appears that the OLF will provide adequate protection, but further detailed studies are required involving OLF sectoring and consideration of body shielding to determine body point dosage and shielding requirements.

For extravehicular excursions, the excess over-dosage received inside the vehicle can be reduced to virtually zero by selecting the times for the excursions to miss the magnetic anomaly.

5.3.2.6 Thermal Control. - The basic requirement on passive control of the OLF thermal environment is that it attenuate the effects of external heat sources to the same level of heating or cooling as is required by internal heat sources to maintain the proper internal environment. By proper selection of thermal control coatings, specified areas of the OLF can be made to reach stable temperature conditions for any specified amount of internal heat generation within certain limits. This section discusses thermal control coatings, thermal performance of walls, thermal balance requirements, and the effect of the environment on man.

Thermal Control Coatings. - The instantaneous operating temperature of a surface subjected to solar and Earth radiation will be determined by its ability to absorb heat (α), its ability to reject heat (ε), its ability to store heat (thermal capacity), and its orientation. Of these parameters, only α and ε are subject to variation independent of other operational considerations. The parameters are commonly combined in a figure of merit α/ε, which defines the net radiative heat input to a surface for a given environment. Available α/ε values range from 13 for cleaned 6061 aluminum to 0.16 for some paints. Any intermediate values can be obtained by mixing coatings in a striped pattern. Extreme values of α/ε will tend to degrade toward a central value due to volatility, ionizing radiation, photochemical effects, and micrometeoroid scouring. Values of α/ε from 1 to 4 appear most feasible, since they can be produced by sandblasting normal metal surfaces, thus producing surface finishes not subject to degradation.

Thermal Performance of OLF Walls. - Considering only conductive modes of heat transfer, the OLF wall configuration has a thermal resistivity of $\frac{6.0\,m^2 sec\,^{\circ}K}{j}$

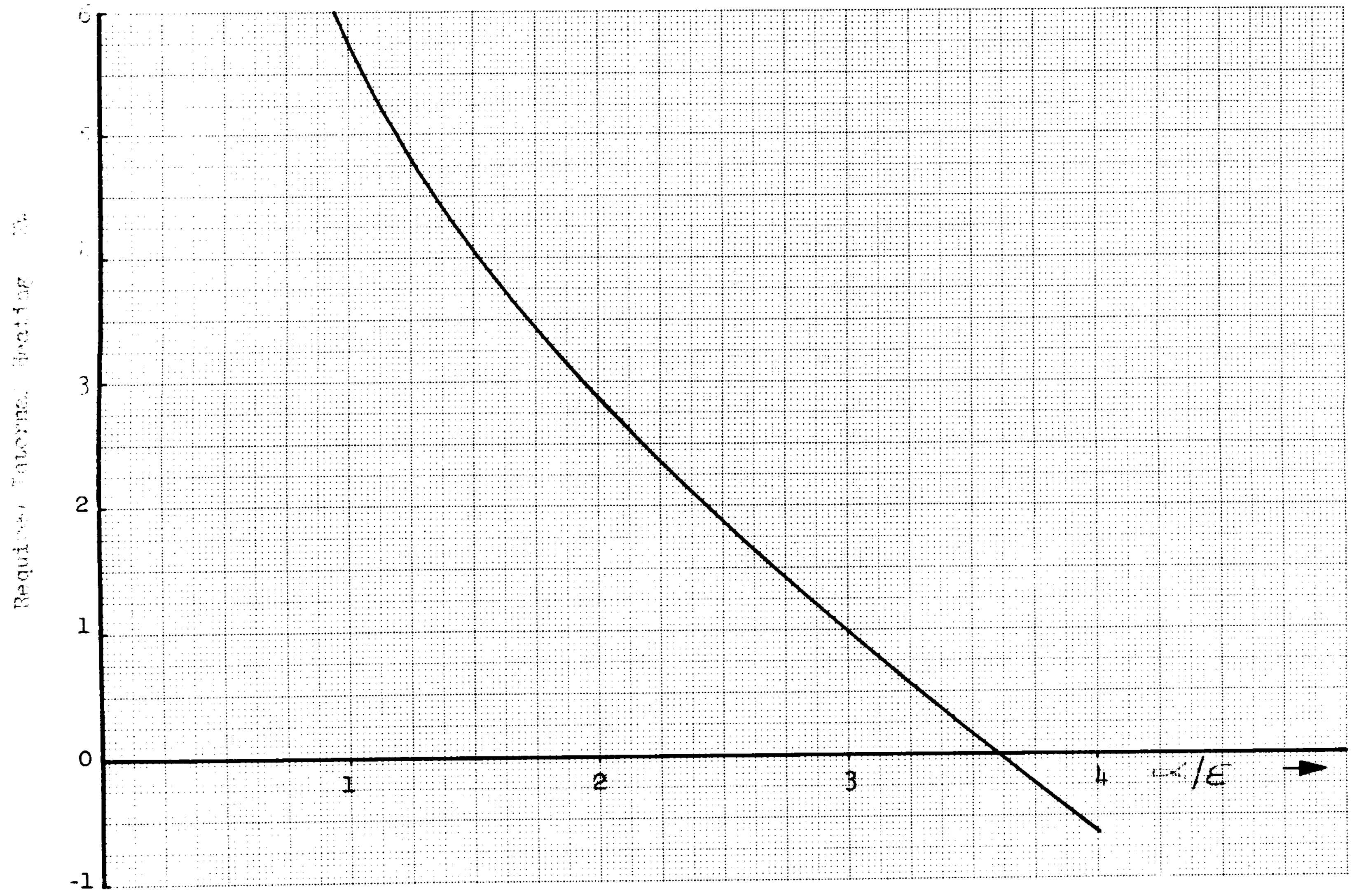

Figure 5.3-13: INTERNAL HEATING FOR THERMAL BALANCE VS α/ε

(17.67×10^6 in^2 sec° F/BTU), and a total thermal capacitance of 29.46×10^3 j/m^2°K (1.442 BTU/ft^2°F.).

Thermal Balance. - The effects on OLF thermal balance of solar and Earth-emitted radiation were evaluated by applying time-temperature data taken from Ref. 11 and integrating over the orbital period and over all vehicle surfaces. The results in terms of internal heating to achieve thermal balance are shown in Figure 5.3-13 as a function of α/ϵ for the OLF surface. The internal temperature for these calculations was assumed to be 284°K (70°F). Thermal balance is achieved for no internal heating at an α/ϵ ratio of 3.6, which is well within limits for a stable, practical surface treatment.

Effects of Thermal Environment on Man. - Man's thermal environment has two limitations; the ambient temperature must be stabilized within 289 - 303°K (60 - 85°F) for comfort with normal dress, and the temperature of compartment walls must be kept within the range of 278 - 339° K (40-150°F) to prevent discomfort or tissue damage upon skin contact. The first requirement is met with an active control system having sufficient capacity to damp out temperature fluctuation due to orbital variations and variations in internal power usage. The second requirement is met by providing an air circulation system which will induce sufficient convective heat transfer between compartment walls and ambient air to bring the walls to ambient conditions. For $\alpha/\epsilon = 3.6$, air circulation must provide 56.75 j/m^{2}sec ($0.005 \frac{\text{BTU}}{\text{ft}^2\text{sec}}$) cooling and 22.7 j/m^2 sec ($0.002 \frac{\text{BTU}}{\text{ft}^2\text{sec}}$) heating.

5.3.2.7 Secondary Structure. - Secondary structural elements of the OLF, which have been sized, include the hangar bay hatch and the elevator tubes.

Hangar Bay Hatch. - The 4.07m (13 ft.) diameter hangar hatch is required to carry a maximum 48×10^3 N/m^2 (7 psi) internal pressure without failure and without excessive deflection. Sandwich construction, either honeycomb or waffle core, is chosen for the hatch. Assuming the core does not contribute to bending strength, stress in the face sheets is given by:

$$\sigma = \frac{(3+\mu)}{16} \frac{PR^2}{dt}$$

Where

μ = Poisson's ratio = 0.3

P = Design pressure

R = Hatch radius

d = Sandwich depth

t = Face gage

and maximum deflection by

$$\delta = \frac{1}{9}\,\frac{PR^4}{Etd^2}$$

where:

E = Young's modulus

Assuming a hatch depth of 18.42cm (7.25 in.) (thickness of wall) and an allowable deflection of 0.508cm (0.20 in.), the face gage required is

$$t = 0.889\text{cm } (0.35 \text{ in.})$$

and the stress level for ultimate pressure is

$$= 55.36 \times 10^6 \text{ N/m}^2 \ (8030 \text{ psi})$$

Thus, the hatch is deflection-designed.

Elevator tubes. - The 162.6cm (64 in.) diameter by 1016cm (400 in.) long elevator tubes connecting the MORLs with the hub section are pressurized to 48×10^3 N/m^2 (7 psi) during normal operation. They were first designed to resist the effect of an 88 kg (194. lb.) man impacting them in the center at 4.57 m/sec (15 ft/sec.) in 0.2 sec. This produces a force of 2000 N (450 lb.) or a bending moment of

$$m = \frac{FL}{4} = 5084 \text{ N-m } (45{,}000 \text{ in. lb.})$$

If tubes are monocoque, the gage required is 0.102cm (0.04 in.). Upon checking the tubes for overpressure capability, it was found that 41.4 N/m^2 (0.006 psi) was required to produce failure. This is unacceptably low in terms of venting requirements. The tubes were thus designed to the same overpressure requirements as the hub bulkheads: 883 N/m^2 (0.128 psi) (nominal). The design expression is:

$$P_{cr} = 0.807\,\frac{Et^2}{lR}\sqrt{\left(\frac{1}{1-\mu^2}\right)^3\left(\frac{t}{R}\right)^2}$$

where

E = Young's modulus

l = Cylinder length

R = Cylinder radius

t = Wall gage

μ = Poisson's ratio

The resulting gage is 0.213cm (0.084 in.)

5.3.2.8 Emergency Operational Provisions. - The structural implications of emergency operations are related to the loss of pressure in one or more compartmented areas. The experiment and hangar bays required no special provisions for pressure loss since they are designed for reduced pressure operation. Loss of pressure in either of the MORLs, the hub section, or the elevator tunnels will require vent valve provisions to prevent structural failure of components designed by positive pressures. Heads in the hub section will fail for overpressure given by:

$$P_{cr} = \frac{2}{3\sqrt{5(1-\mu^2)}}\, E\left(\frac{t}{R}\right)^2$$

where

μ = Poisson's ratio = 0.3

E = Young's modulus = 73.1 x 10 $\frac{9N}{m^2}$ (10.6 x 10^6 psi)

t = Skin gage = 0.198cm (0.078 in.)

R = Effective radius = 711cm (280 in.)

which gives for the ultimate allowable overpressure:

Pcr = 1772N/m^2 (0.257 psi)

or nominal overpressure at vent opening:

Pvent = 883 N/m^2 (0.128 psi)

By a similar argument, the MORL heads will withstand 1462N/m^2 (0.212 psi) nominal. Elevator tubes will fail at an overpressure given by:

$$P_{cr} = 0.807\ \frac{Et^2}{lr}\sqrt{\left(\frac{1}{1-\mu^2}\right)^3\left(\frac{t}{R}\right)^2}$$

where

l = Distance between rings = 1016cm(400 in.)

μ = Poisson's ratio = 0.3

E = Young's modulus = 73.1 x 10^9 N/m^2 (10.6 x 10^6 psi)

t = Skin gage = 0.102cm (0.04 in.)

R = Radius = 81.3cm (32 in.)

Thus, the nominal overpressure for venting the elevator tubes is 883 N/m (0.128 psi).

To control loss of atmosphere throughout the OLF as a result of damage leaks and to provide shelter areas, pressure hatches are provided between adjacent compartments. These hatches are kept closed at all times except during ingress and egress.

5.3.2.9 MORL Modifications. - Three modifications must be made to the MORL structure to insure its integrity for the OLF application. The first, modification of MORL meteoroid shielding, is required because of the extension of life requirements from one (Ref.12) to five years. The second, the redesign of the MORL lower skirt, arises as a result of its incoroporation into the OLF structure. The third, redesign of the MORL radiator system, is required by skirt redesign and increased meteoroid hazard.

Meteoroid Shield Modification . - The basic MORL is designed to meet specified life requirements under meteoroid bombardment for a period of one year. When MORL is incorporated into the OLF as a structural element, considerations of meteoroid protection requirements dictate that:

a. MORL survival probability must be increased to 0.99732 since it becomes a part of a system which must have an overall probability of 0.99.

b. The exposure time is increased to five years.

c. The flux used to design the MORL shielding must be changed to conform to the latest accepted values for space vehicle design Ref. 5 & 12.

These three considerations act to increase the size of meteoroids used to design shielding. To incorporate additional protection while performing minimum modification of the basic MORL, multiple shields were added to the MORL outer wall as shown in Figure 5.3-9. Frames are added to the MORL outer skin to provide standoff spacing and to provide structural hard points for attachment of additional shielding. Sandwich panels, consisting of an 0.112cm (0.044 in.) aluminum face and a 0.124cm (0.049 in.) aluminum face separated by a corrugated fiberglass laminate core, are attached to these frames. The basic MORL structure is unchanged. This approach introduces a weight penalty over the optimum design equivalent to 0.028cm (0.011 in.) of aluminum.

Redesign of MORL Skirt. - The skirt of the basic MORL is designed to carry boost loads only. When MORL is incorporated into the OLF system, the design requirements of this skirt change. It must:

a. Provide structure for localized attachment during boost, which is easily removable.

b. Carry a seal ring which will conserve the atmosphere used for deployment and permit easy attachment of a permanent load carrying structure and seal when MORL is in the deployed position.

c. Seal the outer surface of the MORL pressure shell away from pressurization in the OLF hangar and experiment bays.

The first and second of these requirements are met by attaching a ring to the basic MORL skirt at the field splice. The third requirement dictates an annular bellows seal joined to the MORL pressure shell at the head weld and to the skirt through a small attachment ring provided for the purpose. In addition, the skirt section inboard of this seal must be sealed structurally and pressure-tested.

Radiator Redesign. - Since the basic MORL radiators are designed to the same meteoroid requirement as the original meteoroid shielding, they will require additional protection for the five-year life. Radiator design has not been investigated in detail, but several concepts suggest themselves. Fin-tube radiators could be used where the fins themselves are configurated to provide a meteoroid bumper for the tubes. Redundancy could be provided by installing some additional radiator flow path and providing means to valve off sections which are punctured. Radiator elements must be relocated on the outermost surface of the skirt and backed up by load and pressure-carrying structure.

5.3.3 OLF Mechanisms

5.3.3.1 Requirements. - In support of the maintenance and operation of the OLF and to perform orbital launch operations, a number of mechanical items of equipment must be included as part of the OLF. Those MORL equipment items retained in the OLF design such as the centrifuges, have been adequately described in the MORL study and are not, therefore, described here. Others, new to the OLF concept, will be perused in some detail. The main considerations which dictate the requirements for this equipment are crew safety and conditioning, ease of maintenance and operation of the OLF, and orbital launch operations. The following are the main points which have been considered in determining a requirement for a mechanism:

a. Extravehicular tasks will be kept to a minimum; these, insofar as possible, will be performed by remote control by a man in a shirtsleeve environment.

b. The OLF will be compartmentalized to the largest extent possible compatible with operations. Inadvertent decompression in one compartment will jeopardize only personnel in that compartment.

c. The capability of crewmen to transfer from one compartment to another expeditiously is of prime consideration, i. e., hub to MORL, or MORL to MORL.

d. Propellant transfer operations must be remotely controlled.

e. Transfer of men and material within the OLF, and between the OLF and the logistic space vehicle, must be performed in a shirtsleeve environment.

f. Mechanical equipment will be provided as required to physically condition crewmen.

5.3.3.2 MORL Module Extension. - In the launch configuration, the MORLs are retracted and locked within the structural cylinder and must be extended once in orbit. The module will slide on deployment tracks which will guide it to the extended position; the locks must be capable of being remotely activated from MORL 1. Once released the modules will be extended by pressurizing both the hangar and experiment bays from a high pressure nitrogen bottle located in the experiment bay.

A restraining mechanism will control deployment in a uniform manner to prevent binding between the MORL modules and inner cylinder walls. A seal between the MORL and the structural cylinder will contain the gas sufficiently to allow extension at $3450 N/m^2$ (0.5 psia). Once the MORLs are completely extended, they will be mechanically locked in the extended position by positive locks placed by the OLF crew.

An alternative to extending the modules with gas is to have a motor-driven friction gear, which will cause the MORL to extend at a predicted rate and will eliminate the need for a restraining mechanism. This will obviate the requirement to seal the bays prior to extension.

5.3.3.3 Umbilical System for OLF. - The requirement for the umbilical service tower is to transfer LOX and to supply to the OLV various other fluids, gases, and electrical umbilical connections. A total of 18 lines are required, which are shown schematically in Figure 5.3-14.

A major problem in the design of the umbilical was allowing for the sway of the orbital launch vehicle with respect to the OLF, due to attitude control and orbit keeping reactions. To compensate for fore and aft sway, a series of linkages were built into the umbilical system, as shown in detail I of Figure 5.3-15. Each fluid line has a swivel joint built into the line at each of the linkage axial centers. Lateral sway is compensated for by a series of bellows sections, which allow lengthening or shortening of the different lines as shown in detail II of Figure 5.3-15; this allows for lateral angular displacement of the umbilical tower.

For launch, the umbilical is concealed under a longitudinal fairing. For deployment, the fairing is released and the linkages are radially driven at the joints by electric actuators to provide for proper alignment of the umbilical plates with the matching pads on the OLV. After mating and securing of the umbilicals, the drive motors are declutched to allow the umbilical to sway freely with the vehicle.

The various electrical and fluid lines are engaged by quick coupling devices in the umbilical plates as the plates are brought together by manually tightening a series of toggle devices. During disengagement of the umbilical from the OLV, the toggles are simultaneously and remotely disconnected, and spring actuated pins separate the umbilical plates. The drive motor clutches are then engaged and the umbilical service tower rotated clear of the mission vehicle.

5.3.3.4 Docking Systems. - There are three vehicles which dock at the OLF; the Apollo, tanker, and OLV.

<u>Apollo</u> -- Four docking ports are provided for the Apollo logistic spacecraft; one in each MORL and two in the docking hub. This docking system uses a probe and drogue (cone) system for docking and attenuation of docking loads. For docking, the Apollo nose is rotated to one side, exposing the docking probe. When proper alignment is achieved, the probe is flown into the docking hub and pressurized. Rigidizing the probe pulls the Apollo to the dock, sealing the logistic spacecraft to the docking structure. Crewmen then transfer in a pressurized environment. Part of the docking systems are the stowage provisions for the Apollo which allow

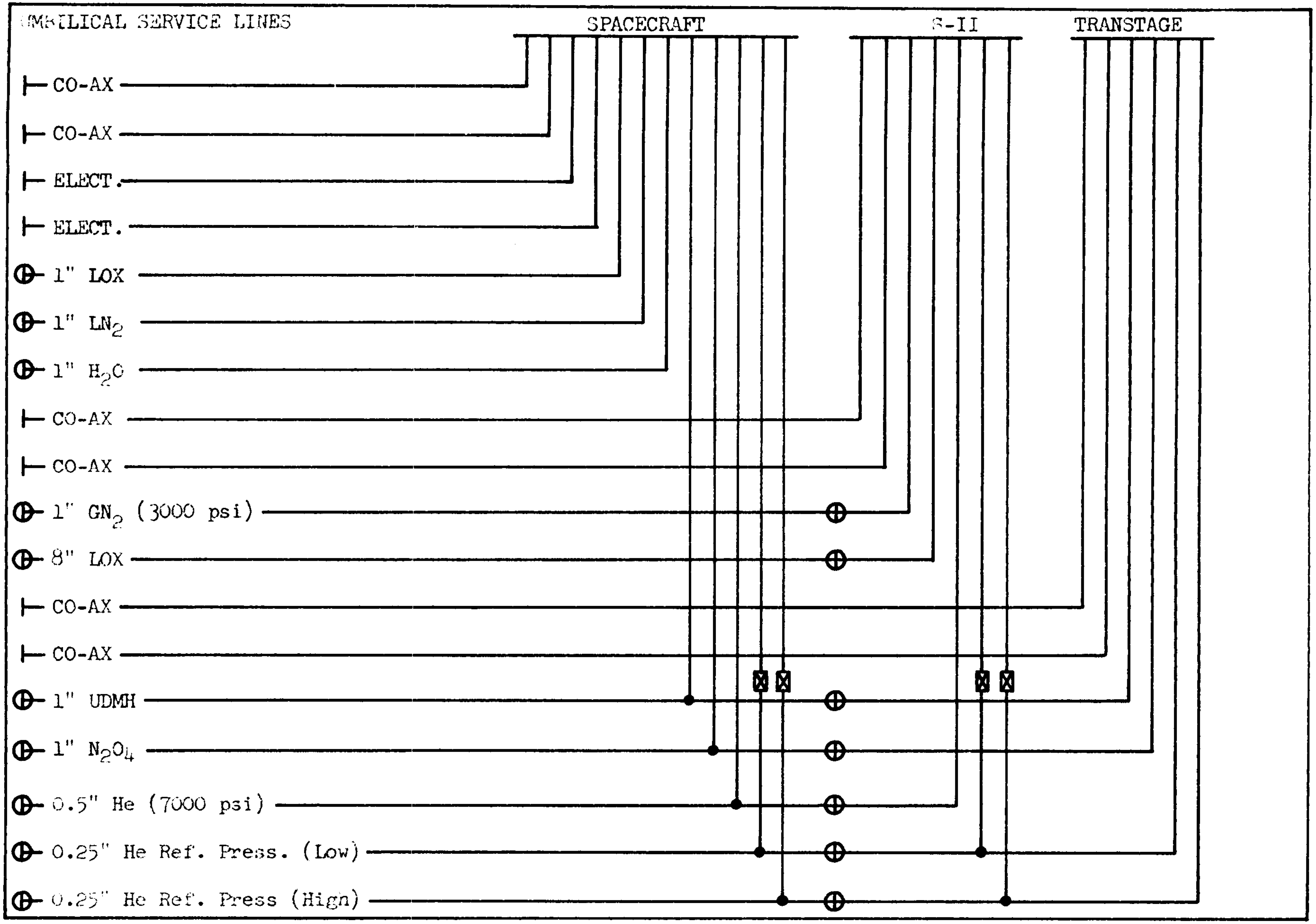

Figure 5.3-14: UMBILICAL SERVICE TOWER SCHEMATIC

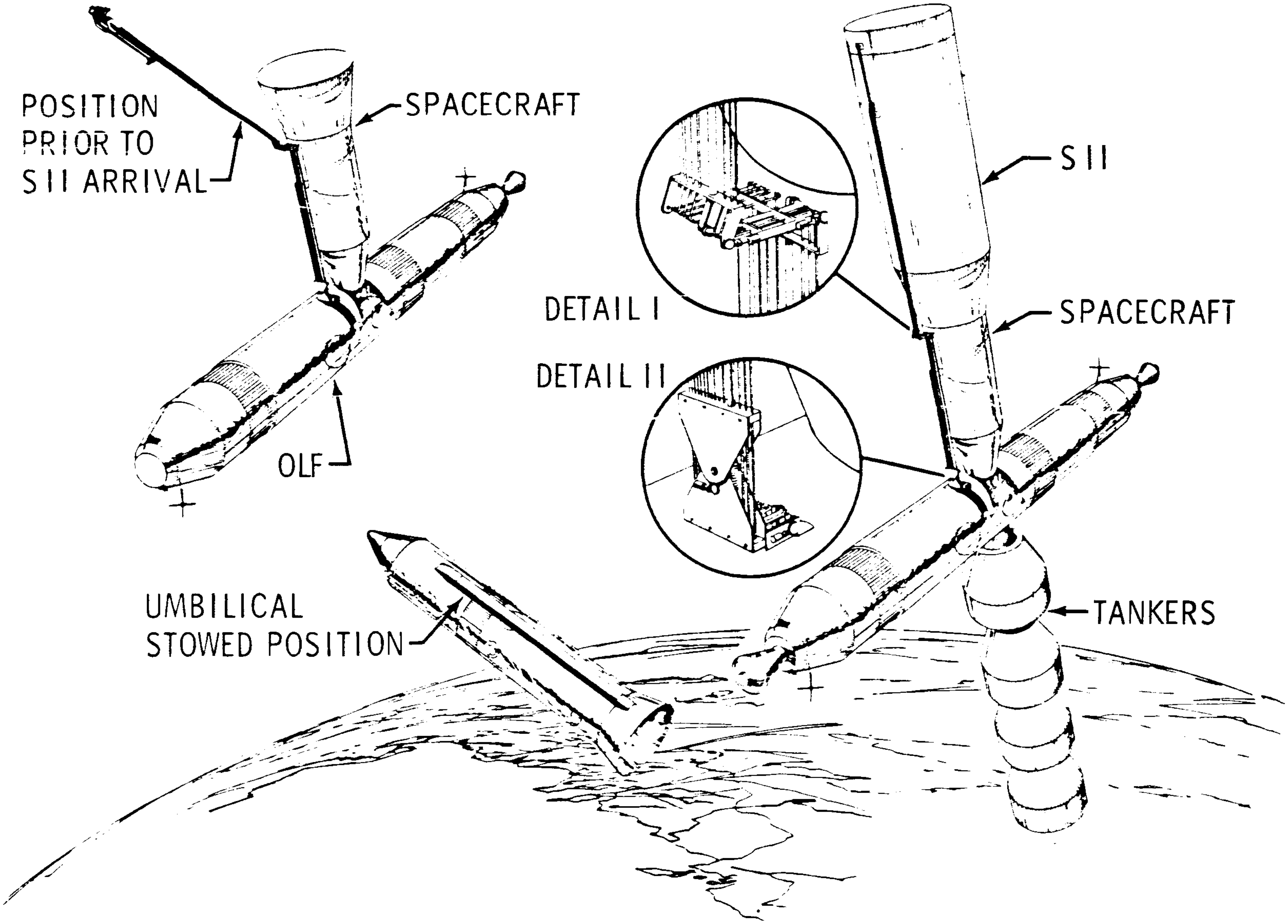

Figure 5.3-15: OLF UMBILICAL TOWER

the command module and/or the service module to be stowed on one side of the dock. The service module may be docked alone if necessary. Stowage mechanism is remotely operated by a crewman in a shirtsleeve environment. The stowage mechanism nearest the hangar door is capable of removing the logistics spacecraft from the dock and placing it in the hangar. The operator situated within the docking section has two viewing ports -- one into space and the other into the hangar -- which will permit him visual reference during the operation.

Tanker -- There is one tanker docking port located in the docking section of the hub. The tankers are so constructed that only one tanker dock is required, as the tankers dock to each other in tandem. The dock makes provisions for umbilical lines which will come from the tanker, through the hub to the umbilical service tower. The dock is designed to mate with the LOX tanker configuration shown in Figure 5.3-16.

For additional details see the initial OLF design drawing in Figure 5.3-1.

OLV -- The OLV docking provisions consists of a docking cone and airlock arrangement. The docking cone design is similar to that for the tanker except no provision is made for fluid transfer through the cone as in the tanker LOX line. It will accommodate an OLV, and uses the same system as the tanker for docking and attenuation of docking loads. Once the OLV is docked, a semirigid tube will be extended from the OLV and attached to the OLF airlock located in the terminal section of the hub. This tube will permit the transfer of men and materials between the OLF and the OLV in a shirtsleeve environment. Additional details are shown in Figure 5.3-1.

5.3.3.5 Elevator System. - The elevator system shown in Figure 5.3-17 provides a two-fold service. It carries personnel from either MORL to the hub section and provides a pressurized route through the OLF from one MORL to the other. The elevator tubes are designed to retract into half sections for launch and to be fully extended from each MORL to the hub terminal upon deployment. The slip joints are then sealed as part of the original assembly and checkout operations.

A powered-lift cage is provided in each tubular section, which transports personnel and supplies to and from either MORL or the hub section. The cage is 1.37m (4.5 ft.) in diameter by 2.14m (7 ft.) long, and travels on tracks within the tube to assure positive alignment at all times. It is provided with lightweight doors at each end for entrance and exit, and can be controlled from each end as well as from the cage itself. (Figure 5.3-17). An added feature of the elevator system is the cherry picker installed on the outside of the elevator shaft in the hangar bay. It is designed to travel the length of the elevator shaft and reach any portion of the hangar bay, thus, providing excellent mobility particularly during zero "g" conditions of operation.

5.3.3.6 Miscellaneous. - There are a number of mechanisms that are of major importance, but are identical to those used in the MORL; no detailed explanation is, therefore, provided.

Airlocks. - The airlocks are located in the OLF in such a manner as to insure a maximum of personnel safety and mobility. These are standard airlocks and are placed as follows:

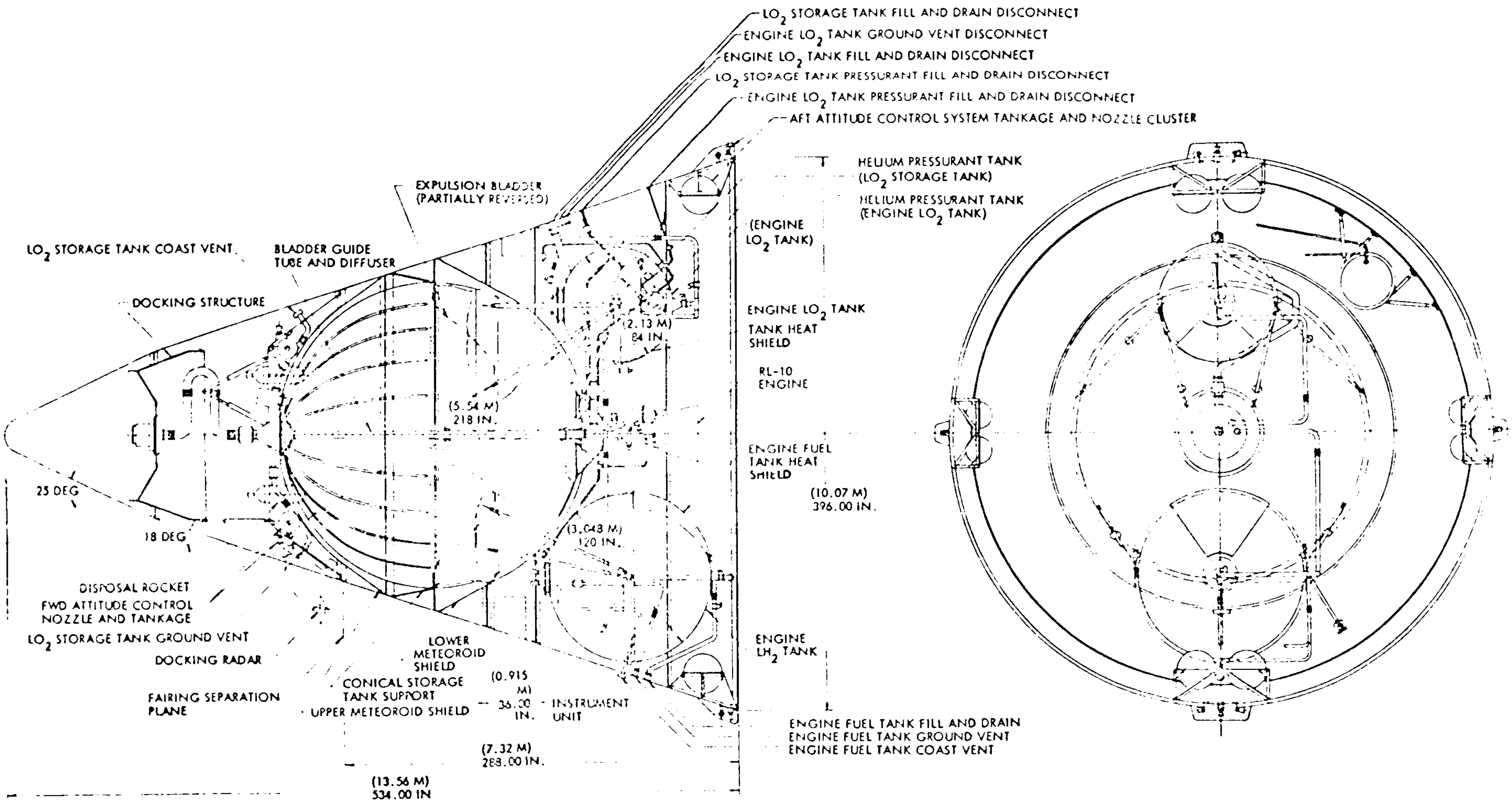

Figure 5.3-16: LOX TANKER

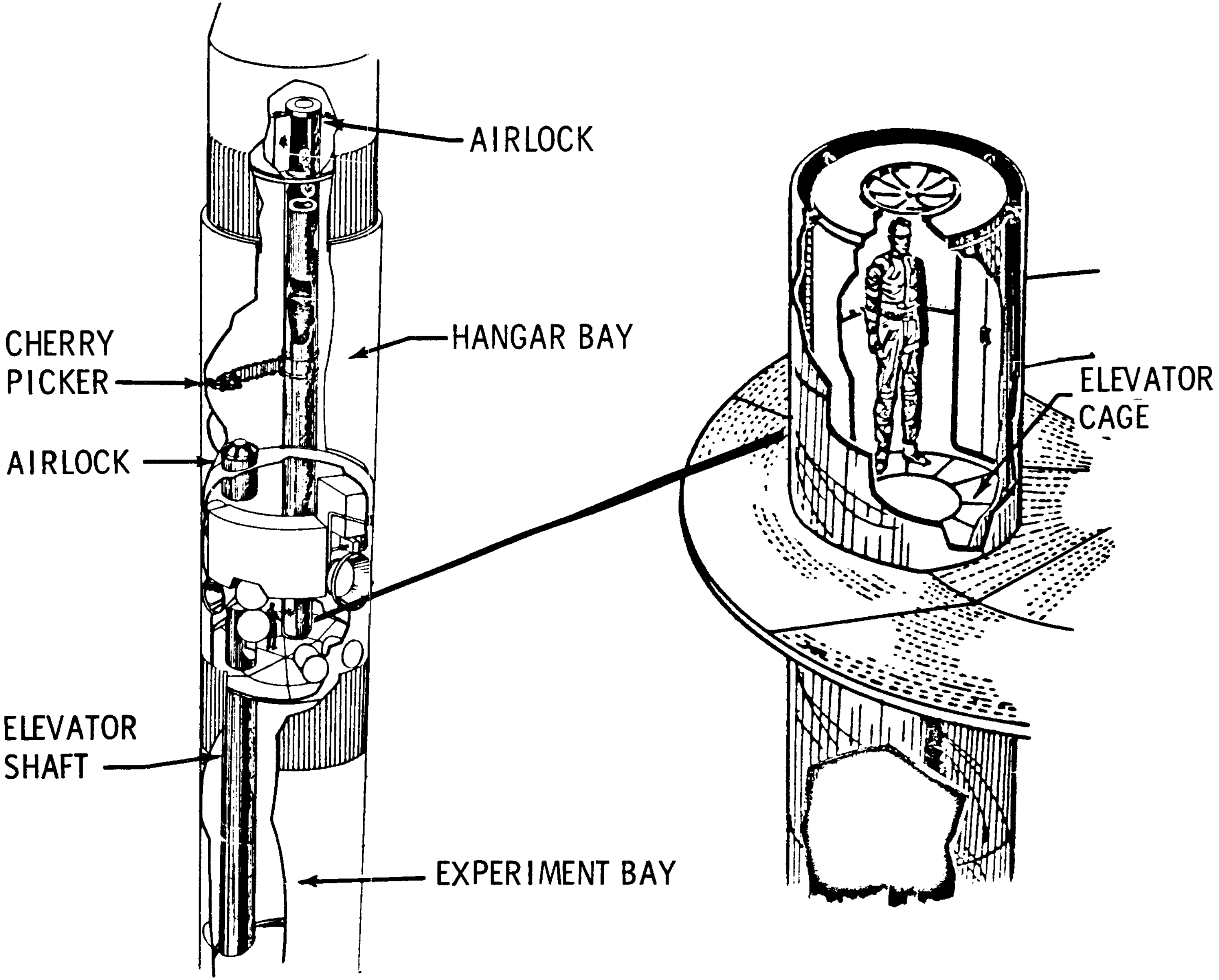

Figure 5.3-17: OLF ELEVATOR DETAIL

MORLs - 1 at the Apollo dock

1 between sanctuary and crew quarters

1 between inboard compartment and the elevator tubes

Elevator Terminal - 1 for access to experiment bay

1 for access to OLV'

1 for access to space

1 hatch for access to the docking section

Docking Section - 1 for access to the hangar bay

b. Hangar Door (Figure 5.3-2). - The 4.07m (160 in.) hangar door is located between the docking section of the hub and MORL #2. The door is constructed to have the pressure skin on the inside and is capable of being retracted within the OLF cylinder, and controlled from the docking hub. A unique feature is the viewing post, which allows the operator to get a view of the hangar while operating the door. To place the Apollo in the hangar, the operator will first open the door, then with the Apollo handling mechanism place the Apollo in the hangar and attach it to a special support fixture. The Apollo handling mechanism will be retracted to allow the hangar door to close and the hangar will be pressurized to allow maintenance work to be performed.

c. Gas Loop Replacement Package Mechanism. - This mechanism will provide the means of replacing the gas loop in the event of malfunction. The design is similar to that used on the MORL, but operation is from a different location. The two-power conversion loops are mounted on the shield structure which is provided with two hinged doors on the sides to facilitate loop replacement. An access door, located approximately sixty degrees from the installed loop position, is provided for loop replacement operation. Two handling booms which are pivoted from the centerline of the hub are used, one being attached to the spare loop, and the other to the loop to be replaced. A track and guide arrangement on the shield is provided to engage the loop being positioned to prevent damage resulting from inaccuracies of manual manipulation. Figure 5.3-1 shows additional details of the replacement mechanism.

d. Apollo Handling Mechanism. - Subsequent to docking, it may be necessary to remove the Apollo command module from its docked position, so that the service module may be docked to permit transfer of supplies. Seven arms have been provided for this purpose, which enables the command or service modules to be stowed jointly or separately; these are actuated remotely by a crewman in the MORL or hub. The Apollo command module may be remotely manipulated from its docked position in the hub into the hangar bay for maintenance. As the MORL Apollo handling mechanism is identical to that in the basic MORL configuration, no further details are provided.

e. Centrifuge. - A centrifuge is provided in each MORL for the physical conditioning of crew members. No details are given as the centrifuge is identical to that in the basic MORL.

5.3.4 OLF Mass Balance. - The mass of the OLF can be functionally divided between the structure, with mechanisms; the on-board systems; and the expendable items, including spares. The checkout and orbital launch equipment items independently studied by Lockheed are treated as a separate on-board system. The OLF maintenance equipment, which is a very small percentage of the total weight, includes both checkout equipment and OLF proper requirements.

Spatially, the OLF mass can be divided between the modified MORL vehicles at each end, the hangar bay, the experiment bay and the central hub. The hub contains the docking section and the elevator terminal. One MORL module contains the checkout and launch equipment with the OLF operations area and the other contains the assembly and repair shop. Each MORL has an identical living area, with galley, eating area, and separate cubicles for six men. The MORL mass analysis is essentially that given by the Douglas Report SM-46082 dated September 1964. Exceptions to the MORL preliminary design mass will be noted as they occur.

5.3.4.1 Initial OLF Mass Analysis Parameters. - Initial OLF mass estimates are provided as a starting point for mission feasibility and cost estimates. The baseline concept, using a single given preliminary design configuration, forms the basis for subsequent design trades and modifications. For a vehicle of the OLF size and mission scope, the spectrum of possible configurations was very broad and many alternates have been evaluated. Although much of this evaluation has been done, more should be expected, especially for mass and volume utilization which efficiently incorporates advanced and alternate mission capability.

A valid constraint imposed on the mass optimization of the initial OLF design is the desirability of using hardware that is being studied and proposed for other space missions in the 1970's. The OLF design incorporates hardware of the MORL, Apollo, Orbital Tanker, and Orbital Launch Vehicle to the greatest extent possible. The matching of subsystem components and expendables between the OLF and OLV is considered to be a primary requirement from the standpoint of spares provision, skill requirements, and expendable storage and transfer efficiency.

There are basic differences between the MORL mass criteria and that of the OLF. Whereas the present MORL design mass is limited by Saturn IB boost capability, the OLF design appears to be well within Saturn V capability for launch and transfer to the prescribed 535 km (289 n. mi.) orbit altitude. The in-orbit mass margin appears to be over 20,000 kg (44,000 lb_m). Resupply mass requirements for the MORL design are relatively low, consequently the guiding criteria has been to lower the MORL boost mass even if it added some penalty to the resupply missions. On the other hand, the OLF mission has large resupply requirements and can generally be considered to be resupply limited rather than boost limited.

The initial OLF design configuration from which the present mass values are derived is shown on Figure 5.3-1. Earlier OLF mass studies with this structural arrangement were based upon MORL usage of solar panel electrical power and open cycle cryogenic oxygen supply. The configuration now includes the MORL design revision to the Isotope/Brayton power supply and oxygen regeneration. Should subsequent MORL changes be proposed, the philosophy of the OLF design is such that such changes will be considered as incorporated into the OLF design wherever practical. The same is also true of Orbital Tanker or OLV changes.

The initial launch mass includes expendables for the 90-day resupply period, plus 45-day emergency usage. An exception is the propellant supply, which is based upon the entire Orbital Launch Operations period of 170 days, plus 45-day emergency usage. Crew sizing is based upon a full 12-man capacity, plus overloads of up to 18 men for 15 days. Orbit inclination and altitude are 30° and 535 km (289 n.mi.). The combined mass analysis of orbit control, radiation protection, and resupply payload capability indicates that lowering the altitude may lower the combined mass requirements over a given period of time.

Tank sizing for all fluids is based upon the maximum required quantity, which in turn depends upon the maximum emergency crew size, spin or non-spin modes, and the duration of these and other operations being performed by the OLF during the Orbital Launch Operations (OLO) period or the OLF sustaining periods. Initial OLF capacities are not sized for advanced OLF operations. Advanced concept studies, as noted in Paragraph 5.5, indicate that no tank resizing is necessary for most advanced missions.

5.3.4.2 Backup Systems, Redundancy and Reserves. - Backup systems are provided for many operating components and systems. In general, if a component or system cannot be out of operation for the period of repair or replacement, it is provided with a backup system. These may be similar redundant units, in parallel or series, or units of another type that perform the same function.

As an example, the reaction control nozzles are redundant, but located in a replaceable module. There are periods of OLF operation when even a short stoppage of the attitude control cannot be tolerated, thus automatic switchover redundancy is provided. However, there are other periods when the system may be inoperative for days. At these times, an entire faulty unit can be removed and replaced with a spare, allowing repair at leisure in the OLF assembly and repair shop. If repairable, it returns to the OLF spares inventory.

Another example is the environmental control system, which contains several different types of atmosphere measuring units to supplement each other in the detection of trace contaminants. The provision of many backup systems and redundancies is deemed desirable, since such provisions will tend to decrease the spares and resupply requirements while improving reliability. Reserves, generally applied to expendables, consist of emergency reserves and weight allowance reserves. Emergency reserves are provided for unscheduled mission requirements, over and above the nominal OLF capability. They are also provided for replenishment of expendables due to failure of a production or processing unit. An example is the emergency water reserve. This reserve includes emergency requirements for:

- Water recovery system failure - 15 days
- Sanctuary supply - 10 days
- Six man over-capacity crew - 15 days
- Faulty batch-requiring reprocessing

Fire or wash down

Obviously, the probability of all these emergencies occurring simultaneously is very small. Since mission abort or logistic resupply will be called for after a major emergency, the emergency water supply is sized for the worst single case which is that of water recovery system failure.

Mass allowance reserves are provided for off-nominal performance or estimated mass variances. These include manufacturing tolerances, propulsion thrust variations, and unexpected attitude control or metabolic usage rates. Values for these allowances vary from 3% for tolerances to 50% for some usage rates. Such allowances are included directly in the baseline design quantities or usage rates and do not appear as separate reserve tabulations. The mass summary of the OLF is shown in Figure 5.3-18. Clarification of particular mass values and criteria pertaining to each system are noted in the following paragraphs. With the exception of the checkout components, all values shown are the sum of two or more levels of subdivision. The mass moment of inertias and reference axes are shown on Figure 5.3-19. A time dependent mass balance for the Orbital Launch Operations period is shown on Figure 5.3-20 which shows mass and inertias for each of the OLO modes. The initial launch crew and personal equipment mass, which is transferred from the Apollo to the OLF in orbit, is shown on Figure 5.3-21.

Mass values of individual components have been provided for the maintenance analysis program and are included in Paragraph 4.2. Detail mass values are shown in the following descriptions only for those items not appearing in that paragraph.

5.3.4.3 Structures and Mechanisms Mass. - The OLF structural items basically consist of the two MORL primary and secondary structures; the hub structure; the experiment bay structure; the hangar structure; and associated airlocks, windows, hatches, and thermal protection insulation. Major mechanism requirements include those for hatches, docking, equipment or vehicle transport and stowage, umbilical and centrifuge operation.

The present MORL primary structure is modified only to the extent that additional meteoroid protection is added. A two layer, foam-filled, stand-off bumper is added, per Paragraph 5.3.2.4. This adds 28 cm (11 in.) to the 654 cm (257 in.) MORL diameter. The present MORL cylinder skin design unit mass is 12.2kg/m^2 (2.5 lb$_m$/ft^2) to which the added meteoroid protection adds 9.5 kg/m^2 (2.0 lb$_m$/ft^2) for a total of 21.7 kg/m^2 (4.5 lb$_m$/ft^2). The 17° conical section unit mass is 10.0 kg/m^2 (2.1 lb$_m$ /ft^2), to which 8.7 kg/m^2 (1.8 lb$_m$/ft^2) is added for a total of 18.7 kg/m^2 (3.9 lb$_m$/ft^2). Redesign for an optimum combined wall, rather than addition of the bumper shield, would reduce the total only about 0.8 kg/m^2 (.2 lb$_m$/ft^2). These walls also provide effective aluminum radiation protection of 21.4 and 18.5 kg/m^2 (4.4 and 3.8 lb$_m$/ft^2) for the cylinder and cone respectively.

The MORL secondary structure includes floors, walls, cabinets, and other fixed components. Major secondary structural units are constructed the same as those proposed for the MORL. Floors are sandwich construction with unit mass of 4.5 kg/m^2 (.9 lb$_m$/ft^2). Walls, cabinets, and tables are of paper honeycomb aluminum construction. Minor modifications to the arrangement and construction of the MORL is necessary. The crew quarters face the central living area with

MAJOR SYSTEM	LOCATION				
	MORL #1	MORL #2	HANGAR BAY	EXPERIMENT BAY	HUB
	kg	kg	kg	kg	kg
STRUCTURE					
MORL PRIMARY STRUCTURE	(5659)	(5659)			
Laboratory Shell	1136	1136			
Storage/Sanctuary Shell	375	375			
Outer Wall/Meteoroid Shield	3790	3790			
Docking Structure	358	358			
MORL SECONDARY STRUCTURE	(1275)	(1238)			
Floors and Supports	652	652			
Checkout and Operations Compartment	201				
Assembly and Maintenance Compartment		164			
Crew Compartments	274	274			
Sanctuary Provisions	16	16			
Miscellaneous Supports	39	39			
Centrifuge Structure	93	93			
OLF MAIN CYLINDER			(7412)	(6945)	(6728)
Wall/Meteoroid Shield			6271	6468	3586
Hangar Door			374		
Internal Pressure Walls					767
Apollo Docking Structure					168
OLV DOCKING					538
Orbital Tanker Docking					606
Docking Load Rings					264
Access Tube			400	400	352
Attachment/Restraint Provisions			36	54	23
OSE/Equipment Transport/Stowage			331	23	54
Tank Supports					370
AIRLOCKS, WINDOWS AND HATCHES	(93)	(93)	(209)	(122)	(124)
UMBILICAL ARM					(1087)
THERMAL PROTECTION	(42)	(42)	(73)	(73)	(58)
MECHANISMS	(339)	(334)	(108)	(19)	(882)
Hatch Mechanisms	18	18	16	8	53
Centrifuge Mechanisms	39	39			
Docking/Servicing Mechanisms	113	113			633
Logistics Vehicle Transport/Stowage	164	164			91

Figure 5.3-18: OLF MASS SUMMARY

MAJOR SYSTEM	LOCATION				
	MORL #1 kg	MORL #2 kg	HANGAR BAY kg	EXPERIMENT BAY kg	HUB kg
MECHANISMS - continued					
Antenna Mechanisms	5				
OSE Handling/Stowage			65		
Hangar Door System			27		
Equipment Transport/Stowage				11	
Umbilical Arms					105
ENVIRONMENTAL CONTROL SYSTEM	(1174)	(1170)	(134)	(134)	(1662)
Atmosphere Supply System	252	252	36	36	1324
Atmosphere Purification System	230	230			13
Water Management System	76	76			
Waste Management System	11	11			
MORL Conditioning System	56	56			
Hub Conditioning System					46
Bay Conditioning and Purification			68	68	
Pumpdown Systems	145	145			105
Cooling Circuit	130	121			88
Heating Circuit	49	49			
Heat Transport	24	24	8	8	14
Closed Environment Systems	28	28			
Wiring	14	14	6	6	11
Heat Transfer Fluids	159	164	16	16	61
CREW SUPPORT SYSTEM	(483)	(520)	(15)	(105)	(122)
Sleeping and Clothing	10	10			5
Radiation Protection	64	64			
Pressure Suits/EVA Backpacks	53	53			75
Hygiene Provisions	23	23			
Housekeeping/Laundry Equipment	65	65	6	6	24
Galley/Food Handling	49	49			
Recreation/Information Equipment	72	77		20	
Exercise Provisions	10	10		70	
Medical/Dental Provisions	22	63			
Furnishings	101	92			
Restraint/Locomotion Provisions	14	14	9	9	18
COMMUNICATIONS AND TELEMETRY	(105)	(100)	(20)	(20)	(46)
VHF Communications and Telemetry System	7	7			
Unified S-Band System	37	37			
TV System	34	29	5	5	26
Intercommunications System	5	5	3	3	3
Wiring	22	22	12	12	15

Figure 5.3-18: OLF MASS SUMMARY (CONTINUED)

	LOCATION				
MAJOR SYSTEM	MORL #1	MORL	HANGAR BAY	EXPERI-MENT BAY	HUB
	kg	kg	kg	kg	kg
MAINTENANCE EQUIPMENT	(25)	(73)	(5)		(21)
Maintenance Tools	7	16			10
Special Tools	2	2	5		5
Repair/Service Kits	5	15			
Test Equipment	6	30			6
Miscellaneous	5	10			
CHECKOUT EQUIPMENT	(374)	(41)	(36)		(1557)
Data Management	272				
Work Bench and Equipment		18			
Status Control Equipment	68				
Tools	11	23			
Gaseous Servicing Equipment					64
Propellant Servicing Equipment					238
Cryogenic Servicing Equipment					136
Misc. Fluids and Servicing Equipment					906
Piping and Support Structures					181
Wiring	23		36		32
ORBIT CONTROL AND STABILIZATION	(474)	(286)	(27)	(27)	(294)
Reference/Inertial Sensors	19	19			
Computers	68				
Secondary Guidance System	44				
Control Electronics	34	16			
Inertial Measuring Unit	57				
Reaction Control System	156	156	16	16	278
Axial Balance System	76	76	7	7	11
Wiring	20	19	4	4	5
SPARES	(390)	(322)			(2805)
OLF	390	322			511
Apollo Logistics Spacecraft					247
OSE Spares					199
OLV Spares					1433
Orbital Tanker Spares					415
ELECTRICAL POWER	(167)	(153)	(30)	(30)	(2002)
Fuel Block					340
Shielding					658
Brayton Cycle Power Package					472
Radiator					67
Batteries					174

Figure 5.3-18: OLF MASS SUMMARY (CONTINUED)

MAJOR SYSTEM	LOCATION				
	MORL #1	MORL #2	HANGAR BAY	EXPERIMENT BAY	HUB
	kg	kg	kg	kg	kg
ELECTRICAL POWER - continued					
Power Conditioning					205
Distribution and Control System	142	128	19	19	59
Lighting	25	25	11	11	27
EXPENDABLES					
LIFE SUPPORT	(1283)	(1283)			(2372)
Food	611	611			
Water	245	245			
LO_2	161	161			508
LN_2	59	59			441
GO_2	55	55			439
GN_2	49	49			386
EC/LS Expendables	103	103			
OLV LO_2					417
OLV LN_2					181
PROPELLANTS (N_2O_4/UDMH)	(258)	(258)			(3133)
OLF (170 Day OLO Cycle)	64	64			908
OSE (170 Day OLO Cycle)					314
OLV (170 Day OLO Cycle)					1812
OLF Proper (45 Days)	194	194			74
OSE (45 Days)					25
PRESSURANTS (He)	(3)	(3)			(77)
Propellant Transfer	3	3			9
OLV Servicing					68
CONTINGENCY	(982)	(914)	(445)	(406)	(2250)
TOTAL OLF (67,230 kg) (148,215 lb_m)	13,126	12,489	8514	7881	25,220

Figure 5.3-18: OLF MASS SUMMARY (CONTINUED)

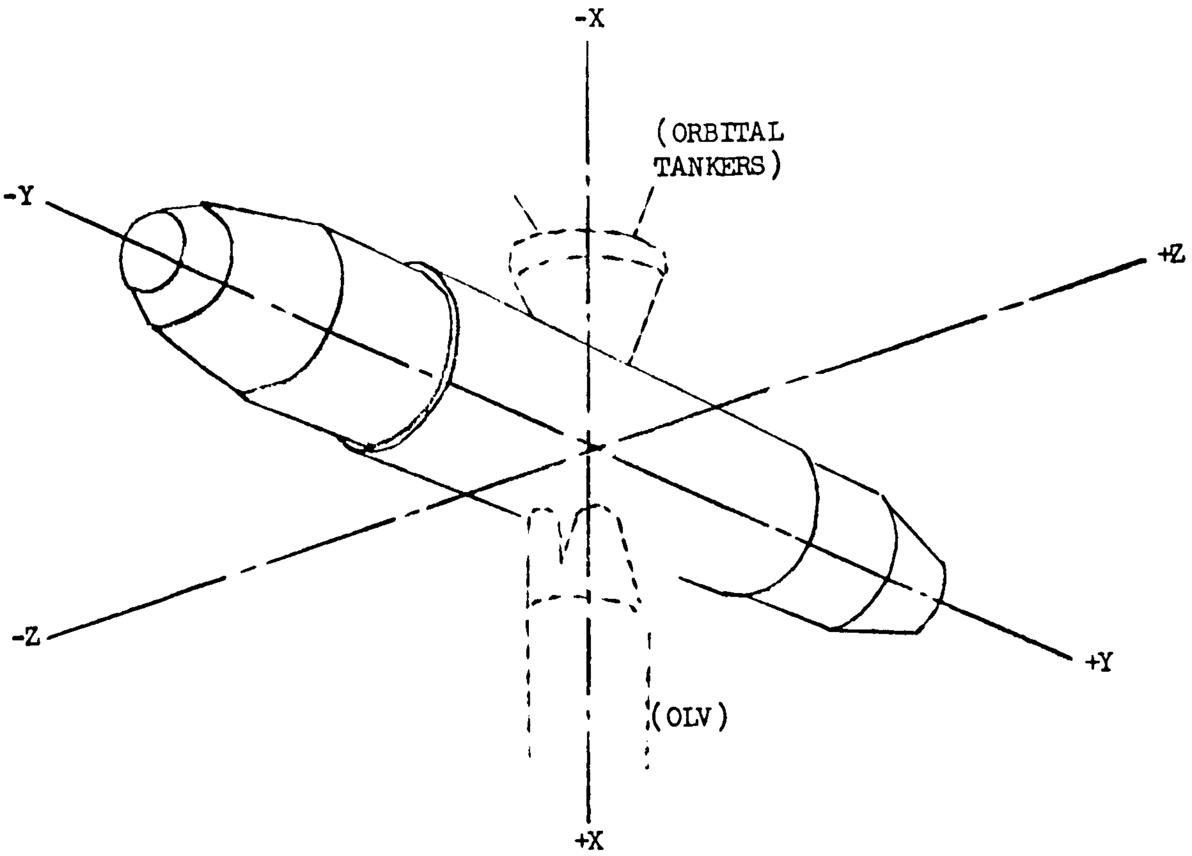

	MASS	MOMENT OF INERTIA kg - $m^2 x 10^{-6}$		
	kg	I_{XX}	I_{YY}	I_{ZZ}
OLF with crew (1)	67,751	30.71	1.61	30.87
OLF + Apollo (2)	73,092	30.92	1.82	30.92
OLF + Apollo (3) + Apollo LSV	81,092	35.01	2.20	35.01
OLF + Apollo + 2 Apollo	89,092	39.10	2.58	39.10

(1) 5-man Crew and Equipment - 521 kg

(2) 6-man Capacity Modified Apollo - Docked at Hub

(3) 8000 kg Total Mass includes 1500 kg Cargo - Stowed at MORL Side

Figure 5.3-19: MASS MOMENT OF INERTIAS AND REFERENCE AXES

MODE		Module Mass	Mode Mass	C.G. C.G. X-Axis	I_{xx}	I_{yy}	I_{zz}
		kg	kg	cm	kg/meter^2 x 10^{-6}		
1	OLF + Apollo Total	73,092	73,092	.0	30.9	1.8	30.9
2a	Add OLV Total	112,932	186,024	+1260	31.4	47.2	76.0
2b	Add 1 Logistics LSV Total	9,208	195,232	+1260	34.2	47.3	80.6
3	Add LOX Tanker #1 Total	100,763	295,995	+580	34.4	50.9	84.3
4	Add LOX Tanker #2 Total	100,763	396,758	-13	34.6	77.6	109.6
5	Add LOX Tanker #3 Total	100,763	497,521	-570	34.8	147.1	181.2
6a	Add LOX Tanker #4 #4 Total	100,763	598,284	-1100	35.0	280.0	312.0
6b	Add 2nd Logistics LSV Total	10,433	608,717	-1100	39.4	280.2	318.2
7	Add S-IIB (with LH_2)+ ① Transtage (dry) ② Total	116,499 3,221	728,437	-270	40.2	458.5	496.0
8	Transfer LOX to S-IIB Total	350,571	728,437	3230	40.2	1001.0	1041.0
9	Launch OLV + S-IIB +Transtage (wet) ③ +Transferred Supplies and Crew Total OIF + Empty Tankers	580,002 5,035 909	142,491	-810	37.5	27.1	67.6
10	Separate LSV + Waste + Tankers	9,435 52,480	80,576	0	31.4	1.7	31.4

① OLV & S-IIB per FPO Internal Note. No. 1-64 by H. O. Ruppe, November 1964

② LOX Tanker & Transtage per LMSC-A748410 Tanker Design Study, 30 May 1965

③ Propellant per LMSC-A742556 by W. T. Eaton, 22 March 1965

Figure 5.3-20: ORBITAL LAUNCH OPERATIONS MASS SUMMARY folding aluminum sandwich walls rather than curtains. Acoustical filler of 1.3 cm (.5 in.) is used between .040 cm (.010 in.) aluminum sheets. Unit mass of these walls is 4.1 kg/m^2 (.8 lb$_m$/ft^2) which includes panel closeouts and hinges.

The cylinder containing the hub, hangar bay,and experiment bay is a combination of pressure shell, corrugations, and standoff sandwich material that integrates the functions of primary load carrying and meteoroid protection. The general construction is noted in Paragraph 5.3.2.4. Unit mass of the combined wall varies from 24.3 kg/m^2 (5.0 lb$_m$/ft^2) at the experiment bay MORL attach ring to 24.9 kg/m^2 (5.1 lb$_m$/ft^2) at the hangar bay end. Of this total, 15.9 kg/m^2 (3.2 lb$_m$/ft^2) is effective meteoroid protection and 21.0 kg/m^2 (4.3 lb$_m$/ft^2) is effective aluminum radiation protection.

The hub docking structure mass is sized to accommodate a docking impact energy of 3 x 10^6 joules (2.2 x 10^6 lbf-ft). In addition, the outer sheet of the meteoroid shield is locally increased by the addition of a 0.2 cm (.08 in.) bonded doubler around all docking ports and hatches. The central access tubes are monocoque construction with a unit mass of 6.8 kg/m^2 (1.4 lb$_m$/ft^2). The hangar door is honeycomb with .279 cm (.110 in.) faces and 18.42 cm (7.25 in.) thick, which yield 26.8 kg/m^2 (5.5 lb$_m$/ft^2). Mechanisms for hatches consist of two-way latches, most of which are quick-open types of as much as 5 kg (11 lb$_m$) mass each. The centrifuge mechanisms include the cabs and rollers, as well as motors, belts and drive ring.

5.3.4.4 On-board System Mass. - The OLF on-board systems are described in Paragraph 5.4. Basic components of the environmental control, crew support, and electrical power systems in each MORL are identical to those of the present MORL design. Various revisions have been made to the communications and attitude control systems. The MORL laboratories have been replaced with the more extensive checkout and launch equipment in one MORL and the versatile repair and maintenance operation in the other.

The environmental control system includes life support functions of water and waste management. Oxygen regeneration by the Bosch process is added to the previously open oxygen supply and CO_2 removal system. The MORL systems are extended to the large bays and hub area by a combination of ductwork, fans and temperature control units which add about 1000 kg (2200 lb$_m$)to the MORL systems mass. The largest mass units associated with the bays and hub are the gaseous oxygen and nitrogen storage and distribution systems, which are over 700 kg (1500 lb$_m$).

The crew support system weights are based upon the recommendations of Paragraph 5.4.6. Liberal allowances are made for personal equipment and furnishings in an attempt to provide maximum comfort for the crew. Personal equipment is not considered part of the basic crew support provisions on the OLF proper. These items are listed separately with the crew, since they are carried on-board from the Apollo LSC. Lounge chairs and bunks of the living quarters have been considered as crew support items, rather than structural. Figure 5.3-22 shows the crew support mass details.

The communications system includes the functions of telemetry and data handling. Data processing, computing storage, and retrieval functions, however, are integrated with the checkout and launch system. About 100 kg (220 lb_m) is associated with the TV system, which is based upon having outside and inside cameras in each area of major activity and monitors in each MORL and hub. The communications wiring mass of 84 kg (185 lb_m) includes the wiring associated with the interconnection to the checkout and data processing equipment.

Attitude control and stabilization system dry mass is primarily due to the propellant distribution and tankage. Usable propellants are shown under the heading "Expendables". Residuals are included with the dry mass units. The mixture ratio of 1.81:1 for N_2O_4 and UDMH allows equal volume tankage.

Electrical power system mass is based upon the Isotope/Brayton Cycle System described in Douglas Report SM-48186. Shielding is required over a larger portion of the OLF fuel cell than that shown for the MORL. However, by locating the power units at the hub for greater exposure separation distance, the average thickness can be less. These changes together result in a total of 544 kg (1197 lb_m) of shielding, which is almost the same as that for the present MORL design. The Brayton Cycle Radiator Loop is included in the power system, however, the interface heat exchanger to the environmental control/life support system is included with the latter system.

5.3.4.5 Spares and Expendables. - The OLF spares and expendables requirements are reported in Paragraph 4.4. Spares are also included for the OLV, transtage, and orbital tankers.

5.3.4.6 Checkout Equipment Mass Analysis. - The checkout equipment mass includes data handling equipment, status control equipment, servicing equipment and gaseous and fluid supply tankage. Values for the mass of the checkout and launch components were provided by the Lockheed SCALE Study. The data handling equipment includes consoles, data storage units, data links, buffers, and recording equipment. Status control equipment includes the computer and control buffers.

The launch servicing equipment provides supply and measurement for filling, topping off and refilling OLV and transtage expendables. The propellants for the OLV and OLF are N_2O_4/UDMH;however, the transtage is presently designed for the Bell 8247 engines which use IRFNA/UDMH. It is assumed that the final design will have similar propellants for all modules and, consequently, the OLF design shows the tankage simply as N_2O_4/UDMH. The mass of the hyperbolic propellants, as specified by the SCALE Study, is 1812 kg (3986 lb), which has been used to size the tankage.

5.3.4.7 Allowances and Contingencies. - Allowances must be made for undefined mass, additional components not previously identified, and mass associated with load changes due to refined design analysis. It is also desirable to provide for the contingency of subsystem or facility configuration changes due to mission or method revisions. Various NASA agencies have recommended the use of up to 20% for overall contingency. However, following the practice of the Lunar Orbiter, MOLAB, and other Boeing programs, different contingency factors will be assigned to certain of the masses, depending upon the degree of mass analysis refinement and possible variations due to the factors noted. For some mission or method changes the mass may actually go down rather than up. The contingency mass is made up of the following factors:

Primary Structure	+ 5%
Other Structure	+15%
Crew Support	+15%
Checkout and Launch Equipment	+20%
Spares and Maintenance Equipment	+20%
Other Subsystems	+10%
Expendables	
Life Support	+ 2%
Propellants	+ 5%

Each factor is applied to the total mass of each item and the sum taken as the total OLF contingency. Life support and propellant contingency factors are low since sizeable other allowances and reserves, per Paragraph 5.3.4.2, have been included in the basic supplies. The factor for the primary structure, which includes meteoroid protection, is low since increased meteoroid fluxes and damage estimates are not expected. In fact, Pegasus data indicates that they may be lowered. A higher contingency factor has been used for the spares and maintenance equipment, primarily due to the low failure rates recommended by NASA for the spares optimization program.

FIGURE 5.3-21 LAUNCH CREW AND PERSONAL EQUIPMENT MASS SUMMARY

Five-Man Crew	408 kg	900 lb_m
Clothing	15	33
Personal Effects	9	20
Personal Recreation	11	25
Pressure Suits	78	172
TOTAL	521 kg	1,150 lb_m

FIGURE 5.3-22 CREW SUPPORT DETAIL MASS

	Mass	
	kg	lb_m
Personal Equipment (5-Man Crew)		
Shoes	5.0	11.0
Socks	.5	1.2
Shirts	2.4	5.4
Trousers	3.5	7.7
Belts	.8	1.7
Sandals	1.8	4.0
Gloves - Light	.3	.7
Handkerchiefs	.4	.8
Personal Kit	3.3	7.3
Personal Effects	5.7	12.5
Personal Recreation	21.1	46.5
Pressure Suits	78.0	172.0
TOTAL Personal Equipment	122.8	270.8
OLF Crew Support Equipment (12-Man Capacity)		
Personnel Provisions		
Sleeping Bags	6.0	13.2
Liners	4.4	9.6
Coveralls/Gloves - Heavy	4.8	10.5
Drawers & T-Shirts	8.7	19.2
Pressure Suits	93.6	206.4
Radiation Protection	127.0	280.0
EVA Backpacks (Dry)	87.0	192.0
Clothing/Suit Repair (Incl. in Maintenance)	---	---
Hygiene Provisions		
Toilet Sets	28.8	63.6
Sponge/Towel Sets	4.4	9.6
Haircut/Shaving Sets	1.8	4.0
Showers	10.9	24.0
Toilet (Incl. in Structure)	---	---
Household Provisions		
Laundry Equipment	90.8	200.0
Fire Extinguishers	53.1	117.0
Galley Equipment	68.0	150.0

FIGURE 5.3-22 CREW SUPPORT DETAIL MASS - Continued

Household Provisions - continued	kg	lbm
Reusable Food Containers	29.0	64.0
Vacuum Cleaning	9.1	20.0
Cleaning Equipment	13.6	30.0
Flashlights (Incl. in Maintenance)	--	--
Recreation/Information Provisions		
Microfilm Readers	18.2	40.0
Tape Units	27.2	60.0
Film/Slide Projector/Screen	20.4	45.0
Film/Tape/Slide Library	60.3	133.0
Game Set	13.6	30.0
Film Viewers	13.6	30.0
Film Developing Set	9.1	20.0
Binoculars	2.7	6.0
Small Telescope	4.5	10.0
Exercise Equipment	67.1	148.0
Trampolene	22.7	50.0
Medical/Dental Provisions		
Medications	18.1	40.1
Bandages	7.3	16.0
Medical Instruments	2.3	5.0
Dental Instruments	2.3	5.0
Medical/Dental Facility	36.3	80.0
Weighing Scales	18.2	40.0
Furnishing Provisions		
Lounge Chairs	27.2	60.0
Bunks	65.3	144.0
Mattresses	32.7	72.0
Chairs - Operations	27.2	60.0
Chairs - Dining and Recreation	7.2	16.0
Clothing/Equipment Containers	32.7	72.0
Zero "g" Restraint Provisions	40.8	90.0
Velcro Materials	22.7	50.0
Handholds and Rails (Incl. in Structures)		
Pressure Suit Closets (Incl. in Structures)		
TOTAL OLF Crew Support Equipment	1,240.7	2,735.1

5.4 OLF ON-BOARD SYSTEMS

This section describes the on-board systems of the initial OLF. Included are a discussion of the objectives, specific systems requirements, system trade studies, and detailed descriptions of the recommended or selected systems. Major systems categories are electrical power, guidance and navigation, attitude control and stabilization, environmental control, crew support, checkout and monitoring, and data management and communications.

5.4.1 General Objectives. - In the evaluation of the OLF subsystems, certain general objectives have been established. The principle objective was to utilize as much as possible the MORL subsystem configurations without modifications. Where this was not determined to be feasible, appropriate modifications were made and are described. During the performance of the OLF study, a concurrent MORL study effort was being performed by Douglas under the sponsorship of Langley Research Center. During this MORL study, several major changes were made in the systems of the MORL, particularly in the power supply and crew support systems. To maintain the maximum utilization of MORL hardware, the OLF systems were changed accordingly.

Other basic objectives include the need for simplification of service and maintenance in both the design and installation of these equipments. Subsystems are designed for optimum use of spares where maintenance and utilization of spares can eliminate redundancy and the attendant weight penalties. Redundancy has been incorporated to provide a high degree of reliability and crew safety for the life support and environmental control systems.

The design of the subsystems will minimize the need for extravehicular activities whenever possible.

In the following design analysis the major intent is to emphasize the significant characteristics associated with each subsystem relative to any unique features and/or technical problems. Where the subsystems are identical or nearly identical to those described in the MORL studies, this is noted and further descriptions are referenced to those studies.

5.4.2 Electrical Power. - Early in the development of the initial OLF design, a solar panel electric power system was being planned. This is reported on in some detail, although the final choice for the initial OLF was a Brayton cycle isotope system. Trade studies of these two systems, as well as consideration of a fuel cell system, are covered in the report.

5.4.2.1 Requirements. - Three mission phases establish a typical power load profile for the OLF. These are:

1. The launch phase, including orbital injection.

2. The time from approximately 17 hours to 42 hours after launch, during which the OLF accomplishes crew transfer, separation and deorbiting of the injection stage, extension of the MORL modules, and routine inspection and repair.

3. Routine operational phase, which includes the three discrete functions of hangar pump down, data transmission to Earth, and OLV checkout and launch.

One of the prime considerations to be evaluated in establishing the load profile for the OLF is in determining the power loading effects with respect to the use of oxygen regeneration in the crew support subsystem. Early OLF configuration studies did not incorporate oxygen regeneration capability and typical load requirements were determined to be as follows:

Average Load = 6.5 kW

50% AC (115/200 volts ±2%, 3 phase, 400 cps)
25% Regulated DC (28.0 ± 0.5 volts)
25% Unregulated DC (24-31 volts)

Peak Load = 8.9 kW

Energy required from launch to normal activation = 145 kW hours

Emergency load = 1.5 kW

The use of oxygen regeneration will require approximately 5.4 kW of additional power if solar cells are used and 3.5 kW if an isotope power system is utilized.

5.4.2.2 Technical Studies. - Three basic electrical power systems were evaluated for use on-board the OLF. The technical studies associated with each will be discussed separately.

5.4.2.2.1 Solar Panel Evaluation. - Early OLF electrical power system studies were based on the use of a solar array to provide the primary power capability. At this time the use of oxygen regeneration was not included in the basic OLF configuration. The associated OLF power profile is shown in Figures 5.4-1 and 5.4-2. These figures represent the power requirements for the launch phase prior to activation of the solar array and during checkout of the OLV and during hangar pumpdown, respectively.

The initial electrical loads reflect the OLF launch and orbital injection period. During the time from approximately 17 hours after launch to the time when the solar cells are deployed and activated (42 hours), the OLF accomplishes crew transfer, separation and deorbiting of the transtage, extension of the MORL Modules, and routine inspection and repair. Checkout of the OLF subsystems will be accomplished after the deployment of the antennas and activation of the reaction control and stabilization subsystem to permit solar alignment. The total load requirements during this period are 145 kWh.

Two discrete modes of operation are indicative of the OLF operational power loads. The first is during the period when the hangar areas are pumped down. It is assumed that this event occurs once per week and requires six hours to accomplish and two kW of power (refer to Figure 5.4-2).

The second mode indicates the power demand during the typical checkout phases of the OLF, OLV, or logistics vehicles.

Also reflected in both of these profiles is the communication peak power requirement of 1.35 kW. This value is shown for a typical communication period of 8 minutes between Earth and OLF. The peak power is shown to be 8.9 kW and is concurrent with this data transmission period.

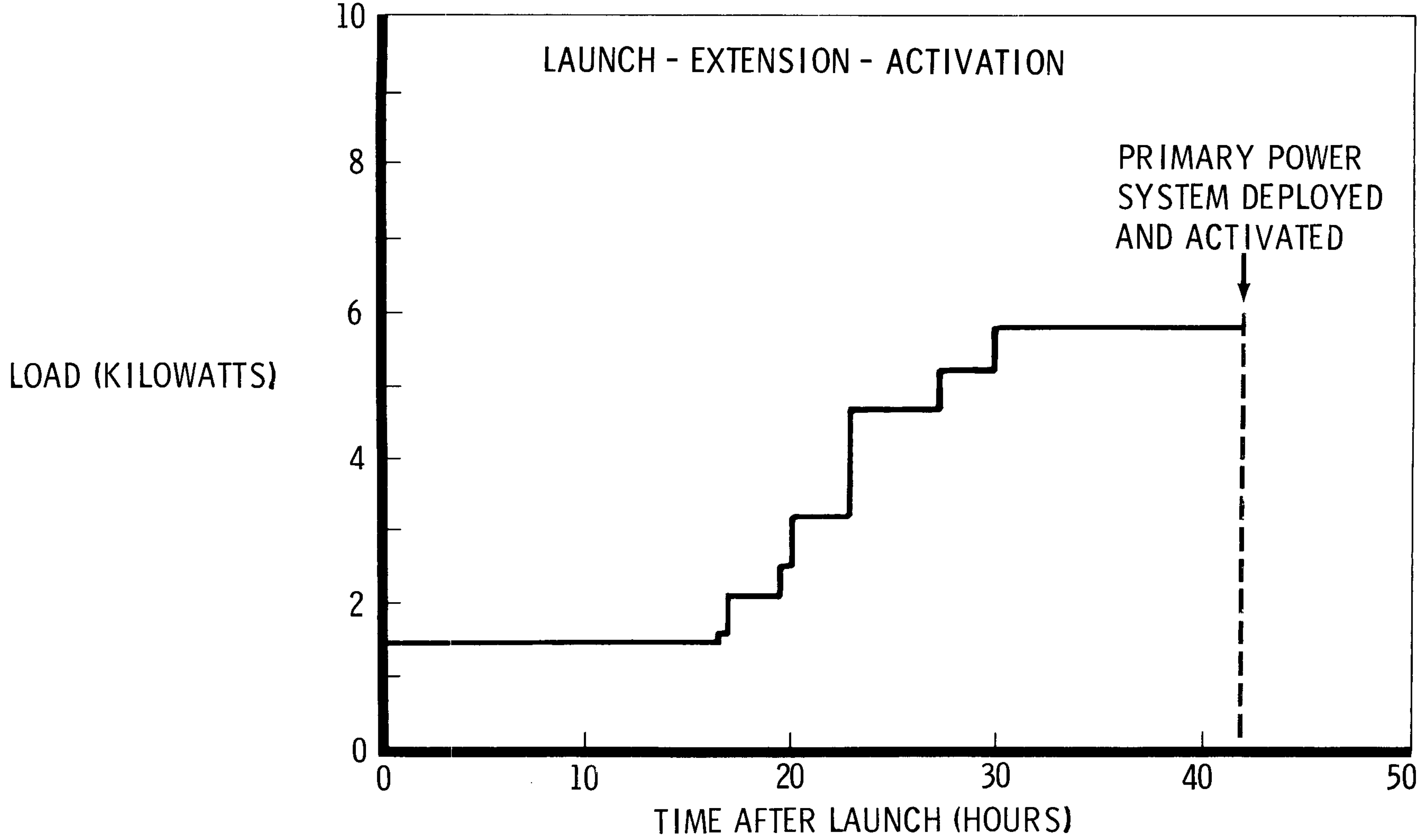

Figure 5.4-1: TYPICAL LOAD PROFILES - LAUNCH

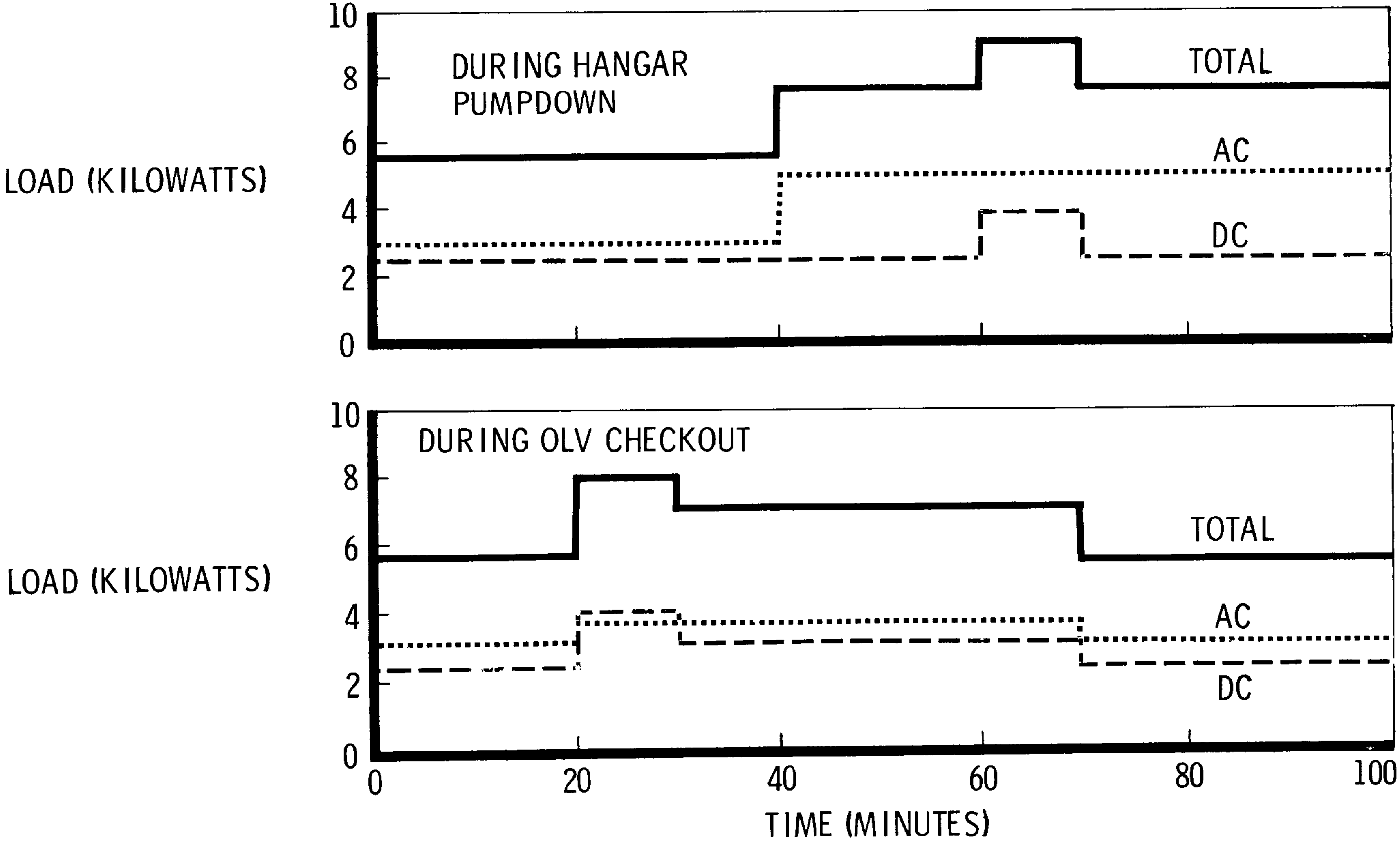

Figure 5.4-2: TYPICAL LOAD PROFILES - ORBIT

In establishing the initial baseline OLF electrical power system, the weight characteristics were of prime importance due to the extended mission life of the OLF. Figure 4.5-3 represents the required mass of the electrical system as a function of mission duration. The curve shown reflects a 10% year allowance for degradation of the solar cells by meteorites, ultraviolet radiation, thermal cycling, and Van Allen radiation. It was assumed that the regulators, battery chargers, batteries, inverters, and controls would have to be replaced each 1-1.5 years. For longer missions, more spares will have to be carried for replacement of failed components and more redundancy must be provided in the wiring for the distribution system and the essential busses.

Solar Cell Panel Construction Analysis

Mounting Methods. - There are three general methods of mounting solar cells on spacecraft frames today; non-oriented body-mounted cells, non-oriented paddle, and oriented panel.

Non-oriented body-mounted cells are fastened to the spacecraft skin either directly or on light metallic substrates which are then attached to the satellite. As these spacecraft are spin stabilized, they require at least four complete patches of cells to assure that the equivalent of one patch is continuously illuminated. The solar cells in this configuration can be temperature-controlled fairly easily because the spacecraft acts either as a heat sink to the cells when in the sun or as a heat source to the cells while in eclipse. Only a part of the cells are illuminated and working at one time, hence the array efficiency of body-mounted cells is quite low. Present day body-mounted array efficiencies range from one to two percent. The largest factor which prevents substantial improvement in array efficiency is the redundancy necessary to maintain constant power. Body-mounted arrays have a unit mass of around 6.34 to 7.31 kg/m^2 (1.3 to 1.5 lbm/ft^2) for todays systems. This includes some mass which could be attributable to the spacecraft structure.

Solar paddles have proved particularly effective for medium-sized spacecraft which require spin stabilization in a plane perpendicular to the ecliptic. Being a separate appendage of the spacecraft, they may be temperature controlled when in the sun, but will cool rather quickly when in eclipse. The paddle can be very light on a pounds per square foot basis because one substrate will support two cell surfaces. Values on operational spacecraft range from 3.82 to 4.8 kg/m^2 (0.8 to 1.0 lbm/ft^2) of array surface. Since some of the panels are shaded, the array efficiency ranges from one to two percent. Pitch angles of paddles can be adjusted within limits to reduce the modulation in power output seen on body-mounted arrays. The paddles leave the surface of the spacecraft free for mounting experiments, detectors, scanners, and radiators.

The most efficient solar array is the oriented panel. Typical of such arrays are on OSO (already flying), Nimbus, OGO, and the Mariner series of spacecraft. Redundancy is eliminated but the cells, being oriented toward the sun, operate at higher temperatures than the cells in non-oriented arrays. While the latter may operate at or below room temperature, the oriented array at one astronomical unit will warm to as high as 80°C. While this temperature reduces the efficiency of the solar cells by some 25 percent, the need for only one active surface results in array efficiencies of 6 to 7 percent. Since present panel structures are rather bulky and must withstand the rigors of launch, their mass ranges

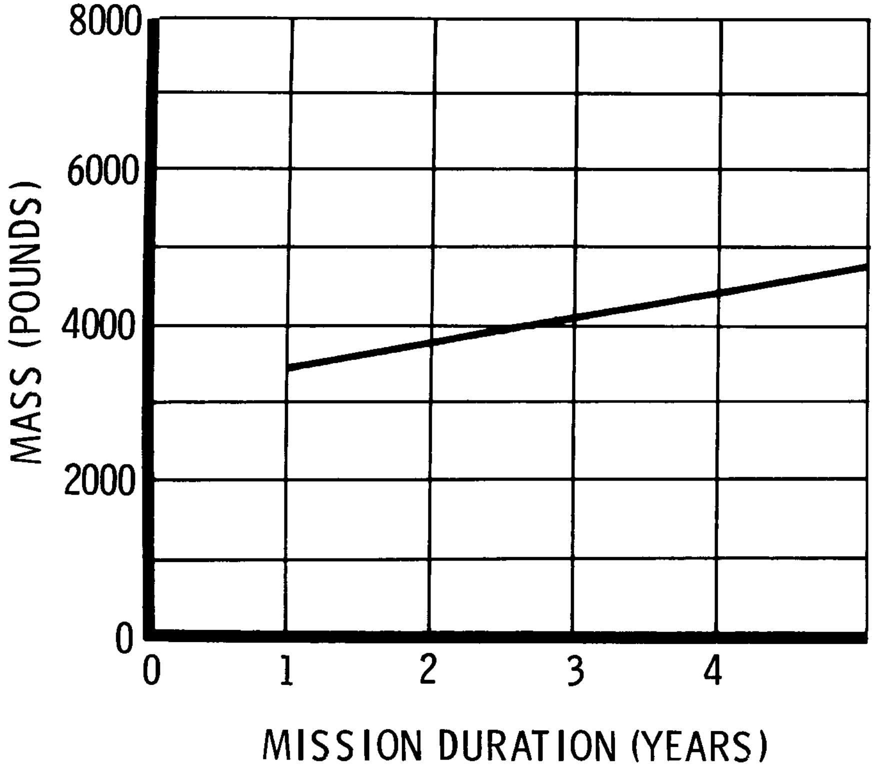

10% PER YEAR ALLOWANCE FOR DEGRADATION OF SOLAR CELLS

NiCd OR AgCd BATTERIES, LIFETIME ASSUMED ~ 1.5 YEARS

MASS INCLUDES REGULATORS, BATTERIES AND CHARGERS, INVERTERS, CONTROLS, DISTRIBUTION WIRING, AND EITHER FUEL CELL OR ZOX BATTERY FOR POWER DURING LAUNCH AND EXTENSION PERIOD

Figure 5.4-3: BASELINE ELECTRIC POWER SYSTEM MASS from 5.86 to 7.82 kg/m^2 (1.2 to 1.6 lbm/ft^2). These panels have large areas with low thermal mass that can radiate into space. As a result, the panels will be subjected to wide and rapid changes in temperature if they are not continuously illuminated. Sunlight equilibrium temperatures of 50-60°C are common, while eclipse conditions will plunge the panel temperature to -100°C or lower. This places enormous thermal stresses in the solar array and the cells. Orbits such as Nimbus experience these temperature extremes and require the strongest available solar cell bonding and most flexible interconnection techniques using materials whose thermal expansion rates are approximately equal. Some typical spacecraft power system characteristics are shown in Figure 5.4-4. Neither the weight nor conversion efficiency of the power conditioning equipment is included in this figure.

Modules. - For solar cells to be useful, they must be interconnected to produce voltages and currents that can be effectively used by the spacecraft electronics. There are two principal ways to interconnect into solar cell modules; shingling and flat mounting.

Shingled cells are attached to each other in stair-step fashion, which connects the cells in series electrically. Each cell is then covered with a cover glass, and the module is bonded to an insulating substrate with a flexible silicon-rubber adhesive. One of the biggest problems with shingled panels is the replacement of broken or damaged cells in a panel. Usually, an entire module must be replaced.

Flat-mounted cells are becoming popular because of the ease in replacing broken cells, more freedom in series-parallel interconnection, better heat dissipation, and perhaps stronger bonding to the array. There is a slight penalty in reduction of active area per unit of projected area due to the bus bar of each cell being exposed, but the module packing factor (ratio of active area to total gross area) is high. The top bus bar contacts must be connected with a conductor which has an expansion loop. This produces an obstruction above the surface of the cells and introduces minor handling and maintenance problems on the ground.

Photovoltaic Concentrators. - Another form of oriented panel is the concentrating panel. Concentrated sunlight increases the power output of solar cells, thus reducing the number of cells required to produce a given amount of power in a spacecraft. Configurations having concentration ratios of five and greater have generally not been practical because the resulting heat could not be dissipated in space from the solar cells by simple, static means. Concentration ratios of 2.5 and less have proved to be more practical.

One concept developed at Boeing has solar cells mounted in troughs, where the direct sunlight reaching the cells is supplemented by sunlight reflected from the trough sides (Fig. 5.4-5). The solar cells are mounted on the same aluminum which also forms the reflecting surfaces. Thus, heat is readily conducted from the solar cells to the radiating surfaces, which include the reflectors, to keep the cells cool. The series of troughs and V-ridges form a useful structural element. Power concentration ratios of around 1.9 have been measured in solar tests.

Another development employs a concentrator similar to the V-ridge concentrator in that the solar cells are mounted in troughs; however, structural strength is achieved with honeycomb, and the panel is flexible enough to wrap around a spacecraft body. Silvered-glass reflectors are used.

CRAFT	STABILITY	CELL MOUNTING	MASS ~ kg			WATTS ▷1	WATTS/kg		ARRAY AREA SQ. METERS	OVERALL W/m^2	ARRAY EFF %	TEMP. °C	REF.
			ARRAY ⓕ	STORAGE	POWER SYSTEM		ARRAY	SYSTEM					
OAO	Non-Oriented	Paddle	101.0	80.3	180.0	772.0 ⓐ	7.7	4.3	17.4	44.6	3.2	---	1
UK-1	Non-Oriented	Paddle	3.4	6.3	10.3	11.7	2.9	1.1	1.02	11.6	0.85	---	1
Exp. XII	Non-Oriented	Paddle	5.0	3.8	7.8	20.4	4.1	2.6	1.42	14.0	1.0	---	---
Exp. XIV	Non-Oriented	Paddle	5.8	3.8	6.6	34.7	5.9	4.0	1.42	24.8	1.8	---	---
IMP	Non-Oriented	Paddle	1.2	3.03	15.0	74.3	6.2	4.7	2.67	28.0	2.0	---	---
OSO (S-16)	Oriented	Panel	2.36	13.6	16.2	31.0	13.2	1.9	0.37	82.9	5.9	70	1
EGO	Oriented	Panel	49.0	29.5	78.5	535.0	11.0	6.8	7.25	73.2	5.3	80	1 *
Nimbus B	Oriented	Panel	35.4	51.3	86.5	470.0	13.2	5.5	4.47	105.5	7.5	60	1 *
Boeing V - Ridge	Oriented	Panel	6.6	----	-----	119.7	18.1	---	1.75	68.6	6.1	100	---
Mariner 2	Oriented	Panel	21.4	----	-----	225.0	10.6	---	2.37	94.9	6.0	49	2
Mariner C	Oriented	Panel	15.9	----	-----	-----	----	---	6.5	-----	---	---	3
Relay	Non-Oriented	Body	11.7	12.7	24.4	35.0	3.1	1.4	1.63	21.5	1.5	---	1
Tiros (α = 45°)	Non-Oriented	Body	11.1 ⓒ	18.2	28.2	51.0	4.6	3.9	1.64	31.2	2.2	---	1

ⓐ- Average power output between cold and hot panel

ⓒ- Does not include aluminum housing over instruments upon which cells are mounted

ⓕ- Array mass includes solar cells, cover glass, substrates, adhesives, and wiring harnesses

▷1 Watts at normal incidence

Ref. 1 - "Solar Cells and the Applications Engineer," W. R. Cherry, Astronautics and Aerospace Engineering, May 1963. *Corrected to 4/64.

Ref. 2 - "Mariner 2 Solar Panel Design and Flight Performance," J. A. Zoutendyk, R. J. Vondra, A. H. Smith, JPL Report, April 11, 1963.

Ref. 3 - "Jet Propulsion Laboratory Internal Monthly Progress Report."

Figure 5.4-4: TYPICAL SPACECRAFT SOLAR CELL CHARACTERISTICS

CONCENTRATING SOLAR CELL PANEL

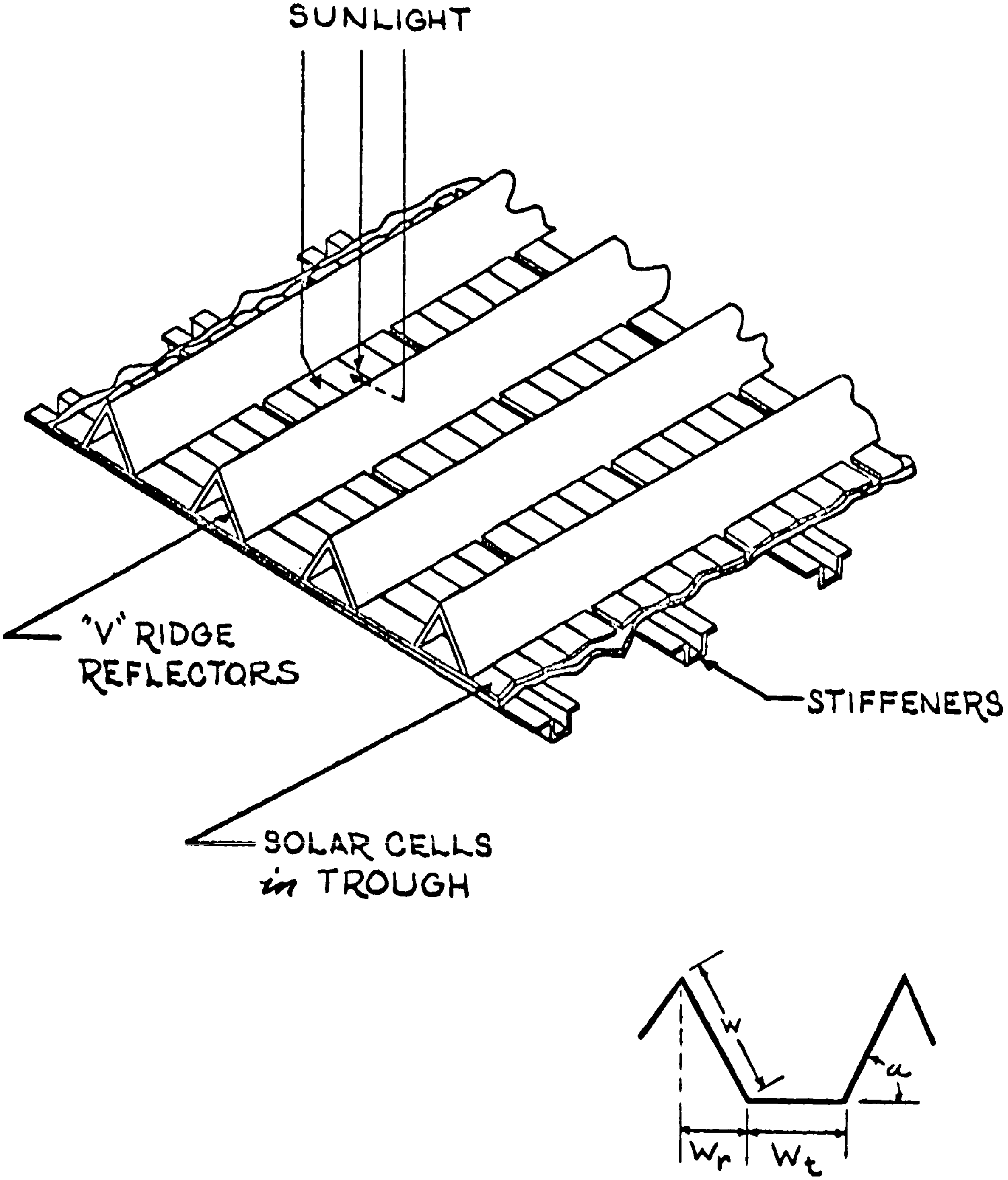

Figure 5.4-5: CONCENTRATING SOLAR CELL PANEL

Performance of V-Ridge Concentrating Panel. - A portion of the light impinging on the reflector surfaces is lost due to the absorptance of the reflective material. In some cases this absorption loss is compensated by other factors. For example, in the vicinity of Mars the low solar intensity of around 58 milliwatts per cm^2 causes a P/N solar cell in a concentrating panel to operate at a lower efficiency than it would have in the brighter sunlight near Earth. On the other hand, in a concentrating panel, the solar cell at Mars would see over 100 milliwatts per cm^2 light intensity, thus retaining high efficiency.

Concentrating panels have unit weights of about 2.4 to 3.82 kg/m^2 (0.5 to 0.8 lbm/ft^2) and are significantly lighter than non-concentrating panels. Since fewer expensive solar cells are required, concentrating panels are also less expensive than conventional panels. However, due to the reflection losses, a concentrating panel may require more area than an equivalent conventional panel having the same output.

Panel Design Factors. - To compute the expected performance of a solar cell panel in space, it is necessary to consider certain factors and the effect of these factors on performance. A detailed discussion of these factors can be found in Boeing document D2-20311-1, "Design Manual for Spacecraft Electrical Power Subsystems - Solar Cell Panels," (Reference).

Radiation damage to solar cells is a major consideration in the design of the power system. Great progress has been made by changing from the 1 ohm-cm P/N cells during the last year. Resistance to 1 million-electron-volt (Mev) electrons has been enhanced by a factor of 10, while a gain of 3 has been made in resistance to 5 Mev protons.

Ten ohm-cm silicon solar cells are now available in production and may be used where severe radiation problems outweigh the necessity of attaining initial high power output from the cells. The 10 ohm-cm N/P silicon cell allows another factor of 2 for the protons, and a factor of 6 improvement for 5 Mev protons and a factor of 50 for 1 Mev electrons over the P/N cells available recently. Other developments under way are expected to increase this margin by another substantial amount.

Figures 5.4-6 and 5.4-7 show the degradation in output of solar cells as a function of radiation dosage. This degradation can be reduced by installing thick cover glasses. The computation of the required cover glass thickness is involved and is beyond the scope of this document.

Recent radiation damage studies on various adhesives used to secure the cover-glasses to the solar cells show the need to eliminate all organic materials from exposed locations. Certain furane base adhesives show excessive discoloration and reduction in transmission up to 24 percent at 0.5μ after 10^{16} 1-Mev electrons. An exposure of ultraviolet equivalent to 630 hours of space level sunlight reduced its transmission by 43 percent at 0.5μ and 27 percent at 0.7μ. Silicon-base adhesives, in contrast, decrease in transmittance by 1.7 percent at 0.5μ and 1.1 percent at 0.7μ after 10^{16} 1-Mev electrons and 23 percent at 0.5μ and 8.6 percent at 0.7μ after 630 hours of space equivalent ultraviolet. New and better adhesives are badly needed and hopefully can even be eliminated.

Cover glasses for solar cells have also been irradiated and show wide variation in transmission from material to material. Radiation-resistant fused silica or

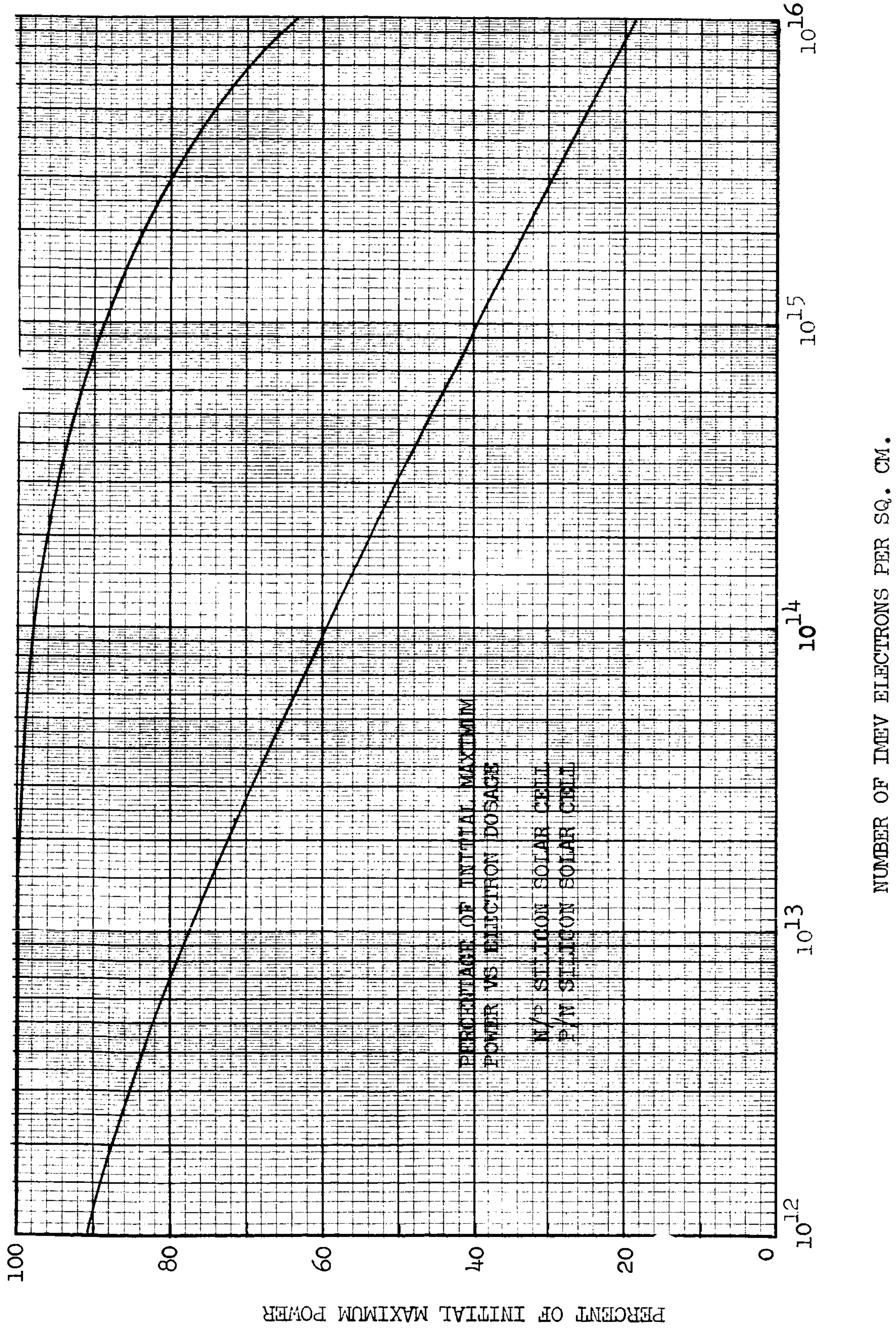

Figure 5.4-6: ELECTRON DOSAGE SOLAR CELL DEGRADATION

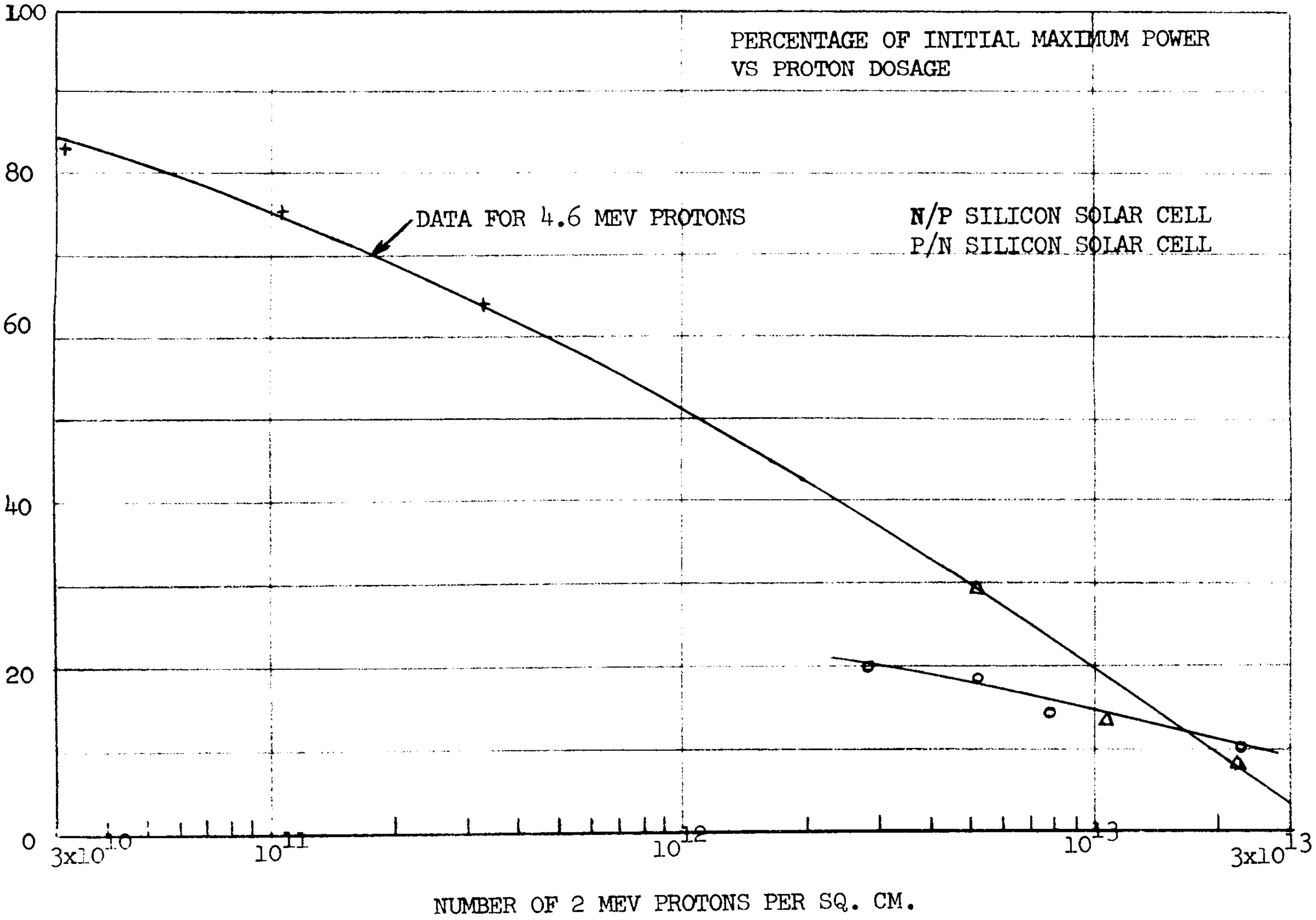

Figure 5.4-7: PROTON DOSAGE SOLAR CELL DEGRADATION

sapphire covers will maintain their original transmittance much more readily in an electron, proton, or ultraviolet environment than other glass-type covers examined. Most spacecraft designers have heeded these findings and are incorporating the best materials into their spacecraft.

Micrometeorites will damage the cells by sand blasting the surface of the cover glasses, causing them to become diffuse. Detailed data on micrometeorite mass population and the effect these collisions will have on solar cell performance is not available at this time in such form as to permit accurate computation of degradation from this cause.

Power Distribution and Conditioning. - Preliminary analysis based on the OLF requirements indicates that the weight of the shielded cables, power cables, connectors, junction boxes, and power control panels will be approximately 45.3 kg/kW (100 lb/kW). Power distribution losses will be approximately two percent.

Figure 5.4-8 presents parametric data for the power conditioning equipment that will be required to provide power to those loads that cannot utilize the unregulated DC output of the solar panels.

Three of the solar cell parameters, array weight, area, and stowed volume, are shown as a function of solar array output power in Figure 5.4-9. If it is assumed as an extreme that all losses, exclusive of the battery charger losses, are 35 percent of the load power, then the solar array area required as a function of load power is that shown in Figure 5.4-10. It is expected that a detailed study will show requirements that lie somewhere between those shown in the figures indicated above.

The effects of light fraction of the orbital period on the solar array area required for a given DC bus power are presented in Figure 5.4-11. Subsystem losses of 35 percent will result in the array areas shown in Figure 5.4-12. The increase in array area with decreasing light fraction is a consequence of battery charging requirements, assuming that the same power levels will exist during the dark period as during the light period. This also results in an increased energy storage requirement for the battery. Battery weights versus light fraction of orbital period for typical power levels are shown in Figures 5.4-13 and 5.4-14, where Figure 5.4-13 represents load power, and Figure 5.4-14 assumes 35 percent losses in the subsystem.

In all of the claculations performed for the solar arrays, it has been assumed that, through passive thermal control means, the solar cells will operate at 65°C during light portion of orbit. The effect of temperature on cell performance is significant, and it is shown in Figure 5.4-15 for three cell efficiencies. A schematic of a typical solar cell electrical power subsystem is illustrated in Figure 5.4-16. The weight of the entire subsystem, exclusive of deployment and orientation components, is shown in Figure 5.4-17. An important point to note is that subsystem losses were assumed to be 20 percent of the raw power output from the solar cell array. This figure is somewhat low, but probably more realistic than the 35 percent (which might be considered "worst case") assumed for that of the preceding parametric data.

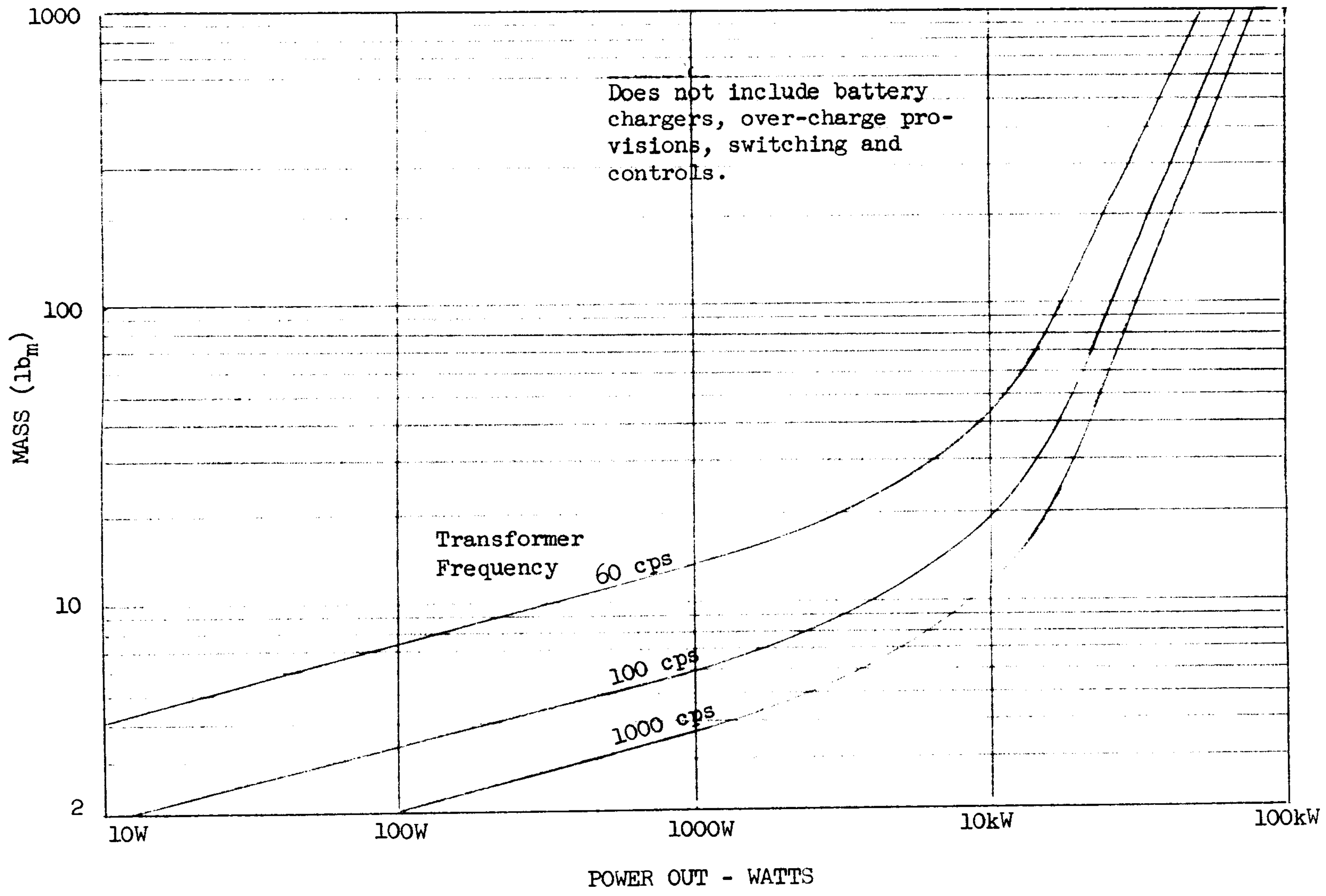

Figure 5.4-8: STATIC POWER SUPPLY MASS VS OUTPUT

NOTES:

- Solar cell efficiency 10%, tungsten rated.
- 25% volume allowance for stowage.
- Power conversion losses not included.

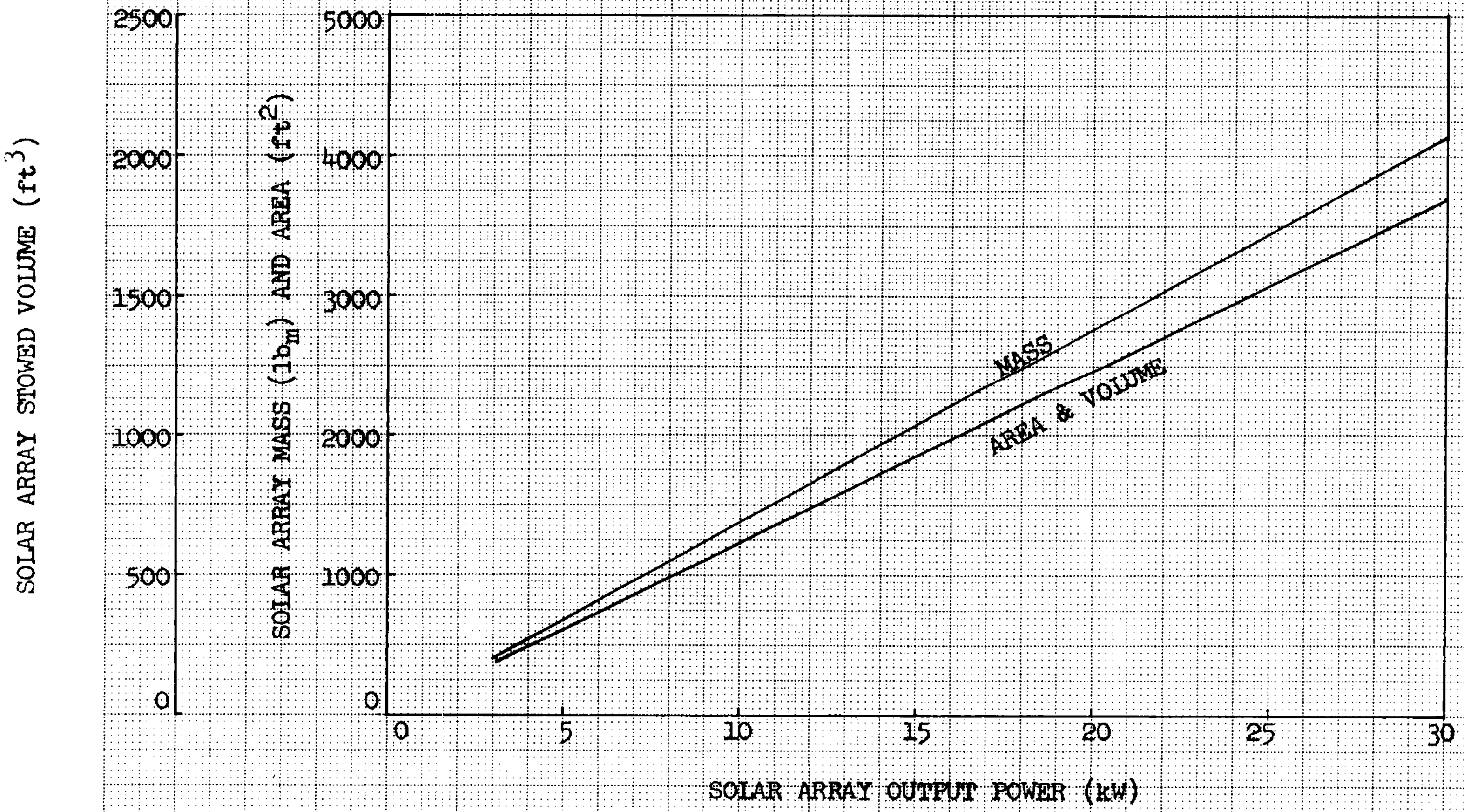

Figure 5.4-9: SOLAR ARRAY PARAMETERS

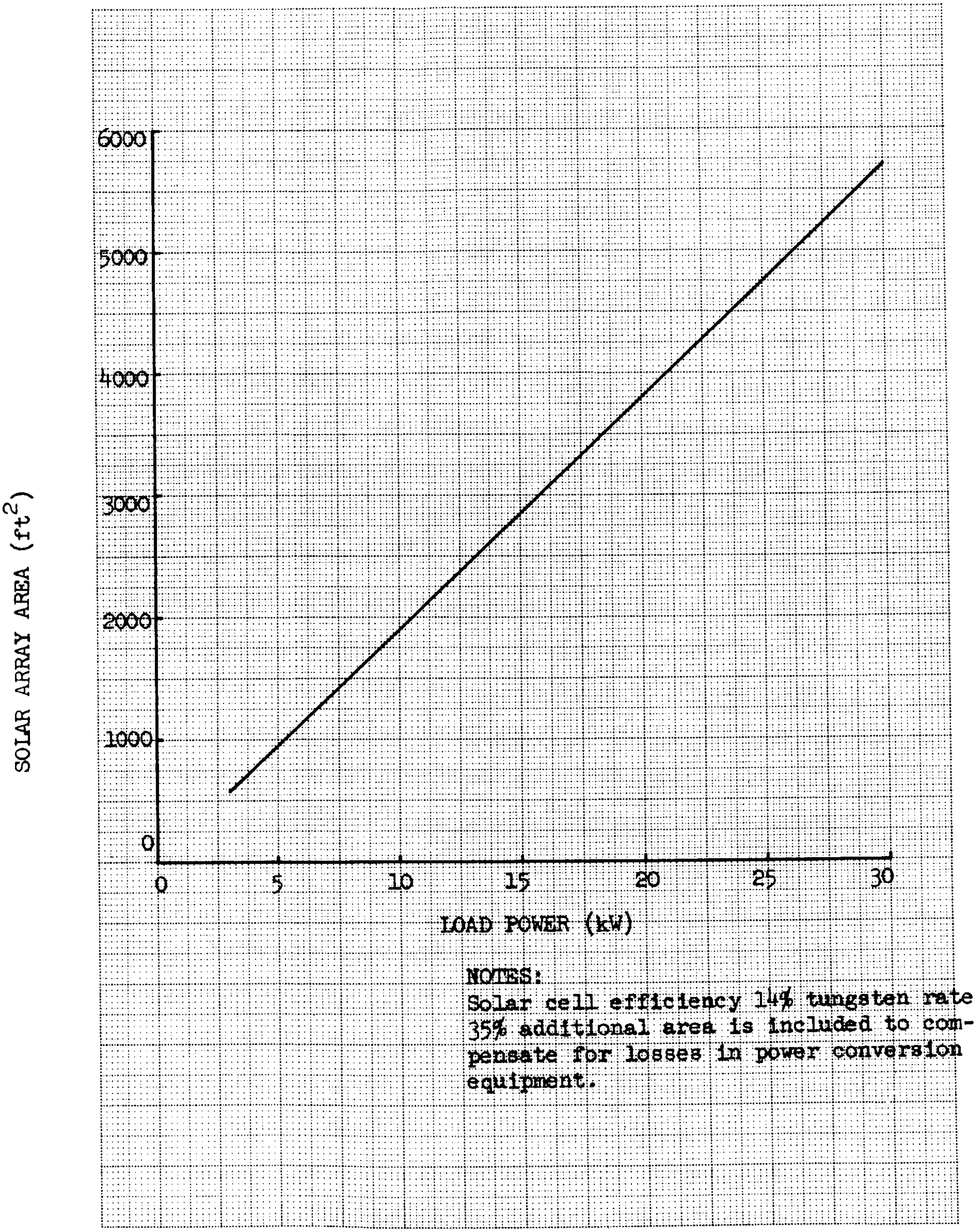

NOTES:
Solar cell efficiency 14% tungsten rated.
35% additional area is included to compensate for losses in power conversion equipment.

Figure 5.4-10: SOLAR ARRAY AREA WITH CONVERSION LOSSES

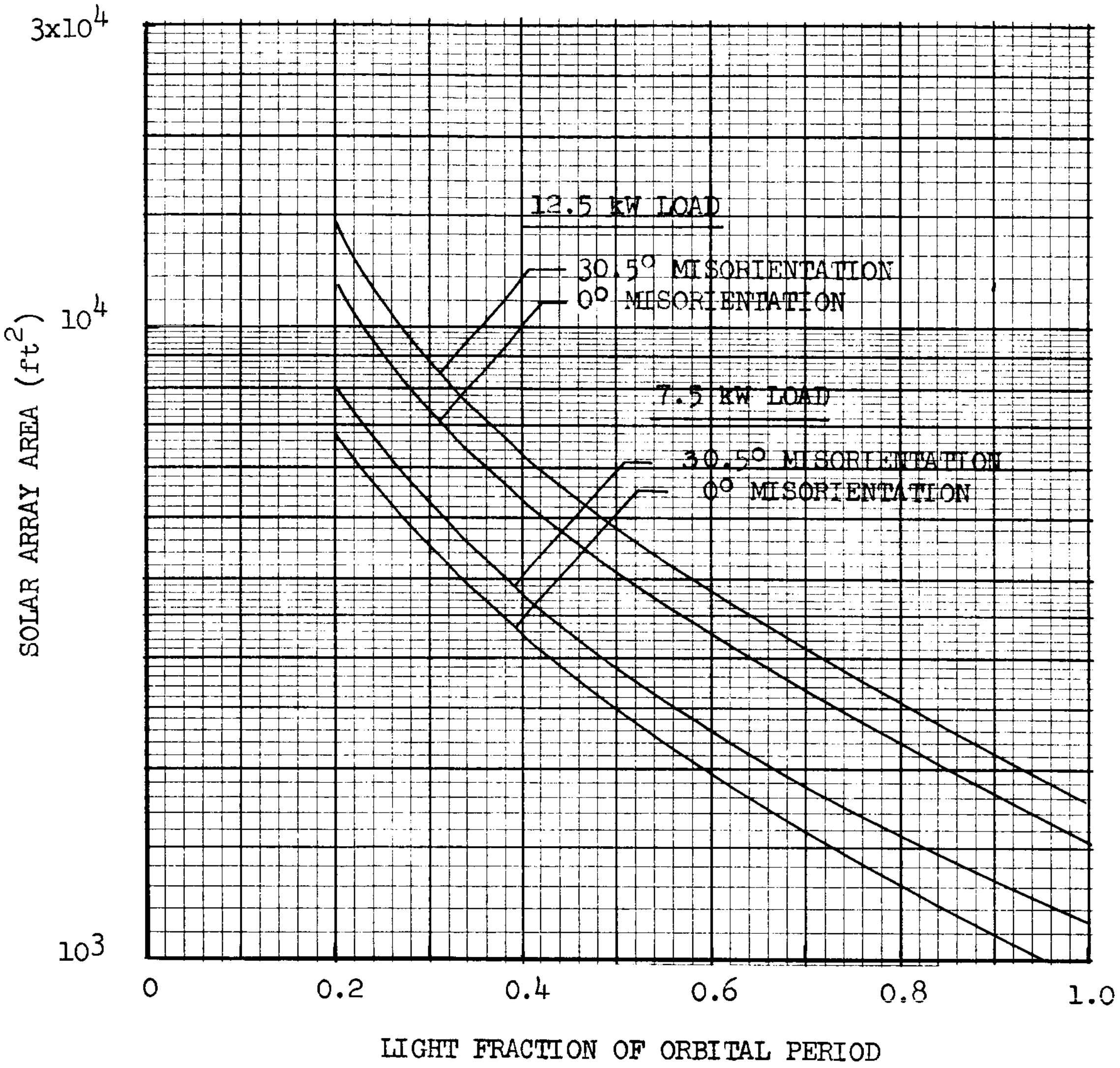

NOTES:

- Battery supplies power during occultation and must be recharged during light periods
- Battery charge-discharge efficiency is 70%
- Battery charger efficiency is 85%
- Solar array temperature is 65°C.
- Solar cell efficiency is 14% tungsten rated
- Constant load. Load shown is power delivered to D.C. bus
- Conversion losses not included

Figure 5.4-11: ORBIT PARAMETERS VS SOLAR ARRAY AREA

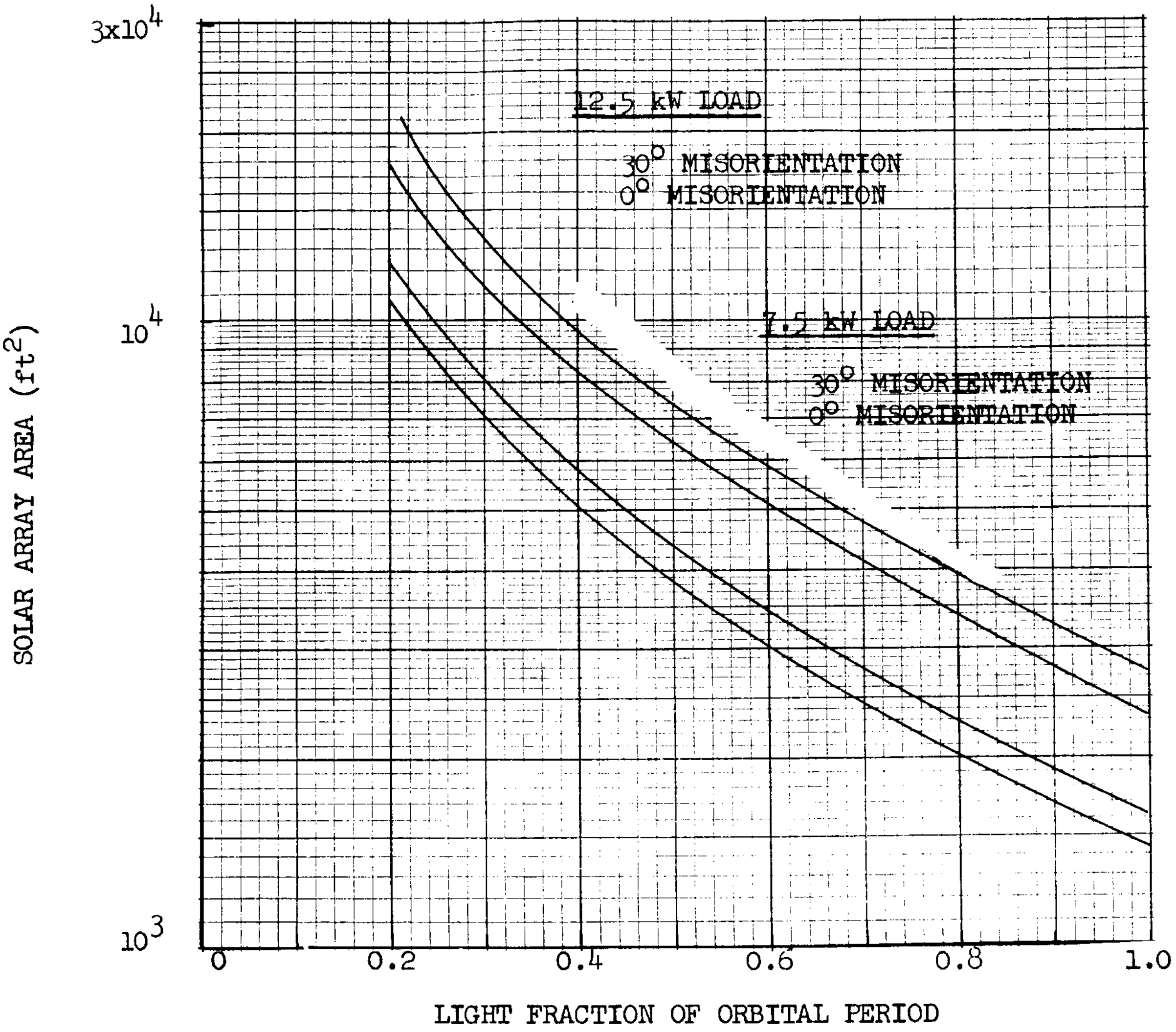

NOTES:

- Battery supplies power during occultation and must be recharged during light periods.
- Conversion losses are 35% of raw power delivered.
- Battery charge-discharge efficien is 70%.
- Battery charger efficiency is 85
- Solar array temperature is 65°C.
- Solar cell efficiency is 14% tungsten rated.

Figure 5.4-12: ORBIT PARAMETERS VS ARRAY AREA WITH CONVERSION LOSSES

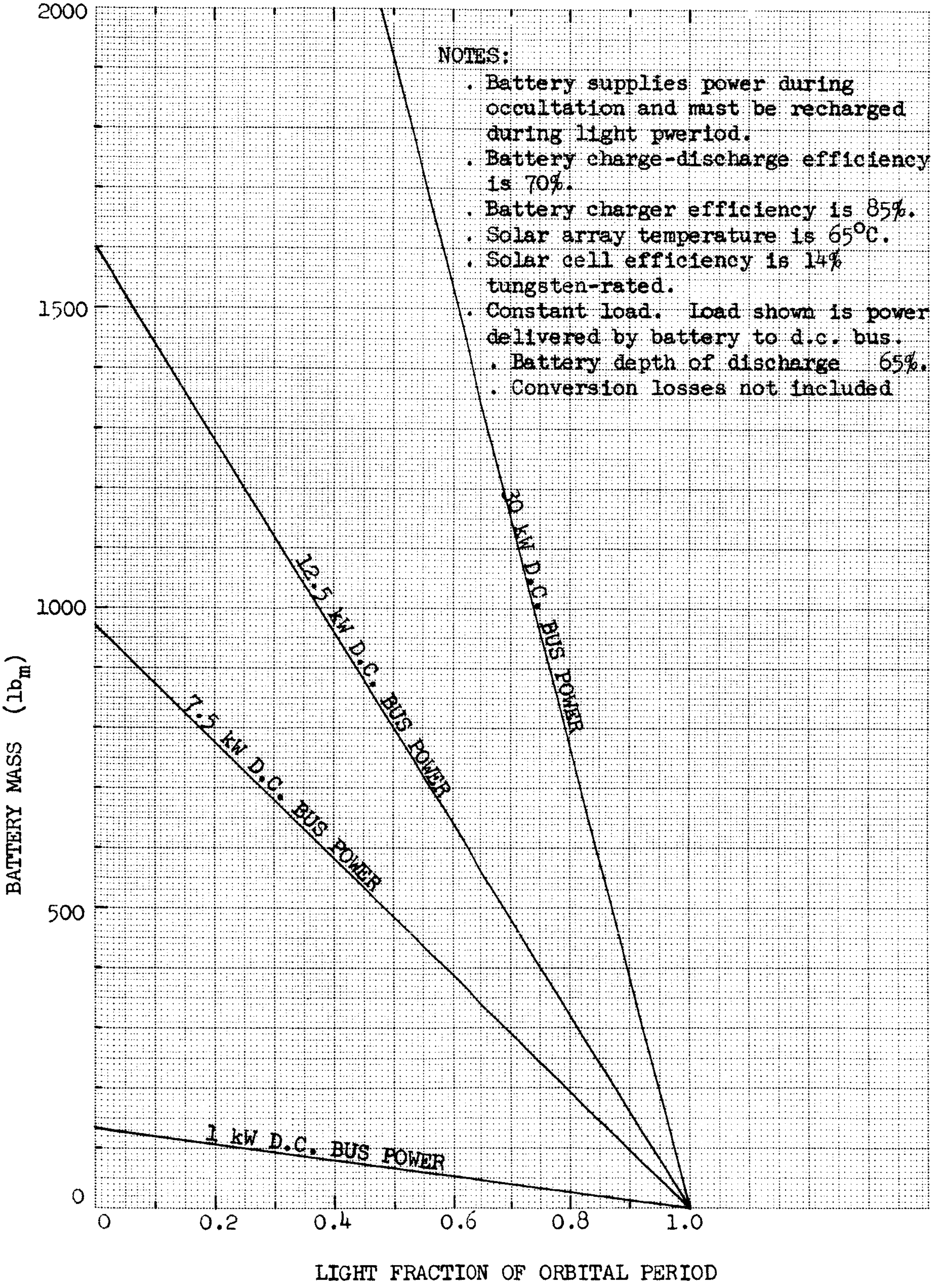

Figure 5.4-13: BATTERY MASS VS LIGHT FRACTION

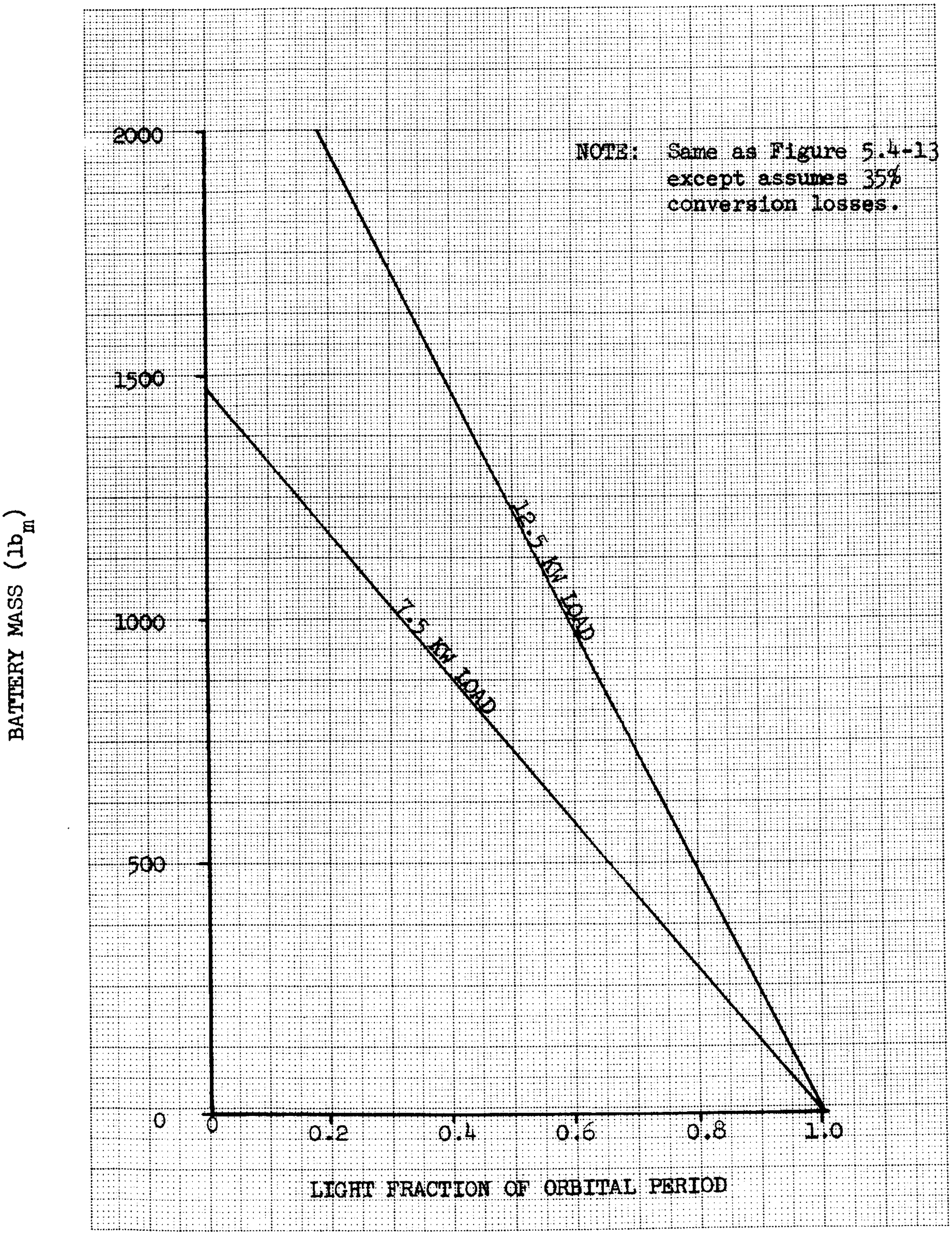

Figure 5.4-14: BATTERY MASS VS LIGHT FRACTION WITH CONVERSION LOSSES

NOTES:

- Solar cell efficiencies determined under the following standard conditions:
  - Light source Tungsten lamp, 2800°C
  - Intensity 100 mW/cm^2
  - Cell temperature 28°C
- Assumed solar intensity: 130 W/ft^2

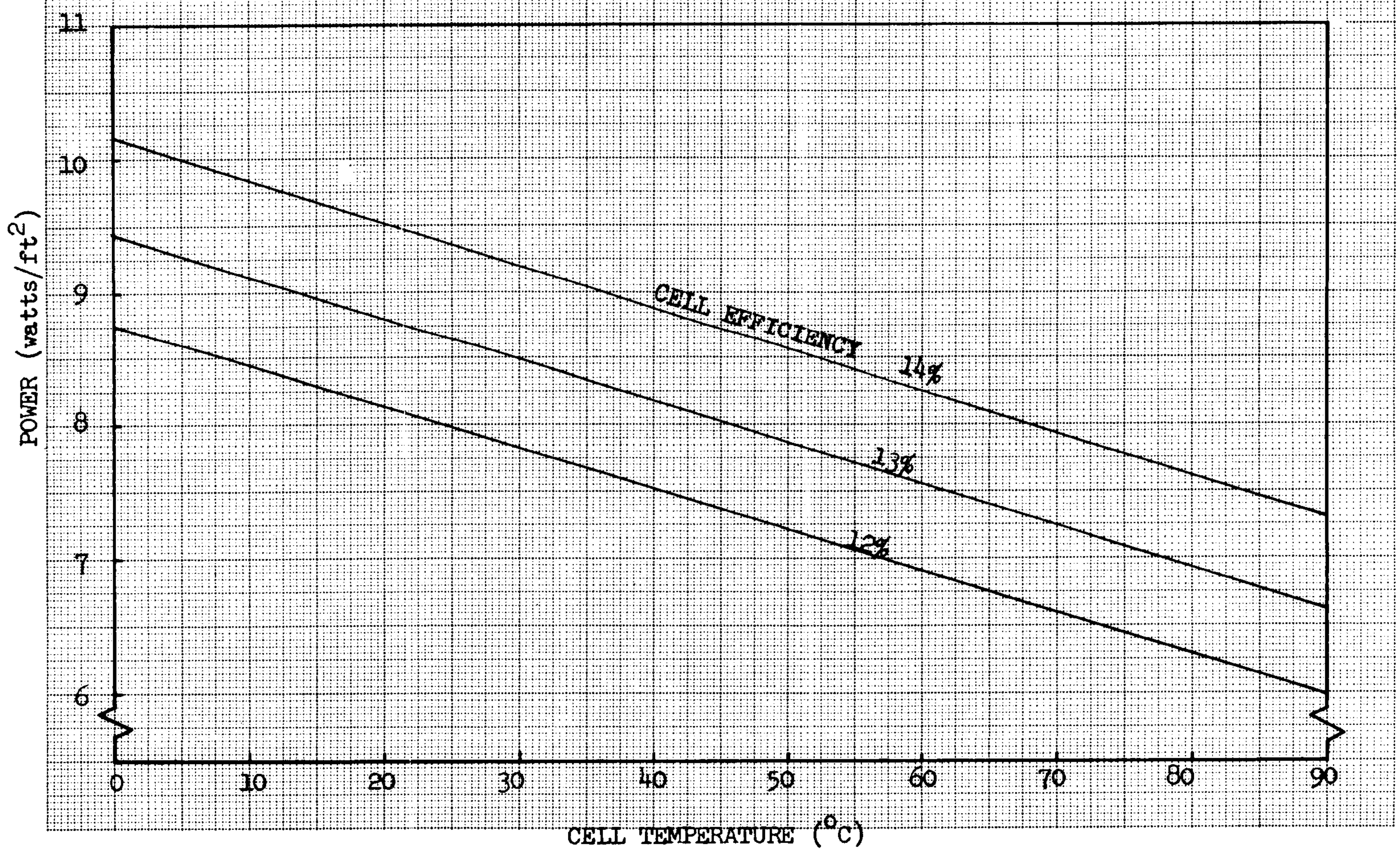

Figure 5.4-15: SOLAR CELL PERFORMANCE VS TEMPERATURE

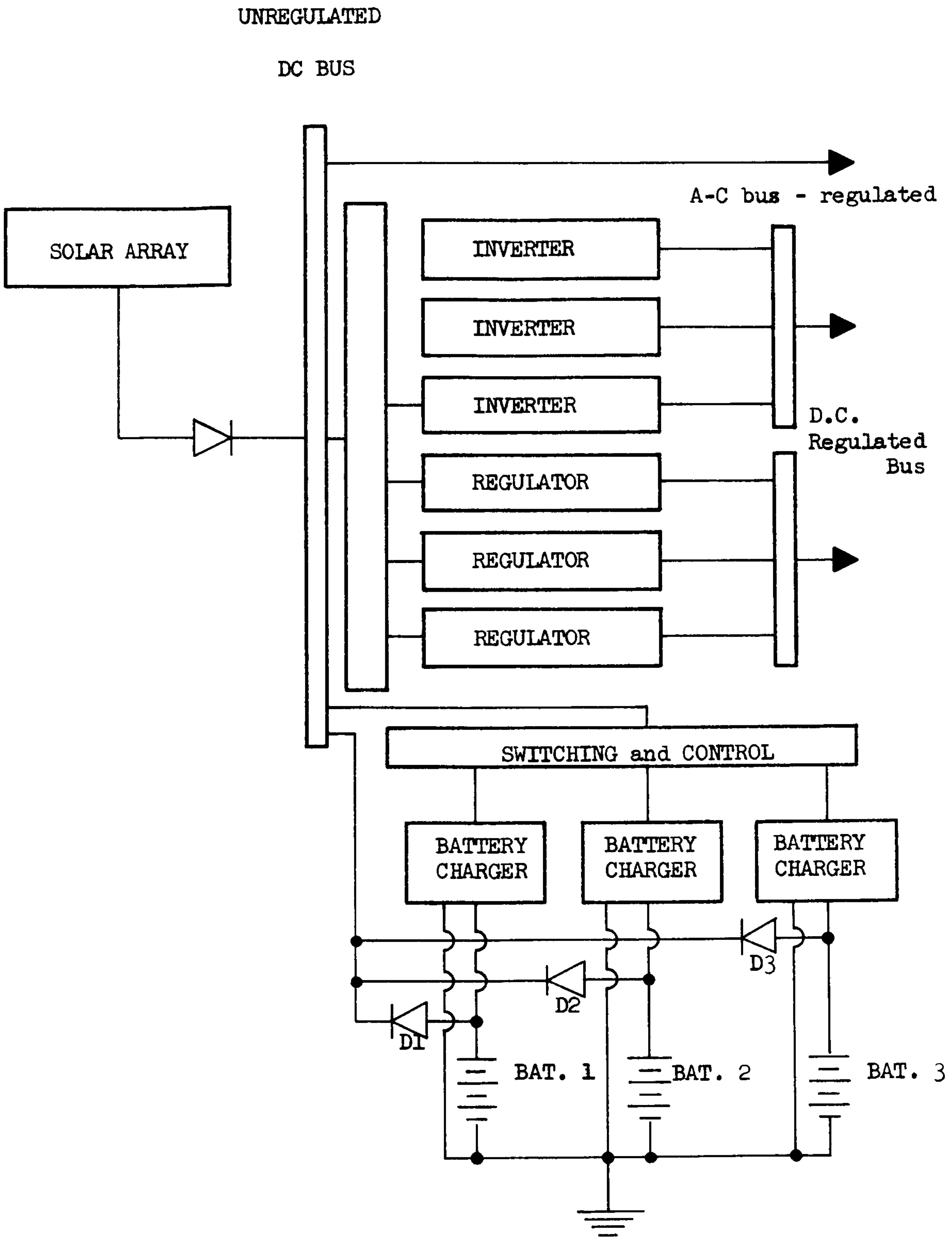

Figure 5.4-16: SOLAR CELL ELECTRIC POWER SCHEMATIC

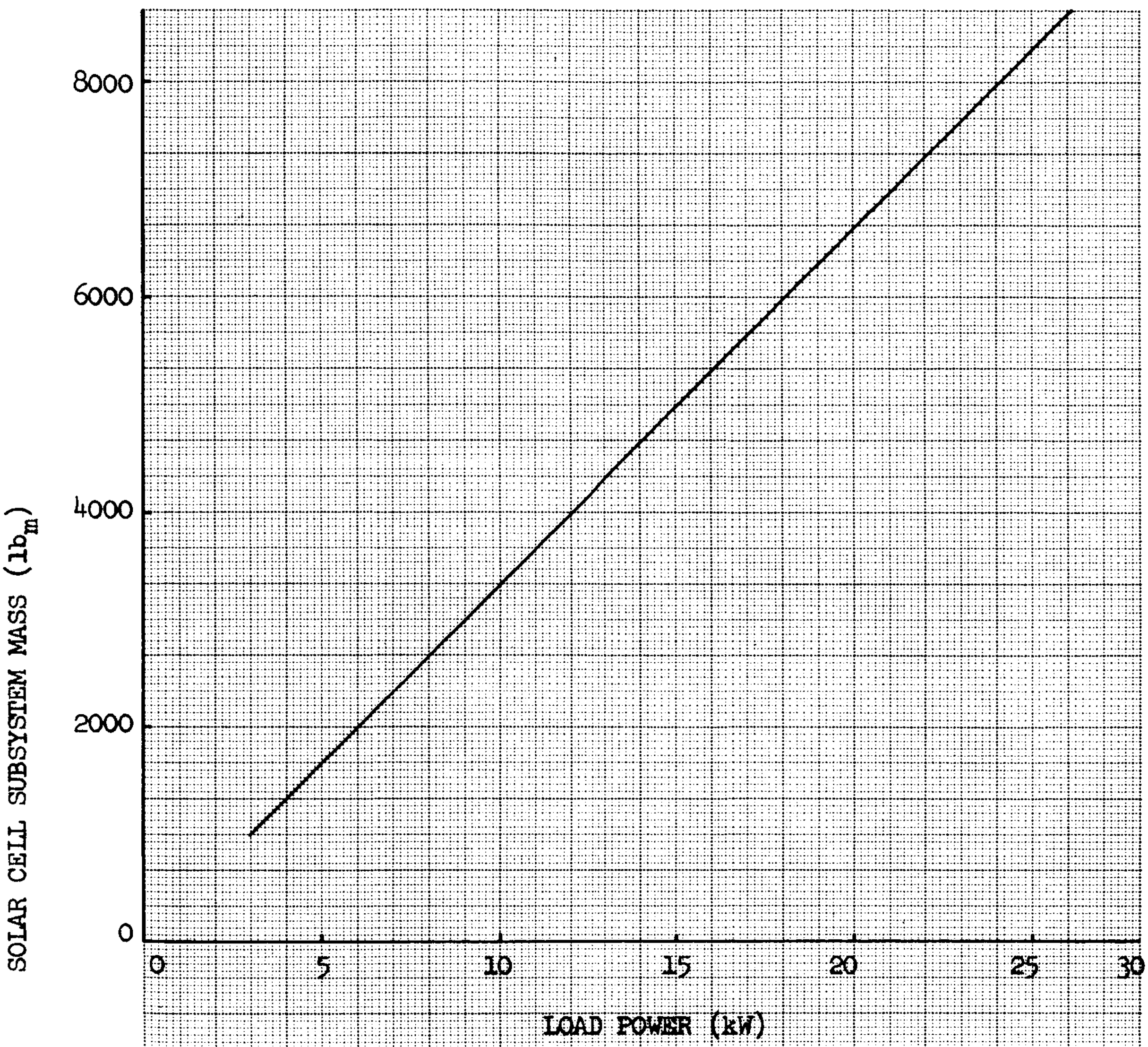

SUBSYSTEM WEIGHT INCLUDES:
Solar Cell Array
Power Conditioning
Power Distribution
Batteries and Chargers
SUBSYSTEM MASS DOES NOT INCLUDE.
Deployment System

NOTES:
14% Cells at 65°C
20% Subsystem power loss
30% Array misorientation
0.70 Orbital light fraction
100% Component redundancy for
power conditioning

Figure 5.4-17: SOLAR CELL POWER SYSTEM SCHEMATIC

5.4.2.2.2 Fuel Cell Power System Evaluation. - A concept is presented here for a fuel cell power system, quantitative parametric data is given, and qualitative considerations of the application of fuel cells in the OLF are discussed.

Fuel Cell. - The fuel cell is an electrochemical energy conversion device that is the power generating component of the fuel cell power system. The cell consists of two catalytic electrodes separated by an electrolyte, with a chemical reactant fed to each electrode. Fuel cells using hydrogen (H_2) and oxygen (O_2) yield the lowest mass systems that will be available by 1970. However, the mass of the fuel systems are approximately six times greater than the solar cells and/or radioisotope/Brayton cycle. This indicates that a significant improvement in fuel cell technology must be accomplished before systems of the power desired can become competitive with the two alternates from a mass consideration standpoint. Figure 5.4-18 shows schematically two typical H_2/O_2 fuel cells, one using a solid electrolyte and one using a liquid electrolyte. The products of the chemical reaction of H_2 and O_2 within the fuel cell are electrical energy, heat, and water.

System Description. - As shown in Figure 5.4-19, the complete fuel cell power system consists of elements that perform the following functions:

- Fuel storage and conditioning
- Power generation
- Power conditioning and distribution
- Water removal and storage
- Heat removal and rejection
- System control

Individual fuel cells are assembled in "stacks" with cells connected in series to meet the system voltage requirement. Electrical output will be about 0.85-1.0 volt DC per cell at rated load. The stacks are connected in parallel. Cryogenic subcritical fuel storage is used. The tanks are designed for a boiloff rate approximately equal to the fuel demand, which yields a tankage mass of only about 15 percent of the fuel mass. The fuel conditioning section supplies H_2 and O_2 to the stacks at the proper temperature and pressure. The water removal equipment removes the water from the cell in either liquid or vapor form, depending on the type of cell, and delivers the water in liquid form to the storage tanks.

Some waste heat is radiated and conducted directly from the stacks. Since the stacks operate at essentially constant temperature, the heat removed in this manner is independent of fluctuations in power output, but it only amounts to about 3-5 percent of the waste heat produced at rated load. Most of the waste heat from the cells and the waste heat from the auxiliary equipment is removed by a coolant, such as a water-glycol mixture, which is pumped through the radiator. The coolant may also be used to preheat the fuel.

The power conditioning and distribution equipment provides the required type and quality of power to the loads. A static inverter is used to supply AC power. The system control section ties all of the system elements together so that the system can operate properly during fluctuations of electrical load, fuel supply temperature and pressure, water utilization rate, and heat sink temperature.

The fuel cell power system may be integrated with the environmental control system (ECS) to remove heat, as indicated in Figure 5.4-19, or it could maintain low

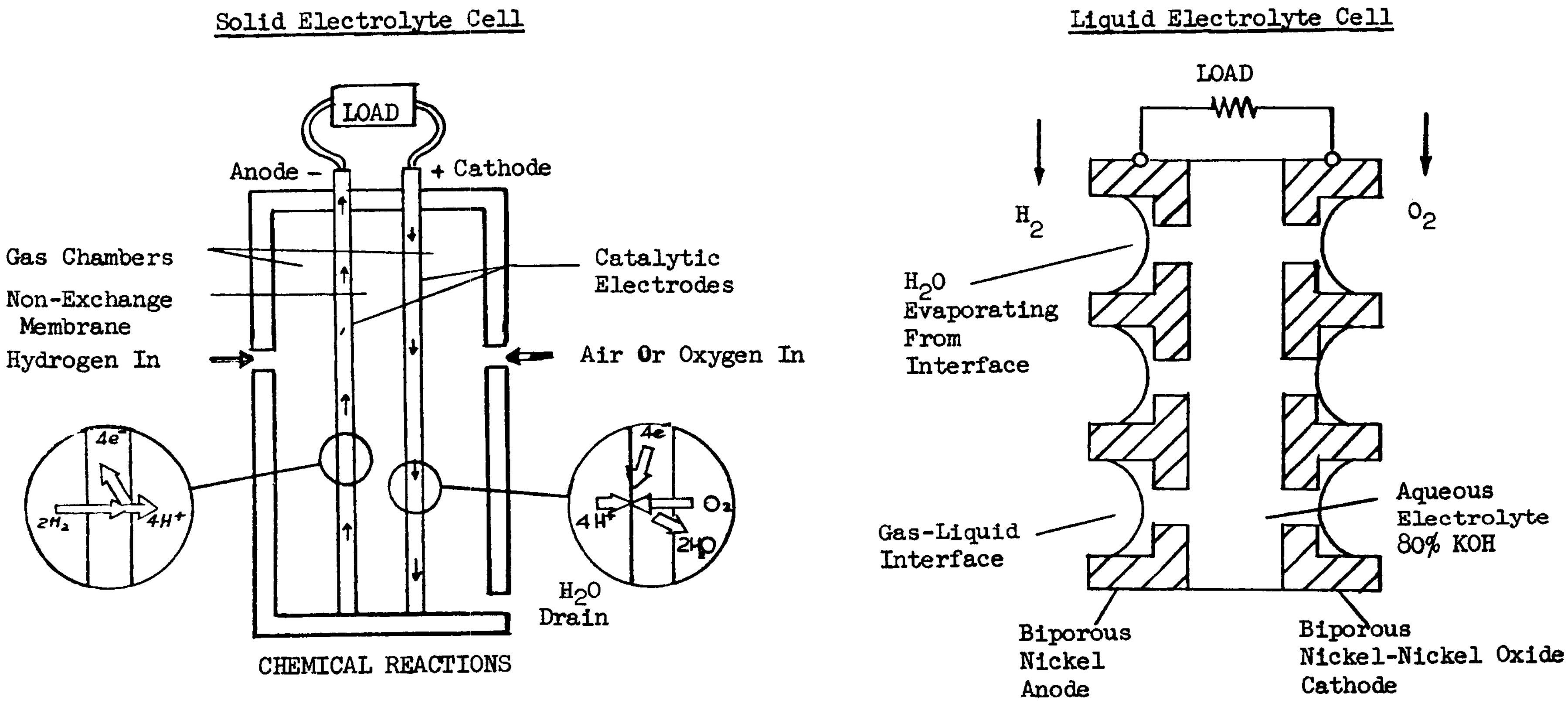
Solid Electrolyte Cell

Liquid Electrolyte Cell

CHEMICAL REACTIONS

Anode
$2H_2 \rightarrow 4H^+ + 4e^-$

Overall
$2H_2 + O_2 \rightarrow 2H_2O$

Cathode
$4e^- + 4H^+ + O_2 \rightarrow 2H_2O$

Figure 5.4-18: FUEL CELL SCHEMATIC

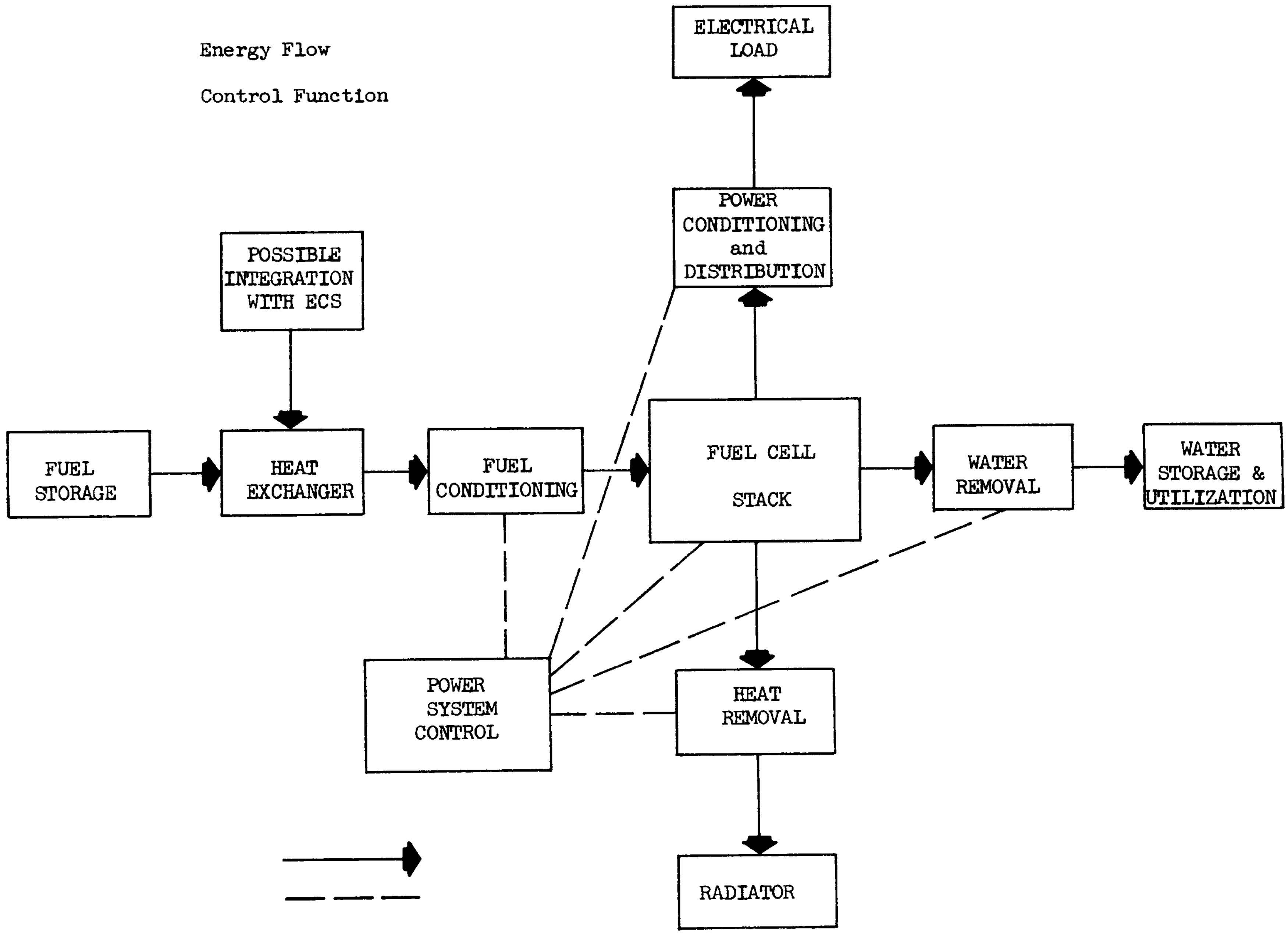

Figure 5.4-19: TYPICAL FUEL CELL SCHEMATIC

temperature in some specialized equipment. It could also supply heat to the ECS from the fuel cell coolant loop.

Parametric Data. - Parametric data for a typical fuel cell power system is given in the following figures. Figure 5.4-20 indicates which qualitative parameters have been evaluated. In order to optimize the system, the system efficiency is increased as the mission duration increases, because for the longer missions the fuel mass becomes the dominant portion of the total system mass. This increase in efficiency causes the radiator area to decrease. The optimization of total system mass produces the unusual shape of both the fuel cell and radiator curve in Figure 5.4-21 and the 30-day refueling interval curve in Figure 5.4-22. Figure 5.4-23 shows the fuel cell system launch mass versus electrical power.

Water Utilization. - The water produced will be removed from the fuel cell at a temperature of 66-82°C (150-180°F), and it may have to be cooled to prevent algae growth in the storage tanks. This water is potable and can be utilized on both the OLF and the OLV in a number of ways, including the following:

- Drinking, food reconstitution, and personal hygiene
- Nuclear or solar radiation shielding
- Cooling in ECS
- Attitude control propellant
- Dynamic balancing and CG control

When comparing the fuel cell power system with other power systems, credit should be given for the mass reduction effected in the OLF and OLV by utilization of the water produced by the fuel cells shown in Figure 5.4-24.

5.4.2.2.3 Isotope/Brayton Cycle Power Conversion System Evaluation. - The isotope/Brayton cycle system currently being developed for MORL has sufficient power generating capability to meet OLF requirements. As indicated later in the discussion, the OLF uses essentially the same power system as the MORL, but the location of the installation has been changed, which has allowed modifications in the shielding configuration to be accomplished. The MORL power system consists of a PU-238 heat source and a Brayton cycle power conversion cycle designed to produce 11 kW_e at the alternator terminals. The isotope is contained within a fuel block that radiates heat to a surrounding heat exchanger of the Brayton cycle gas loop.

A functional schematic diagram of the system is shown in Figure 5.4-25. Although not shown on the diagram, two 5.5 kW_e alternators provide power in parallel. Each rotating unit consists of a single stage centrifugal compressor driven by a single stage, radial inflow turbine. The gas (Argon) enters the centrifugal compressor and is compressed to the selected pressure. The compressed gas then flows through a recuperator, where it absorbs waste heat from the turbine exhaust. After leaving the recuperator, the Argon gas enters the heat source heat exchanger where isotope heat is transferred into the system by radiation. The gas then expands through a radial turbine and is exhausted to the recuperator where waste heat is transferred to the compressor outlet gas. After leaving the recuperator, the gas enters an EC/LS heat exchanger where heat is given up for life support processes. The gas is further cooled by a space radiator and completes the cycle by reentering the compressor.

FIGURE 5.4-20 FUEL CELL SYSTEM QUALITATIVE PARAMETERS

Reliability	Average	Mass-optimized system for operating times above 2 weeks results in fuel-cell operation at low power densities to effect greater fuel economy. This provides a high overload capability as well as redundancy. The system can operate satisfactorily, although at a higher specific fuel consumption, with some of the fuel cell stacks inoperative. The fuel cell is a reliable static power source, but the requirement for a relatively complex system for fuel conditioning, cell temperature control, purging, and water removal result in average system reliability.
Safety	Superior	There is always the possibility of an explosive mixture of the reactants, but this is considered unlikely.
Installation Labor	Superior	System installed on Earth.
Maintenance Labor	Average	Some maintenance may be required on fuel supply and control system.
Operating Labor	Good	Startup will be automatic. No periodic monitoring will be required. Some manual purging may be required.
Space Factor		Estimated space factors based on GE system: Fuel Cell Modules - 0.06 m^3/kW H_2/O_2 Reactants - 1000 cm^3/kWh
Development & Hardware Costs		Development (including qualification, reliability, and quality assurance) about $3 million. Hardware for weight-optimized system about $72,000/kW. These estimates exclude fuel and radiator costs.
Growth Potential	Average	Growth is essentially modular.
Power Quality	Superior	
Availability	Good	Under intensive development at present. Will be used on Apollo (Pratt & Whitney) and Gemini (GE). There are also plans for orbiting a 50-watt Allis-Chalmers fuel cell in the future.

(Continued)

FIGURE 5.4-20 FUEL CELL SYSTEM QUALITATIVE PARAMETERS (continued)

Active & Storage Life	Average	Storage of the fuel cell is no problem, but if fuel storage is required the fuel must be cryogenically stored, resulting in heavily insulated tanks and fuel loss due to boiloff. Fuel cell active life at present is about 1000 hours, but this number is expected to be 10,000 hours by 1970.
Byproduct Credit	Superior	Produces potable water, equal in mass to fuel consumption, which can be used for cooling, drinking, personal hygiene, etc.
Efficiency	Superior	50 to 60 percent. High efficiency results in low specific fuel consumptions, which minimizes fuel and tank requirements compared to other chemically-fueled systems.

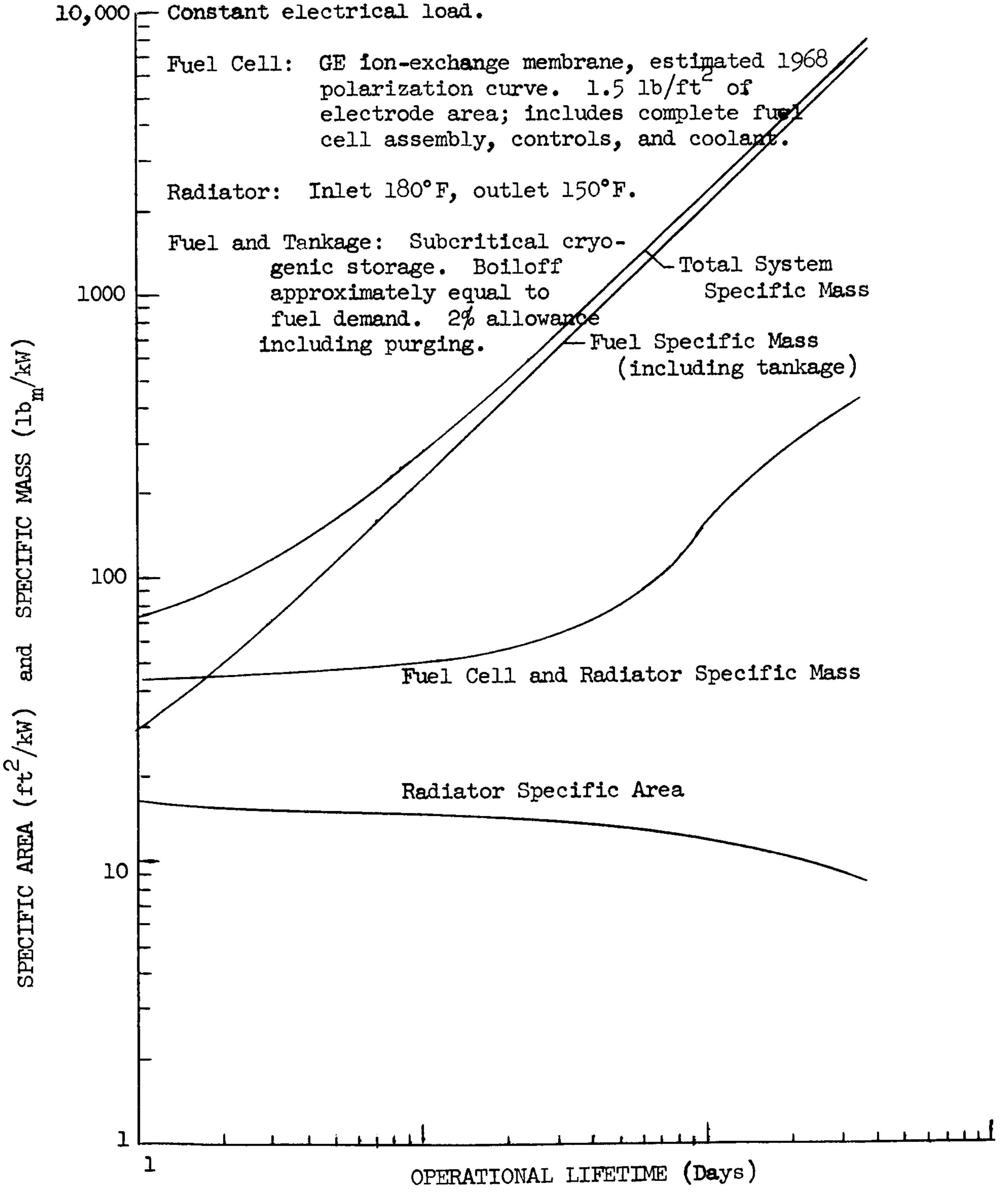

No Redundancy.

Does not include power conditioning, conversion, or distribution.

Constant electrical load.

Fuel Cell: GE ion-exchange membrane, estimated 1968 polarization curve. 1.5 lb/ft^2 of electrode area; includes complete fuel cell assembly, controls, and coolant.

Radiator: Inlet 180°F, outlet 150°F.

Fuel and Tankage: Subcritical cryogenic storage. Boiloff approximately equal to fuel demand. 2% allowance including purging.

Figure 5.4-21: FUEL CELL POWER SYSTEM PARAMETERS

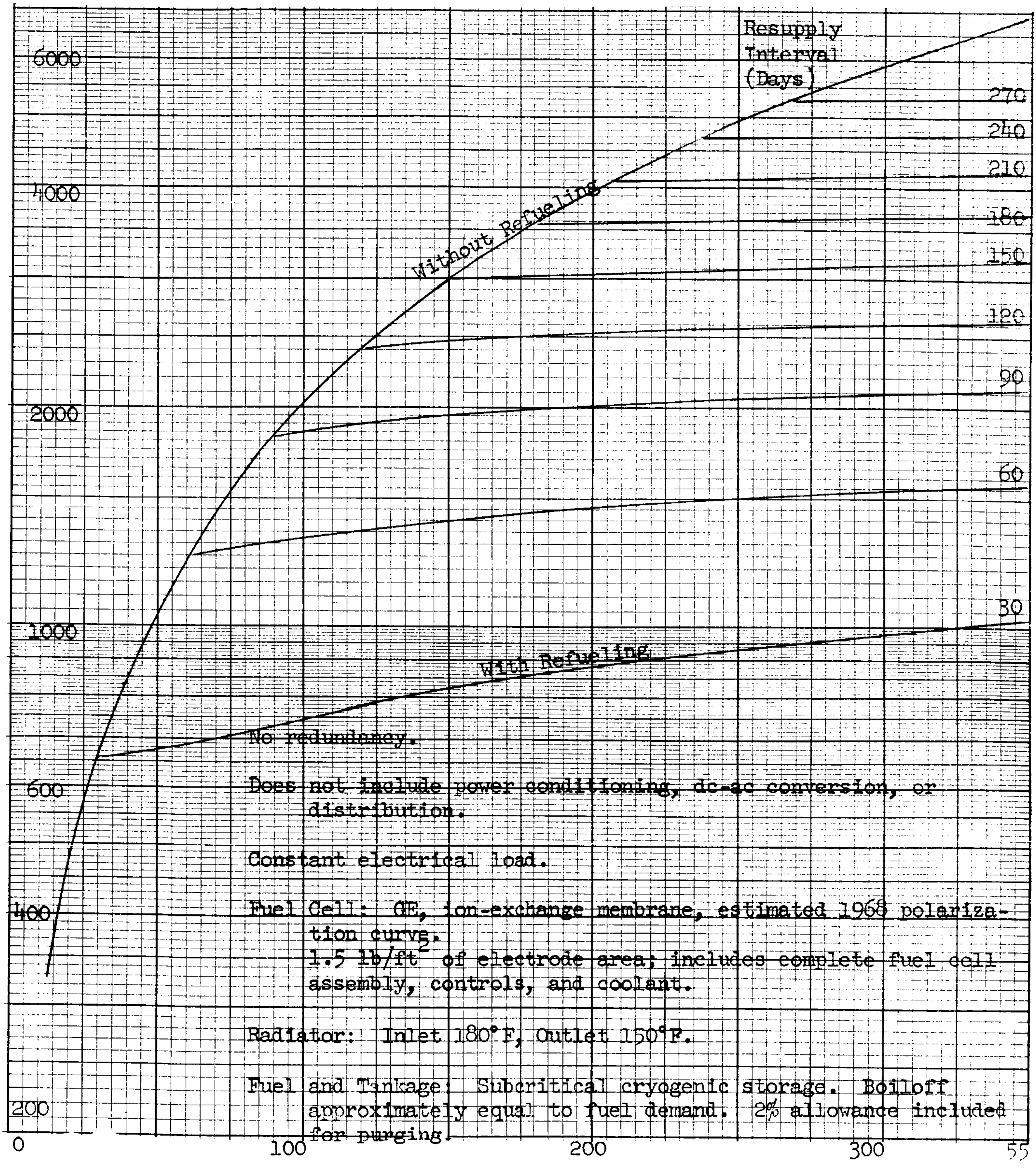

No redundancy.

Does not include power conditioning, dc-ac conversion, or distribution.

Constant electrical load.

Fuel Cell: GE, ion-exchange membrane, estimated 1968 polarization curve.
1.5 lb/ft^2 of electrode area; includes complete fuel cell assembly, controls, and coolant.

Radiator: Inlet 180°F, Outlet 150°F.

Fuel and Tankage: Subcritical cryogenic storage. Boiloff approximately equal to fuel demand. 2% allowance included for purging.

Figure 5.4-22: RESUPPLY INTERVAL VS LAUNCH MASS OF FUEL CELL

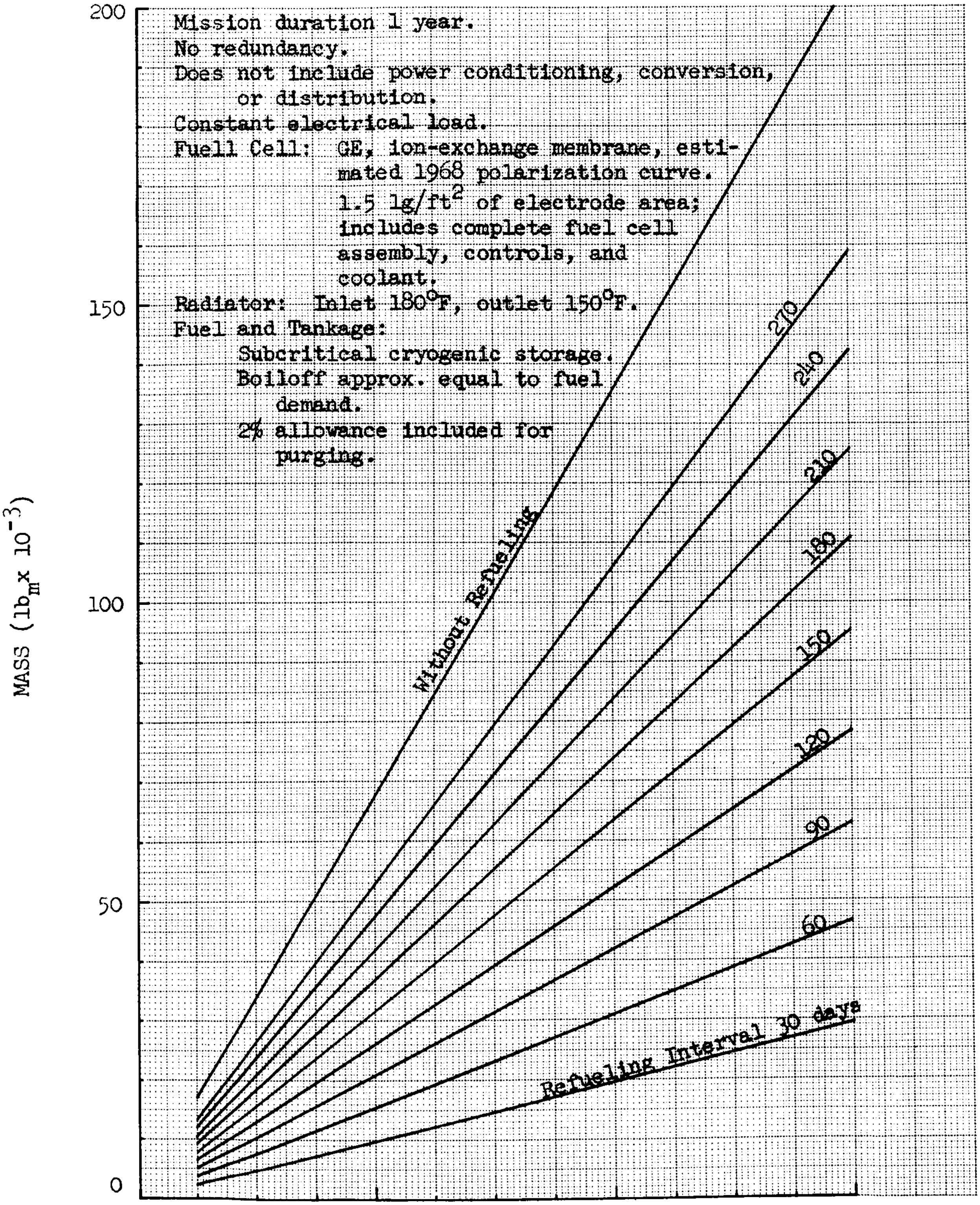

Mission duration 1 year.
No redundancy.
Does not include power conditioning, conversion, or distribution.
Constant electrical load.
Fuell Cell: GE, ion-exchange membrane, estimated 1968 polarization curve. 1.5 lg/ft^2 of electrode area; includes complete fuel cell assembly, controls, and coolant.
Radiator: Inlet 180°F, outlet 150°F.
Fuel and Tankage:
  Subcritical cryogenic storage.
  Boiloff approx. equal to fuel demand.
  2% allowance included for purging.

Figure 5.4-23: FUEL CELL LAUNCH MASS

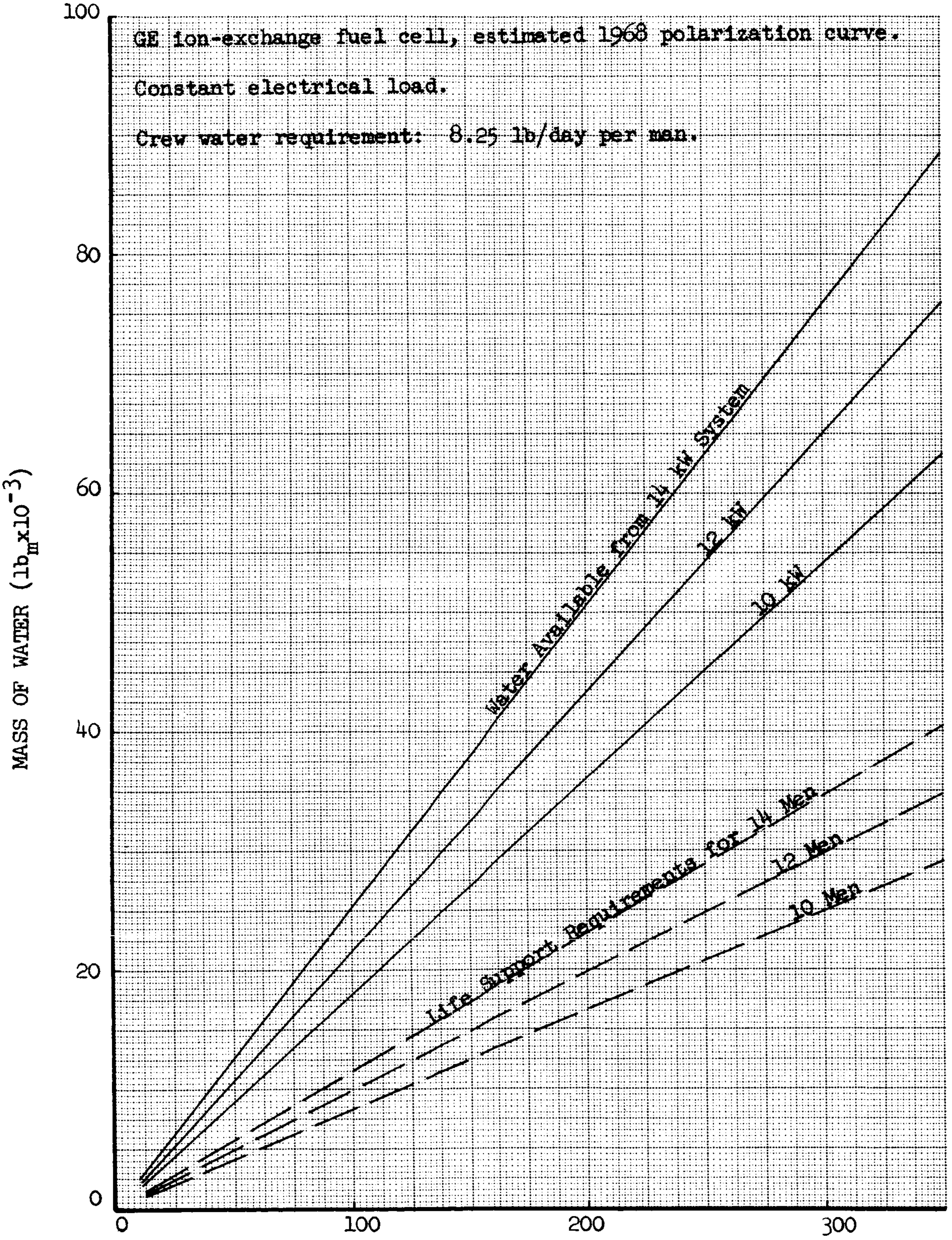

Figure 5.4-24: FUEL CELL WATER CREDIT

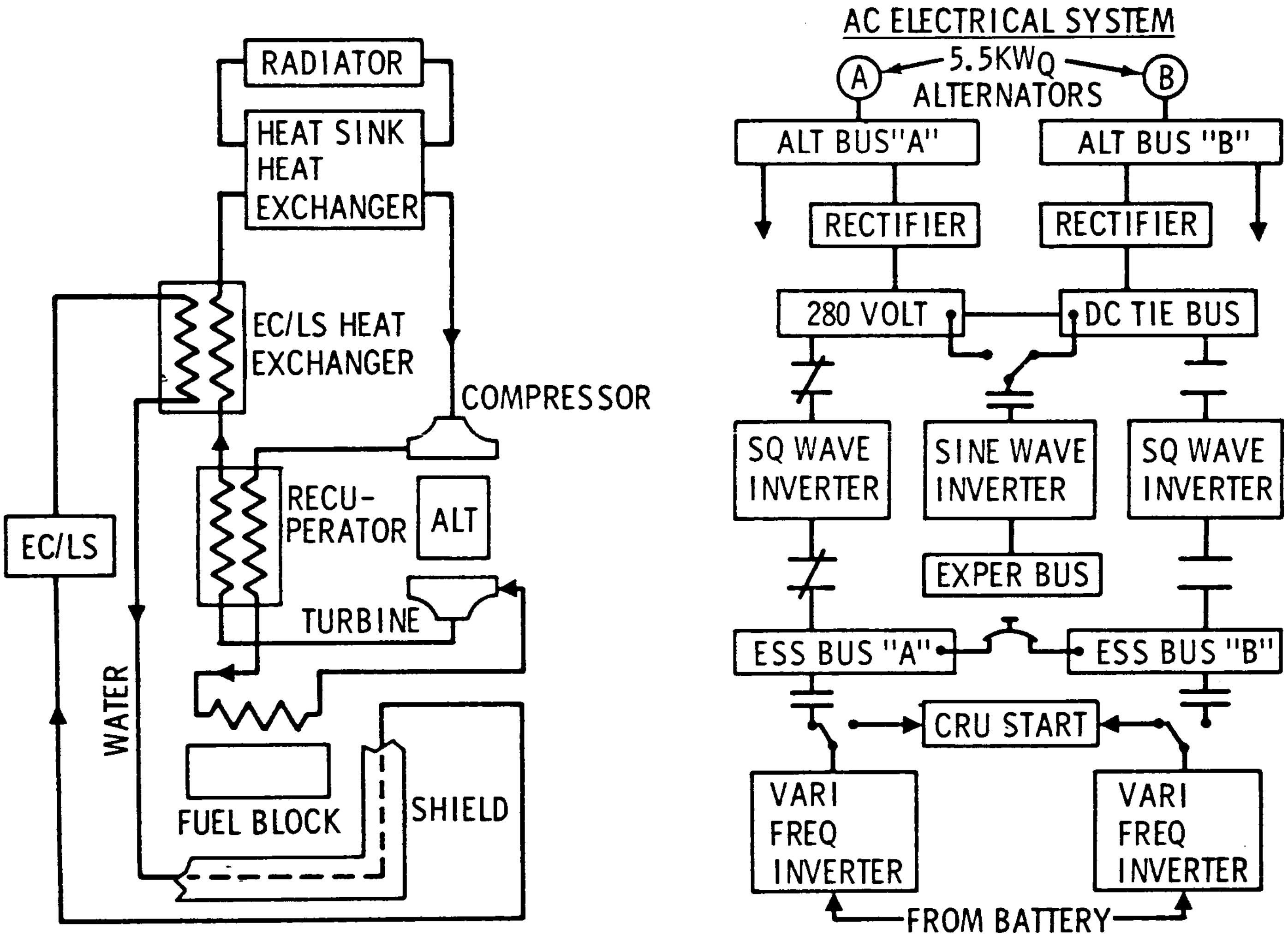

Figure 5.4-25: ISOTOPE-BRAYTON CYCLE POWER SYSTEM

In the event more heat is required by the EC/LS systems, heat can be obtained directly from the isotope heat source.

Further detailed MORL isotope/Brayton cycle system descriptions are contained in References 13 , 14 , and 15.

5.4.2.2.4 Power System Comparison. - Figure 5.4-26 is a general comparison of the candidate power systems. Clearly the fuel cell has a distinct weight disadvantage and, for this reason, has been eliminated as a possible source for prime electrical power on board the OLF.

Solar Cell Panel/Isotope-Brayton Cycle Comparison. - The operational mode load profile shown in the midterm study report was modified to incorporate the added requirement of oxygen regeneration for both the solar-cell/battery and isotope/Brayton power systems. Figure 5.4-27 is a plot of these load profiles.

A comparison study was conducted to evaluate solar-cell/Battery and isotope/Brayton power subsystems that would be amenable to the OLF configuration. Primary emphasis was placed on obtaining a weight comparison between the two systems. Figure 5.4-28 is a plot of electrical power system weight versus operating time in years. Included in this figure is a curve showing solar-cell/battery subsystem weight, including the weight penalty for control moment gyros and reaction control propellant. A fixed weight of 2050 pounds was allowed for control moment gyros and an annual propellant consumption rate of 1285 lbs was used for orbit keeping and attitude control, based on a solar cell panel area of 4080 square feet.

An average power level of 22.8 kW at the solar panel during the sun-side period was used for sizing of solar panel area. Using 9.42 watts/ft^2, based on 1975 efficiency predictions, this value was downgraded 10 percent per year because of cell deterioration. For a five-year time period, the panel must initially provide 38.5 kW of raw power.

Isotope/Brayton cycle information presently available from MORL studies, was readily adaptable to the weight trade conducted because the power level used in the MORL study was 11 kW. This power level is equivalent to that shown in Figure 5.4-27 for an OLF isotope/Brayton cycle load requirement. Component weights were used as is and the primary weight adjustment for this system was due to relocation of the isotope heat source and the addition of 1665 pounds for OLF electrical distribution system wire, connectors, etc.

For the same shield thickness used in MORL, relocation of the isotope from MORL to the OLF hub reduces the dose rate at the base of the crew quarters by 14 times. Hence, for the same dose rates as before, the shield thickness can be reduced by almost 50 percent. A full shield would weigh approximately 1200 pounds. A minimum shield weight of 800 pounds is possible with the use of scatter shields for docking protection.

In addition, the solar cell/battery system without isotope heat addition must provide 5382 watts additional electrical power for oxygen regeneration. Brayton cycle added power requirements amount to 3525 watts. Differences in power levels exist between the two systems because Brayton cycle waste heat and isotope heat can be used directly for zeolite and silica gel bed rejuvenation.

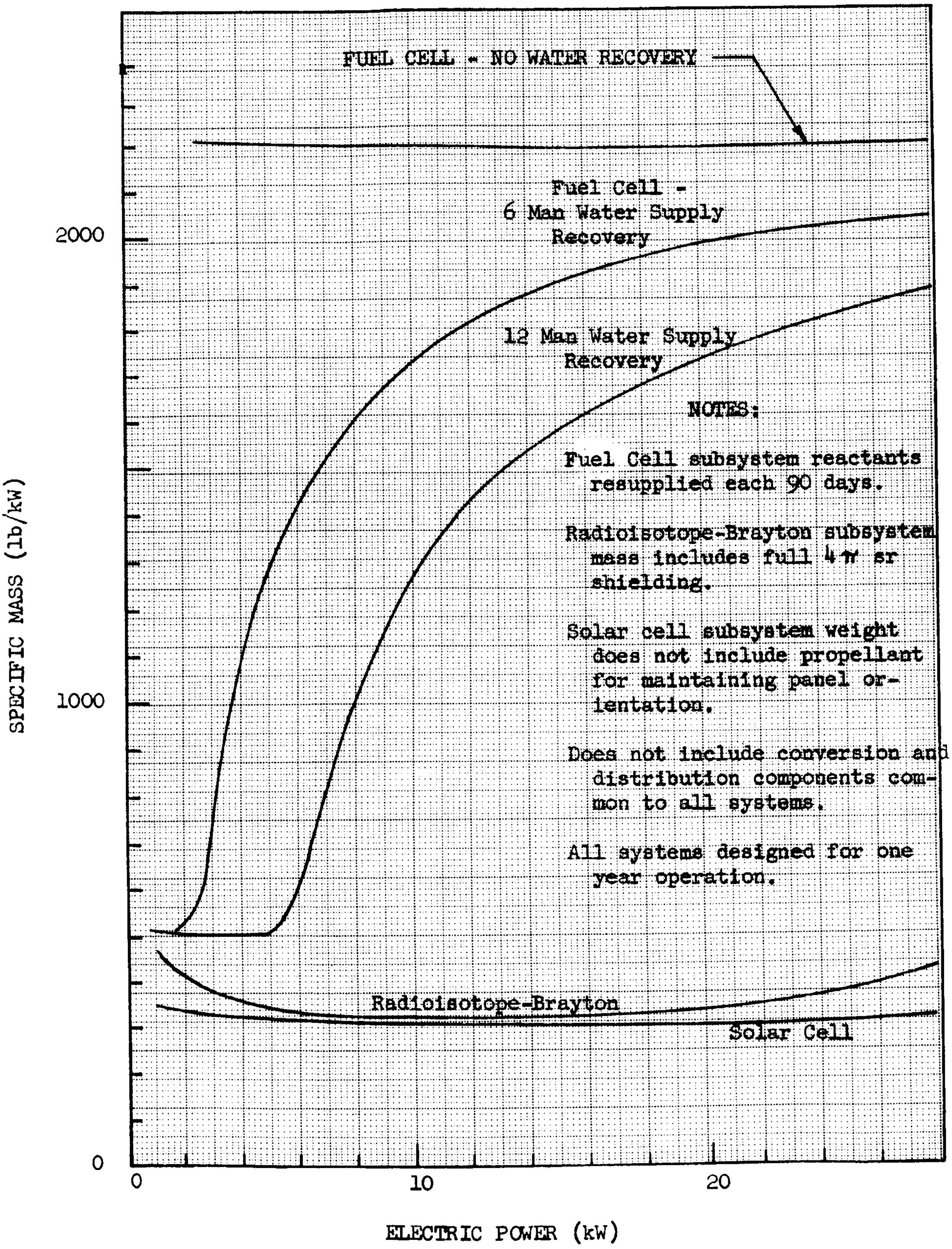

NOTES:

Fuel Cell subsystem reactants resupplied each 90 days.

Radioisotope-Brayton subsystem mass includes full 4π sr shielding.

Solar cell subsystem weight does not include propellant for maintaining panel orientation.

Does not include conversion and distribution components common to all systems.

All systems designed for one year operation.

Figure 5.4-26: GENERAL COMPARISON OF CANDIDATE POWER SUBSYSTEMS

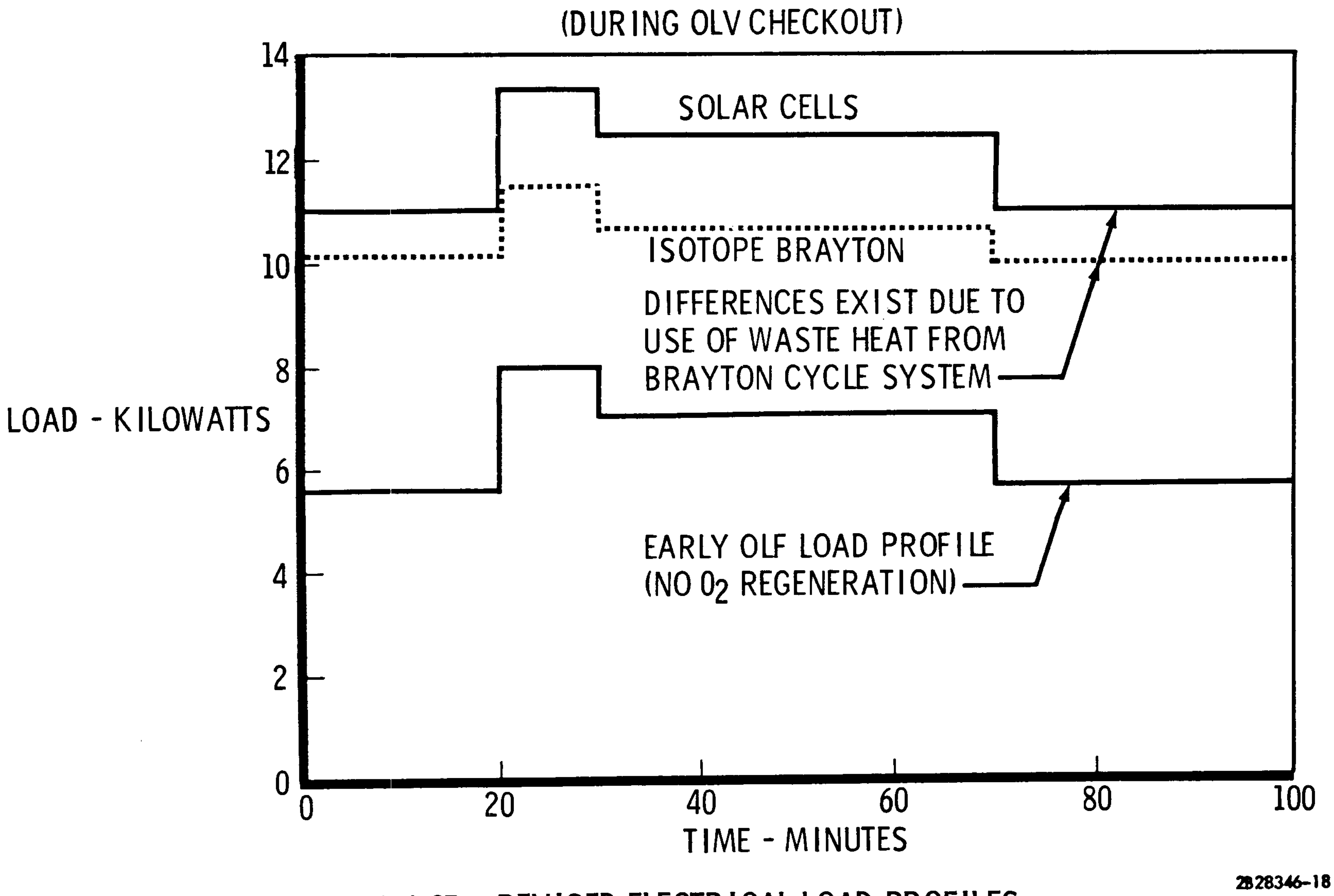

Figure 5.4-27: REVISED ELECTRICAL LOAD PROFILES

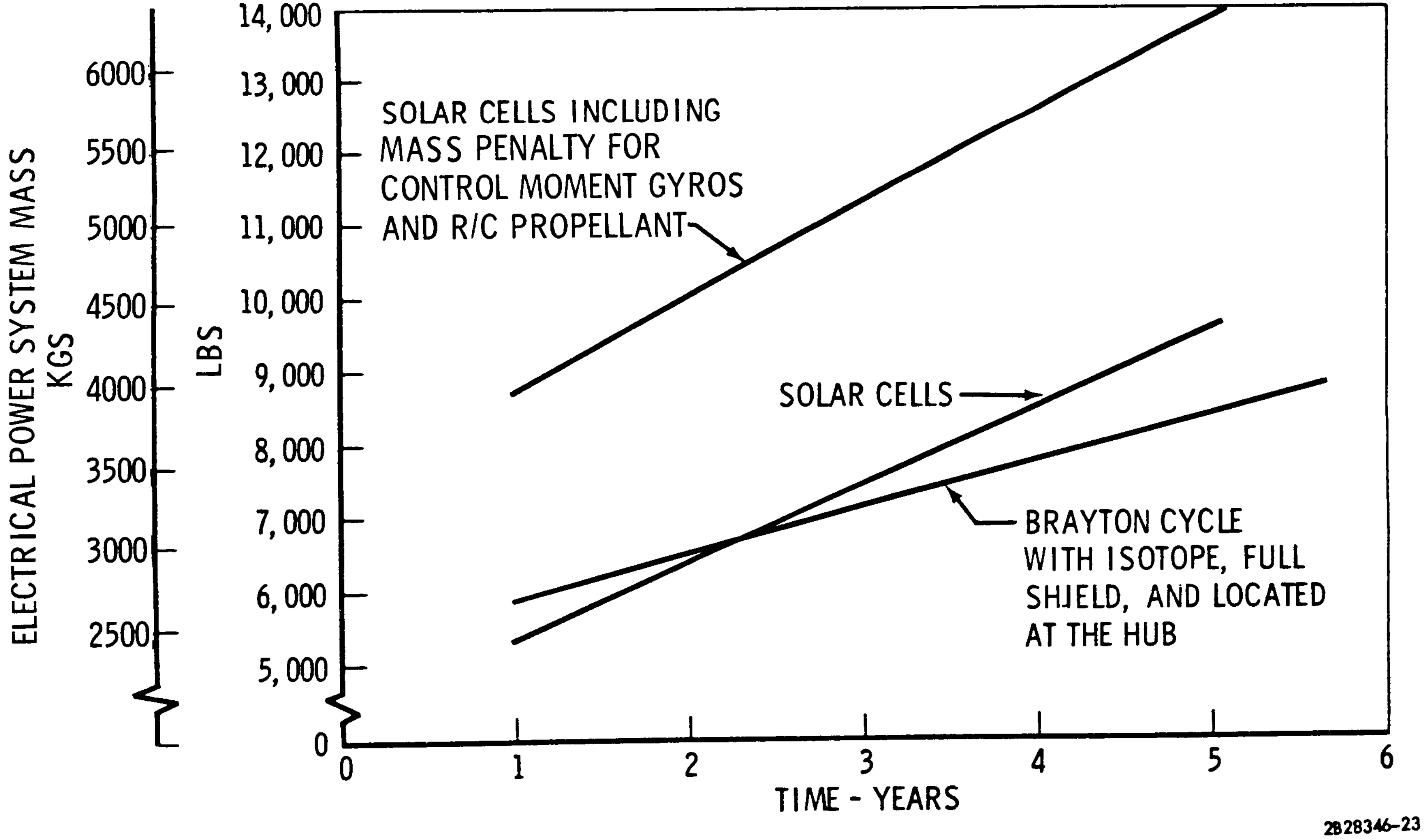

Figure 5.4-28: ELECTRICAL POWER SYSTEM MASS VS TIME

Aside from the operational mode load profile, energy amounting to 145 kW-hrs is required by the OLF during launch, orbital assembly, and checkout periods. This requirement presents a problem for the solar-cell/battery system because the batteries are only capable of putting out 7.6 kW-hr without recharging. The Brayton cycle is not affected by this requirement because this type of power system operates during all phases of the vehicle mission.

A summary of the parameters evaluated in this study are shown in Figure 5.4-29.

FIGURE 5.4-29 POWER SYSTEM COMPARISON

	Solar-Cell/Battery	Radioisotope/Brayton Cycle
Power System Mass①	2082 kg	2286 kg
Attitude Control Penalty②	1513 kg	0
Five-Year Total Mass③	5926 kg	3433 kg
Volume	40 cu ft (Not including solar array	200 cu ft
Development Required	Minor (Complete system present state-of-art)	Major (system in prelim. design phase of develop.)
	Solar Panels . Stable coatings . Structural design . Deployment mechanism	Radioisotope Heat Source . Encapsulation . Handling techniques . Abort techniques, trajectory requirements . Shielding . Heat source heat exchan- . Shut down heat removal . System start-up, shut-down, restart
	Batteries (Silver-cad.) . Cycle life characteristics . Temperature control	Combined rotating unit . Compressor design . Alternator design . Turbine design . Gas bearing

① Includes distribution system and structural supports

② Includes 930 kg mass of control moment gyros

③ Based upon spares replacement of 287 kg/yr for radioisotope power and an average of 475 kg/yr for solar cells, plus 583 kg/yr of attitude control propellant.

continued on next page

FIGURE 5.4-29 POWER SYSTEM COMPARISON (continued)

	Regulation & Control . Size existing types of devices	Regulation & Control . Size existing types of devices . Develop control techniques Radiators . Tube construction . Meteoroid protection . Supporting structures . Configuration (integration into vehicle
Risk	Low-existing hardware available or readily developed from other sizes	High-Preliminary state of development even though some component technology is within state-of-the-art. Anticipated 27% efficiency may be too optimistic
Reliability	Inherently high . No moving parts . Additional redundancy of components is achieved with small incremental weight penalties . Proven in space application . State-of-the-art components	Fair . Moving parts . Additional redundancy achieved with large incremental weight penalties . Not proven in space application . Some component designs are essentially state-of the-art technology
Availability	Good . Solar cell production can meet program schedules . Battery design fabrication & testing can meet program schedules . Regulation conversion and control devices can meet program schedules	Poor PU-238/Brayton cycle not available Radioisotope heat source availability is questionable for this schedule Combined rotating unit - may meet program schedule Radiator - will meet program schedule

continued on next page

FIGURE 5.4-29 POWER SYSTEM COMPARISON (continued)

		System may not be available unless bearing programs are successful
Safety	. No radiation hazard . Docking hazards . Battery malfunctions could release KOH into the atmosphere	Radioisotope heat source . Complete containment or dispersement upon abort during all mission phases and reentry . Biological shielding required during mission and ground handling . Heat removal required during shutdown of system . Redundancy of exposed radiator required.
System Compatability	Requires sun orientation . One year life . No radiation hazards . No major resupply required . Requires large area panels which must be folded during launch	No orientation required . One year life (not demonstrated for large rotating machines in space) . Radiation hazards
Operational Considerations	. Requires deployment mechanism . Large surface area poses storage and physical interference hazards . Cell degradation requires maintenance operations.	. Complex mechanism required for installation of space gas loop . Imposes special safety considerations due to radiation environment.

5.4.2.3 Recommended System. - Several important factors influence the selection of the electrical power system for the OLF. These include the degree of commonality with the MORL electrical power system, anticipated state-of-the-art development of both the Isotope/Brayton cell system and solar panels, the basic power profile requirements including the use of oxygen regeneration, crew safety, and power availability for OLF growth potential.

Based on these factors, as indicated in the technical studies, the Isotope/

Brayton cycle system is recommended for the OLF. One of the over-riding considerations recognized in this selection was the basic assumption that the MORL system would utilize this concept; therefore the subsystem development period would be compatible with the OLF mission schedule. The basic characteristics of the recommended electrical power system are described in the next paragraph.

The electrical power on board the OLF is supplied by two Isotope/Brayton cycle alternators, each rated at 5.5 KWe (7.0 KWe continuous overload). The output of these alternators provide power at 120/208V, 3Ø, 1067CPS AC; of which 54% is rectified to 28.V DC for the DC subsystem and the remaining 46% is rectified to 280V DC then converted to 115/200V, 3Ø, 400 CPS AC for the AC subsystem. The DC subsystem rectifiers operate at 89.4% efficiency providing 5.31 KWe (6.76 KWe continuous overload) at the DC busses. The rectifiers and converters of the AC subsystem operate at a combined efficiency of 80.7%, providing 4.08 KWe (5.20 KWe continuous overload) at the AC busses. The normal OLF power requirements consume 5.23 KWe DC and 3.85 KWe AC, resulting in 80 watts DC and 230 watts AC available for experimental power. During the initial checkout of the OLF after orbit injection; during OLV, LOX tanker, and S-II checkouts; during logistic vehicle de-orbit countdown; and during Orbital Launch Vehicle countdown; the OLF power requirements increase to 6.03 KWe DC and 4.45 KWe AC. These checkouts account for seven 50-minute periods every 90 days after the OLF is placed in orbit. The pumping down of either the experimental bay or hangar bay requires 2 KWE of AC power for a six-hour period. While this pumping will not be performed during OLV checkout operations, the required timing of the pumping operation can not be scheduled, but is expected to average one operation per week of OLF life. The remaining power requirement for the OLF is earth communication, which occurs once per orbit and requires 1.35 KWe DC additional during normal operations or .85 KWe DC additional during OLV checkout operations. These resulting power requirements exceed the rated loads of the system for all except normal operations, and also exceed the continuous overload capability of the system when hangar pumpdown or earth communications during OLV checkout operations is required.

5 4.3 Guidance & Navigation

5.4.3.1 Requirements. - Guidance and navigation subsystem requirements for the OLF are very similar to those required for the MORL vehicle. Specifically, the following functional requirements must be implemented:

1. Provision must be made for orbit determination and correction capabilities using the ground network for tracking and orbital computations.

2. For modes requiring precise attitude hold, such as docking, experiments, and OLV launching, periodic correction of the inertial rate integrating gyros is necessary due to their random drift rates.

3. A back-up mode of control is required during rendezvous operations.

4. Autonomous navigation capabilities are required for primary back-up to meet crew safety requirements and to support the OLV launch window computations.

5.4 3.2 Technical studies. - Two basic operating modes of the OLF have been evaluated to determine the guidance and navigation subsystem characteristics. These are for a zero-g and an artificial-g mode of operation.

Zero-g (non-rotating). - Ground tracking stations interrogate the MORL tracking aid subsystem transponders. R.F. signals returned to the ground station are routed to a central computer where the OLF's orbital parameters are computed. At periodic intervals, these parameters are transmitted to the MORL digital command subsystem and from there to a display for manual orbit correction. The digital command subsystem can also automatically correct the orbit by sending a signal to the orbit keeping thrusters.

There are six inertial rate integrating gyros on MORL. All six have the option of being used as accurate rate gyros by closing the loop between gyro output and torque input. In the zero-g mode, three are used as rate gyros and three as rate integrating gyros for stabilizing rate and commanding attitude.

Attitude sensors include sun sensors and star trackers. Pitch or yaw about the Z or X-axes respectively, bring the Y-axis to the sun line, from which roll can be initiated for stellar acquisition. Coarse and fine sensors are used for the solar and stellar units. Acquisition is with cause sensors and null holding by fine sensor control. Simultaneous acquisition by two or more sensors is required before switching to the fine sensors.

For modes requiring precise attitude hold, periodic correction of the inertial rate integrating gyros (IRIG) is necessary since they have a random drift rate. This can be done in two ways:

1. About 60 seconds prior to a specified update point, the X and Y axes are controlled by the sun sensors and the Z axis by the star trackers. Simultaneously, the IRIG's are switched to a rate mode and track the sensor position commands. Ideally, the sensor inputs will go to null at the update point and rates about the vehicle axes will be essentially zero. At this time, the IRIG's switch back to the integrating mode.

2. An Apollo inertial measuring unit (IMU) provides an accurate attitude reference in the zero-g mode. The respective IRIG and minus IMU outputs (scaled the same) are summed, and the error signal is used to drive the IRIG's to the corrected output.

Rendezvous will be accomplished in the zero-g mode. Primary guidance and navigation will be provided by the rendezvousing spacecraft, with the OLF acting passively. In case of G&N system failure in the rendezvous vehicle, a MORL backup system is available in the form of the Apollo IMU, Saturn V digital computer, and a MORL rendezvous radar. The IMU provides vehicle attitude signals necessary to transform radar measurements into the primary navigation coordinates. The rendezvous astronaut will maneuver in response to commands from the OLF control console operators.

A voice link giving orbit corrections from ground to MORL communications subsystems can be used as an emergency backup to ground tracking navigation, with the astronaut manually correcting the orbit in this case.

An autonomous navigation backup system consists of the Apollo IMU for attitude reference, an Apollo sextant and scanning telescope, and the horizon scanner feeding the Saturn V digital computer. The computer computes the orbit parameters for display. Manual operation of the orbit keeping thrusters then corrects the orbit.

Artificial-g Mode (rotating). - Two rate gyros are used in this mode to sense X and Y rates and to send error signals to CMG's for wobble damping. The third rate gyro senses spin rate about the Z axis. Since the rates encountered during spin will be much higher than those during zero-g mode, the high precision IRIG's are not acceptable and an additional set of rate gyros is necessary. These are also a part of existing MORL equipment.

Orbit upkeep can be accomplished by ground transmittal or voice link, as described in Mode A above. However, while spinning the orbit keeping thrusters must be applied at the correct point in orbit. When the sun is directly overhead, the horizon scanner will register a null, and the longitudinal plane of the vehicle will be parallel to the orbit path velocity vector. Velocity change is applied when the reaction jet thrust vector rotates within 180° of a specified angle (for expample, 30°) of the orbital path velocity vector. Thrust must again be applied 180° later. Since the sun will not be behind the earth, a clock can be used to determine the proper thrusting point.

5.4.3.3 Recommended System. - A block diagram of the OLF Guidance and Navigation subsystem is shown in Figure 5.4-30. Figures 5.4-31 thru 5.4-34 are a matrix of data showing the basic equipment items within the guidance and navigation subsystem and the requirements for displays and checkout time during discrete modes of subsystem operation. Figure 5.4-35 lists the items of equipments, quantity, size, weight, and power for the subsystem.

This guidance and navigation system concept reflects the maximum use of existing MORL hardware. However, the unique OLF requirements dictate an autonomous guidance capability which requires the addition of the Apollo inertial measurement unit, sextant, and scanning telescope.

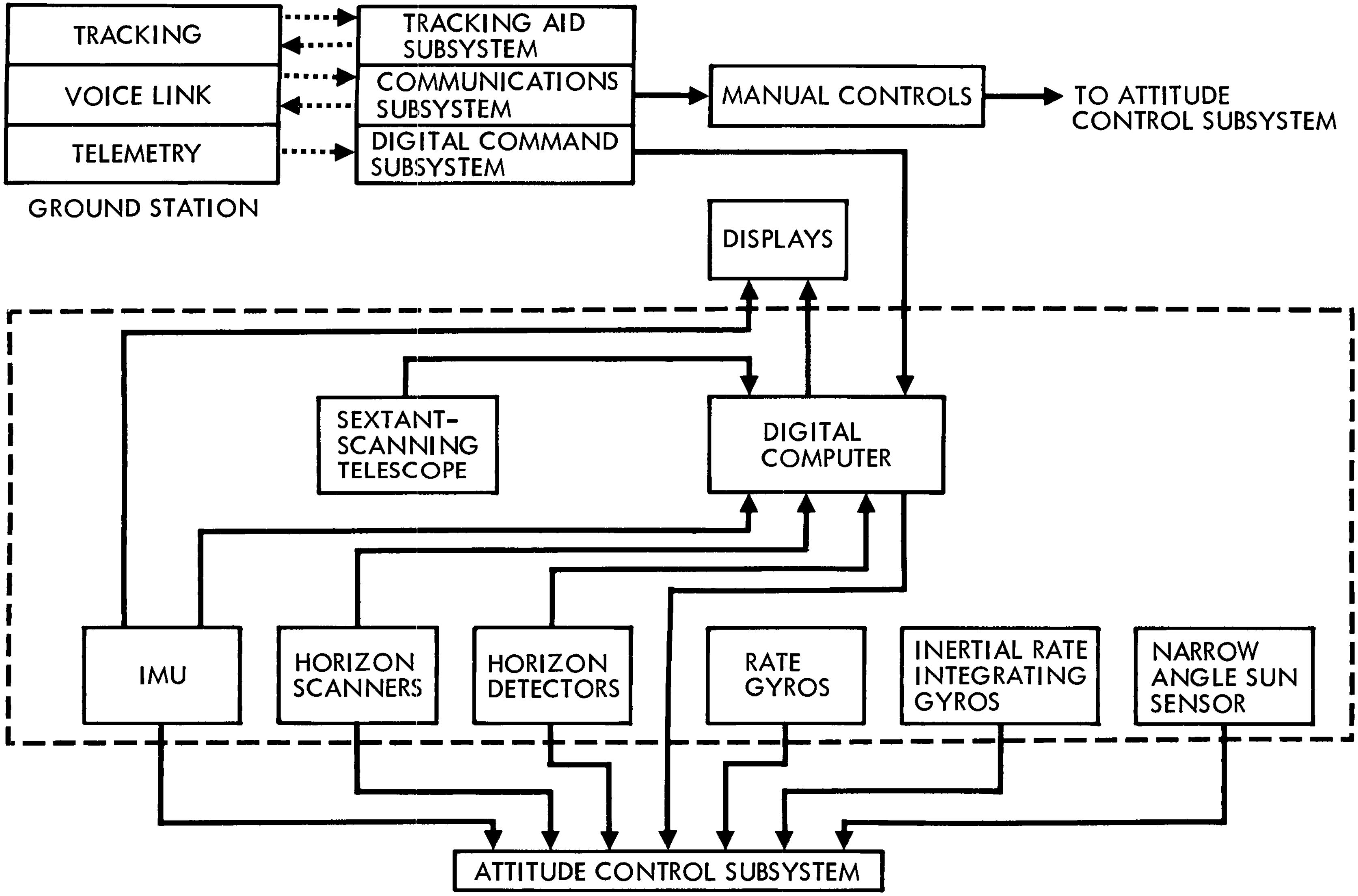

Figure 5.4-30: GUIDANCE AND NAVIGATION SUBSYSTEM SCHEMATIC

FIGURE 5.4-31

CHECKOUT AND ACTIVATION MODE

Item	Displays Required	Checkout Time
Inertial Rate Integrating Gyros (IRIG)	Lights; signal output meter for calibration	Visual Scan
Rate Gyros	Lights	Visual Scan
IMU	Pitch, Yaw, and Roll Lights IMU Ready Light	5 Min.
Sextant and Scanning Telescope	Signal Output Meter	5 Min.
Horizon Scanners	Signal Output Meter	15 Min.
Sun Sensors	Signal Output Meter	5 Min.
Digital Computer	Computer "Test and Checkout" displays of Figure 4-13 p. 88 Douglas Report SM-46086	15 Min.

FIGURE 5.4-32

OPERATING MODE

Item	a) Displays Required	b) Inspec. Freq.	c) Operation Checkout Time
Inertial Rate Integrating Gyros (IRIG)	Lights Calibration Meter	1 hr. Once per orbit	Visual Scan 15 Min.
Rate Gyros	Lights	1 hr.	Visual Scan
IMU	Pitch, Yaw Roll Lights Attitude display ball indicator	3 hrs.	Visual Scan
Sextant and Scanning Telescope	Lights	Once, while in use	Visual Scan
Horizon Scanners	Yaw and Roll Lights	Once, while in use	Visual Inspection
Sun Sensors	Pitch and Yaw Lights	Once, while in use	Visual Scan

continued on next page

FIGURE 5.4-32 OPERATING MODE -(continued)

Item	a) Displays Required	b) Inspec. Freq.	Operation c) Checkout Time
Digital Computer	"Computer" display of Figure 4-13 p.88 of Douglas Report SM-46-086	While using manually Otherwise continuous Monitoring of "Malfunction" light	Duration of Use Manually
Orbit Keeping	Orbital Track Ball Indicator	1 hr.	Visual Scan

FIGURE 5.4-33 DEACTIVATION MODES

No special displays or personnel skills are necessary for deactivation. Equipment will deactivate with power shut-off.

FIGURE 5.4-34 SUBSYSTEM FAILURE

a) Type of Failure	b) Repair Tasks	c) Repair Time
IRIG Failure	Replace Gyro	1 hr.
IRIG Electronics Card Failure	Replace Card	1 hr.
Sun Sensor Fail	Replaces Sun Sensor	2 hrs.
Two Identical Modules Failure in Digital Computer	Replace Computer	4 hrs.

FIGURE 5.4-35 GUIDANCE AND NAVIGATION EQUIPMENT

Equipment	No. Required	Size	Weight Each	Excitation	Power
Two Axis Narrow Angle Sun Seeker	2	2" dia., 1.5" long 0 003 ft.^{3}	0.2 lb.	None	None
Two-Axis Horizon Scanner	2	0.19 ft ^{3}	13.0 lb.	28vdc	10w
Inertial Rate Integrating Gyro (IRIG)	6	2.15" dia , 3 5" long 0.007 ft.^{3}	1.0 lb.	26v, 400cps 28 vdc	3 5w 26.5W
IRIG Torque Control Electronics	6	0.035 ft.^{3}	0.5 lb.	28 vdc 26v, 400cps	0.5w 1.0w
Rate Gyro	3	1" dia , 2" long 0.001 ft.^{3}	0.5 lb.	26v, 400cps	3.5w
Single Axis Horizon Detector Head	2	1" dia., 4" long 0.002 ft ^{3}	1.0 lb.	28vdc	3w
Single Axis Horizon Detector Electronics	1	3" x 4" x 5" 0.04 ft.^{3}	1.0 lb.	28vdc	2W
Inertial Measuring	1	1.2 ft.^{3}	57 lb.		195w
Sextant and Scanning Telescope	1	1 ft ^{3}	35 lb.	26v, 400cps	9w
Digital Computer	1	30" x 12.5" x 10.5"	68 lb.	28vdc	200w

5.4.4 Attitude Control and Stabilization. - The OLF stabilization and attitude control requirements place a premium on system versatility. During the Orbital Launch Operations (OLO) period, each of the various vehicles docked in orbit has a large affect upon attitude control of the assemblage. Figure 5.4-36 shows the basic modes or major configuration changes during orbit necessary for a complete OLO mission In addition, the OLF proper (during periods other than OLO) must be capable of providing an artificial gravity by spinning, either continuously or intermittantly. To meet the requirements of these widely differing conditions, the control system and methods used must possess versatility as well as a high degree of reliability

Use of an Isotope/Brayton Cycle electrical power unit eliminates the primary requirement for continuous orientation of the OLF - that of solar panel pointing along the sun line. Random orientation, with attitude control only for maneuvers, docking, or experimental purposes, appears feasible for the OLF. Present indications are that random orientation will allow periods of up to 30 days OLF operation without use of the reaction control system. Although attitude control requirements can be lessened somewhat, certain analysis parameters are more complicated or uncertain due to random orientation.

When continuous orientation is required (as with the early OLF design using solar panels) the vehicle drag and induced torque parameters can be reasonably estimated, since the vehicle attitude with respect to the perturbing forces is known. With orientation required throughout the orbit, control moment gyros (CMG) can effectively be used to remove cylcical torques. Early OLF analysis with solar panel power showed that CMG use for the OLF, in Modes 1 or 10, resulted in lower system weight after about 140 days in orbit, due to propellant savings. The CMG weight, however, increased tremendously with the momentums associated with OLO Modes 2 through 9. Since OLO operations cover only a portion of the OLF lifetime, CMG use was recommended for Modes 1 and 10, but not for Modes 2 through 9. For artificial gravity spinning operation, with orientation, CMG's were proposed for spin axis precessions control. Figure 5.4-37 shows CMG weight vs momentum stored for the axis controlled. Figures 5.4-38 and -39 show general propellant usage trends of the earlier studies (with solar panels and an early OLF design of about 20% less inertia about each axis). The analytical approach was that proposed by Liska and Zimmerman. (Reference 16 Liska, D.J. and Zimmerman, W H., "Effect of Gravity Gradient on Attitude Control of a Space Station", J. of Spacecraft and Rockets, Vol. 2, No 3, May-June 1965, pp. 419-425.)

Random orientation requires a more complete assessment of all disturbance torques to accurately estimate the attitudes during orbit, and thus the drag area and orientation requirements for maneuver thrusts. The major forces causing these torques are:

1. Gravity Gradient - This has, in general, both an oscillating (at twice orbital period) and an accumulating component. It may be reduced to zero only by choosing an inertially symmetric vehicle or an orientation such that the vehicle principal axes coincide with orbit axes. The gravity gradient causes the major torque acting on the OLF in random attitude.

2. Aerodynamic. - Torques from this source may be minimized by choosing a configuration with the center of mass and center of pressure coincident. Drag,

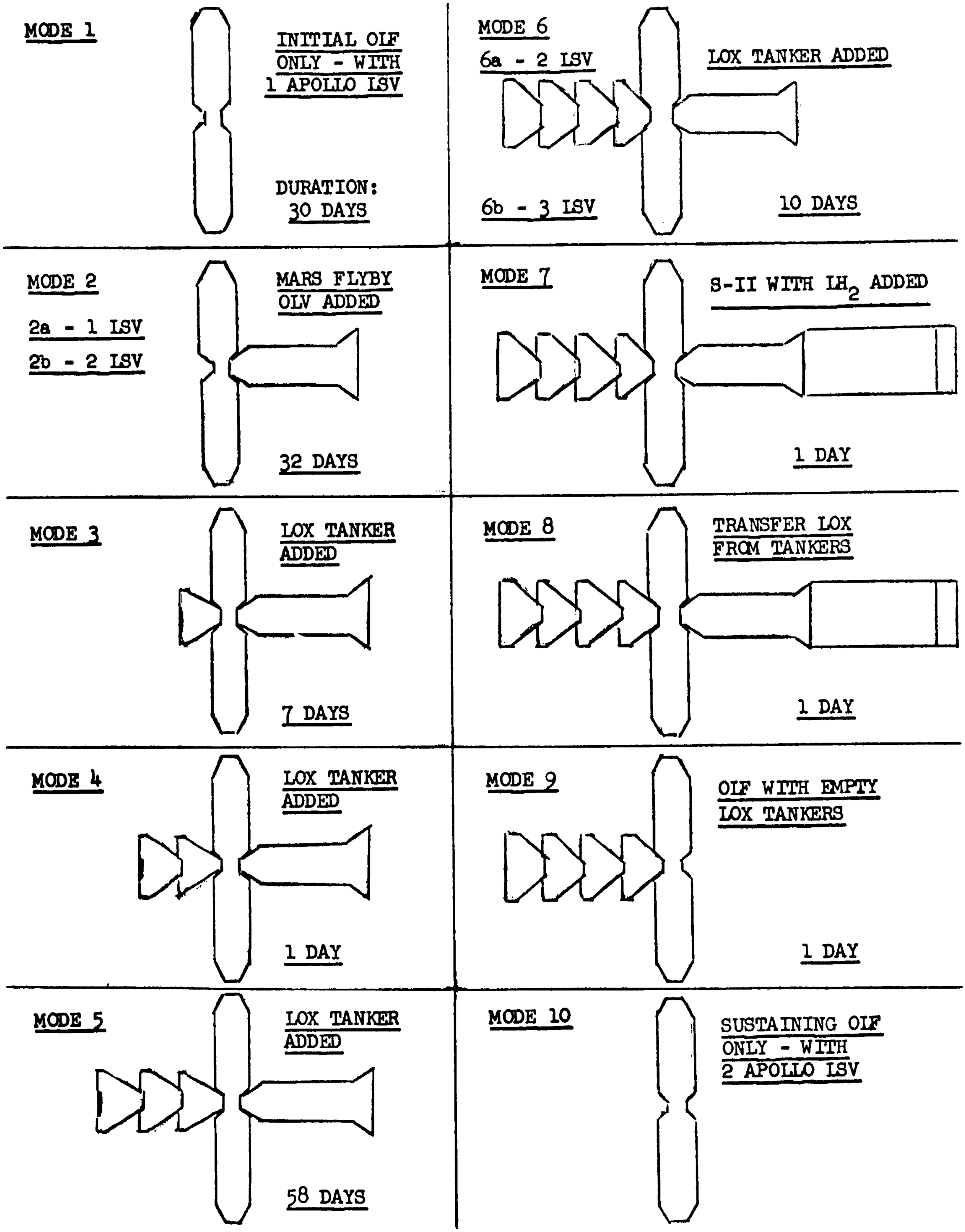

Figure 5.4-36: OLO CONFIGURATION MODES

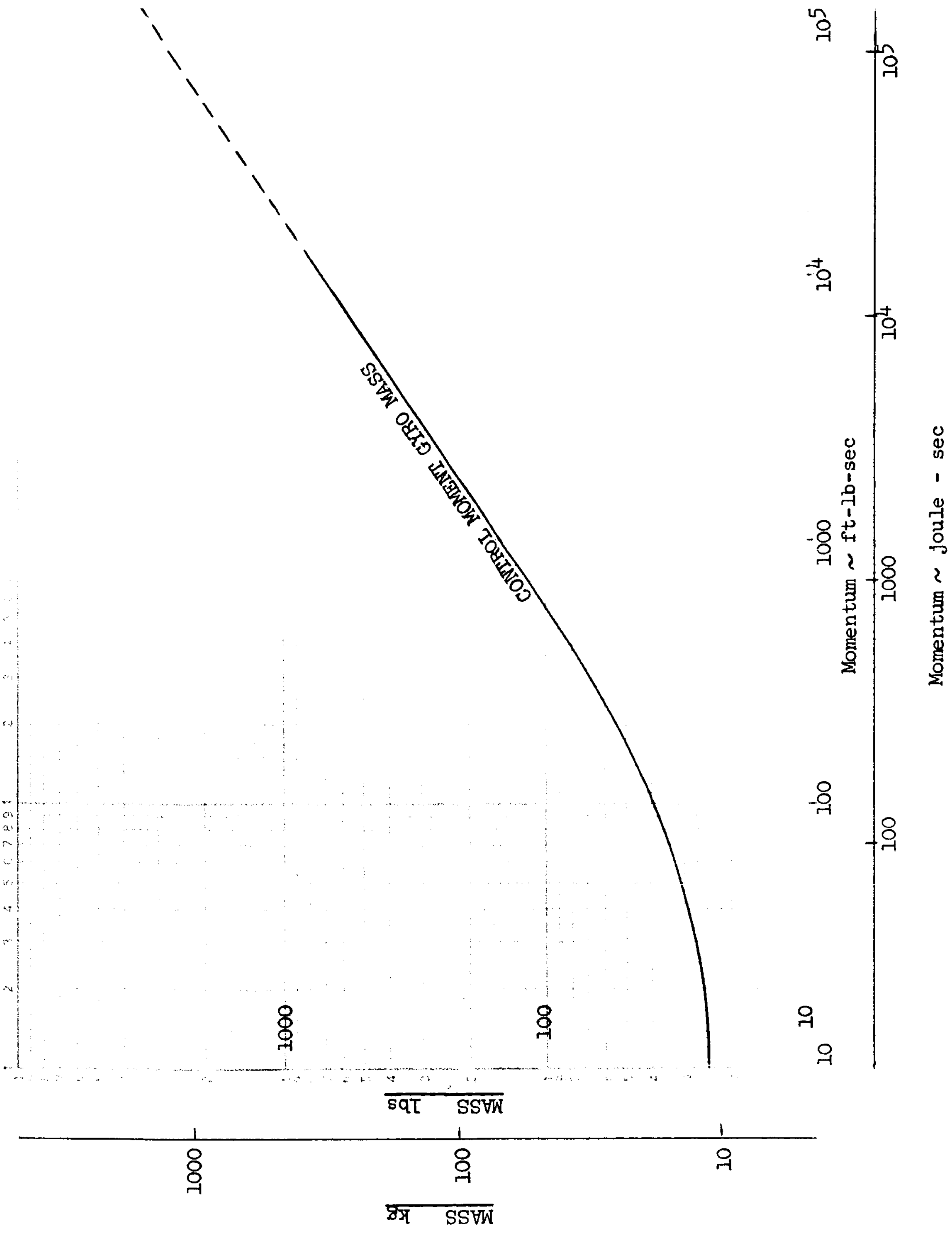

Figure 5.4-37: CONTROL MOMENT GYROS MASS VS MOMENTUM

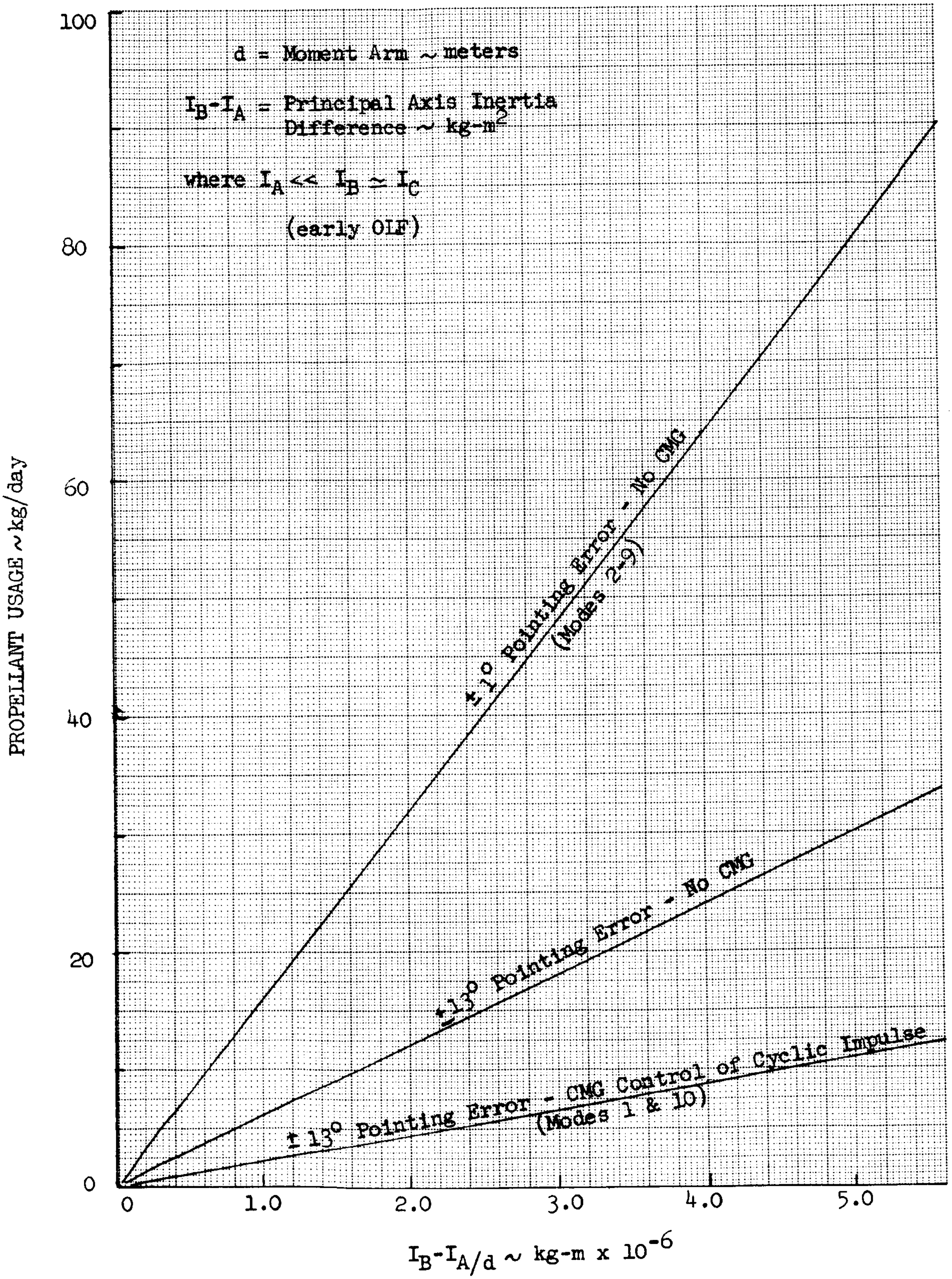

Figure 5.4-38: PROPELLANT USAGE RATES WITH SOLAR ORIENTATION

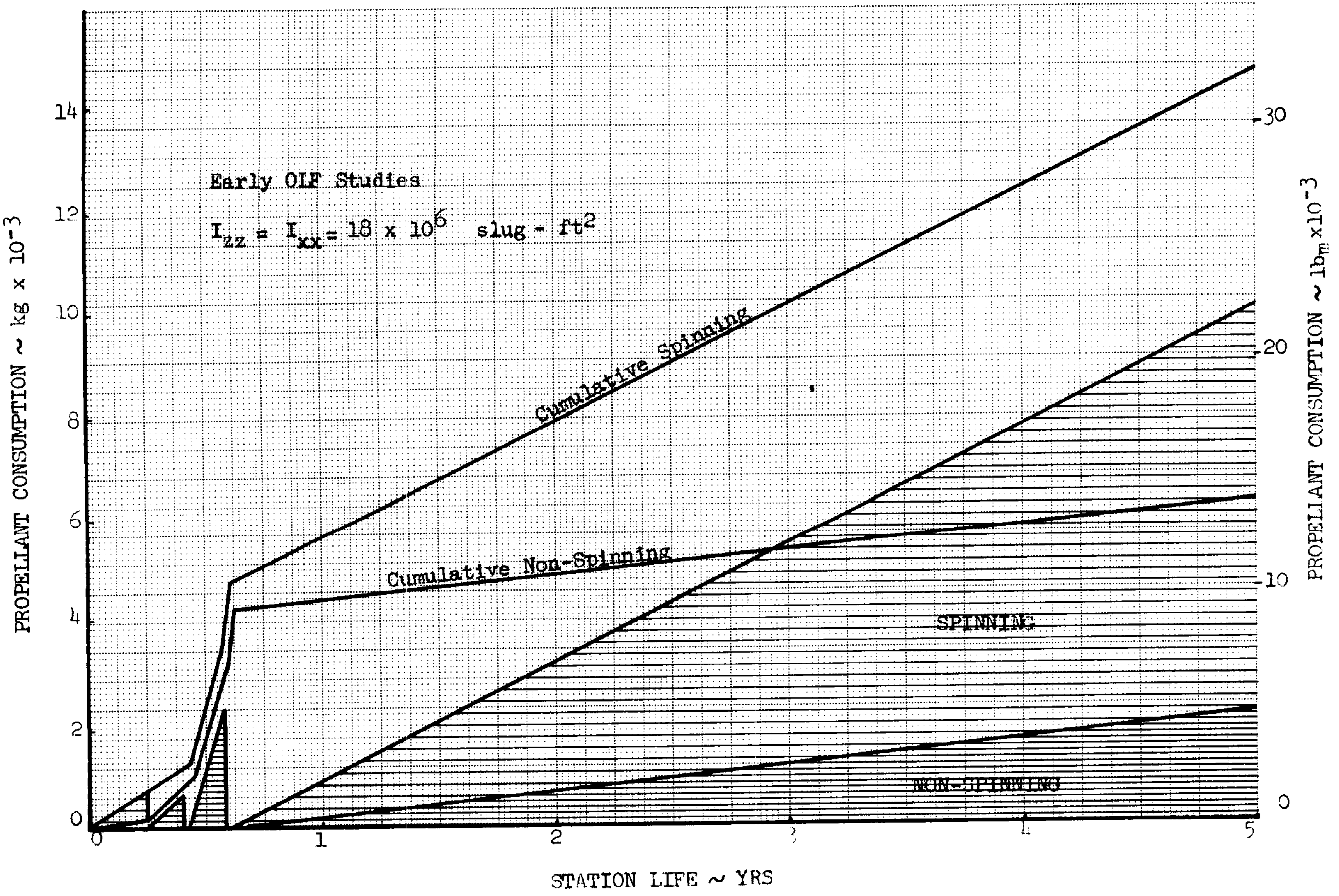

Figure 5.4-39: PROPELLANT REQUIREMENTS WITH SOLAR ORIENTATION

however, will cause orbit decay and impose a significant orbit keeping requirement.

3. Solar radiation. - This behaves in principle very much like aerodynamic drag excpet that the line of action is away from the sun instead of along the flight path. Orbit perturbations are negligible and torques can be reduced again by placing the center of pressure near the center of mass.

4. Magnetic field. - If the vehicle spins, the earth's magnetic field will induce eddy currents in the structure which will result in torques tending to reduce the spin rate. Small non-spinning magnetic fields and forces can be set up also, due to spacecraft wiring circuits interacting with the earth's magnetic field.

5. Intermittant forces. - Internal movement, docking impacts, and internal rotating machinery produce torques that generally have a small affect due to their short duration. Centrifuge operation would cause a sizeable effect unless two were contra-rotating simultaneously.

6 Micrometeoroid dust. - If the flux is omnidirectional in nature, these very small forces act in the same manner as the aerodynamic forces, but are insignificant by comparison at lower altitudes.

5.4.4.1 Requirements - Propulsive maneuvers and reaction torques required by the OLF include orbit injection, orbit keeping, docking assist, spin control, and separation, with attitude control during these maneuvers and other holding periods Continuous attitude orientation during orbit is not considered to be an initial OLF requirement. Orbit plane change corrections are not considered, since as little as 0.2 degree change would require about 700 Kg of propellant for the OLF alone. The orbit injection maneuvers, including injection error correction and circularization at 535 km altitude, will be considered to be accomplished by the OLF injection stage. Special propulsive requirements of the altitude control system for the execution of the R&D experiments have not been analyzed due to lock of specific experiment requirements. However, the initial OLF does have the capability of maintaining a specific altitude for extended periods of time with the existing system.

1. Orbit keeping maneuvers are periodically required to re-circularize the orbit at 535 km after orbit decay caused by aerodynamic and solar pressure drag. The propellant requirements to maintain this altitude are about one-tenth of those required to maintain orbit at 370 km (200 n. mi.). For the OLF proper, orbit decay of up to 20 km is considered acceptable between corrections. It is deemed desirable however that the OLF be within one km of the desired orbit at the time of the OLV launch.

2. Docking assist maneuvers may be required as a result of errors incurred during logistic supply rendezvous. Most of the corrections will be accomplished by the docking vehicle, through commands from the OLF in the case of unmanned vehicles. However, a capability for 3 m/s velocity change on the part of the OLF will be provided as backup.

3. Spin control is required for the spin condition to spin-up, spin-down, and to counteract damping torques primarily caused by the earth's magnetic field.

Based upon physiological studies by the NASA and others, a maximum spin rate of .4188 radians/sec (4 rpm) has been considered. In addition, recent studies at Boeing have indicated that a substantial fraction of Earth's surface gravity should be provided in order to justify the spinning mode from the physiological standpoint. Of primary concern in spinning configurations are the artificial gravity gradients and the Coriolis forces acting on man and the equipment he may be handling. In particular, preliminary studies indicate that the ratio of Coriolis force to gravity force should be less than unity. Figure 5.4-40 shows Coriolis and gravity forces vs. OLF station. The spin requirement has sized the OLF and, in turn, its momentum, inertia, and the propellant required for attitude control, maneuvers, and spin control. Extra vehicular activity (EVA) will require spin-stop for those operations where the astronaut must be near the OLF but not continuously attached.

4. After OLV checkout and prior to launch ignition, there is a requirement to disengage the OLF from the OLV and provide a safe separation distance within ten minutes time. The OLF will have the empty LOX tankers attached (Mode 9). The separation maneuver will provide a minimum separation distance of 1800 meters. At this distance, the OLF will have 0.006 exposure to shrapnel relative to the exposure prevalent at 150 meters separation, which represents an estimated extremety of blast danger.

5. Vehicle attitude control is required for orientation and holding during all maneuvers, including OLV launch. Continuous attitude control requirements for experiments or deep space communication are not included in the initial OLF design. Propellant tank capacity, however, is sized for a postulated "worst case" of intermittant spinning and attitude hold. Attitude control limit parameters are noted below:

	Attitude Hold Degrees	Angular Rate Threshold Degrees/Second
Non-Maneuver	1.0	0.1
Docking Maneuver	0.5	0.01
Other Maneuvers	5.0	0.1

Attitude control hold for one hour during rendezvous and docking is required. This is based upon rendezvous start at approximately 80 km from the OLF and docking maneuvers from 150 meters. The docking maneuver angular rate threshold is based upon docking at either end of the OLF. The rate and holding angle can be greater for docking at the hub.

5.4 4.2 Technical Studies. - The OLF and the Orbital Launch Operation, with the modes shown in Figure 5.4-36 offer a multitude of possible attitude control methods and reaction control arrangements. One of the more interesting studies is that of orbit keeping. Since the contribution of solar radiation pressure drag is on the order of 10^{-8} N/m^2 and aerodynamic drag at 535 km is about 5 X 10^{-7} N/m^2, the former is neglected in preliminary calculations of velocity and altitude change. The velocity makeup required is proportional to the variables noted below:

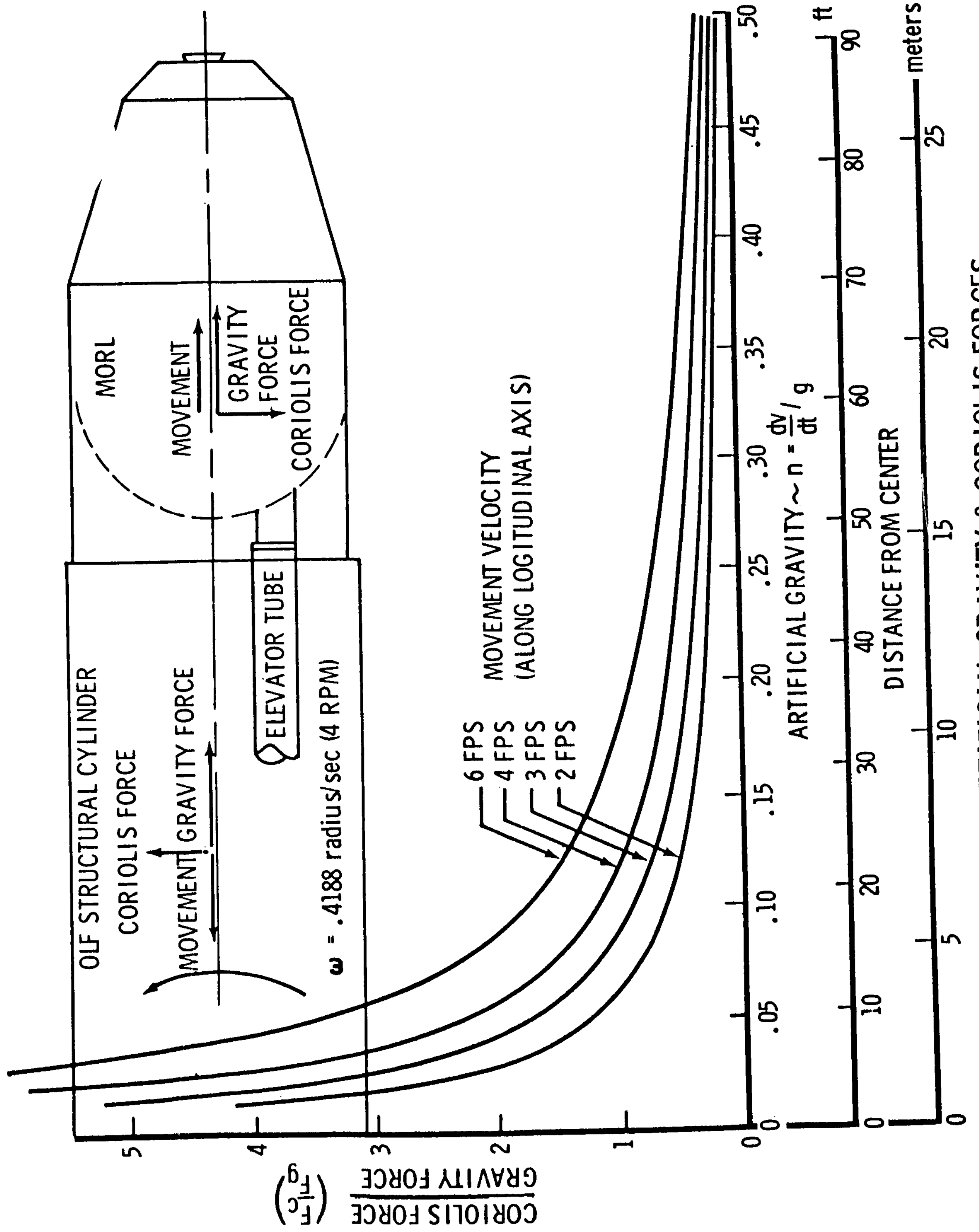

Figure 5.4-40: ARTIFICIAL GRAVITY & CORIOLIS FORCES

$$\Delta V: \rho V^2 C_D A/W \Delta t$$

Where ρ = atmospheric density

V = vehicle orbital velocity

W/C_DA = ballistic parameter

t = time interval

The atmospheric density at any altitude over 240 km varies with year, month, day, and hour or position in orbit. The atmosphere proposed by Harris and Priester (Reference - I. Harris and W. Priester, "Relation Between Theoretical and Observational Models of the Upper Atmosphere", NASA X-640-63-145, July 1963.) for a high solar flux of 250 x 10^{-22} W/m^2-cps is in agreement with the revised ARDC atmosphere used in existing Boeing computer programs. This is also the atmosphere used for the Phase IIA MORL studies. One difficulty of extending the Harris and Priester data for the high flux years of 1957-58 by 11 year solar cycles to 1968-69 or 1979-80, is that the maximum varies with each cycle. The 1968-69 maximum is expected to average out at somewhat less than 250 x 10^{-22} W/m^2-cps and the 1979-80 peak may be even lower. Use of the 250 x 10^{-22} W/m^2-cps atmosphere is thus a conservative approach Figure 5.4-41 shows a comparison of the density used in the MORL analysis and that of the Boeing model for the years 1968-69. Day and nighttime values have been averaged, as have the 27 day variations due to the solar rotational period The OLF mission may also take place in years of low solar activity, when the density at 535 km may be only 2% of the peak value used. Consideration should be given to lowering the OLF sustaining orbit for "quiet" years to enable greater efficiency and savings for the logistics missions, and to reduce the level of intensity of the radiation environment.

The ballistic parameter (m/C_DA) changes considerably with orbit attitude and mode during the OLO cycle. Random orientation adds about 20% to the average orbital drag area over that of solar orientation, however, gravity gradient orientation may increase this value to as much as 50% over that of solar orientation. The mass and drag area change considerably during each of the OLO modes. In addition, the center-of-gravity of each OLO assembly varies over a wide range, which necessitates considerations of maneuver methods or engine locations that differ from those of the OLF alone. Figure 5.4-42 shows preliminary estimates of mass, ballistic parameter, center of gravity, and mass moments of inertia for each of the OLO modes. The ballistic parameter is based upon random orientation.

Figure 5.4-43 shows propellant mass required for orbit keeping for each mode as a function of upkeep period. These values assume each mode is by itself for the period between orbit upkeep maneuvers as shown. Also shown is the docking assist reserve propellant required to provide 1.5, 3.0, or 4.5 m/sec for each mode to assist docking of an additional vehicle.

Spin control propellant for spin-up (or spin-down) is shown in Figure 5.4-44 For each docking and most detached extravehicular operations while the OLF is in the spinning mode, spin-stop and spin-start propellant must be included. Orbit keeping

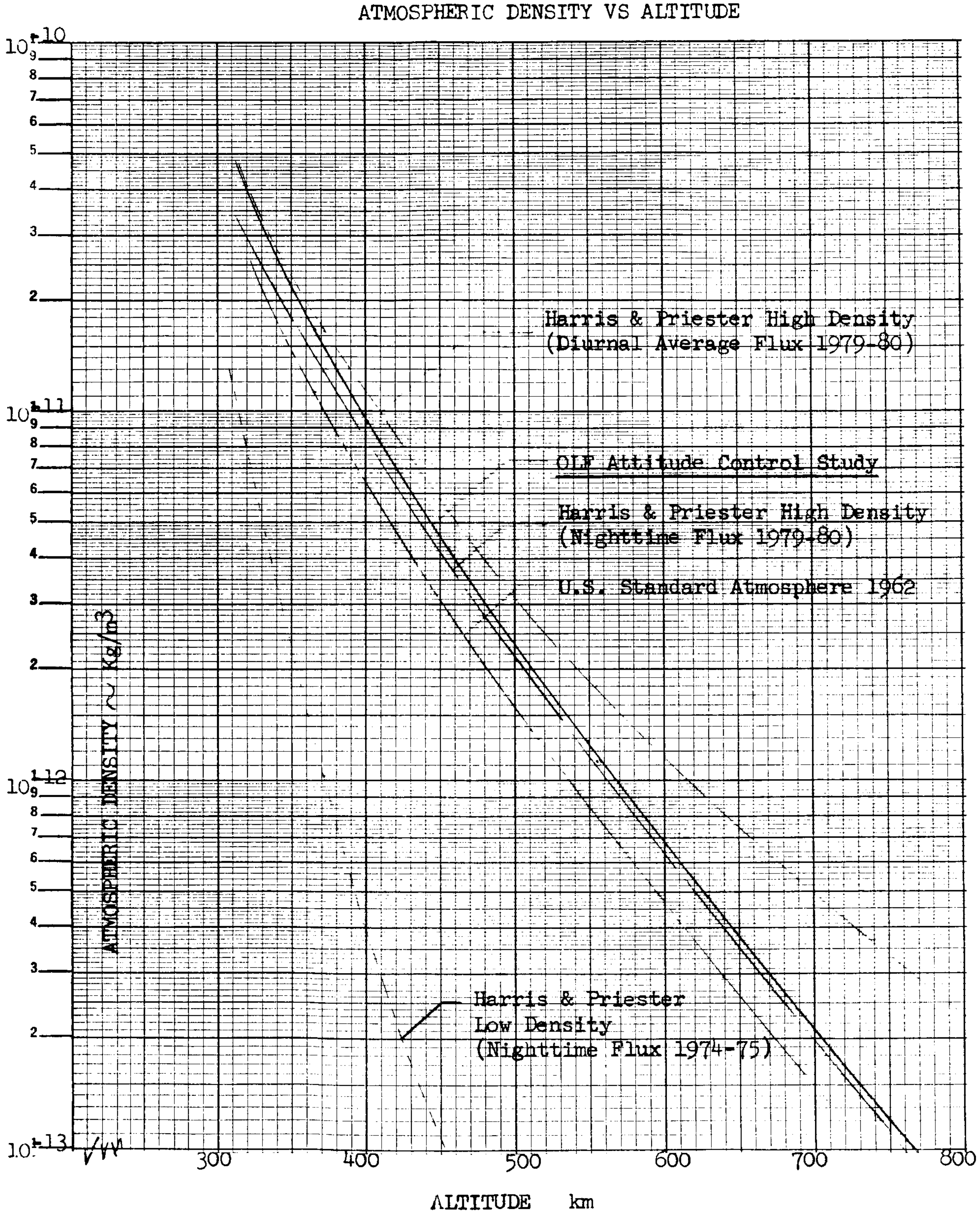

Figure 5.4-41: ATMOSPHERE DENSITY VS ALTITUDE

FIGURE 5.4-42 MASS PROPERTIES OF OLO MODES

Mode	$\frac{m}{C_DA}$	Mode Mass	C.G. X-Axis	I_{xx}	I_{yy}	I_{zz}
	kg/meter²	kg	cm	kg/meter² x 10^{-6}		
1 OLF + Apollo Total	132	73,092	.0	30.9	1.8	30.9
2a Add OLV① Total	239	186,024	+1260	31.4	47.2	76.0
2b Add 1st Logistics LSV Total	240	195,323	+1260	34.2	47.3	80.6
3 Add LOX Tanker #1② Total	334	295,995	+ 580	34.4	50.9	84.3
4 Add LOX Tanker #2 Total	394	396,758	-13	34.6	77.6	109.6
5 Add LOX Tanker #3 Total	445	497,521	-570	34.8	147.1	181.2
6a Add LOX Tanker #4 Total	480	598,284	-1100	35.0	280.0	312.0
6b Add 2nd Logistics LSV Total	485	608,717	-1100	39.4	280.2	318.2
7 Add S-IIB (with LH_2)① Transtage (dry)② Total	438	728,437	-270	40.2	458.5	596.0
8 Transfer LOX to S-IIB Total	435	728,437	+3230	40.2	1001.0	1041.0

① OLV & S-IIB per FPO Internal Note No. 1-64 by H. O. Ruppe, November 1964

② LOX Tanker & Transtage per LMSC-A748410 Tanker Design Study, 30 May 1965

continued on next page

FIGURE 5.4-42 MASS PROPERTIES OF OLD MODES-CONTINUED

Mode	$\frac{m}{C_DA}$	Mode Mass	C.G. X-AXIS	I_{xx}	I_{yy}	I_{zz}
	kg/meter^2	kg	cm	kg/meter^2 x 10^{-6}		
9 Launch OLV + S-IIB						
Transtage (wet)③						
Transferred Supplies and crew						
Total OLF + Empty Tankers	134	142,491	-810	37.5	27.1	67.6
10 Separate LSV + Waste						
+ Tankers						
Total OLF + 2 Apollo LSV	142	80,576	0	31.4	1.7	31.4

③ Propellant per IMSC-A742556 by W. T. Eaton, 22 March 1965

MODE		ORBIT KEEPING PROPELLANT LB/DAY				DOCKING ASSIST LB.		
		DAYS IN MODE SINCE LAST UPKEEP				RESERVE VELOCITY		
		10 DAYS	20 DAYS	30 DAYS	40 DAYS	5 FPS	10 FPS	15 FPS
1	OLF ONLY WITH 1 APOLLO	2.2	2.5	2.8	3.3	80.0	160.0	240.0
2	OLF/OLV	3.2	3.7	4.2	4.8	215.0	430.0	645.0
3	OLF/OLV/1 LOX TANKERS	3.6	4.2	4.8	5.5	330.0	660.0	990.0
4	OLF/OLV/2 LOX TANKERS	4.1	4.8	5.5	6.3	445.0	890.0	1335.0
5	OLF/OLV/3 LOX TANKERS	4.6	5.3	6.0	6.9	550.0	1100.0	1650.0
6	OLF/OLV/4 LOX TANKERS	5.1	5.9	6.7	7.6	665.0	1330.0	1995.0
7	OLF/OLV/4 TANKERS/SII	6.8	7.9	9.0	10.3	800.0	1600.0	2400.0
8	MODE 7 AFTER LOX TRANSFER	6.8	7.9	9.0	10.3	800.0	1600.0	2400.0
9	OLF/4 EMPTY LOX TANKERS	3.9	4.5	5.1	5.8	115.0	230.0	345.0
10	OLF ONLY WITH 2 APOLLOS	2.3	2.6	2.9	3.5	87.0	175.0	262.0

Figure 5.4-43: ORBIT KEEPING AND DOCKING ASSIST PROPELLANT

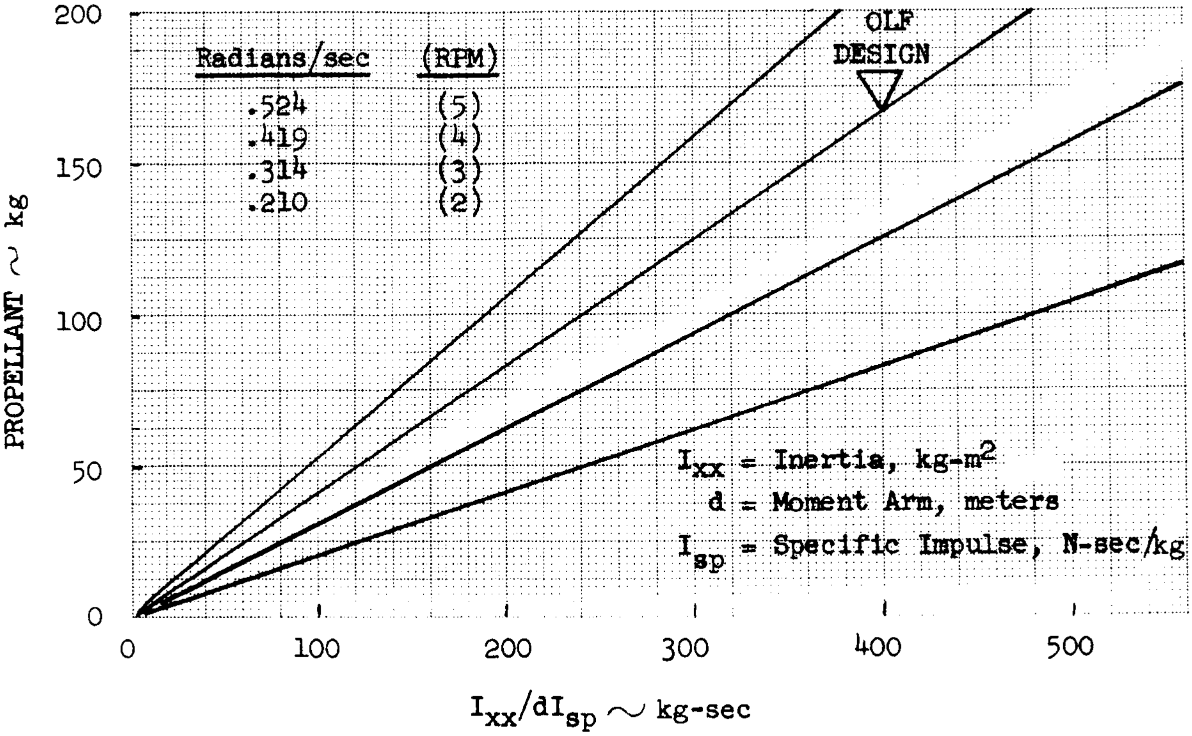

FIGURE 5.4-44 SPIN-UP PROPELLANT

and other maneuvers may be accomplished while spinning, providing the magnitude of the velocity change is not too great ($< \simeq$ m/sec). To accomplish maneuvers while spinning, however, additional logic must be included in the control system to provide thrust through a selected limiting angle during each revolution. If thrust is applied over 30°, about 15% additional maneuver propellant is required due to thrust misalignment and lowered specific impulse for each thrust. About 40 revolutions of the OLF are required before an OLF orbit upkeep maneuver may be completed. In addition, to align the OLF spin axis normal to the orbit plane for the upkeep maneuver, a spin axis orientation maneuver by precession is required. The mass of propellant for precession is a function of the angle of precession required, as follows:

$$W_p: \; I_{xx}\, \omega \Omega$$

Where ω = Spin Rate about X-axis (0.419 radians/second)

Ω = Precession Angle, radians

Thus, for random orientation while spinning, the propellant required to align the spin and orbit planes for orbit upkeeping can vary from a minimum of about 5 kg to as much as 170 kg. Since spin stop/start propellant for the OLF is about 340 kg, the weight penalty for orbit upkeep while spinning may be less than that when a stop/start spin is used.

The spin uprate propellant required to counteract magnetic spin damping by the Earth's magnetic field is estimated to be 0.77 kg/day for the OLF. The following approximations were used to determine the torque required:

$$T = -8 C \omega \sigma \tau \mu^2 J_N f^2 r^4 \left(1 - \frac{\pi f}{2} + \beta\right)$$

where

$C = 7.376 \times 10^{-8}$ ft-lb/watt-sec

σ = Skin Electrical Conductivity abmhos/cm

τ = Skin Thickness ~ cm

μ = Magnetic Permeability ~ gauss/oersted

J_N = North Magnetic Pole Field Strength ~ oersteds

f = Vehicle Fineness Ratio

r = Radius of Vehicle ~ ft

β = Angle between Longitudinal Axis and Equitorial Plane

For OLF operations, since spin-stop is required for docking and some EVA operations, the orbit keeping function can be integrated by accomplishing the maneuver during periods of non-spin. Figure 5.4-45 shows the propellant mass trade between stop/start spin for each maneuver; orbit upkeep while spinning; and, integrated non-spinning maneuvers. Three extravehicular operations requiring non-spin have been assumed for a 90-day OLF period, two of which can be scheduled in advance. Results of the spin control study, showing only the propellant affected by the spin control method, are shown below:

Start/Stop Spin for Each Maneuver	2568 kg
Orbit Upkeep While Spinning	1915 kg
Integrated Non-Spinning Maneuvers	1561 kg

OCCURRENCE	DAY	STOP/START SPIN FOR EACH MANEUVER			ORBIT UPKEEP WHILE SPINNING			INTEGRAL NON-SPINNING MANEUVERS ①		
		ORIENTATION AND HOLD (kg)	SPIN CONTROL (kg)	MANEUVER (kg)	ORIENTATION AND HOLD (kg)	SPIN CONTROL (kg)	MANEUVER (kg)	ORIENTATION AND HOLD (kg)	SPIN CONTROL (kg)	MANEUVER (kg)
LSV DEPARTURE	0	4.0	167.8		4.0	167.8		4.0	①	
EVA ② (UNSCHEDULED)	Any		335.7			335.7			①	
ORBIT UPKEEP	30	4.0	335.7	43.5	114.8③		50.2	4.0	335.7	43.5
EVA (UNSCHEDULED)	Any		335.7			335.7			335.7	
ORBIT UPKEEP	60	4.0	335.7	43.5	114.8		50.2	4.0	335.7	43.5
EVA (UNSCHEDULED)	Any		335.7			335.7			①	
ORBIT UPKEEP	90	4.0	335.7	43.5	114.8		50.2	4.0	335.7	43.5
SPINUP RATE	④		68.0			69.4			68.0	
LSV DOCK	90	4.0	167.8		4.0	167.8		4.0	①	
TOTAL AFFECTED BY SPIN CONTROL	90 Days	20.0	2417.8	130.5	352.4	1412.3	150.6	20.0	1410.8	130.5

① LSV docking, LSV departure, scheduled EVA and orbit upkeep during same non-spinning period.

② Extra Vehicular Activity requiring OLF to be non-spinning, propellant for OSE or EVA maneuver not shown.

③ Propellant required for average precession of spin axis from random orientation.

④ Applied daily by attitude control nozzles - 90 day total is 68.0 kg with 40 hours non-spin.

Figure 5.4-45: OLF SPIN CONTROL

Due to the large propellant mass required for stop-start spin, the orbit upkeep maneuver should be accomplished while spinning if no other requirement for stop-start spin exists between 90-day resupply missions.

During the OLO 170-day period, all maneuver propellant requirements are proportional to the mass properties of the particular mode that is performing the maneuver. As mass is added by docked vehicles, the propellant required for translation goes up directly as the increase in mass. For angular changes directly as the inertia and moment arms (d) for reaction control:

$$W_p \simeq W\left(e^{\Delta V/I_{sp}g_c} - 1\right) \qquad \text{Translation}$$

$$W_p \simeq I_{zz} - I_{yy}/d\, I_{sp} \qquad \text{Attitude Control}$$

$$W_p \simeq 2I_{zz}\,\omega/d\, I_{sp} \qquad \text{Orient at Rate } \omega$$

The attitude control and orientation propellant can be lessened for each mode by utilizing nozzles located at the extremeties of each axis of the total OLO assembly. Thus, when the OLV is docked, its reaction control feed system can be coupled to the existing system controlled by the OLF. It is also possible to use propellant aboard each added vehicle, however, this requires a considerably greater amount of propellant than propellant transfer by the OLF. Since the philosophy of the OLF is to provide the requirements for OLO, it will be assumed that all propellants for the OLO period are stored aboard the OLF. Figure 5.4-46 shows orientation and attitude control propellant for each OLO mode vs. nozzle location. Column (A) figures are for reaction nozzles located on each docked vehicle and column (B) figures are for nozzles located on the OLF alone. A simple compromise which yields good propellant savings can be obtained by coupling to nozzles on the OLV and S-II transtage, but not on the LOX tankers.

Since orbit upkeep requirements are based upon loss of velocity and subsequent change of perigee altitude in orbit, which decreases gradually with time, it is desirable to perform the orbit upkeep translation maneuver by the least-mass assembly in orbit at any given time. Figure 5.4-47 shows orbit upkeep propellant and attendant orientation propellant for various fixed periods of upkeep and also, for selected upkeep periods where the maneuver is performed just prior to adding a docked vehicle. The results are summarized below:

	Propellant ~ kg		
Orbit Upkeep Period	Orientation	Upkeep	Total
Every 10 days	124.0	331.6	455.6
Every 20 days	60.3	375.4	435.7
Every 30 days	36.3	354.8	391.1
Every 40 days	33.8	560.2	594.0
At Selected Times	55.9	360.5	416.4

				ATTITUDE HOLD PROPELLANT					
		ORIENTATION PROPELLANT		LIMIT 1°		LIMIT 5°		LIMIT 15°	
MODE		kg (A)	kg (B)	kg/hr (A)	kg/hr (B)	kg/hr (A)	kg/hr (B)	kg/hr (A)	kg/hr (B)
1	OLF ONLY WITH 1 APOLLO	3.6	3.6	.37	.37	.25	.25	.13	.13
2	OLF/OLV	6.4	6.4	.49	.49	.34	.34	.17	.17
3	OLF/OLV/1 LOX TANKER	6.7	6.7	.52	.52	.36	.36	.19	.19
4	OLF/OLV/2 LOX TANKERS	6.5	8.3	.64	.87	.44	.61	.23	.31
5	OLF/OLV/3 LOX TANKERS	8.1	12.2	.85	1.42	.59	.99	.30	.51
6	OLF/OLV/4 LOX TANKERS	11.0	20.0	1.18	2.35	.83	1.64	.42	.84
7	OLF/OLV/4 TANKERS/SII	12.9	29.8	1.50	3.91	1.05	2.73	.54	1.39
8	MODE 7 AFTER LOX TRANSFER	25.2	62.1	3.18	8.30	2.22	5.81	1.13	2.96
9	OLF/4 EMPTY LOX TANKERS	5.0	5.0	.33	.44	.23	.30	.12	.15
10	OLF ONLY WITH 2 APOLLOS	3.7	3.7	.37	.37	.25	.25	.13	.13

(A) Using nozzles on OLV, Tankers and SII transtage as available after rendezvous hookup.

(B) Using nozzles on OLF only

Figure 5.4-46: ATTITUDE CONTROL PROPELLANT VS NOZZLE LOCATION

		ORIENTATION PROPELLANT					MANEUVER PROPELLANT				
		ORBIT UPKEEP PERIOD (DAYS)					ORBIT UPKEEP PERIOD (DAYS)				
MODE	DAY	10	20	30	40	SELECTED	10	20	30	40	SELECTED
(1)	0	(kg)	(kg)	(kg)	(kg)	(kg)	(kg)	(kg)	(kg)	(kg)	(kg)
(1)	10	3.6					11.2				
(1)	20	3.6	3.6				11.2	23.8			
(1)	30	3.6		3.6		3.6	11.2		40.2		40.4
(2a)	40	6.4	6.4		6.4		16.1	47.1		138.3	
(2a)	50	6.4					16.1				
(2a)	60	6.4	6.4	6.4		6.4	16.1	34.0	57.5		57.6
(2a)	70	6.4					16.1				
(2a)	80	6.4	6.4		6.4		16.1	34.0		86.6	
(2a)	90	6.4		6.4		6.4	16.1		57.5		57.5
(2b)	92										
(3)	99					6.7					18.1
(4)	100	6.5	6.5				26.3	62.1			
(5)	110	8.1					23.2				
(5)	120	8.1	8.1	8.1	8.1		23.2	49.1	94.3	164.2	
(5)	130	8.1				8.1	23.2				69.9
(5)	140	8.1	8.1				23.2	49.1			
(5)	150	8.1		8.1			23.2		83.0		
(5)	158					8.1					67.1
(6b)	160	11.0	11.0		11.0		27.4	58.4		151.0	
(6b)	168										
(7)	169					12.9					38.1
(8)	170	12.9					32.0				
(10)	180	3.7	3.7	3.7	3.7	3.7		17.9	22.2	20.0	11.7
TOTALS		123.8	60.2	36.3	35.6	(55.9)	331.9	375.5	354.7	560.1	(360.5)

Figure 5.4-47: ORBIT UPKEEP PROPELLANT VS PERIOD

Although the 30-day upkeep period looks best, only the 10-day and selected time upkeep periods provide an orbit correction at OLV launch day. Hence, if orbit upkeep at or just prior to OLV launch is desired, orbit maneuvers during OLO should be made at selected intervals to conserve propellant. Attitude hold propellant during the maneuver has not been included in Figure 5.4-47. With thrust of 1334 Newtons (300 lb_f), the time for selected maneuvers varies from 26 seconds to 240 seconds. Twice this thrust (600 lb_f) yields one-half the burn time. If center-of-gravity misalignment can be held to a reasonable figure, attitude hold propellant will be in the order of one kilogram.

Figure 5.4-48 shows orbit upkeep orientation and propellant requirements for continuous non-spinning (zero-gravity) operation. In this mode it appears that a 20-day upkeep period is best, although 10 to 30 day upkeep periods are all close. Figure 5.4-49 shows the long term maximum added mass of propellant due to the spinning mode with random orientation. The lower curve shows total propellant with orbit upkeep at 20-day intervals for continuous non-spinning operation and the upper curve shows total propellant for the integrated spinning mode, which has orbit keeping, docking, and EVA operation at 30-day intervals, with the exception of one unscheduled EVA stop/start spin every 90 days. The curves show all propellant for the OLF itself in non-oriented orbit, including docking assist propellant, but exclude propellant for OSE or EVA since these maneuvers are not by the OLF and are not well defined.

The separation and launch maneuvers include all the necessary maneuvers by the OLF just prior to and during the OLV launch. Various propellant requirements are shown below. Separation propellant of 226.8 kg provides 1800 meters separation in 10 minutes using 1334 Newtons (300 lb_f) of thrust. The same propellant will provide one-half the separation distance in 5 minutes using twice this thrust. Separation and launch maneuvers are itemized below:

Maneuver	Propellant
Orient Mode 8	25.2 kg
Uncouple Mode 9	.9 kg
Control Thrust Alignment	3.2 kg
Separation Thrust and Retro	226.8 kg
Orient Mode 9	5.0 kg
Hold Mode 9 During OLV Launch	1.0 kg

Vehicle Attitude Disturbances. - Vehicle attitude disturbances and attitude control studies were made for the earlier OLF design which had solar panel electrical power and somewhat less inertia than the present concept.

Aerodynamic, magnetic, solar pressure, crew movement, docking, and gravity gradient induced disturbance torques were evaluated. All except the latter required negligible angular impulse expenditure for control.

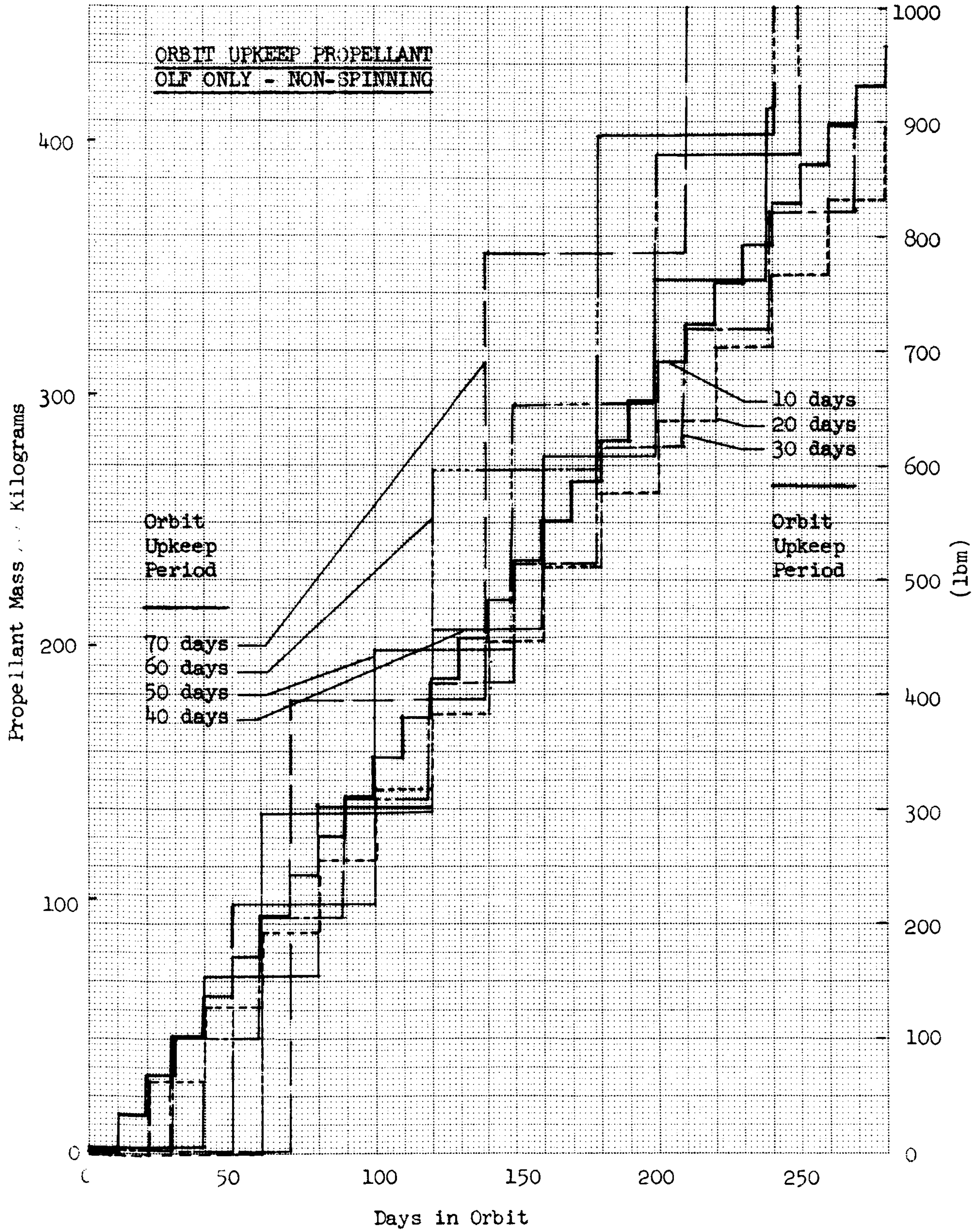

Figure 5.4-48: ORBIT KEEPING PROPELLANT - OLF NON-SPINNING

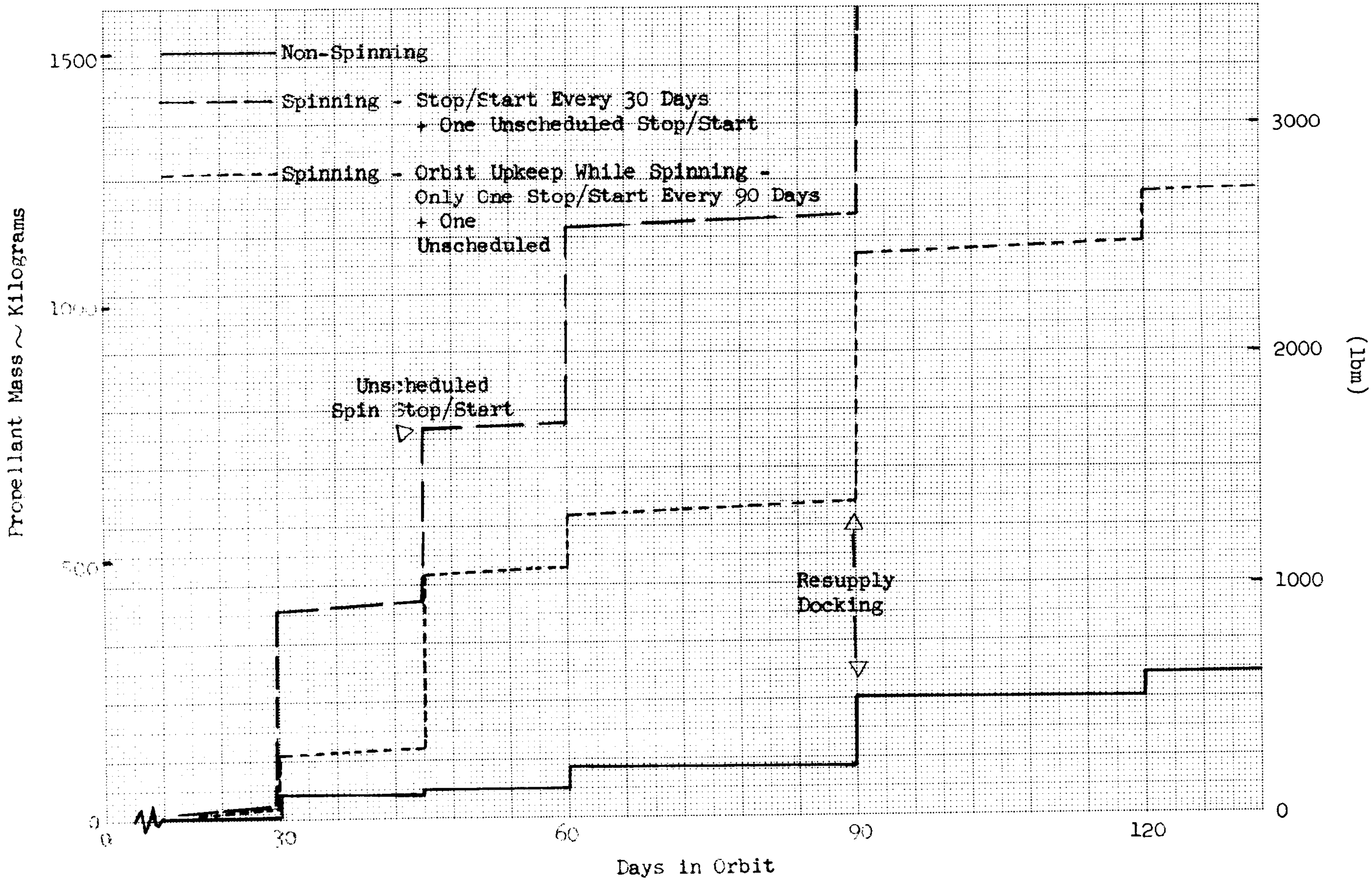

Figure 5.4-49: OLF PROPELLANT SPINNING VS NON-SPINNING

In analyzing the gravity gradient disturbances, the methods of Liska and Zimmerman (Reference 16) were used. The vehicle is oriented with respect to the orbital plane and to sun as shown in Figure 5.4-50. In this orientation the gravity gradient torques in vehicle coordinates are:

$$
\begin{aligned}
\frac{2\rho_o^3}{3G}\,\bar{T} = \Big\{ & \sin 2\phi \Big[(A-B)(\sin^3\beta\cos\theta + (A-C)(-\sin\beta\cos\theta)\Big] \\
& +\sin 2\theta \Big[(A-B)(-\cos^3\beta\sin^2\phi + (A-C)(\cos\beta\sin^2\phi)\Big] \\
& +(A-B)\sin 2\beta \Big[\cos 2\phi\sin\theta\cos\theta\sin\beta + \sin\phi\cos\phi\cos\theta\cos\beta \\
& \qquad -\cos^2\phi\cos\theta\sin\theta\sin\beta\Big]\Big\}\,\bar{i} \\
& +\Big\{\sin 2\phi \Big[(A-B)(\sin^2\beta\cos\beta\cos\theta) + (A-C)(-\cos\beta\cos\theta)\Big] \\
& +\sin 2\theta \Big[(A-B)(\cos^2\beta\sin\beta\sin^2\phi) - (A-C)(\sin\beta\sin^2\phi)\Big] \\
& +(A-B)\sin 2\beta \Big[\cos 2\phi\sin\theta\cos\theta\cos\beta - \sin\phi\cos\phi\cos\theta\sin\beta \\
& \qquad -\cos^2\phi\cos\theta\sin\theta\cos\beta\Big]\Big\}\,\bar{j} \\
& +\Big\{\sin 2\phi \Big[(A-B)(-\sin\theta\cos 2\beta) \\
& +(A-B)\sin 2\beta\cos 2\phi\sin^2\theta + \cos^2\phi\cos^2\theta\Big]\Big\}\,\bar{k}
\end{aligned}
$$

Where A, B, C are the vehicle moments of inertia corresponding to the $\bar{i}$, $\bar{j}$, $\bar{k}$ vehicle axes, repsectively. P_o is the orbital radius in feet and G is the gravitational constant of the earth. The angles are defined in Figure 5.4-50.

Reference 16 describes two applicable control methods for a sun-oriented vehicle. In one method (constant antle) the angle β remains a constant, and therefore the vehicle orientation with respect to the sun remains fixed, for any one orbit. The other method (constant rate) requires β to increase with ϕ($\beta = \pi/2+\phi$) and therefore the vehicle rotates at orbital rate about its sun oriented axis. Reference 16 indicates that significant savings can be obtained in attitude control propellants by optimizing the switch over point from one law to the other. The least propellant is required when the angle between the sun line of sight and the line normal to the vehicle x-y plane (θ) is allowed to go as large as possible consistent with the electrical output of the solar cells. An angle of 13° was established as a maximum and $\theta = \pm 11°$ was selected for the switchover point. Under these constraints, the above equations were integrated with respect to time and evaluated for $\theta = 0, \pm 11°, \pm 45°$, and $\pm 90°$. The maximum angular impulse disturbance was found to occur at $\theta = -11°$ and is shown plotted in normalized form in Figure 5.4-51. Figure 5.4-52 shows curves faired through the caluclated maximum impulse values. The maximum impulse shown is 42,300 joule-secs. for a moment of inertia difference of 2.45×10^6 kg-m^2 at the OLF orbital altitude. Higher inertias would result in correspondingly higher impulses. The CMG momentum requirements were established for the solar panel oriented mode by using Figure 5.4-51. The total momentum requirement per axis is $\frac{1}{0.867}$ times the requirement determined from Figure 5.4-51, since

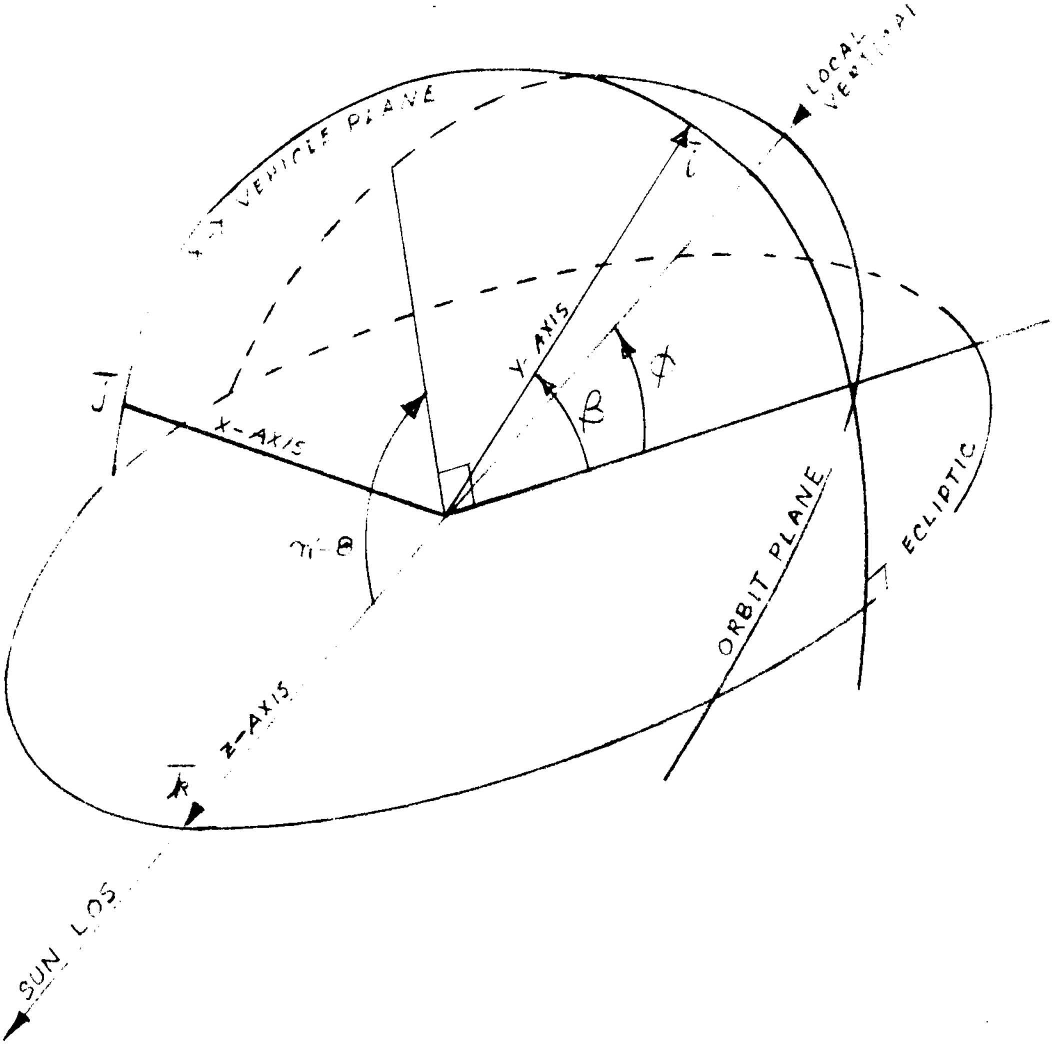

Figure 5.4-50: ATTITUDE CONTROL COORDINATE DEFINITION

FIGURE 5.4-51 GRAVITY GRADIENT DISTURBANCE

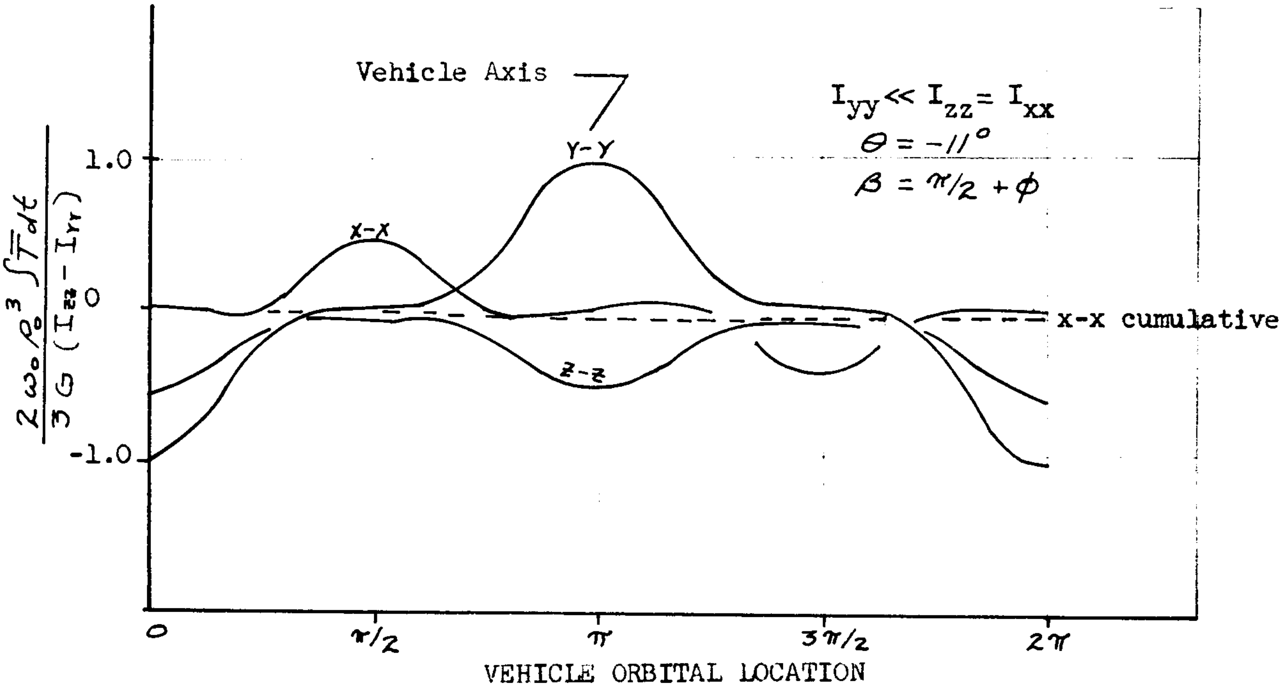

FIGURE 5.4-52 MAXIMUM CYCLIC GRAVITY GRADIENT DISTURBANCE

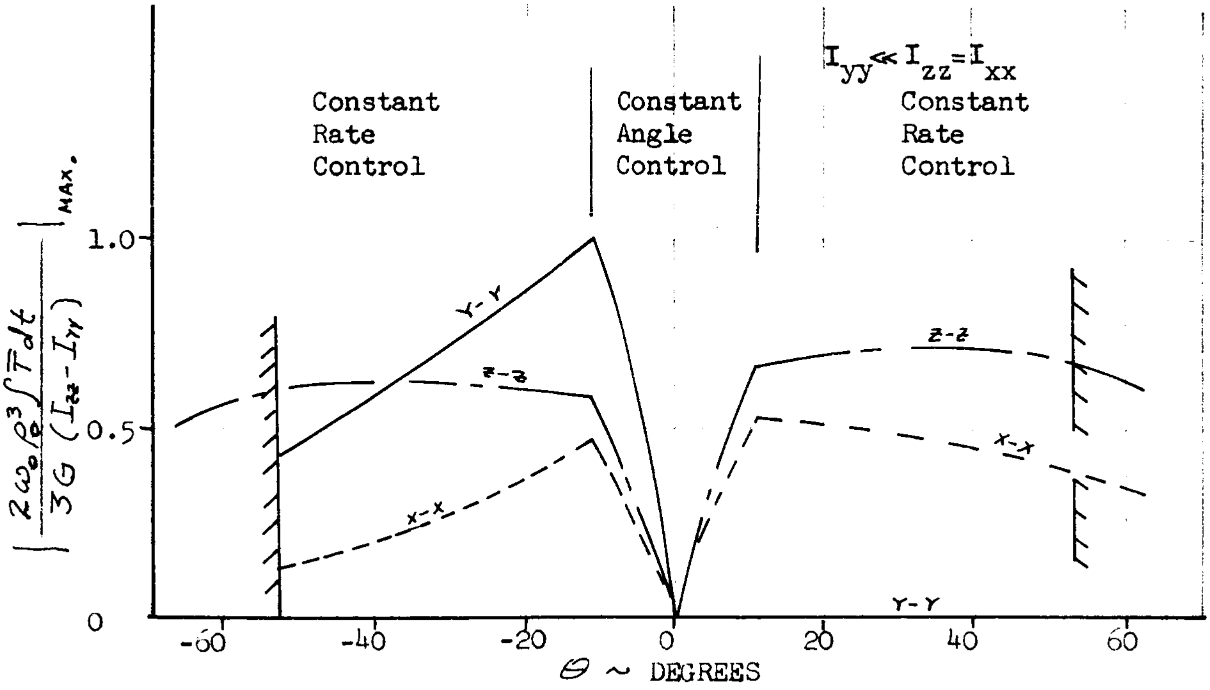

the gyro gimbal angles should not exceed 60°. CMG weight was then determined from Figure 5.4-37 and the electrical power from Figure 5.4-53.

In the process of establishing the earlier OLF stabilization and control concepts, trade studies were made for a vehicle with $I_{yy} << I_{zz} = I_{xx} = 25.0 \times 10^6$ kg-m^2. Figure 5.4-54 indicates the system weight comparison of an integrated CMG-RCS system with an all RCS system. The integrated system is clearly superior. Figure 5.4-39 shows the difference in propellant consumption of a spinning versus a non-spinning mode 10 configuration. The spinning mode was relegated to backup status as a result. The current initial OLF conceptual design, using radioisotope power and non-oriented or random attitudes, cannot be assumed to have enough cyclical torques to warrant use of a CMG. Should advanced concepts require pointing or orientation for over 100 days of operation, use of a CMG should be considered.

A study of propellant pressurization gases was also made. In general, helium gas and tank weights are lower than nitrogen gas and tank weights; however, higher helium volume leakage rates offset the advantage when the pressurized propellant volume is less than a certain amount. This is because most of the gas leakage is through fittings and valves which, in turn, is constant for a given system. Figure 5.4-55 shows helium vs. nitrogen pressurization system mass vs. propellant storage volume for a 135-day period with leakage included in the calculations. Both helium and nitrogen systems have larger mass for pressures over about 2×10^7 N/m^2, with nitrogen increasing at a greater rate due to its higher compressibility factor. The crossover point where higher helium leakage rates make this system less desirable appears to be at about 0.4 cubic meters. Since the initial OLF launch does not appear to be weight limited, whereas the resupply vehicles may be weight and/or volume limited, helium pressurant and replaceable helium tanks at 4.14×10^7 N/m^2 (6000 psia) are proposed. Tank replacement is considered to be simpler than high pressure transfer.

5.4.4.3 Recommended System. - The primary differences between the recommended OLF attitude control and navigation system and that of the MORL Phase II vehicles are noted below:

	MORL	OLF
Attitude thrusters	12 - 222 N	24 - 222 N
Nozzle location (MORL)	One End (Aft)	Each End (Fwd)
Control moment gyros	Yes	No
Maneuver thrusters	4 - 667 N	4 - 667 N
Maneuver direction	Longitudinal	Lateral

Control moment gyros are not deemed necessary for the initial OLF which is in a non-oriented orbit attitude. However, if the continued spinning mode were deemed necessary, small control moment gyros could be used to control precession torques to help keep the spin axis normal to the orbital plane. This in turn would enable orbit upkeep maneuvers to be performed while spinning, without requiring excessive

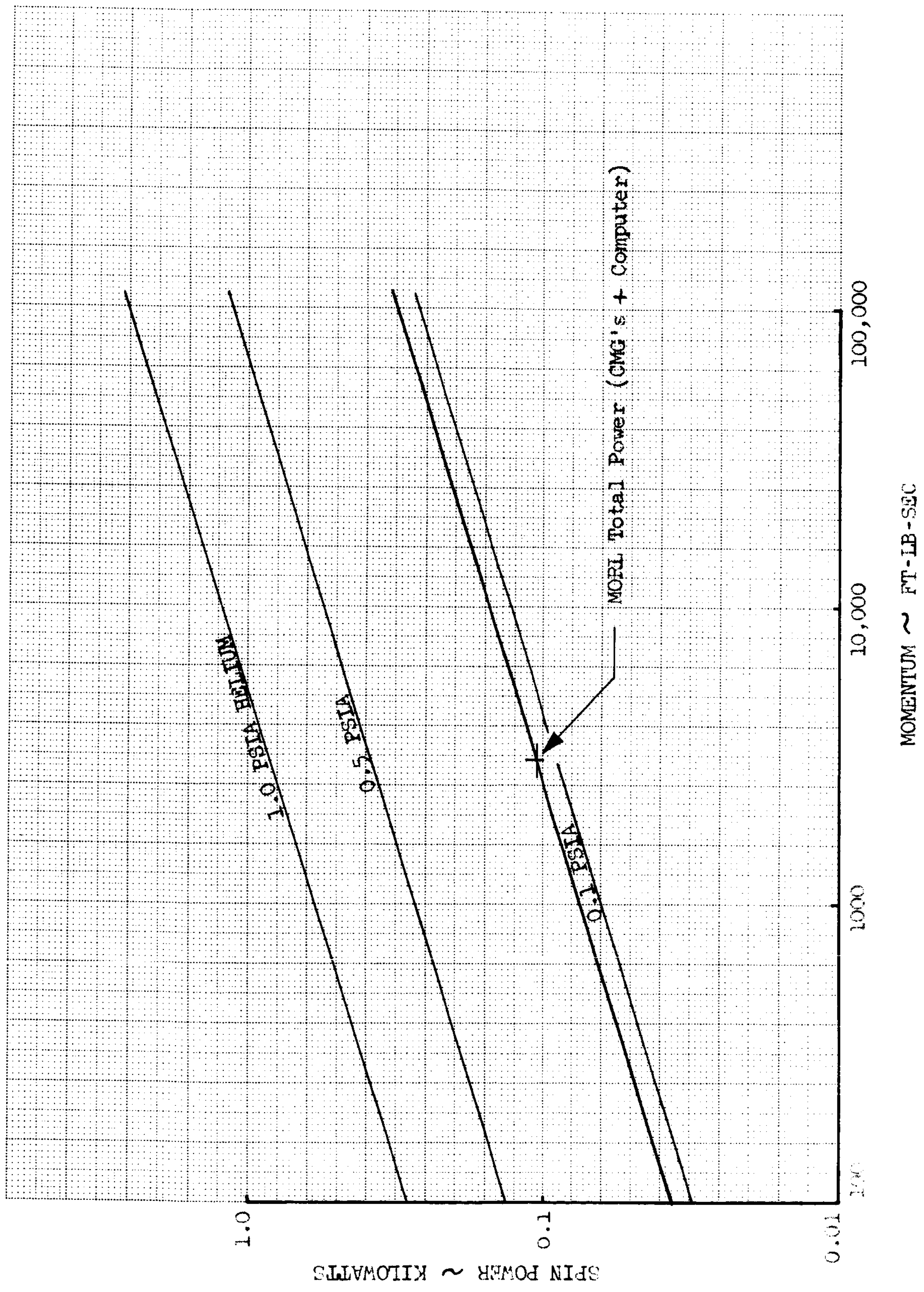

Figure 5.4-53: CONTROL MOMENT GYRO SPIN POWER

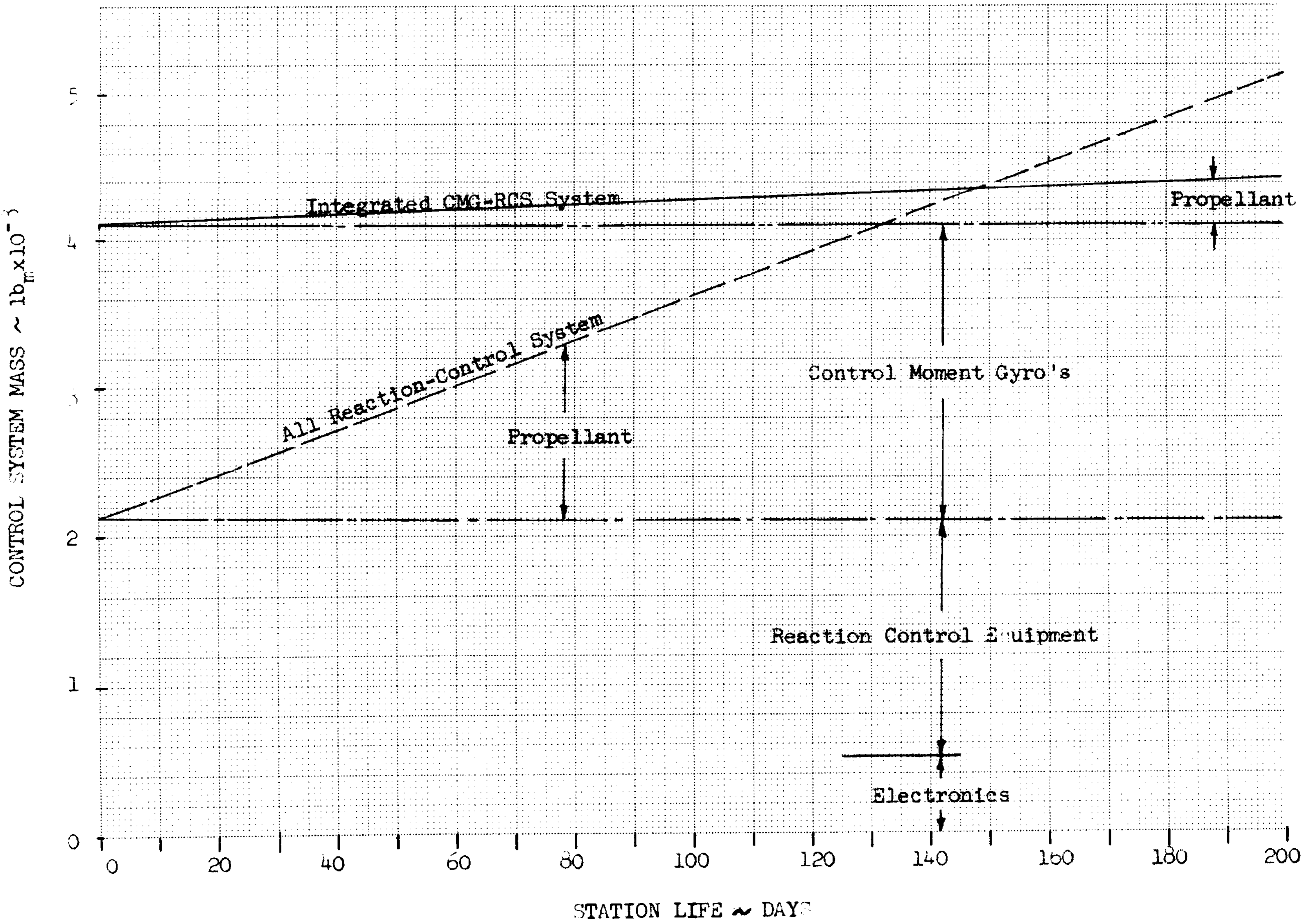

Figure 5.4-54: ATTITUDE CONTROL SYSTEM TRADES

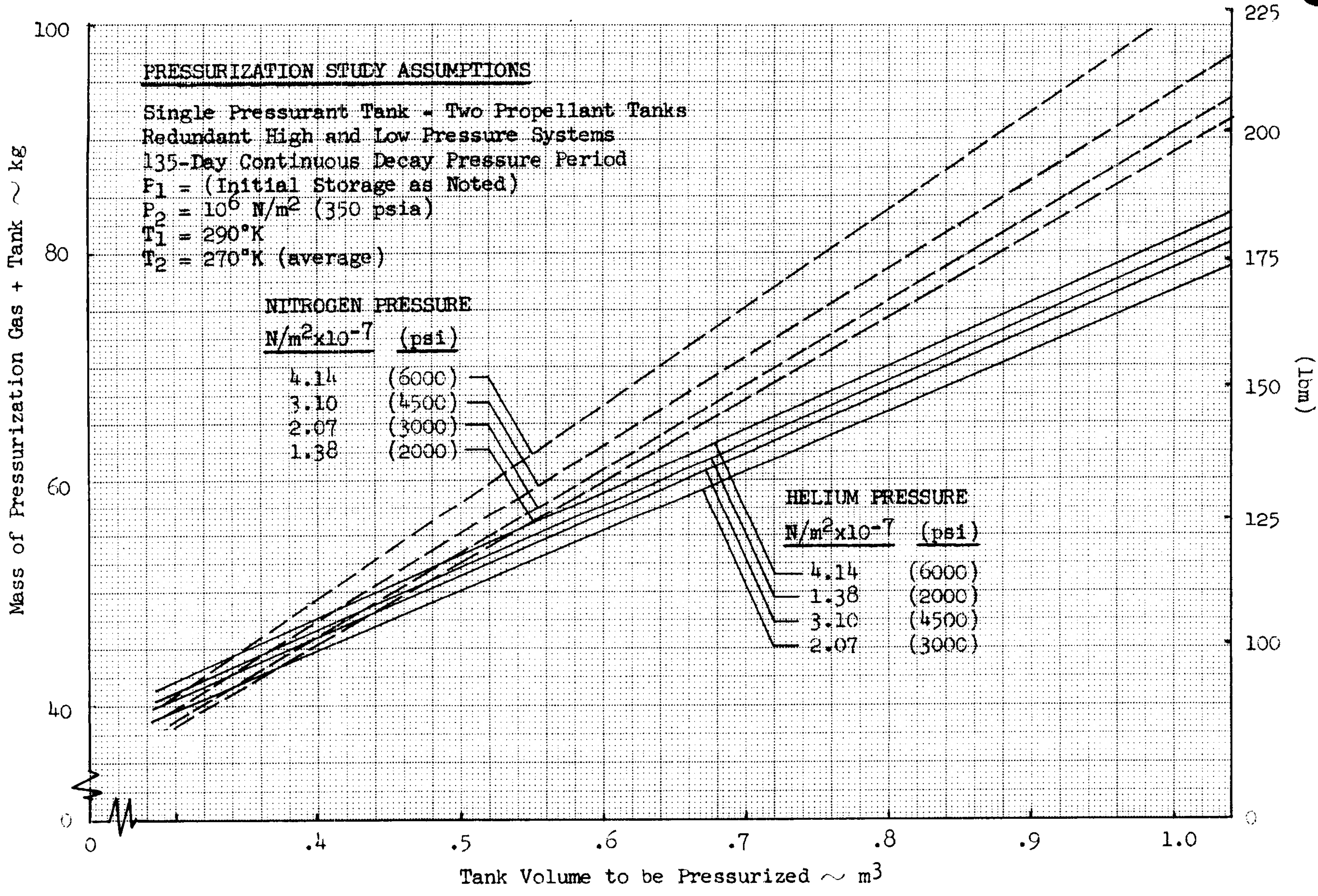

Figure 5.4-55: HELIUM VS NITROGEN PRESSURIZATION

precession propellant or stop/start spin propellant. If orientation is later desired for experiments or other purposes, gyros and attendant torquer control logic should be included if the orientation time exceeds 140 days.

Single engine thrust levels of 222 N (50 lb_f) and 667 N (150 lb_f), as used on the MORL vehicle, are more than adequate for the OLF. The 222 N engines are used for attitude and spin control in all three axes. Due to the long 25.3 meter moment arms on the OLF, the pitch and yaw engines may have to be sized lower for later experiment requirements. Four 667 N engines are placed near the hub to provide translation maneuvers. One pair is on either side of the OLV docking port, with their thrust axis pointed 15° away from the OLV centerline to advoid exhaust impingement. Location at the hub facilitates the separation and other maneuvers of the OLF when in the OLO operations. Thrust misalignment due to center-of-gravity offset is countered by the small engines, each of which provides over 5500 N-m of torque. Either two or all four of the high thrust engines can be used for maneuvers, thus providing some redundancy in these engines as installed. The low thrust engines are clustered in two locations at each end, as well as at the hub for roll control. Figure 5.4-56 shows the location of the nozzles. Redundancy is provided in the control circuits, the nozzles, and propellant feed systems to assure operation during critical docking or OLV launch periods.

The selected propellants are to be the same as those used for the OLV. At present these are N_2O_4 and UDMH. This requirement presents a compilication for the OLF design due to the toxity of the nitrogen tetroxide. The tanks must be located outside of normal crew areas. In addition, the N_2O_4 and UDMH tanks should be separated to lower the possibility of fire. Fire with these propellants can be extinguished by water however, and explosion is not a probable hazard. The MORL preliminary design considers the use of IRFNA and UDMH due to thermal limitations of N_2O_4. Although the OLF storage conditions can be controlled within the range desired, a problem may exist for the OLV storage. The freezing temperature of N_2O_4 can be lowered by addition of nitric oxide. In any event, in keeping with the philosophy of compatability with the OLV, the propellants and pressurants used on the OLF will be the same as used on the initial OLV.

As a result of the technical studies, helium pressurant in replaceable helium bottles is recommended for the OLF. For the OLF 90-day sustaining modes, the tanks which are located at each MORL and the hub, are about 18 cm in diameter. For the initial launch and prior to subsequent OLO cycles, two additional 105 cm diameter tanks must be placed in the OLF hub area.

The small engines are clustered in one replaceable module at each of the six OLF locations. This allows simple and rapid replacement of an entire unit, which can later be repaired by replacement of the faulty injector, valve, sensor, etc. The replaceable module concept is desired since extravehicular activity is required to work on the units and, even though the redundant unit is operable, it cannot be used while an astronaut is at the nozzle location. Thus the replaceable module concept allows a minimum of extravehicular activity and a minimum of attitude control "down" time. Leakage at the valves and detection thereof is the primary development problem for the reaction control engines.

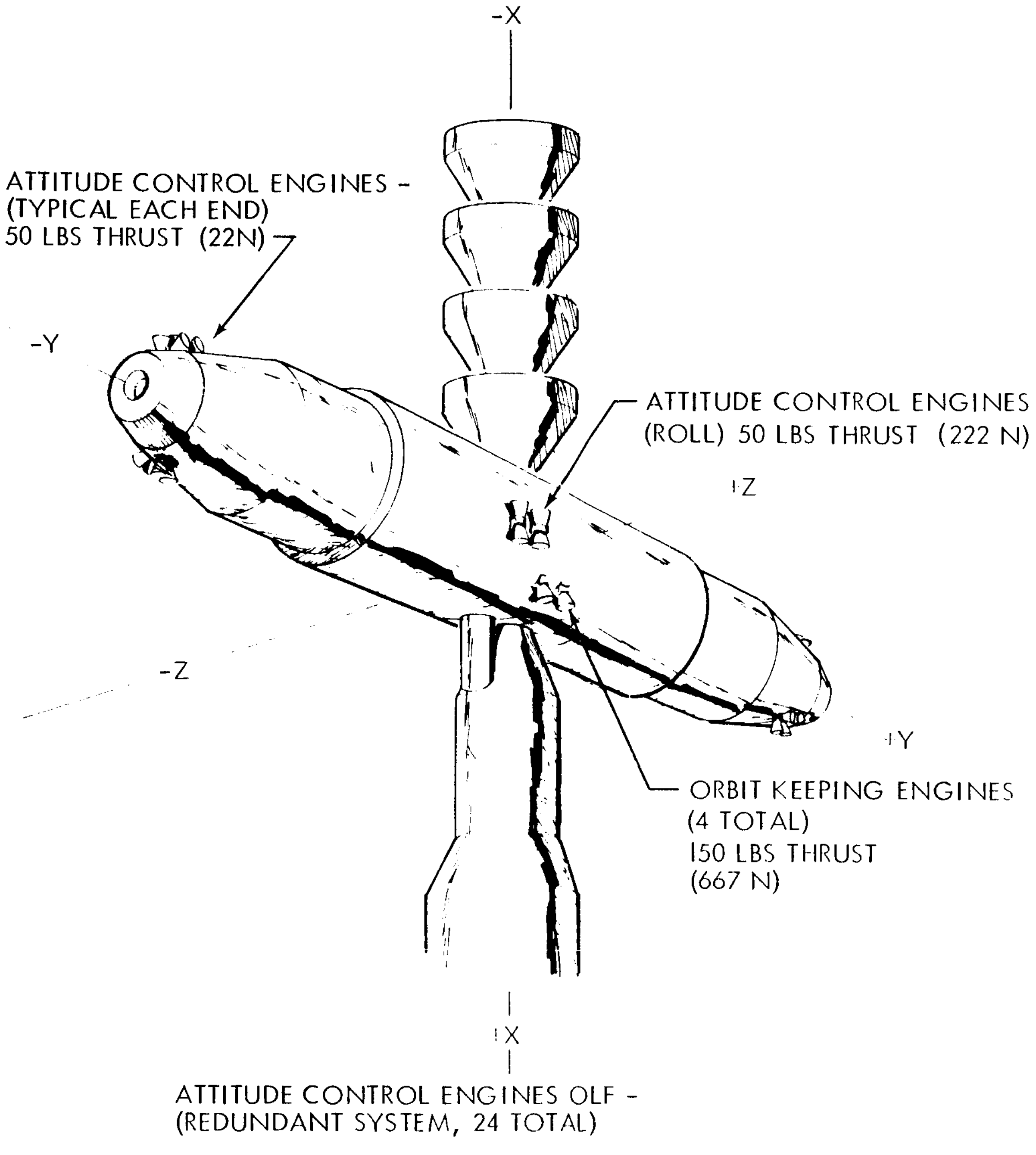

Figure 5.4-56: OLF REACTION CONTROL NOZZLE LOCATION

Operation of the system during OLO will be non-spinning and non-oriented except during docking, orbit upkeep, and separation and launch maneuvers. Orbit upkeep will be at selected intervals during the OLO cycle. Docking assist reserves will provide about 3 m/sec reserve for an average of all of the mode assemblies (or about 0.3 m/sec for each mode). A significant amount of propellant is allocated for orbital support equipment usage, including astronaut maneuvering unit (AMU) backpack reserves. Propellant for orbital support equipment can only be roughly estimated, however it has been established that usage rates can be quite high for simple operations. Use of 34 kg of propellant, per month, in a 180 kg remote maneuvering unit (RMU) is assumed. Figure 5.4-57 shows propellant usage during the OLO cycle. For the initial launch, propellants for the OLO cycle plus 45 days reserve must be provided.

The OLF sustaining mode, after OLV launch, is assumed to be a combination of spinning and non-spinning modes. Orbit upkeep and extra vehicular operations are integrated with the other non-spin operations to conserve spin stop/start propellant. One docking assist reserve of 3 m/sec capability is included. Propellant for OSE is estimated to be 56.7 kg every 30 days. Figure 5.4-58 shows 90-day OLF sustaining propellant usage for the partial spinning mode and, for comparison, for a continuous non-spinning (zero gravity) mode.

Propellant tank sizing for the OLF is based upon the maximum possible propellant storage requirements for initial OLV support. This approach assures that configuration interior volume is adequate and that interior arrangements will be less subject to change by re-sizing, change of manifolding, etc. Tanks in the OLF have capacity for the following OLF propellants. In addition, since the OLV uses the same propellants, the OLV servicing propellant requirements must be added to obtain the total OLF tankage.

	CAPACITY OLF PROPELLANT		
	MORL #1	MORL #2	HUB
(a) OLO Cycle Propellant (170 Days)	63.5	63.5	1224.7 kg
(b) 90-Day Partial Spinning Mode	513.0	513.0	408.0
Unscheduled extravehicular activity or Stop/Start Spin	167.8	167.8	---
45-Day Emergency Reserve (Non-Spin)	2.6	2.6	157.1
Usage Unbalance, Contingency and Residuals	50.0	50.0	150.0
Total Using Larger only of (a) or (b)	733.4	733.4	1531.8 kg

Propellant mixture ratio to provide equal volume tankage for N_2O_4 and UDMH is 1.81:1, which also yields an almost optimum specific impulse for this combination. Engine chamber pressure is 3.45×10^5 N/m^2 (50 psia) and propellant

OCCURRENCE	DAY	ATTITUDE OPERATION			ATTITUDE HOLD			PROPULSIVE MANEUVER			TOTAL MASS (kg)
		DOCKING (kg)	UPKEEP (kg)	OTHER (kg)	DOCKING (kg)	UPKEEP (kg)	OTHER (kg)	DOCKING ① (kg)	UPKEEP (kg)	OTHER ② (kg)	
OLF + 1 APOLLO	0									6.5	6.5
DOCK OLV	30	3.6	3.6		.4	.4		11.8	40.4	13.0	73.2
	60		6.4			.9			57.6		64.9
DOCK LSV	90	6.4	6.4		.5	.9		24.0	57.6	26.1	121.9
DOCK LOX 1	92				.5			24.9		13.0	44.9
DOCK LOX 2	99	6.7	6.7		.5	.7		34.5	18.1	13.0	80.2
DOCK LOX 3	100	6.5			.7			47.2		13.0	67.4
	130		8.1			2.2			69.9	13.0	93.2
DOCK LOX 4	158	8.1	8.1		.9	2.1		57.6	67.1	13.0	156.9
DOCK LSV	159	11.0			1.2			69.4		26.1	107.7
DOCK SII	168	11.0			1.2			70.8		26.6	109.6
TFR. LOX	169		12.9			.8			38.1	26.1	77.9
SEP. OLV	170			25.2			4.1			266.3	295.6
OLV LAUNCH	170			5.0			1.0				19.0
SEP. TANKERS	170			5.0			.5			25.9	31.4
TOTAL OLO USAGE		(59.8)	(52.2)	(35.2)	(5.9)	(8.0)	(5.6)	(340.2)	(348.8)	(494.6)	(1359.3)

① Maximum usage of docking assist reserve

② Estimated OSE usage + 226.8 kg for separation maneuver

Figure 5.4-57: PROPELLANT USAGE - OLO CYCLE

OCCURRENCE	DAY	ATTITUDE ORIENTATION			ATTITUDE HOLD			PROPULSIVE MANEUVER			TOTAL MASS (kg)
		DOCKING (kg)	UPKEEP (kg)	SPIN-CONTROL (kg)	DOCKING (kg)	UPKEEP (kg)	SPIN RATE (kg)	DOCKING (kg)	UPKEEP (kg)	OSE (kg)	
OLF SUSTAINING - PARTIAL SPINNING MODE ③											
LSV DEPARTURE	170	3.6		167.8	.4						171.8
	200		3.6	335.6		.4	22.7		43.5 ①	56.7	462.5
	230		3.6	335.6		.4			43.5	56.7	439.8
LSV DOCK	260	3.6	3.6	167.8	.4	.4	11.3	72.6	43.5	56.7	359.9
TOTAL SPINNING ②		(7.2)	(10.8)	(1006.8)	(.8)	(1.2)	(34.0)	(72.6)	(130.5)	(170.1)	(1434.0)
OLF SUSTAINING - NON-SPINNING MODE											
LSV DEPARTURE	170	3.6			.4						4.0
	200		3.6			.4			43.5	56.7	104.2
	230		3.6			.4			43.5	56.7	104.2
LSV DOCK	260	3.6	3.6		.4	.4		72.6	43.5	56.7	180.8
TOTAL NON-SPINNING ②		(7.2)	(10.8)		(.8)	(1.2)		(72.6)	(130.5)	(170.1)	(393.2)

① Orbit upkeep propellant for high solar flux periods (1979-1980).
② Required propellant only - neglects unscheduled maneuvers and adds start/stop spin propellant.
③ Partial Spinning Mode - assumes spinning one-half time only, for full-time spinning add 335.6 kg unscheduled stop/start spin and 34.0 kg spin up-rate propellant.

Figure 5.4-58: 90 DAY OLF PROPELLANT USAGE storage tank pressure is 2.41 x 10^6 N/m^2 (350 psia). The high storage pressure is required for the hub tanks, which must allow for line and valve losses when supplying the OLV and S-II transtage through umbilical connections.

5.4.5 Environmental Control/Life Support Systems. - Early in the OLF study the MORL environmental control system utilized an oxygen system in which the expended oxygen supplies were replenished by the logistics supply system. More recently consideration has been given to the use of an oxygen regeneration system. The trades involved with these systems have been discussed, as well as the requirements and description of all the EC/LS systems.

5.4.5.1 Requirements. - The EC /LS System is required to maintain a livable environment in the OLF. The basic MORL system was used, with modifications to environmentally control the OLF. The hangar and experiment bay, the hub, and both MORLs must, therefore, be maintained by the system. Some modifications were required in the air distribution system and further investigation of the contaminats removal system is recommended. The biological contamination may be decreased due to a reduction in the average crew size; however, the increase in size of the structure and equipment will increase contamination through outgassing, vaporization of lubricants, etc. It is expected that a balance may be achieved without major modification to the MORL system, but an accurate determination cannot be made until the materials for exposed areas and equipment are identified and analyzed. The existing MORL contamination removal system was retained without modification pending further analysis.

The following functions are provided by the environmental control/life support system:

a. Atmosphere Control

    Atmosphere Supply

        Pressurization
        Leakage makeup
        Airlock operation
        Portable life support system
        Emergency repressurization

    Purification

        CO_2 Removal
        Trace contaminat removal

    Humidity control

    Oxygen regeneration

b. Thermal Control

    Pressurized environment

        Occupants

Equipment

Unpressurized environment

Equipment
Tankage

c. Water and Waste Management/Other

a.	Crew number	12 men
b.	Crew overload	50% for 15 days
c.	Boost load	5 g's
d.	Gravity mode	0-.37 g
e.	Electrical energy (OLF) 25% of electrical energy dissipated into OLF atmosphere 75% into heat transport system	11 kw (peak)
f.	Seal leakage/inch (average)	0.00045 kg (0.001 lb.) per day

g. ECS must be capable of rejecting maximum heat load in any random orientation with respect to Earth & Sum

h. Temperature & pressure

75 ± 5° F at 7 psia in MORLs, hub & elevator tubes

65 to 85 at 7 psia in hangar or experiment bay

65 to 85 at 3.5 psia in hangar or experiment bay

i. Oxygen regeneration system power demand 3525 watts

j. Metabolic parameters (per man day)

Oxygen consumption	0.954 kg (2.10 lb.)
Carbon dioxide output	1.02 kg (2.25 lb.)
Water created by metabolic process	0.36 kg (0.79 lb.)
Heat output	10,850 Btu
Water consumption	2.80 kg (6.17 lb.)

Perspiration & respiration	1.26 kg (2.78 lb.)
Urine output	1.85 kg (4.07 lb.)
Feces output	0.15 kg (0.34 lb.)
Wash Water	1.36 kg (3.00 lb.)

k. Atmosphere Parameters

Temperature	75% ± 5° F
Total pressure	7 ± 0.2 psia
Oxygen pressure	3.5 psia nom.
Carbon dioxide partial pressure	4 min hg.
Relative humidity	30-60%

Ventilation - Seven volume changes per hour

5.4.5.2 Technical Studies. - Since the MORL EC/LS systems were used essentially as provided on the MORL for the OLF, few technical trade studies were made on these systems. Two areas were considered however, one on the use of oxygen regeneration versus oxygen resupply and the other on use of a trampoline versus a centrifuge for physiological gravitational conditioning for the crew.

In considering oxygen regeneration, a study was conducted to compare the use of the Tapco-Bosch oxygen regeneration system with the expendable oxygen system originally planned for the MORL modules, in which expended oxygen is resupplied by logistics launches. Figure 5.4-59 shows the mass saving which can be expected with the regeneration system. A savings is realized even at initial launch, since the equipment mass of approximately 910 kg (2000 lb.) added to the OLF atmosphere supply, purification, and electrical power systems required by the oxygen regeneration system is less than the 1360 kg (3000 lb.) of additional liquid oxygen needed at initial launch by the expendable oxygen system. A total potential mass saving of some 19,500 kg (43,000 lb.) may be expected during the five year period.

Based upon these results, as well as the fact that current thinking on the MORL program leans toward oxygen regeneration, the decision was made to incorporate the Tapco-Bosch oxygen regeneration system on the OLF.

The equipment added to each MORL module to incorporate the oxygen regeneration system are listed as follows:

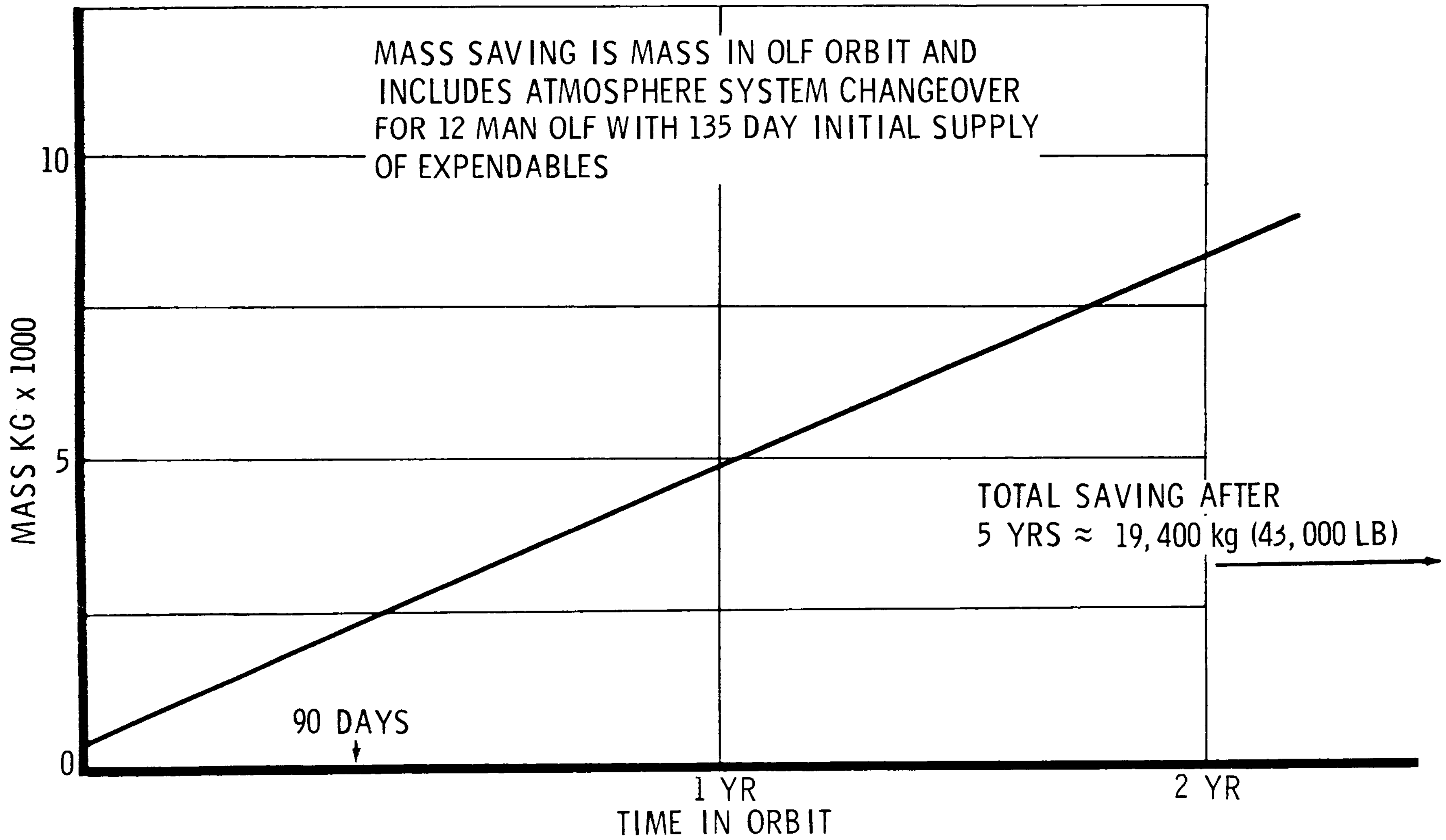

Figure 5.4-59: MASS SAVINGS WITH OXYGEN REGENERATION

Component	Mass kg	Mass lb.	Volume M^3	Volume ft^3
CO_2 Reduction Reactor	36.0	80	0.033	1.2
Carbon Filters	5.4	12	0.014	0.5
Compressor (blower)	2.3	5	0.003	0.1
Condenser Separator	1.4	3	0.002	0.05
Electrolysis Unit	16.0	35	0.004	0.15
Instrumentation & Controls	2.3	5	---	--
Heat Exchanger	3.6	8	0.022	0.75
Total	67 kg	148 lb	0.078 M^3	2.75 ft^3

An additional 20 kg (45 lb.) should be added for the heat rejection loop penalty. The expendable weights required for the Bosch systems are about 0.10 kg (0.21 lb) per day for catalyst, 0.170 kg (0.375 lb.) per day for carbon filtration storage, and 1.12 kg (2.46 lb.) per day of makeup water. Of this make-up water 0.88 kg (1.92 lb.) was assumed to be supplied from the water reclamation system and the remainder was assumed to come from storage. Thus, the water storage penalty becomes 0.24 kg (0.54 lb) per day. Therefore, the total expendable weight becomes 0.51 kg (1.125 lb) per day for a 6-man system.

Consideration was given to the use of a trampoline for physiological gravitational conditioning of the crew instead of the centrifuges currently planned for the MORL. Boeing is currently conducting studies of such equipment. The trampoline is a relatively simple piece of equipment which consists of two spring mounted webs some eight or ten feet apart between which a platform or cart mounted on rails is free to travel. A crewman is secured to the cart and then, by his own power, bounces between the two webs, striking the one with his head and the other with his feet. Results to date indicate that the overall performance may be superior to the centrifuge. Obvious mechanical advantages of the trampoline are its simplicity, its light weight, and the small volume which it occupies. While the trampoline appears to offer definite advantages, the centrifuge was retained aboard the OLF primarily to hold the MORL module changes as low as possible. Completion of trampoline testing may demonstrate it to be attractive enough so that its application to the OLF MORL modules should again be considered for entry conditioning. A trampoline is included with crew support recreation equipment.

5.4.5.3 Recommended System. - To summarize, the MORL EC/LS systems and facilities are generally suitable and compatible with baseline OLF requirements. The OLF introduces additional pressurized, inhabited volume which may increase the contaminant control capacity requirements. No change is anticipated in the requirements for personal hygiene or sanitation over the basic MORL requirements. Provisions for crew working in the MORL structure should be adequate for the reduced and zero gravity environment. The balance of the OLF structure in the various assembly and work areas will require facilities for support and restraint to enable the crew to work effectively in reduced ambient gravity.

Figure 5.4-60 schematically illustrates the basic additions to the MORL's environmental control system required to provide for the central areas of the OLF. Each MORL, in addition to controlling its own environment, will be capable of providing pressurization and atmospheric purification for the entire hub and elevator tubes and the bay volume (experiment or hangar) directly adjacent to the MORL. Bottled oxygen and nitrogen will be utilized for MORL extensions (0.5 psi) and for the initial pressurization (3.5 psi) of the experiment and hangar bays, hub, and elevator tubes. Common ducting, with appropriate valving, is used between the two MORLs and the hub for final pressurization and control of the atmosphere of the hub compartments and elevator tubes. Following initial pressurization to 3.5 psi, the hub elevator terminal and tubes will be fully pressurized and maintained at 7.0 psi for "shirtsleeve" commuting between MORL modules and the hub. When it is found necessary to fully pressurize either the experiment or the hangar bay, one bay will be evacuated to provide pressurization for the other. This is accomplished by the transfer pumping system, after which the return vents of the pressurized bay are opened and circulation initiated. Atmospheric conditions of each compartment will be checked and monitored prior to and during their use to determine hazardous conditions of contamination, temperature, and pressure. Circulation and temperature control units are provided for each compartment. Umbilical life support connections are provided in each compartment of the OLF and utilize the MORLs for atmospheric supply and purification as shown.

The MORL environmental control system concept, utilizing oxygen regeneration, will be used because of its long-term economical advantages as shown in Figure 5.4-60. In the oxygen regeneration system desorbed CO_2 is delivered to a reduction system connected directly to the solid adsorption system. The heat source used will be the Isotope/Brayton power system. Based on the proposed Tapco-Bosch CO_2 reduction system, the environmental control system basic fixed weight for each MORL must be increased by approximately 200 lb and the radiator size increased by 230 square feet over a system not providing oxygen regeneration. Further details are noted in the following descriptions.

The environmental control/life support system is divided into ten major function areas. These are listed below together with a brief description showing the method of performing the subsystem functions.

1. Atmospheric Supply and Pressure Control. - Subcritical O_2 and N_2 storage is provided for metabolism and leakage. A 50/50 mixture of O_2 and N_2 is maintained at a compartment pressure of 7 psia. High pressure gaseous storage is used to provide one complete sanctuary and equipment room area repressurization in each MORL. A portable life support system provides a separate gaseous store for providing up to 90 man hours of extra vehicle activity.

2. Atmospheric Purification. - A redundant loop is provided for hangar or experiment bay conditioning with crossover capabilities with the laboratory loop for either open or closed loop operation. CO_2 removal is accomplished by solid adsorption regenerable means and trace gas is removed by a catalytic burner

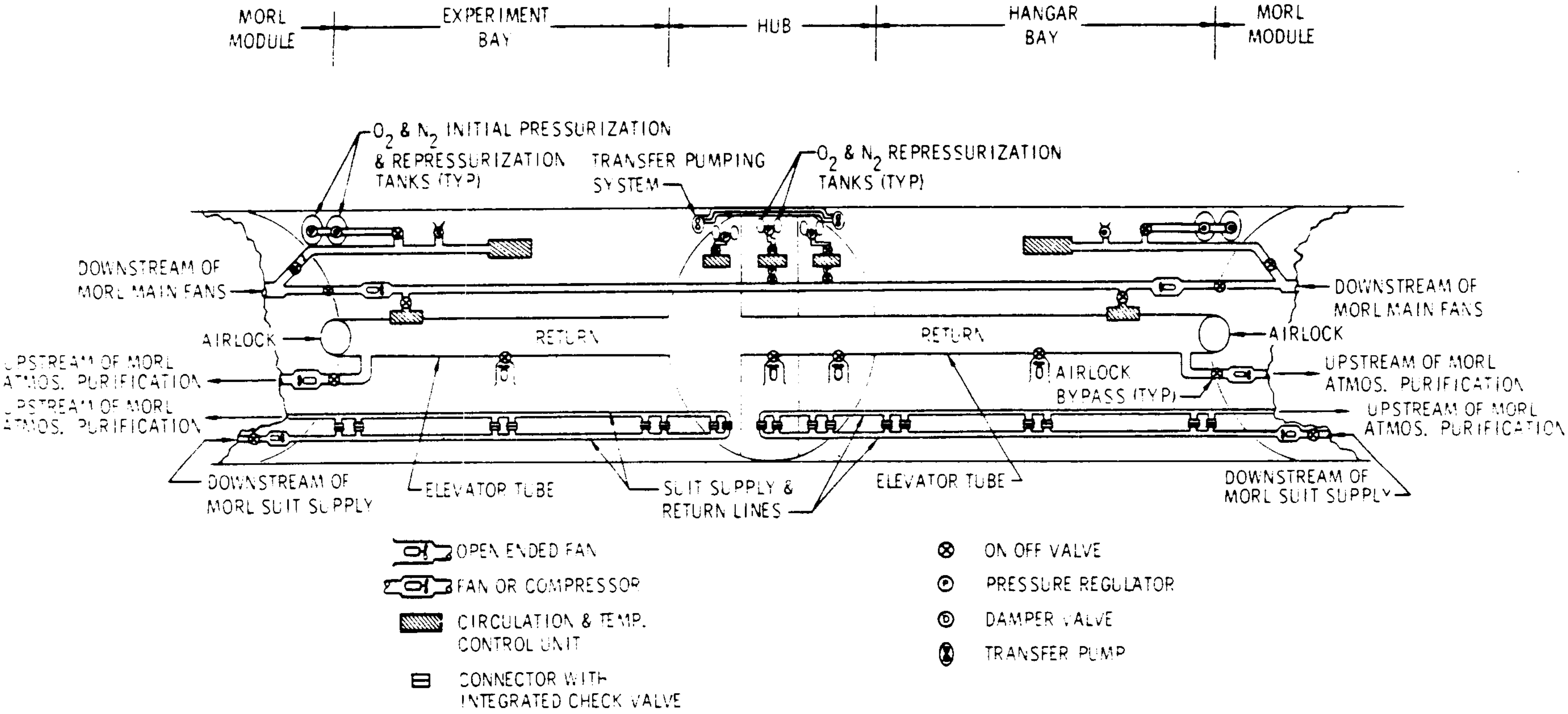

Figure 5.4-60: OLF ENVIRONMENTAL CONTROL

and charcoal bed. Humidity control is maintained by dew point control after a condensing heat exchanger.

3. Water Management. - Wash water and urine are reclaimed by an air evaproation process. The evaporators are located in the atmospheric purification and spacesuit conditioning loop. Both sources of water are evaporated into a common air stream and then condensed in the humidity control heat exchanger.

4. Waste Management. - Waste processing is provided by dehydration and vapor exhaustion to space. Two identical chambers are provided which alternate daily as storage and drying chambers. The cooled storage chamber retards bacteria growth and the heated chamber boils off the wasted water. After drying, the waste solids are removed in a chamber lining bag.

5. Habitable Areas Conditioning. - Ventilation and temperature control is maintained by a fan-heat exchanger. Particulate matter is filtered out and the fan forces air through a water cooled heat exchanger.

6. Cooling Circuit. - Waste heat is rejected to space by a radiator. Heat transfer is accomplished by exchange at the heat transport circuit interface. Temperature control is maintained by a bypass - regenerative heat exchanger. Radiator construction is integral with the OLF shell. It has redundant tubes for reliability. The total radiator area is $72.3m^2$ ($775\ ft^2$) for electrical power heat transfer. An additional $85.5M^2$ ($920\ ft^2$) is required at the hub for radioisotope waste heat rejection.

7. Heating Circuit. - Heat is supplied to the EC/LS system from the power system PU-238 heat source. The heat is transferred to the heat transport system by means of an interface heat exchanger and a working fluid. Under no load, the isotope heat is rejected to space by the radiator. Working fluid temperature is maintained by regulating the flow of fluid through the isotope heat exchanger.

8. Heat Transport Cirucit. - Heating and cooling for all functions are provided by this circuit. Temperature control is maintained by the heating and cooling circuit interface heat exchangers. Coolant is needed for atmosphere purification, conditioning, water management, waste management, and pump-down subsystems. Heating is required for desorption of silica gel beds, water evaporators, hot water supply, bacterial control, and waste management.

9. Pump-Down. - This system performs the functions of gas removal, compression intercooling, and storage of the gases within the hangar/test area and for airlock gas evaculation. The maximum load upon the MORL pump-down subsystem is the evaculation of 69 pounds of atmosphere from a 7 psia source to a pressure of 105 psia storage in a period of 6 hours. The hangar/test area tank contains 124 cubic feet. Airlock evacuation to the cabin requires that 3.37 pounds be pumped in a period of 9 minutes.

10. Oxygen Regeneration. - The Tapco-Bosch system schematic is shown in Figure 5.4-61 and the Power System integration in Figure 5.4-62. The Tapco reactor is a stainless steel cylindrical shell which houses iron disk catalyst plates about 1/8" in thickness and about 1/2" apart. The disk assembly revolves at one rpm and the carbon is removed from the disks by a set of scraper prongs,

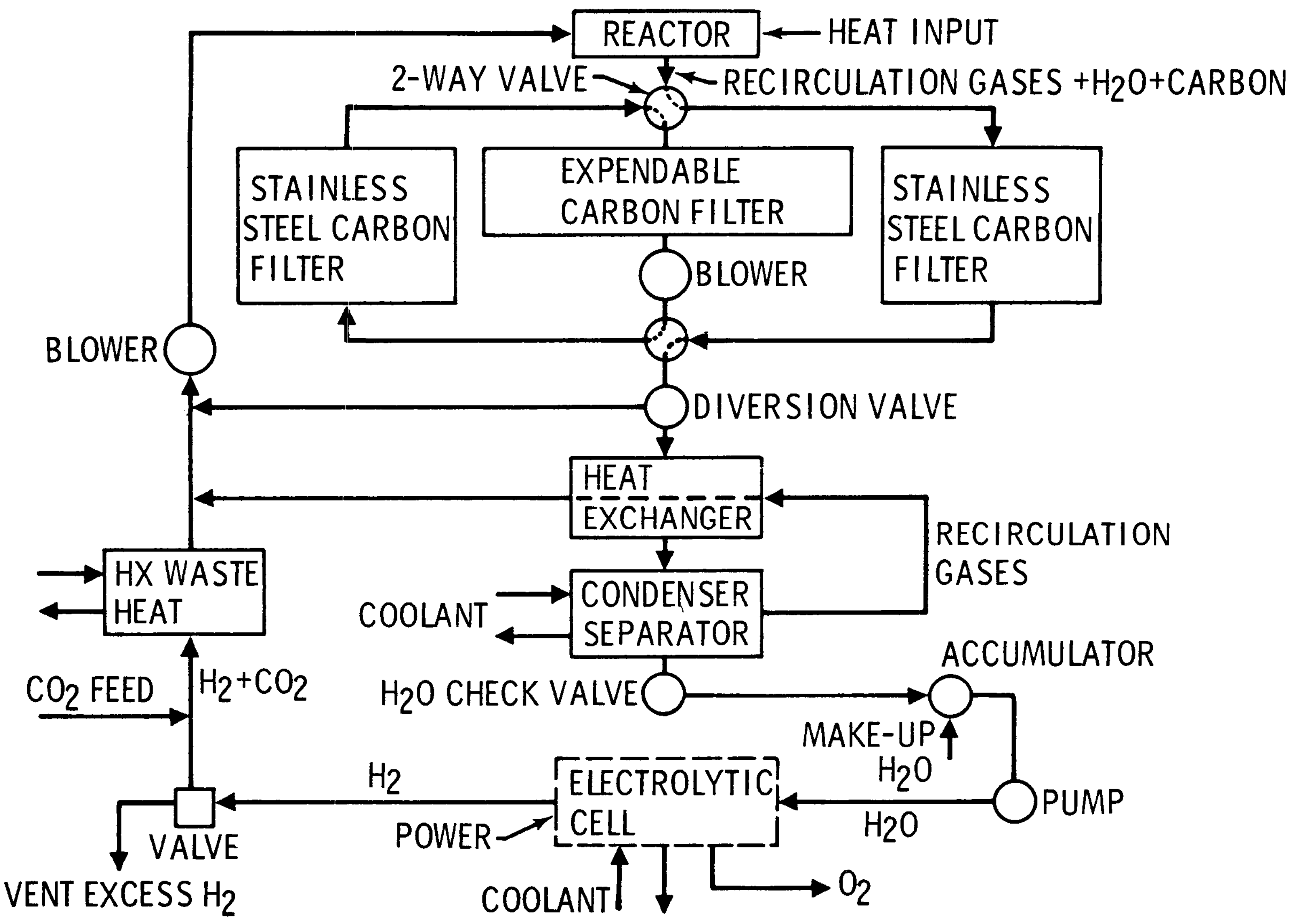

Figure 5.4-61: TAPCO BOTCH CO_2 REDUCTION SYSTEM

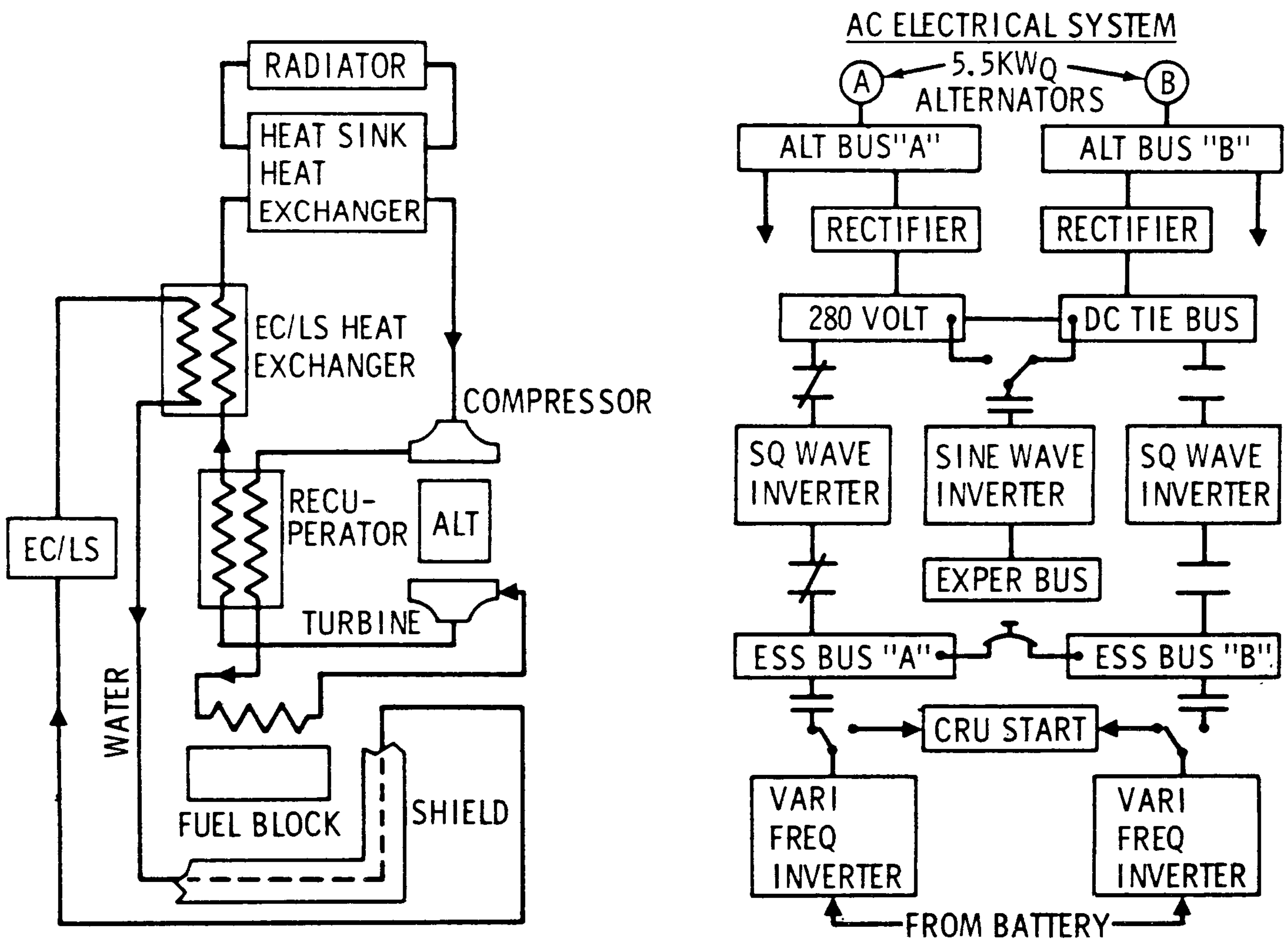

Figure 5.4-62: ISOTOPE-BRAYTON CYCLE POWER SYSTEM

extending from the side of the cylinder. The reactor is fed CO_2, H_2, and hot recycle gases. An electrical heater in the reactor provides additional heat to the enetering gases to maintain a reaction temperature of 1200°F. From the center inlet manifold of the reactor chamber, the gases flow radially outward and carbon is deposited on the catalyst disks. The gas flow through the reactor picks up loosened carbon and transports it out of the reactor. The recycle gases plus carbon particles, then pass to a stainless steel filter. From the on-line stainless steel filter, the reaction products flow through a diversion valve to either the regenerative heat exchanger or the recycle blower. Gas would be routed to the blower only if carbon transported by the gas flow through the reactor to the filters was not adequate.

The recycle gases passing from the diversion valve through the heat exchanger are cooled and then passed to the condenser separator. There they are cooled below the dew point of the contained water vapor by coolant from the heat rejection system. The condensed water vapor is separated from the non-condensable recycle gases by the action of a porous, metallic, capillary plate. The separated water passes to the water electrolysis system and the cool recycle gases reenter the heat exchanger to cool the hot recycle gases from the reactor. From the heat exchanger, the recycle gasis mix with the incoming CO_2 and H_2 and then are passed back to the reactor by means of the blower. Waste heat may be used to heat the incoming CO_2 and H_2 in order to conserve electrical heater power which would otherwise be required.

System Checkout

(a) Prelaunch and Unmanned Orbit Phase. - Operational checkout of the active system components will take place during the pre-launch phase. The system is non-operational during the boost phase and is activated during the unmanned orbit phase by remote means. The heat provided by the isotope/Brayton cycle during the launch phase was absorbed by a disposable system using water as a coolant. After achieving the desired orbit, habitability requirements can be ascertained by measuring storage tank quantities, total pressure, oxygen partial pressure, temperature, and an indication of contaminants as would be obtained from the gas analyzer telemetry output.

Operation of the CO_2 removal, catalytic burner, and moisture removal and oxygen regeneration systems is very difficult to assess. A functional check on these systems during the unmanned automatic checkout phase can be accomplished by the inclusion of CO_2, CO, CH_4, and water vapor, in the launch atmosphere.

The heat transport and air recirculation loops are difficult to analyze for failure of heat rejection components. Some specific failure conditions can be reduced by the combination of failures that may occur, but detailed information is not available regarding the performance of these loops.

(b) Manned Phase. - A summary of crew tasks broken down into daily, weekly, monthly, and quarterly tasks as a means of describing the operation of the system may be found in Paragraph 4.2. During normal operations, there is no intention of shutting down the system. However, during emergency conditions several of the various subsystems can be isolated from the main system by control valves.

Failure Mode Analysis. - The EC/LS system is designed to be maintainable in orbit by the crew with sufficient spares on hand as required. In addition to the fact that all systems will normally be reparable, there are many emergency modes of operation which give the crew additional time and flexibility so that the chances of crew abort, due to failure of the EC/LS is extremely remote. The following analysis indicates the major emergency operations in the event of specific possibilities failures; specific remedial action for failures that have occurred are shown in Paragraph 4.2, Maintenance Analysis.

1. Failure of Oxygen Regeneration System
   - Gaseous reserves could be used for breathing; 37 days supply would be available.
   - The oxygen in the sanctuary itself provides 82 hours supply.
2. Failure of the Pressure Control System
   - Warning is provided when pressure control goes out of tolerance: $PO_2 < 3.4$ psia.
   - Another warning is provided when $PO_2 = 2.4$ psi; it would take 82 hours for this to occur.
   - Manual pressure control is provided
   - The crew can put on space suits.
3. Meteroid Puncture
   - A warning is provided initially of puncture.
   - A second warning indicates when the critical PO_2 level (2.4 psi) has been reached.
   - The pressure control system will go to maximum flow.
   - With a 1/2-inch diameter hole, it would take 44 minutes for PO_2 to reach the critical 2.4 psi, assuming that no makeup is available from the normal supply.
   - The crew can put on space suits.
   - Large punctures will be visible and could be manually plugged until emergency measures are taken.
   - The gaseous reserves provide one complete laboratory recompression.
4. Failure of the Carbon Dioxide Removal System
   - The rate of PCO_2 buildup will be about 1/2 mm/hour. Therefore, it

will take 7.3 hours to reach 7.5 mm and 32.5 hours to reach 20 mm.

- With two molecular sieve beds it would be possible to operate indefinitely with only one bed, allowing the PCO_2 to build up during desorbtion. The actual average cabin PCO_2 would be less than 10 mm in this case.
- The crew could go to a 3.5 psi, 100% oxygen atmosphere and maintain cabin PCO_2 at 20 mm by leaking at a rate of 1.5 lb/man-hour. At this rate the gaseous reserves would last more than two days.

5. Failure of the Water Management Subsystem

- If the wash water and atmospheric condensate purification unit fails, this water could be processed through the urine pruification unit at a higher power cost.
- If the urine purification unit fails in such a manner that the water is contaminated by bacteria, the backup bacteria kill capability can be used.
- With the reserves provided, the backup purification would supply sufficient drinking water to maintain a closed cycle, assuming that washing is discontinued.
- If the water supply becomes contaminated by a buildup of a trace contaminant that is not removed by the urine purification unit, the reserve supply would last 9.5 days.

6. Failure of the Catalytic Burner

- Assuming normal generation rates of known contaminants, it would take weeks for the levels to reach intolerable or dangerous levels.
- At this point the crew could go on a 3.5 psi 100% oxygen atmosphere and manually bleed air to space to maintain a safe level of the contaminant. The required leak rate would be a function of the rate of contaminant buildup which normally would be very slow. The gaseous reserve oxygen should last until a resupply is made.

7. Failure of the Cooling Circuit

- The liquid pumps will be redundant with automatic switching capability.
- A reserve liquid coolant supply is provided in case the supply is lost.
- All external liquid lines are redundant including the radiator.

8. Failure of the Heating Circuit

- A reserve liquid coolant supply is provided in case the supply is lost.
- All external liquid lines are redundant.
- The radioisotope heat source cannot fail.
- The radioisotope heat exchanger is designed so that if the liquid circulation is stopped, it will maintain its own heat balance without degradation.
- The heating functions can be accomplished with electrical backup heaters provided.

EC/LS System Data Displays. - The data for displays shall be provided by the following instrumentation for the various subsystems considered during the prelaunch, unmanned and manned orbiting phase:

Atmospheric Supply

1. Liquid supply tank quantity
2. Liquid supply tank pressure
3. Gaseous supply tank pressure
4. Nitrogen inflow
5. Laboratory total pressure
6. Laboratory oxygen partial pressure

Atmospheric Purification

1. Oxygen partial pressure
2. CO_2 partial pressure
3. Trace contaminant partial pressures
4. Condensing heat exchanger outlet temperature
5. Subsystem air flows
6. Catalytic burner temperature
7. Vacuum pump pressure
8. Humidity, zeolite bed inlet

9. Water separator pump differential pressure

Water Management

1. Evaporator exit temperatures
2. Heater exit temperature
3. Potable water tank temperatures
4. Potable water tank quantity
5. Water separator pump exit water conductivity
6. Urine process and storage tanks quantities
7. Wash water process and storage tank quantities
8. Complexing agent tank quantities

Waste Management

Dryer internal temperature

Habitable Area Conditioning

1. Gas flow rate
2. Flow control sensor for fan switchover

Cooling Circuit

1. Fluid pump differential pressure
2. Fluid loop total pressure
3. Temperature into interface heat exchanger
4. Accumulator quantity

Heating Circuit

1. Fluid Pressure
2. Pump differential pressure
3. Interface heat exchanger inlet temperature (XF 1050 Side)
4. Accumulator Fluid Quantity

Heat Transport

1. Fluid pressure
2. Pressure differential across pump
3. Temperature at cooling circuit heat exchanger outlet
4. Fluid quantity in accumulator

Pump Down

1. Hangar/Test area total pressure
2. Storage tank pressure
3. Storage tank supply temperature
4. Compressor speed

Oxygen Regeneration (CO_2 Reduction Unit)

1. Reactor Temperature High
2. H_2 or CO_2 pressure low
3. Temperature warning
4. Pressure warning
5. Catalyst plates stopped
6. Excess current (400 cps) pwr "off"
7. Excess current 28 VDC, power "off"
8. Power on/off

In conclusion, it has been found that MORL EC/LS systems are well adapted to the OLF requirements; the increase in capacity and additional facilities, where required, have been noted in the text of the study and are a function of the specific OLF required. Basic MORL systems may be adapted with a minimum of modification.

5.4.6 Crew Support. - The crew support provisions include personal equipment, food handling and preparation, recreational facilities, hygiene provisions, medical equipment, and all miscellaneous items required for crew comfort and OLF habitability. Life support metabolic requirements, atmosphere supply, waste management, and water recovery requirements are described with the environmental control/life support system in paragraph 5.4.5. Life support quantities of oxygen, water, food, etc., are included with the expendables in paragraph 4.4.5.

Clothing and similar equipment is divided between that carried with each crewman and that stored on-board the OLF itself at launch. The equipment include in the OLF at launch is based upon the requirement to support a total of 12 men for a stay of 180 days, with 90 day normal resupply and 135 day emergency resupply period. The ample accommodations and emergency resupply period provisions are capable of handling temperary crew "overloads" to 18 men for periods up to 15 days on an emergency basis.

5.4.6.1 Crew Support Requirements. - Crew support requirements include both personal equipment and general crew equipment.

Personal Equipment. - For purposes of this report, personal equipment will be considered as that sized for a particular crew member or items of a private nature. Personal equipment will accompany each astronaut to and from the OLF in the logistics supply vehicle. Typical items of personal equipment are:

Clothing

Momentos

Personal medications

Personal hygienic items

Religious articles

Personal preference recreation

Pressure suit (if individually sized)

General Equipment. - The bulk of crew support equipment is non-personal or general in nature. The philosophy of the OLF design is that clothing, medication, recreational facilities and similar equipment be useable by a large percentage of the possible crewmen. General crew facilities are required for:

Sleeping and privacy

Lounging and eating

Working (interior)

Working (exterior)

Recreation

Exercise

Food, storage, and preparation

Medical and dental

Personal hygiene

Clothing and pressure suits

Housekeeping and laundry

Locomotion (zero gravity)

Restraint (zero gravity)

Radiation protection

Fire protection

Extravehicular activity

5.4.6.2 Crew Support Technical Studies. - Life support experiments at Boeing, including the recent MESA program, have shown that although may problems of long period confinement in a semi-closed environment can be anticipated, many more develop from unexpected actions and reactions. Results of these experiments, which are continuing in support of other programs, are incorporated in the recommended crew support items.

5.4.6.2.1 The MESA Program. - The MESA (Manned Environmental System Assessment) was conducted at Boeing in 1963 and 1964. It consisted of a closed ecological system test with five crewmen under semi-isolated conditions for 30 days. The atmosphere was closed, with little leakage from a 70 cubic meter volume. The remainder of the system was completely closed except for the use of freeze dried food. Isolation was complete except for occasional contact with the outside test controllers. Oxygen generation was by controlled decomposition of sodium superoxide (NaO_2) with a lithium hydroxide backup system. Waste treatment was by aerobic culture which created a biologically activated sludge. Potable water was recovered from the waste system. A short summary of the information gained from the program and recommendations for future work is shown on Figure 5.4-63.

Of particular importance to the OLF design is the comfort and efficiency of the crew. Operations during the Orbital Launch Operations period require greater skills and alertness than typical orbital operations. Lists of the 30 day MESA II program annoyances to the 5 man test crew are shown in Figure 5.4-64. Food, noise, behavior of others, toilet facilities, and crowding head the list of "how much" and "how often" they bothered the test crew. The latter three annoyances may have been particular to a small test module. Food, boredom, and noise, along with dirt and smells, will be of primary concern to the OLF crew support design. The shorter MESA I test showed that trace contaminants of an annoying or sickening nature can outgas from many materials thought to be stable. The outstanding characteristic noted during MESA I and II was the increased olfactory sensitivity to odors as the tests progressed. Flatus, bad breath, and perspiration became very noticable offensive odors.

The MESA program pointed out that crewmen were anxious to take their assigned turns at an isolated work station. Two reasons were given for this: that of semi-privacy and that of being out of the path of personnel traffic. At various times it appeared to crewmen that others were not being considerate enough in their transit and other movements about the test module. This factor must be taken

THE MESA* PROGRAM RESULTS

A. Proved the concept of life support in a sealed atmosphere.

B. Toxicological problems in a sealed atmosphere are greater than expected and integration testing is the only way to make final judgment.

C. Bacterial contamination in space can occur and system resterilization must be available.

D. Humidity underflow is an effective contaminant remover, but is a questionable ready source of potable water.

E. Need standards of toxicological limits and efficient quick methods for measuring.

F. Personal hygiene equipment can be source of contaminants both toxic and bacteria. Must maintain strict control on all designs.

G. Need standards for water acceptability and the necessary monitoring equipment.

H. Need standards for bacteria limits and the necessary monitoring equipment.

I. Hopcalite burner and full system filtration (similar to CBR) is very effective in controlling trace gases and bacteria.

J. Proved that chemical (NaO_2) is a very effective and mechanically simple system for atmospheric control. The simplicity of this concept should be weighed versus reliability of other concepts during trade studies. Further trades should be made and at a minimum consideration given to use of this system for emergency back-up, personnel short term systems, and the like.

K. Established the control variables for a biological aerobic waste system. Consideration of this concept must be coupled with water system. To ensure an efficient waste-water recovery system, additional development is required in the separation of solids prior to water treatment.

* Manned Environmental System Assessment.

Figure 5.4-63: MESA INFORMATION GAINED AND RECOMMENDATIONS

MEAN RANKS ASSIGNED TO THE ITEMS ON THE MODIFIED NRL SCALE TO INDICATE "HOW MUCH" OR "HOW OFTEN" THEY BOTHERED THE TEST CREW

Scale Item	How Much Rank	How Often Rank
Food	1	1
Behavior of Others	2	4
Noise	3	2
Toilet Facilities	4	3
Crowding of the Chamber	5	5
Worries About the Outside	6	10
Boredom	7	6
Lack of Water for Washing	8	9
Trouble Sleeping	9	11
Dirt	10	8
Lack of Privacy	11	7
Bunks	12	14
Physical Symptoms	13	16
Not Able to Concentrate	14	15
Smells	15	12
Lack of Exercise	16	13
Lack of Organization	17	17
Poor Leadership	18	18
Temperature and Humidity	19	20
Lights While Sleeping	20	19
Lights While Awake	21	21

FIGURE 5.4-64

INCONVENIENCES OR ANNOYANCES TO CREW

into account in the layout and interior arrangement of the OLF.

5.4.6.2.2 Zero-Gravity Studies. - Particularly informative are the mobility and locomotion studies being conducted at Boeing. Neutral buoyancy is provided in an underwater test cell. As an example, these studies have indicated that although it would be desirable to provide a single-size pressure space suit to accomodate any of the OLF crew members, a largely oversized suit limits mobility to the extent that certain emergency functions would take too much time or even be impossible without additional assistance. Emergency suits are desired in at least three OLF locations (MORL's and hub), hence a compromise between single all-purpose suits and individually sized suits must be made. Various tools and restraint devices are being developed as a result of the neutral buoyancy tests.

5.4.6.2.3 Re-entry Conditioning. - Studies of physiological conditioning for atmospheric entry deceleration after prolonged periods of weightlessness have indicated the desirability of using a guided-path trampoline. Tests are being conducted at Boeing on subjects that have been in a state of simulated prolonged weightlessness for days. Recovery by centrifuge has not been fully satisfactory, with many subjects "blacking out" during the tests. Trampoline tests however have been fairly successful, both in the guided and unguided-path modes. The trampoline conditions cardiovascular and other organs in a shorter time than "conventional" centrifuges. The guided path is preferred since it requires less concentration on the part of the subject.

Although the MORL centrifuges have been retained in the OLF, it is possible that they can be completely removed by full use of the trampolines. Needless to say, the trampolines provide exercise as well as conditioning, and most subjects have preferred the trampoline activity over that of more passive physical conditioners.

5.4.6.3 Crew Support Recommended System. - The human factors programs in progress at Boeing and elsewhere are indicating that the mental and physical well being of the crew should be a strong criteria for selection of crew support items-even at the expense of mass, power, or volume. In the case of the OLF, this recommendation can be adhered to without adding an unreasonable penalty to the facility or its mission. In some cases, notably that of re-entry conditioning, recent work shows that considerable mass saving may be possible with newer methods.

5.4.6.3.1 Personal Equipment (Carried with Crewman). - The equipment accompanying each crewman is only a small portion of the total shuttle vehicle mass. The individually sized clothing is lightweight and can be provided in quantity. The clothing type and material is described later in this paragraph. A personal kit allowance will be provided for watch, comb, hairbrush, toothbrushes, shave cream, deodorant, or personal medicine. A personal effects kit allowance will be made for family pictures, religious articles, mementos, and other items of a private nature. In addition, since leisure activity and avocation tastes vary, an adequate personal recreation allowances will be provided.

Pressure suits must be sized for each man, until a more universal suit is developed that can meet the OLF mobility requirements. The suits, modified Apollo types, are described under Clothing later in this section.

5.4.6.3.2 Sleeping and Privacy. - Sleeping facilities will include bunks, sleeping bags, and personal equipment storage provisions. Although all crew members will not be sleeping at one time, a separate facility is provided for each, for a total of twelve on the OLF. Each sleeping chamber will be physically and accoustically isolated from the remainder of the living area. The reduction of noise level for privacy and sleeping is one of the more important criteria for personal comfort over long duration. Curtains are not considered acceptable, due to excessive weight for proper accoustical performance, and also, lack of a sense of complete privacy.

Each bunk can be converted to a desk or a lounging day bed. This allows private hobby activity or reading. The need for privacy was an overwhelming request by the crew members of the MESA program. Close confinement, even with sleeping privacy, resulted in an overemphasized awareness of the personality traits and shortcomings of other crew members. Thus, the sleeping quarters should also be individualized private quarters.

For zero-gravity, bag enclosures will be used in drawers and shelves for personal items. Sleeping bags with washable liners are preferred, rather than blankets, since they are more amenable to zero-gravity restraint and comfort.

5.4.6.3.3 Lounging and Eating. - The central part of the living area will be a lounge area. Just as there is a requirement for privacy, there also exists a requirement for informal social contact. "Bull sessions", card games, and eating periods will provide a chance for the crew to socialize under non-working conditions. Since the living area is somewhat limited in space, large group activity will be accommodated in the experiment bay.

A permanent eating table is established in the living area. The method of drinking liquid food directly from bags or tubes will only be used under zero-gravity conditions. Even then, an attempt will be made to provide adhering solids in disposable dishes, such as pastes and jellies, that can be eaten with utensils under more normal conditions.

5.4.6.3.4 Working.

Interior. - Working stations are established that minimize or eliminate nearby personnel movement. Passageways are large enough to allow two crewmen to pass each other without interference. Most stations will be provided with a backed chair for both gravity and zero-gravity use. Leg and arm restrainers will be built into the chairs. A belt type restraint harness will be used, with hooks for chair connections that can be cinched to hold the crewman close to the chair.

At stations requiring mobility or only short time attendance, a rail will be used for coupling by the restraint belt. Foot restraint cups will be provided at various locations in front of these stations for zero-gravity use.

Exterior. - Certain exterior positions will require provisions for extravehicular attendance or maintenance by crewmen. Such places include hatches, hub docking ports, reaction control nozzles, floodlights, antennas, umbilical, etc. These places must have the thin outer meteoroid shield reinforced and provide recessed hooks for snap attachment of restraining lines or harnesses.

Floodlights are provided for external activity while in Earth umbra. External activity will require two crewmen, with one stationed near the closest hatch in a position to observe the other. A retrieval line will extend from the closest hatch to all crewmen performing extravehicular activity with suit lines or backpacks.

5.4.6.3.5 Recreation. - Recreational equipment will include personal hobby or avocation material where possible, with a given mass limit which depends upon the logistics vehicle launch mass limits. General recreational equipment will be provided in the living area for passive recreation such as microfilm readers, slide viewing, card games, etc. Active recreation will be combined with exercise functions in the large experiment bay.

Moving pictures, especially those on a large screen, are recommended as a means of temporary mental removal from personal cares and concern in the orbiting laboratory. These are readily accommodated in the experiment bay where a large screen and projector facility can be set up.

5.4.6.3.6 Exercise. - Exercise requirements are readily met by utilizing the experiment bay as a court or gym. Special nets that provide a 3-dimensional form of volley ball are provided, as well as basketball-type nets and balls. Obviously, the balls must be very light in mass to prevent damage to the pressure shell. Reinforced attach points are provided in the pressure shell for nets. Although the walls are presently designed for a smooth interior, future requirements for use of two large bays may indicate that stringer construction on the inside, rather than outside in preferred. This would allow impacts with the wall without fear of damage to the pressure shell.

Special exercise machines are also provided in the living quarters. These are not large all purpose types, since the gym is available, but rather simple hand, arm, and leg muscle strengtheners using springs and gages.

5.4.6.3.7 Food, Storage, and Preparation. - A 11,700 joule (2800 calorie) diet consisting of approximately 10% protein, 25% fats, and 65% carbohydrate is provided. The foods provided also includ amino acids, fatty acids, and fat soluble vitamins. The eight amino acids are essential to the maintenance of nitrogen equilibrium in the body. These, with the fatty acids and fat soluble vitamins, although not required for short duration missions, must be provided for the OLF mission. Water soluble vitamins and minerals must also be provided to supplement the diet on a daily basis. While excessive intake of vitamins or trace minerals is rarely harmful, deficiencies of certain of these are insidious in onset and may become incapacitating with relatively little warning.

Since water is reprocessed by the environmental control/life support system, freeze-dried or standard dehydrated foods are provided, rather than frozen foods. The freeze-dried food is processed under high vacuum to remove more than 98% of the moisture from the food while it is in the frozen state. The major portion of the food will be freeze-dried to retain better taste, texture, and eye appeal. To provide a maximum of variety, some frozen food and some nondehydrated foods are also included, which raises the mass per man-day requirements above that proposed for MORL and shorter missions.

Mass and volume requirements for food supplied by the various processes, including vitamin supplements, would require the following:

	Rate per Man-Day			
	Mass		Volume *	
	kg	lb_m	cm^3	in^3
Frozen	1.52	3.35	1170	108
Dehydrated	.66	1.45	1410	86
Freeze-dried	.52	1.15	870	53
SELECTED COMBINATION OF ABOVE	.75	1.66	1180	72

* Add 50% for packaging and total storage, including cabinets.

At the outboard end of each MORL is an emergency area or sanctuary used when the OLF must be vacated. As a 15-day emergency provision, 36 kg (80 lb_m) of the food supply will be stored in each sanctuary. This will be high energy foods and candy bars.

In keeping with the desire to reduce all known sources of discomfort to the crewmen, each will be provided with food of his choice, based upon presampling during simulated flight tests. Foods that will be eliminated if possible include diarrhea or flatus producers, which may be different types of food for different crewmen.

Food preparation is generally by reconstitution using accurately measured amounts of hot or cold water. Frozen and non-dehydrated food will be prepared by normal methods, with cooking in some cases. Wherever possible, zero-gravity food tubes or bags will be replaced by more conventional containers and eating methods. Sticky or tacky foods with good adherring qualities will be eaten from dishes in a normal manner, using Velcro or other methods to hold dishes and utensils to the table. Zero-gravity operations require the use of a vent filter, fan, and hood at the food preparation and eating area to gather and remove food particles, moisture, or liquids.

5.4.6.3.8 Medical and Dental. - The probability of medical emergencies increases considerably with added crewmen, especially those of the checkout and launch crew who perform work of a heavy, hazardous, and timely nature. In addition, since some crewmen will be selected primarily for their skills rather than their health condition, some physiological or mental illnesses can be expected. Crewmen who have known medication requirements, and yet are cleared for orbit duty, will include such medications with their personal affects.

Medication, bandages, and medical/dental equipment will be similar to that proposed for the MORL, with most of the quantities doubled for the total OLF supply. In addition, the following will be provided at a single medical/dental facility located in one of the MORL's:

- Stethescope
- Sphygomameter
- Otoscope
- Opthalmoscope
- Laryngoscope
- X-Ray Machine
- Microscope
- Treatment Table
- Mask and Breathing Bag
- Urinalysis Kit
- Pipets and Hemocytometer
- Surgical Instrument Set (Artificial Gravity Only)
- Plasma/Albumin
- Intravenous Fluids and Tubes (Gravity or Syringe)

5.4.6.3.9 Personal Hygiene. - Personal hygiene functions can be accomplished by "normal" methods when a gravity level is provided. However, for the zero-gravity modes, special provisions must be made, especially if standard methods are desired. Typical personal hygiene functions and methods are shown below, with standard methods shown first. Selected methods are shown with an asterisk (*):

Hand Wash

  Basin with water and cloth

* Chemical cleaning cloths

Body Wash

* Shower with water

  Chemical cleaning pads

  Plastic bag bath

Shaving, Nail Clipping, etc.

- Mechanical
- Chemical (depilatory salves)
- * Mechanical with vacuum bag attachment

Body Orifice Cleansing

- (Auditory Canal and Nose)
  - Wash cloth
  - Hankerchief
  - * Ear Loop (by others)
- (Anus)
  - Toilet paper
  - Lintless tissues
  - * Chemical cleaning cloths (disposable)
- (Teeth and Mouth)
  - * Tooth paste and brush
    - Non-edible
    - * Edible
  - * Mouth wash
  - * Chewing gum
  - Disposable sponges

Clothing

- * Washable
- Disposable

In all cases, the requirement for maximum personal comfort or odor removal has been selected. The MESA program indicated the desirability of showers for body cleaning, even though chemical pads are less weight. Chemical pads, on the other hand, are preferred with, or in place of, toilet paper, to assure antiseptic and odorless cleanup after excretion. Deodorant pads may also be used during hand washing to keep down perspiration.

For the zero-gravity modes, a shower using a plastic cylinder through which water is directed via atmosphere flow is provided, rather than a plastic bag type. The plastic bag method is undesirable for the following reasons:

Stabilization of subject

Incomplete rinsing

Incomplete drying

Neck sealing

Accidental rupture

No neck and head cleaning

5.4.6.3.10 Clothing. - The primary requirement for clothing is that it be porous so as to "breathe" properly and have low odor retention. It should have good absorbancy for perspiration and resistance to wear by repeated washing/drying cycles. For zero-gravity operation, the clothing must also be lintless. Shirt and trousers are preferred over tunics from the psychological standpoint and for ease of use under pressure suits.

Personally-sized clothing will consist of a shirt, trousers, socks, slipper shoes, sandals, and gloves of the following description:

Shirts. - The fabric for shirts should be jersey knitted in the form of a polo shirt and cut to achieve a relatively tight fit to the chest and torso. The sleeves should be wrist length, two breast pockets patched to the shirt, and the tail cut for comfort when worn inside or outside the trousers. The neck could be of the "turtle neck" or woven band type. A bulked silk or nylon H-T-1 yarn totaling about 150 denier is recommended. Shirt colors will be varied over a wide range of soft colors and patterns. Off-duty shirts may be different colors than on-duty shirts.

Trousers. - Should be tricot knit using the yarns recommended for the shirt, ankle length, and have an ankle band and belt knitted of spandex stretch yarn to achieve a snug fit. Four patch pockets with velcro closures should be sewn to the garment.

Since most attempts to use traction shoes during weightlessness have been unsatisfactory, it is suggested that a modified slipper work shoe and sandals for leisure be used. The shoe fits tightly about the lower leg to a height of 6 inches. Light gloves are also provided. All of the above clothes, with the exception of the sandals and gloves, will be worn as under-garments in the pressure suits. The pressure suits are also sized for each man.

Non-sized clothing is provided as on-board stores of the OLF. These include heavy coveralls, heavy gloves, drawers, T-shirts, and emergency pressure suits. Three sizes of each will be used.

The individually sized pressure suits will be moved from the living area to the main working area of each crewman each day. The full pressure suits are tentatively established as Apollo suits modified to include carbon dioxide monitoring and vomitus collection. The backpack for extravehicular activity (EVA) is considerably modified to delete certain telemetry functions and to provide a propellant capacity. Four hours EVA operational capacity is considered adequate for the OLF requirements.

5.4.6.3.11 Housekeeping and Laundry. - The MESA program studies indicated the need for cleanliness througout the facility. Vacuum cleaners and sponge mops areprovided in each MORL and the hub area. Wipe-up rags that can be washed and chemically treated for absorbancy will be provided throughout the facility.

Studies by manufacturers have indicated that zero-gravity washer/dryer combinations are feasible, within adequate mass limits. Since many changes of clothes are desirable from the psychological and odor removal standpoint, a washer/dryer combination will be included in each MORL.

5.4.6.3.12 Locomotion and Restraint (Zero-Gravity). - Zero-gravity locomotion and restraint provisions within the OLF units will be essentially the same as that proposed for the MORL Phase IIA design. A 203.2 cm (80 in.) floor to ceiling height at the MORL working levels allows compression walking by using hands and feet together. The elevator tubes provide restrained guided motion between the MORL's and the hub sections. Logitudinal rails are located in the tubes and on the periphery of the hangar bay and experiment bay walls.

Since the spinning mode requires constant close attachment for extravehicular activities, recessed hooks are provided at each external work or repair station. Inside the OLF, rails and belt restraint devices similar to those proposed for MORL will be used. Velcro loop and hook materials can be used at various locations around the facility to restrain tools and moveable equipment.

Vertical restraint walls will be provided by a separate large closet for each pressure suit. These walls serve the function of holding the suit in storage and stabilizing crewmen while putting the suit on. Although this method requires more volume, it is deemed necessary for rapid suit donning.

5.4.6.3.13 Radiation Protection. - The radiation environment has been described in paragraph 5.3.1.5. In general, the OLF structure and equipment offers protection that, at this time, is assumed to be adequate for the main hazards of trapped and galactic cosmic radiation. Solar cosmic ray outbursts, although yielding a comparable flux over a long time period, are of much lower energy. Major outbursts having integrated doses of >100 rads for particles >30 Mev occur only once or twice a year. Present indications are that Earth monitoring will provide adequate warning time for crew movement and use of available protection.

One solution to the solar outburst problem is to provide additional shielding at each bunk. Since the bunks are located parallel to the outer wall, a sleeping or resting crewman would have the least protection from a whole body dose. This method would protect sleeping crewmen, but would require bunk stay times of up to

24 hours for major outbursts. Another method would be to move the crewmen to one end and continuously maintain attitude along the sun line to use the entire vehicle as a shield. The method tentatively chosen for the OLF is to use the area in each MORL having the least dose as a result of combined wall, floor and equipment shielding. Consoles and walls in these areas have a nominal amount of shielding added.

5.4.6.3.14 Fire Protection. - Fire protection functions on-board the OLF will have to be included in the routine operations of the crew. Inspections of the OLF should be thorough and occur several times a day. In particular, potential fire producing areas and materials of a combustible nature should be observed.

An automatic sprinkling system type of fire control is not deemed desirable, since hot spots will occur due to normal operation and since much of the equipment cannot be made inoperative without cause. The zero-gravity mode, of course, makes fire fighting a special problem, and whenever possible depressurization of the compartment will be used.

Pressurized extinguishers will be placed in nine locations throughout the OLF. In the hub, chemicals will be provided that can quickly smother propellant or OLV servicing fluid fires. Water connections will be available in the MORLs and water should be used whenever practical to minimize the clean-up problem. The N_2O_4 propellant is fairly stable, but will burn rapidly when combined with the UDMH fuel. Since little time may be available for extinguisher use or compartment evacuation and depressurization, copius amounts of water could be used. For these propellants, a remote controlled flood valve located near the tanks and manifolds is provided.

Fire detection sensors will include both temperature and gas analyzer types. For fires detected in unoccupied compartments, the procedure will be to verify hatch closure and dump the atmosphere. This procedure is preferred over the use of extinguishing materials and for this reason, propellants and other combustibles are stored outside of normal crew areas.

5.4.6.3.15 Extravehicular Activity (EVA). - Backpacks are provided for EVA periods of up to four hours. The EVA requirements are quite different from those of the Apollo mission. The backpack must provide propellant capability for approximately 500 fps total velocity change (at constant thrust specific impulse values). In addition, an electrical power source for operation of lights on the backpack and possible use of electric tools must be provided. Repair kit or replacement spares storage compartments must be included.

5.4.6.3.16 Crew Support Equipment List. - The items required for crew support are listed on Figure 5.4-65. Quantities are shown for each crewman and for the total OLF. Mass values of each are noted. The equipment type, construction, and mass values have been taken from source data by Boeing and others for studies of MORL, AES, and manned military missions.

FIGURE 5.4-65 CREW SUPPORT EQUIPMENT

	Mass (Each) kg	Mass (Each) lb_m	Quantity per Crewman	Total Initial Launch Quantity
Personal Equipment (5-Man crew)				
Shoes (Pair)	.50	1.10	2	10
Socks (Pair)	.03	.06	4	20
Shirts	.12	.27	4	20
Trousers	.35	.77	2	10
Belts	.08	.17	2	10
Sandals (Pair)	.36	.80	1	5
Gloves - Light (Pair)	.07	.15	1	5
Handkerchiefs	.02	.04	4	20
Personal Kit (1)	.66	1.45	1	5
Personal Effects (2)	1.14	2.50	1	5
Personal Recreation	4.22	9.30	1	5
Pressure Suits	15.60	34.40	1	5
OLF Crew Support Equipment (12-Man Capacity)				
Personnel Provisions				
Sleeping Bags	.5	1.1	1	12
Liners	.2	.4	2	24
Coveralls/Gloves - Heavy	.7	1.5	n.a. (3)	6
Drawers & T-Shirts	.2	.4	4	48
Pressure Suits	15.6	34.4	1/2	6
Radiation Protection	127.0	280.0	n.a.	1
EVA Backpacks (dry)	21.8	48.0	n.a.	4
Clothing/Suit Repair (Incl. in Maintenance)	--	--	--	--

continued on next page

(1) Includes watch, combs, brushes, medicine, eye glasses, etc.

(2) Includes momentos, religious articles and private items.

(3) N.A. - Quantity per crewman not applicable.

FIGURE 5.4-65 CREW SUPPORT EQUIPMENT CONTINUED

	Mass (Each)		Quantity per Crewman	Total Initial Launch Quantity
	kg	lb_m		
OLF Crew Support Equipment (Continued)				
Hygiene Provisions				
Toilet Sets	2.4	5.3	1	12
Sponge/Towel Sets	.2	.4	2	24
Haircut/Shaving Sets	.9	2.0	1/6	2
Showers	10.0	22.0	1/6	2
Toilet (Incl. In Structure)	--	--	--	--
Household Provisions				
Laundry Equipment	45.4	100.0	n.a.	2
Fire Extinguishers	3.0	6.5	n.a.	18
Galley Equipment	34.0	75.0	n.a.	2
Reusable Food Containers/Utensils	29.0	64.0	n.a.	2 sets
Vacuum Cleaning	4.5	10.0	n.a.	2
Cleaning Equipment	6.8	15.0	n.a.	2
Flashlights (Incl. in Maintenance)	--	--	--	--
Recreation/Information Provisions				
Microfilm Readers	9.1	20.0	1/6	2
Tape Units	13.6	30.0	1/6	2
Film/Slide Projector/Screen	20.4	45.0	n.a.	1
Film/Tape/Slide Library	60.3	133.0	n.a.	1
Game Set	6.8	15.0	1/6	2
Film Viewers	6.8	15.0	1/6	2
Film Developing Set	9.1	20.0	1/12	1
Binoculars	1.3	3.0	1/6	2
Small Telescope	4.5	10.0	n.a.	1
Exercise Equipment	33.6	74.0	n.a.	2 sets
Trampoline	22.7	50.0	1/12	1
Medical/Dental Provisions				
Medications	9.1	20.0	n.a.	2 sets
Bandages/Splints	3.6	8.0	n.a.	2 sets
Medical Instruments	2.3	5.0	n.a.	1 set
Dental Instruments	2.3	5.0	n.a.	1 set
Medical/Dental Facility	36.3	80.0	n.a.	1
Weighing Scales	9.1	20.0	1/6	2

continued on next page

FIGURE 5.4-65 CREW SUPPORT EQUIPMENT CONTINUED

	Mass (Each)		Quantity per Crewman	Total Initial Launch Quantity
	kg	lb_m		
OLF Crew Support Equipment (Continued)				
Furnishing Provisions				
Lounge Chairs	4.5	10.0	1/2	6
Bunks	5.4	12.0	1	12
Mattresses	2.7	6.0	1	12
Chairs - Operations	4.5	10.0	1/2	6
Chairs - Dining and Recreation	.9	2.0	n.a.	8
Clothing/Equipment Containers	2.7	6.0	1	12
Zero "G" Restraint Provisions (Average)	1.4	3.0	n.a.	30
Velcro Materials (Average)	.9	2.0	n.a.	25
Hand Holds and Rails (Incl. in Structures)	--	--	--	--
Pressure Suit Closets (Incl. in Structures)	--	--	--	--

5.4.7. Checkout and Monitoring

5.4.7.1 Requirements

5.4.7.1.1 Checkout Criteria. - OLF checkout will be accomplished to detect equipment failures and/or degradation and to provide sufficient information for the crew to take corrective action. A checkout prior to each critical mission phase will allow the crew to update the operational status of the OLF systems after earth launch and accomplish maintenance, select alternate operating modes, or modify the mission if required. Basic criteria governing design and use of this system are as follows:

a) Minimum testing consistent with assuring operational readiness of OLF systems. Every test must provide the crew with information essential to making one of the following decisions:

- Continue Mission
  - Normal mission maximum reliability
  - Normal mission reduced reliability
  - Limited mission
- Select alternate operational mode and/or accomplish repairs
- Abort

b) Maximum use shall be made of basic vehicle systems, instrumentation crew controls and displays.

c) The reliability of the checkout system must be substantially higher than the vehicle system reliability.

d) To the maximum extent possible, the checkout system must provide fail-safe operation and self-verification. A checkout system failure must not damage or impair the operation of other vehicle systems and a self-test mode must be incorporated to allow verification of correct checkout system operation before it is used to evaluate other systems.

e) Power consumption during checkout operations will be minimized. Consideration will be given to parallel checkout of individual systems when feasible.

5.4.7.1.2 Subsystem C/O and Monitoring Requirements. - The basic checkout and monitoring requirements for each OLF subsystem are described as follows:

a) Checkout system. - Control and operation of the checkout system will be by means of a crew control and display panel. This panel will incorporate provisions for energizing and conducting a self-test and calibration of the checkout system. After energizing the system and allowing time for thermal stabilization, the test operator will initiate a self-test sequence and observe the responses on the display console. For any deviations outside the tolerance limits, corrective action must be taken prior to any OLF system testing.

b) Electrical power system. - The checkout operations for the electrical power system are based on detecting failures in safety controls and monitors and a verification of crew controls and displays.

. Frequency and voltage monitors will be evaluated for proper operation of the two alternators. This will require eight tests of high, low, and a tolerance voltages and frequencies for each alternator.

. The ac voltage, ac current, and frequency of both static inverters will require six tests.

. Emergency batteries will be checked for proper operating voltages.

. The isolation and switching of essential and non-essential electrical loads will be checked for proper operation.

c) Guidance and Navigation System. - The attitude drift of the inertial measurement unit (IMU) will be determined by reference to the stellar sightings. This will measure the performance of the gyros under an acceleration type environment.

Checkout of the three axis integrating rate gyro system in the "caged" mode should result in a readout of zero. In the "operate" mode the display will indicate the difference between the programmed attitude and the vehicle attitude as measured by the integrating gyro. Selected torque programmer inputs will be required in this mode.

The rendezvous radar will be checked for power output, receiver sensitivity, and tracking capability by built-in sensors. The data transmission servos between the computer and the radar will be exercised for specific test conditions by the computer test program.

d) Attitude Stabilization and Control System. - In the thrusting configuration, a given attitude rate error will result in a specific command to the thrusters. An end-to-end test of this loop will be made as follows:

The checkout equipment will insert a command torque on the rate gyro and read out the resulting deflection.

The attitude hold circuit will be switched in during the above test and the polarity and rate of change of control jets checked.

For the automatic mode, throttling value positions resulting from computer commands to the attitude rate gyros will be checked.

e) Communication System. - The S-band communication system will be checked by operational transmission of voice and telemetry data with the deep space instrumentation facility. These tests will include all the modes of operation to reveal the overall system status. In conjunction with the above operational checkout, the checkout system will monitor "automatic gain control" level, "automatic frequency control" level of the receiver, and power output of the transmitter. The S-band antenna will be utilized and test transmissions of voice, data, and television information conducted to verify the performance of the on-board television cameras, monitors, and associated electronics.

The VHF communications system tests will include all of the redundant modes of operation to determine the overall system status. Specific checks will include receiver sensitivity and automatic gain control and transmitter power output.

The backpack communication system will be conducted while maintaining visual contact with the extravehicular astronauts.

f) Environmental Control System. - Pressurization and atmospheric purification checkout for the hub and elevator tubes will be accomplished by continuous monitoring of the O_2 and N_2 pressure system and air circulation system. Atmospheric conditions of each compartment will be checked and monitored prior to and during use to determine hazardous conditions of contamination, temperature and pressure. Circulation and control units within each compartment will be checked prior to use. Umbilical life support connections provided ineach compartment utilizing the MORL atmosphere supply and purification will be continuously monitored.

Figure 5.4-66 is a summary of the OLF checkout and monitor requirements.

5.4.7.2 Technical Studies. - The technical studies conducted for this OLF subsystem were directed entirely towards an evaluation of the space checkout and launch equipment study performed by the Lockheed Corporation under another separate but parallel contract from NASA.

As this SCALE study evolved, it became increasingly clear that the checkout equipment configuration proposed for installation on-board the OLF for the prime purpose of checking out the OLV's launched from the OLF had all the inherent capabilities to perform the checkout of the OLF. In fact, the degree of sophistication and flexibility of the Lockheed checkout system will easily permit its use for testing the OLF equipment.

Further analysis also indicated that no equipment design changes to the Lockheed system were required to meet the OLF checkout requirements. The major interface requirements between the OLF and Lockheed systems were determined to be in the development and integration of the software programs used to perform the checkout and monitoring of the OLF.

The integration of these checkout programs will require careful considerations with respect to timing for data access, evaluation, display, recording, and formatting for transmission.

5.4.7.3 Recommended System. - The OLF checkout and monitor system block diagram shown in Figure 5.4-67 reflects maximum use of the Lockheed space checkout and launch equipment as noted previously. As shown in the block diagram, a 160 channel analog multiplexer and analor/digital converter will be required to format data for entry into the test computer. The digital and discrete input data from the OLF will also be routed into the data access units of the checkout system.

SUBSYSTEM	MEASUREMENT TYPE			SAMPLING RATE		ACCURACY	DISPLAY
	ANALOG	DIGITAL	DISCRETE	LOW	HIGH		
ELECTRICAL POWER	38	0	5	3/MIN	1/SEC	2%	VOLTAGE — CURRENT SWITCH POSITIONS FREQUENCY
GUIDANCE & NAVIGATION	26	8	4	5/MIN	1/SEC	1%	AC — VOLTS STORAGE REGISTER
ATTITUDE CONTROL & STABILIZATION	5	3	8	1/MIN	1/SEC	2%	VOLTAGE (ANALOG) DISCRETE POSITIONS
ENVIRONMENTAL CONTROL	36	-	11	1/HOUR	1/SEC	2%	VOLTAGE (ANALOG) DISCRETE POSITIONS
LIFE SUPPORT	22	-	-	1/HOUR	1/SEC	2%	VOLTAGE (ANALOG)
STRUCTURES	18	-	-	1/HOUR	1/MIN	1%	VOLTAGE (ANALOG)
COMMUNICATIONS	17	-	-	3/MIN	1/SEC	1%	VOLTAGE — CURRENT DISCRETE POSITIONS (ANTENNA) FREQUENCY

Figure 5.4-66: OLF C/O AND MONITOR REQUIREMENTS

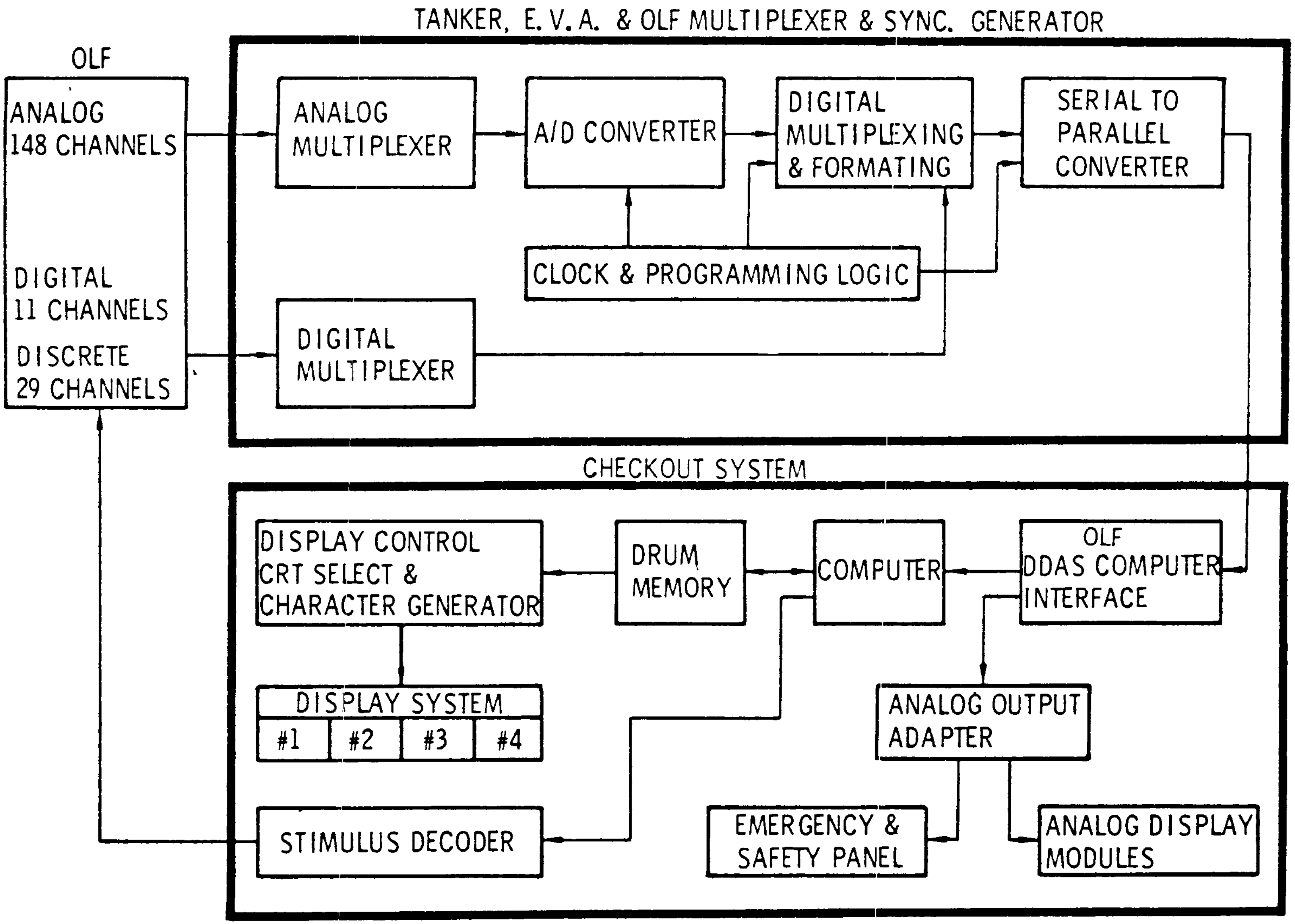

Figure 5.4-67: OLF C/O AND MONITOR SYSTEM

The design shown in this figure reflects time shared use of one of the major input devices contained within the Lockheed design. This is represented by the large upper block entitled, "Tanker, EVA, and OLF Multiplexer and Sync. Generator". Data routed from this input device is buffered into the checkout computer and subsequent data is displayed on demand at any one of the appropriate display devices. Stimulii required for transmission to the OLF is routed through the Lockheed checkout system stimulus decoder for command generation. This permits the necessary closed loop operation of the SCALE system with the OLF equipment.

No attempt has been made to identify any of the software requirements unique to the OLF other than to recognize this important interface. However, with respect to the type, amount, and schedule of checkout and monitoring data expected from the OLF subsystems, there is no indication of any developmental problems necessary for the Lockheed system that can be reflected back to the OLF requirements.

5.4.8 Data Management & Communications

5.4.8.1 Requirements. - The basic elements of the orbital launch complex are the Orbital Launch Facility (OLF), the Orbital Launch Vehicle (OLV), and the Earth-based mission control center (MCC). In addition, secondary elements that are integrated into the communication subsystem are fuel tankers, supply ferries, and extravehicular astronauts. A pictorial description of these communication links is shown in Figure 5.4-68. The three major elements require full duplex voice, televisioned, and data transmission, while the secondary elements require somewhat less capability. The type and amount of information that must flow between these elements is dependent on their functional responsibilities. These functional responsibilities are defined for the OLF, OLV, and MCC as follows:

OLF

a. Orbital operation calculation

b. Checkout control

c. OLV fault isolation

d. Control of docking and servicing

e. Orbital launch operations status control

f. OLV status control

g. Orbital operations direction

h. Consumables inventory

i. Checkout data acquisition and compression

j. Orbital launch data acquisition and quick look analysis

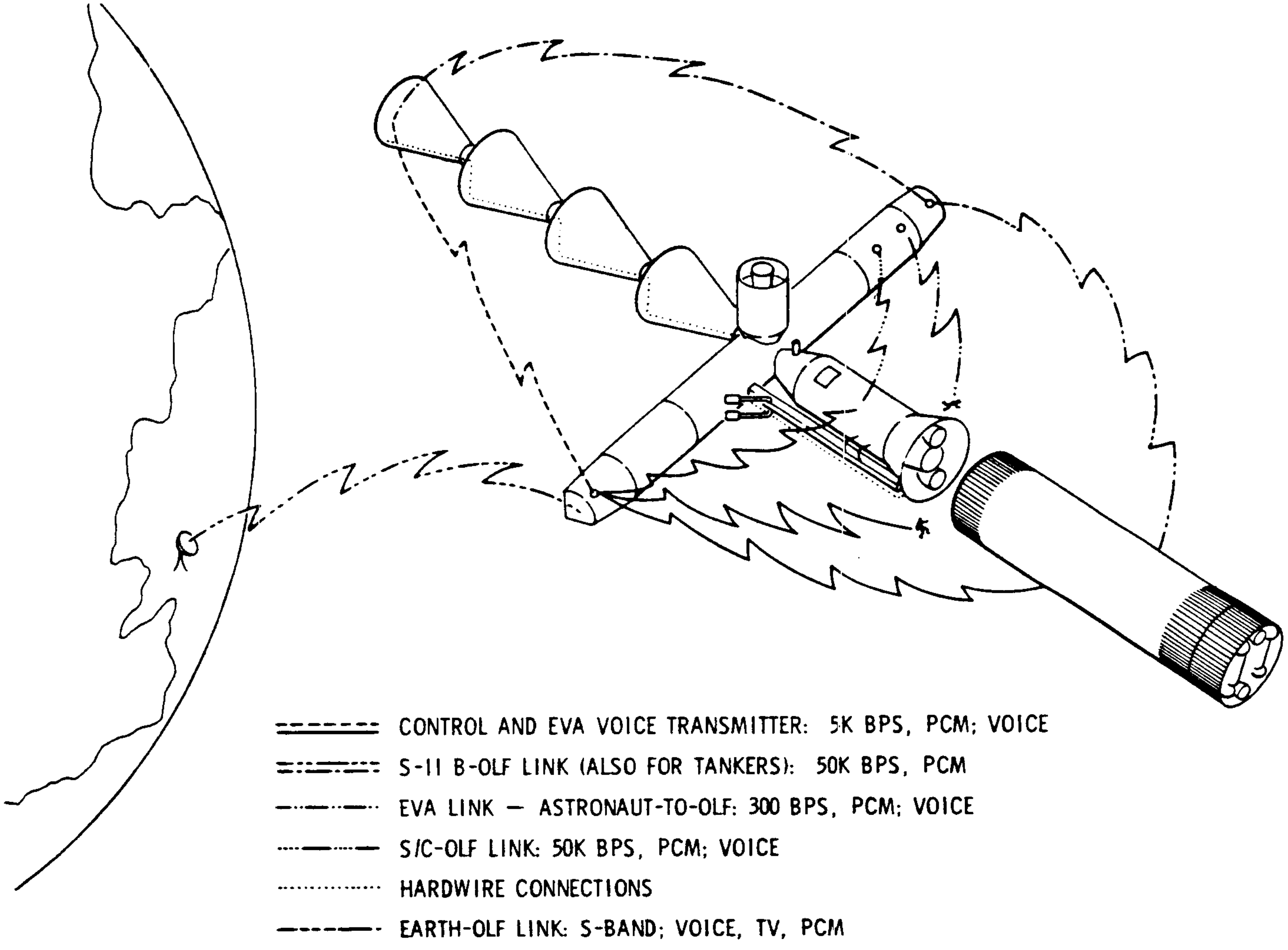

Figure 5.4-68: OLF COMMUNICATION LINKS

k. Orbital launch control

OLV

a. Measuring system

b. Stimulus system

c. Checkout sequencer & comparator

d. All current flight functions

e. Backup OLV in-orbit control

f. Astronaut participation

MCC

a. Earth launch data acquisition

b. Earth launch data analysis

c. Earth launch scheduling

d. Orbital launch scheduling

e. Space mission navigation computation

f. Earth to orbital rendezvous navigation computation

g. Goss scheduling and control

h. Missions operations control

i. Computer program generation and verification

j. Detailed data processing

k. Orbital determination

l. Backup OLV status control

m. Backup checkout control

From these functional responsibilities, an intercommunication matrix can be developed as shown on Figure 5.4-69.

The narrow band data channel will be used exclusively for bioastronautical and environmental monitoring that is associated with the health and welfare of the astronauts. The high band data channels must be capable of handling computer program inputs and high speed readout of stored data.

	OLF	OLV	EARTH	TANKER	FERRY	EXTRAVEHICULAR ASTRONAUT
OLF to To	--------	Voice Wide band TV Wide band data	Voice Slow scan TV Wide band data Narrow band data	Narrow band data Voice	Narrow band data Voice	Voice Narrow band data
OLV to To	Voice Wide band TV Wide band data Narrow band data	--------	Secondary Mode: Voice Narrow band data	Narrow band data Intercom		Voice
Earth to To	Voice Slow scan TV Wide band data	Voice Narrow band data	--------	None	Voice Narrow band data	None
Tanker To	Intercom Narrow band data	Intercom Narrow band data	None	--------	None	Voice

Figure 5.4-69: INTERCOMMUNICATION MATRIX

	OLF	OLV	EARTH	TANKER	FERRY	EXTRAVEHICULAR ASTRONAUT
Ferry To	Voice	Voice	Voice Narrow band data	None	---------	Voice
Extra-vehicular Astronaut To	Voice Narrow band data	Voice	---------	Voice	Voice	---------

Figure 5.4-69: INTERCOMMUNICATION MATRIX (CONTINUED)

Narrow band TV is a non-real time, slow scan system whereby TV pictures of commercial quality can be transmitted in real time at a frame rate of 30 per second.

5.4.8.2 Technical Studies

5.4.8.2.1 Orbital Studies. - The orbital parameters of altitude, eccentricity, and inclination impose a number of constraints on the communications subsystem. The altitude of the OLF will determine the length of time that line of sight communications can be maintained with each ground station along with the maximum range over which the communication links must operate.

Figures 5.4-70 and 5.4-71 give the ground track for a circular orbit of 288 nautical miles altitude and an inclination of 30° with respect to the equator. Assuming that reliable communications can be provided only for elevation angles of greater than 5° (which corresponds to a communication radius of 1200 nautical miles), 36 land and ship-based ground stations will be required to provide nearly continuous coverage while once-per-orbit contact can be accomplished using only three ground stations. Three stations located in the western hemisphere will provide reliable, once-per-orbit communications at approximately the same time in each orbit.

The selected ground sites are the Manned Space Flight Network Station at Corpus Christi, Texas; and at Satellite Tracking Network stations at Quito, Ecuador and Antofagasta, Chile. Figure 5.4-70 gives the communications time available per orbit for each of these stations. A total of 127.4 minutes per day of communication time is available, with the minimum time for any orbit being 5.1 minutes.

5.4.8.2.2 Ground Network Characteristics. - In order to provide economic and reliable operation, the communications subsystem should be capable of working into established ground stations with operationally proven equipment. At the same time, care must be exercised to prevent saturating the ground facilities that will be used to provide support for the ever-increasing number of short term operations. The cost of providing 24 hour per day manning of multiple, remotely located ground stations for the two year (minimum) life time of an OLF makes it mandatory to optimize the number and location of these stations. The cost of keeping a tracking ship continuously "on station" for two years must be carefully evaluated before their use can be established.

There are three primary factors to be considered in the selection of ground stations:

- Orbital coverage
- Available communication circuits to the MCC
- Logistic support requirements

A summary of the number and type of ground stations evaluated in this study is shown in Figure 5.4-72. Using the orbital parameter assumptions given with this figure, it can be seen that for continuous operations, a composite configura-

ORBIT NUMBER	CAPE KEN-NEDY	SAN SALVA-DOR	GRAND CANARY	KANO	INDIAN OCEAN SHIP	CANAV-ERAL	WOOM-ERA	CAN-BERRA	CANTON	KAUAI	AR-GUELLO	GUAY-MUS	TEXAS	QUITO	ANTO-FAGAS-TA	PACIFIC OCEAN SHIP	ASCEN-CION
1	4.3	4.6	7.1	7.8	6.4	8.0	7.1	7.0	8.3	1.9	2.5	8.3	8.3				
	5.4	6.2	9.9	10.2	9.2	10.5	9.6	9.6	10.7	7.3	6.4	10.8	10.8				
2	8.6	7.5	2.5	3.8	8.3	8.3	3.2	-	4.6	7.9	6.9	8.0	8.3				
	10.8	10.2		8.0	10.2	10.5	7.4	6.4	8.3	10.3	8.9	10.3	10.8				7.1
3	8.3	8.0	7.3		8.3	7.6				8.6	7.0	7.8	8.3				8.0
	10.8	10.7			10.5	10.2				10.5	9.6	10.8	10.8				10.5
4	7.3	7.5			7.6	3.2				6.8	6.1	7.6	6.7				7.3
	10.0	10.2			10.2	7.0				9.8	8.6	10.7	9.2	3.0			10.2
5					5.5					7.0		5.1		7.4			
	6.4	6.8			8.6					8.3	4.8	8.6	3.2	9.9			6.7
6										8.3				8.3	3.8		
										10.7				10.7	7.6	6.9	
7										7.6					8.0	8.3	
										10.2				7.6	10.4	10.2	
8									5.1						8.2	8.3	
									8.6	6.1				10.8	10.8		
9				5.7					8.3					7.6	7.0	7.6	
				9.2					10.8					10.4	10.2	10.2	
10				8.3					6.9					8.0	6.4	8.0	
				10.8					9.9					10.7	10.2	10.6	
11				7.6										8.2	8.0		
			4.8	9.9				2.9	5.4					10.6	10.8	7.3	
12			6.7					6.4					3.9	5.1	8.3		
			9.6	7.3				9.2					8.3	8.4	10.8		
13			8.2			2.5	4.8	8.0					8.2		5.1		
			10.8	3.8		7.0	8.3	10.3					10.8		8.5		
14		5.4	8.3			7.6	7.3	8.3				3.8	7.0				
	4.5	8.9	10.8	7.3		10.2	9.9	10.8				7.4	10.1				
15	6.7	7.6	8.3	7.0		8.3	7.6	8.3			2.5	7.3	8.3				
	9.6	10.5	10.8	10.2	5.9	10.8	10.2	10.8			6.4	9.9	10.2				
16	8.3	same as orbit #1															
	10.7																

Figure 5.4-70: GROUND STATION CONTACT TIMES

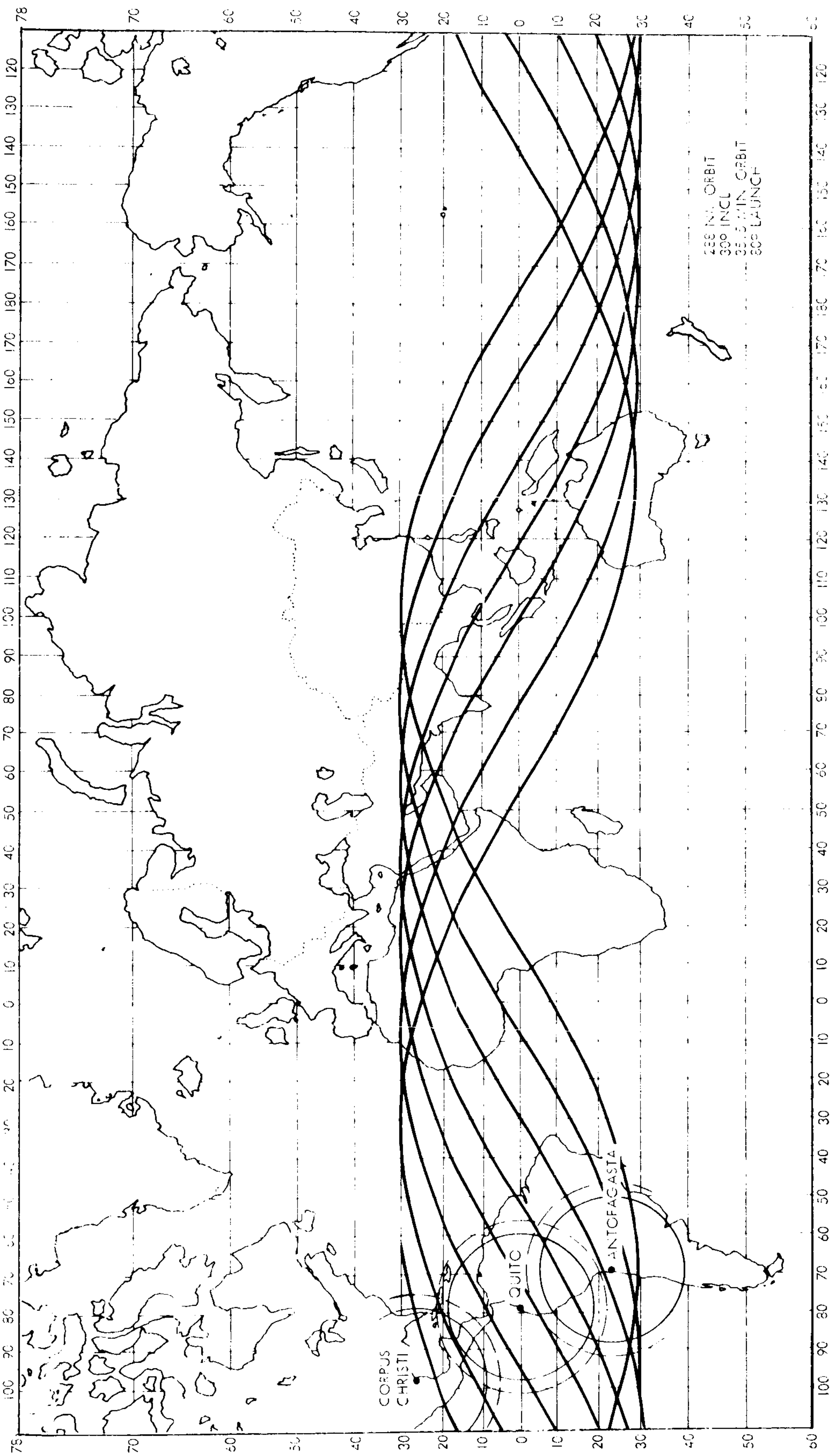

Figure 5.4-71: COMMUNICATIONS GROUND TRACK

- OLF ORBITAL PARAMETER ASSUMPTIONS

ALTITUDE	288 NAUTICAL MILES
ECCENTRICITY	CIRCULAR ORBIT
INCLINATION	30° WITH RESPECT TO EQUATOR
ELEVATION ANGLE	GREATER THAN 5°
ORBIT PERIOD	95.5 MINUTES
DATA VOLUME	17×10^4 BITS/SEC

COVERAGE	TOTAL NO. OF STATIONS	U.S. CONTROLLED LAND STATIONS		FOREIGN SOIL STATIONS		TRACKING SHIPS
		IN OPERATION	PROPOSED	IN OPERATION	PROPOSED	
NEARLY CONTINUOUS	36	4	2	5	22	5
ONCE PER ORBIT	3	1	0	2	0	0

Figure 5.4-72: GROUND NETWORK STATIONS

tion containing ground stations within the United States, foreign countries, and tracking ships is required. Using a once-per-orbit communication concept, the inherent disadvantages of this composite configuration is drastically reduced. Figure 5.4-73 indicates the near complete coverage shown by the circles obtained by the three stations indicated above. The facility characteristics at each remote site and the mission control center that are necessary to meet the OLF requirements are also listed on this figure. These facility items have been derived in part from current and anticipated equipment implementation schedules for the DSIF sites.

The stations at Corpus Christe, Texas; Quito, Ecuador; and Antofagasta, Chile provide optimum orbital coverage for the "once-per-orbit" concept. Wide band, microwave transmission facilities exist between the Corpus Christi and Manned Spacecraft Center (MSC) in Houston (locations of the MCC). Full duplex, 60-word-per-minute teletype-radio circuits, using the Canal Zone as a relay point, are available between Quito and Autofagasta and Washington, D.C., and it is expected that these are or will be tied directly into MSFC. Buffering and format conversion would be required to transmit video data received at these stations to the MCC.

5.4.8.2.3 Data Management. - A preliminary analysis associated with determining the amount of data to be transmitted to Earth was completed. In this analysis the total data requirements were developed using data derived from the SCALE Study and the OLF requirements. Figure 5.4-74 is a summary of these requirements.

FIGURE 5.4-74 ORBITAL CHECKOUT DATA REQUIREMENTS SUMMARY

	S-IIB (w. transtage)	Apollo	S/C	OLV Total	OLF
Control (Excitation)					
Discrete (Relay Actuate)	140	150	200	490	28
Analog (Waveform or level)	45	100	55	200	122
Digital (Avg. 10 bit words)	--	30	23	53	11
Total	185	280	278	743	161
Measurements (Response)					
Discrete (On-Off)	130	200	145	475	34
Analog	150	200	435	785	147
Digital	6	50	34	90	24
Total	286	450	614	1350	205
Data Storage					
Test Time (Max. c/o Min.)	35	50	100	--	
Bits/Sec. (Record for test)	15K	20K	30K	(max.)	50K

REPRESENTATIVE SITES

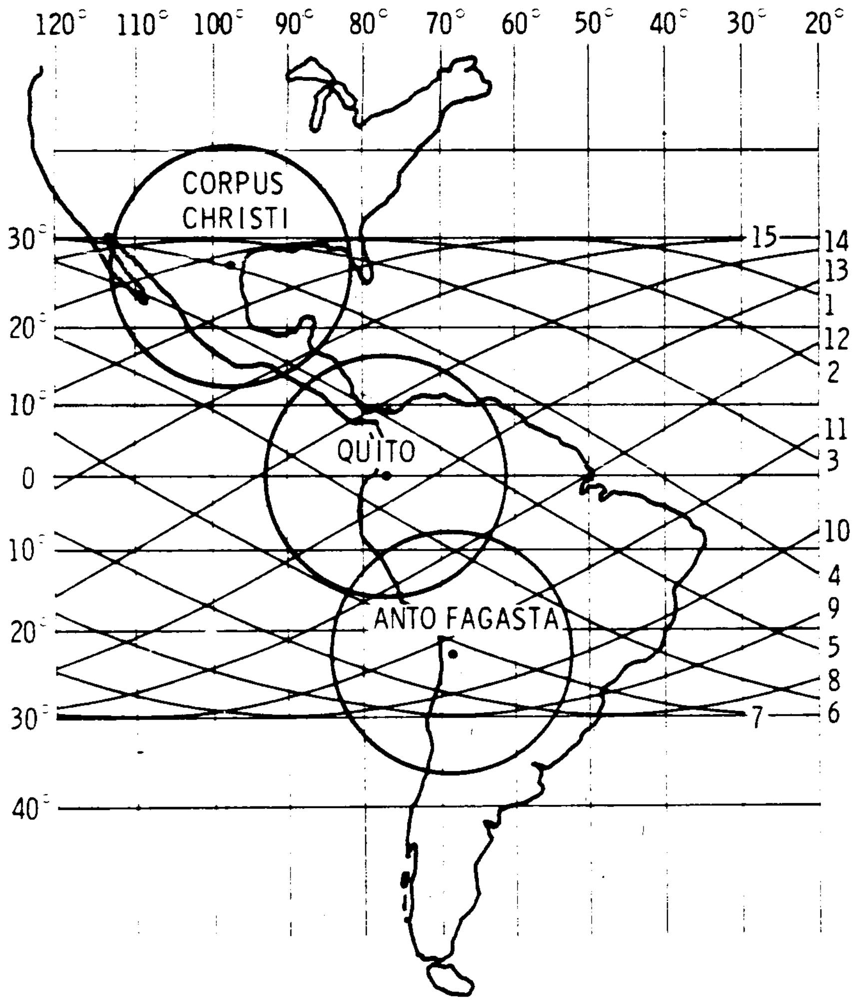

FACILITY CHARACTERISTICS

REMOTE SITES

UNIFIED "S" BAND COMMUNICATION EQUIPMENT
TWO WAY DOPPLER TRACKING & RANGING
ON-SITE DATA PROCESSING
    FLIGHT TELEMETRY
    FLIGHT COMMAND
    FORMAT CONVERSION & DATA EDITING FOR RETRANSMISSION

COMMUNICATION SYSTEM
    3 FULL DUPLEX TTY (30 bps)
    1 HIGH SPEED DATA (600 - 1200 bps)
    1 VOICE

FREQUENCY & TIME STANDARDS
DATA RECORDING
    FR 800
    FR 1200
    OSCILLOGRAPHS

MISSION CONTROL CENTER

DATA PROCESSING SYSTEM
    CENTRAL COMPUTING COMPLEX
    TELEMETRY PROCESSING SYSTEM
    DATA CONTROL & DISPLAY

COMMUNICATIONS SYSTEM
    6 FULL DUPLEX TTY (30 bps)
    4 VOICE
    3 HIGH SPEED DATA (600 - 1200 bps)
    1 WIDE BAND ANALOG DATA CHANNEL

Figure 5.4-73: GROUND NETWORK CHARACTERISTICS

The test time of 100 minutes is considered to be the maximum period required to accomplish the OLV checkout prior to launch and is used as a basis for determining the peak electrical power requirements for the space checkout and launch equipment. During this period the maximum bit rate is estimated to be 50 kilobits per second. However, for purposes of evaluating the total bit rate over the entire 100 minute period, an average of 25 kilobits is used. The resulting total bits to be processed on board the OLF during the peak checkout period is computed to be 150×10^6.

An evaluation of the type of test data to be processed during this period indicates a data editing ratio of 3:1 or 50×10^6 bits of processed data will be required to be transmitted to Earth. Assuming a 90-minute orbit and almost continuous communication coverage, 10^4 bits/sec will be required to be transmitted to the tracking stations. If a once-per-orbit transmission capability of 5 minutes is used, this will result in 17×10^4 bits/sec to be transmitted. This data rate is not considered to pose any technical problems in providing adequate data processing and transmission capabilities on board the OLF. However, the ground data processing and communication system will require further extensive evaluation associated with data edit modes and data transmission rates between the remote sites and the MCC.

5.4.8.2.4 Airborne Equipment Studies. - The primary equipment considerations for the communications system are:

- Transmitter power
- Antenna gain
- Receiver noise

The transmitter power that is available is limited by the state-of-the-art in proven, reliable power amplifiers. For the space borne application, an upper limit of twenty watts average power for both the "S" band and VHF transmitters will be assumed. A twenty watt traveling wave tube is presently available for "S" band operation. Five watt solid state power amplifiers are becoming available for both VHF and "S" band operation. By 1975 higher power devices should be available. A thirty-foot steerable parabolic antenna is assumed for the ground station terminal. These are already in operation at selected manned space flight stations and are programmed for use at additional stations.

Cryogenically cooled maser and parametric amplifiers have provided low noise receivers for use througout the usable spectrum. Two and three decibel noise figure receivers are quite common, and the primary limitation on received system noise is sky noise or effective antenna noise temperature. A nominal value of effective receiver noise figure of 3 db for antenna elevation angles of greater than 5° is used in this study. The use of high power transmitters on the ground precludes the necessity for ultra low noise amplifiers in the spacecraft. Only three of the communication links shown in Figure 5.4-68 will be analyzed for this study. Equipment used to provide these links will also be used for the other links which have less severe requirements. The links to be considered are:

- Space to Earth VHF and "S" band links
- OLF to OLV wide band TV
- Extravehicular astronaut link

5.4.8.2.5 OLF to Ground Station. - As stated before, the ground station will be assumed to have a 30-foot parabolic antenna and a 3 db effective noise figure receivers. The "S" band frequency of 2.2 gigacycles will be used with a total base band of one megacycle. These figures are based on the use of the NASA unified "S" band equipment, whose details are not known at this time. A carrier to noise ratio of 12 db is used, assuming the use of FM/FM multiplexing to provide the voice, data, video, and tracking capability. Modulation indexes for each subcarrier are assumed to be sufficient to provide the necessary post detection signal to noise ration. Figure 5.4-75 summarizes the resulting link analysis.

FIGURE 5.4-75 OLF TO GROUND - "S" BAND

Transmitter Power (1 watt ref)	0 dbw
Transmitting & Receiving Line Losses	-2.0 db
Transmitting Antenna Gain	0 db
Free Space Loss ($2.2g_c$, 1200 NM)	-166.4 db
Polarization Loss	-3.0 db
Receiving Antenna Gain	43.7 db
Tracking Loss	-1.0 db
Atmosphere Attenuation	-0.5 db
Required Transmitter Power For 10 db Margin	9.8 db 10 watts
Received Power	-129.2 dbw
10 Log KT	-204 dbw
10 Log B_{1F} (B_{1Fc}/mc)	60 db
Noise Figure	3 db
C/N	12 db
Required Receiver Power	129 db

5.4.8.2.6 OLF to OLV Wideband Television Link. - The OLF to OLV wide band television link will conform to commercial television standards. A link analysis summary is given in Figure 5.4-76. Amplitude modulation, vestigial sideband transmission at a carrier frequency of 150 mc was assumed. Figure 5.4-76 indicates this link analysis results.

FIGURE 5.4-76 OLF TO OLV WIDE BAND TV LINK

Transmitter Power (1 watt ref.)		0 dbw
Line Losses (Transmit & Receive)		-2 db
Transmitting Antenna		-3 db
Space Loss (150 M at 5 NM)		-95 db
Receiver Antenna Gain		-3 db
Receiver Power		-103 dbw
Receiver Noise Lower (B 6 MC, NF 6 db)		-138 dbw
Required C/N		26 db
Required Received Power		-112 dbw
Transmitter Power for 10 db Safety Factor	1.0 db	1.25 watts

5.4.8.2.7 Extravehicular Astronaut to OLF Link. - Each extravehicular astronaut will be provided with a two way voice communication set. In addition, the astronaut to spacecraft link will include a 300 bit per second data channel to provide an automatic check on the suit environment and the well being of the astronaut. This communication link will operate on a carrier frequency of around 50 megacycles to permit the use of efficient, non-direction whip antennas. The data channel will be phase shift keyed onto the carrier while conventional amplitude modulation of the carrier will be used to provide the voice channel. This technique will result in simple and reliable equipment. An alternate technique is to use a higher frequency and FM/FM multiplexing to provide a voice and data channel. A link analysis of the first technique is summarized in Figure 5.4-77.

FIGURE 5.4-77 ASTRONAUT TO SPACECRAFT LINK

Transmitter Power (ref. 1.0 watt)	0 dbw	
Line Loss (Transmitter)	-1 db	
Transmitting Antenna Losses	-6 db	
Space Loss (50 MC & 5 NM)	-85.5 db	
Receiving Antenna Losses	-6 db	
Receiver Line Loss	-1 db	
Received Power	-99.5 dbw	
Receiver Noise (Post detection bandwidth, 4 RC, NF 10 db)	-168 dbw	
Required S/N	12 db	
Required Rec. Power	-156 dbw	
Required Transmitter Power for a 20 db Margin	46 dbw	4 milliwatts

5.4.8.3 Recommended System. - Figure 5.4-78 shows the equipment block diagram of the OLF communications subsystem and indicates that all transmitter inputs and receiver outputs tie into the Lockheed checkout subsystem. Figure 5.4-79 shows the number and type of equipment that are expected to be provided in each element of the orbiting launch complex. Equipment details as defined below are based upon presently available or planned equipment and on current technology.

Two basic equipments in use today or planned for the future that will be used for the OLF are VHF and unified "S" band transceivers. These units will provide tracking, voice, telemetry, and television communication as required between the orbiting launch complex elements and earth-based ground stations.

5.4.8.3.1 Unified "S" Band Equipment. - A unified "S" Band communication subsystem is planned for use on the Block II Apollo vehicle, Apollo X, and post-Apollo vehicles to provide voice, telemetry tracking, and television transmission capability from Earth to spacecraft and from the spacecraft to Earth.

Tracking is accomplished by using psuedo random (PRN) ranging and coherent doppler techniques. The up-voice and data information are modulated onto subcarrier, and combined with the PRN ranging code. The resultant composite signal then pahse modulates the transmitted carrier. Spacecraft equipment extracts the subcarriers, which are then detected to obtain the up voice and

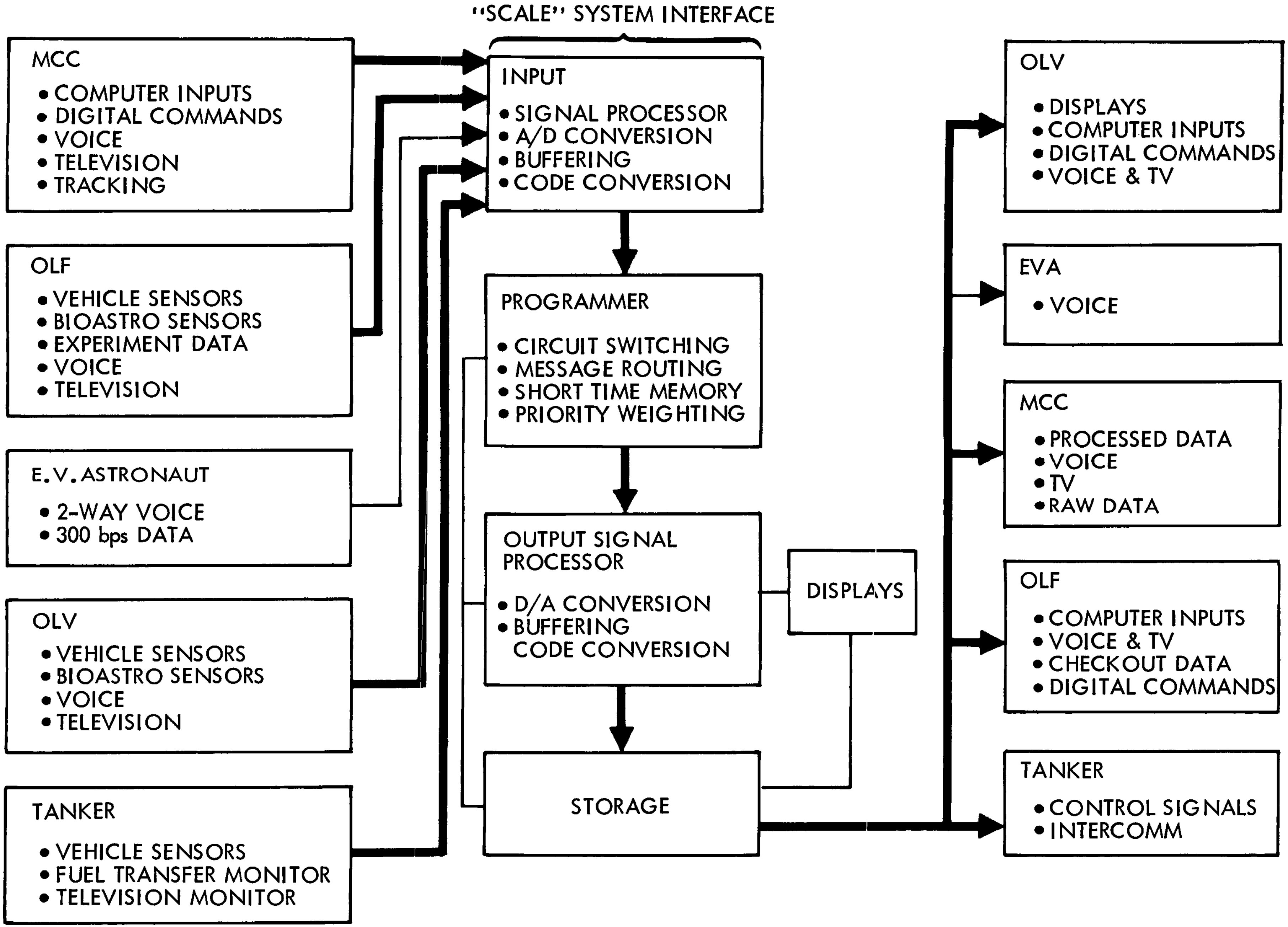

Figure 5.4-78: COMMUNICATIONS SYSTEM BLOCK DIAGRAM

LINK	USE	COMPONENTS	SIZE — IN.^{3}	WT — LB	POWER — WATTS
UNIFIED "S" BAND	VOICE	2 - TRANSCEIVERS			
		4 - CAMERAS	1200	36	
	TRACKING	2 - POWER AMPLIFIERS	540	60	70
	TV	2 - PREMODULATION PROCESSORS	600	29	22
	52.2 KBPS DATA	2 - DUAL TRANSPONDERS	2400	62	22
		2 - ANTENNAS	20" LONG	2	--
		1 - MULTICOUPLER	40	0.5	--
VHF/AM	VOICE	2 - TRANSMITTERS	100	4	50
		1 - MULTICOUPLER	400	3	--
		2 - ANTENNAS	24" LONG	2	--
		2 - RECEIVERS	100	6	10
50 MC	EXTRAVEHICULAR ASTRONAUT	4 - TRANSCEIVERS	200	8	8
		4 - ANTENNAS	20" LONG	2	--
INTERCOMM	WITHIN OLF	1 - MASTER STATION	200	2	8
		8 - SLAVE STATIONS	400	4	8
		4 - CAMERAS	1000	32	
		2 - MONITORS	1600	24	

Figure 5.4-79: OLF COMMUNICATION EQUIPMENT CHARACTERISTICS

command information. The binary ranging code is detected using a wide band phase detector. The resultant video range signal is combined with subcarrier outputs that have been modulated with the down link telemetry and voice signals. The resultant complex signal phase modulates the down carrier. When it is desired to transmit television, video is substituted for the ranging code for mixing with the subcarrier output. The composite signal in this case f-m modulates the down link carrier. A secondary approach is being studied that will provide for the simultaneous down transmission of two wide band data signals along with both ranging and television signals. This is accomplished by using two transmitting frequencies for the down link.

5.4.8.3.2 VHF Equipment. - The VHF equipment carried on board the OLF provides a voice and a narrow band (10 kilobits per second) data capability. These channels are provided by frequency modulating two subcarrier oscillators, combining, and then frequency modulating this carrier with the composite signal.

5.4.8.3.3 Antennas. - The OLF must have "S" band, VHF, and 50 mc whip antennas. Two of each of the above antennas were furnished in order to prevent antenna shadowing by the spacecraft. Antenna switching can be done automatically or manually.

5.4.9 Subsystems Summary. - The preceding subsystem design analyses represent the studies that have been completed for the design of the OLF on-board systems. The specific subsystems that have been evaluated and described are electrical power, guidance and navigation, attitude control and stabilization, environmental control/life support, crew support, checkout and monitoring, and data management-communications. Based on the study objectives, the MORL subsystems were used as a baseline design and the OLF requirements were imposed on this baseline. Appropriate design changes were then made and these are reflected in each recommended subsystem design. Significant utilization of the MORL subsystems was obtained but the following major changes are noted:

- Relocation of the isotope/Brayton cycle power unit into the hub section of the OLF.
- Addition of an Apollo inertial measuring unit for autonomous navigation.
- Adaptation of a Tapco Bosh oxygen regeneration system.
- Deletion of control moment gyros and relocation of attitude control thrusters.
- Implementation of a ground control network facility compatible with long term utilization characteristics.
- Integration of the space checkout and launch control equipment for purposes of OLF checkout, monitoring, and data management as well as the OLV.

5.5 Advanced OLF Concepts

The primary emphasis of the OLF study, as mentioned earlier, was directed toward the initial OLF concept to support a manned Mars/Venus flyby mission. Of secondary interest, however, was the consideration of OLF's to support more advanced planetary missions. The manned Mars landing and Lunar ferry missions were selected to provide the basis for the advanced OLF studies. A separate design concept was independently considered for each of these missions. The design approach taken was to modify the initial OLF by evolutionary changes to satisfy the requirements to support the advanced mission. By direction of NASA OLF contract supervision, the major advanced OLF effort was directed toward support of the manned Mars mission, with a lesser effort on an OLF for support of the Lunar ferry mission.

The OLF design criteria required to meet the orbital launch operations in support of the advanced missions were provided by the AOLO study. Criteria to meet routine operational requirements for the OLF proper, not related to orbital launch operations, were established as part of the OLF study. A ground rule mutually agreed to by Ling-Tempco-Vought, Boeing, and NASA was that three representative vehicle concepts would be considered for the Mars landing mission. The OLF was then designed to support any of the three concepts. As a result, for any particular design parameter it was necessary to design the OLF to meet the most severe criteria established by any of the vehicles. The OLF, therefore, had an overall capability greater than would have been required to support any single one of the three Mars landing vehicle concepts. The OLF design for support of the Lunar ferry mission, however, considered only a single mission vehicle.

In arriving at an advanced OLF concept, it was necessary that the requirements which the mission vehicle would impose on the OLF be definitely established. It was then possible, by comparing present OLF capabilities with advanced mission requirements, to determine the modifications or additional demands which would be placed on the baseline OLF. Figure 5.5-1 shows the required criteria for the major design parameters for three separate Mars landing mission concepts and the single Lunar ferry concept. Comparable criteria are also shown for the Mars flyby mission. In addition, where total capability of the initial OLF varies from the indicated criteria requirements, it is so noted. Though the scope of these criteria is somewhat limited, it is sufficient to establish whether the baseline OLF can be adapted to use in advanced missions. It should be noted that the baseline OLF has many capabilities not shown in Figure 5.5-1, which, though not sepcifically called out as advanced OLF requirements, are presumed to be such. Examples of this are the safety requirements, and atmosphere conditioning requirements.

A basic difference in mode was established for support of the advanced concepts. By direction of the AOLO study, the tankers and mission vehicle were not to be docked to the OLF during orbital launch operations as was the case with the initial OLF for the Mars flyby mission. This eliminates the need for the umbilical service tower and associated fluid storage tanks and related equipment, as well as the tanker and OLV docking parts and mechanisms, on both advanced OLF concepts. Since direct contact will not exist between OLF and OLV, movement of personnel, spares, and other equipment between these vehicles must be accomplished through the use of orbital support equipment.

5.5.1 Manned Mars Landing Mission. - The objective of this investigation was to determine how the initial OLF could be modified in an evolutionary manner to be able to support the Mars landing mission OLV. As previously mentioned, three separate vehicular concepts have been considered to perform this mission as noted in Figure 5.5-1. To determine whether the requirements could be met by the initial OLF design, each major criteria item in the table was considered in turn and initial OLF deficiencies noted where appropriate.

Crew -- The requirements vary somewhat with each OLV concept, the most severe demand being for a total crew of 16 for 30 days. As the initial OLF will accommodate 18 men for 15 days and 12 men continuously, it would appear that it would also be able to handle the 16 man crew for 30 days with little or no modifications to the environmental control and life support systems. Detail studies of these systems would need to be made, however, to determine their exact capability of accommodating the 16 man crew for 30 days. There is sufficient volume to house this number of personnel comfortably and the additional expendable required amount to a mass of approximately 370 kg. (815 lb) with adequate storage space. As will be noted, the full time crew required for routine OLF operations is estimated to remain the same as the initial OLF, at four people.

Spares -- The present OLV spares for the initial OLF call for storage of 1155 kg (2546 lbs). The maximum demand for the Mars landing OLV spares is for 2500 kg (5500 lbs). No problem is foreseen, as the enlargement of the spares storage area can be done with relative ease and the initial earth launch capability of the Saturn V booster will easily accommodate heavier OLF vehicles.

Docking Ports -- The Mars landing mission requires four Apollo-type docking ports. These are provided for in the initial OLF.

OSE -- The requirement for AMUs has been increased by four over the initial OLF. The RMU requirement remains the same at two. Adequate storage room is available for the additional vehicles and their propellant.

Checkout Equipment -- The requirement for checkout equipment has been increased by 422 kg (933 lbs). There is adequate room to house this additional equipment in the checkout equipment compartment in the MORL module.

Power -- The power demand for OLV checkout has increased by 0.9 kg. Although the power system aboard the initial OLF is used almost to capacity, it is felt that the existing system will be very close to being adequate for the increased requirements. In some areas the electrical load has actually decreased for the advanced OLF, such as that reduction due to the elimination of the umbilical. In any event, the system capacity is close enough to the load requirements that a detailed analysis is required. Were it necessary, an additional on board power unit could easily be added.

Tools -- 156 kg (345 lbs) of additional tools are required. The additional storage space can be easily supplied.

Hangar Mechanisms -- The present initial OLF mechanisms are adequate.

MANNED PLANETARY AND LUNAR MISSION REQUIREMENTS

ITEM	MARS FLYBY	[1] DOUGLAS MARS LANDING	[2] MARTIN MARS LANDING	[3] G. D. MARS LANDING	[4] LUNAR FERRY
CREW (Max)	13 for 11 days*	16 for 30 days	15 for 20 days	16 for 30 days	10 continuous
SPARES (for OLV)	1433 kg (3160 lbs)	1820 kg (4000 lbs)	1270 kg (2800 lbs)	2500 kg (5500 lbs)	354 kg (799 lbs)
DOCKING PORTS:					
Logistic Spacecraft	4	4	4	4	4
Lox Tankers	1	0	0	0	0
Orbital Launch Vehicle	1	0	0	0	0
OSE:					
RMU	2	2	0	2	2
AMU	4	8	4	5	4
OSAV	0	0	0	0	1
CHECKOUT EQUIPMENT - OLV Support	182 kg (400 lbs)	915 kg (2015 lbs)	734 kg (1615 lbs)	1115 kg (2450 lbs)	536 kg (1180 lbs)

Figure 5.5-1: MANNED PLANETARY AND LUNAR MISSION REQUIREMENTS

MANNED PLANETARY AND LUNAR MISSION REQUIREMENTS

ITEM	MARS FLYBY	▷1 DOUGLAS MARS LANDING	▷2 MARTIN MARS LANDING	▷3 G. D. MARS LANDING	▷4 LUNAR FERRY
POWER - OLV SUPPORT	1.4 kw	2.2 kw	1.86 kw	2.3 kw	1.48 kw
TOOLS - OLV SUPPORT	34 kg (75 lbs)	181 kg (400 lbs)	150 kg (330 lbs)	191 kg (420 lbs)	118 kg (260 lbs)
HANGAR	1.4 M^3** (47 ft^3)	2.0 M^3 (67 ft^3)	.6 M^3 (20 ft^3)	1.5 M^3 (52 ft^3)	114 M^3 (4000 ft^3)
HANGAR MECHANISMS					
RMU	1	1	1	1	1
OSAV	0	0	0	0	1
COLD FLOW TEST FACILITY	0	0	0	0	1

* Capability of 12 full time or 18 for 14 days.

** Available space 437 M ^{3}(15,400 ft^3) part of which is needed for Apollo service periodically.

▷1 Recommended concept of Ref 17

▷2 Recommended concept of Ref 18

▷3 Recommended concept of Ref 19

▷4 Recommended concept of Ref 20

Figure 5.5-1: MANNED PLANETARY AND LUNAR MISSION REQUIREMENTS (CONTINUED)

In reviewing the changes required in the initial OLF to support the manned Mars landing mission, it can readily be seen that no major design changes are required in the OLF configuration. In fact, primarily due to the OLV and tankers no longer docking to the OLF, it is possible to simplify the advanced OLF by eliminating the service umbilical tower and the large OLV and tanker docking ports. Thus it is obviously feasible to modify the initial OLF to accommodate the Mars landing mission. At the same time, it was possible to make certain additional changes in the initial OLF design which further simplified or improved the basic concept.

A comparison of the OLF developed to support the manned Mars landing, as shown in Figure 5.5-2, with the initial OLF, as shown in Figure 5.3-1, reveals that the major differences lie in structural cylinder length, the hub arrangement, removal of the umbilical tower, and positioning of the elevator tubes. This rearrangement, made possible by the elimination of the tanker and OLV docks, permits a launch configuration some 3.05 m (10') shorter. The structural cylinder has been lengthened slightly and the hub has been placed 1.22 m (4') off center. This allows a further retraction into the cylinder by MORL No. 1 than was previously possible, thereby reducing the launch configuration length. However, to maintain the overall length of 54 m (177'), it has become necessary to lengthen the skirt of MORL No. 2. The desired overall length is achieved when deployed, and the hub is on the center line or spinning axis of the OLF.

In the new configuration the elevator tube telescopes for launch, and in the deployed condition provides a continuous passage from one MORL to the other. Access to the hub is through a normally open hatch, with the tubes and hub being maintained at the same pressure (7 psia). Specific details of the design include:

Structural Cylinder -- The structural cylinder has been lengthened by 1.07 m (3.5') to 29.72 m (90.6') and is similarly constructed of a corrugated aluminum structure. The frames and corrugations are outside the pressure skin to allow a smooth working interior; meteroid protection is obtained by three aluminum shields. The radiator for the nuclear power plant is located near the center section of the cylinder. Enclosed within the cylinder are the hub, experiment bay, and the hangar bay. The elevator system runs through all three compartments and provides mobility and a shirt sleeve environment for men and materials within the OLF.

Experiment Bay -- The nuclear (isotope) power plant, together with the necessary gas loop removal mechanism, has now been located in the experiment bay rather than in the hub as in the initial OLF. In other respects, except for a slight increase in length, the design and operation of the experiment bay is essentially the same as on the initial OLF.

Hangar Bay -- This bay is identical to that of the initial OLF, including doors and mechanisms. Design and operation remain the same as for the initial OLF.

Hub -- The hub, though off center of the structural cylinder by 1.22 m (4'), is symmetrically located about the center of the OLF when deployed. It consists of one instead of the two hub compartments provided on the initial OLF concept. It is pressurized at 7 psia, with two Apollo docks for logistic spacecraft. A three-way airlock has been located in this section which permits entrance to either of the bays or exit into space for extravehicular activities. A hatch is provided for access into the elevator tube which runs through the hub. Spares storage volume of 8.5 m^3 (300 ft^3) is provided.

1

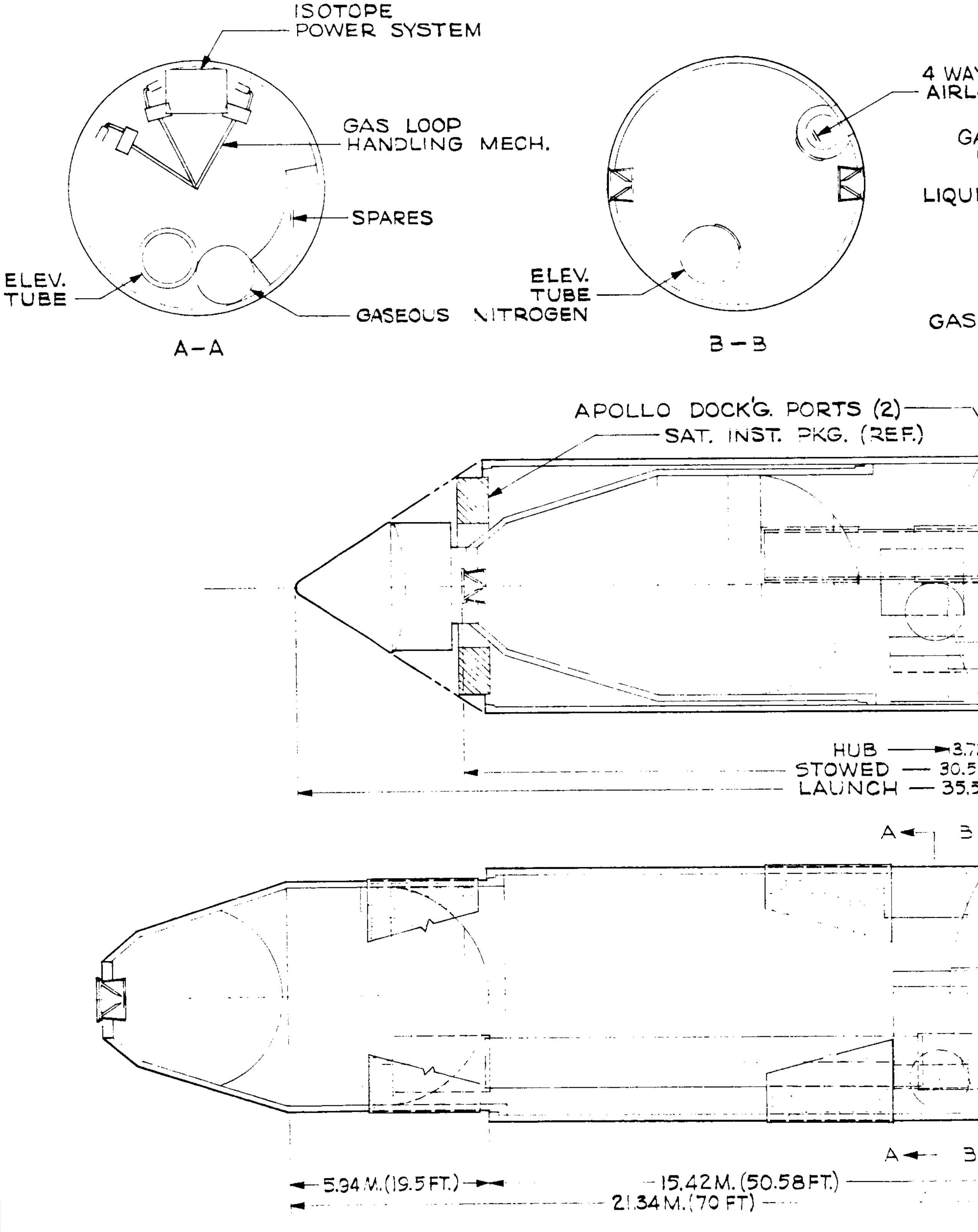

NOTE – SEE DWG. 25-53675 (ORBITAL LAUNCH FA

2

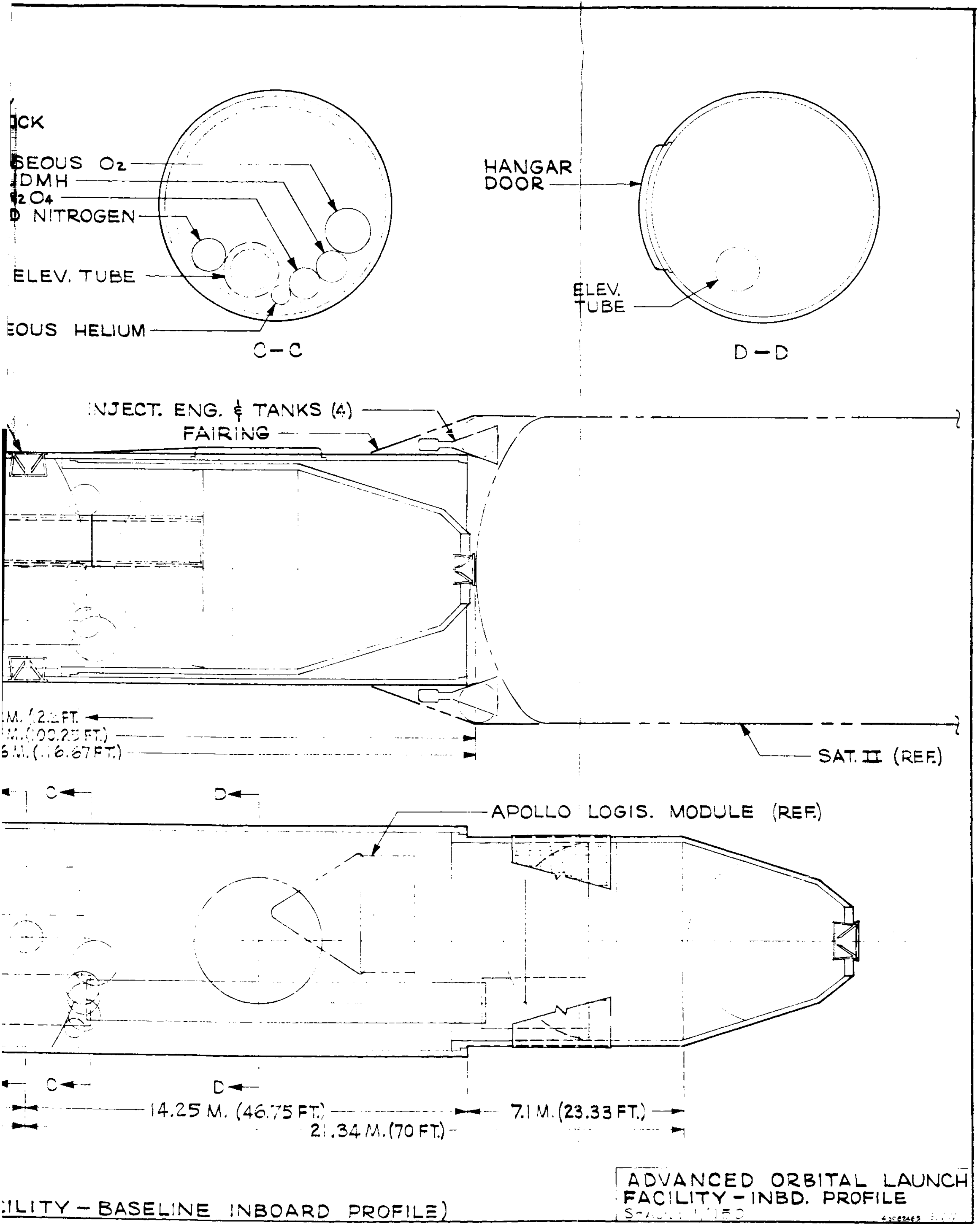

Figure 5.5-2: ADVANCED OLF

Elevator Tube -- This tube is 1.53 m (5') in diameter and connects to both MORL airlocks. It telescopes in the launch configuration and is extended in the operational configuration. It is a sealed tube which is maintained at 7 psia, with an entrance hatch to the hub at the center point. In case of damage to the hub the hatch may be closed and transfer between MORLs maintained in a shirtsleeve environment.

MORLs -- Both MORLs remain unchanged except for MORL No. 2, on which the skirt has been lengthened to allow the extended OLF to attain a length of 54 m (177'), which provides the same artificial gravity in the spin mode as the initial OLF.

Launch Configuration -- By the rearrangement of the hub and the change in skirt length of MORL No. 2, a launch length decrease of 3.05 m (10') has been obtained. In other respects it is similar to the initial OLF and no additional details are provided. The assembly and checkout functions are also similar and are therefore not discussed further at this time.

A detailed statement of the advanced OLF mass cannot be made until a mass analysis is performed. It is expected, however, that the mass will probably decrease from that of the initial OLF, based on preliminary estimates. A reduction in mass has been realized due to elimination of the OLV and LOX tanker docks and the umbilical boom. Some mass has been added however, to take care of added equipments. Figure 5.5-3 estimates the mass differences between the initial and advanced OLF for major items. A plus or a minus sign indicates an increase or decrease of mass from the initial OLF. A net reduction is shown for the advanced OLF of 5870 kg (12936 lbs) under the initial OLF mass.

In summary, an OLF has been developed for the manned Mars landing mission which has some distinct advantages over the initial OLF. These are permissible primarily by virtue of the change in operational mode away from the OLV tanker docked to OLF concept which allows a less complex OLF to provide the required mission support. Among the advantages are a lesser mass, shorter launch configuration, and less complexity (i.e. no umbilical etc.)

5.5.2 Reusable Lunar Ferry. - As mentioned earlier, the manned Mars landing and Lunar ferry OLF investigations were independently approached but in each case evolution from the initial OLF concept was assumed. Figure 5.5-1 shows required criteria for the major design parameters for the Lunar ferry concept as well as the Mars landing concept. A review of these parameters shows that the criteria for the Lunar ferry mission is well within the initial OLF capability in most cases, and is generally less demanding than that for the manned Mars landing mission.

Two new requirements are introduced by the Lunar ferry mission, however, which were not necessary on either the Mars flyby or Mars landing missions. These were brought about primarily because of the use of a reusable nuclear engine aboard the Lunar ferry OLV.

The first requirement was for an orbital support assembly vehicle (OSAV) as part of the OSE aboard the OLF. This introduces a need for greater hangar space than was needed when the OSE consisted only of RMU's and AMU's, and for a mechanism which could receive the OSAV at the hangar door and stow it within the hangar similar to the comparable equipment on the initial OLF which stows the Apollo in the hangar for maintenance. No particular problem is anticipated in connection with the OSAV requirement. While the need for hangar space has increased to some 115 cubic meters, the initial OLF hangar has some 437 cubic meters available. The OSAV stowage mechanism should present no major problem. While no such mechanism has been designed for the Lunar ferry OLF, it was felt that a serious attempt should be made to adapt or modify the Apollo stowage mechanism in such a way that it could handle both the Apollo and the OSAV. This might require certain minor modifications to the OSAV.

The second requirement was to provide a cold flow test facility at the OLF to test replacement engines for the Lunar ferry OLV. This would involve at least a test platform or stand and a storage tank to provide the fluid for the cold flow test, but would not involve storage of the spare engine which would be delivered by logistic vehicle from Earth when needed. While a design exercise was not conducted on this problem, several considerations immediately came to mind. A test stand would be required which would probably provide for the test to be performed outside but attached to the OLF facility. The test stand might be permanently installed in its location outside the facility, or might be retractable into the hangar for stowage when not actually programmed for use in cold flow testing. In either event, it was expected that at earth launch of the OLF, the test platform would be in a knocked down or kit form, and that one of the OLF operations during original checkout and deployment would be erection and assembly of the test stand. During test setup operations it was expected that the OSAV would maneuver the test engine and handle its installation into the test stand. A requirement during the actual test runs was the incorporation of some type of device which would nullify the thrust produced by the engine so that the attitude or orbital position of the OLF would not be affected. While a detailed test plan was not made, it was felt that the necessary test data management could easily be handled by the checkout equipment already aboard the OLF. The other major requirement for cold flow test equipment, in addition to the test stand, was a storage tank for the cold flow test fluid. Ample room was available in either the experiment or hangar bays for this tank.

In summary, the OLF for the Lunar ferry mission may be easily evolved from the initial OLF. Like the manned Mars landing OLF, it has no requirement for an umbilical tower or for OLV or tanker docking ports and mechanisms. However, it does have the added requirements brought about by the OSAV and cold flow test facility. Otherwise the design criteria for the Lunar ferry OLF are actually less demanding than for the Mars landing OLF. As mentioned earlier, the initial OLF will accommodate the OSAV and cold flow test equipment, and it should be noted that the OLF developed for the Mars landing is also capable of accommodating that equipment. It is recommended, therefore, that the Mars landing OLF be the basis for the Lunar ferry OLF, which will then require only those added modifications to handle the OSAV and engine cold flow test facility to be completely qualified to support the Lunar ferry mission.

5.5.3 Composite Design. - While the advanced OLF study did not consider a composite or multipurpose design, the results certainly suggest the feasibility of this approach. In considering the three OLF concepts to support the Mars flyby, Mars landing, and Lunar ferry missions respectively, certain design criteria turn out to be quite nearly common to all three OLF concepts, or if the criteria are not quite common, at least the basic OLF design will accommodate the spread in criteria. An example of this is the use of two MORL modules in the basic design which readily accommodate up to 12 crewmen full time or 18 for two weeks.

The Mars landing OLF includes only these common types of criteria while the Mars flyby and Lunar ferry OLF's have some unique requirements. In the case of the initial OLF, due to the OLV and tanker docking mode during orbital launch operations, the unique requirement for an umbilical tower and OLV and tanker docking ports exists. For the Lunar ferry OLF the unique requirements are to provide for an OSAV and engine cold flow test facility.

As pointed out in the advanced OLF discussions, the initial OLF with minor modifications could accommodate all the requirements for the advanced OLF's, including space for the OSAV and engine cold flow test facility required by the Lunar ferry OLF. The main advantage to an advanced OLF design lay in the simplification possible due to elimination of the umbilical and OLV and tanker docking ports; however, the advantages of the composite design may outweigh the advantage of a separate advanced OLF design. First, the composite design is feasible. Second, the developmental problems and costs of one design, although slightly more complex, should be less than for two separate designs even where the second one is an evolution of the first. Third, there should be a good possibility that a single OLF piece of hardware may be designed and built with a sufficiently long life span to support the complete spectrum of missions from early planetary flybys to manned Mars landings.

It is therefore recommended that future studies of advanced OLF concepts consider the feasibility of a composite design to support multiple types of missions.

FIGURE 5.5-3 ADVANCED OLF WEIGHT SUMMARY

ITEM	MASS DIFFERENCE	
	kg	lbs
Crew Expendables	370	815
Spares for OLV	1067	2350
Docking Ports (1 LOX, 1 OLV)	-2720	-6000
Umbilical Servicing Boom	-454	-1000
Plumbing & Tankage	-2500	-5500
OLV Gaseous & Fluid Supplies	-2600	-5737
OSE	321	708
Checkout Equipment	442	933
Hangar Mechanisms (OSAV)	250	550
Airlock to OLV	-182	-400
Tools - OLV Support	156	345
TOTAL	-5870	-12936

6.0 SPECIAL STUDIES

6.1 Gravitational Level Analysis

The purpose of the gravitational level analysis is to determine the requirement for or the desirability of providing an artificial gravity capability to the OLF. In order to do this, it will be necessary to analyze all activities to be performed in the initial OLF to determine gravity restrictions, if any, imposed by each activity. As a secondary objective, the need or desirability and degree of artificial gravity required for the R&D scientific experiments to be performed aboard the initial OLF will be evaluated, and recommendations for a gravity level for each provided.

Artificial gravity requirements from a biomedical standpoint will not be considered in this analysis, as the psychophysiological responses to prolonged unrestrained weightlessness are a subject of research being conducted by other organizations. The effect of weightlessness on personnel is, therefore, considered only from the point of view of their capability of performing functions such as maintenance, repair, movement of supplies, etc. while in orbit,independent of the effect of zero gravity on man himself.

6.1.1 Approach. - In assessing the requirements for artificial gravity of the OLF, it is apparent that two main aspects must be considered. First, the effect that zero gravity and/or artificial gravity has on man's ability to perform, and secondly, the effect on equipment.

The approach in this analysis is to categorize all possible tasks or functions which will be performed in the initial OLF and to analyze each to determine gravity effects. In those cases where lack of gravity has an adverse effect, a desired gravity level will be established and a substitute for gravity suggested. An example of this is man's performance of maintenance tasks in a weightless and frictionless environment. Any force applied by man results in translational and/or angular acceleration that will be distributed between man and the object to which the force is applied. If a force of 200 newtons (45 lbs.) were exerted on a .30 meter (1 ft.) wrench handle for one second about a man's longitudinal axis, the man would attain an angular velocity of five revolutions per second. The problem presented by such angular velocity prevents the man from performing a useful task. A solution for this problem resulting from the absence of gravity would be that of equipping the man with a restraining harness.

The approach to the second aspect of this analysis is to categorize all the initial OLF systems, subsystems, and critical components and analyze each to determine gravity effects. In those cases where either lack of gravity or artificial gravity has an adverse effect, a desired gravity level will be established, and either a substitute for gravity or an artificial gravity solution will be suggested. An example of this is the guidance and navigation system, which contains equipment such as the inertial measuring unit, sextant, telescope, horizon scanner, etc., and these components require a stable platform mounting. On a rotating OLF, this would mean additional equipment for this system and additional development time to provide the added equipment. A solution to providing the stable platform would be mounting these components on a non-rotating central hub; such a non-rotating hub would be necessary for other activities required on the

OLF such as docking of the Apollo CM, OLV, LOX tankers, etc. The use of such a non-rotating hub as a mounting base for these components of the guidance and navigation system reduces the problem to the same level of complexity required if the OLF were not rotated.

6.1.2 Operations Analysis. - The approach to the Gravitational Level Analysis has been discussed in Paragraph 6.1.1 and, as noted therein, two major areas of investigation in gravitational requirements were to be conducted. The first area of investigation was that of man's performance in accomplishing the necessary activities aboard the initial OLF. The discussion in Paragraph 6.1.2.1 covers this area. Operation of the initial OLF systems, as to their requirements for or problems encountered by artificial gravity, is discussed in Paragraph 6.1.2.2, which covers the second area of the investigation. Paragraph 6.1.2.3 provides a classification grouping of the activities and systems, indicating those activities and systems requiring common levels of gravitational requirements. A final analysis, Paragraph 6.1.2.4, contains a breakdown of gravitational level requirements for the R&D scientific experiments planned for performance aboard the initial OLF.

6.1.2.1 Activities Analysis. - The activities analysis is a study of the capabilities of man to perform those activities required on the initial OLF, and the gravitational level required or desired for each of these activities.

Man's Performance in Zero-g. - While considerable research has been done on determining man's performance in a frictionless environment, most of it has been limited to experiments using simulators such as air bearing rotating platforms, which allow determination of man's moment of inertia about several axes; the effect of weightlessness on gross motor performance and equipment handling has been simulated by providing neutral bouyancy when the subject is immersed in a very large tank of water. To date, scant information is available regarding man's performance while in actual zero-g environment, so that this analysis will necessarily be largely based on Earth experiments. This does not appear to be a major shortcoming as the analysis is oriented towards mechanical performance capabilities and does not consider biomedical aspects such as possible disorientation. It is true, however, that in order to perform in a weightless environment, man must be in sufficient command of his senses to allow him to function efficiently, and it is, therefore, impossible to fully separate biomedical considerations from mechanical performance.

For the purposes of this analysis, it has been assumed that there exists no physiological reason which detracts from man's ability to perform in-space functions. An evaluation of the various United States' orbital flights indicates that the pilot was able to perform space flight functions not only within the tolerance required for successful completion of the mission, but within performance levels demonstrated in trainers on the ground at optimum environmental conditions. It has now been pretty well accepted that performance data was essentially in keeping with previous experience with manned aircraft flying zero-g trajectories. Both American and Russian astronauts agree that there were no disorientation symptoms while weightless, in spite of voluntary, violent head movements. The location of controls and other objects within the cabin was always known in relation to the astronaut's position, even though instruments were caged and the relationship of the spacecraft to Earth was unknown. In one of the Russian space flights, the astronaut left his seat and floated in the cabin. He found that he could move without difficulty in the atmosphere and that it was sufficient to touch the capsule walls with his fingers in order to change position. From the above, it appears that space flights are no more physiologically demanding than other non-space oriented flights.

In determing the desirability of providing artificial gravity to the OLF, the results of numerous experiments, both in low friction devices and in tanks providing subjects with neutral bouyancy, have been evaluated and compared to what has been found in actual flight. Generally speaking, it has been found that the predictions of properly devised and conducted Earth experiments have been confirmed in actual flight, and the zero-g analyses has, therefore, been based on information obtained in these experiments. The major considerations were the following:

Moment of Inertia. - In a zero gravity -- wherein man is weightless and without friction -- any force applied by man who is not anchored, results in a translational and/or angular acceleration that will be distributed between the man and the object to which the force is applied. Experiments indicate that man's moment of inertia is approximately 1.02 kg-m^2 (0.75 slug-$feet^2$) about a longitudinal axis, and as much as three times greater about the other two mutually perpendicular axis. These measurements allow a calculation of man's performance in low or zero gravity conditions.

Personal Propulsion

a. Shirtsleeve Environment. - Gross bodily movement from one point to another is facilitated tremendously by the absence of gravity, but can easily result in tumbling or spinning. However, with a little practice, as evidenced from a Russian astronaut's report, no problem should occur in moving short distances. For longer distances, however, hand-holds should be provided to allow for continuous directional correction.

b. Space Environment. - Outside the spaceship, the facility for making large movements very rapidly and with little effort becomes somewhat of a problem. Initial inaccuracies in "jumping off", which are of little consequence in confined quarters will, over longer traverses, result in missing the desired landing point or body attitude by large amounts. It is apparent that long traverses outside spacecraft will best be accomplished using a guide rope or hand-hold and by using a reaction "gun" or an AMU to move in space.

Application of Forces

a. Untethered. - To determine the effects of zero-g on maintenance, various experiments were made to determine the ability of individuals to apply force during near frictionless conditions. In all cases one hand was used to apply the force or torque, while stabilization was maintained with a hand-hold. The results indicated the degree of decrement experienced in a near frictionless condition; even with a hand-hold it was impossible to sustain any force while frictionless. However, if there is no requirement for a continuous application of force, a very different picture of performance capability is revealed. It was found that by applying a force momentarily very high results can be obtained before the reactance force overcomes the body's inertia, and that the reactance was then absorbed slowly by the hand-hold. An example of this would be to exert a quick push on a wrench handle and to then hold on to the handle while slowly extending the arm in order to absorb the reactance. In neutral buoyancy experiments, it noted that the operator accepted with ease the need to "hold on" to prevent drift and aborting reactance. Generally, one or the other hand was used without giving the matter conscious thought. Where both hands were needed, or where visual requirements precluded holding on continuously with one hand, it was always possible to clamp a part of the structure being worked on between elbow and torso or between the legs, or to wedge the body to maintain either the relationship or counterforce required.

Figure 6.1-1 shows a relationship between forces as applied in friction, near frictionless, and impulse conditions.

FIGURE 6.1-1 MAN'S FORCE PRODUCING CAPABILITIES

FUNCTION	MEAN FORCE OR ENERGY APPLIED		
	FRICTION	NEAR-FRICTIONLESS	IMPULSIVE
Push	326 newtons (73.4 lbs.)	21.3 newtons (4.8 lbs.)	422 newtons (95.0 lbs.)
Pull	272 newtons (61.1 lbs.)	10.3 newtons (2.31 lbs.)	527 newtons (118.4 lbs.)
Compression	456 newtons (102.6 lbs.)	491 newtons 110.3 lbs.)	- - -
Extension	416 newtons (93.7 lbs.)	410 newtons (92.3 lbs.)	- - -
Torque - Push	64.4 joules (47.5 ft. lbs.)	22.6 joules (16.7 ft. lbs.)	58.8 joules (43.3 ft. lbs.)
Torque - Pull	56.5 joules (41.7 ft. lbs.)	34.8 joules (25.7 ft. lbs.)	49.5 joules (37.5 lbs.)

b. Tethered. - In applying a force for any considerable length of time, some sort of restraint is required. For minor force application ranging up to 22.3 newtons (5 lbs.), it has been established that a hand-hold would suffice, or possibly a toe-hold rail such as found on boats. For greater forces, however, some other anchoring device, such as a harness is mandatory.

Initial OLF Activities. - Activities required aboard the initial OLF that must be accomplished by man with the OLF in orbit are grouped under two major headings, with these headings defined by the environment under which the various activities must be performed: Space Environment Activities, which includes all activities that must be performed outside the OLF; Shirtsleeve Environment Activities, which includes all activities that are performed inside the OLF, including those accomplished in areas of low pressurization where supplemental breathing oxygen is required while performing the activity. Certain activities under the foregoing heading are in reality subheadings of individual activities required for the performance of a given task; these subhead activities were further divided into individual activities whenever such division was necessary to properly evaluate variations of activities with the task.

Figure 6.1-2 contains the results of the study of the OLF activities and indicates the desirability of providing artificial gravity and the problems encountered as a result of either providing or not providing artificial gravity.

Some of the activities shown in Figure 6.1-2 will require performance only once in the life of the initial OLF, such as items I.a.2, 3, and 4. Further, these activities would all have to be performed prior to rotation of the OLF to produce artificial gravity since no power would be available for rotation until these activities have been completed. Without power available for rotation, and since the rotation would be undesirable at the time these tasks must be performed, the use or lack of use of artificial gravity on the OLF would not affect these activities.

A second group of activities for which artificial gravity is undesirable includes those which are in a general category of docking operations, such as items I.a.1, I.c, I.d.1., 2, 3, and 4 and a portion of item I.b.3. If artificial gravity is provided in the initial OLF, it will be necessary to stop the OLF rotation in order to perform any of these activities with any degree of safety and without using large amounts of propellants by the docking vehicle. In considering the time required to perform each of these activities, the number of times each activity would have to be performed during the life of the OLF, and the low probability of performing more than one of these activities during the same time period, it is apparent that OLF rotation for artificial gravity would not be permitted during sizeable percentage of the total life. The resulting low time during which artificial gravity could be used and the propellant usage required to accelerate and deaccelerate the OLF each time one of these docking activities must be performed, greatly reduces the desirability of providing the equipment necessary to produce the artificial gravity in the initial OLF.

The remaining activities shown in Figure 6.1-2 for which artificial gravity is undesirable are items I.b.1. and 2; these activities, when combined with the remaining part of item 1.b.3., include all the extravehicular maintenance activities. The problems encountered by performing these activities under conditions of OLF rotation are the required restraining of man, tools, and parts to prevent them from drifting from the OLF. If the OLF is not rotated, the restraints are still required, however, the forces resulting from man's motion and work causing separation from the non-rotating OLF may be less than for the rotating OLF. Restraints for man and most of the tools must be sized so that the required work forces may be applied to the OLF or its systems components, and in most cases the

ITEM NO.	ACTIVITY	FREQ.	DESIRED LEVEL	EVALUATION
I.	SPACE ENVIRONMENT			
a.	Assembly and Checkout			
1.	Separation & Docking of Apollo Command Module (CM)	1/30 day	0	OLF rotation for artificial gravity will complicate this operation and result in excessive expenditure of CM propellants in matching OLF rotational motion, as well as increasing danger of damage to both the CM and OLF, due to alignment difficulty during docking and/or separation.
2.	Extension of MORLs.	once at initial setup	0	Extension is to be performed by pressurizing experiment and hangar bays. Presence of artificial gravity will cause difficulty in controlling the extension rate of the MORLs.
3.	Deorbit of Apollo CM fairings and injection stage.	once at initial setup	0	Artificial gravity will complicate this operation as it would necessitate transferring the fairings first "uphill", then "downhill".
4.	Installation and Checkout of	once at initial setup	0	Rotation of OLF during performance of these operations will add to the difficulty of the operation, as both personnel and parts would tend to separate from OLF unless restrained.
b.	Maintenance and Repair			
1.	Scheduled Maintenance (subsystem checkout and scheduled component replacement).	as scheduled	0	Rotation of OLF during performance of these operations will add to the difficulty of the operations, as both personnel and parts would tend to separate from OLF unless restrained.
2.	Unscheduled Maintenance (Repair)	as scheduled	0	Rotation of OLF during performance of these operations will add to the difficulty of the operations as both personnel and parts would tend to separate from OLF unless restrained.

Figure 6.1-2: GRAVITY REQUIREMENTS FOR OLF ACTIVITIES

ITEM NO.	ACTIVITY	FREQ.	DESIRED LEVEL	EVALUATION
I.b.3.	Orbital Support Equipment (OSE) Operations	as required	0	Rotation of OLF will make OSE maneuvers more difficult and result in an increase use of OSE propellants.
c.	Docking Operations	6/OLO plus 1/90 day	0	Rotation of OLF for artificial gravity during docking of OLV, LOX tankers, logistic vehicles, etc. will add to the difficulty of these operations, as the docking vehicle would have to match OLF rotational speed prior to docking, resulting in an increase use of vehicle propellants.
d.	Orbital Launch Operations			
1.	Boom Extension	1 to ea. vehicle/ OLO	0	Rotation of OLF during this operation will add to the difficulty of performance, as both personnel and equipment tend to separate from OLF.
2.	LOX Transfer	1/OLO	0 to 1	For the initial OLF the LOX tankers, OLV, etc. will be docked on the OLF rotational axis and LOX transfer will be accomplished by a pressurization system, so that OLF rotation would not affect the LOX transfer action.
3.	OLV Separation	1/OLO	0	Rotation of the OLF for artificial gravity will result in the OLV being in a spinning mode at time of separation, requiring an expenditure of OLV propellants to stabilize its attitude.
4.	OLV and LOX Tanker Checkout		0	These activities are OSE Operations and present the same conditions noted for OSE Operations under maintenance and repair.

Figure 6.1-2: GRAVITY REQUIREMENTS FOR OLF ACTIVITIES (CONTINUED)

ITEM NO.	ACTIVITY	FREQ.	DESIRED LEVEL	EVALUATION
II.	SHIRTSLEEVE ENVIRONMENT (All activities inside OLF, including those in areas required supplemental breathing oxygen)			
a.	Installation and Checkout			
1.	Assembly of Subsystems a. MORL to central cylinder locking mechanisms b. MORL to central cylinder tube seals c. Install elevator tube structural supports d. Other mechanical subsystems	once at initial setup	0 to 0.1	While no stringent requirement exists for gravity during the performance of these operations, a low level of gravity will be beneficial in that objects would not float away. A high gravity level will add to the difficulty when large, heavy parts have to be moved.
2.	Checkout of System a. Electrical power b. Guidance & navigation c. Attitude control & stabilization d. Environment control e. Life support f. Checkout & monitoring g. Data Management	Once at initial setup	.035 to 1.0	During checkout operation, checklists, report forms, etc. will be required to guide checkout and record data. Without artificial gravity, this material would tend to float away unless restrained.
b.	Routine Operations a. Standing watch b. Recording data c. Monitoring displays d. Earth communications e. Alerting crew for maintenance as required.	Continuous	.035 to 1.0	During routine operations of standing watch recording data, monitoring displays, etc. a small gravity gradient is desirable as this will permit laying down objects without the necessity of anchoring them.
c.	Housekeeping	Continuous	.035 to 1.0	A small gravity gradient would be beneficial during cleaning and general tidying up. Without gravity everything will float about, making the collection of dust difficult and requiring all other objects to be anchored.

Figure 6.1-2: GRAVITY REQUIREMENTS FOR OLF ACTIVITIES (CONTINUED)

ITEM. NO.	ACTIVITY	FREQ.	DESIRED LEVEL	EVALUATION
II.e.	Leisure	Continuous	Desirable 0.1 to 1.0	Card playing, reading, conversation, etc. would be more relaxing in an environment with some positive level of gravity.
f.	Personal Hygiene	Continuous	0.1 to 1.0 desirable	Shaving, dressing, bathing, etc. can be more easily accomplished in an environment with some positive level of gravity.
g.	Maintenance and Repair			
1.	Scheduled Maintenance	Continuous	Desirable 0.1 to 1.0	Artificial gravity will provide definite advantages for all scheduled tasks. Those tasks include the use of manuals, check-lists, tools, or other pieces of equipment, which without gravity must be anchored to prevent their floating away.
h.	Unscheduled Maintenance (Repairs)	Continuous as req'd.	0.1 to 1.0	Artificial gravity would provide definite advantages for all unscheduled tasks. Gravity makes the use of tools easier by improving the force levels that man can exert. With gravity, tools and other pieces of equipment do not require anchoring. During any removal and replace action, some chips or particles will be dislodged, and without gravity, will float and land at any random point, causing possible shorts or contamination. With gravity, these particles will drop to the "bottom" of the equipment, where they can be vacuumed periodically.

Figure 6.1-2: GRAVITY REQUIREMENTS FOR OLF ACTIVITIES (CONTINUED)

working forces are many times greater than the separation forces for either the rotating or non-rotating OLF.

All activities performed inside the OLF, with the exception of item II.a.1. of Figure 6.1-2 would be simplified or performed in a more nearly Earth-like environment with artificial gravity. In the case of nutrition the lack of gravity makes it advisable that all foods be supplied in the form of a common paste condition, while with gravity, food could be used in more normal Earth-like forms. Some difficulties would be apparent with all these activities for men first entering the OLF with artificial gravity from the effects caused by Coriolis acceleration, however, in a properly designed OLF these problems will soon disappear as man learns to tolerate these effects. In the initial OLF certain activities are seriously complicated by the presence of rotation for artificial gravity. For example, if the OLF is rotated during docking operations, the amount of propellant that will be required by the docking vehicle will be greatly increased; therefore, during docking activities and certain other operations, the OLF rotation would have to be discontinued until these operations are performed. If artificial gravity could be maintained throughout the life of the OLF, then the need to provide tethering provisions for everything not built into the OLF would not be required; however, in the initial OLF, where at the best it will be feasible to provide artificial gravity only on a part-time basis, everything must be maintained in a tethered condition at all times. The advantages of providing artificial gravity for the performance of these "shirtsleeve activities" can not be utilized in any OLF design that does not provide for constant artificial gravity for its entire life. The activities shown in Figure 6.1-2, as item II.a.1., must be performed prior to the time that power could be made available to rotate the OLF. These activities would have to be performed in the same manner with or without artificial gravity, therefore they do not affect provisioning of artificial gravity on the OLF.

The level of artificial gravity which should be provided aboard the OLF would be determined largely by the effects that rotation of the OLF to produce the artificial gravity would have on man. Rotational velocities and rotational radii must be sized to obtain the highest level of artificial gravity with the minimum of undesirable side effects, without making vehicle size beyond what may be reasonably placed in orbit. A large number of studies have been performed in an effort to establish the parameters for the most desirable gravity levels and craft configuration required to produce these gravity levels (Reference 21). The most desirable level would be as close to Earth gravity (1g) as possible, with gravity levels of less than approximately 3.5% of Earth gravity (.035g) not providing a useful amount of gravity effect.

Angular velocities in excess of 4 R.P.M. are considered unacceptable because of vestibular limitations. The rotational velocity also provides a limiting parameter due to the effect of Coriolis acceleration. Coriolis acceleration causes an apparent change in the level of gravity from that experienced while standing still and that experienced when moving. Motion in the direction of rotation of the spacecraft causes an increase in the level of the gravity gradient, while movement in a direction opposite to the rotation of the craft causes a decrease in the gradient level. Motion toward the center of craft rotation (climbing uphill) causes an acceleration in the direction of craft rotation while motion away from the center of craft rotation (climbing downhill) causes an acceleration in the opposite direction to craft rotation. When the change in gravity levels between standing and moving exceeds 10 to 15 percent of the level while standing, then this change is considered unacceptable for routine living and working activities. However, Coriolos acceleration forces in the order of 100 percent of the artificial gravity force are considered acceptable when moving into or away from a non-rotating central hub. To restrict the gravity gradient change in the living and normal work areas to 10 to 15 percent will require a rotational velocity of 6.1 meters per second minimum, (20 feet per second) and this velocity coupled with the 4 R.P.M. maximum angular velocity requires that the minimum useable radius is 15.5 meters (50 feet). This 15.5 meter (50-foot) radius is the minimum required for a man's head if the 4 R.P.M. velocity could be held without variation; also, a minimum of about 1.83 meters (6 feet) over the 15.5 meters (50-foot) radius must be allowed for the man's height. Combining these factors with size limitations on placing a spacecraft in Earth orbit, the most desirable floor radius is approximately 22.9 meters (75 feet). Figure 6.1-3 provides a plot of these parameters with the shaded area indicating the collective parameters which will provide a comfortable working environment. The size of the central non-rotating hub must be such that a man entering it by one of the spokes from the rotating portions of the spacecraft will not be overcome by Coriolis acceleration effects. Angular velocity of the rotating portions, the radius of the non-rotating hub, the maximum ratio between the gravity forces and Coriolis acceleration which is temporarily acceptable, and the speed at which man might be expected to climb toward or away from the hub provide the limits for such movement. The force caused by the coriolis acceleration may be obtained from these parameters:

$$F_{cor} = 2v\sqrt{\frac{m^2 n}{g_o r}}$$ where

F_{cor} = Coriolis acceleration force,

v = relative velocity between moving body and rotating vehicle, ft/sec

m = Earth weight of body, lbs.

n = ratio of gravity at body location to Earth gravity

r = radius at which body is rotating, ft.

g_o = Earth gravity (32.2 ft/sec/sec).

The force due to artificial gravity may be obtained from:

$$F_g = mn$$

The gravity ratio n may be obtained from:

$$n = \frac{r}{g_o}\left(\frac{\pi N}{30}\right)^2$$ where N = vehicle rotational velocity, RPM.

Using the maximum ratio between Coriolis acceleration force and gravity force, these forces are equal, and the preceding equations, when combined and solved for the radius r, gives:

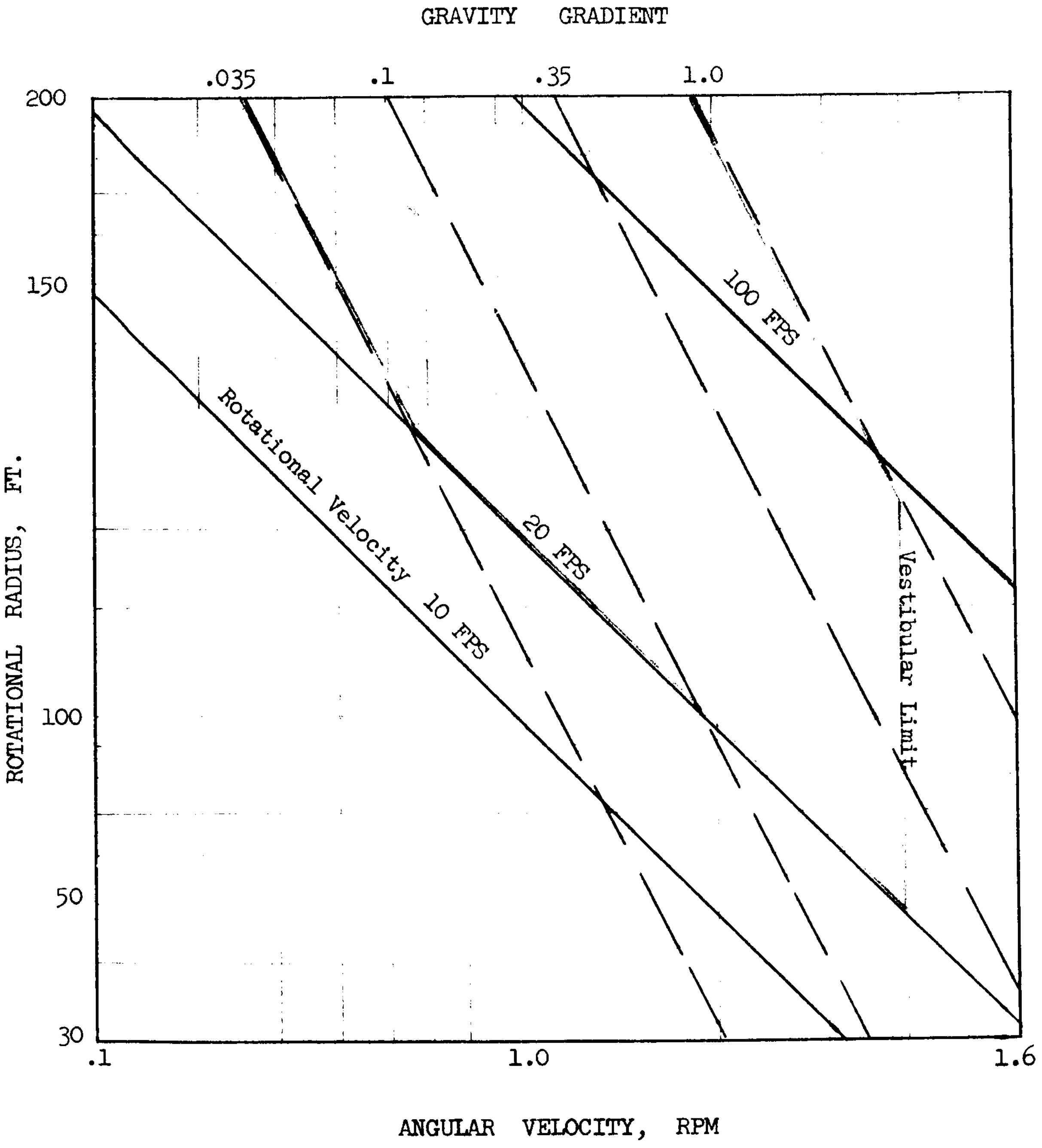

Figure 6.1-3: HUMAN FACTORS STRESS LIMIT CURVES

$$r = \frac{60V}{\pi N}$$

Using an angular velocity (N) or 4 RPM, and a climbing speed (v) of .305 meters per second (1 foot per second) maximum requires a hub with a minimum radius of 1.46 meters (4.8 feet). If the climbing rate is increased, the hub radius must also increase.

6.1.2.2 Initial OLF System Analysis. - The study covered by the OLF system requirements or problems imposed on the individual systems in the initial OLF by either providing or omitting OLF rotation to produce artificial gravity aboard the initial OLF. The purpose of performing this study was to determine the desirability, from the systems standpoint, of either providing or omitting artificial gravity.

The great majority of individual components will not in themselves operate appreciably differently in either a zero gravity or artificial gravity environment; however, the size, type, and number of components required for system operation will be materially affected. In some of the systems to be used in the initial OLF the presence of artificial gravity would simplify system operation, thereby reducing either the number, size or complexity of components required to produce the desired system operation. The converse is also true, in that the presence of OLF rotation to provide artificial gravity would require additional larger, or more complex components than would be necessary if the OLF were not rotated, such as increased structural integrity for the docking ports. In the remaining OLF systems, the system would not be affected in any way by operation in either zero gravity or artificial gravity environments.

While system operational requirements made up the greater portion of this analysis, problems resulting from performing system maintenance were also considered. In this respect, the lack of gravity during maintenance of electrical and electronic systems will result in very possible system degradation. Since it is practically impossible to do any maintenance without causing some chipping or breaking off of small particles, if all of these chips or particles are not recovered they are very likely to settle into areas where they can affect system operation by causing shorts, interfering with motion of moving parts, etc. Collection and removal of these chips and particles will be considerably more difficult and less positive in a zero gravity environment. However, proper design of the equipment can largely overcome this handicap.

Figure 6.1-4 contains the results of the study of the initial OLF systems and indicates the desirability of providing artificial gravity and the problems encountered as a result of either providing or omitting artificial gravity aboard the initial OLF.

The electrical power, checkout and monitoring, and display systems are not operationally affected by either the presence or the omission of artificial gravity; however, these systems may require special construction methods such as using sealed components, to protect components from contamination resulting from maintenance activities, if artificial gravity is not provided.

ITEM NO.	OLF SYSTEM	DESIRED LEVEL	EVALUATION
1.	Electrical Power		
a.	Power Generation Subsystem	0 to 1.0	The equipment used in this subsystem would not be affected either by the presence or lack of artificial gravity.
b.	Power Distribution Subsystem	0 to 1.0	Sealed contacts will be required if no artificial gravity is provided to protect contacts from shortening by chips dislodged during maintenance activities; however, sealed switches, relays, etc. will probably be required for other reasons due to space environment, so that, presence or lack of artificial gravity will have little or no effect on subsystem design.
2.	Guidance and Navigation	0	Rotation of the OLF to provide artificial gravity will require that equipment such as the IMU, the sextant, the telescope, horizon scanner, etc. be mounted on a stable platform. To provide this stable platform would require added equipment which would have to be developed.
3.	Attitude Control and Stabilization		
a.	Reaction Control Motors Subsystem	0 to 1.0	The number, size, or position of these motors will not be affected by either the presence or the lack of OLF rotation for artificial gravity.
b.	Propellant Tankage Subsystem	0	The volume of the propellant tanks required in this subsystem will be greater if OLF rotation is provided. Rotation of the initial OLF configuration will result in more frequent orbit corrections and will require propellant to start or stop rotation when such action is required.
c.	Electronic Subsystem	0 to 1.0	This subsystem would not be affected by either the presence or lack of OLF rotation for artificial gravity.

Figure 6.1-4: GRAVITY REQUIREMENTS FOR OLF SUBSYSTEMS

ITEM NO.	OLF SYSTEM	DESIRED LEVEL	EVALUATION
4.	Environmental Control		
a.	Atmosphere circulation, purification and temperature control subsystems.	0.1 to 1.0	In an OLF where rotation for artificial gravity could be maintained at all times, these subsystems could be considerably simplified. With artificial gravity much of the atmosphere circulation required for purification and temperature control would be provided by natural convection, thereby, reducing the number and size of fans required without artificial gravity. In the purification subsystem a large amount of the debris in the atmosphere would drop to the floor where it may be collected during normal cleaning, thereby, reducing the load on the purification subsystem, if artificial gravity is provided. Without artificial gravity the circulation subsystem would have to move the atmosphere at a high rate to force the debris into the purification subsystem.
b.	O_2 and N_2 Pressurization and Makeup Storage Subsystems	0 to 1.0	This system would not be affected by either the presence or lack of artificial gravity.
5.	Life Support		
a.	Water Management Subsystem	0.1 to 1.0	Collection of waste water and its purification would be greatly simplified by the presence of artificial gravity.
b.	Waste Management Subsystem	0.1 to 1.0	Collection of waste material, in particular food and fecal matter, would be greatly simplified by the presence of artificial gravity.
c.	Contaminant Control Subsystem	0.1 to 1.0	Size and maintenance level for many components of this subsystem may be reduced if artificial gravity were provided continuously, and the amount of maintenance required would be reduced even if artificial gravity is to be provided on a part-time basis.

Figure 6.1-4: GRAVITY REQUIREMENTS FOR OLF SUBSYSTEMS (CONTINUED)

ITEM NO.	OLF SYSTEM	DESIRED LEVEL	EVALUATION
d.	Personal Hygiene Subsystem	0.1 to 1.0	Washing, bathing, etc. could be performed in an Earth-like manner and without either special equipment or the use of the "moist soap pad" if artificial gravity is provided. If artificial gravity is provided only on a part-time basis, the "moist soap pad" method would be required during periods when the artificial gravity is not provided.
e.	Physiological Conditioning Subsystem	0.1 to 1.0	A centrifuge and/or a trampoline, plus other pieces of equipment appear necessary to provide a means of maintaining the physical well-being of the crew. If artificial gravity is provided, some of this equipment would not be required and the usage rates for the remaining pieces of equipment could be greatly reduced.
6.	<u>Checkout and Monitoring</u>		
a.	Umbilical Service Boom Subsystem	0	The physical mating of this boom with either the OLV or the Saturn Stage S-II vehicles would be more difficult if accomplished while the OLF is to provide artificial gravity, however, this mating must be accomplished immediately following docking of each of these vehicles at a time while the OLF rotation would be stopped to simplify the docking operation. OLF rotation to provide artificial gravity at any time other than during this mating would have no effect on this subsystem.
b.	Electronic Subsystem	0 to 1.0	This subsystem would not be affected by either the presence or lack of OLF rotation for artificial gravity.
7.	<u>Communications and Data Management</u>		
a.	Antenna Subsystem	0 to 1.0	Since all OLF antennae are of a non-directional omni type, this subsystem would not be affected by either the presence or lack of OLF rotation for artificial gravity.

Figure 6.1-4: GRAVITY REQUIREMENTS FOR OLF SUBSYSTEMS (CONTINUED)

ITEM NO.	OLF SYSTEM	DESIRED LEVEL	EVALUATION
7.b.	Electronic Equipment Subsystem	0 to 1.0	This subsystem would not be affected by either the presence or lack of OLF rotation for artificial gravity.
8.	Displays	0 to 1.0	This system would not be affected by either the presence or lack of OLF rotation for artificial gravity.
9.	Structure and Mechanisms		
a.	Electrical Power, Guidance and Navigation, Environmental Control, Checkout and Monitoring, Communication and Data Management and Displays.	0 to 1.0	The structure and mechanisms requirements for these systems will not be affected by either providing or omitting OLF rotation for artificial gravity.
b.	Attitude Control & Stabilization	0	The additional tankage required if OLF rotation for artificial gravity is provided will require additional structure to support the added tanks.
c.	Life Support	0.1 to 1.0	If continuous OLF rotation for artificial gravity could be provided, then some life support structural equipment could be either omitted or reduced in size and mass resulting in lower structural requirements for this system.
d.	Docking Ports and Basic OLF Structure	0	The loads imposed on the central tubular section of the OLF and the docking ports with vehicles docked as a result of OLF rotation for artificial gravity would be much greater than in a non-rotating OLF.

Figure 6.1-4: GRAVITY REQUIREMENTS FOR OLF SUBSYSTEMS (CONTINUED)

Figure 6.1-4 shows that many of the major subsystems of the guidance and navigation system and the communications and data management system require a stable platform which provides continuous fixed alignment. In rotating the initial OLF to provide artificial gravity, the requirement for such a stable platform would present problems, both in providing space and weight provisions within the initial OLF, and in providing for the development of this added equipment.

Figure 6.1-4, item 3.b., indicates that the reaction control subsystem of the attitude control and stabilization system would require an increase in the usage of propellants to maintain the required control. A cylindrical body, when rotated about an axis through the midpoint of its longitudinal axis, tends to roll more than when it is not rotated, and this increased rolling in orbit would increase the required frequency of orbit keeping corrections. The additional propellant requirement for orbit keeping and for the frequent requirement to start and stop rotation of the initial OLF, would be of such large mass and volume that to provide artificial gravity during those periods when a number of vehicles are docked, for the initial OLF does not appear to be advisable.

The environmental control and life support systems would both be greatly simplified and improved by providing artificial gravity. Rotation of the OLF to provide the desired artificial gravity would not create any significant problems and provision of such gravity would allow many subsystems within these systems to be either eliminated or simplified. With artificial gravity, the forced flow of air required to blow dust, food particles, moisture droplets, maintenance debris, etc. into filters and other absorption equipment would not need to be as great, since much of this material would drop to the floor where it could be collected and removed during normal cleaning. With less of the debris being collected by the filters and other absorption equipment, the amount of maintenance for these components would be reduced. Heating and/or cooling of living and work areas would be simplified since normal convection would provide much of the circulation. In general, the major portions of the equipment and methods of usage would be much closer to equivalent systems on Earth when the OLF is provided with artificial gravity. However, the full advantage of having artificial gravity for these systems in the initial OLF can not be realized, since there will be times when the OLF rotation must be stopped and these systems will then be required to operate at zero gravity.

The final system identified in Figure 6.1-4, structures and mechanisms, is not in fact a true system but is actually the collection of the structural and mechanical features of all other systems. The effects of either providing or omitting artificial gravity on this group are actually the effects imposed on the particular system involved, and have in general been discussed in the foregoing system discussions. However, nothing has been included concerning the basic OLF structure which would be affected by artificial gravity provisions. The structure of the OLF in the area of the docking ports would have to be much heavier for the rotating initial OLF than for a non-rotating OLF. Increased structure would also be required at the seals between the MORLs and the central bay tube if artificial gravity is used, and increased complexity of equipment within the elevator tubes also would result. In the concept of the initial OLF, the noted structural problems would affect the OLV, LOX tankers, and any other docked vehicles; since any vehicle docked to the OLF would have to rotate with it, their structure would have to carry the loads imposed by the OLF rotation.

6.1.2.3 Gravity Classifications for Initial OLF Activities and Systems - The activities and systems analyzed in Paragraphs 6.1.2.1 and 6.1.2.2 may be grouped into three general cliassifications, based on the desirability of providing artificial gravity on board the initial OLF: systems and activities not affected by gravitational level; systems and activities which would be complicated by providing artificial gravity; and systems and activities which would be simplified by providing artificial gravity. Systems and activities within each of these groups are as follows:

Group I -- Systems and activities not affected by gravitational level. -

a. Systems

   1. Electrical power,
   2. Checkout and monitoring,
   3. Displays.

b. Extravehicular activities

   1. Extension of MORLs,
   2. Propellant transfer.

c. Shirtsleeve activities

   1. Assembly of OLF subsystems

Group II -- Systems and activities which would be complicated by providing artificial gravity . -

a. Systems

   1. Guidance and navigation,
   2. Attitude control and stabilization,
   3. Communications and data management,
   4. Structures and mechanisms.

b. Extravehicular activities

   1. Separation and docking of Apollo CM,
   2. Deorbit of Apollo CM fairings and injection stage,
   3. Installation and checkout of OLF subsystems,
   4. Scheduled maintenance,
   5. Unscheduled maintenance,
   6. OSE operation,
   7. Docking operations,
   8. Boom extension,
   9. OLV and fuel tanker checkout,
   10. OLV separation

c. Shirtsleeve activities (none)

Group III -- Systems and activities which would be simplified by providing artificial gravity.

a. Systems

1. Environmental control,
2. Life support.

b. Extravehicular activities (None)

c. Shirtsleeve activities

1. Checkout of OLF subsystems,
2. Routine operations,
3. Housekeeping,
4. Nutrition,
5. Leisure,
6. Personal hygiene,
7. Scheduled maintenance,
8. Unscheduled maintenance.

6.1.2.4 Gravitational Requirements for Scientific R&D Experiments - The scientific R&D experiments which may be conducted on the initial OLF are discussed in some considerable detail in Paragraph 6.2 of this study; however, the desirability of providing or excluding OLF rotation for artificial gravity during the performance of these experiments has not been considered. The experiments which are required or are desirable for performance on the initial OLF may, be considering the level of artificial gravity on the OLF during the experimental activities, be grouped as follows:

a. Experiments requiring zero gravity,

b. Experiments requiring artificial gravity,

c. Experiments not affected by presence or exclusion of artificial gravity.

Figure 6.1-5 lists all the scientific R&D experiments that were found to be both desirable and feasible by the study covered in Paragraph 6.2 of this study. Experiments shown in Figure 6.1-5 are identified by the same experiment number and title as used in Figure 6.2-1. In addition to the identification of the experiments, Figure 6.1-5 also shows the level of artificial gravity required for each experiment and an evaluation of the effect that artificial gravity would have on the experiment.

Figure 6.1-5 shows that experiments 1 through 6, 8 through 16, 18, 29, 36, 39, 40, 45, 76 through 83, 96, and 97 are those which require that no OLF rotation for artificial gravity by used while the experiments are in progress. Since the initial OLF will only be able to provide artificial gravity during a limited portion of its life, it must be designed to operate at zero gravity for considerable periods, thereby permitting this group of experiments to be conducted when rotation is not provided.

Experiments 34, 37 and 38 are those which may be performed more easily in the absence of artificial gravity. OLF rotation for artificial gravity during the performance of these experiments will not affect the data output nor actual experimental procedures, but will add greatly to the complexity of experimental equipment. These experiments all require the use of a probe which must remain oriented in the direction of the OLF velocity vector along its orbit; with OLF rotation, the pointing of this sting becomes extremely complex. The planned time for the longest of these experiments is less than 50 days and to omit OLF rotation for this amount of time does not present any operational problems.

Twenty-one experiments may be accomplished with equal ease and data reliability in either a non-rotating zero gravity or a rotating artificial gravity environment. These are numbers 7, 19 through 28, 33, 35, 46, 47, 49, 50, 52, 53, 55, and 56. Experiment number 7 must be conducted continuously throughout the life of the OLF, so must be performed under both operating conditions if the artificial gravity environment proves desirable and is incorporated in the OLF.

Experiments 84 through 91 are the only eight experiments that require OLF rotation during their performance. These experiments are actually possible only if rotation for artificial gravity is found to be desirable or required during any portions of the life of the initial OLF or advanced OLFs.

One experiment, number 17, would be simplified by conducting it while the OLF is being rotated for artificial gravity. However, this simplification is possible only if the entire experiment can be conducted without any period during which rotation must be interrupted. This experiment uses tanks of water which must be continually aerated during the experimental period, and the atmosphere used for the aeration must be supplied and removed from the tanks without removing any of the water. Under conditions of zero gravity, the supply and removal of the aeration atmosphere becomes extremely complex.

The remaining four experiments, numbers 92 through 95 can not at this time be identified with any required level of gravity. Two factors will need definition before the gravity level requirements can be determined. The first common factor is whether or not OLF rotation for artificial gravity will be provided at all; if the OLF is to be rotated for artificial gravity at any time during its life then the second factor will determine the level of gravity required for these experiments. The second factor for experiments 92, 93, and 95 will depend on the results of experiments 86, 87, 90, and 91; while the second factor for experiment 94 will depend on the results of experiments 84, 85, 88, and 89. If during the performance of either experiments 86, 87, 90, and 91 or experiments 84, 85, 88, and 89, the activities being conducted under these experiments prove to be desirable for performance during OLF rotation for artificial gravity, then the related experiment(s) of this group must also be performed under conditions of artificial gravity. Should either the first or second factor show artificial gravity to be undesirable, then these experiments must be performed under conditions of zero gravity.

6.1.3 Recommendations. - In analyzing the gravity requirements for the OLF, it is evident from the human comfort point of view and operations and maintenance

EXP. NO.	EXPERIMENT TITLE	DESIRED GRAVITY LEVEL	EVALUATION
1	Effects of Zero-g at the Subcellular Level	Zero	Cannot be performed under conditions of artificial gravity.
2	Effects of Zero-g and Radiation on Bacteria	Zero	Same
3	Effects of Zero-g on Paramecium and Hela Cells	Zero	Same
4	Effects of Zero-g on Newly Fertilized Eggs	Zero	Same
5	Effects of Radiation and Zero-g on Differentiation in Flour Beetle	Zero	Same
6	Effects of High Vacuum & Radiation on Bacteria	Zero	Same
7	Biological Monitoring of Life Support Systems	0 to 0.4	Experimental procedure may vary slightly, but results will not be affected by presence or lack of gravity.
8	Functional & Morphological Responses in Rodents	Zero	Cannot be performed under conditions of artificial gravity.
9	Effect of Zero-g on Immune Defenses	Zero	Same
10	Effect of Zero-g on Dividing Human Cells	Zero	Same
11	Germination, etc. Plant Studies During Zero-g	Zero	Cannot be performed under conditions of artificial gravity.
12	Animal Adjustment to Various Forces	Zero	Same
13	Effect of Zero-g on DNA	Zero	Same

Figure 6.1-5: GRAVITY REQUIREMENTS FOR R&D EXPERIMENTS (CONTINUED)

EXP. NO.	EXPERIMENT TITLE	DESIRED GRAVITY LEVEL	EVALUATION
14	Function of Gravity - Sensitive Organs in Zero-g	Zero	Cannot be performed under conditions of artificial gravity.
15	Effect of Space Environment on Daphnia Pulex	Zero	Same
16	Discrimination & Communication of Animals under Zero-g	Zero	Same
17	Study of Photosynthetic Action Spectra of Algae Cultures	0 to 0.4	Artificial gravity may simplify the experimental equipment, and results would not be affected by either the presence or lack of artificial gravity.
18	Changes in Sex Distribution of Offspring Conceived, etc. in the Weightless State	Zero	Cannot be performed under conditions of artificial gravity.
19	Collecting Micro-organisms	0 to 0.4	Artificial gravity would have no effect on either the experimental procedure or results.
20	Study of the Operation of a Large Aperature Telescope - Part I	Zero	Telescope must be mounted in either a near orbiting or tethered experimental module so presence or lack of artificial gravity on the OLF has no influence on this experiment.
21	Study of the Operation of a Large Aperature Telescope - Part II	Zero	Same
22	Space Radiation Telescope	Zero	Same
23	Solar Telescope, Part I	Zero	Same
24	Solar Telescope, Part II	Zero	Same
25	Artificial Meteors	Zero	Artificial gravity would have no effect on either the experimental procedure or results.

Figure 6.1-5: GRAVITY REQUIREMENTS FOR R&D EXPERIMENTS (CONTINUED)

EXP. NO.	EXPERIMENT TITLE	DESIRED GRAVITY LEVEL	EVALUATION
26	Observation of Ionized Clouds in Space	0 to 0.4	Telescope must be mounted in either a near orbiting or tethered experimental module so presence or lack of artificial gravity on the OLF has no influence on this experiment.
27	High Energy Particle Physics	0 to 0.4	Artificial gravity would have no effect on either the experimental procedure or results.
28	Vacuum Ultraviolet & Soft X-ray Spectroscope	0 to 0.4	Telescope must be mounted in either a near orbiting or tethered experimental module so presence or lack of artificial gravity on the OLF has no influence on this experiment.
29	Planetary & Satellite Surface Properties	Zero	Cannot be performed under conditions of artificial gravity.
33	Electro-optical Experiment	0 to 0.4	Telescope must be mounted in either a near orbiting or tethered experimental module so presence or lack of artificial gravity on the OLF has no influence on this experiment.
34	Drag Studies	Zero	OLF rotation for artificial gravity would cause increased complexity in experimental equipment.
35	Zero Pressure Chemical Reactions	0 to 0.4	Artificial gravity would have no effect on either the experimental procedure or results.
36	Density Profiles of Liquid in the Critical Region	Zero	Cannot be performed under conditions of artificial gravity.
37	Absorption of Gases on Solid Surfaces	Zero	OLF rotation for artificial gravity would cause increased complexity in experimental equipment.
38	Methods of Obtaining Localized Ultra-high Vacuum	Zero	Same

Figure 6.1-5: GRAVITY REQUIREMENTS FOR R&D EXPERIMENTS (CONTINUED)

EXP. NO.	EXPERIMENT TITLE	DESIRED GRAVITY LEVEL	EVALUATION
39	Non-gravitational Forces	Zero	Cannot be performed under Conditions of Artificial gravity.
40	Total Blood Volume	Zero	Same
45	Geoscience Materials Laboratory	Zero	Same
46	Passive Mass Sensor-visual Area Determination	0 to 0.4	Telescope must be mounted in either a near orbiting or tethered experimental module so presence or lack of artificial gravity on the OLF has no influence on this experiment.
47	Space Bug Control	0 to 0.4	Artificial gravity would have no effect on either the experimental procedure or results.
49	Assessment of Electronic Vulnerability, Communications System	0 to 0.4	Same
50	Investigation/Demonstration - Masking Techniques	0 to 0.4	Same
52	Launch Detection and Early Warning	0 to 0.4	Same
53	Sea State - Visible IR Microwave	0 to 0.4	Same
55	Passive Direction Finding - IBM	0 to 0.4	Same
56	Spaceborne Target Discrimination System	0 to 0.4	Same
76	Docking of Complete OSAV to OLF - Non-rotating OLF	Zero	Cannot be performed under conditions of artificial gravity.
77	Separation of complete OSAV from OLF - Non-rotating OLF	Zero	Same

Figure 6.1-5: GRAVITY REQUIREMENTS FOR R&D EXPERIMENTS (CONTINUED)

EXP. NO.	EXPERIMENT TITLE	DESIRED GRAVITY LEVEL	EVALUATION
78	Docking of OSAV/CM to OLF - Non-rotating OLF	Zero	Cannot be performed under conditions of artificial gravity.
79	Separation of OSAV/CM from OLF - Non-rotating OLF	Zero	Same
80	OSAV/PM and OSAV/CM Ingress from Docking Ports to OLF Hangar -- Non-rotating OLF	Zero	Same
81	OSAV/CM and OSAV/PM Egress from OLF Hangar to Docking Ports - Non-rotating OLF	Zero	Same
82	OSAV/CM Ingress to OLF Hangar from Docking Port - Non-rotating OLF	Zero	Same
83	OSAV/CM Egress from OLF Hangar to Docking Port - Non-rotating OLF	Zero	Same
84	Docking of Complete OSAV to OLF - Rotating OLF	Varying Gravity (4 RPM)	OLF rotation at 4 RPM required for this experiment. Experiment is not required if artificial gravity is not deemed desirable on OLF.
85	Separation of Complete OSAV from OLF - Rotating OLF	Varying Gravity (4 RPM)	Same
86	Docking of OSAV/CM to OLF - Rotating OLF	Varying Gravity (4 RPM)	Same
87	Separation of OSAV/CM from OLV - Rotating OLF	Varying Gravity (4 RPM)	Same

Figure 6.1-5: GRAVITY REQUIREMENTS FOR R&D EXPERIMENTS (CONTINUED)

EXP. NO.	EXPERIMENT TITLE	DESIRED GRAVITY LEVEL	EVALUATION
88	OSAV/PM and OSAV/CM Ingress from Docking Ports to OLF Hangar -- Rotating OLF	Varying Gravity (4RPM)	OLF rotation at 4 RPM required for this experiment. Experiment is not required if artificial gravity is not deemed desirable on OLF.
89	OSAV/CM and OSAV/PM Egress from OLF Hangar to Docking Ports - Rotating OLF	Varying Gravity (4 RPM)	Same
90	OSAV/CM Ingress to OLF Hangar from Docking Port - Rotating OLF	Varying Gravity (4 RPM)	Same
91	OSAV/CM Egress from OLF Hangar to Docking Port - Rotating OLF	Varying Gravity (4 RPM)	Same
92	Cargo Transfer - Small Containers Using OSAV/CM	(see evaluation)	If artificial gravity is provided on the OLF, and if experiments 86, 87, 90 and 91 prove OLF rotation is acceptable during the activities investigated during the noted experiments, then OLF rotation at 4 RPM should be continued during this experiment. However, if artificial gravity is proved undesirable for either of the foregoing reasons, then it should not be provided during this experiment.
93	Cargo Transfer - Large Containers Using OSAV/CM for Command	(see evaluation)	Same
94	Cargo Transfer - Personnel and Equipment Using Complete OSAV	(see evaluation)	If artificial gravity is provided on the OLF, & if Experiments 84, 85, 88 & 89 prove OLF rotation is acceptable during the activities investigated during the noted experiments, then OLF rotation at 4 RPM should be continued during this experiment. However if artificial gravity is proved undesirable for the foregoing reasons, then it should not be provided during this experiment.

Figure 6.1-5: GRAVITY REQUIREMENTS FOR R&D EXPERIMENTS (CONTINUED)

EXP. NO.	EXPERIMENT TITLE	DESIRED GRAVITY LEVEL	EVALUATION
95	Satellite Retrieval and Reorbit Using OSAV/CM	(see evaluation)	If artificial gravity is provided on the OLF, and if experiments 86, 87, 90 & 91 prove OLF rotation is acceptable during the activities investigated during the noted experiments, then OLF rotation at 4 RPM should be continued during this experiment. However, if artificial gravity is proved undesirable for either of the foregoing reasons, then it should not be provided during this experiment.
96	Alignment and Assembly of OLV using OSAV/CM as a Space Tug	Zero	Rotation of AOLV is not planned, therefore, providing rotation for artificial gravity during this experiment would only add to experiment gravity.
97	OLV Maintenance and Repair Operations Using the OSAV/CM	Zero	Same

Figure 6.1-5: GRAVITY REQUIREMENTS FOR R&D EXPERIMENTS (CONTINUED)

considerations that a certain level of gravity is desirable. However, the means of producing artificial gravity, rotating the OLF, has undesirable side effects due to the Coriolis acceleration forces produced by rotation. It is possible within the MORLs themselves to maintain an acceptable level of comfort, but from information now available, it appears that as man moves towards the axis of rotation he would suffer the effects of uncomfortable high Coriolis acceleration forces. If the OLF were rotated at a slower rate the artificial gravity gradient would decrease, but a rotational velocity of less than 20 FPS would be reached, which is the lower limit for human comfort; this in turn, would detract from the comfort obtained by artificial gravity in the MORLs.

During orbital launch operations, artificial gravity will have to be limited to those periods when the mass balance resulting from docked vehicles places the center of mass close to the rotational axis and does not require excessive propellants. This is approximately 30% of the time. Inasmuch as the OLF will not be rotated during most of OLO, man will have to use other means for conditioning himself in space, and it is therefore recommended that incorporation of artificial gravity into the OLF be held in abeyance until future experiments provide more definitive information regarding the desirability for gravity. Unless biomedical experiments show a need, artificial gravity is not recommended.

6.1.4 Zero Gravity Initial OLF Configuration. - The recommendations resulting from the activities and systems analysis portions of the gravitation level analysis indicate that provisioning of equipment to produce rotation of the OLF for artificial gravity may not be required or even desirable. The final decision as to whether or not artificial gravity is to be used on the OLF must be based on experimental research into man's ability to live and work for extended time periods under conditions of zero gravity. Since the activities and systems analysis indicates greater problems to be resolved if artificial gravity is provided then the problems to be resolved without artificial gravity, some consideration of a zero gravity OLF concept is necessary. In such a zero gravity OLF, the distance between floors within the vehicle no longer has to be sized for rotational radius, thereby permitting the OLF to be reduced in size. The size of the zero gravity OLF must only provide the space required to perform OLO and support functions, equipment, and supplies.

6.1.4.1 Concept Parameters. - The zero gravity OLF concept would generally follow the concept for the baseline OLF, in that both concepts are developed from two modified MORL vehicles which are connected together by a central cylinder that provides facilities for docking the OLV, the LOX tankers, Apollo Logistics Supply Vehicles, and the Saturn S-II stage. The primary differences between the two concepts exists in the manner in which the central cylinder connects to the MORLs and the use of the space within the central cylinder. In the zero gravity OLF concept, the central tube has the same diameter as the MORL skirt and is attached by a permanently sealed (welded) joint, whereas, in the baseline concept the central cylinder is slightly larger than the MORL skirt, so that the MORL can slide inside the cylinder and the final attachment is not made until after the MORLs are deployed in orbit. The length of the central cylinder for the zero gravity concept is sized to provide only the required docking ports, air locks, hatches, and surface area for OLF systems radiators; while in the baseline concept the length of the central cylinder is sized to place the floors of the living quarters in the two MORLs at a distance of 42.67 meters (140 feet) between them. In the zero gravity OLF concept, the docking hub will include the entire central cylinder volume, plus the volume enclosed between the end dome and the skirt of both MORLs, while in the baseline OLF concept, the docking hub uses only a 8.84 meter (29') long section at the middle of the central cylinder. The resulting size of the zero gravity OLF, as shown in Figure 6.1-6 provides therefore a vehicle of approximately 33.53 meters (110') which is the same as the compressed launch length for the baseline OLF concept.

In the zero gravity OLF concept the principal design parameters include:

a. The existing MORL end dome air locks are retained to provide access to the OLF hub.

b. A 1.52 meter (5') diameter tube passing through the hub connects the two MORL air locks to provide a pressurized passage between the MORLs.

c. The MORL air lock connecting tube provides a sealable hatch sized to permit a spacesuited man and some pieces of equipment to transfer between the tube and hub.

d. Hub and air lock connecting tube is normally pressurized to 48,261 new-

FIGURE 6.1-6 ZERO GRAVITY OLF

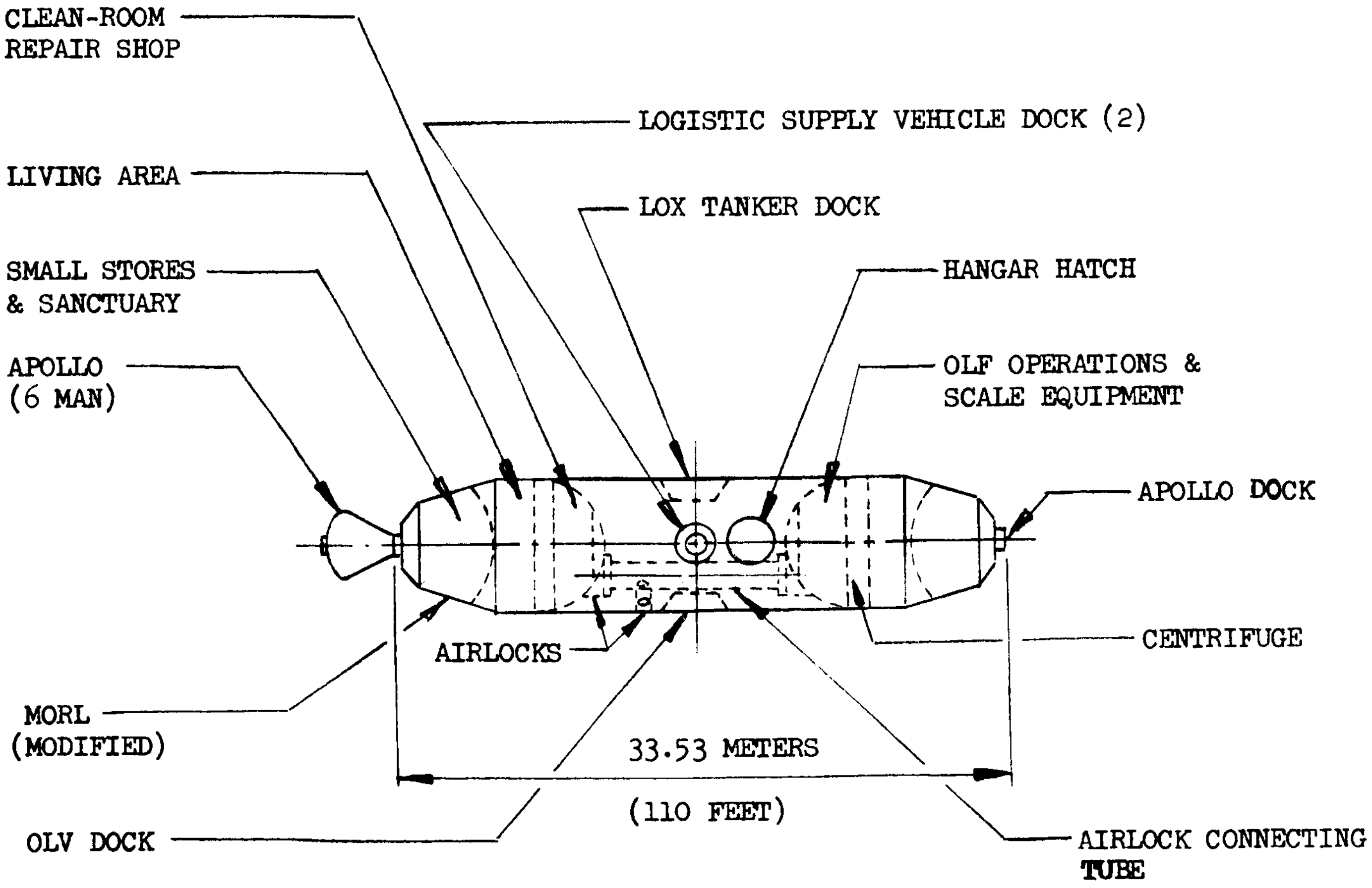

ton/meter^2 (7 psi MORL pressure).

e. Hub may be depressurized by pumping down, while air lock connecting tube is either maintained at 48,261 newton/meter^2 (7 psi) or depressurized with hub by leaving tube to hub hatch open.

f. Hub is provided with two air locks; one to docked OLV, and one to space.

g. Hub docking ports include one dock for OLV, one dock for LOX tankers, and two docks for logistic supply vehicles. These docks are of the same configuration and are oriented in the same positions to each other as are the equivalent docks of the baseline OLF concept.

h. The hub of the zero gravity OLF has a 2.44 meter (8') diameter hatch for egress from and ingress into the hub OSE hangar space.

i. The hub provides a hangar space for storing and repair of the OSE, the volume of this space is much more confined in the zero gravity OLF than in the baseline OLF concept.

6.1.4.2 Baseline-zero Gravity OLF Comparisons. - The features provided by the baseline OLF concept, result in certain advantages in selecting one concept or the other. Features providing the most important differences between the two concepts are discussed in the following paragraphs of this section.

The baseline concept provides a long central cylinder which, after deployment of the MORLs, is used for the docking hub, and two large volumes (approximately 7.01 meters in diameter by 11.28 meters in length) that will be used as the hangar for the OSE and the experiment bay. The zero gravity concept provides a much shorter central cylinder, which contains only the volume required for the docking hub and limited hangar space for the OSE. Loss of the space for the experiment bay within the zero gravity OLF concept does not restrict the use of the OLF for performing research experiments. Use of the experiment bay in the baseline OLF will require that the equipment for the individual experiment be launched to the orbiting OLF and installed in the experiment bay, requiring some amount of modification to adapt the bay to each experiment. The zero gravity OLF does not have this large laboratory space, thereby requiring that the experiment delivery vehicle be used as the laboratory space. With each experiment or group of experiments using their delivery vehicle for experimental work area, this delivery vehicle can be built to satisfy the requirements for those experiments planned for each vehicle, and all equipment would be installed prior to launch, thus greatly reducing preparation work in space. Under such a plan, the laboratory would be docked to the OLF and the OLF would supply living quarters, data transmission facilities, etc.

In the baseline OLF the hangar is large enough to provide storage and repair work space for the OSE, plus space to do repair work to the Apollo Command Modules as needed. The hangar in the zero gravity OLF is only large enough to store the OSE and perform maintenance on it; any repairs required at the OLF on the Apollo vehicles would have to be performed outside the OLF.

The deployable configuration of the baseline OLF requires that the central cylinder be slightly larger in diameter to permit the MORLs to be retracted into it for launch, and further requires complicated cylinder ends to stop the MORLs when they are deployed and to provide seals and locking mechanisms between the cylinders and the MORLs. The zero gravity OLF cylinder is much simpler in that the joint between it and the MORLs is fixed and permanent. The single inner tube of the zero gravity OLF serves the same function as the two telescoping elevator tubes of the baseline OLF, and does so with greatly reduced complexity.

In the baseline OLF the MORL modules are modified by reversing the locations of the working and living areas. This change for the standard MORL vehicle was done for two purposes; first, placing the living area farther from the rotational axis than the work area was considered more desirable, since the advantages of a higher gravity level for living area activities are greater than for work activities; and second, with the living areas farther from the vehicle center than the work areas, personnel traffic from one work area to the other would not have to pass through the living areas. In the zero gravity OLF, this modification to the MORL modules does not provide the first advantage, however, the second reason still holds. With this loss of value, the cost of modifying the MORLs may no longer be justified.

6.1.4.3 RDT&E Plan - Zero Gravity Initial OLF Configuration. - Research development test and engineering for an initial zero gravity spacecraft to meet the requirements identified in Paragraph 6.1.4.1 will be basically similar to the initial baseline OLF RDT&E plan, Section 7.1. The schedule requirement will be the same, i. e. constrained by a 1975 Venus Fly-By opportunity, orbital acceptance testing, system testing, MORL availability, and ORL experiments, reference Paragraph 7.1.1, Figure 7.1-1. The OLF baseline RDT&E plan is modified by a reduction in cost and size of the center cylinder, elimination or modification of structural segments, and artificial gravity oriented ORL experiments as defined in Paragraph 6.3.

In the zero gravity OLF concept, the principal RDT&E differences from the baseline initial OLF include:

a. Less structural central cylinder area will be required and only one tube, elevator, and associated attaching mechanism will be required.

b. A welded joint replacing the telescoping field joint. This joint eliminates the telescoping cabling mechanisms, seals, and latches and provides a simpler design and manufacturing joint.

c. The pressure bulkheads within the central cylinder are removed, thereby eliminating the need for S-IC bulkhead tooling. The docking ports are connected to the structure and reinforcing rings to absorb the docking loads.

d. Within the MORLs the locations of the working and living areas are not reversed as in the baseline OLF. MORL modification will still be required for checkout equipment installation and electrical power system removal to the central cylinder.

e. The orbiting research laboratory experiments for the baseline OLF development specifically related to artificial gravity will be eliminated.

f. Testing of telescoping effects, including orbital dynamic, and mechanical process and techniques, will be eliminated.

g. With the change of the central cylinder to the same diameter as MORL, the new baseline OLF shell assembly tooling potentially could be eliminated by the use of the existing MORL or S-IVB tooling. The change of diameter further effects both interstages between OLF and the Apollo and the injection stage. The Apollo LEM adaptor interstage could potentially be utilized for the OLF Apollo interstage.

Costs for the zero gravity initial OLF configuration have been calculated on a weights statement variance analysis from the baseline initial OLF, and by the factoring of applicable design and development costs. The costs are based on the same ground rules and criteria as Paragraph 7.1.10 and are tabulated below:

OLF "0" GRAVITY COST SUMMARY
(DOLLARS IN MILLIONS)

	DESIGN & DEV.	GROUND TEST SPACECRAFT	FLIGHT TEST SPACECRAFT	TOTAL PROGRAM COST
Structure	93.5	42.8	30.2	166.5
Communications and Data Management	8.3	15.2	15.9	39.4
Guidance and Navigation	5.0	6.8	6.2	18.0
Stability and Control	10.8	13.4	12.2	36.4
Life Support	5.0	32.2	29.8	67.0
Environmental Control	6.0	20.5	19.2	45.7
Electrical Power	38.4	23.9	*103.4	165.7
Spares	-0-	14.8	15.6	30.4
OLO Technology	16.5			16.5
System Engineering	15.0			15.0
Tooling and STE	17.5			17.5
Ground Test Operations	20.0			20.0
Flight Test Operations	7.1			7.1
System Integration	16.0			16.0
Training Personnel	10.0			10.0
Training Equipment	10.0			10.0
OLO Support Program	15.5			15.5
System Management	84.0			84.0
Test Facilities	3.5			3.5
Prelaunch	1.0			1.0
Apollo	-0-		17.2	17.2
Total @ 1965 $	383.1	169.6	249.7	802.4
Total Escalated (Use baseline ratio)	504.0	223.9	329.6	1057.5

* Include (2) nuclear heat sources @ 40 M each.

6.2 R&D Scientific Experiments

Initial OLF operations commence with the launch of the OLF and terminate five years later. For the purpose of establishing the experiments that can be performed, this period may be divided into two distinct phases. The first phase is that period during which an Orbital Launch Operation (OLO) is being conducted, and the second phase is when no OLO is in process. Each OLO period lasts approximately six months and experiments conducted during this time must be on a non-interference basis. At this time, the number of OLO periods, except for the initial OLO, is unknown. Subsequent to the initial OLO, the OLF is dedicated to scientific experimentation and will be fully used for this purpose. A large number of scientific experiments must be completed prior to making the OLF and/or the Orbital Launch Vehicle (OLV) feasible, and such experiments will not be covered in this paragraph as they are covered in extended detail in Paragraph 6.3. The remaining experiments will be categorized as to whether they can or cannot be performed during OLO.

As the range of experiments is so great, from biomedical to those more closely associated with the physical-mechanical sciences, it was not feasible to investigate all possible experiments within the time limits of this study. For this reason, first priority has been placed on the investigation of those experiments, which will provide data of value to the advanced OLF concept. No attempt is made to schedule the experiments, that is to try and define only those that can be performed during the time span available. It is obvious that it is impossible to perform all the experiments listed, and the selecting of experiments has been left as a subject for future study.

The facilities available to perform scientific experiments differ for the Baseline OLF and the Zero Gravity OLF (see Paragraph 6.1.4). The first version is launched with the MORL modules in a stowed position; these are deployed once the OLF is in orbit, thus providing an experiment and a hangar bay, each containing some 471.5 cubic meters (16,650 cu.ft.) in a cylinder of approximately 7.14 meters (23.5 ft.) diameter by 11.05 meters (36.5 ft.) long. As both these bays are occupied by the MORLs at launch, it will not be possible to install experiment equipment in the experiment bay until after the MORL deployment in orbit. This will require either that the experiment equipment be stowed for launch and installed in the experiment bay after MORL deployment, or that a separately-launched vehicle (i. e., a logistic vehicle) containing the experiment equipment be rendezvoused later.

The Zero Gravity OLF does not possess either an experiment bay or a large hangar bay, as it is a much smaller version of the Baseline OLF and is not equipped to be rotated to provide artificial gravity. While the smaller size of the Zero Gravity OLF would appear to be a shortcoming in conducting scientific experimentation, a closer investigation shows that it may actually be an asset. The Zero Gravity OLF would be designed independently of experiment requirements. At the same time, an experimental module specifically tailored to given experiment or group experiments, having its own power plant, environmental control system, and/or attitude control and stabilization system as necessary, would be developed, separately launched, and either attached to one of the OLF docking ports or simply tethered to the OLF. The OLF would provide the experiment modules with living quarters for the experimenters and communications. The advantages in using an experiment module are that it would permit a full scale R&D experiment program to be initiated concurrently with the launch of the OLF and it would not be hindered by interference with OLO. The use of a tethered experiment module would also permit conducting experiments requiring finer degrees of attitude control and stabilization than that provided by the OLF.

6.2.1 Approach. - In establishing those experiments that are feasible to perform on board the OLF, documents containing lists of experiments and experiment outlines for programs including Apollo, MORL, AES, other NASA programs, etc. have been examined. In addition, the development of the OLF concept has triggered other ideas for experiments that have been included in this study.

The first step beyond that of compiling a list of all the separately individual experiments has been to analyze the objectives of each experiment and to categorize these experiments into one of three groups; first, those experiments whose final results must be known to define the OLF, the OLV, and/or OLO; second, those experiments which in part provide data required under the first group, but which must be continued on board the OLF, OLV, or other manned space vehicles in order to provide safe operation of such vehicles; and finally, those experiments which provide no direct data required for the development of the initial OLF, the OLV or the OLO. Experiments in the first group are covered in Paragraph 6.3 and are therefore omitted from this section. The remaining experiments have been further examined to determine what their requirements are, and from these determine the feasibility of performing these experiments on board the OLF. The experiments in the second group must by definition be started by programs preceding the OLF and must be continued on the OLF in order to maintain crew safety. The experiments in the third group are those that are reqired to define the Advanced Orbital Launch Facilities or are directed toward fields of study other than development of space travel. Many of these experiments may be started during programs which precede the OLF, but due to the nature of the subjects being studied, no single program or even several successive programs will be able to obtain all the desired data which these experiments are able to provide if continued on the OLF and future programs. Among experiments which are desirable to continue are those pertaining to the fields of astronomy, meteorology, and oceanography.

Experiments conducted under the initial OLF definition studies have provided rather complete information on personnel transfer and cargo handling procedures for intravehicular and extravehicular activities in both the rotating and non-rotating modes of OLF operations. These have included studies in the use of the Astronaut Maneuvering Unit (AMU) and the Remote Maneuvering Unit (RMU) for those activities which require or are simplified by the use of these units. However, since in the initial OLF none of these activities require the use of any item of equipment such as the Orbital Support Assembly Vehicle (OSAV), no experiments have been conducted during the initial OLF definition studies, to generate or verify the procedures or vehicle concept for those operations requiring the use of the OSAV. The OSAV is required for a number of activities in Advanced Orbital Launch Operations (AOLO); therefore, experiments planned to generate and verify the OSAV concept and operating procedures have been investigated as possible subjects for initial OLF experimentation. Feasibility of performing these experiments on the initial OLF depends to a large degree on the space available within the OLF and the design concept of the OSAV. The hangar bay provided in the initial OLF, as well as that proposed for the Advanced Orbital Launch Facility, has adequate volume and access so that the OSAV may be stored and maintained inside the OLF. These OSAV experiments, plus those experiments started by programs preceding the OLF and requiring further study, and those experiments proposed for, but which may not be accomplished by programs preceding the OLF, provide the total group of experiments which should be reviewed for accomplishment on board the initial OLF. The approach taken in evaluating the possible experiments is to enumerate in tabular form all information pertaining to the experiment, such as facility and personnel requirements, equipment, environmental considerations, and logistics requirements.

The limited life of the initial OLF, combined with the limitations on the amount of experimentation possible during required OLOs, will constrain the amount of experimentation which will be possible on board the initial OLF. These limitations make it mandatory that some degree of priority be established to insure that experiments oriented to provide data most urgently required are accomplished first. The following list of general categories of experimental areas are listed in order of recommended priority:

a. Advanced Orbital Launch Operations

b. Long range space navigation

c. Long range space comminications and tracking

d. Improved structures and materials

e. Improved space repair techniques

f. Satellite retrieval, repair and reorbiting

g. Space medicine

6.2.2 Experiment Selection. - The selection of experiments to be performed on the OLF must be based on two general areas of consideration, the factors limiting experimentation due to OLF design, and the level of importance for performing the experiment.

6.2.2.1 OLF Design Limitations. - The design of the initial OLF creates certain limitations on the number and types of experiments which may be performed on the OLF. The following list of OLF limitations and their parameters are those which will affect the selection of experiments:

a. Limitations due to OLF Orientation

The present concept for the initial OLF does not provide for maintaining any fixed orientation in orbit, since the only time that a fixed orientation is required is during orbit keeping maneuvers and docking operations. Random tumbling of the OLF at other times will not have any effect on the OLO. With the orbit keeping maneuvers scheduled at approximately 30-day intervals and matched to coincide with scheduled docking operations, the time that the OLF will be maintained in a fixed orientation will be at a minimum. For experiments requiring fixed orientation, attitude control of ± 0.5 degree with ± 0.01 degree/second rate is provided by the OLF, however, to obtain this stabilization other than during docking operations will require addition propellant tankage and added loading of logistic resupply.

b. Limitations due to OLF Orbit

The initial OLF will be orbited in a 535 km (289 n.mi.) circular orbit with an inclination of from 28 to 33 degrees. Since this orbit, is established immediately following OLF launch, and the OLF does not have the capability of changing its orbit except for minor orbit correction maneuvers, no experiments requiring other orbits may be performed on the OLF.

c. Limitations due to OLF Life

The length of time required for some experiments may be of such duration that either the experiment may not be possible at all or only certain parts or phases may be accomplished. The planned life of the initial OLF is five years from launch to facility desertion. This five-year period may not be totally usable for experimentation if the experiment would interfere with OLO; then, when these operations are in progress, the experiment would have to be discontinued. At the present time, neither the number nor the schedule or orbit launches is known, so that other than providing the time required for OLO of 170 days, no other estimate of time available for experimentation is possible.

d. Limitations due to OLF Pressurization

The design of the initial OLF provides that the MORL modules, the two elevator tubes, and the elevator terminal bay are all normally pressurized to 48,261 newtons/meter^2 (7 psi) with a 50-50 mixture of oxygen and nitrogen, and the hangar and experiment bays are normally pressurized to 24,130 newtons/meter^2 (3.5 psi). As the MORL hangar/test area environmental control system is not planned to be modified in using this space for the OLF sanctuary and small stores area, the pump-down capability of this area is retained. The OLF hangar and experiment bays may be either pumped-down or pressurized to 48,261 newton/meter^2 (7 psi) when desired; this is accomplished by pumping the atmosphere from one of these bays to the other. The presently planned OLF environment control system does not have the capability of providing full pressurization to one of these bays unless the other is evacuated without use of emergency reserves. This planned pressurization level provides a large volume capable of pressures from 0 to 48,261 newtons/meter^2 (7 psi) as may be required for a large number of experiments.

e. Limitations due to OLF Power Capabilities

The electrical power system being provided for the initial OLF is supplied by two Isotope/Brayton cycle alternators, each rated at 5.5 KWe (7.0 KWe continuous overload). These alternators provide power at 120/208V, 3Ø, 1067 CPS AC, of which 27% is rectified to 28.0 ± to 0.5 V DC, 27% is rectified to 24-31 V DC for the DC subsystems, and the remaining 46% is rectified to 280 V DC then converted to 115/200V, 3Ø, 400 CPS AC for the AC subsystem. The DC subsystems rectifiers operate at 89.4% efficiency, providing 2.65 KWe (3.38 KWe continuous overload) at each of the two DC subsystem busses. The rectifiers and convertors of the AC subsystem operate at a combined efficiency of 80.7%, providing 4.08 KWe (5.20 KWe continuous overload) at the AC subsystem busses. A review of the power requirements of the initial OLF during its different modes of operations indicates that this proposed system will at rated load supply only normal OLF requirements, and during some operational modes be marginal in supplying OLF requirements. As a result, this system will not be able to supply any power for experimentation.

f. Limitations due to OLF Experimental Volume

The initial OLF provides considerable volume which may be used for experimentation. The experiment and hangar bays each contain some 471.5 cubic meters (16,650 cu. ft.) of net volume in a cylinder of approximately 7.14 meters (23.5 ft.) diameter by 11.05 meters (36.5 ft.) long in which the only sizeable obstruction is the elevator tube which extends the length of the cylinder and is 1.52 meters (5 ft.) in. diameter. The sanctuary bays in the MORL modules each supply an additional 59.2 cubic meters (2,102 cu. ft.), which may be used for small experiments,providing such experiments do not interfere with the use of these bays for emergency crew shelters.

g. Limitations due to OLF Experimental Crew Size

Paragraph 4.3.4 states that the normal 4-man crew on the initial OLF will be fully occupied in OLF activities, and this crew would have little or no unscheduled time for other activities. Further, during OLO the additional crew members needed to perform the necessary checkout and OLV manning requirements will bring the total number of personnel on board the OLF up a level which is near or equal to the maximum limit imposed by the limited living space, environment control system, and life support system. The initial OLF is capable of supporting a total of 12 men on a continuous basis or 18 men for a period not exceeding 15 days during each 90-day period. During the OLO planned for the initial OLF, one additional checkout man is needed during the full 170-day OLO period, with a second checkout man added 80 days prior to OLV launch, and 3 men to man the OLV required on board the last 11 days before launch. Advanced missions will require greater numbers of men, but such missions are not planned to be performed by the initial OLF. As a result, the OLF is able to support 8 experimental specialists at all times except during OLO, when the experimental crew must be reduced to 7 men at the beginning of the OLO or to 6 men for the last 80 days. While any personnel added to the OLF crew for the purpose of conducting experimentation would not be normally expected to participate in the normal OLF operation activities, it is considered desirable that these specialists be trained to fill in as temparary crew members in event of emergency.

Certain of these limiting factors are fixed by the OLF design requirements imposed by the OLO demands or launch restrictions, while others have been selected only to meet minimum levels required for OLO demands or for convenience in design. Those factors which limit experiments, and are the result of providing either convenience in design or only a minimum level that satisfied the OLO demands, may be varied to suit experimental requirements by modifications to the design and these changes will have little or no effect on the OLF's ability to perform its OLO functions. These modifications are discussed in Paragraph 6.2.3.

6.2.2.2 Level of Importance for OLF Performance. - The area of the importance of performing an experiment on the initial OLF divides all proposed experiments into two major groups, those experiments which are desirable, but are not necessary to perform on the OLF, and which for the purposes of this study are identified as general knowledge experiments, and those experiments which must be performed on the OLF. The second of these major groups may be further subdivided into those experiments which are required to insure OLF crew safety, and those experiments required to define AOLO concepts. The following discussions provide a more detailed definition of the group and subgroups of experiments.

a. General Knowledge Experiments

These experiments do not provide any direct implications to space travel, but are necessary to increase man's knowledge and comfort in a number of other fields. Experiments in this group should be selected only for performance on the OLF, provided they do not exceed the limitations placed on the OLF by performing its OLO functions and by performing those experiments included in lists of required experiments. The experiments shown in Figure 6.2-1, which are of the general knowledge type, are numbers 1 through 6 and 8 through 75.

b. Experiments Required on the OLF

1. OLF Experiments for AOLO Definition. - Experiments which provide data needed to define either OLO or the Advanced OLFs must be accomplished on the initial OLF, unless such data has been obtained as a result of experimentation conducted during programs preceding the initial OLF. The initial OLF will be the first orbiting space vehicle with a hangar of sufficient size to house the OSAV for storage and maintenance, and since this vehicle will be required for AOLO, all experimentation required to create and verify the necessary handling equipment and operational procedures for this vehicle must be conducted on the OLF. These experiments include numbers 76 through 97 of Figure 6.2-1.

2. OLF Crew Safety Experiments. - Experiments such as monitoring the EC/LS systems and radiation levels of OLF living and work areas are required throughout the initial OLF life, as data collected from such experiments is necessary to verify that the OLF is safe for continued habitation. These experiments must be repeated on a scheduled plan and for this reason may be considered to be part of the scheduled maintenance for the OLF. Only one experiment shown in Figure 6.2-1 provides the data required in this group, Experiment No. 7.

6.2.2.3 Experiments Considered for Performance on OLF. - Experiments which have been considered for performance on the initial OLF include all those identified in other programs reviewed in this study, in addition to those which have been identified during this study, except for those experiments which must be performed prior to the initial OLF launch to define OLO. The experiments which have been

EXP. NO.	INFO. SOURCE	EXPERIMENT TITLE	EXPERIMENT REQUIREMENTS							OLF PERFORMANCE	
			POWER KWH	MASS KG *	VOLUME METER	DURATION	CREW		ORBIT REQ'D.	REQ'D.	FEASIBLE
							NO. OF MEN	MAN-HOURS			
1	C-1	Effects of Zero- at the Subcellular Levle	4.64	34.47	.105	91 days	1	12	any	Des.(1)	Yes
2	C-2	Effects of Zero-g and Radiation on Bacteria	71.7	112	.144	40 days	1	30	any	Des.(1)	Yes
3	C-3	Effects of Zero-g on Paramecium and Hela Cells	92.7	57.12	.136	40 days	1	20	any	Des.(1)	Yes
4	C-4	Effects of Zero-g on Newly Fertilized Eggs	94.1	89.8	.110	89 days	1	26	any	Des.(1)	Yes
5	C-5	Effects of Radiation and Zero-g on Differentiation in Flour Beetle	55.3	56.2	.102	30 days	1	15	any	Des.(1)	Yes
6	C-6	Effects of High Vacuum & Radiation on Bacteria	13.2	49.9	.082	15 days	1	68	any	Des.(1)	Yes
7	C-7	Biological Monitoring of Life Support Systems	4050	21.77	.082	cont.	1	365/yr	any	yes	yes
8	C-8	Functional & Morphological Responses in Rodents	349	177.4	.750	90 days	1	720	any	Des.(1)	Yes
9	C-9	Effect of Zero-g on Immune Defenses	21.7	78.9	.813	36 days	1	27	any	Des.(1)	Yes
10	C-10	Effect of Zero-g on Dividing Human Cells	36.6	104.3	.295	30 days	2	480	any	Des.(1)	Yes
11	C-11	Germination, etc. Plant Studies During Zero-g	320	226.8	.295	42 days	1	21	any	Des.(1)	Yes

Figure 6.2-1: OLF R&D SCIENTIFIC EXPERIMENTS

EXP. NO.	INFO. SOURCE	EXPERIMENT TITLE	EXPERIMENT REQUIREMENTS							OLF PERFORMANCE	
			POWER KWH	MASS KG *	VOLUME METER	DURATION	CREW		ORBIT REQ'D.	REQ'D.	FEASIBLE
							NO OF MEN	MAN-HOURS			
12	C-12	Animal Adjustment to Various Forces	18.6	44.0	.195	91 days	1	10	any	Des.(1)	Yes
13	C-13	Effect of Zero-g on DNA	12.7	47.62	.569	5 days	1	5	any	Des.(1)	Yes
14	C-15	Function of Gravity-sensitive Organs in Zero-g	24.3	13.61	.031	81 days	1	59	any	Des.(1)	Yes
15	C-16	Effect of Space Environment on Daphnia Pulex	3.6	28.12	.045	30 days	1	30	any	Des.(1)	Yes
16	C-17	Discrimination & communication of Animals under Zero-g	43.7	59.9	.059	30 days	1	30	any	Des.(1)	Yes
17	C-18	Study of Photosynthetic Action Spectra of Algae Cultures	57	54.9	.110	6 days	1	6	any	Des.(1)	Yes
18	C-19	Changes in Sex Distribution of Off-spring Conceived, etc. in the Weightless State.	160	32.2	.127	109 days	1	218	any	Des.(1)	Yes
19	C-24	Collecting Micro-organisms	11.2	99.8	.824	5 days	1	15	any	Des.(1)	Yes
20	E-1	Study of the Operation of a Large Aperature Telescope Part I	66	1459	3.908	135 days	1	368	any	Des.(2)	Yes(3)
21	E-1	Study of the Operation of a Large Aperature Telescope - Part II	72	1459	3.908	147 days	1	400	any	Des.(2)	Yes(3)
22	E-3	Space Radiation Telescope	176	95.3	.334	1 yr	1	36.5	any	Des.(2)	Yes(3)
23	E-6	Solar Telescope, Part I	.59	53.5	.116	46 days	1	10	any	Des.(2)	Yes(3)
24	E-6	Solar Telescope, Part II	3.25	53.5	.116	250 days	1	55	any	Des.(2)	Yes(3)

Figure 6.2-1: OLF R&D SCIENTIFIC EXPERIMENTS (CONTINUED)

EXP. NO.	INFO. SOURCE	EXPERIMENT TITLE	EXPERIMENT REQUIREMENTS							OLF PERFORMANCE	
			POWER KWH	MASS KG *	VOLUME METER	DURATION	CREW		ORBIT REQ'D.	REQ'D.	FEASIBLE
							NO. OF MEN	MAN-HOURS			
25	F-3	Artificial Meteors	.164	41.7	.048	172 days	1	40	any	Des.(1)	Yes
26	F-4	Observation of Ionized Clouds in Space	1.44	1388	3.851	271 days	1	8	any	Des.(1)	Yes
27	F-5	High Energy Particle Physics	43.8	76.2	.314	1 yr	2	52	any	Des.(1)	Yes
28	F-6	Vacuum Ultraviolet & Soft X-ray Spectroscopy	17.6	1381	3.965	301 days	1	160	any	Des.(2)	Yes (3
29	F-9	Planetary & Satellite Surface Properties	0	95.3	.136	1 day	1	3	any	Des.(1)	Yes
30	F-10	Multispectral Sensing System	4.44	333.8	.524	358 days	1	104	any	Des.(1)	No
31	F-11	Evaluation of High Resolution Space Photogrammetry	1.2	397.4	.841	88 days	1	30	any	Des.(1)	No
32	F-12	Observation of Earth Surface Detail in 8- to 160 Micron Bandpass	225	394.6	.487	295 days	1	400	any	Des.(1)	No
33	F-13	Electro-optical Experiment	13.5	332.9	.818	357 days	1	90	any	Des.(1)	Yes(3)
34	G-1	Drag Studies	6.8	129.3	.677	20 days	1	38	any	Des.(1)	Yes
35	G-2	Zero Pressure Chemical Reactions	80	88.5	.405	35 days	1	40	any	Des.(1)	Yes
36	G-3	Density Profiles of Liquid in the Critical Region	5.77	104.3	.161	271 days	1	24	any	Des.(1)	Yes
37	G-4	Absorption of Gases on Solid Surfaces	80	93.0	.406	35 days	1	60	any	Des.(1)	Yes

Figure 6.2-1: OLF R&D SCIENTIFIC EXPERIMENTS (CONTINUED)

EXP. NO.	INFO. SOURCE	EXPERIMENT TITLE	EXPERIMENT REQUIREMENTS							OLF PERFORMANCE	
			POWER KWH	MASS KG *	VOLUME METER	DURATION	CREW		ORBIT REQ'D.	REQ'D.	FEASIBLE
							NO. OF MEN	MAN-HOURS			
38	G-5	Methods to Obtain Localized Ultra-high Vacuum	47.2	88.5	.402	47 days	1	64	any	Des.(1	Yes
39	G-6	Non-gravitational Forces	25.7	15.0	.071	1 yr	1	288	any	Des.(1	Yes
40	102500	Total Blood Volume	N/A	N/A	N/A	N/A	N/A	40	any	Des.(1	Yes
41	200024	Ion Propulsion Study	.025	96.2	.142	45 days	N/A	80	any	Des.(1	No
42	205000	Three Axis Helium Magnetometer	184	1.00	--	cont.	1	5	polar	Des.(1	No
43	221000	Modulation-inducing Retro Direction Mirror System (MIROS)	N/A	2.72	.057	N/A	1	2	N/A	Des.(1	No
44	222000	Hydrogen and Hydroxyl Radical Micro-wave Radiometric Survey	15	163.3	.227	1/8 orbits	1	200	any	Des.(1	No
45	274000	Geoscience Materials Laboratory	0	136.1	.566	cont.	1	10	any	Des.(1	Yes
46	15	Passive Mass Sensor - Visual Area Determination								Des.(1	Yes
47	25	Space Bug Control								Des.(1	Yes
48	41	Active Mass Sensor Evaluation (Direct Contact Tripod)	- - -	- -- -	CLASSIFIED	- -	- - -	- - -	- -	Des.(1	No
49	94	Assessment of Electronic Vulnerability, Communications System								Des.(1	Yes
50	116, 116-1	Investigation/Demonstration Masking Techniques								Des.(1	Yes

Figure 6.2-1: OLF R&D SCIENTIFIC EXPERIMENTS (CONTINUED)

EXP. NO.	INFO. SOURCE	EXPERIMENT TITLE	EXPERIMENT REQUIREMENTS							OLF PERFORMANCE	
			POWER KWH	MASS KG *	VOLUME METER	DURATION	CREW		ORBIT REQ'D.	REQ'D.	FEASIBLE
							NO. OF MEN	MAN-HOURS			
51	118	Sea Surveillance	- -	- - - -	CLASSIFIED -		- - - -	- - -	- -	Des.(1)	No
52	120	Launch Detection and Early Warning								Des.)1)	Yes
53	119	Sea State-visible IR Microwave								Des.(1)	Yes
54	1	IR Reconnaissance System								Des.(1)	No
55	132	Passive Direction Finding - IBM								Des.(1)	Yes
56	134	Spaceborne Traget Discrimination System								Des.(1)	Yes
57	AA-1	Radiative Transfer Characteristics of Earth's Atmosphere	2000	226.8	.566	60 days	3	540	371 km/ 60°	Des.(1)	No
58	AA-2	Upper Atmosphere Chemistry & Physics	1000	226.8	.283	60 days	2	240	*** 371 km/ 60°	Des.(1)	No
59	AA-4	Weather R^e^connaissance	500	45.4	.142	60 days	2	300	N/A	Des.(1)	No
60	CC-1	Sea State, Tsunamis and Ocean Slope Measurement	1500	61.2	.935	30 days	1	30	371/km/ 60°	Des.(1)	No
61	CC-2	Subsurface Oceanographic Parameters	1800	11.79	.028	90 days	1	20	371 km/ 60°	Des.(1)	No
62	CC-3	Two dimension Temperature Spectrum of Ocean Surface	120	4.99	.028	30 days	1	120	371 km/ 60°	Des.(1)	No
63	CC-4	Surface Salinity Spectrum Determination	2400	22.68	.283	10 days	2	160	371 km/ 60°	Des.(1)	No

Figure 6.2-1: OLF R&D SCIENTIFIC EXPERIMENTS (CONTINUED)

EXP. NO.	INFO. SOURCE	EXPERIMENT TITLE	EXPERIMENT REQUIREMENTS							OLF PERFORMANCE	
			POWER KWH	MASS KG *	VOLUME METER	DURATION	CREW		ORBIT REQ'D.	REQ'D.	FEASIBLE
							NO. OF MEN	MAN-HOURS			
64	CC-5	Sea Color Distribution	112	22.68	.056	7 days	3	42	371 km/ 60°	Des.(1)	No
65	CC-8	Oceanography and Geophysics	2000	52.2	.396	30 days	1	75	60°	Des.(1)	No
66	DD-8	Cosmic Noise Study	1200	7.93	.028	50 days	1	5	70°	Des.(1)	No
67	DD-9	Particle Injection Study	36000	56.6	.142	30 days	1	60	70°	Des.(1)	No
68	DD-10	Auroral Survey	56940	1.36	.056	5 yrs	1	1/wk	70°	Des.(1)	No
69	EE-1	Infrared vs. Panchromatic Film	500	181.4	.368	90 days	1	252	371 km/ 60°	Des.(1)	No
70	EE-4	Effect of S/C Environment on Development Process	10	156.5	.312	30 days	3	180	371 km/ 60°	Des.(1)	No
71	EE-7	Effect of Velocity on Resolution	400	154.2	.312	15 days	2	60	371 km/ 60° Ellip.	Des.(1)	No
72	EE-9	Effects of Perturbations on Orbital Pach	375	192.8	.340	30 days	2	60	371 km/ 60°	Des.(1)	No
73	EE-13	Test of Lasses Response	225	108.9	.142	60 days	2	60	371/km/ 60°	Des.(1)	No
74	EE-14	Fidelity of Image	500	158.8	.396	15 days	1	45	371 km/ 60°	Des.(1)	No.

Figure 6.2-1: OLF R&D SCIENTIFIC EXPERIMENTS (CONTINUED)

EXP. NO.	INFO. SOURCE	EXPERIMENT TITLE	EXPERIMENT REQUIREMENTS							OLF PERFORMANCE	
			POWER KWH	MASS KG *	VOLUME METER	DURATION	CREW		ORBIT REQ'D.	REQ'D.	FEASIBLE
							NO. OF MEN	MAN-HOURS			
75	EE-15	Imagery Characteristics	500	136.1	.368	15 days	1	45	371 km/ 60°	Des.(1)	No
76	D/ZG-100	Docking of Complete OSAV to OLF - Non-rotating OLF	0	6300	40.6	10 oper.	2	1/oper	Any	Yes	Yes
77	D/ZG-101	Separation of Complete OSAV from OLF - Non-rotating OLF	0	6300	40.6	10 oper.	2	1/oper	Any	Yes	Yes
78	D/ZG-102	Docking of OSAV/CM to OLF - Non-rotating OLF	0	1300	5.1	10 oper.	2	1/oper	Any	Yes	Yes
79	D/ZG-103	Separation of OSAV/CM from OLF - Non-rotating OLF	0	1300	5.1	10 oper.	2	1/oper	Any	Yes	Yes
80	CT/ZG-100	OSAV/PM and OSAV/CM Ingress from Docking Ports to OLF Hangar - Non-rotating OLF	12.5/ oper	5000	41.1	10 oper.	3	1.5/ Oper	Any	Yes	Yes
81	CT/ZG-101	OSAV/CM and OSAV/PM Egress from OLF Hangar to Docking Ports - Non-Rotating	12.5/ Oper.	5000	41.1	10 oper.	3	1.5/ Oper	Any	Yes	Yes
82	CT/ZG-102	OSAV/CM Ingress to OLF Hangar from Docking Port - Non-rotating OLF	12.5/	1200	5.6	10 oper.	3	1.5/ Oper	Any	Yes	Yes
83	CT/ZG-103	OSAV/CM Egress from OLF Hangar to Docking Port - Non-rotating OLF	12.3/ Oper.	1200	5.6	10 oper	3	1.5/ Oper.	Any	Yes	Yes
84	D/AG-100	Docking of Complete OSAV to OLF - Rotating OLF	0	6300	40.6	10 oper.	2	1/oper	Any	Yes	Yes

Figure 6.2-1: OLF R&D SCIENTIFIC EXPERIMENTS (CONTINUED)

EXP. NO.	INFO. SOURCE	EXPERIMENT TITLE	EXPERIMENT REQUIREMENTS							OLF PERFORMANCE	
			POWER KWH	MASS KG *	VOLUME METER	DURATION	CREW		ORBIT REQ'D.	REQ'D.	FEASIBLE
							NO. OF MEN	MAN-HOURS			
85	D/AG-101	Separation of Complete OSAV from OLF-Rotating OLF	0	6300	40.6	10 oper.	2	1/oper	Any	Yes	Yes
86	D/AG-102	Docking of OSAV/CM to OLF - Rotating OLF	0	1300	5.1	10 oper.	2	1/oper	Any	Yes	Yes
87	D/AG-103	Separation of OSAV/CM from OLF Rotating OLF	0	1300	5.1	10 oper	2	1/oper	Any	Yes	Yes
88	CT/AG-100	OSAV/PM and OSAV/CM Ingress from Docking Ports to OLF Hangar - Rotating OLF	13.0/ oper	5000	41.1	10 oper.	3	1.5/ oper.	Any	Yes	Yes
89	CT/AG-100	OSAV/CM and OSAV/PM Egress from OLF Hangar to Docking Ports - Rotating OLF	13.0/ oper.	5000	41.1	10 oper	3	1.5/ oper.	Any	Yes	Yes
90	CT/AG-102	OSAV/CM Ingress to OLF Hangar from Docking Port - Rotating OLF	12.5/ Oper	1200	5.6	10 oper.	3	1.5/ Oper	Any	Yes	Yes
91	CT/AG-103	OSAV/CM Egress from OLF Hangar to Docking Port - Rotating OLF	12.5/ Oper.	1200	5.6	10 oper.	3	1.5/ Oper.	Any	Yes	Yes
92	CT/SE-100	Cargo Transfer - Small Containers Using OSAV/CM.	4.0	1500	7.0	2 days	3	100	Any	Yes	Yes

Figure 6.2-1: OLF R&D SCIENTIFIC EXPERIMENTS (CONTINUED)

Exp. No.	Info. Source 1	EXPERIMENT TITLE	EXPERIMENT REQUIREMENTS							OLF PERFORMANCE	
			Power KWH	Mass kg *	Volume Meter **	Duration	CREW		Orbit Req'd.	Req'd.	Feasible
							No. of Men	Man-hours			
93	CT/SE-101	Cargo Transfer - Large Containers OSAV/CM for Command	0	121,000	N/A	2 days	2	96	Any	Yes	Yes
94	CT/SE-102	Cargo Transfer - Personnel and Equipment Using Complete OSAV	0	6300	40.6	2 days	3	110	Any	Yes	Yes
95	CT/SE-103	Satellite Retrieval and Reorbit Using OSAV/CM	6.0	1500	7.0	4 days	2	192	Any	Yes	Yes
96	EA-100	Alignment and Assembly of OLV Using OSAV/CM as a Space Tug	0	234,000	N/A	2 days	2	96	Any	Yes	Yes
97	MR-100	OLV Maintenance and Repair Operations Using OSAV/CM	0	1400	5.0	20 days	2	320	Any	Yes	Yes

NOTES: --

(1) The performance of this experiment on the initial OLF is desirable if it has not been completed by some earlier program.

(2) This experiment is of a continuous nature and is desirable to be continued on every orbiting vehicle capable of meeting the experimental requirements.

Figure 6.2-1: OLF R&D SCIENTIFIC EXPERIMENTS (CONTINUED)

EXP. NO.	INFO. SOURCE 1	EXPERIMENT TITLE	EXPERIMENT REQUIREMENTS							OLF PERFORMANCE	
			POWER KWH	MASS kg *	VOLUME METER **	DURATION	CREW		ORBIT REQ'D	REQ'D.	FEASIBLE
							NO. OF MEN	MAN-HOURS			

NOTES - Continued

(3) OLF attitude control and stabilization system is not capable of maintaining the platform stabilization required for this experiment, however, the OLF can support a separate experimental equipment module by providing personnel living quarters, data collecting and transmission facilities, spares storage, and maintenance facilities.

N/A Indicates that data is not available.

* Mass in kilograms may be converted to weight in pounds by multiplying given values by 2.202.

** Volumes in cubic meters may be converted to cubic feet by multiplying given values by 35.31

*** Distances in kilometers may be converted to nautical miles by multiplying given values by 0.5396.

1 Detailed experimental information for listed experiments may be obtained as follows:

Experiments 1 through 39, see reference 22
Experiments 40 through 45, see reference 23
Experiments 46 through 56, see reference 24
Experiments 57 through 75, see reference 25
Experiments 76 through 97, see paragraph 6.2.2.1.

Figure 6.2-1: OLF R&D SCIENTIFIC EXPERIMENTS (CONTINUED)

identified during this study and which have not been included in any of the experiment lists from the other programs reviewed are those needed to define the concept and operations of the OSAV. No handling equipment nor operating procedures have been developed for moving the OSAV from the exterior Apollo docking ports into the OLF hangar, nor have the operating procedures for using the OSAV been developed. The OSAV concept provides two modules which combine to make up the OSAV. These vehicles are the OSAV Command Module (OSAV/CM), and the OSAV Personnel Module (OSAV/PM). The OSAV/CM is a two-man, self-propelled independent vehicle which consists of a hatch with Apollo-type docking provisions, environmental control for two men up to 48 hours, a propulsion system to maneuver within a 37.1 km (20 n.mi.) radius, (or by minor modification increased to a range of 101.3 km (60 n.mi.) radius), an attitude control and stabilization system, a set of electromagnetic pads on its lower concave surface capable of holding the module to any cylindrical vehicle with a curvature equal to 2.74 meters (9 feet) in diameter up to 10.1 meters (33 feet) in diameter, a RF command system capable of controlling the propulsion system of any large vehicle to which the module is attached, and a pair of external manipulator arms, located in view of the crew, that are capable of holding small items of cargo or being controlled to perform maintenance activities. The OSAV/PM is a large personnel and equipment carrier that is dependent upon the OSAV/CM for control of its propulsion and guidance system. Provisions on the OSAV/PM include an environmental control system adequate to support 15 men up to 48 hours, total personnel and cargo capacity up to 1361 kg (93.24 slugs) in mass, a propulsion and attitude control system with sufficient propellants to maneuver the module through a range of 37.1 km (20 n.mi.) radius, a RF control system permitting the OSAV/CM to direct and control the propulsion system, and an air lock with Apollo-type docking provisions. The foregoing OSAV concept and the hangar provisions of the OLF indicate that to develop and prove the operational equipment and procedures, the following experiments must be conducted on the initial OLF:

a. Docking of complete OSAV to OLF - Non-rotating OLF (D/ZG-100)

b. Separation of complete OSAV from OLF - Non-rotating OLF (D/ZG-101)

c. Docking of OSAV/CM to OLF - Non-rotating OLF (D/ZG-102)

d. Separation of OSAV/CM for OLF - Non-rotating OLF (D/ZG-103)

e. OSAV/PM and OSAV/CM ingress from docking ports to OLF hangar - Non-rotating OLF (CT/ZG-100)

f. OSAV/CM and OSAV/PM egress from OLF hangar to docking ports - Non-rotating OLF (CT/ZG-101)

g. OSAV/CM ingress to OLF hangar from docking port - Non-rotating OLF (D/ZG-102)

h. OSAV/CM egress from OLF hangar to docking port- Non-rotating OLF (CT/ZG-103)

i. Docking of complete OSAV to OLF - Rotating OLF (D/AG-100)

j. Separation of complete OSAV from OLF - Rotating OLF (D/AG-101)

k. Docking of OSAV/CM to OLF - Rotating OLF (D/AG-102)

l. Separation of OSAV/CM from OLF - Rotating OLF (D/AG-103)

m. OSAV/PM and OSAV/CM ingress from docking ports to OLF hangar - Rotating OLF (CT/AG-100)

n. OSAV/CM and OSAV/PM egress from OLF hangar to docking ports - Rotating OLF (CT/AG-101)

o. OSAV/CM ingress to OLF hangar from docking port - Rotating OLF (CT/AG-102

p. OSAV/CM egress from OLF hangar to docking port - Rotating OLF (CT/AG-103)

q. Cargo transfer - small containers using OSAV/CM for command (CT/SE-100)

r. Cargo transfer - large containers using OSAV/CM for command (CT/SE-101)

s. Cargo transfer - personnel and equipment using complete OSAV (CT/SE-102)

t. Satellite retrieval and reorbiting using OSAV/CM (CT/SE-103)

u. Alignment and assembly of OLV - using OSAV/CM as a space tug (EA-100)

v. OLV maintenance and repair operations - using OSAV/CM (MR-100)

This list of twenty-two experiments, together with those from the other programs reviewed which are not required prior to the OLF launch, provide a total of 97 experiments investigated by this study. These 97 experiments are shown in Figure 6.2-1 and this table provides the information source, experiment title, general experimental requirements, and an indication of the desirability and feasibility of performing each of these experiments on the initial OLF. As noted in Paragraph 6.2. , no attempt is made to schedule these experiments for performance on the OLF, but only provide a list of experiments which should be considered and to identify those which are most urgently required for completion on the initial OLF.

Experiments 1 through 6, 8 through 19, 25 through 27, 29, 34 through 40, 45 through 47, 49, 50, 52, 53, 55, and 56 are 38 experiments which are both desirable and feasible to be accomplished on the initial OLF. These experiments are all being considered for performance on orbiting vehicles presently planned to be orbited earlier than the initial OLF, and if accomplished by this earlier vehicle, they need not be considered for scheduling into the initial OLF experimental program. However, if any of these experiments must be omitted from the experimental programs for which they are presently being considered, then it is highly desirable to schedule them in the initial OLF experimental program.

Experiments 20 through 24 and 28 are desirable for accomplishment on the initial OLF, irrespective of whether or not these experiments have been conducted on earlier orbiting laboratories. The nature of the subjects being studied in these experiments is of the type that continued experimentation for a large number of years will not provide all the usable data that these experiments are capable of providing. The initial OLF does not provide the degree of stabilization necessary to provide the stable platform required by these experiments, thereby precluding the possibility of performing these experiments on the OLF. However, if an experimental module can either be orbited in the near proximity of the OLF or tethered to the OLF and provide the experimental equipment with its required degree of stability, then the OLF can support such a module by supplying it with living quarters for the experimental personnel, data recording and transmission equipment, spares storage, and maintenance equipment and personnel. (Fig. 6.2-2)

Experiment 33 is the only one presently being considered for another orbiting laboratory, which is now planned for orbiting before the initial OLF and which would also require a greater degree of stabilization than is available for the initial OLF. If this experiment is not conducted by one of the laboratories orbited prior to the OLF, then it is highly desirable to consider this experiment for scheduling in the OLF program, provided the stable platform needed for the experiments discussed in the preceding paragraph is available.

Experiments 30 through 32, 41 through 44, 48, 51, 54, and 57 through 75 are 29 experiments which require orbits or other parameters which can not be provided by the initial OLF. No permissible modification to the initial OLF would make it suitable for conducting these experiments, therefore, no further consideration for attempts to conduct them on the OLF is advisable.

Experiments 7 and 76 through 97 are the 23 remaining experiments and are all in the group of experiments of required initial OLF experiments. All of these experiments may be performed on the initial OLF; however, some minor modification to the Baseline OLF as proposed will be required. All these experiments are capable of being performed within the initial OLF experiment limitations discussed previously with the single exception of electrical power requirements. Eleven of these experiments require greater amounts of electrical power than is available on the initial OLF after normal operating requirements are taken from the total made available by the proposed generating system. The recommended modifications for this system are discussed in Paragraph 6.2.3.

6.2.2.4 Experiment Definitions. - The titles of the ninety-seven experiments do not, in many cases, provide a true indication of the objective, requirements, or the experimental procedures for these experiments. To obtain this information, it is necessary to study the experimental briefs or definitions. For a large number of the experiments listed, these experimental briefs are available, as noted by the references shown at the end of the table; however, for experiments 76 through 97, no briefs have been developed in earlier studies. With the need to have the data contained in such experimental briefs in order to complete experiment selection and scheduling, the following briefs are provided:

DESCRIPTION - AOLO EXPERIMENT FOR OLF

EXP. NO. D/ZG-100

1. EXPERIMENT CATEGORY: Docking/Zero Gravity

1.1 EXPERIMENT TITLE: Docking of Complete OSAV to OLF - Non-rotating OLF

2. JUSTIFICATION:

a. This experiment is needed to develop and verify the OSAV operational concept.

b. This experiment is needed in orbit in that Earth simulations are too costly and would not provide all the necessary conditions.

c. This experiment as presented provides the only presently known means of developing and verifying the required procedures.

d. The OLF is the first orbiting vehicle providing the space necessary for evaluating the OSAV and the evaluation is required prior to AOLO.

3. SUMMARY DESCRIPTION:

The complete OSAV consists of two modules, the OSAV/PM with the OSAV/CM attached to its outer surface so that the OSAV/CM pilot can see the OSAV/PM air lock and can provide the necessary control to the combined vehicle. The procedures for docking the OSAV, as developed by Earth studies, must be verified and crews must be trained to use the vehicle prior to AOLO. The two modules must be docked in such a manner that the personnel in each module may evacuate from the modules into the OLF. OLF rotation for artificial gravity must be stopped prior to start of the docking attempt and may be restarted following completion of the docking operations.

4. OPERATIONAL PROCEDURE:

The OSAV, consisting of the OSAV/PM and OSAV/CM, is docked to the OLF at the docking port provided for the Apollo logistics vehicle, which is located adjacent to the OLF hangar hatch and using the OSAV/PM air lock as the docking connection. The OSAV/CM is then separated from the OSAV/PM and individually docked at the opposite Apollo logistics vehicle docking port.

ORBIT REQUIREMENTS: Any OSAV to start docking maneuver from a point not greater than 3.7 km (2 n.mi.) from OLF.

EXPERIMENT MASS (KILOGRAMS): 6,300 (13,873 lbs)

EXPERIMENT VOLUME (METERS^3): 40.6 (1.434 ft^3)

EXPERIMENT POWER (WATTS): 0

EXPERIMENT DURATION (DAYS): Not applicable

NUMBER OF TIMES/FLIGHT: 10

EXPERIMENT MAN-HOURS/DAY: Not applicable

TOTAL EXPERIMENT MAN-HOURS: 10

5. EXPERIMENT SKETCH: Not applicable

DESCRIPTION - AOLO EXPERIMENT FOR OLF

EXP. NO. D/ZG-101

1. EXPERIMENT CATEGORY: Docking/Zero Gravity

1.1 EXPERIMENT TITLE: Separation of complete OSAV from OLF - Non-rotating OLF

2. JUSTIFICATION:

a. This experiment is needed to develop and verify the OSAV operational concept.

b. This experiment is needed in orbit in that Earth simulations are too costly and would not provide all the necessary conditions.

c. This experiment as presented provides the only presently known means of developing and verifying the required procedures.

d. The OLF is the first orbiting vehicle providing the space necessary for evaluating the OSAV and the evaluation is required prior to AOLO.

3. SUMMARY DESCRIPTION:

The complete OSAV consists of two modules, the OSAV/CM and the OSAV/PM. In the docked position the OSAV/PM is docked to the OLF at the docking port provided for the Apollo logistics vehicle and located adjacent to the hangar hatch, while the OSAV/CM is docked at the opposite Apollo logistics vehicle dock. Procedures for manning, joining, and launch of these modules, as developed by Earth studies, must be verified and crews trained to use the vehicle prior to AOLO. OLF rotation for artificial gravity must be stopped prior to start of the OSAV separation attempt and may be restarted following completion of the OSAV separation operations.

EXP. NO. D/ZG-101

4. OPERATIONAL PROCEDURE:

With the modules docked to the OLF, as noted in Paragraph 3, the two-man crew for the OSAV/CM may enter their vehicle from the OLF and the cargo and passengers may be loaded into the OSAV/PM under shirtsleeve conditions. When the modules are loaded, the OSAV/CM leaves its dock and is maneuvered into position and attached to the OSAV/PM. The OSAV/CM pilot can now control the complete vehicle which at this time is released from the docking port and maneuvered away from the OLF.

ORBIT REQUIREMENTS: Any OSAV to complete separation maneuvers at a distance not greater than 3.7 km (2 n.mi.) from the OLF.

EXPERIMENT MASS (KILOGRAMS): 6,300 (13,873 lbs)

EXPERIMENT VOLUME (METERS^3): 40,6 (1,434 ft^3)

EXPERIMENT POWER (WATTS): 0

EXPERIMENT DURATION (DAYS): Not applicable

NUMBER OF TIMES/FLIGHT: 10

EXPERIMENT MAN-HOURS/DAY: Not applicable

TOTAL EXPERIMENT MAN-HOURS: 10

5. EXPERIMENT SKETCH: Not applicable

DESCRIPTION - AOLO EXPERIMENT FOR OLF

EXP. NO. D/ZG-102

1. EXPERIMENT CATEGORY: Docking/Zero Gravity

1.1 EXPERIMENT TITLE: Docking of OSAV/CM to OLF - Non-rotating OLF

2. JUSTIFICATION:

a. This experiment is needed to develop and verify the OSAV operational concept.

b. This experiment is needed in orbit in that Earth simulations are too costly and would not provide all the necessary conditions.

c. This experiment as presented provides the only presently known means of developing and verifying the required procedures.

d. The OLF is the first orbiting vehicle providing the space necessary for evaluating the OSAV and the evaluation is required prior to AOLO.

3. SUMMARY DESCRIPTION:

The OSAV consists of two modules, the OSAV/PM and the OSAV/CM, and under the present concept, these modules may be used either in combination or the OSAV/CM by itself. The docking procedures for docking the OSAV/CM as developed by Earth studies must be verified and crews trained to use the module prior to AOLO. The OSAV/CM must be docked to the OLF in such a manner that the crew may evacuate from the module into the OLF. OLF rotation for artificial gravity must be stopped prior to start of the docking attempt and may be restarted following completion of the docking operations.

4. OPERATIONAL PROCEDURE:

The OSAV/CM, piloted by its two-man crew, must rendezvous and dock with the OLF. The docking is to be performed at the OLF docking port provided for the Apollo logistics vehicle, which is located adjacent to the OLF hangar hatch.

ORBIT REQUIREMENTS: Any OSAV/CM to start rendezvous and docking maneuvers from a point not greater than 3.7 km (2 n.mi.) from OLF.

EXPERIMENT MASS (KILOGRAMS): 1,300 (2,863 lbs)

EXPERIMENT VOLUME (METERS^3): 5.1 (180 ft.^{3})

EXPERIMENT POWER (WATTS): 0

EXPERIMENT DURATION (DAYS): Not applicable

NUMBER OF TIMES/FLIGHT: 10

EXPERIMENT MAN-HOURS/DAY: Not applicable

TOTAL EXPERIMENT MAN-HOURS: 10

5. EXPERIMENT SKETCH: Not applicable

DESCRIPTION - AOLO EXPERIMENT FOR OLF

EXP. NO. D/ZG-103

1. EXPERIMENT CATEGORY: Docking/Zero Gravity

1.1 EXPERIMENT TITLE: Separation of OSAV/CM from OLF - Non-rotating OLF

2. JUSTIFICATION:

a. This experiment is needed to develop and verify the OSAV operational concept.

b. This experiment is needed in orbit in that Earth simulations are too costly and would not provide all the necessary conditions.

c. This experiment as presented provides the only presently known means of developing and verifying the required procedures.

d. The OLF is the first orbiting vehicle providing the space necessary for evaluating the OSAV and the evaluation is required prior to AOLO.

3. SUMMARY DESCRIPTION:

The OSAV consists of two modules, the OSAV/PM and the OSAV/CM, and under the present concept these modules may be used either in combination or the OSAV/CM by itself. The procedures for separating the OSAV/CM from its dock at the OLF, as developed by Earth studies, must be verified and crews trained to use the module prior to AOLO. The OSAV/CM must be docked to the OLF, so that its crew can board it from the OLF, then separates to perform its mission. OLF rotation for artificial gravity must be stopped prior to start of the OSAV/CM separation attempt and may be restarted following completion of the OSAV/CM separation operations.

4. OPERATIONAL PROCEDURE:

The OSAV/CM is docked to the OLF docking port provided for the Apollo logistics vehicle and located adjacent to the OLF hangar hatch. In this configuration the OSAV/CM two-man crew may enter the vehicle under shirtsleeve conditions. Once the crew is aboard the OSAV/CM, it may be separated from the dock and be maneuvered away from the OLF.

ORBIT REQUIREMENTS: Any OSAV/CM to complete separation maneuvers at a distance not greater than 3.7 km (2 n.mi.) from the OLF.

EXPERIMENT MASS (KILOGRAMS): 1,300 (2,863 lbs.)

EXPERIMENT VOLUME (METERS^3): 5.1 (180 ft^3)

EXPERIMENT POWER (WATTS): 0

EXPERIMENT DURATION (DAYS): Not applicable

NUMBER OF TIMES/FLIGHT: 10

EXPERIMENT MAN-HOURS/DAY: Not applicable

TOTAL EXPERIMENT MAN-HOURS: 10

5. EXPERIMENT SKETCH: Not applicable

DESCRIPTION - AOLO EXPERIMENT FOR OLF

EXP. NO. CT/ZG-100

1. EXPERIMENT CATEGORY: Cargo Transfer/Zero Gravity

1.1 EXPERIMENT TITLE: OSAV/PM and OSAV/CM Ingress from Docking Ports to OLF Hangar - Non-rotating OLF

2. JUSTIFICATION:

a. This experiment is needed to develop and verify the OSAV operational concept.

b. This experiment is needed in orbit in that Earth simulations are too costly and would not provide all the necessary conditions.

c. This experiment as presented provides the only presently known means of developing and verifying the required procedures.

d. The OLF is the first orbiting vehicle providing the space necessary for evaluating the OSAV and the evaluation is required prior to AOLO.

3. SUMMARY DESCRIPTION:

The OSAV consists of two modules, the OSAV/PM and OSAV/CM, and when docked to the OLF the OSAV/PM is docked at the Apollo logistics vehicle docking port adjacent to the OLF hangar hatch, while the OSAV/CM is docked to the opposite Apollo logistics vehicle docking port. When the OSAV is not in use or when maintenance is required, the modules are moved into the OLF hangar. The handling equipment and procedures required to move these modules from the docking ports into the hangar, as developed by Earth studies, must be verified and crews must be trained in their use prior to AOLO. OLF rotation for artificial gravity must be stopped prior to start of the OSAV ingress attempt and may be restarted following completion of these operations.

EXP. NO. CT/ZG-100

4. OPERATIONAL PROCEDURE:

The OSAV modules are docked as noted in Paragraph 3 and the OLF hangar bay pump-down is started. When hangar pump-down is complete, the hangar hatch is opened and the handling mechanism is attached to the OSAV/PM. The handling mechanism now removes the OSAV/PM from the dock and swings it into the OLF hangar. The OSAV/CM crew enters their module and move it to the docking port by the hangar hatch, then evacuate the module. The handling mechanism is swung out of the hangar and is attached to the OSAV/CM. The handling mechanism now removes the OSAV/CM from the dock and moves it into the OLF hangar. The handling mechanism must next be stowed, the OLF hangar hatch closed, and the hangar bay is repressurized.

ORBIT REQUIREMENTS: Any

EXPERIMENT MASS (KILOGRAMS): 5,000 (11,010 lbs.)

EXPERIMENT VOLUME (METERS^3): 41.1 (1,451 ft.^{3})

EXPERIMENT POWER (WATTS): 2,000

EXPERIMENT DURATION (DAYS): .27/operation

NUMBER OF TIMES/FLIGHT: 10

EXPERIMENT MAN-HOURS/DAY: Not applicable

TOTAL EXPERIMENT MAN-HOURS: 15

5. EXPERIMENT SKETCH: Not applicable

DESCRIPTION - AOLO EXPERIMENT FOR OLF

EXP. NO. CT/ZG-101

1. EXPERIMENT CATEGORY: Cargo Transfer/Zero Gravity

1.1 EXPERIMENT TITLE: OSAV/CM and OSAV/PM Egress from OLF Hangar to Docking Ports - Non-rotating OLF

2. JUSTIFICATION:

a. This experiment is needed to develop and verify the OSAV operational concept.

b. This experiment is needed in orbit in that Earth simulations are too costly and would not provide all the necessary conditions.

c. This experiment as presented provides the only presently known means of developing and verifying the required procedures.

d. The OLF is the first orbiting vehicle providing the space necessary for evaluating the OSAV and the evaluation is required prior to AOLO.

3. SUMMARY DESCRIPTION:

The OSAV consists of two modules, the OSAV/PM and OSAV/CM, which are stored in the OLF hangar when not in use or when maintenance of the modules is required. When these modules are required for AOLO, they must be moved out of the hangar to the Apollo logistic vehicle docking ports for loading and manning. The OSAV/PM uses the docking port adjacent to the hangar hatch, while the OSAV/CM is docked at the opposite docking port. The handling mechanism required to move the modules from the hangar out through the hangar hatch to the docking port and the procedures needed to operate this mechanism, as developed by Earth studies, must be verified and crews must be trained in their use prior to AOLO. OLF rotation for artificial gravity must be stopped prior to start of OSAV egress attempt and may be restarted following completion of these operations.

EXP. NO. CT/ZG-101

4. OPERATIONAL PROCEDURE:

The OSAV modules are stored in the OLF hangar and hangar bay pump-down is started. When hangar pump-down is completed, the hangar hatch is opened and the handling mechanism is swung in through the hatch and attached to the OSAV/CM. Using the handling mechanism the OSAV/CM is swung out of the hangar to the Apollo logistics vehicle docking port adjacent to the hangar hatch. The OSAV/CM crew boards their module and move it to the opposite dock. The handling mechanism is swung back into the hangar and attached to the OSAV/PM, which is then swung out to the docking port adjacent to the hatch. The handling mechanism is then stored, the OLF hangar hatch is closed, and hangar bay is repressurized.

ORBIT REQUIREMENTS: Any

EXPERIMENT MASS (KILOGRAMS): 5,000 (11,010 lbs.)

EXPERIMENT VOLUME (METERS^3): 41.1 (1,451 ft^3)

EXPERIMENT POWER (WATTS): 2,000

EXPERIMENT DURATION (DAYS): .27/operation

NUMBER OF TIMES/FLIGHT: 10

EXPERIMENT MAN-HOURS/DAY: Not applicable

TOTAL EXPERIMENT MAN-HOURS: 15

5. EXPERIMENT SKETCH: Not applicable

DESCRIPTION - AOLO EXPERIMENT FOR OLF

EXP. NO. CT/ZG-102

1. EXPERIMENT CATEGORY: Cargo Transfer/Zero Gravity

1.1 EXPERIMENT TITLE: OSAV/CM Ingress to OLF Hangar from Docking Port - Non-rotating OLF

2. JUSTIFICATION:

a. This experiment is needed to develop and verify the OSAV operational concept.

b. This experiment is needed in orbit in that Earth simulations are too costly and would not provide all the necessary conditions.

c. This experiment as presented provides the only presently known means of developing and verifying the required procedures.

d. The OLF is the first orbiting vehicle providing the space necessary for evaluating the OSAV and the evaluation is required prior to AOLO.

3. SUMMARY DESCRIPTION:

The OSAV consists of two modules, the OSAV/CM and the OSAV/PM, which either may be used in combination or the OSAV/CM may be used by itself. When only the OSAV/CM is used, the OSAV/PM will be stored in the OLF hangar; this allows the OSAV/CM to be docked at the Apollo logistics vehicle docking port adjacent to the OLF hangar hatch. When the OSAV/CM is not in use or needs maintenance, it must be moved from the docking port into the hangar. The handling mechanism required to move the OSAV/CM from the docking port through the hangar door and into the hangar, and the procedures needed to operate this mechanism, as developed by Earth studies, must be verified and crews must be trained in their use prior to AOLO. OLF rotation for artificial gravity must be stopped prior to start of OSAV/CM egress attempt and may be restarted following completion of these operations.

EXP. NO. CT/ZG-102

4. OPERATIONAL PROCEDURE:

The OSAV/CM is docked to the OLF at the Apollo Logistics vehicle docking port adjacent to the hangar hatch and thenthe pump-down of the hangar bay is started. When hangar pump-down is completed, the hangar hatch is opened and the handling mechanism is extended and attached to the OSAV/CM. Using the handling mechanism, the OSAV/CM is removed from the docking port and swung through the hangar hatch into the hangar. The handling mechanism is then returned to its stowed position, the hangar hatch is closed, and then the hangar bay is repressurized.

ORBIT REQUIREMENTS: Any

EXPERIMENT MASS (KILOGRAMS): 1,200 (2.643 lbs.)

EXPERIMENT VOLUME (METERS^3): 5.6 (198 ft^3)

EXPERIMENT POWER (WATTS): 2,000

EXPERIMENT DURATION (DAYS): .27/operation

NUMBER OF TIMES/FLIGHT: 10

EXPERIMENT MAN-HOURS/DAY: Not applicable

TOTAL EXPERIMENT MAN-HOURS: 15

5. EXPERIMENT SKETCH: Not applicable

DESCRIPTION - AOLO EXPERIMENT FOR OLF

EXP. NO. CT/ZG-103

1. EXPERIMENT CATEGORY: Cargo Transfer/Zero Gravity

1.1 EXPERIMENT TITLE: OSAV/CM Egress from OLF Hangar to Docking Port - Non-rotating OLF

2. JUSTIFICATION:

a. This experiment is needed to develop and verify the OSAV operational concept.

b. This experiment is needed in orbit in that Earth simulations are too costly and would not provide all the necessary conditions.

c. This experiment as presented provides the only presently known means of developing and verifying the required procedures.

d. The OLF is the first orbiting vehicle providing the space necessary for evaluating the OSAV and the evaluation is required prior to AOLO.

3. SUMMARY DESCRIPTION:

The OSAV consists of two modules, the OSAV/CM and the OSAV/PM, which either may be used in combination or the OSAV/CM may be used by itself. Both modules are stored in the OLF hangar and when the OSAV/CM is to be used by itself, it must be moved out of the hangar to the Apollo ogistic vehicle docking port adjacent to the hangar hatch for manning and launch. The handling mechanism required to move the OSAV/CM from the hangar out through the hangar hatch to the docking port and the procedures needed to operate this mechanism, as developed by Earth studies, must be verified and crews must be trained in their use prior to AOLO. OLF rotation for artificial gravity must be stopped prior to start of OSAV/CM egress attempt and may be restarted following completion of these operations.

EXP. NO. CT/ZG-103

4. OPERATIONAL PROCEDURE:

The OSAV modules are stored in the OLF hangar and then the hangar bay pump-down is started. When hangar pump-down is completed, the hangar hatch is opened and the handling mechanism is swung in through the hatch and attached to the OSAV/CM. Using the handling mechanism the OSAV/CM is swung out of the hangar and docked in the Apollo logistics vehicle docking port adjacent to the hangar hatch. The handling mechanism is then returned to its stored position, the OLF hangar hatch is closed, and the hangar bay is repressurized.

ORBIT REQUIREMENTS: Any

EXPERIMENT MASS (KILOGRAMS) 1,200 (2,643 lbs.)

EXPERIMENT VOLUME (METERS^3) 5.6 (198 FT^3)

EXPERIMENT POWER (WATTS) 2,000

EXPERIMENT DURATION (DAYS) .27/operation

NUMBER OF TIMES/FLIGHT: 10

EXPERIMENT MAN-HOURS/DAY: Not applicable

TOTAL EXPERIMENT MAN-HOURS: 15

5. EXPERIMENT SKETCH: Not applicable

DESCRIPTION - AOLO EXPERIMENT FOR OLF

EXP. NO. D/AG-100

1. EXPERIMENT CATEGORY: Docking/Artificial Gravity

1.1 EXPERIMENT TITLE: Docking of Complete OSAV to OL F - Rotating OLF

2. JUSTIFICATION:

a. This experiment is needed to develop and verify the OSAV operational concept.

b. This experiment is needed in orbit in that Earth simulations are too costly and would not provide all the necessary conditions.

c. This experiment as presented provides the only presently known means of developing and verifying the required procedures.

d. The OLF is the first orbiting vehicle providing the space necessary for evaluating the OSAV and the evaluation is required prior to AOLO.

e. If OLF rotation for artificial gravity is used, the stopping and starting of its rotation each time that the OSAV must be docked, may prove to be too costly in OLF propellants in comparison with the added propellant cost for the OSAV required if the OSAV is docked while the OLF is rotating, to justify the stopping and starting of the OLF rotation for these operations.

3. SUMMARY DESCRIPTION:

The complete OSAV consists of two modules, the OSAV/PM with the OSAV/CM attached to its outer surface so that the OSAV/CM pilot can see the OSAV/PM airlock and can provide the necessary control to the combined vehicle. The procedures for docking the OSAV, as developed by Earth studies, must be verified and crews must be trained to use the vehicle prior to AOLO. The two modules must be docked in such a manner that the personnel in each module may evacuate from the modules into the OLF.

EXP. NO. D/AG-100

4. OPERATIONAL PROCEDURE:

The OSAV, consisting of the OSAV/PM and OSAV/CM, is docked to the OLF at the docking port provided for the Apollo logistics vehicle, which is located adjacent to the OLF hangar hatch and using the OSAV/PM airlock as the docking connection. The OSAV/CM is then separated from the OSAV/PM and individually docked at the opposite Apollo logistics vehicle docking port.

ORBIT REQUIREMENTS: Any OSAV to start docking maneuver from a point not greater than 3.7 km (2 n.mi.) from OLF.

EXPERIMENT MASS (KILOGRAMS): 6,300 #13,873 lbs.)

EXPERIMENT VOLUME (METERS^3): 40.6 (1,434 ft^3)

EXPERIMENT POWER (WATTS): 0

EXPERIMENT DURATION (DAYS): Not applicable

NUMBER OF TIMES/FLIGHT: 10

EXPERIMENT MAN-HOURS/DAY: Not applicable

TOTAL EXPERIMENT MAN-HOURS: 10

5. EXPERIMENT SKETCH: Not applicable

DESCRIPTION - AOLO EXPERIMENT FOR OLF

EXP. NO. D/AG-101

1. EXPERIMENT CATEGORY: Docking/Artificial Gravity

1.1 EXPERIMENT TITLE: Separation of Complete OSAV from OLF - Rotating OLF

2. JUSTIFICATION:

a. This experiment is needed to develop and verify the OSAV operational concept.

b. This experiment is needed in orbit in that Earth simulations are too costly and would not provide all the necessary conditions.

c. This experiment as presented provides the only presently known means of developing and verifying the required procedures.

d. The OLF is the first orbiting vehicle providing the space necessary for evaluating the OSAV and the evaluation is required prior to AOLO.

e. If OLF rotation for artificial gravity is used, the stopping and starting of its rotation each time that the OSAV must be docked, may prove to be too costly in OLF propellants in comparison with the added propellant cost for the OSAV required if the OSAV is docked while the OLF is rotating, to justify the stopping and starting of the OLF rotation for these operations.

3. SUMMARY DESCRIPTION:

The complete OSAV consists of two modules, the OSAV/CM and the OSAV/PM. In the docked position the OSAV/PM is docked to the OLF at the docking port provided for the Apollo logistics vehicle and located adjacent to the hangar hatch, while the OSAV/CM is docked at the opposite Apollo logistics vehicle dock. Procedures for manning, joining, and launch of these modules, as developed by Earth studies, must be verified and crews trained to use the vehicle prior to AOLO.

4. OPERATIONAL PROCEDURE:

With the modules docked to the OLF, as noted in Paragraph 3, the two-man crew for the OSAV/CM may enter their vehicle from the OLF and the cargo and passengers may be loaded into the OSAV/PM under shirtsleeve conditions. When the modules are loaded, the OSAV/CM leaves its dock and is maneuvered into position and attached to the OSAV/PM. The OSAV/CM pilot can now control the complete vehicle which at this time is released from the docking port and maneuvered away from the OLF.

ORBIT REQUIREMENTS: Any (OSAV to complete separation maneuvers at a distance not greater than 3.7 km (2 n.mi.) from the OLF.)

EXPERIMENT MASS (KILOGRAMS): 6,300 (13,873 lbs.)

EXPERIMENT VOLUME (METERS^3): 40.6 (1,434 ft^3)

EXPERIMENT POWER (WATTS): 0

EXPERIMENT DURATION (DAYS): Not applicable

NUMBER OF TIMES/FLIGHT: 10

EXPERIMENT MAN-HOURS/DAY: Not applicable

TOTAL EXPERIMENT MAN-HOURS: 10

5. EXPERIMENT SKETCH: Not applicable

DESCRIPTION - AOLO EXPERIMENT FOR OLF

EXP. NO. D/AG-102

1. EXPERIMENT CATEGORY: Docking/Artificial Gravity

1.1 EXPERIMENT TITLE: Docking of OSAV/CM to OLF - Rotating OLF

2. JUSTIFICATION:

a. This experiment is needed to develop and verify the OSAV operational concept.

b. This experiment is needed in orbit in that Earth simulations are too costly and would not provide all the necessary conditions.

c. This experiment as presented provides the only presently known means of developing and verifying the required procedures.

d. The OLF is the first orbiting vehicle providing the space necessary for evaluating the OSAV and the evaluation is required prior to AOLO.

e. If OLF rotation for artificial gravity is used, the stopping and starting of its rotation each time that the OSAV must be docked, may prove to be too costly in OLF propellants in comparison with the added propellant cost for the OSAV required if the OSAV is docked while the OLF is rotating, to justify the stopping and starting of the OLF rotation for these operations.

3. SUMMARY DESCRIPTION:

The OSAV consists of two modules, the OSAV/PM and the OSAV/CM, and under the present concept, these modules may be used either in combination or the OSAV/CM by itself. The docking procedures for docking the OSAV/CM as developed by Earth studies, must be verified and crews trained to use the module prior to AOLO. The OSAV/CM must be docked to the OLF in such a manner that the crew may evacuate from the module into the OLF.

EXP. NO. D/AG-102

4. OPERATIONAL PROCEDURE:

The OSAV/CM, piloted by its two-man crew, must rendezvous and dock with the OLF. The docking is to be performed at the OLF docking port provided for the Apollo logistics vehicle, which is located adjacent to the OLF hangar hatch.

ORBIT REQUIREMENTS: Any (OSAV/CM to start rendezvous and docking maneuvers from a point not greater than 3.7 km (2 n.mi.) from OLF.)

EXPERIMENT MASS (KILOGRAMS): 1,300 (2,863 lbs.)

EXPERIMENT VOLUME (METERS^3): 5.1 (180 ft^3)

EXPERIMENT POWER (WATTS): 0

EXPERIMENT DURATION (DAYS): Not applicable

NUMBER OF TIMES/FLIGHT: 10

EXPERIMENT MAN-HOURS/DAY: Not applicable

TOTAL EXPERIMENT MAN-HOURS: 10

5. EXPERIMENT SKETCH: Not applicable

DESCRIPTION - AOLO EXPERIMENT FOR OLF

EXP. NO. D/AG-103

1. EXPERIMENT CATEGORY: Docking/Artificial Gravity

1.1 EXPERIMENT TITLE: Separation of OSAV/CM from OLF - Rotating OLF

2. JUSTIFICATION:

a. This experiment is needed to develop and verify the OSAV operational concept.

b. This experiment is needed in orbit in that Earth simulations are too costly and would not provide all the necessary conditions.

c. This experiment as presented provides the only presently known means of developing and verifying the required procedures.

d. The OLF is the first orbiting vehicle providing the space necessary for evaluating the OSAV and the evaluation is required prior to AOLO.

e. If OLF rotation for artificial gravity is used, the stopping and starting of its rotation each time that the OSAV must be docked, may prove to be too costly in OLF propellants in comparison with the added propellant cost for the OSAV required if the OSAV is docked while the OLF is rotating, to justify the stopping and starting of the OLF rotation for these operations.

3. SUMMARY DESCRIPTION:

The OSAV consists of two modules, the OSAV/PM and the OSAV/CM, and under the present concept these modules may be used either in combination or the OSAV/CM by itself. The procedures for separating the OSAV/CM from its dock at the OLF, as developed by Earth studies, must be verified and crews trained to use the module prior to AOLO. The OSAV/CM must be docked to the OLF, so that its crew can board it from the OLF, then separates to perform its mission.

EXP. NO. D/AG-103

4. OPERATIONAL PROCEDURE:

The OSAV/CM is docked to the OLF docking port provided for the Apollo logistics vehicle and located adjacent to the OLF hangar hatch. In this configuration the OSAV/CM two-man crew may enter the vehicle under shirt-sleeve conditions. Once the crew is aboard the OSAV/CM, it may be separated from the dock and be maneuvered away from the OLF.

ORBIT REQUIREMENTS: Any (OSAV/CM to complete separation maneuvers at a distance not greater than 3.7 km (2 n.mi.) from the OLF.)

EXPERIMENT MASS (KILOGRAMS): 1,300 (2,863 lbs.)

EXPERIMENT VOLUME (METERS^3): 5.1 (180 ft^3)

EXPERIMENT POWER (WATTS): 0

EXPERIMENT DURATION (DAYS): Not applicable

NUMBER OF TIMES/FLIGHT: 10

EXPERIMENT MAN-HOURS/DAY: Not applicable

TOTAL EXPERIMENT MAN-HOURS: 10

5. EXPERIMENT SKETCH: Not applicable

DESCRIPTION - AOLO EXPERIMENT FOR OLF

EXP. NO. CT/AG-100

1. EXPERIMENT CATEGORY: Cargo Transfer/Artificial Gravity

1.1 EXPERIMENT TITLE: OSAV/PM and OSAV/CM Ingress from Docking Ports to OLF Hangar -- Rotating OLF

2. JUSTIFICATION:

a. This experiment is needed to develop and verify the OSAV operational concept.

b. This experiment is needed in orbit in that Earth simulations are too costly and would not provide all the necessary conditions.

c. This experiment as presented provides the only presently known means of developing and verifying the required procedures.

d. The OLF is the first orbiting vehicle providing the space necessary for evaluating the OSAV and the evaluation is required prior to AOLO.

e. If OLF rotation for artificial gravity is used, the stopping and starting of its rotation each time that the OSAV must be moved into or out of the OLF hangar may prove to be too costly in OLF propellants in comparison to the added handling mechanism power requirements needed if OSAV moments are performed, while the OLF is rotating, to justify the stopping and starting of the OLF rotation for the operations.

3. SUMMARY DESCRIPTION:

The OSAV consists of two modules, the OSAV/PM and OSAV/CM, and when docked to the OLF, the OSAV/PM is docked at the Apollo logistics vehicle docking port adjacent to the OLF hangar hatch, while the OSAV/CM is docked to the opposite Apollo logistics vehicle docking port. When the OSAV is not in use or when maintenance is required, the modules are moved into the OLF hangar. The handling equipment and procedures required to move these modules from the docking ports into thehangar, as developed by Earth studies, must be verified and crews must be trained in their use prior to AOLO.

EXP. NO. CT/AG-100

4. OPERATIONAL PROCEDURE:

The OSAV modules are docked as noted in Paragraph 3 and the OLF hangar bay pump-down is started. When hangar pump-down is complete, the hangar hatch is opened and the handling mechanism is attached to the OSAV/PM. The handling mechanism now removes the OSAV/PM from the dock and swings it to the docking port by the hangar hatch, then evacuates the module. The handling mechanism is swung out of the hangar and is attached to the OSAV/CM. The handling mechanism now removes the OSAV/CM from the dock and moves it into the OLF hangar. The handling mechanism must next be stowed, the OLF hangar hatch closed, and the hangar bay is repressurized.

ORBIT REQUIREMENTS: Any

EXPERIMENT MASS (KILOGRAMS): 5,000 (11,010 lbs.)

EXPERIMENT VOLUME (METERS^3): 41.1 (1,451 FT^3)

EXPERIMENT POWER (WATTS): 2,000

EXPERIMENT DURATION (DAYS): .27/operation

NUMBER OF TIMES/FLIGHT: 10

EXPERIMENT MAN-HOURS/DAY: Not applicable

TOTAL EXPERIMENT MAN-HOURS: 15

5. EXPERIMENT SKETCH: Not applicable

DESCRIPTION - AOLO EXPERIMENT FOR OLF

EXP. NO. CT/AG-101

1. EXPERIMENT CATEGORY: Cargo Transfer/Artificial Gravity

1.1 EXPERIMENT TITLE: OSAV/CM and OSAV/PM Egress from OLF Hangar to Docking Ports - Rotating OLF

2. JUSTIFICATION:

a. This experiment is needed to develop and verify the OSAV operational concept.

b. This experiment is needed in orbit in that Earth simulations are too costly and would not provide all the necessary conditions.

c. This experiment as presented provides the only presently known means of developing and verifying the required procedures.

d. The OLF is the first orbiting vehicle providing the space necessary for evaluating the OSAV and the evaluation is required prior to AOLO.

e. If OLF rotation for artificial gravity is used, the stopping and starting of its rotation each time that the OSAV must be moved into or out of the OLF hangar may prove to be too costly in OLF propellants in comparison to the added handling mechanism power requirements needed if OSAV moments are performed, while the OLF is rotating, to justify the stopping and starting of the OLF rotation for the operations.

3. SUMMARY DESCRIPTION:

The OSAV consists of two modules, the OSAV/PM and OSAV/CM, which are stored in the OLF hangar when not in use or when maintenance of the modules is required. When these modules are required for AOLO they must be moved out of the hangar to the Apollo logistic vehicle docking ports for loading and manning. The OSAV/PM uses the docking port adjacent to the hangar hatch, while the OSAV/CM is docked at the opposite docking port. The handling mechanism required to move the modules from the hangar out through the hangar hatch to the docking port and the procedures needed to operate this mechanism, as developed by Earth studies, must be verified and crews must be trained in their use prior to AOLO.

4. OPERATIONAL PROCEDURE:

The OSAV modules are stored in the OLF hangar and hangar bay pump-down is started. When hangar pump-down is completed, the hangar hatch is opened and the handling mechanism is swung in through the hatch and attached to the OSAV/CM. Using the handling mechanism the OSAV/CM is swung out of the hangar to the Apollo logistics vehicle docking port adjacent to the hangar hatch. The OSAV/CM crew board their module and move it to the opposite dock. The handling mechanism is swung back into the hangar and attached to the OSAV/PM, which is then swung out to the docking port adjacent to the hatch. The handling mechanism is then stored, the OLF hangar hatch is closed and hangar bay is repressurized.

ORBIT REQUIREMENTS: Any

EXPERIMENT MASS (KILOGRAMS): 5,000 (11,010 lbs.)

EXPERIMENT VOLUME (METERS^3): 41.1 (1,451 FT^3)

EXPERIMENT POWER (WATTS): 2,000

EXPERIMENT DURATION (DAYS): .27/operation

NUMBER OF TIMES/FLIGHT: 10

EXPERIMENT MAN-HOURS/DAY: Not applicable

TOTAL EXPERIMENT MAN-HOURS: 15

5. EXPERIMENT SKETCH: Not applicable

DESCRIPTION - AOLO EXPERIMENT FOR OLF

EXP. NO. CT/AG-102

1. EXPERIMENT CATEGORY: Cargo Transfer/Artificial Gravity

1.1 EXPERIMENT TITLE: OSAV/CM Ingress to OLF Hangar from Docking Port - Rotating OLF

2. JUSTIFICATION:

a. This experiment is needed to develop and verify the OSAV operational concept.

b. This experiment is needed in orbit in that Earth simulations are too costly and would not provide all the necessary conditions.

c. This experiment as presented provides the only presently known means of developing and verifying the required procedures.

d. The OLF is the first orbiting vehicle providing the space necessary for evaluating the OSAV and the evaluation is required prior to AOLO.

e. If OLF rotation for artificial gravity is used, the stopping and starting of its rotation each time that the OSAV must be moved into or out of the OLF hangar may prove to be too costly in OLF propellants in comparison to the added handling mechanism power requirements needed if OSAV moments are performed, while the OLF is rotating, to justify the stopping and starting of the OLF rotation for the operations.

3. SUMMARY DESCRIPTION:

The OSAV consists of two modules, the OSAV/CM and the OSAV/PM, which either may be used in combination or the OSAV/CM may be used by itself. When only the OSAV/CM is used, the OSAV/PM will be stored in the OLF hangar; this allows the OSAV/CM to be docked at the Apollo logistics vehicle docking port adjacent to the OLF hangar hatch. When the OSAV/CM is not in use or needs maintenance, it must be moved from the docking port into the hangar. The handling mechanism required to move the OSAV/CM from the docking port through the hangar door and into the hangar, and the procedures needed to operate this mechanism, as developed by Earth studies, must be verified and crews must be trained in their use prior to AOLO.

4. OPERATIONAL PROCEDURE:

The OSAV/CM is docked to the OLF at the Apollo logistics vehicle docking port adjacent to the hangar hatch and then the pump-down of the hangar bay is started. When hangar pump-down is completed, the hangar hatch is opened and the handling mechanism is extended and attached to the OSAV/CM. Using the handling mechanism, the OSAV/CM is removed from the docking port and swung through the hangar hatch into the hangar. The handling mechanism is then returned to its stowed position, the hangar hatch is closed, then the hangar bay is repressurized.

ORBIT REQUIREMENTS: Any

EXPERIMENT MASS (KILOGRAMS): 1,200 (2,643 lbs)

EXPERIMENT VOLUME (METERS^3): 5.6 (198 ft^3)

EXPERIMENT POWER (WATTS): 2,000

EXPERIMENT DURATION (DAYS): .27/operation

NUMBER OF TIMES/FLIGHT: 10

EXPERIMENT MAN-HOURS/DAY: Not applicable

TOTAL EXPERIMENT MAN-HOURS: 15

5. EXPERIMENT SKETCH: Not applicable

DESCRIPTION - AOLO EXPERIMENT FOR OLF

EXP. NO. CT/AG-103

1. EXPERIMENT CATEGORY: Cargo Transfer/Artificial Gravity

1.1 EXPERIMENT TITLE: OSAV/CM Egress from OLF Hangar to Docking Port - Rotating OLF

2. JUSTIFICATION:

a. This experiment is needed to develop and verify the OSAV operational concept.

b. This experiment is needed in orbit in that Earth simulations are too costly and would not provide all the necessary conditions.

c. This experiment as presented provides the only presently known means of developing and verifying the required procedures.

d. The OLF is the first orbiting vehicle providing the space necessary for evaluating the OSAV and the evaluation is required prior to AOLO.

e. If OLF rotation for artificial gravity is used, the stopping and starting of its rotation each time that the OSAV must be moved into or out of the OLF hangar may prove to be too costly in OLF propellants in comparison to the added handling mechanism power requirements needed if OSAV moments are performed, while the OLF is rotating, to justify the stopping and starting of the OLF rotation for the operations.

3. SUMMARY DESCRIPTION:

The OSAV consists of two modules, the OSAV/CM and the OSAV/PM, which either may be used in combination or the OSAV/CM may be used by itself. Both modules are stored in the OLF hangar and when the OSAV/CM is to be used by itself, it must be moved out of the hangar to the Apollo logistic vehicle docking port adjacent to the hangar hatch for manned and launch. The handling mechanism required to move the OSAV/CM from the hangar out through the hangar hatch to the docking port and the procedures needed to operate this mechanism, as developed by Earth studies, must be verified and crews must be trained in their use prior to AOLO.

EXP. NO. CT/AG-103

4. OPERATIONAL PROCEDURE:

The OSAV modules are stored in the OLF hangar and then the hangar bay pump-down is started. When hangar pump-down is completed, the hangar hatch is opened and the handling mechanism is swung in through the hatch and attached to the OSAV/CM. Using the handling mechanism the OSAV/CM is swung out of the hangar and docked in the Apollo logistics vehicle docking port adjacent to the hangar hatch. The handling mechanism is then returned to its stored position, the OLF hangar hatch is closed, and the hangar bay is repressurized.

ORBIT REQUIREMENTS: Any

EXPERIMENT MASS (KILOGRAMS): 1,200 (2,643 lbs.)

EXPERIMENT VOLUME (METERS^3): 5.6 (198 ft^3)

EXPERIMENT POWER (WATTS): 2,000

EXPERIMENT DURATION (DAYS): .27/operation

NUMBER OF TIMES/FLIGHT: 10

EXPERIMENT MAN-HOURS/DAY: Not applicable

TOTAL EXPERIMENT MAN-HOURS: 15

5. EXPERIMENT SKETCH: Not applicable

DESCRIPTION - AOLO EXPERIMENT FOR OLF

EXP. NO. CT/SE-100

1. EXPERIMENT CATEGORY: Cargo Transfer/Space Environment

1.1 EXPERIMENT TITLE: Cargo Transfer -- Small Containers Using OSAV/CM

2. JUSTIFICATION:

a. This experiment is needed to develop and verify the OSAV operational concept.

b. This experiment is needed in orbit in that Earth simulations are too costly and would not provide all the necessary conditions.

c. This experiment as presented provides the only presently known means of developing and verifying the required procedure.

d. The OLF is the first orbiting vehicle providing the space necessary for evaluating the OSAV and the evaluation is required prior to AOLO.

3. SUMMARY DESCRIPTION:

The OSAV consists of two modules, the OSAV/PM and the OSAV/CM, and these are planned to be operated in combination or the OSAV/CM can be used by itself. A number of space activities are planned for using the OSAV/CM as an independent vehicle and the subject of this experiment is planned to verify the procedures, as developed by Earth studies, for performing one of these activities, and to train crews to perform this activity prior to AOLO. The activity considered for this experiment is the transfer of small items of cargo up to 100 kg (220 lbs) and up to 0.7 meter^3 (24.7 ft^3) either from the OLF to the OLV or from the OLV to the OLF, when these vehicles are separated by a distance not exceeding 371. km (20 n.mi.).

EXP. NO. CT/SE-100

4. OPERATIONAL PROCEDURE:

The OSAV/CM with its 2-man crew, starts from an Apollo logistics vehicle docking port at the OLF, moves to a point on the OLF skin near the OLF hub air lock. The cargo container is moved into the OLF hub air lock from inside the OLF and the inner air lock hatch is closed. The outer air lock hatch is opened and the OSAV/CM manipulator arms operator direct the arms into the air lock and pick up and extract the cargo container, the outer air lock hatch is then closed, and the OSAV/CM with the cargo container is launched and travels away from the OLF. At a distance of not greater than 18.5 km (10 n.mi.), the OSAV/CM is turned around and returns to the OLF and is again attached near the OLF hub air lock. The outer air lock hatch is opened and the OSAV/CM manipulator arm operator directs the arm to move the cargo container into the airlock, release the container, and move themselves clear of the airlock. The outer air lock hatch is now closed and the OSAV/CM returns to the Apollo logistics vehicle docking port. The inner air lock hatch is now opened and the cargo container is returned to the OLF interior. This procedure must be repeated for each of the following cargo containers:

10 kg - 0.05 meter^3
10 kg - 0.6 meter ^{3}
80 kg - 0.05 meter^3
100 kg - 0.7 meter^3

ORBIT REQUIREMENTS: Any

EXPERIMENT MASS (KILOGRAMS): 1,500 (3,303 lbs)

EXPERIMENT VOLUME (METERS^3): 7.0 (247 ft^3)

EXPERIMENT POWER (WATTS): 2,000

EXPERIMENT DURATION (DAYS): 2

NUMBER OF TIMES/FLIGHT: 4

EXPERIMENT MAN-HOURS/DAY: 50

TOTAL EXPERIMENT MAN-HOURS: 100

5. EXPERIMENT SKETCH: Not applicable

DESCRIPTION - AOLO EXPERIMENT FOR OLF

EXP. NO. CT/SE-101

1. EXPERIMENT CATEGORY: Cargo Transfer/Space Environment

1.1 EXPERIMENT TITLE: Cargo Transfer - Large Containers Using OSAV/CM

2. JUSTIFICATION:

a. This experiment is needed to develop and verify the OSAV operational concept.

b. This experiment is needed in orbit in that Earth simulations are too costly and would not provide all the necessary conditions.

c. This experiment as presented provides the only presently known means of developing and verifying the required procedures.

d. The OLF is the first orbiting vehicle providing the space necessary for evaluating the OSAV and the evaluation is required prior to AOLO.

e. If the OSAV/CM development is complete in time to have the module at the OLF prior to the first OLO, then this experiment may be accomplished during that launch operations; if the OSAV/CM development is not completed by the time of the first OLO, then an additional vehicle with the size and mass of the Saturn S-II stage, loaded with LH fuel and with a propulsion system equivalent to the S-II Trans-stage would be necessary to perform this experiment. This experiment must be followed by experiment EA-100.

3. SUMMARY DESCRIPTION:

The OSAV consists of two modules, the OSAV/PM and the OSAV/CM, and these modules are planned to be used either in combination or the OSAV/CM by itself. A number of AOLO space activities are planned to be performed by the OSAV/CM operating as an independent vehicle and the subject of this experiment is planned to verify the procedures, as developed by Earth studies, for performing one of these activities; and to train crews to perform this activity prior to AOLO. The activity considered for this experiment is the rendezvous of the OSAV/CM with a large vehicle at a distance of not greater than 37.1 km (20 n.mi.) from the OLF, Then, after the OSAV/CM is attached to the outer surface of this vehicle, it would control the vehicle by controlling the vehicle's propulsion system and guide this vehicle to a desired target.

4. OPERATIONAL PROCEDURE:

The OSAV/CM with its two-man crew starts from an Apollo logistics vehicle docking port on the OLF, from which it is launched. The OSAV/CM then rendezvous with the Saturn S-II stage, which has been launched to be used as a propulsion stage of the OLV. After rendezvous the OSAV/CM is attached to the side of the S-II stage and controls its transtage to guide the S-II stage into docking position with the OLV.

ORBIT REQUIREMENTS: Any

EXPERIMENT MASS (KILOGRAMS): 121,000 (266,442 lbs.)

EXPERIMENT VOLUME (METERS^3): Not available

EXPERIMENT POWER (WATTS): 0

EXPERIMENT DURATION (DAYS): 2 days

NUMBER OF TIMES/FLIGHT: 1

EXPERIMENT MAN-HOURS/DAY: 48

TOTAL EXPERIMENT MAN-HOURS: 96

5. EXPERIMENT SKETCH: Not applicable.

DESCRIPTION - AOLO EXPERIMENT FOR OLF

EXP. NO. CT/SE-102

1. EXPERIMENT CATEGORY: Cargo Transfer/Space Environment

1.1 EXPERIMENT TITLE: Cargo Transfer - Personnel and Equipment Using Complete OSAV

2. JUSTIFICATION:

a. This experiment is needed to develop and verify the OSAV operational concept.

b. This experiment is needed in orbit in that Earth simulations are too costly and would not provide all the necessary conditions.

c. This experiment as presented provides the only presently known means of developing and verifying the required procedures.

d. The OLF is the first orbiting vehicle providing the space necessary for evaluating the OSAV and the evaluation is required prior to AOLO.

3. SUMMARY DESCRIPTION:

The OSAV consists of two modules, the OSAV/PM and the OSAV/CM, and the modules are planned to be used either in combination or the OSAV/CM by itself. The combination or complete OSAV will be used to transport personnel and/or equipment between the OLF and the OLV when these vehicles are in separate orbits, but located at a distance of less than 37.1 km (20 n.mi.). The subject of this experiment is to verify the procedures, as developed by Earth studies, for performing this operation; and to train crews to perform this operation prior to AOLO.

EXP. NO. CT/SE-102

4. OPERATIONAL PROCEDURE:

The OSAV/PM and OSAV/CM are docked at the Apollo logistics vehicle docking ports on the OLF, the OSAV is loaded with supplies and/or personnel with a total mass of 1361 kg (3,000 lbs), and the two-man OSAV/CM crew are in their module. The OSAV/CM moves from its docking port to the OSAV/PM, where it is attached. The combined vehicle is launched and maneuvers away from the OLF. The OSAV travels away from the OLF, a distance not greater than 37.1 km (20 n.mi.), at which point the OSAV will turn around and rendezvous and dock at the OLF at the Apollo logistics vehicle docking port adjacent to the hangar hatch. The OSAV/CM will then separate and dock at the opposite Apollo logistics vehicle docking port.

ORBIT REQUIREMENTS: Any

EXPERIMENT MASS (KILOGRAMS): 6,300 (13,873 lbs)

EXPERIMENT VOLUME (METERS^3): 40.6 (1,434 ft^3)

EXPERIMENT POWER (WATTS): 0

EXPERIMENT DURATION (DAYS): 2 days

NUMBER OF TIMES/FLIGHT: 1

EXPERIMENT MAN-HOURS/DAY: 55

TOTAL EXPERIMENT MAN-HOURS: 110

5. EXPERIMENT SKETCH: Not applicable

DESCRIPTION - AOLO EXPERIMENT FOR OLF

EXP. NO. CT/SE-103

1. EXPERIMENT CATEGORY: Cargo Transfer/Space Environment

1.1 EXPERIMENT TITLE: Satellite Retrieval and Reorbit Using OSAV/CM

2. JUSTIFICATION:

a. This experiment is needed to develop and verify the OSAV operational concept.

b. This experiment is needed in orbit in that Earth simulations are too costly and would not provide all the necessary conditions.

c. This experiment as presented provides the only presently known means of developing and verifying the required procedures.

d. The OLF is the first orbiting vehicle providing the space necessary for evaluating the OSAV and the evaluation is required prior to AOLO.

3. SUMMARY DESCRIPTION:

The OSAV consists of two modules, the OSAV/PM and the OSAV/CM, and these modules are planned to be used either in combination or the OSAV/CM by itself. A number of AOLO space activities are planned to be performed by the OSAV/CM operating as an independent vehicle. The subject of this experiment is planned to verify the procedures, as developed by Earth studies, for performing one of the activities; and to train crews to perform this activity prior to AOLO. The activity considered by this experiment is the using of the OSAV/CM to capture and transport a near orbiting satellite to the OLF for repair and then following completion of the necessary repairs, the OSAV/CM would return the satellite to its proper orbit.

EXP. NO. CT/SE-103

4. OPERATIONAL PROCEDURE:

The OSAV/CM is launched from the OLF docking port after OLF tracking radar has located the target satellite and by RF communications with the OSAV/CM guide the module to a point where the module crew make visual contact with the satellite. The OSAV/CM then makes visual rendezvous with the satellite and captures it with the manipulator arms. The OSAV/CM then returns to the OLF and docks on the OLF exterior near the hub air lock. The outer air lock hatch is then opened, and the manipulator arms are controlled to place the satellite inside the air lock, release the satellite, and move themselves clear of the air lock. The outer air lock hatch is closed and the OSAV/CM returns to the docking port, and the satellite is removed from the airlock through the inner air lock hatch. After necessary repairs to the satellite are completed, it is returned to the air lock, the OSAV/CM moves to the air lock and removes the satellite through the outer air lock hatch. The OSAV/CM returns to the satellite orbit under RF direction from the OLF, and when proper orbit position and velocity are obtained, the OSAV/CM on command from the OLF will release the satellite, then the OSAV/CM will return and dock at the OLF docking port.

ORBIT REQUIREMENTS: Any (OLF and satellite must be with 111.3 km (60 n.mi.) of each other.)

EXPERIMENT MASS (KILOGRAMS): 1,500 (3,303 lbs.)

EXPERIMENT VOLUME (METERS^3): 7.0 (247 ft^3)

EXPERIMENT POWER (WATTS): 2,000

EXPERIMENT DURATION (DAYS): 4

NUMBER OF TIMES/FLIGHT: 1

EXPERIMENT MAN-HOURS/DAY: 48

TOTAL EXPERIMENT MAN-HOURS: 192

5. EXPERIMENT SKETCH: Not applicable

DESCRIPTION - AOLO EXPERIMENT FOR OLF

EXP. NO. EA-100

1. EXPERIMENT CATEGORY: Erection and Assembly

1.1 EXPERIMENT TITLE: Alignment and Assembly of OLV using OSAV/CM as a Space Tug

2. JUSTIFICATION:

a. This experiment is needed to develop and verify the OSAV operational concept.

b. This experiment is needed in orbit in that Earth simulations are too costly and would not provide all the necessary conditions.

c. This experiment as presented provides the only presently known means of developing and verifying the required procedures.

d. The OLF is the first orbiting vehicle providing the space necessary for evaluating the OSAV and the evaluation is required prior to AOLO.

e. This experiment is the completion of the task started by experiment CT/SE-101 and must be performed immediately following that operation.

3. SUMMARY DESCRIPTION:

The OSAV consists of two modules, the OSAV/PM and the OSAV/CM, and these modules are planned to be used either in combination or the OSAV/CM by itself. A number of AOLO space activities are planned to be performed by the OSAV/CM operating as an independent vehicle. The subject of this experiment is planned to verify the procedures, as developed by Earth studies, for performing one of these activities; and to train crews to perform this activity prior to AOLO. The activity considered for this experiment is the alignment, docking, and final attachment of the Saturn S-II stage with the OLV. The OSAV/CM would have command of the S-II stage propulsion and guidance system and would guide this vehicle into proper alignment for docking and then move the vehicle into the OLV docking mechanism.

4. OPERATIONAL PROCEDURE:

The OSAV/CM is attached to the Saturn S-II stage and has guided this vehicle to within a close proximity of the OLV under the procedure shown in experiment CT/SE-101. The OSAV/CM, by controlling the vehicle propulsion and guidance system, now moves the vehicle into proper alignment and guides it into the OLV docking mechanism. Once the S-II is docked, the OSAV/CM separates from the vehicle, moves into a position where its manipulator arms can be controlled to make the necessary attachments between the S-II stage and the OLV, then the OSAV/CM returns to its OLF docking port.

ORBIT REQUIREMENTS: Any

EXPERIMENT MASS (KILOGRAMS): 234,000 (515,268 lbs.)

EXPERIMENT VOLUME (METERS^3): Not available

EXPERIMENT POWER (WATTS): 0

EXPERIMENT DURATION (DAYS): 2

NUMBER OF TIMES/FLIGHT: 1

EXPERIMENT MAN-HOURS/DAY: 48

TOTAL EXPERIMENT MAN-HOURS: 96

5. EXPERIMENT SKETCH: Not applicable

DESCRIPTION - AOLO EXPERIMENT FOR OLF

EXP. NO. MR-100

1. EXPERIMENT CATEGORY: Maintenance and Repair

1.1 EXPERIMENT TITLE: OLV Maintenance and Repair Operations - Using the OSAV/CM

2. JUSTIFICATION:

a. This experiment is needed to develop and verify the OSAV operational concept.

b. This experiment is needed in orbit in that Earth simulations are too costly and would not provide all the necessary conditions.

c. This experiment as presented provides the only presently known means of developing and verifying the required procedures.

d. The OLF is the first orbiting vehicle providing the space necessary for evaluating the OSAV and the evaluation is required prior to AOLO.

3. SUMMARY DESCRIPTION:

The OSAV consists of two modules, the OSAV/PM and the OSAV/CM, and these modules are planned to be used either in combination or the OSAV/CM by itself. A number of AOLO space activities are planned to be performed by the OSAV/CM operating as an independent vehicle. The subject of this experiment is planned to verify the procedures, as developed by Earth studies, for performing one of the activities; and to train crews to perform this activity prior to AOLO. The activity considered by this experiment is the using of the OSAV/CM to perform OLV maintenance and repair functions, which must be accomplished on the exterior of the OLV and which are beyond the ability of personnel in spacesuits to perform.

4. OPERATIONAL PROCEDURE:

A number of large breadboard problems will be setup on the exterior of the OLF. These breadboards will be representative of equipment items, which will be mounted externally on OLVs planned for AOLO. The OSAV/CM will be docked at an Apollo logistics vehicle docking port on the OLF, where it can be manned. After boarding the OSAV/CM, the crew will move the module from the dock and attach it to the base of the breadboard, which will be formed to represent portions of the OLV's skin. Once the OSAV/CM is attached to the breadboard, the manipulator arms operator will control the arms to accomplish the desired task, which will most likely be some form of remove and replace operation. Having completed the breadboard task, the OSAV/CM is returned to its docking port and the crew then enter the OLF.

ORBIT REQUIREMENTS: Any

EXPERIMENT MASS (KILOGRAMS): 1,400 (3,083 lbs.)

EXPERIMENT VOLUME (METERS^3): 6.0 (212 ft^3)

EXPERIMENT POWER (WATTS): 0

EXPERIMENT DURATION (DAYS): 20

NUMBER OF TIMES/FLIGHT: Not applicable

EXPERIMENT MAN-HOURS/DAY: 16

TOTAL EXPERIMENT MAN-HOURS: 320

5. EXPERIMENT SKETCH: Not available

6.2.3 OLF Requirements and Design Effects. - The baseline initial OLF with its experiment and hangar bays, the two Apollo docking ports for logistics vehicles, and the exterior air lock from the elevator terminal bay is more than adequate for all the proposed experimentation that appears reasonable to conduct on the initial OLF, except for four areas -- electrical power requirements, experimental equipment mounting provisions within the experiment bay and Apollo or OSAV module parking equipment for supporting these vehicles within the hangar bay, lack of handling equipment for moving the OSAV modules in and out of the hangar bay, and the provision of a stable platform for those experiments requiring accurate stabilization. Each of these areas will be discussed in the following subparagraphs; with each area being described by its requirements, baseline initial OLF limits, and possible solutions to permit the subject area to meet experimental requirements.

a. Electrical Power Requirements. - As noted in the discussion of electrical power limitations, the present proposed electrical generating subsystem is only capable of supplying enough electrical power on the system output buses to support the normal OLF requirements. The present generator subsystem produces 11 kW; however, losses in the rectifying and converting of this power to the types of current required on the output busses amount to 1.62 kW. This loss results in a total of only 9.38 kW available on the generator subsystem busses, and when this is compared with the normal OLF load of 9.08 kW, the OLV checkout load of 10.48 kW, or the load during hangar or experiment bay pump-down of 12.43 kW, it is obvious that the OLF operational requirements exceed the rated output capacity and possibly exceed even the allowable overload capacity which is approximately 12,0 kW. The estimated peak load for experimentation appears to be approximately 7.5 kW, which when added to the peak OLF load, indicates that under peak load approximately 20.0 kW will be required, and the normal total load is estimated at about 17.5 kW. As a result, the total load appears to be too great to be supplied by three 5.5 kW alternators of the type presently proposed for the OLF and the use of four of these units would only slightly exceed the peak requirements. An investigation of the feasibility of installing four alternators, each with its own reactor, plus one spare reactor, indicates that the amount of design change necessary to relocate other equipment now in the space required would require some additional design effort.

b. Experimental Equipment Mounting Provisions. - The experiment and hangar bays of the baseline initial OLF are each approximately 7.14 meters (23.5 ft.) in diameter by 11.05 meters (36.5 ft.) long. The experiment bay must be provided with suitable attachment points for floors, catwalks, and ladders so that experiment hardware may be installed subsequent to launch. At the launch of the initial OLF, these two large bays contain the MORL modules which are deployed after the OLF is in orbit, thereby making any installation of equipment prior to launch impossible. In the hangar bay it will be necessary to install catwalks, supports for the AMUs, RMUs, Apollo vehicles, and the two OSAV modules, and ladders. These facility items again must be installed after MORL module deployment in orbit, and are required to hold the hangared vehicles steady and to reach them for performing maintenance.

c. Hangar Handling Equipment. - The baseline concept of the initial OLF requires that a mechanism be provided adjacent to the hangar hatch for moving the Apollo logistics vehicle modules from their docking port in the OLF hub, through the hangar hatch, and into their stowage supports within; however, no suitable equivalent mechanism is presently provided in this concept for handling the OSAV modules. The equivalent handling mechanism necessary for the proposed OSAV experimentation would not be greatly different than that now required for the Apollo vehicles, and at this time it appears that by making minor modifications to the Apollo handling mechanism, the single unit may be used for moving all the vehicles which will require access to the OLF hangar.

d. Stable Platform Requirements. - At the present time, the attitude control and stabilization system on the OLF does not provide the capability of maintaining the OLF in a sufficiently stable attitude to perform experiments such as those making use of a space telescope. To modify the present initial OLF system to provide the necessary degree of stabilization would require the addition of more reaction control motors and an increase in propellant storage for the system. The number and size of the added reaction control motor and the added propellants required to provide the OLF with the degree of stabilization needed by this experimental equipment does not appear to be feasible. The telescope presently being considered for use with the MORL is contained in its own module, which does provide the necessary stabilization, and if this module were orbited close to or tethered to the OLF, the OLF could then provide the necessary crew quarters, spares storage, maintenance facilities, and communications facilities required by the experiment module.

Conclusions. - While there are some limitations to the capability of the baseline OLF to support experiments, its tremendous potential must also be considered. It is ideally suited for long-term experiments because of its long life and ability to support humans almost indefinitely. In this regard, the time limit in space for personnel is largely governed by their exposure to radiation, a condition that can be rectified by providing some additional protection in the OLF. There is adequate room in the experiment bay for experimental facilities, and a logistic capability over and above that required to support the OLF proper, of some 3,000 kg (6,600 lbs.) every 90 days. In the event that additional experimental facilities are desired, an experiment module such as a Multipurpose Mission Module (MMM) could be orbited and docked to the OLF. Figure 6.2-2 shows an artist's concept of a docked experiment module. This module can be prepared on Earth for a particular family of experiments and then orbited and docked to the OLF which would serve as a "mother" spacecraft. In the event the OLF could not provide certain support such as power, these requirements could be built into the experiment module. The use of the module is particularly attractive in the zero gravity OLF concept, which does not have an experiment bay, as it permits the use of a smaller OLF without detracting from its capabilities.

In summary, it is evident that an OLF is the most feasible approach to a space experiment program, as it combines a support capability and longevity unmatched by any other proposed orbiting laboratory.

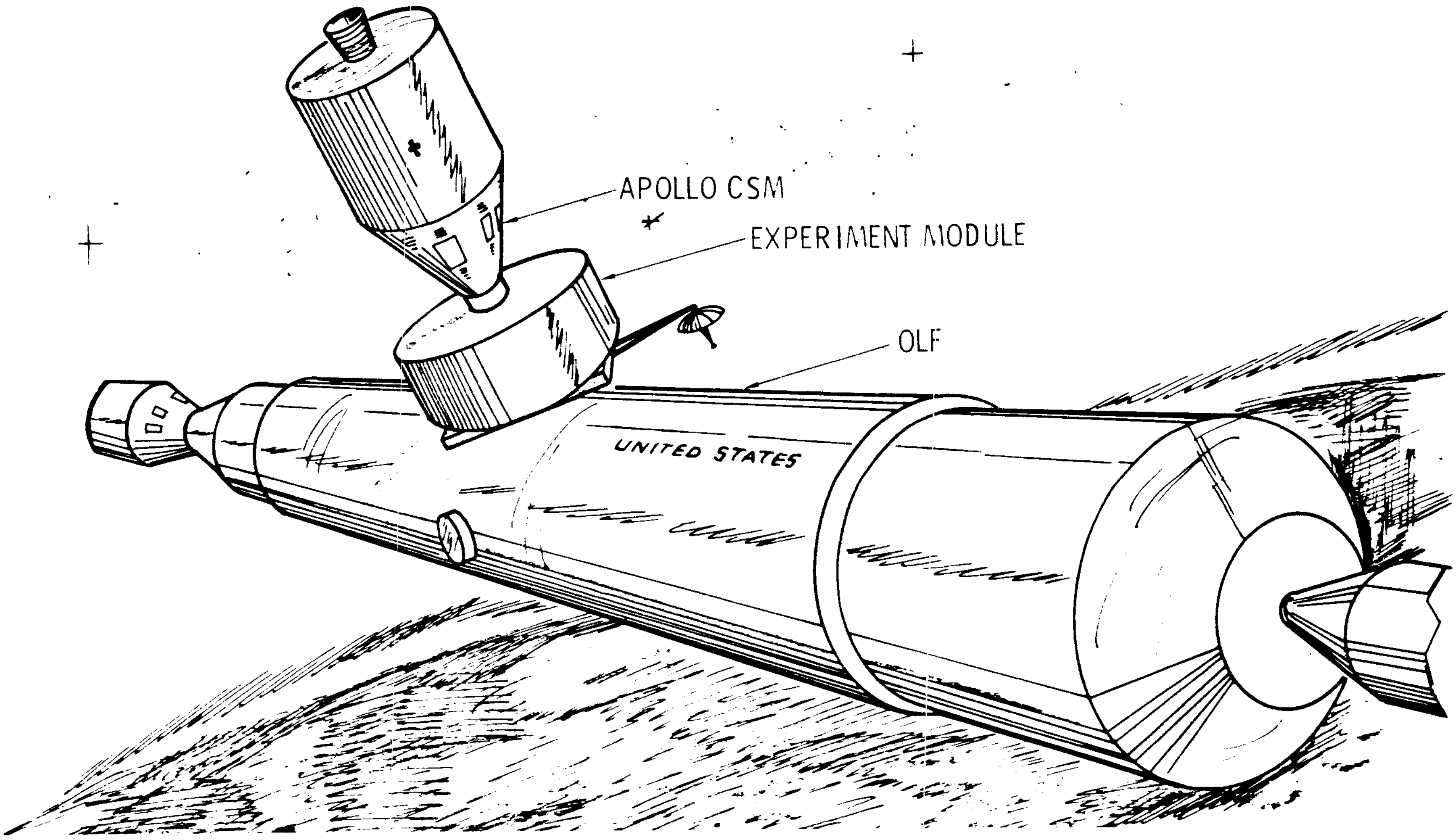

Figure 6.2-2: EXPERIMENT MODULE APPLICATION TO OLF

6.3 DEFINITION OF ORL EXPERIMENTS

An important part of any development plan is the experimental research program. The OLO experimental research program is divided up into four phases. The first two phases represent technology experiments, and include the acquisition of data to establish basic design criteria and data for the evaluation and selection of candidate systems or operational concepts. The next two phases represent operational experiments for verification of operational equipment, techniques, and procedures and for final verification of the integrated systems and operations. The objectives of each phase can be summarized as follows:

Phase I. - Acquire fundamental scientific data upon which basic systems design and operational criteria can be established.

Phase II. - Perform optimization comparisons of typical system and operational concepts to allow evaluation and selection of concepts with reasonable confidence.

Phase III. - Provide validated confidence in the operational systems which have been developed from the selected concepts, and investigate and optimize techniques and procedures for operating, servicing, maintaining, and repairing the proven systems.

Phase IV. - Provide final validation of all systems and operational procedures of the integrated operation prior to the actual mission.

The research required to accomplish these objectives involves both Earth-based and orbital experimentation. High costs and added risks of providing facilities for performing experiments in orbit afford adequate incentive for accomplishing as much of the experimental research, as is physically and economically possible, in Earth-based facilities. However, in many cases the extent of our present capabilities of simulating on Earth the actual environment and circumstances that will be encountered in orbital flight, will not provide the degree of confidence that is desired for such ambitious endeavors. Orbital research programs, such as Mercury and Gemini, have already provided some insight into the feasibility of manned orbital experimentation. Other programs, such as Apollo, AES, MOL, and MORL, which are either in their development or conceptual planning stages, are intended to extend the manned orbital research capability.

The development of an orbital launch capability is typical of other intended space programs in that it too will require significant amounts of both Earth-based and orbital research. A prime objective of advanced missions studies should be the identification of orbital research requirements for the particular mission being studied. This is necessary not only for planning and designing orbital experimentation facilities, but also for justifying their basic need. Therefore, the objective of this part of the OLF study is to identify some of the orbital research necessary for the OLF development and to provide preliminary planning for accomplishing that research.

6.3.1 Experiment Study Approach. - Although the basic investigation of possible ORL experiments received some redirection during the course of the study, the primary objectives were retained and it is believed that the usefulness of the data acquired by this effort was enhanced.

6.3.1.1 Initial Approach to Experiment Studies. - Inasmuch as numerous listings of possible orbital experimentation had evolved from various NASA, Air Force, and industry studies, the initial approach, as outlined in the OLF Study Plan, was first to review those lists of experiments to determine which of those already suggested were applicable to the development of the OLF. Then, as the OLF study progressed, as the OLF design took shape, and as the developmental problems became evident, additional "OLF-peculiar" experimentation would be identified and described. Each experiment would be given a priority with respect to the other OLF developmental experiments and an integrated schedule would be developed.

As the study progressed, it became evident that in the overall orbital launch operations many of the same developmental problems would be encountered in the OLF development, the space checkout and launch equipment development, and the development of other orbital support equipment (OSE), as well as general operating techniques and procedures. A considerable amount of duplication was thereby unavoidable between the three Orbital Launch Operations (OLO) study contractors (Boeing -OLF; LTV-AOLO; Lockheed - SCALE) unless the developmental experiment analysis was closely coordinated. Under the direction of the NASA, an experiment investigation committee was organized, with representatives from each of the associated contractors making up the committee. The initial efforts of the committee were devoted to establishing an integrated approach for studying the OLO developmental experiment requirements. That approach was followed through the remainder of the study, and is described in following paragraphs.

6.3.1.2 Committee Approach to Experiment Investigations - The experiment study plan, as established by the OLO experimentation committee, is illustrated in the flow diagram of Figure 6.3-1. Briefly, the approach used was intended to determine what constituted a basic orbital launch capability, how much of this capability would be achieved within the current planning and studies of Gemini, Apollo, AES and MORL programs, what capability remained to be developed, and how and when this additional developmental experimentation should be accomplished.

Actual deficiencies in current orbital experiment planning, with respect to the development of an initial orbital launch capability, were to be determined through a comparison of the operational capability requirements anticipated for a typical orbital launch or a manned Mars/Venus flyby vehicle, with those capabilities that could be expected to be achieved within the development and orbital experiment programs currently considered for Gemini Apollo, AES, and MORL. Once the experiment deficiencies were identified, typical experiments were to be defined, giving estimates of power, volume, mass, and man-hour requirements. Timing requirements were to be established for each of the experiments, based upon the time that the data was required in its applicable phase of the development plan and upon the development time of the experiment itself. Each experiment was also to be given a priority relative to its basic importance in the total OLO development program. Finally, from consideration of the experimental capabilities of the Gemini, Apollo, AES, and MORL systems, their predicted operational schedules and the experiment development requirements and priorities, an integrated OLO experi-

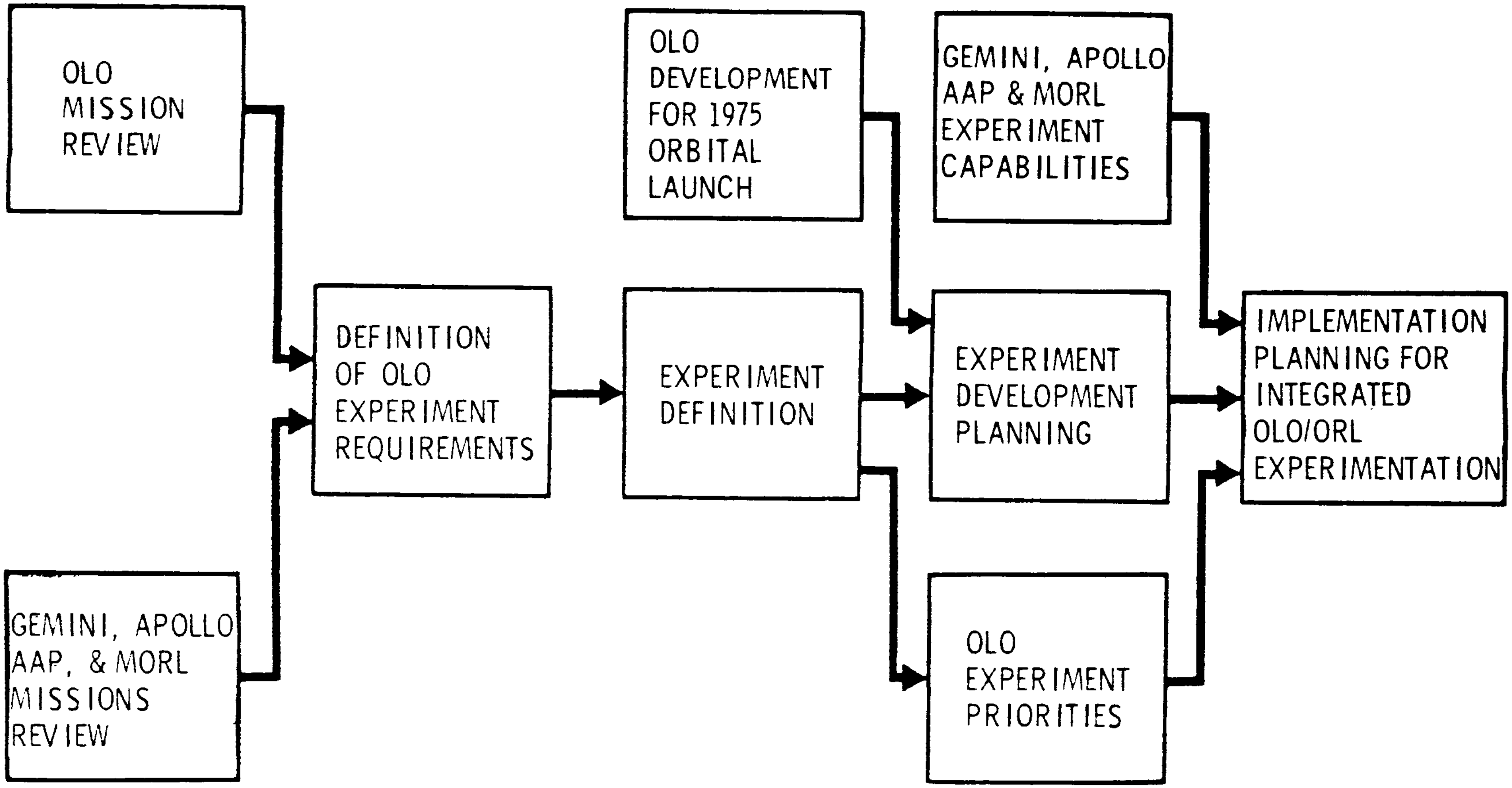

Figure 6.3-1: OLO/ORL EXPERIMENT STUDY APPROACH

ment implementation plan was to be defined.

The division of responsibility between the asociated contractors in the experimentation analyses was to allow maximum utilization of the information and experience being developed in each individual study. Under this delegation of responsibility, Boeing would be responsible for those developmental areas which were of prime concern in the OLF development; Lockheed would be responsible for those areas of most concern in the development of the checkout and launch equipment; and LTV would be responsible for OSE developmental problems, overall orbital launch operations problems, and would integrate the total OLO experiment requirements and implementation plan. Analyses of developmental experiment areas of overlapping interest between the studies would be assigned and mutually agreed upon.

6.3.2 Experiment Study Discussion. - Possible OLO development experiments, which could and/or should be accomplished on-board Orbital Research Laboratories (ORLs), are discussed in the next three sections, ordered chronologically with respect to their accomplishment in the study. The first section discusses primarily the work accomplished through the cooperative efforts of the OLO experimentation committee and is, therefore, concerned with the entire Orbital Launch Operations. The next two sections discuss specifically the experiment analysis work of primary interest to the development of an OLF, which was therefore accomplished by Boeing as part of the OLF study.

6.3.2.1 Identification of OLO Experiment Requirements. - As stated previously, the method used to establish OLO orbital experiment requirements over and above those experiments which are currently being discussed for Gemini, Apollo, AES, and MORL, was to review the actual operational capabilities required to support an orbital launch of a manned vehicle on a Mars/Venus flyby mission and to compare them with the anticipated capabilities evolving from these pre-OLO orbital research programs as currently postulated. Typical operations which could possibly be required to support an orbital launch using the permanent facility mode of operation were first categorized as:

- Orbital Transfer and Rendezvous (OTR)
- Docking (D)
- Personnel Transfer/Artificial Gravity (PT/AG)
- Personnel Transfer/Zero Gravity (PT/ZG)
- Cargo Transfer/Artificial Gravity (CT/AG)
- Cargo Transfer/Zero Gravity (CT/ZG)
- Erection and Assembly (EA)
- Maintenance and Repair (MR)
- Fluid/Propellant Transfer and Storage (F/PTS)
- Checkout (C/O)

Launch (L)

The Gemini, Apollo, AES, and MORL programs, as presently postulated, were then reviewed with respect to these categories to determine the extent of the capability which could be expected to evolve from these programs. Figure 6.3-2 lists planned or suggested experimentation associated with those programs which are applicable to, or closely associated with, the categories of operation required in OLO. These experiments, as listed in the documents referenced on the last page of Figure 6.3-2, were reviewed for applicability to OLO and appropriately assigned. Several experiments appear more than once in the table because of their common relationship to several different possible OLO experiment categories. Reference source entrees in the table are coded to the reference document shown in the last page of the table. Two additional experiment categories are included in the table, "Miscellaneous Design & Operations" and "Personnel Condition", to accommodate listing of experiments which cannot be conveniently located in one of the other categories. From the ensuing review of these experiments and the capabilities of the various systems required to accomplish them, the extent of orbital operations capabilities to evolve from these programs was estimated.

The Gemini program is planned for 12 launches with limited experimental capability. The spacecraft will support two men for up to two weeks with severely limited volume for experimental equipment. Many experiments have already been proposed and approved for the Gemini flights. Some of the basic capabilities to be gained from the Gemini program which will be applicable to OLO are initial evaluation of basic rendezvous and docking (automatic and manual), preliminary extravehicular operations, preliminary evaluation of tracking and control systems, personnel care and behavioral and biomedical monitoring requirements, and orbital abort and reentry maneuvers.

The Apollo program will provide feasibility demonstration and some qualification of equipment and operations required in the Earth launch of the Apollo systems, which are similar to those of the intended OLF logistics spacecraft and of the OLF return vehicles as well. It will provide added refinement in docking operations developed in Gemini and in orbital maneuvering. Navigation and guidance procedures will be proven, and orbital abort and reentry refined. Although the Apollo program is intended to accomplish a lunar landing mission and return the crew to Earth, there will be a measurable extension of actual orbital experience, but not in terms of continuous mission time. The greatest part of the experimentation which has been planned, thus far, for Apollo flights is concerned primarily with personnel care and biomedical studies, which will help to refine the requirements of crew operations in the AES, MORL, and OLF.

The AES and MORL programs could be two significant extensions of orbital experimentation capability. Within current planning, the AES and MORL programs could provide the OLO related capabilities described in Figures 6.3-3 and 6.3-4 respectively. In addition to the categories of operational capability presented in the two tables, it is also assumed that the basic capability of training personnel for performing the orbital operations and for conditioning and maintaining them while they fulfill their functions in orbit, has been developed at least to that level required to accomplish their designated missions. Systems development and materials research necessary to make such operations possible are also assumed to have been accomplished.

FIGURE 6.3-2 - RELATED ORL EXPERIMENTS -- PRESENT PLANNING

EXPERIMENT CATEGORY	REFERENCE SOURCE	EXPM'T. NO.	EXPERIMENT TITLE
ORBITAL TRANSFER AND RENDEZVOUS (OTR)	Gemini	0-9	Simple Navigation (Flts. 4 & 7)
	"	T1	Reentry Communication (Flts. 3 & 12)
	MORL-170	M-2	Identification & Analysis of Spacecraft
	"	M-3	Data Capsule Delivery
	"	M-1	Analysis of Ferry Vehicle Launch from Lab.
	"	J-2	Evaluation of Navigation Techniques
	AES	1407	Advanced Navigation & Guidance
	"	1601	Orbital Maneuvering Docking
	"	1603	Recapture of Syncom III
	MORL-170	13-1	Visual Acquisition of Objects in Space
	"	43	Drag Cone Escape
	"	44	Data Delivery-Controlled Terminal Guidance
	"	45	Data Delivery - Autonomous Terminal Guidance
	"	65 thru 67, 69 & 117	Manual Navigation Techniques
	"	71	Assess Handling of Navigational Data
Docking (D)	MORL-170	L-12	Control System Evaluation - Internal Components
	"	L-13	Control System Evaluation - Reaction Control Components
	"	L-14	Control System Evaluation - Stability
	"	M-2	Identification & Analysis of Spacecraft
	AES	1601	Orbital Maneuvering Docking
	MORL-170	200020	Docking Techniques
Personnel Transfer/ Artificial Gravity (PT/AG)	Gemini	D12	Astronaut Maneuvering Unit (Flts. 9 & 12)
	"	D13	Astronaut Visibility (Flts. 5 & 7)
	MORL-170	L-4	Extravehicular Suit & Biopack Evaluation
	AES	1501	Advanced Space Suits
	MORL-170	121 thru 123	Performance of Man in Stabilizing Tumbling Satellite
Personnel Transfer/ Zero Gravity (PT/ZG)	Gemini	D12	Astronaut Maneuvering Unit (Flts. 9 & 12)
	"	D13	Astronaut Visibility (Flts. 5 & 7)
	MORL-170	L-4	Extravehicular Suit & Biopack Evaluation
	AES	1501	Advanced Space Suits
	"	1502	Manned Locomotion & Maneuvering

FIGURE 6.3.2 - RELATED ORL EXPERIMENTS -- PRESENT PLANNING-CONTINUED

EXPERIMENT CATEGORY	REFERENCE SOURCE	EXPM'T. NO.	EXPERIMENT TITLE
Personnel Transfer/ Zero Gravity (PT/ZG)	AES	1503	Emergency Rescue Operations
	"	1504	Personnel & Cargo Transfer
	MORL-170	100006	Crew & Cargo Transfer Techniques
	"	100007	Emergency Procedure Evaluation
	"	34 thru 38	Rescue
	"	115	Space Station Emergency Evaluation
	"	11	Extravehicular Visual Assessment
Cargo Transfer/ Artificial Gravity (CT/AG)	None Directly Applicable But Experiments Of The Following Category (CT/ZG) Are Indirectly Applicable.		
Cargo Transfer/Zero Gravity (CT/ZG)	AES	1504	Personnel & Cargo Tranfer
	MORL-170	100006	Crew & Cargo Transfer Techniques
	"	21-2	Maximum Maneuver Capability
	"	21-3	Conveyor System Operation
Erection & Assembly (EA)	Gemini	MSC1	Electrostatic Charge (Flts. 4 & 5)
	"	D16	Power Tool Evaluation
	MORL-170	L-3	Cold Welding of Metals in Space Environment
	"	L-9	Erection of Large Space Structures
	AES	1301	Environmental Effects on Structures
	"	1302	Deploy R.F. Reflective Structures
	"	1303	Extendable Rods Test
	"	1305	Deploy Gravity Gradient Structures
	"	1306	Large Aperture Erectable Antenna
	"	1507	Extravehicular Assembly Operations
Maintenance & Repair (MR)	Gemini	D16	Power Tool Evaluation
	MORL-170	L-3	Cold Welding of Metals in Space Environment
	"	L-7	Maintenance Problems in Zero "g" (Parts I, II, & III)
	"	L-8	Tests of Self-Sealing Structures
	AES	1505	Maintenance & Repair Techniques
	MORL-170	126	Emergency Procedure for Structural Failure of Space Vehicle
	"	125	Emergency Procedure for Loss of Communication

FIGURE 6.3.2 - RELATED ORL EXPERIMENTS -- PRESENT PLANNING-CONTINUED

EXPERIMENT CATEGORY	REFERENCE SOURCE	EXPM'T NO.	EXPERIMENT TITLE
Fluid/Propellant Transfer & Storage (F/PTS)	Apollo	MSC 13	Subcritical Cryogenic Storage
	Apollo	MSFC 3	Propellant Mass
	Gemini	MSFC 4	Liquid Interface Stability
	MORL-170	G-3	Density Profiles of Liquid in the Critical Region
	MORL-170	G-4	Absorption of Gases on Solid Surfaces
	AES	0602 A	Kinetics & Dynamics of Vapor/Gas Bubbles
	"	0602 B	Liquid Drop Dynamic Studies
	"	0603 A	Pool Boiling
	"	0603 B	Nucleate Condensation of Fluids
	"	0604	Density Gradient of Fluids
	"	1403	Fluid Management Tech. for LSS
	"	1506	Propellant Handling (Phases I & II)
	MORL-170	270000	Response of Part Filled Tank in Zero "g" Due to Translation Loads
	"	50 & 51	Tank and Intervehicular Fluid Transfer
Checkout (C/O)	Gemini	MSC 4	Optical Communication (Flt. 7)
	AES	1201	Radio Frequency Radiation
	AES	1202	Wide Bandwidth Transmission
	MORL-170	200012	Passive Communication Relay
	"	14	Emergency Communication System
	"	91	Secure Communications
	"	94	Assessment of Electronic Vulnerability, Comm. Sys.
	"	111 thru 114	Inspection Procedures -- Manned/Unmanned -- Intra/Extravehicular
	"	125	Emergency Procedure for Loss of Communication
	"	11	Extravehicular Visual Assessment
Launch (L)	MORL-170	K-4	Jet Flow in Vacuum
	MORL-170	M-1	Analysis of Ferry Vehicle Launch from Lab
	AES	1001	Small Maneuverable Satellite
	AES	1101	Launch of Unmanned Satellite
Miscellaneous Design & Operations (MDO)	Gemini	D2	Nearby Object Photography (Flts. 5 & 6)
	"	D3	Mass Determination (Flt. 6)
	"	D5	Star Occultation Navigation (Flts. 7 & 10)
	"	D8	Radiation in Spacecraft (Flts. 4 & 6)

FIGURE 6.3-2 - RELATED ORL EXPERIMENTS -- PRESENT PLANNING-CONTINUED

EXPERIMENT CATEGORY	REFERENCE SOURCE	EXPM'T NO.	EXPERIMENT TITLE
Miscellaneous Design & Operations (MDO)	Gemini	D9	Simple Navigation (Flts. 4 & 7)
	"	D15	Low Light Level TV (Flts 8 & 11)
	"	D17	Carbon Dioxide Reduction (Flts 8 & 12)
	"	S12	Micrometeorite Collection (Flts. 6, 9, & 10)
	Apollo	S18	Micrometeorite Collection (Flt. 205)
	Gemini	T2	Manual Navigation Sightings (Flt. 12)
	"	MSC4	Optical Communication (Flt. 7)
	MORL-170	C-7	Biological Monitoring of Life Support System
	"	C-22	Ventilation of Respired Gases
	"	C-25	Effects of High Energy Particulate Radiation on Selected Bacterials
	"	D-1	Ionizing Radiation Measurements
	"	D-2	Cosmic Dust Measurements
	"	D-3	Study of Meteoroid Physical Characteristics
	"	D-4	Measurements of External Atmosphere
	"	E-4	Extraterrestrial EM Radiation Survey (Parts I & II)
	"	F-1	Horizon Spectrometry
	"	F-2	Pllarization & Radiance of Sunlight Reflected & Scattered from the Earth & Atmospheric
	"	F-8	High Energy Particle Physics Using Spark Chambers
	"	G-1	Drag Studies
	"	G-2	Zero "G" Chemical Reactions
	"	G-4	Absorption of Gases on Solid Surfaces
	"	G-6	Non-Gravitational Forces
	"	H-1	Solar Absorptivity & Thermal Emissivity of Thermal Control Coating
	"	H-2	Fatigue Tests of Materials After Exposure
	"	H-3	Meteoroid Effects on Materials and Surface
	"	H-4	Meteoroid Penetration of Materials
	"	H-5	Activation Measurements
	"	I-3	Microwave Experiments
	"	I-4	HF Communication Experiment
	"	J-1	Gravity Gradient Components & Techniques Development Tests

FIGURE 6.3-2 - RELATED ORL EXPERIMENTS -- PRESENT PLANNING-CONTINUED

EXPERIMENT CATEGORY	REFERENCE SOURCE	EXPM'T NO.	EXPERIMENT TITLE
	MORL-170	J-2	Evaluation of Navigation Techniques
	"	K-1	Static Motion Tests of Interface Phenomena
	"	K-2	Convective Heat Transfer at Zero "G"
	"	K-3	Absorption of Gases by Liquids at Zero "G"
	"	K-4	Jet Flow in Vacuum
	"	L-1	Internal Laboratory Environment - Noise & Vibration
	"	L-2	Propagation & Control of Fire in Zero "G" - or Reduced G Environment
	"	L-3	Cold Welding of Metals in Space Environment
	"	L-4	Extravehicular Suit & Biopack Evaluation
	"	L-5	Evaluation of Oxygen Recovery System
	"	L-6	Analysis of Packaging Techniques
	"	L-8	Tests of Self-Sealing Structures
	"	L-12	Control System Evaluation - Internal Components
	"	L-13	Control System Evaluation - Reaction Control Components
	"	L-14	Control System Evaluation - Stability
	AES	0501	Radiation Environment Monitoring
	"	0504	Micrometeoroid Collection
	"	0601	Capillary Studies
	"	0606	Cosmic Ray Emulsion
	"	0202D	Prototype Star Tracker
	"	1001	Small Maneuverable Satellite
	"	1201	Radio Frequency Radiation
	"	1202	Wide Band Width Transmission
	"	1301	Environmental Effects on Structures
	"	1305	Deploy Gravity Gradient Structures
	"	1306	Large Aperature Erectable Antenna
	"	1402	Cabin Atmosphere for LSS
	"	1404	Radioisotope Power Supply
	"	1407	Advanced Navigation & Guidance
	"	1501	Advanced Space Suit
	MORL-170	100004	Evaluation of Instrument Display
	"	100007	Emergency Procedure Evaluation
	"	200005	Space Vehicle Thermal Equilibrium Study

FIGURE 6.3-2 - RELATED ORL EXPERIMENTS -- PRESENT PLANNING CONTINUED

EXPERIMENT CATEGORY	REFERENCE SOURCE	EXPM'T NO.	EXPERIMENT TITLE
	MORL-170	200007	Laser Systems Evaluation
	"	200012	Passive Communication Relay
	"	200017	Bearing Lube in Zero G
	"	200033	Analysis of S/C Perturbation Due to Crew Movement
	"	14	Emergency Communication System
	"	65 thru 67 69 & 117	Manual Navigation Techniques
	"	71	Assess Handling of Navigational Data
	"	91	Secure Communications
Personnel Condition (PC)	Gemini	S4	Radiation & Zero "G" on Blood (Flts. 3 & 8)
	"	S8	Visual Acuity (Flts. 5 & 7)
	Gemini & Apollo	M1	Cardiovascular Conditioning (Flts. 5, 7 & 204)
	Gemini	M3	In-Flight Exerciser (Flts. 4, 5, 7 & 205)
	Gemini & Apollo	M4	In-Flight Phonocardiogram (Flts. 4, 5, 7 & 205)
	"	M5	Bioassays Body Fluids (Flts. 6-12, 204 & 205)
	"	M6	Bone Demineralization (Flts. 4, 5, 7, 204 & 205)
	"	M7	Calcium Balance Study (Flts. 7 & 205)
	"	M9	Human Otolith Function (Flts. 5, 7, 205 & 205)
	Gemini	M8	In-Flight Sleep Analysis (Flts. 7 & 9)
	Apollo	M11	Cytogenic Blood Studies (Flts. 205)
	"	M12	Exercise Ergometer (Flts. 204 & 205)
	"	M17	Thoracic Blood Flow (Flts. 204 & 205)
	"	M18	Vectorcardiogram (Flts. 204 & 205)
	"	M19	Metabolic Rate Measurement (Flts. 204 & 205)
	"	M20	Pulmonary Function (Flts. 204 & 205)
	"	M21	Semicircular Canal Function
	"	M22	Red Blood Cell Survival
	"	M23	Lower Body Negative Pressure
	MORL-170	A-1	Long-Term Zero G Effects on Man
	"	A-2	Conditioning Devices and Techniques
	"	A-3	Ballistocardiograph vs. Vibrocardiograph
	"	A-4	Evoked Electromyography During Zero "G"
	"	B-2	Crew Performance Potential (Part I & Part II)
	"	B-3	Crew Performance in Orbital & Reentry Operations
	"	B-4	Study of Crew Performanc Relationships

FIGURE 6.3-2 - RELATED ORL EXPERIMENTS -- PRESENT PLANNING CONTINUED

EXPERIMENT CATEGORY	REFERENCE SOURCE	EXPM'T NO.	EXPERIMENT TITLE
	MORL-170	B-5	Plasticity in Human Sensiomotor Control
	"	B-6	Retention of Skills (Part I & Part II)
	"	C-1	Effects of Zero G at the Subcellular Level
	"	C-2	Effects of Zero G and Radiation on Bacteria
	"	C-6	Effects of High Vacuum & Radiation on Bacteria
	"	C-7	Biological Monitoring of Life Support Systems
	"	C-9	Effect of Zero G on Immune Defenses
	"	C-10	Effect of Zero G on Dividing Human Cells
	"	C-13	Effect of Zero G on DNA
	"	C-14	Tissue Regeneration and Wound Healing
	"	C-15	Function of Gravity - Sensitive Organs in Zero G
	"	C-21	Effects on Cerebral Neuronat & Glial Chemistry
	"	C-22	Ventilation of Respired Gases
	"	C-23	Changes in Vestibular Nerve Activity & Vestibulo-Mebry under Fractional G and Prolonged Zero G
	"	C-25	Effects of High Energy Particulate Radiation on Selected Bacterials
	"	L-10	Toxilogical Studies of Respiratory Gases (Parts I, II & III)
	AES	0101	Otolith Sensitivity
	"	0102	Head Rotation
	"	0103	Circulatory Response
	"	0104	Work Capacity & Circulatory Response
	"	0105	Body Fluid Volumes
	"	0106	Cardiovascular Reflexes
	"	0107	Venous Compliance
	"	0108	Circulatory Reflex Changes
	"	0109	Pulmonary Function
	"	0110	Ventilatory Gas Exchange
	"	0111	Muscle Mass/Strength
	"	0112	Mineral Metabolism
	"	0113	Nutritional Status
	"	0114	Gastrointestinal Mobility and PH
	"	0115	Thermal Regulation
	"	0116	Water Cooled Suit
	"	0117	Neuro-Endrocrine Function
	"	0118	Hemic Cell Study

FIGURE 6.3-2 - RELATED ORL EXPERIMENTS -- PRESENT PLANNING CONTINUED

EXPERIMENT CATEGORY	REFERENCE SOURCE	EXPM'T NO.	EXPERIMENT TITLE
	AES	0119	Hematological Defenses
	"	0120	Hemostasis
	"	0121	Microbiological Evaluation
	"	0201	Sensory and Perceptual Processes
	"	0202	Psychomotor Functioning
	"	0203	Higher Mental Processes
	"	0403	Effect of Weightlessness on Primates
	"	0404	Limb Regeneration & Wound Healing
	"	0501	Radiation Environment Monitoring
	"	0302	On-Board Centrifuge
	"	1401	Personal Hygiene and Food Tech.
	MORL-170	17-2	Handling Medical Supplies
	"	33	Work/Rest Cycle

****

SOURCE CODING	REFERENCE SOURCES OF EXPERIMENT LISTINGS
MORL-170	Douglas Report SM-48157, dated February 1965 - "Development of the Manned Orbital Research Laboratory (MORL) System Utilization Potential," Interim Report. Listing includes MORL Phases II & II-B, Extended Apollo (NAA) and OSSS Experiments.
Gemini	MSFC Memorandum R-AS-7-66, dated July 6, 1965, J. Carter to OLO Experiment Committee Members & Study Managers, "Gemini & Apollo Experiment Schedule."
Apollo	MSFC Memorandum R-AS-7-66, dated July 6, 1965, J. Carter to OLO Experiment Committee Members & Study Managers, "Gemini & Apollo Experiment Schedule."
AES	AES Experiment Program Discussions--Presentation Charts, May 12, 1965, NASA-MSC. North American Aviation, Inc., Final Report SID 65-500-2D, "Extended Apollo Systems Utilization Study," Addendum 1, May 5, 1965.

FIGURE 6.3-3 -- AES CAPABILITIES WITHIN CURRENT PLANNING

a. Orbital Transfer and Rendezvous

   1. Extension of Gemini and Apollo experience with primary command control assigned to ground stations.

   2. Some resupply experience using Apollo service and command modules.

b. Docking

   1. Limited docking between two Apollo command modules or between an Apollo command module and a passive satellite.

c. Personnel Transfer in Artificial Gravity Station

   1. Limited by confines of spacecraft's internal dimensions.

   2. Suits, tethers and basic support apparatus.

   3. Rescue techniques and hardware -- unstabilized station.

   4. No spin or despin at extended radii.

d. Personnel Transfer in Zero Gravity Station

   1. Considerable extension of Gemini and Apollo experience and equipment (intra- and extravehicular) (45-day mission duration)

   2. Rescue techniques and hardware -- unstabilized station.

e. Cargo Transfer in Artificial Gravity Station

   1. Primarily manual transfer of cargo within confines of spacecraft.

f. Cargo Transfer in Zero Gravity Station

   1. Considerable extension of Gemini and Apollo experience (intrav- and extravehicular)

   2. Possibly some conveyor system testing, but limited by spacecraft volumes and type of operations.

g. Erection and Assembly

   1. Limited - small masses and volumes.

h. Maintenance and Repair

   1. Selection of appropriate manual and some power hand tools.

FIGURE 6.3-3 -- AES CAPABILITIES WITHIN CURRENT PLANNING - Continued

2. Basic tool handling and M&R techniques.

3. Verification of suits and tethers best adapted to M&R activities (intra- and extravehicular).

4. Leak detection sensors and instrumentation.

5. Connector and sealing technology.

i. Fluid/Propellant Transfer & Storage

   1. Storage of cryogenics.

   2. Fluid dynamics in zero gravity and basic fluid handling techniques.

   3. Limited propellant transfer.

j. Checkout

   1. Limited to spacecraft systems, experiments and small satellite (OGO).

   2. Primarily status control.

k. Orbital Launch

   1. Deorbit operations.

   2. Limited recovery and relaunching of small unmanned satellites.

FIGURE 6.3-4 -- MORL CAPABILITIES WITHIN CURRENT PLANNING

a. Orbital Transfer & Rendezvous

   1. Extension of AES experience with established operational techniques and procedures for logistics resupply operations.

   2. Primarily manned spacecraft of the Apollo size with the mode of control yet to be determined. (Presently planned as ground control).

b. Docking

   1. Operational techniques, procedures and systems for logistics spacecraft (manned control).

c. Personnel Transfer in Artificial Gravity Station

   1. Limited by confines of spacecraft's internal dimensions.

   2. Suits, tethers and basic support apparatus.

FIGURE 6.3-4 -- MORL CAPABILITIES WITHIN CURRENT PLANNING - continued

3. No spin nor de-spin at extended radii.
4. Limited extravehicular activity and rescue.

d. Personnel Transfer in Zero Gravity Station
   1. Extended AES experience for intra- and extravehicular transfer.
   2. Rescue operations (limited to within 1/2 mile of MORL).

e. Cargo Transfer in Artificial Gravity Station
   1. Manual intra- and extravehicular cargo transfer.
   2. Limited mechanized systems.

f. Cargo Transfer in Zero Gravity Station
   1. Extended AES experience for intra- and extravehicular transfer of cargo.
   2. Some mechanized systems, limited to the spacecraft volume and type of operations.

g. Erection and Assembly
   1. Antennae deployments.
   2. Nuclear power systems handling and activation.

h. Maintenance and Repair
   1. Extended AES capability, but still limited primarily to modular-type M&R, i. e., remove and replace.

i. Fluid/Propellant Transfer and Storage
   1. Extended AES capability
   2. Fluid transfer and servicing (still limited propellant transfer).

j. Checkout
   1. On-board systems, experiments and logistics spacecraft.
   2. Status control and limited malfunction detection.

k. Launch
   1. Logistics spacecraft (manned).
   2. Limited unmanned satellites.

A comparison of these postulated capabilities of pre-OLO orbital research programs with the capabilities required in each category of operations for OLO was made and particular areas of capability deficiencies were noted. These deficiencies then became the subjects of possible additional experimentation required for developing the initial OLO capability. It should be noted, however, that the requirements established herein represent only the apparent needs commensurate with this level of study. In future preliminary and detailed OLF, OSE, and SCALE design studies, as well as more detailed operational studies, it can be expected that more specific orbital experimental requirements will become evident. At this stage of the study, general problems requiring experimental information for their resolution have been identified and experiments have been postulated to provide the necessary answers. However, each experiment may, in fact, represent a single experiment or may require a whole series of experiments. For example, in the area of personnel transfer in an artificial gravity station, there may be the requirement for personnel to be capable of extravehicular transfer while the station is rotating. The economics of despinning the station for minor repairs and adjustments may not justify that type of an operation and emergency conditions may require extravehicular activity capability during spinning. There will probably be a whole series of experiments required to assure adequate capability in this area.

Figure 6.3-5 presents the list of possible experiments extracted from this analysis for each category of operation intended for OLO. The asterisked experiments are those which were considered of prime concern to the OLF development and were delegated to the OLF study for further definition. Unasterisked experiments were assigned to LTV for further definition and the checkout category of experiments was to be analyzed by Lockheed. Most of the experiments listed in the figure are Phase I and Phase II technological experiments, although the completion of many would carry into the Phase III operational experiment regime.

Figure 6.3-6 presents brief descriptions of each experiment category shown in Figure 6.3-5, stipulating in greater detail the assumed capabilities of pre-OLO programs with respect to each category, and presents some reasoning behind the identification of the experiment requirement possibilities which are also listed in Figure 6.3-5.

FIGURE 6.3-5 OLO EXPERIMENT CATEGORIES & POSSIBLE EXPERIMENTS

CATEGORY		EXPERIMENT TITLE
Orbital Transfer and Rendezvous (OTR)	1.	Manned Vehicle - Earth-Based Command Control
	2.	Manned Vehicle - Autonomous Command Control
	3.	Manned Vehicle - Orbit Based Command Control
	4.	Unmanned Vehicle - Orbit Based Command Control
Docking (D)	1.	Autonomous Control - Agena Test Vehicle
	2.	ORL Manual Control - Agena Test Vehicle
	3.	OSE Retrieval - Agena Test Vehicle
	4.	Autonomous Control - Apollo Test Vehicle
	5.	ORL Manual Control - Apollo Test Vehicle
	6.	OSE Retrieval - Apollo Test Vehicle
	7.	Autonomous Control - Large Test Vehicle
	8.	ORL Manual Control - Large Test Vehicle
	9.	OSE Retrieval - Large Test Vehicle
Personnel Transfer/ Artificial Gravity (PT/AG)	*1.	Intravehicular Transfer
	*2.	Extravehicular Transfer
Personnel Transfer/Zero Gravity (PT/ZG)		No additional capability requirement contemplated.
Cargo Transfer/Artificial Gravity (CT/AG)	*1.	Extravehicular Transfer - Rotating Station
	*2.	Intravehicular Transfer - Rotating Station
Cargo Transfer/Zero Gravity (CT/ZG)	*1.	Conveyor System - Zero Gravity
	*2.	Separation System - Spacecraft Modules
Erection and Assembly (EA)	*1.	Vacuum Welding Techniques
	*2.	Extendable Umbilical Tower
	*3.	Extendable Structure Operations
	*4.	Internal Structural Assembly Procedures
	*5.	Removal, Transfer and Installation Of Passive Structure
	6.	Alignment and Assembly Demonstration for OLV
	*7.	MORL Stabilization w/Scaled OLO Hardware
	*8.	Explosive Separation System Debris Hazard
	9.	Explosive Separation System Environmental Effects
	*10.	Space Vehicle Static Electricity Potential

FIGURE 6.3-5 OLO EXPERIMENT CATEGORIES & POSSIBLE EXPERIMENTS - Continued

CATEGORY	EXPERIMENT TITLE
Maintenance and Repair (MR)	*1. Structural Repair - Welding Techniques
	*2. Structural Repair -Emergency Techniques
	*3. Special Personnel Tools
	*4. Special Repair Shop Tools
	*5. Leak Detection - Life Support Structure
Fluid/Propellant Transfer and Storage (F/PTS)	1. Mass/Volume Determination - Zero Gravity
	2. Mass/Volume Determination - During Transfer
	3. Self-Aligning Fluid Couplings
	4. Manual Operated Fluid Couplings
	5. Linear Acceleration Transfer System
	6. Angular Acceleration Transfer System
	7. Surface Tension Transfer System
	8. Capillary Action Transfer System
	9. Dielectrophoresis Transfer System
	10. Momentum Transfer- Transfer System
	11. Leak Detection System
	12. Propellant Tanks Venting System
	13. Propellant Tanks Insulation
	14. Propellant Tanks Surface Coatings
	15. Propellant Transfer System Optimization
Checkout (C/O)	Identified and defined by Lockheed as part of their Space Checkout & Launch Equipment Study.
Launch (L)	*1. Thrust Motor - Jet Exhaust Effects
	*2. Space Vehicle Explosion - Debris Hazard

* Denotes those experiments which were considered of prime interest in the OLF development and which were therefore delegated to the OLF study for further definition.

FIGURE 6.3-6 CATEGORY DESCRIPTIONS & EXPERIMENT IDENTIFICATION

EXPERIMENT CATEGORY: ORBITAL TRANSFER & RENDEZVOUS (OTR)

1. Description

This category of experiments is intended to provide the empirical data required in developing the operational capability of launching manned and unmanned vehicles from Earth, injecting into a parking orbit injecting into an elliptical transfer-intercept orbit, and rendezvousing with the orbiting target vehicle. Achieving this capability not only requires developing the flight mechanics and appropriate propulsion systems, but also requires the investigation of various possible control modes, selection of an optimum mode, and development of reliable control systems and procedures.

2. Assumptions & Guidelines

Earlier programs have already provided much of this capability, particularly with respect to launching and orbiting unmanned and manned spacecraft. Other planned programs will provide additional capability required in these operations. The extent of that capability acquired from previous programs, as well as that expected from the planned Gemini,Apollo, AES, and MORL programs, is assumed to be as follows:

a. Past and present unmanned orbital satellite and manned orbiting spacecraft programs have provided and will continue to provide the verification of basic flight mechanics required for Earth launch, orbital injection and ejection, and return to Earth via low L/D ballistic-type reentry.

b. The Gemini will provide the basic rendezvous capability, with AES and MORL programs refining and perfecting the techniques.

c. The capability developed in planned programs extending through MORL is assumed to be limited to Earth-based command control of the launch and orbit injection operations. Autonomous control of the manned Gemini and Apollo spacecrafts will be exercised in the rendezvous maneuvers, with limited remote control of the target vehicle from Earth and/or the manned spacecraft.

d. The OLF is assumed to be a passive orbital target during rendezvous maneuvers, but may serve as command control center if that mode proves most reliable.

3. Experiment Requirements

The prime area of experiments required to provide the necessary capability, beyond that expected from presently planned programs, appears to be in operations control. Since the orbital launch operations necessitate fairly precise positioning of the OLF in orbit with respect to time, the OLF will probably have to remain passive with respect to rendezvous maneuvers (as assumed). This suggests the necessity of using the most accurate and most reliable source of command control possible for rendezvousing vehicles with the OLF. For unmanned vehicles, considerable evaluation data should have been acquired for Earth-commanded con-

FIGURE 6.3-6 CATEGORY DESCRIPTIONS & EXPERIMENT IDENTIFICATION - continued

trolled maneuvers. Experiments should, therefore, be designed to adequately compare and evaluate methods of transfer and rendezvous for the following cases:

a. Manned vehicle - Earth-base command control (OTR-1)*

b. Manned vehicle - Autonomous command control (OTR-2)

c. Manned vehicle - Orbit-based command control (OTR-3)

d. Unmanned vehicle - Orbit-based command control (OTR-4)

EXPERIMENT CATEGORY: DOCKING (D)

1. Description

This category of experiments is intended to provide the empirical data required in developing the operational capability of docking space vehicles of various size and mass, manned and unmanned, with the OLF or with another vehicle already docked to the OLF. Achieving this capability requires the development of docking radar and/or other distance and attitude sensing and display systems, remote docking control systems, and the techniques and procedures required for accomplishing these operations. The docking maneuvers are defined for this study as the final closing maneuvers of two or more rendezvoused vehicles.

2. Assumptions & Guidelines

Some of the docking capability required in the orbital launch operations will be developed in the presently-planned orbital research programs. The extent of that capability is assumed to be as follows:

a. The basic docking maneuvers for small mass systems will be developed in the Gemini program, wherein the Gemini spacecraft will dock an Agena stage. Although the Agena will be capable of being maneuvered for rendezvous by either Earth or spacecraft control, the stage will remain inertially stabilized and passive in the docking operations.

b. Similar capability will be developed in the Apollo program, but involving larger mass systems. The Apollo spacecraft will maneuver by autonomous control to dock with the passive, inertially stabilized, LEM and S-IVB Stage.

c. Docking mechanisms will be developed and proven in the Gemini and Apollo programs, as will automatic electrical umbilical engagement mechanisms.

d. In addition to refining docking mechanisms, techniques and procedures, the AES and MORL programs will work with increasingly greater masses, but will be limited to mass sizes of the Apollo logistics vehicle as the active vehicle and the MORL module as the passive vehicle. The distribution of control will not appreciably differ from that in the basic Gemini and Apollo programs.

3. Experiment Requirements

It presently appears that the primary area of technological experimen-

FIGURE 6.3-6 CATEGORY DESCRIPTIONS & EXPERIMENT IDENTIFICATION - continued

tation required to develop the orbital launch operations docking capability beyond that planned for the MORL program is the evaluation of different modes of docking for different mass systems. At least three modes should be compared: (1) autonomous control aboard the docking vehicle; (2) remote control of the docking vehicle with the control centered on board the orbiting station; and (3) retrieval (or tug-) type operation, using some manner of OSE such as an Orbital Support Assembly Vehicle (OSAV), Astronaut Maneuvering Units (AMU), etc. Experiments proposed to provide the necessary evaluation information are as follow:

a. Autonomous Control - Agena Test Vehicle (D-1)*

b. ORL Manual Control - Agena Test Vehicle (D-2)

c. OSE Retrieval - Agena Test Vehicle (D-3)

d. Autonomous Control - Apollo Test Vehicle (D-4)

e. ORL Manual Control - Apollo Test Vehicle (D-5)

f. OSE Retrieval - Apollo Test Vehicle (D-6)

g. Autonomous Control - Large Test Vehicle (D-7)

h. ORL Manual Control - Large Test Vehicle (D-8)

i. OSE Retrieval - Large Test Vehicle (D-9)

* Abbreviations in parentheses are the experiment category abbreviation and experiment dash number for reference coding.

EXPERIMENT CATEGORY:
PERSONNEL TRANSFER/ARTIFICIAL GRAVITY (PT/AG)

1. Description

This category of experiments is intended to provide the empirical data required in developing the capability of man to maneuver himself in a rotating artificial gravity station as required to perform the normal functions of living in an orbiting station and to perform his assigned task in the orbital launch operations. If artificial gravity is considered necessary or desirable, it will be necessary to determine the feasibility of man moving through or functioning in various centrifugal acceleration fields that would exist at different radii in a spinning station. Inasmuch as personnel transfer operations within an unstabilized tumbling spacecraft may be somewhat similar to those in a stabilized rotating station, experiments in this regard are also considered in this category. Procedures and support equipment will have to be developed for accomplishing the required activities.

2. Assumptions & Guidelines

The necessity of this category of experiments is based primarily on the premise that a spinning, artificial gravity station will be either required or at

FIGURE 6.3-6 CATEGORY DESCRIPTIONS & EXPERIMENT IDENTIFICATION - continued

least desirable from an experimental standpoint, if not for reasons of personnel well-being. All of the presently planned programs are primarily intended for zero "g" operation with only limited experimental rotation, therefore, little or no orbital experience in a rotating station will be acquired within present planning prior to the OLF. Present ground-based simulators are incapable of simulating the artificial gravity condition (produced by station rotation) in a zero gravity environment. The capabilities of planned orbital systems to provide experimental facilities under these conditons are assumed as follows:

a. Gemini and Apollo systems will be limited in their facility for personnel transfer experimentation in rotating station conditions to very short transfer experimentation in rotating station conditions to very short rotational radii (internal dimensions of the spacecraft).

b. MORL and AES systems in their zero "g" configurations will be limited also to short rotational radii, either in rotating the station about its own axis or in using the centrifuges.

c. Contemplated configurations of AES and MORL for artificial gravity will provide experimental facility at various rotational radii, but the extent of personnel transfer through various levels of artificial "g" within the facility will still be limited to the internal dimensions of the spacecraft iteelf.

d. The artificial gravity operational capability that is expected to be derived from the presently planned AES and MORL programs is limited to adaptationof personnel to orientation and motion within the confines of the spacecraft at different radii from the center of rotation. These cable-connected systems do not allow starting or stopping the rotation of the station at extended radii, nor is an internal transfer from one radial extreme to another possible.

3. Experiment Requirements

If a rotating station is used, it will be essential to know how a man can and should move both intra- and extravehicularly. In most cases, extravehicular operations would be most desirable during non-spinning periods, however, it may prove advantageous to perform some activities exterior to the station without having to stop the spin, particularly in large mass stations, where the spin-down and spin-up may be expensive as well as inconvenient. Certainly in emergency situations a primary concern will be in getting the individuals in or out of the station. Therefore, some of the prime areas of experimentation required are as follows:

a. Intravehicular Transfer - Rotating Station (PT/AG-1)*

b. Extravehicular Transfer - Rotating Station (PT/AG-2)

* Abbreviations in parentheses are the experiment category abbreviation and experiment dash number for reference coding.

FIGURE 6.3-6 CATEGORY DESCRIPTIONS & EXPERIMENT IDENTIFICATION - continued

EXPERIMENT CATEGORY:
CARGO TRANSFER/ARTIFICIAL GRAVITY (CT/AG)

1. Descriptions

This category of experiments is intended to provide the necessary empirical data for developing the operational capability for transporting cargo within and exterior to the orbiting station while it is rotating in the artificial gravity mode. Developing such capability will require an investigation of the mechanics of moving masses around in variable gravity fields and the effects of these motion characteristics on support equipment design. This must be followed by the development of techniques, procedures, and equipment, from selected concepts, to facilitate these operations. This category is intended to include all solids or packaged mass transfer operations in a rotating station except personnel transfer, which is discussed in a separate category. Fluids transfer also is discussed in a separate category.

2. Assumptions & Guidelines

This category of experiments is based upon the premise that a spinning, artificial gravity station will be necessary or desirable. It is further assumed that mass transfer will be required during the rotational mode. The presently planned programs are all primarily intended for zero "g" operation. Although some concepts have made some provision for artificial gravity experimentation, the present concepts and planning allow for only limited orbital experience in the artificial gravity mode.

The inability of ground simulators to simulate artificial gravity in a zero "g" environment may necessitate a considerable amount of orbital testing in this area. Specifically, the capabilities expected from the pre-OLF programs, as presently planned, are as follows:

a. Gemini and Apollo programs will provide essentially no capability in this regard.

b. AES artificial gravity concepts and associated planned experimentation will provide limited capability of moving solid or packaged masses within the confines of the spacecraft during station rotation.

c. MORL artificial gravity concepts and planned experimentation will extend AES experience within the internal confines of the MORL spacecraft and will provide limited extravehicular cargo transfer experience.

d. Mechanized cargo transfer equipment will be limited by spacecraft volume and operational limitations.

3. Experiment Requirements

In the event that a rotating artificial gravity station is required or desired, the movement of solid or packaged masses, such as parts, supplies, tools

FIGURE 6.3-6 CATEGORY DESCRIPTIONS & EXPERIMENT IDENTIFICATION - continued

and other equipment, will still be necessary. Similarly, external repair during rotation, either of a minor nature where despinning is impractical or in an emergency case where despinning is impossible, also necessitates external cargo transfer capability. One of the major problem areas, which requires investigation for these type operations, is in transferring cargo from one radial extreme to the other. The variations in gravity with respect to radial distance from the center of rotation may require special techniques, equipment, and procedures. Numerous series of experiments may be required; these can be classified generally into the following basic requirements:

a. Extravehicular Transfer-Rotating Station (CT/AG-1)*

b. Intravehicular Transfer-Rotating Station (CT/AG-2)

* Abbreviations in parentheses are the Experiment category abbreviation and experiment dash number for reference coding.

EXPERIMENT CATEGORY:
CARGO TRANSFER/ZERO GRAVITY (CT/ZG)

1. Description

This category of experiments is intended to provide the empirical data required for developing operational capability in transporting cargo within and exterior to the orbiting station while the station is functioning in a zero gravity mode of operation. For this category, "cargo transfer" includes the movement of all solids or packaged masses within or in close proximity to the station, except personnel transfer which is discussed in another category. Developing this cargo moving capability requires a knowledge of the mechanics of moving masses about in zero gravity and reorienting man's gravity-oriented instincts for manual movement of objects in such an environment. Special equipment must also be designed and qualified for handling cargo in this unusual condition.

2. Assumptions & Guidelines

Inasmuch as the primary mode of operation of the Gemini, Apollo, AES, and MORL systems is intended to be without artificial gravity, considerable mass moving capability should be acquired in those programs as presently planned.

a. The capability accrued in the Gemini and Apollo programs will be limited primarily to manual movement of masses of relatively small volume and mass over short distances. Some experience in extravehicular movement of cargo will also be acquired.

b. The AES program will extend the capability of manually moving cargo within and exterior to the station and will provide the initial experimental experience with mechanized cargo handling systems, such as a conveyor.

FIGURE 6.3-6 CATEGORY DESCRIPTIONS & EXPERIMENT IDENTIFICATION - continued

c. The MORL program will further extend the capability, both intra- and extravehicularly. Techniques and procedures for manual cargo operations will be pretty well established. Experience in mechanized cargo moving equipment still will be limited to that required in support of the logistics resupply operation.

3. Experiment Requirements

The experience gained through the pre-OLF programs as presently planned should provide sufficient capability in manual transfer of cargo in the zero "g" condition. At least sufficient familiarity with the basic maneuvers required should have been acquired to allow rapid adaptation to any peculiarities in OLF operations. The logistics resupply operation in the MORL program should provide some opportunity for developing and testing mechanized cargo handling equipment; however, added experience and development will be required in this area, as suggested below. Another experimental requirement, that of developing separation systems, is included below because it is somewhat related to the extravehicular mass separation and movement problems. The prime areas, then, requiring experimentation at this level of analysis are:

a. Conveyor (or other mechanized) System-Zero Gravity * (CT/ZG-1)

b. Separation System - Spacecraft Modules (CT/ZG-2)

* Abbreviations in parentheses are the Experiment Category abbreviation and experiment dash number for reference coding.

EXPERIMENT CATEGORY:
ERECTION & ASSEMBLY (EA)

1. Description

This category of experiments is intended to provide the empirical data required for developing operating capability in erection and assembly operations required in the OLF activation from simple antenna deployments to assembling massive structures in the orbital environment. Although these operations do involve a multitude of capabilities, such as cargo and personnel transfer in both intra- and extravehicular environments, docking and mating, and inspection and checkout, several of these activities are required in other operations as well hence are not included in this category but discussed as separate categories. Developing the necessary erection and assembly capabilities requires developing techniques, procedures, and proficiency in the activities mentioned above, as well as in structural joining, extensions, stabilization, alignment, etc.

2. Assumption's & Guidelines

Until such time as the basic capability of man to exist and function usefully in space has been proven, the systems to be used in space activities will require a minimum of orbital assembly and/or erection. Presently planned programs follow this premise, providing a progressive development of this capability as the feasibility is provided. Pre-OLF programs, as presently programmed, will provide the following capability:

FIGURE 6.3-6 CATEGORY DESCRIPTIONS & EXPERIMENT IDENTIFICATION - continued

a. The Gemini systems, as such, presently require little or no erection or assembly, although some basic operations will be tested and some capability achieved during the program.

b. The Apollo systems likewise do not require erection and assembly for survival in orbit, but will require very basic separation, docking, and mating of system modules in the performance of the lunar mission. No extravehicular support activities in orbit are required nor are explicit activities planned at this time.

c. The AES program will provide the first appreciable experience in erection and assembly in orbit. The capability developed in this program, however, will be limited to fairly small masses and volumes and relatively simple operations.

d. The MORL program will extend the capability accrued by the AES program, developing and selecting acceptable techniques and procedures and the associated support equipment and tools. Assembly experience will be limited to fairly small equipment.

3. Experiment Requirements

The development of general methods of handling and maneuvering equipment, joining components and modules, and connecting conduits, umbilicals, and cables in intravehicular and extravehicular erection and assembly appear to be adequately provided for in the pre-OLF programs and some of the other experiment categories proposed herein. Likewise, the development of items of general support equipment such as tools (powered and manual), AMUs, RMUs and tethers is also assumed to be already planned. The prime areas requiring experimentation appear to be mostly in those areas of OLF or OLO peculiarity, i.e., where the size of systems involved, the type of equipment used, the type of operations, the operating conditions expected, etc. may be peculiar to the OLF or OLO. Some such additional experiment requirements are as follows:

a. Vacuum Welding Techniques *(EA-1)

b. Extendable Umbilical Tower (EA-2)

c. Extendable Structure Operations (EA-3)

d. Internal Structural Assembly Procedures (EA-4)

e. Removal, Transfer & Installation of Passive Structure (EA-5)

f. Alignment and Assembly Demonstration for OLV (EA-6)

g. OLF Stabilization with Scaled OLO Hardware (EA-7)

h. Explosive Separation System - Debris Hazard (EA-8)

FIGURE 6.3-6 CATEGORY DESCRIPTIONS & EXPERIMENT IDENTIFICATION - continued

i. Explosive Separation System - Environmental Effects (EA-9)

j. Space Vehicle Static Electricity Potential (EA-10)

* Abbreviations in parentheses are the experiment category abbreviation and experiment dash number for reference coding.

EXPERIMENT CATEGORY:
MAINTENANCE & REPAIR (MR)

1. Description

This category of experiments is intended to provide the empirical data necessary for developing maintenance and repair capability required in the orbital launch operations. Initial intentions are to provide only minor repair capability on board the OLF beyond the "remove and replace -- modular repair" capability. The prime development requirements are then concerned with scheduled maintenance of the facility, OSE and OLV, with the predictable unscheduled maintenance, which will require module replacements and with only minor repair for unpredictable unscheduled maintenance. Developing this capability will require adapting many of the techniques and procedures learned from earlier programs to the orbital launch operations application and developing new tools, equipment, techniques, and procedures where OLO-peculiar requirements arise. The experiments included in this category are primarily concerned with developing these special capabilities. The maintenance and repair requirements involve various skills, many of which are discussed under other more appropriate categories, such as personnel and cargo transfers, erection and assembly, etc.

2. Assumptions & Guidelines

Much of the basic capability required for the orbital launch operations will have been developed as part of the pre-OLF orbital research programs. The extent of this capability that is assumed to be forthcoming from these programs, as presently planned, is as follows:

a. The capabilities to be acquired in the Gemini program will be limited to testing of some manual and powered-hand tools and the handling of relatively small masses.

b. The Apollo program will utilize and probably refine basic techniques, procedures and tools developed in the Gemini program and may add some special developments as may be required by the specialized nature of the mission and its associated equipment.

c. The AES program will provide extensive refinement in the general maintenance and repair techniques and equipment, but will still be limited to relatively small mass experiments and to those requiring only small quantities of electrical power. Welding capability development is not planned in this program.

FIGURE 6.3-6 CATEGORY DESCRIPTIONS & EXPERIMENT IDENTIFICATION - continued

d. The MORL program will provide significant refinements and additional developmental data for maintenance and repair techniques and operations, tools, fasteners, equipment maintainability, supports and tethers, safety, and special test equipment. Extensive welding development is not yet planned in the MORL program, particularly with respect to emergency repairs.

3. Experiment Requirements

In general it can be assumed that most of the basic capability required in OLO will be developed in the earlier orbital research programs as presently planned. However, there are some areas that are peculiar to the OLF (and perhaps other larger systems as well) that probably will require additional orbital experimentation. These include:

a. Structural Repair - Welding Techniques *(MR-1)

b. Structural Repair - Emergency Techniques (MR-2)

c. Special Personnel Tools (MR-3)

d. Special Repair Shop Tools (MR-4)

e. Leak Detection - Life Support Structure (MR-5)

*Abbreviations in parentheses are the experiment category abbreviation and experiment dash number for reference coding.

EXPERIMENT CATEGORY:
FLUID/PROPELLANT TRANSFER & STORAGE (F/PTS)

1. Description

This category of experiments is intended to provide the empirical data necessary for developing the capability of storing and transferring various fluids required in the orbital launch operations. The primary fluids involved include storable propellants (N_2 O_4 & UDMH), gaseous helium, gaseous and liquid nitrogen and oxygen, lubricants, refrigerants, water, and hydraulic fluids. The orbital launch operations necessitate at least 135-day storage of most fluids with normal replenishment every 90 days. The transfer of fluids required in these operations include water transfer within the OLF for c.g. control, transfer of replenishment fluids from logistics vehicles to storage containers in the OLF, transfer of servicing fluids from OLF storage to using systems on board the OLF, the OLV, tankers, logistics vehicle or other OSE. One of the major fluid transfers required is the cryogenic oxygen transfer from the tankers to the OLV booster stage for which the OLF provides the interconnecting transfer system. To provide the necessary capability, a good understanding of the behavior of these various fluids in the zero gravity space environment must be established. Equipment and procedures must be developed for storing, handling and transferring these fluids. Means of maintaining these systems and detecting leaks or other malfunction must be established.

FIGURE 6.3-6 CATEGORY DESCRIPTIONS & EXPERIMENT IDENTIFICATION - continued

2. Assumptions & Guidelines

Some basic information concerning fluid behavior characteristics in the zero gravity environment was acquired in the orbital flights of the Mercury program. Some additional information has been obtained in unmanned satellite experiments, but the bulk of the information required for OLO will be accrued in the Gemini, Apollo, AES and MORL programs. The extent of the capability expected from these pre-OLF programs within present planning is as follows:

a. The Gemini and Apollo programs will provide only very basic information with regards to fluid characteristics in zero gravity conditions, primarily that information required for the operation of their own systems. Relatively short-term experience with storage of both sterable and cryogenic propellants will be accrued in these programs.

b. The AES program will extend our experience considerably in fluid characteristics and reactions in zero gravity. Added experience will be acquired in cryogenics storage, fluid handling and basic propellant transfer.

c. Considerably more capability will be achieved in the MORL program with respect to fluid characteristics, storage and fluid transfer, both intra- and intervehicularly. Of particular value will be the extended continuous orbital experience wherein the period between resupply is expected to be similar to that planned for the OLF (90-day resupply).

3. Experiment Requirements

It appears that the basic knowledge of fluid dynamics and fluid reactions in the zero gravity and orbital space environment will be acquired in the pre-OLF programs as presently programmed. Further developments required for the orbital launch operations will be primarily directed at evaluating and selecting particular methods of operation and developing the necessary systems and the associated operation and maintenance support equipment. Some of the experimental areas, which presently appear to be required are as follows:

a. Mass/Volume Determination - Zero Gravity *(F/PTS-1)

b. Mass/Volume Determination - During Transfer (F/PTS-2)

c. Self-Aligning Fluid Couplings (F/PTS-3)

d. Manual-Operated Fluid Couplings (F/PTS-4)

e. Linear Acceleration Transfer System (F/PTS-5)

f. Angular Acceleration Transfer System (F/PTS-6)

g. Surface Tension Transfer System (F/PTS-7)

FIGURE 6.3-6 CATEGORY DESCRIPTIONS & EXPERIMENT IDENTIFICATION - continued

h. Capillary Action Transfer System (F/PTS-8)

i. Dielectrophoresis Transfer System (F/PTS-9)

j. Momentum Transfer-Transfer System (F/PTS-10)

k. Leak Detection System (F/PTS-11)

l. Propellant Tanks Venting System (F/PTS-12)

m. Propellant Tanks Insulation (F/PTS-13)

n. Propellant Tanks Surface Coatings (F/PTS-14)

o. Propellant Transfer System Optimization (F/PTS-15)

* Abbreviations in parentheses are the experiment category abbreviation and experiment dash number for reference coding.

EXPERIMENT CATEGORY:
CHECKOUT (C/O)

1. Description

This category of experiments is intended to provide the empirical data necessary for developing the capability of checkout systems in the orbital environment prior to systems activation and periodic checkout during routine operations. The checkout operations of OLO involve visual inspections (both interior and exterior); data analysis and malfunction detection; systems and subsystems servicing and activation; alignment, interference and compatibility checks; mission simulations; computer operations, program modifications and verification; console operation; checkout and launch equipment calibration and maintenance; and OLV launch countdown and control. Development of the checkout capability required to accomplish these operations includes developing techniques and procedures and associated checkout and data transmission, analysis, and display equipment. Many of the skills required in the checkout operations are common to many other activities as well, such as intra- and extravehicular personnel and cargo transfer, and are discussed separately under more appropriate categories.

2. Assumptions & Guidelines

Considerable experience in checkout has been and presently is being accrued in the manned orbital flights of Mercury and Gemini. However, this experience is limited in scope and considerably more is required for the OLO capability. The capability expected from the pre-OLF orbital programs within present planning is as follows:

a. The capability expected from the Gemini program will be limited strictly to orbital checkout of the Gemini systems themselves with some assistance from ground stations.

FIGURE 6.3-6 CATEGORY DESCRIPTIONS & EXPERIMENT IDENTIFICATION - continued

b. The Apollo program will extend the checkout capability to the checkout of three modules before and following various docking, separation, redocking and personnel transfer operations.

c. The AES program will also provide some experience in multiple module checkouts before and following major operations such as rendezvous and docking and will provide experience in routine status control and experiment checkout operations.

d. The MORL checkout requirements for on-board systems, as well as experiments and the logistics spacecraft, will provide the basic checkout capability required for the OLF and its associated logistics resupply operations, but will probably not fulfill the total orbital launch operations checkout capability requirements.

3. EXPERIMENT REQUIREMENTS

Since the pre-OLF orbital programs as presently planned will provide most of the basic checkout capability required in OLO, the prime areas of additional experimentation requirements are in the checkout, countdown and launch of the OLV spacecraft and booster. The definition of experiments required to develop this capability is part of the NASA's SCALE Study performed by Lockheed Missiles and Space Company.

EXPERIMENT CATEGORY:
LAUNCH (L)

1. Description

This category of experiments is intended to provide the empirical data necessary for developing the capability of launching a manned spacecraft from orbit into a Mars flyby trajectory or possibly other interplanetary or lunar trajectories. Most of the pre-launch and actual launch activities are included in the checkout category, therefore, the areas of primary interest herein are the actual mechanics of the orbital launch and the effects on support equipment design and operations. Development of the necessary capability, in this regard, requires a good understanding of orbital and flight mechanics for launching a system from orbit. The techniques and procedures must then be developed and proven and the supporting systems designed and qualified.

2. Assumptions & Guidelines

Much of the basic knowledge of orbital mechanics and of actual launching of spacecraft from orbit should be acquired through the unmanned space programs of Ranger, Mariner, Lunar Orbiter, Surveyor and possibly Voyager. Although none are launched from a station, the basic orbital launch is practically the same. The additional capabilities expected from the pre-OLF orbital programs, within present planning, are as follows:

FIGURE 6.3-6 CATEGORY DESCRIPTIONS & EXPERIMENT IDENTIFICATION - Continued

a. The Gemini program will probably offer no significant contribution to the development of this capability.

b. The Apollo program will provide some useful experience along these lines in the launch (deorbit) of the LEM from the command and service module (CSM) for descent to the lunar surface; also in the separation of CSM and LEM and launch of CSM from lunar orbit for return to the earth.

c. The AES experimental program will provide some small satellite recovery and reorbiting which will also add useful experience.

d. The MORL program will add considerable experience in the routine logistics resupply operation in separating and deorbiting the logistics spacecraft. Also in the MORL experimentation plan, specific effort is planned for investigating orbital launch of ferry vehicles.

3. Experiment Requirements

From the technological standpoint, it appears that the basic data required to accomplish the orbital launch will have been acquired in the programs as presently conceived. However, several support equipment factors appear to require some resolution and eventually an operational verification of techniques, procedures and equipment will be necessary. Two possible areas of technological experimentation that will probably be required are:

a. Thrust Motor-Jet Exhaust Effects *(L-1)

b. Space Vehicle Explosion-Debris Hazard (L-2)

* Abbreviations in parentheses are the experiment category abbreviation and experiment dash number for reference coding.

6.3.2.2 Experiment Description. - Following the identification of OLO orbital experimentation requirements and the assignment of experiment description responsibility, as noted in previous paragraphs, each experiment requirement was analyzed in sufficient depth to provide a reasonable basis for describing the experiment or series of experiments, as may be necessary and for estimating their basic requirements. The descriptions were prepared on a format stipulated by the OLO experimentation committee which included the title and coding of the experiment category; the experiment number (which consisted of the experiment category code and a dash number); the experiment title; justification for performing the experiment; a summary description of the experiment/s which basically included the goal of the experiment, expected results, and applicability to, or effects on other phases of the space program; a brief description of what the experimental procedure might be; and the basic experiment requirements in terms of orbit required, experiment mass, volume, power, duration, number of times per flight and total experiment man-hours; some suggestion as to the possible implementation of the experiment/s; and an experiment sketch, if appropriate. As mentioned previously, the OLO-required experiments identified in Figure 6.3-5 may demand that more than one experiment be performed to provide the information required. Although the depth of experiment investigation warranted within the OLO studies was rather shallow, it was determined necessary that at least a preliminary experiment summary description and operational procedure be formulated. This provided at least some insight into what the equipment requirements might be and provided a reasonable basis upon which to estimate experimental masses, power, volume, manpower, etc. The following pages present the experiment descriptions for the 20 OLO experiments of primary interest in the OLF development, plus one additional subexperiment (MR-4-1). It should be understood that several of the experiments described are extensions of or supplemental to experiments which are presently in planning; therefore, the manhour requirements estimated may be for the remaining experimentation required. Several experiments may appear to be a part of, or could be accomplished in conjunction with, another experiment. No attempt has been made at this point to combine the experimental requirements, in anticipation that in more detailed future studies either the number of individual experiments that may be necessary or the total experiment requirements may cause some divergence in what may now appear to be common grounds for experiment combinations. Following the experiment descriptions, Figure 6.3-7 summarizes the postulated experiment requirements. Only four of the 21 experiments specify particular orbital requirements, and even they are not too stringent. The maximum mass estimated for any one experiment is 794 kg (1754 lbm). The volumes estimated for anyone experiment are less than 6.5 m^3 (230 ft^3). All of the estimated power requirements appear to fall within the capability considered for AES. Serveral of the experiment duration, times per flight, and man-hours per day requirements are undefined at this time; however, none of those that were determinable appeared to be overly demanding. The total man-hour estimate for the entire 21 experiments identified was 2279 man-hours.

The next phase of the study involved ranking the defined experiments in order of importance to the OLF development. A basic method of establishing the priority of each experiment was prepared by the OLO experimentation committee and is presented in Figure 6.3-8. The four primary criteria established for rating the experiments take into consideration man-related development research, new hardware development, systems operations research, and experimentation for developing and/or proving OLO procedures. The priority descends in that order. Experiments most heavily involved in developing man-related systems or operational procedures affecting crew safety, biomedical/behavioral aspects, or the operational capability, would receive a weighting factor rating of 3, 2 or 1 depending upon the particular subfactor with which it was most concerned. The man-related category is then further weighted by a multiplying factor of 4. The new hardware category includes subfactors denoting whether the experiment is most concerned with a full hardware system development, a major subsystem development, or minor subsystem development. This category is considered to be of less importance than the man-related category and is, therefore, weighted by a multiplying factor of 3. The systems operations subfactors distinguish between subsystem operation, utilization of hardware, and operational procedures development type experimental goals. The multiplying factor applied to the systems operating category was 2. The last category, OLO procedures, delineates procedural development experiments for utilization of man, man/machine interfaces, and training. This category is weighted by a multiplying factor of 1.

Objectives of each experiment were reviewed with respect to each of these categories and the highest weighting factor, in each category with which the objective can be associated, was applied to that experiment. The multiplying factors were applied and a priority value for each category was calculated. The sum of

DESCRIPTION - OLO EXPERIMENT FOR ORLs

EXP. NO. PT/AG-1

1. EXPERIMENT CATEGORY: Personnel Transfer/Artificial Gravity (PT/AG)

1.1 EXPERIMENT TITLE: Intravehicular Transfer - Rotating Station - (personnel)

2. JUSTIFICATION:

a. Feasibility of various operations in artificial gravity conditions has to be proven and techniques, procedures and supporting equipment developed. This will be required for any orbiting station if rotational artificial gravity is found to be necessary.

b. Earth simulations of rotational artificial gravity in a zero gravity environment has not been achieved, as yet.

c. Station configurations and methods of operation are highly dependent upon results of such experimentation. Long lead-times for station design and development requires early testing.

d. Requirements for orbital training must be determined or the adequacy of Earth-based training under simulated conditions verified.

3. SUMMARY DESCRIPTION:

Within the recommended configuration of the OLF, crewmen are required to commute between the facilities extremities and perform tasks at various positions within these areas, whether the operational mode of the station is rotational or non-rotational. This series of experiments is intended to first determine the feasibility of crew operations at various radii during the rotating mode of operation and second, develop the techniques, procedures and support equipment required for the crew to accomplish their assigned tasks. The accumulation of accurate and reliable results from this experimentation requires a close simulation of conditions expected in the OLF operations such as environment, time limitations, criticality of the situation and mode of operation. The results of these experiments may decidedly influence the OLF and future space station configurations and, more specifically, their operational modes, techniques and procedures.

EXP. NO. PT/AG-1

4. OPERATIONAL PROCEDURE:

This series of experiments should be performed by at least three crewmen, two experimental subjects and one observer. Tests should include transporting onself manually along a radial line toward, through and away from the center of rotation and performing basic task operations on experiment breadboards at various radial distances from rotational axis. These tests should include singular and dual crewmember activities. Normal and emergency situations should be simulated. Tests should be performed in shirtsleeve environment, partially pressurized "oxygen-mask/shirtsleeve" environment and depressurized environment with pressurized suits. Appropriate supporting devices should be tested such as foot or hand rungs, reeled tethers, support bars, etc. Other equipment required in the experiments include spacesuits, spare parts and repair kits; experiment breadboard, tools and harnesses; observation equipment, cameras, recorder, etc., and oxygen masks and carry-around bottles of O_2.

ORBIT REQUIREMENTS: No particular orbit requirements

EXPERIMENT MASS: 126 kg (280 lbm)

EXPERIMENT VOLUME: 0.62 m^3 (21.9 ft^3)

EXPERIMENT POWER: 350 Watts

EXPERIMENT DURATIONS: 8 days (5.0 hrs/day - odd days) (5.5 hrs/day even days)

NUMBER OF TIMES/FLIGHT: 4

EXPERIMENT MAN-HOURS/DAY: 15.0 man-hours/day - odd days;
16.5 man-hours/day - even days

TOTAL EXPERIMENT MAN-HOURS: 126.0 man-hours

5. EXPERIMENT IMPLEMENTATION:

- Required no later than 2nd quarter of 1970, desired 3rd quarter 1969.
- Requires artificial gravity, therefore AES is first system applicable.
- Requirements within AES capability.

6. EXPERIMENT SKETCH: See next page.

EXPERIMENT PT/AG-1

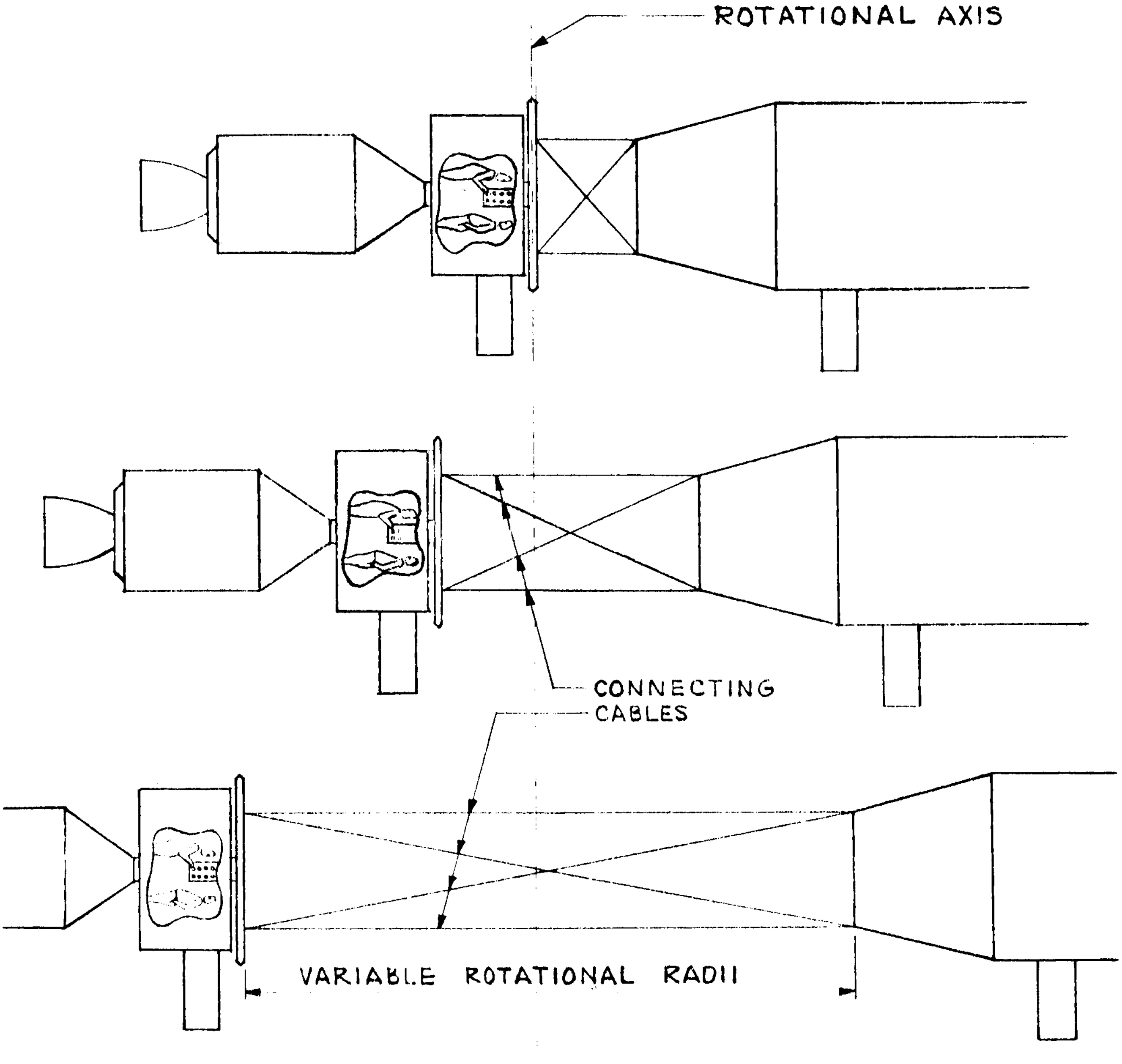

DESCRIPTION - OLO EXPERIMENT FOR ORLs

EXP. NO. PT/AG-2

1. EXPERIMENT CATEGORY: Personnel Transfer/Artificial Gravity (PT/AG)

1.1 EXPERIMENT TITLE: Extravehicular Transfer - Rotating Station - (personnel)

2. JUSTIFICATION:

a. Feasibility of various operations in artificial gravity conditions has to be proven and techniques, procedures and supporting equipment developed. This will be required for any orbiting station if rotational artificial gravity is found to be necessary.

b. Earth simulations of rotational artificial gravity in a zero gravity environment has not yet been achieved.

c. Requirements for orbital training must be determined or the adequacy of Earth-based training under simulated conditions proven.

d. Extravehicular transfer data can be used to supplement and verify data for intravehicular transfer where, in presently planned programs, a completely uninterrupted transversal of the artificial gravity gradients from one extremity of rotational radii to the other within the spacecraft is impossible.

e. Station configurations and methods of operation are highly dependent upon results of such experimentation. Long-lead times for station design and development requires early testing.

3. SUMMARY DESCRIPTION:

The possible rotational mode of OLF operation presents numerous additional requirements for and limitations on crew operations. Extravehicular crew inspection,maintenance and repair capability will probably be desirable, if not altogether necessary, for rotating stations operations. In all cases the basic capability of evacuating and possibly reentering a rotating station must be provided. These experiments are, therefore, intended to develop this capability and the necessary supporting equipment and are divided into three groups: (1) Personnel egress-rotating and unstabilized tumbling station; (2) Personnel ingress-rotating and unstabilized tumbling station; and (3) Basic external transfer operations - rotating station. Data from these experiments will be used in developing operational procedures training programs and supporting equipment and may decidedly influence the OLF and future space station configurations and modes of operation.

4. OPERATIONAL PROCEDURE:

These experiments should be performed by at least three spacesuited crewmen, two of which would be involved in the extravehicular activities and in making observations from the exterior. The other crewmember would direct the experiments from the spacecraft and observe and record experiment results, always remaining in a state of preparedness for emergency recovery of the other two crewmembers. The egress and ingress experiments would be primarily directed at developing techniques and procedures for exiting and entering the station and external tethering upon egress. Inasmuch as the artificial accelerations of an unstabilized rotating station will be similar to those of a stabilized rotating station, emergency evacuation and rescue under simulated emergency conditions should also be tested. The basic external transfer operations experiments should include transferring from one extreme of the rotational radii to the opposite extreme and return; external tethering for retaining the desired position on or around the rotating spacecraft; and performing typical breadboard maintenance tasks at various positions on the spacecraft and at different radial distances from the rotational axis. Equipment required in these experiments include spacesuits; spare parts and repair kits; breadboard maintenance experiment kits; transfer support equipment, tethers, cargo nets and harnesses; observation cameras, recorders, and biomonitoring equipment; and astronaut maneuvering units.

ORBIT REQUIREMENTS: Altitude 350 to 550 km, inclination 28° to 58°.

EXPERIMENT MASS: 305 kg (675 lbm)

EXPERIMENT VOLUME: 0.98 m^3 (34.7 ft^3)

EXPERIMENT POWER: 350 watts

EXPERIMENT DURATIONS: 3.75 hrs. each test - 2 tests/day - 4 days.

NUMBER OF TIMES/FLIGHT: 8 tests/flight

EXPERIMENT MAN-HOURS/DAY: 22.5 man-hours/day

TOTAL EXPERIMENT MAN-HOURS: 90 man-hours

5. EXPERIMENT IMPLEMENTATION:

- Required no later than 2nd quarter of 1970, desired 3rd quarter 1969.
- Requires artificial gravity, therefore, AES is first system applicable.
- Requirements within AES capability.

6. EXPERIMENT SKETCH: See next page.

EXPERIMENT PT/AG-2

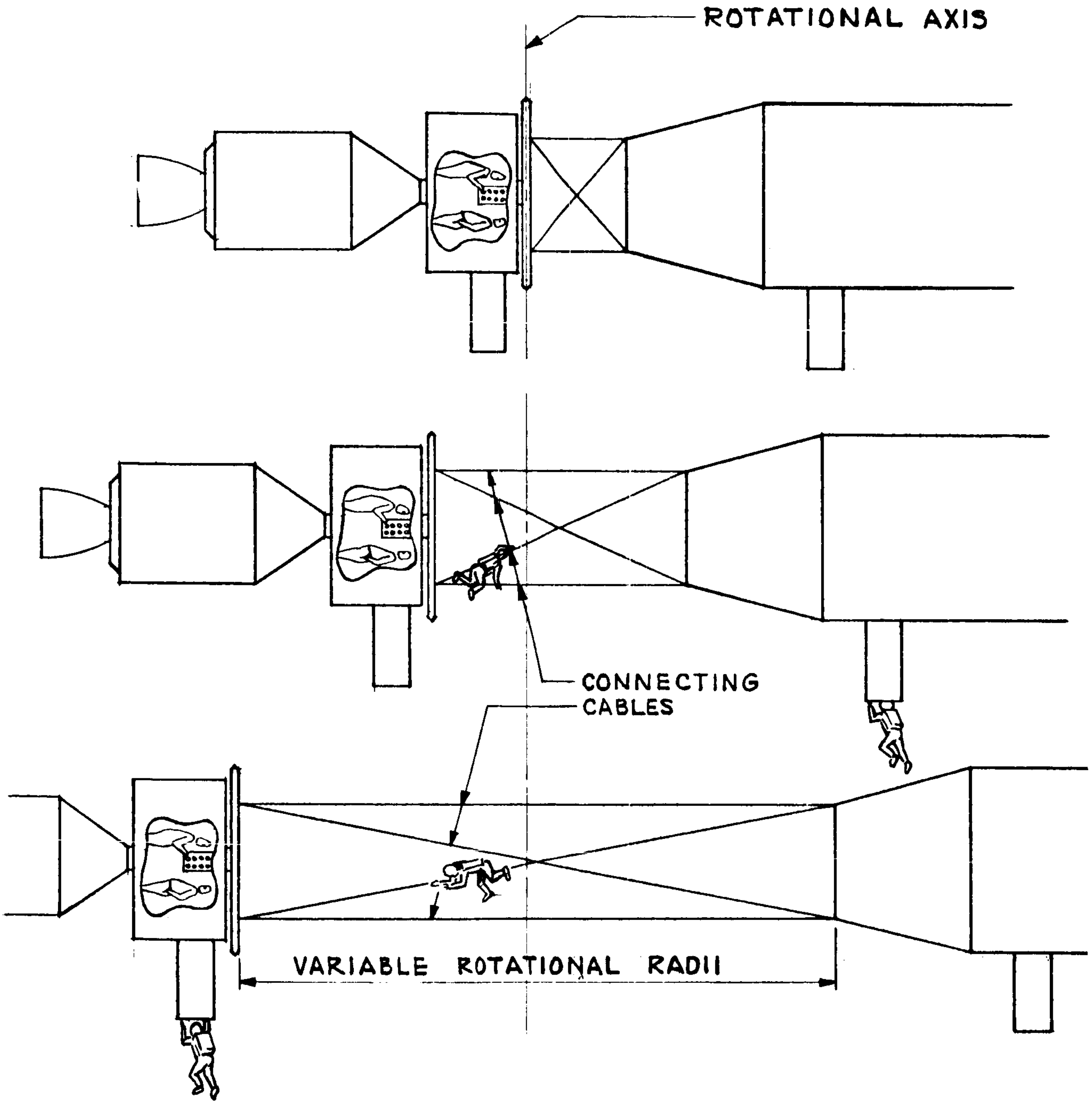

DESCRIPTION - OLO EXPERIMENT FOR ORLs

EXP. NO. CT/AG-1

1. EXPERIMENT CATEGORY: Cargo Transfer/Artificial Gravity (CT/AG)

1.1 EXPERIMENT TITLE: Extravehicular Transfer - Rotating Station

2. JUSTIFICATION:

a. Feasibility of various operations in artificial gravity conditions has to be proven and techniques, procedures and supporting equipment developed. This will be required for any orbiting station if rotational artificial gravity is found to be necessary.

b. Earth simulations of rotational artificial gravity in a zero gravity environment has not been achieved, as yet.

c. Equipment development lead times necessitate an early start in acquiring the information required in the basic OLF configuration and design programs.

d. Requirements for orbital training must be determined or the adequacy of earth-based training under simulated conditions proven.

3. SUMMARY DESCRIPTION:

The desirability, if not the necessity, of man to be capable of entering or exiting from a rotating station and performing minor exterior maintenance or emergency repair has to be considered if rotational artificial gravity is to be specified for future space station operations. In such activities the man will be required to take with him the necessary supplies, tools and equipment necessary to perform his tasks. This, he may be able to do manually or he may utilize mechanized devices. These experiments are, therefore, intended to test postulated techniques, procedures and equipment concepts for transferring solid or packaged masses between the interior and the exterior of a rotating station (including possibly immobilized personnel in rescue operations) and transporting these items to various positions on the outer surface or away from the station. The results of these tests will be used in developing operational procedures, training programs and supporting equipment and may significantly influence the OLF and future space stations configurations and modes of operation.

4. OPERATIONAL PROCEDURE:

These experiments will require at least three spacesuited crewmen, two men will participate in the extravehicular tests and the third will direct the experiments from within the spacecraft and remain in constant readiness to recover the test crew in an emergency. The experiments should include singular and duel effort in transporting the experimental mass packages from the interior to the exterior and from the egress hatch to various positions on the exterior of the spacecraft. Tetherlines and harnesses should be tested along with other possible transfer support devices. Mechanized conveyor systems should be tested, evaluating their adaptability and versatility in this type of operation. Emergency recovery of articles which may get away from the rotating vehicle should be investigated and recovery and retention techniques and procedures tested. Intentional separation of objects from the rotating system into preselected positions or trajectories for recovery at some later time may also be investigated. These various tests should be performed at various rotational radii and include transfers from one extreme of the rotational radii to the opposite extreme. Throughout the extravehicular cargo transfer operations experiments the effects of these activities on the station's attitude and stability should be monitored and the requirements for maintaining proper control should be established. Typical equipment required in these experiments include spacesuits; spare parts & repair kits; tethers, nets and harnesses; observation and data recording equipment and mechanized cargo transfer devices conveyor, etc.

ORBIT REQUIREMENTS: Altitude 350 to 550 km. Inclination 28° to 33°

EXPERIMENT MASS: 416 kg (920 lbm)

EXPERIMENT VOLUME: 1.11 m^3 (39.2 ft^3)

EXPERIMENT POWER: 550 w

EXPERIMENT DURATIONS: 3.5 hrs/test - 2 tests/day -- 6 days

NUMBER OF TIMES/FLIGHT: 12 tests/flight

EXPERIMENT MANHOURS/DAY: 21 man hours/day

TOTAL EXPERIMENT MANHOURS: 126 man hours

5. EXPERIMENT IMPLEMENTATION:

Could be accomplished in conjunction with Experiment No. PT/AG-2.

- Required no later than 2nd quarter of 1970, desired 3rd quarter 1969.
- Requires artificial gravity, therefore, AES is first system applicable.
- Requirements within AES capability

6. EXPERIMENT SKETCH: Sketch of PT/AG-2 is typical of this experiment also.

DESCRIPTION - OLO EXPERIMENT FOR ORLs

EXP. NO. CT/AG-2

1. EXPERIMENT CATEGORY: Cargo Transfer/Artificial Gravity (CT/AG)

1.1 EXPERIMENT TITLE: Intravehicular Transfer - Rotating Station

2. JUSTIFICATION:

a. Feasibility of various operations in artificial gravity conditions has to be proven and techniques, procedures and supporting equipment developed. This will be required for any orbiting station if the rotational artificial gravity is found to be necessary.

b. Earth simulations of rotational artificial gravity in a zero gravity environment have not been achieved, as yet.

c. Equipment development lead times necessitate an early start in acquiring the information required in the basic OLF configuration and design programs.

d. Requirements for orbital training must be determined or the adequacy of earth-based training under simulated conditions verified.

3. SUMMARY DESCRIPTION:

The possible rotational mode of OLF operation presents unusual conditions within the station, particularly with respect to maneuvering masses (cargo or personnel) from one position to another within the station or between the exterior and interior of the station. The purpose of this experiment or series of experiments is to first verify the principles of motions of masses in the rotational gravity field while in a zero gravity exterior environment, second to establish the operational and systems constraints imposed by this mode of operation for possible manual and mechanized methods of transferring cargo, and third to evaluate feasible methods and support equipment and make reasonable selections for incorporation in the OLF design and operations. The experimental results will be used in developing operational procedures, training programs and supporting equipment and may significantly effect the OLF design as well as that of future space stations.

EXP. NO. CT/AG-2

4. OPERATIONAL PROCEDURE:

These experiments should be performed preferably by three crewmen. Procedures for handling cargo derived from empirical data of earlier space experiments in zero gravity and from earth-based centrifuge tests, will be tested including manual and mechanized transfer of various volumes, shapes and masses within the spacecraft at various rotational radii. Mechanized systems would possibly include manipulator arms and various simple conveyor systems, such as clothesline and cargo net, tracks and carriages, etc. Manual cargo transfer should be accomplished in at least the shirtsleeve environment and in an unpressured environment with pressurized suits. Various harness and tether arrangements should also be tested and a total evaluation of procedures and equipment should be made. Throughout the intravehicular cargo transfer operations, the effects of these activities on the stations's attitude and stability should be monitored and the requirements for maintaining proper control should be established. In addition to the basic mechanized equipment stated above, other equipment required includes spacesuits; spare parts and repair kits; experiment packages of various masses, volumes, shapes; harnesses and tethers and observation & data recording equipment.

ORBIT REQUIREMENTS: No particular orbit requirements.

EXPERIMENT MASS: 213 kg (470 lbm)

EXPERIMENT VOLUME: 0.70 m^3 (24.6 ft^3)

EXPERIMENT POWER: 550 w

EXPERIMENT DURATIONS: 2 days (11 hrs. each day)

NUMBER OF TIMES/FLIGHT: 4

EXPERIMENT MANHOURS/DAY: 33 man hrs/day

TOTAL EXPERIMENT MANHOURS: 66 man hours

5. EXPERIMENT IMPLEMENTATION:

Could be accomplished in conjunction with Experiment No. PT/AG-1.

- Required no later than 2nd quarter of 1970, desired 3rd quarter of 1969.
- Requires artificial gravity, therefore, AES is first system applicable.
- Requirements within AES capability.

6. EXPERIMENT SKETCH:

Similar rotational arrangement as in PT/AG-1.

DESCRIPTION - OLO EXPERIMENT FOR ORLs

EXP. NO. CT/ZG-1

1. EXPERIMENT CATEGORY: Cargo Transfer/Zero Gravity (CT/ZG)

1.1 EXPERIMENT TITLE: Conveyor (or other mechanized) System - Zero Gravity

2. JUSTIFICATION:

a. Cargo or packaged mass transfer systems required to fulfill the OLF operational requirements will be significantly more sophisticated than those which might fulfill the requirements of presently planned programs up through MORL.

b. The evaluation of concepts which would adequately fulfill the OLF's operational requirements in support of the Manned Mars/Venus Flyby mission is a progressive step in developing the capability that will be required in the more ambitious missions and would most certainly be applicable to other concurrent earth orbital programs.

c. Zero gravity simulation for ground testing of sophisticated large mass handling systems does not presently appear feasible.

3. SUMMARY DESCRIPTION:

Although much of the basic operation of the OLF in regards to cargo transfer activities will not be too different than those of the MORL program, as presently planned, the sizes and masses of the equipment and cargo to be handled will probably differ appreciably. The intent of this series of experiments then is to assure that an adequate appraisal of various cargo handling systems in comparable "OLF-operational" situations is accomplished and that the concepts studies for possible use in early program applications are evaluated with OLF-type operational requirements as part of their evaluation criteria, at least from a growth standpoint. The results of these experimental evaluations could significantly influence the detailed design and operational modes of the OLF as well as other future space stations.

EXP. NO. CT/ZG-1

4. OPERATIONAL PROCEDURE:

These experiments would not only be concerned with actual cargo handling such as unloading and transporting cargo from the logistics spacecraft to the storage areas on board the OLF or MORL, but would primarily be directed at investigating various schemes of manipulating and transporting larger-mass equipment such as the cargo-module of the logistics spacecraft or the reentry module itself. One such experiment could simulate removing the cargo module from the reentry spacecraft using manipulator arms, stowing it to the side removing the reentry spacecraft from the docking port, attaching it to a track-mounted carriage, transporting it along the exterior of the test space vehicle and simulating the removal and restowage of the spacecraft in the maintenance hangar of the OLF. Although the basic systems can be adequately checked on Earth, the operational verification should be accomplished in a zero gravity field. This experiment's equipment requirements coincide quite closely with those of Experiment No. CT/AG-1, except for the added requirement of the logistics spacecraft and manipulator mechanisms. Two men could probably adequately perform this experiment.

ORBIT REQUIREMENTS: No particular orbit requirements

EXPERIMENT MASS: 207 kg (455#) does not include mass of logistics spacecraft & cargo

EXPERIMENT VOLUME: 0.46 m^3 (16.3 ft^3)

EXPERIMENT POWER: 700 w

EXPERIMENT DURATIONS: 3.5 hrs/test - 2 tests/day - 7.0 hrs. 4 days

NUMBER OF TIMES/FLIGHT: 8

EXPERIMENT MANHOURS/DAY: 14.0

TOTAL EXPERIMENT MANHOURS: 56.0

5. EXPERIMENT IMPLEMENTATION:

Could be accomplished in zero gravity condition, follow Experiment No. PT/AG-1

- Required no later than 1st quarter 1971, desired 2nd quarter 1970
- Requirements within AES capabilities
- Continuation of testing of larger systems on MORL.

6. EXPERIMENT SKETCH:

None

DESCRIPTION - OLO EXPERIMENT FOR ORLs

EXP. NO. CT/ZG-2

1. EXPERIMENT CATEGORY: Cargo Transfer/Zero Gravity (CT/ZG)

1.1 EXPERIMENT TITLE: Separation System - Spacecraft Modules

2. JUSTIFICATION:

a. The disjoining of modules or spacecraft and separation thereof in close proximity to other vehicles, equipment or personnel will require the development and testing of non-explosive separation systems and the techniques, procedures and systems necessary for moving the modules or vehicles about without damage to the other equipment.

b. The prime requirement for this type of experiment is the determination of acceptable operationsl procedures and support equipment and either the establishment of requirements for orbital training or verification of the adequacy of earth-based training in simulated environments.

3. SUMMARY DESCRIPTION:

The basic operations with which these experiments are concerned are not too different than those of Experiment No. CT/ZG-1 or even basic MORL logistics operations. The necessity does seem apparent, however, for specific experimentation for selecting separation systems, techniques and procedures, which can be used in operations such as OLO without producing hazardous conditions nor degrading the operational safety and probability of mission success. The results of these experiments would be applicable, in part, to the MORL logistics operation, but would be even more applicable to programs beyond MORL where numerous vehicles and pieces of equipment are involved in repeated dockings, separations, disassembly and reassembly operations.

EXP. NO. CT/ZG-2

4. OPERATIONAL PROCEDURE:

The experimentation required in this area is only generally described because of the diversity of equipment and experimental operations that may be required. However, much of the experimentation of Experiment No. CT/ZG-1 will probably be applicable or supplemental to these experiments. These tests should be formulated for developing and proof testing reusable joining and separation systems that will not release hazardous debris into the adjacent environment. Techniques and operational procedures should be developed and tested for manual and remote controlled disjoining and separation of systems. Vehicles of various mass, shape and volume should be used in these tests, including Apollo spacecraft, logistics cargo modules, possibly Gemini spacecraft and adapter and Agena or even S-IVB stages. Other equipment required would include small strap-on propulsion units; AMU's, RMU's, manipulator systems; spacesuits and tethers and test observation and data recording equipment. Each of the various possible modes of disjoining, separation maneuvering and rejoining should be tested and should require no more than three or four men to accomplish these tests.

ORBIT REQUIREMENTS: No particular orbit requirements

EXPERIMENT MASS: 663 kg (1460#) Exclusive of spacecraft and booster stages masses.

EXPERIMENT VOLUME: 1.01 m^3 (35.6 ft^3)-Exclusive of spacecraft & booster stages volumes.

EXPERIMENT POWER: Undefined

EXPERIMENT DURATIONS: Undefined

NUMBER OF TIMES/FLIGHT: Undefined

EXPERIMENT MANHOURS/DAY: Undefined

TOTAL EXPERIMENT MANHOURS: Est. 400 manhours

5. EXPERIMENT IMPLEMENTATION:

- Required no later than 1st quarter of 1970, desired 3rd quarter of 1968.
- Initial testing could be performed on Apollo orbital mission
- Requirements within AES capabilities

6. EXPERIMENT SKETCH:

None

DESCRIPTION - OLO EXPERIMENT FOR ORLs

EXP. NO. EA-1

1. EXPERIMENT CATEGORY: Erection & Assembly (EA)

1.1 EXPERIMENT TITLE: Vacuum Welding Techniques

2. JUSTIFICATION:

a. The evaluation and selection of methods, techniques, procedures, and equipment concepts for various orbital erection and assembly operations will significantly influence the design detail of future large space systems and perhaps dictate their basic configuration design. The experimentation required to accomplish these evaluations and selections should, therefore, be performed at an early date in our space program if the more ambitious manned missions are to be accomplished within the 1970's and 1980's.

b. Unless considerably large orbital payload delivery capability is achieved beyond that of the Saturn V, orbital assembly will most certainly be required for many advanced space missions. This will necessitate developing acceptable means of joining structures of various kinds in orbit. Welding, presently, is one of our primary joining methods and should, therefore, be tested for possible orbital utilization.

3. SUMMARY DESCRIPTION:

One of the fundamental assembly processes, which will undoubtedly be required in large space structures where positive sealing is required, is structural welding. It is conceivable, also, that a large amount of this structural welding will have to be, or can most economically be, done in the natural vacuum environment of orbital space. Vacuum welding of relatively large structures which can then be pressurized for long-term space usage is of particular interest for Orbital Launch Facility applications and for Orbital Launch Operations applications in general. The purpose of this experiment, then, is to extend the investigations of "Extravehicular Welding ..," as proposed in Douglas OSSS Experiment No. 7, to the verification of large structural welds, to the testing of projection-resistence welding and electron beam welding and the development of operational techniques, procedures and support equipment. The applicability and necessity of this data in the design and development of other future space systems requiring orbital assembly or repair is obvious.

EXP. NO. EA-1

4. OPERATIONAL PROCEDURE:

This experiment could probably best be performed by three men, two in the extravehicular experimental work and one remaining in the spacecraft, directing the experiment, assisting as required and observing. Various sizes of welded pressurizable specimens should be prepared in the external environment. Each specimen should be pressurized and leakage monitored during an extended preiod of time (at least 6 mos.). The smaller specimens should then be returned to earth for analysis and strength testing. The larger specimens could be left in orbit for more extended observation in the space environment. Similar operations should be performed in earth-based space simulators for control observation and analysis. The shapes and sizes of test specimens should be designed to give adequate representation of anticipated future welding requirements. Larger specimens may be adequately provided using circumferential rings in the interstage sections of the booster upper stages or of the spacecraft itself as shown in the attached sketch. Comparisons of various welding processes may be necessary if previous comparative evaluation and selection has not been accomplished. The equipment required would include spacesuits, spare parts and repair kits, tethers and harnesses, various shapes and sizes of specimens to be welded, pressurants, and welding equipment, maneuvering units for astronaut and observation and recording equipment.

ORBIT REQUIREMENTS: No particular orbit requirements

EXPERIMENT MASS: 530 kg (1170 lbm)

EXPERIMENT VOLUME: 1.25 m^3 (43.8 ft^3)

EXPERIMENT POWER: 1500 w peak

EXPERIMENT DURATIONS: 9 hrs. (3 hrs/day for 3 days) - (pressure monitoring 6-12 mos)

NUMBER OF TIMES/FLIGHT: 1

EXPERIMENT MANHOURS/DAY: 9 man hrs/day

TOTAL EXPERIMENT MANHOURS: 27 man hours plus periodic pressure monitoring.

5. EXPERIMENT IMPLEMENTATION:

- Required no later than 2nd quarter 1970, therefore, should be started no later than 3rd quarter or even 2nd quarter of 1969. Should take advantage of earlier experiments.
- Requirements within AES capability.

6. EXPERIMENT SKETCH:

See next page.

EXPERIMENT EA-1

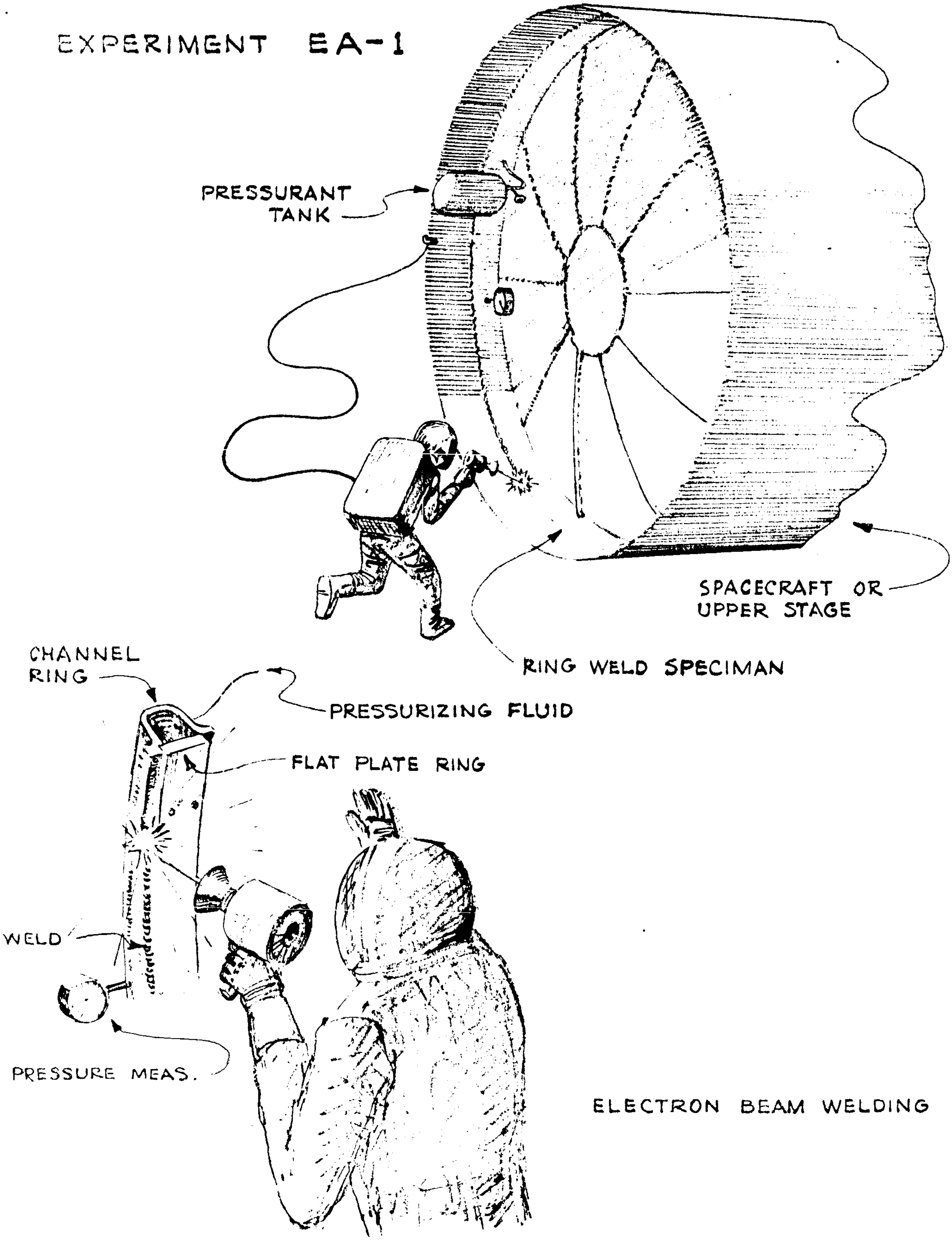

DESCRIPTION - OLO EXPERIMENT FOR ORLs

EXP. NO. EA-2

1. EXPERIMENT CATEGORY: Erection & Assembly (EA)

1.1 EXPERIMENT TITLE: Extendable Umbilical Tower

2. JUSTIFICATION:

a. The evaluation and selection of methods, techniques, procedures and equipment concepts for various orbital erection and assembly operations will significantly influence the design detail of future large space systems and perhaps dictate their basic configuration design. The experimentation required to accomplish these evaluations and selections should, therefore, be performed at an early date in our space program, if the more ambitious manned missions are to be accomplished within the 1970's and 1980's.

b. Extendable structures offer innumerable applications in space systems that must be compactly packaged for earth launch, but require expanded capability in orbit. The feasibility and workability in the space environment must be proven and their limitations determined.

3. SUMMARY DESCRIPTION:

One of the means of providing positive position and deployment control for long flexible cables and conduits is by their attachment to or incorporation in extendable structures. The economic usefulness and reliability of such structures throughout missions of extended duration depends upon their ability to withstand the space environment. The intent of this experiment is to proof test a folding structure design, which could be used in space systems umbilical tower applications. In the OLF conceptual design, the umbilical tower facilitates servicing the Orbital Launch Vehicle (OLV) with water, helium, liquid oxygen, storable propellants (UDMH & N_2O_4), liquid nitrogen along with auxiliary electrical power. The results of these experiments will be applicable to various other similar systems such as the remote mainpulator mechanisms, cargo conveyor systems, etc.

4. OPERATIONAL PROCEDURE:

This experiment could be adequately performed with a scaled down umbilical tower and with a crew of two men. The stability effects on the spacecraft should be monitored during the extension and retraction of the tower. Periodic operation of the tower during a period of 6 months to a year, or longer, with pressure tests on umbilical lines, following each extension and umbilical coupling, would test the operability and survivability of the systems in the space environment. Particular problems may be encountered in cold welding of precision machined swivel and hinged joints in the high vacuum environment. A target umbilical connection plate could be varied in position with respect to the spacecraft to test the versatility of the towers deployment and position control and to develop operational techniques and procedures for accomplishing these operations. Both manual and automatic coupling and decoupling of the umbilical connections should be tested. The experiments would require a scaled umbilical tower, an adjustable target boom, spacesuits, spare parts and repair kits, AMU, tether line and harness, pressurants and observation and recording equipment.

ORBIT REQUIREMENTS: No particular orbit requirements

EXPERIMENT MASS: 547 kg (1,205 lb)

EXPERIMENT VOLUME: 1.45 m^3 (51.3 ft^3)

EXPERIMENT POWER: 900 w peak

EXPERIMENT DURATIONS: 5.0 hrs/day for 3 days initially

NUMBER OF TIMES/FLIGHT: 6 tests - 1st 3 days; 1 test/wk - 1st mo.
1 test/mo. - next 11 months

EXPERIMENT MANHOURS/DAY: 10 man hours/day - initial tests

TOTAL EXPERIMENT MANHOURS: 30 man hours - initial tests (50 man hours/yr.)

5. EXPERIMENT IMPLEMENTATION:

- Required no later than 3rd quarter of 1970, therefore, should be started no later than 4th quarter 1969. Could be started 2nd quarter 1969.
- Requirements within AES capability.

6. EXPERIMENT SKETCH:

See next page.

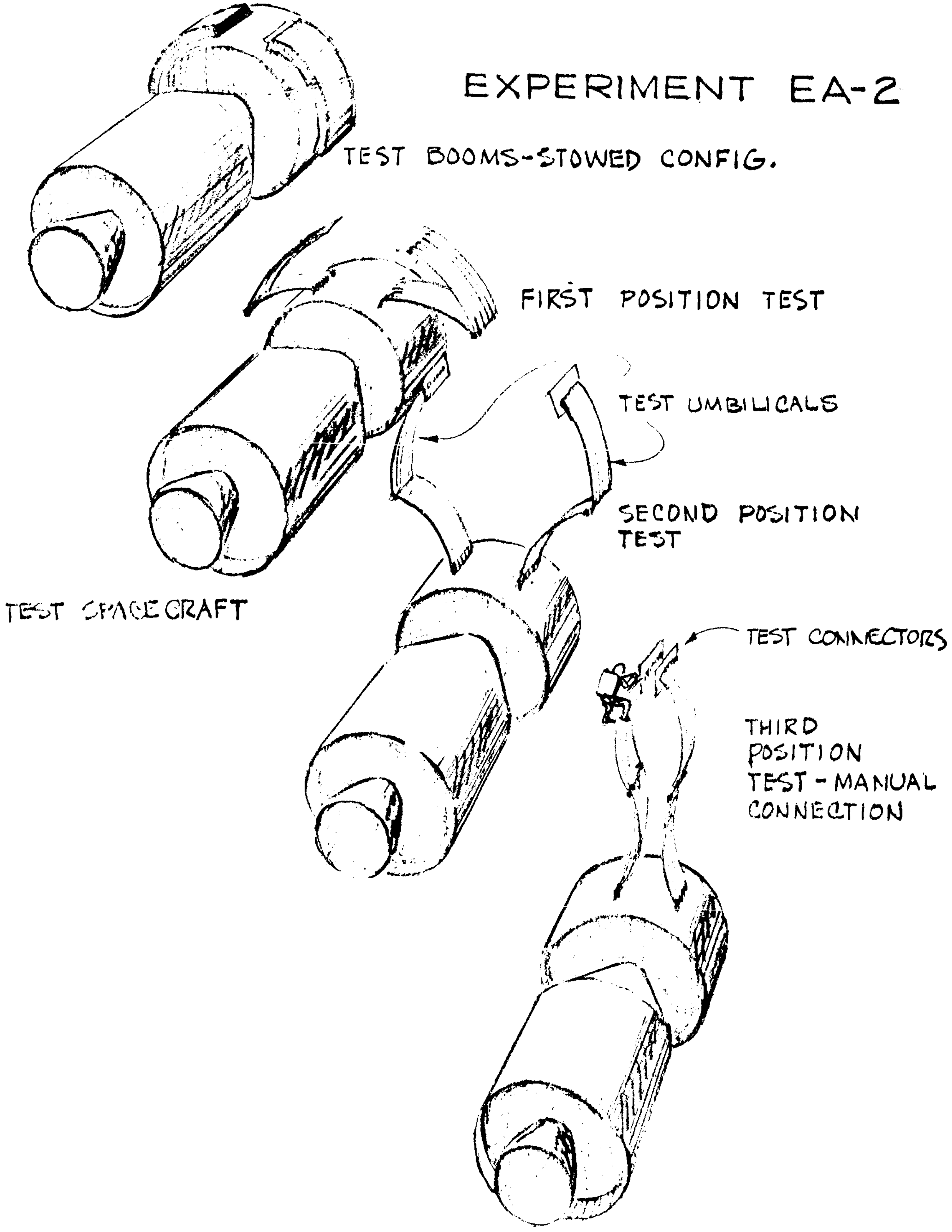
EXPERIMENT EA-2
TEST BOOMS-STOWED CONFIG.
FIRST POSITION TEST
TEST UMBILICALS
SECOND POSITION TEST
TEST SPACECRAFT
TEST CONNECTORS
THIRD POSITION TEST - MANUAL CONNECTION

DESCRIPTION - OLO EXPERIMENT FOR ORLs

EXP. NO. EA-3

1. EXPERIMENT CATEGORY: Erection & Assembly (EA)

1.1 EXPERIMENT TITLE: Extendable Structure Operations

2. JUSTIFICATION:

a. The evaluations and selection of methods, techniques, procedures and equipment concepts for various orbital erection and assembly operations will significantly influence the design detail of future large space systems and perhaps dictate their basic configuration design. The experimentation required to accomplish these evaluations and selections should, therefore, be performed at an early date in the space program if the more ambitious manned missions are to be accomplished within the 1970's and 1980's.

b. Extendable structures offer innumerable applications in space systems that must be compactly packaged for earth launch, but require expanded capability in orbit. The feasibility and workability in space environment must be proven and their limitations determined. Could minimize the number of earth launches required to put large systems into orbit.

3. SUMMARY DESCRIPTION:

The use of extendable structures in large space systems appears to be particularly desirable from the standpoint of reducing earth launch systems payload volume. The sheer size, particularly in length, or various large space station concepts being considered, presents real problems in payload packaging for earth launch, such that the launch vehicle total length doesn't exceed the design limits. This appears to be more of a problem than payload weight. This experiment then is intended to test one concept of compact packaging intended for the OLF in its recommended configuration. This concept involves telescoped structures that must be extended and sealed in orbit. This concept could be applicable for innumerable other applications, therefore, the experimental results would probably be used extensively.

EXP. NO. EA-3

4. OPERATIONAL PROCEDURE:

The basic concept of telescoping one module inside another for compact packaging for earth launch and where added volume is desired in orbit, such as incorporated in one of the recommended OLF designs, can be proven in some of the early programs as follows. Two experiment modules can be designed with telescoping cylindrical sections as shown in the attached sketch. Upon arrival in orbit these modules could be extended to their full volume either with gas pressure and/or mechanical means. After being fully extended, various means of providing a seal can be tested. Mechanical sealing rings, which can be bolted and torqued into place, should be tested. These joints would allow easy disassembly if desired at some future date (possibly for expansion-adding extension pieces). The final joining would be by welding and in all cases extended pressurization of the captured volume would be necessary to test the seal. Pressurization and leakage monitoring for each method of sealing for about one month should be sufficient. Two men would be used in the experiment for initiating the extension of the modules, for joining the extended modules and for monitoring leakage. Equipment needed besides the telescoping modules themselves would include spacesuit; spare parts and repair kit; tethers and harnesses, basic tool kit welding kit, pressurants and leak detection instrumentation and observation and recording equipment.

ORBIT REQUIREMENTS: No particular orbit requirements

EXPERIMENT MASS: 127 kg (280 lbm) not including telecopable modules.

EXPERIMENT VOLUME: 0.37 m^3 (13.05 ft^3)

EXPERIMENT POWER: 1000 w peak.

EXPERIMENT DURATIONS: 2 months (not continuous)

NUMBER OF TIMES/FLIGHT: Periodic checks 60/flight (once/day)

EXPERIMENT MANHOURS/DAY: Inspection 0.7 man hours/day. Joining 5 man hours/2 times

TOTAL EXPERIMENT MANHOURS: 52.0 man hours.

5. EXPERIMENT IMPLEMENTATION:

- Required no later than 4th quarter of 1969, should therefore start no later than 3rd quarter of 1969 and could start 1st quarter of 1969.
- Requirements within AES capabilities

6. EXPERIMENT SKETCH:

See next page

EXPERIMENT EA-3

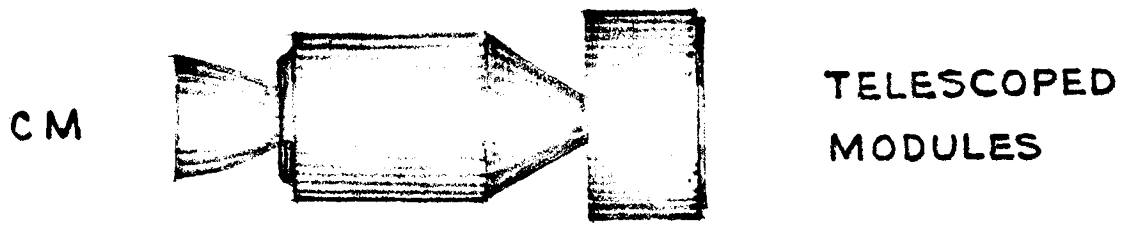

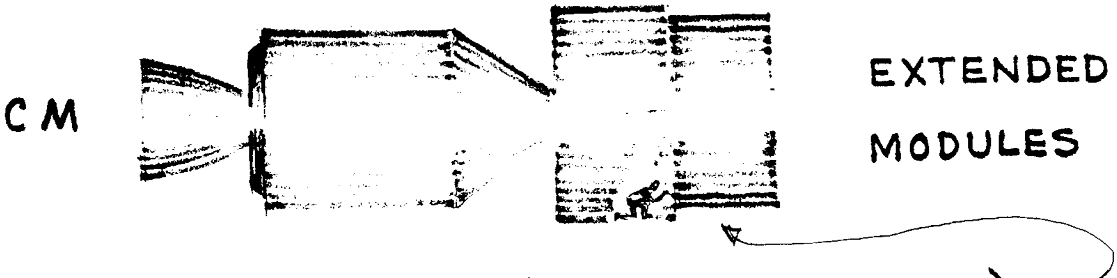

CREWMAN MAKING SEALED JOINT (MECHANICAL OR WELD)

DESCRIPTION - OLO EXPERIMENT FOR ORLs

EXP. NO. EA-4

1. EXPERIMENT CATEGORY: Erection & Assembly (EA)

1.1 EXPERIMENT TITLE: Internal Structural Assembly Procedures

2. JUSTIFICATION:

a. The evaluation and selection of methods, techniques, procedures and equipment concepts for various orbital erection and assembly operations will significantly influence the design detail of future large space stations and prehaps dictate their basic configuration design. The experimentation required to accomplish these evaluations and selections should, therefore, be performed at an early date in the space program if the more ambitious manned missions are to be accomplshed within the 1970's and 1980's.

b. Added assembly and disassembly experience will provide increasing maintenance and repair capability which can enhance the overall probability of mission success.

3. SUMMARY DESCRIPTION:

Many of the assembly operations required in the larger space stations and quite typically in the OLF will require extensive manual operations. At the present time, it is assumed that man will be able to accomplish these tasks. Basic operational capabilities of man will be proven or determined in planned orbital experiment programs. However, procedures for handling and assembling larger and more complicated structural systems must be developed. This experiment is intended to develop those procedures and to provide verification of crew training techniques and procedures. The applicability of these experimental results are general for future large space stations and exploration vehicles.

4. OPERATIONAL PROCEDURE:

This experiment should be performed by at least three men, two experimental subjects and one director and observer. The basic experiment includes some of the operations to be accomplished in Experiment No. EA-3 (i. e. making the mechanical or welded sealing joint) and should probably be performed in conjunction with that experiment. This experiment would include two men working together as a team assembling and disassembling various larger pieces of structure within the experimental volume of an extended experiment lab such as that of Experiment No. EA-3. The assembly operations would test basic procedures established by Earth simulations and verify the adequacy or inadequacy of the Earth-based training procedures. A typical structural build-up is shown in the attached sketch. These experiments should be performed in a shirtsleeve environment, in a partially pressurized "shirtsleeve/oxygen mask" environment and in a depressurized environment, using spacesuits. Equipment required would include basic tool kit, structural members and fasteners, welding equipment, specesuits, oxygen masks and observation and recording equipment.

ORBIT REQUIREMENTS: No particular orbit requirement

EXPERIMENT MASS: 417 kg (920 lbm)

EXPERIMENT VOLUME: 0.59 m^3 (20.7 ft^3)

EXPERIMENT POWER: 1000 w. peak

EXPERIMENT DURATIONS: 6 days. (1 test/day)

NUMBER OF TIMES/FLIGHT: 6 tests/flight

EXPERIMENT MANHOURS/DAY: 16.5 man hours/day

TOTAL EXPERIMENT MANHOURS: 99.0 man hours

5. EXPERIMENT IMPLEMENTATION:

Could be accomplished in conjunction with EA-3.

- Required no later than 2nd quarter of 1970, desirable about 1st quarter of 1969.
- Requirements within AES capabilities

6. EXPERIMENT SKETCH:

See next page.

EXPERIMENT EA-4

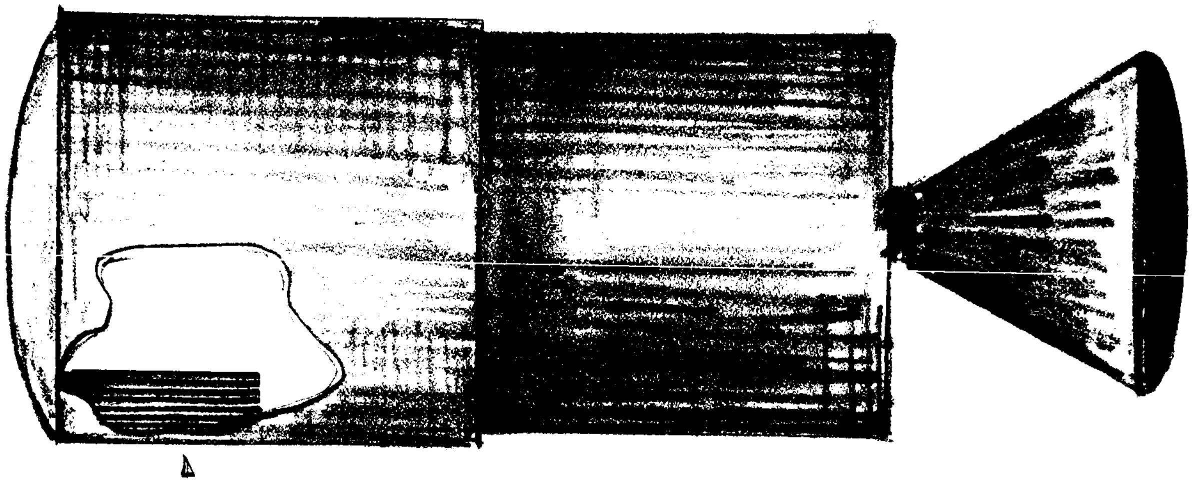

STOWED STRUCTURAL MEMBERS & FASTENERS

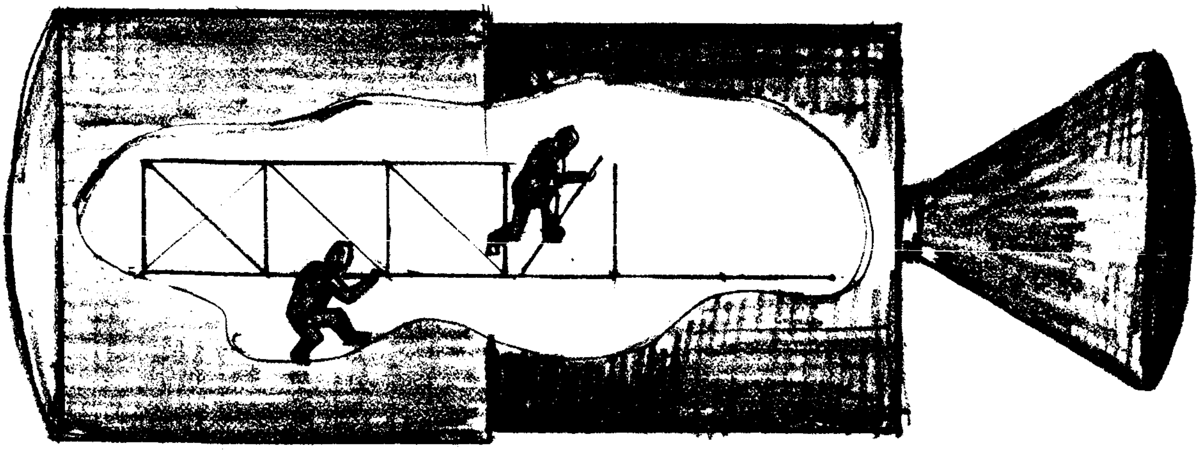

ASSEMBLED BULKHEAD & CONVEYER STRUCTURE – (TYPICAL)

DESCRIPTION - OLO EXPERIMENT FOR ORLs

EXP. NO. EA-5

1. EXPERIMENT CATEGORY: Erection and Assembly (EA)

1.1 EXPERIMENT TITLE: Removal, Transfer & Installation of Passive Structure

2. JUSTIFICATION:

a. The evaluation and selection of methods, techniques, procedures and equipment concepts for various orbital erection and assembly operations will significantly influence the design detail of future large space systems and perhaps dictate their basic configuration design. The experimentation required to accomplish these evaluations and selections should, therefore, be performed at an early date in the space program if the more ambitious manned missions are to be accomplished within the 1970's and 1980's.

b. Added capability in disassembly, handling and assembly of large structures in orbit increases the maintenance and repair capability which thereby enhances the overall probability of mission success.

3. SUMMARY DESCRIPTION:

The requirement for increased capability for handling larger equipment and structures in orbit become most apparent as larger space stations and exploration vehicles are contemplated. The probability of aborting a mission because of major structural damage could probably be decreased if this added capability were achieved. The routine operations of the OLF could involve some manual handling of large structure in the extravehicular environment. This experiment is, therefore, intended to test various methods of accomplishing these tasks and develop the techniques, procedures and supporting equipment as required. The applicability of these test data to future large space systems has already been suggested.

EXP. NO. EA-5

4. OPERATIONAL PROCEDURE:

The initial tests in this type of experiment could possibly be performed by three men. Later experimentation may be desirable for testing team operation using more than two men in the actual extravehicular activity. The tests should be performed using disassembled structural components stored in the interstage area of a spacecraft. The components would be removed from stowage, assembled into a reasonably large piece of structure, transported by the crew members via AMUs or by RMUs to a distance of 150 to 200 feet from the spacecraft and return; mate with an adapter on the spacecraft, disassemble and return components to storage in interstage skirt area. Various methods of handling and transporting the test structure would be tested to select the best method and techniques and procedures would be tried to determine their applicability and to verify the adequacy of Earth-based training for such operations. The equipment that would be required would include test structure components and spacecraft adapter, spacesuits, basic tools, AMUs RMUs, observation and data recording equipment and tethers and harnesses.

ORBIT REQUIREMENTS: No particular orbit requirements

EXPERIMENT MASS: 435 kg (960 lbm)

EXPERIMENT VOLUME: 1.17 m^3 (41.4 ft^3)

EXPERIMENT POWER: 350 w

EXPERIMENT DURATIONS: 5 days (2 test/day)

NUMBER OF TIMES/FLIGHT: 10 tests/flight

EXPERIMENT MANHOURS/DAY: 16.8 man hours/day

TOTAL EXPERIMENT MANHOURS: 84.0 man hours

5. EXPERIMENT IMPLEMENTATION:

- Required no later than 1st quarter of 1972, desirable earlier.
- Requirements within AES and Apollo capabilities.
- Could possibly be performed initially on Apollo in 1st quarter of 1968.

6. EXPERIMENT SKETCH:

See next page

EXPERIMENT EA-5

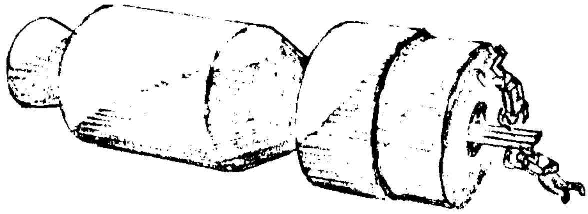

TEST STRUCTURE REMOVAL

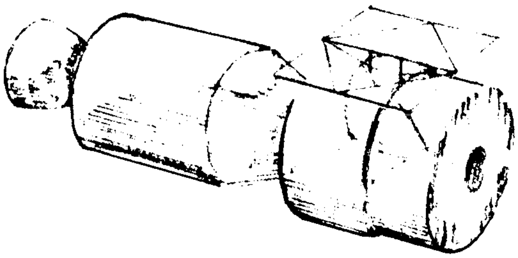

ASSEMBLY OF TEST STRUCTURE

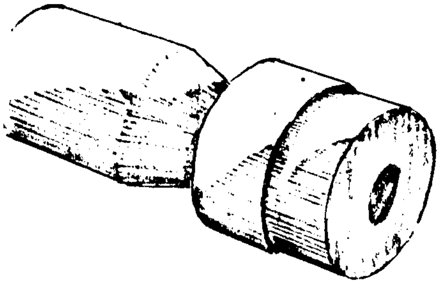

TEST STRUCTURE TRANSFERRED (AMU RMU)

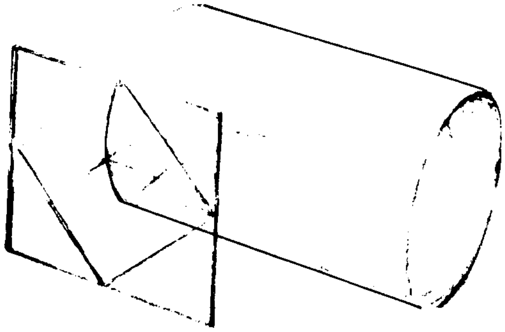

TEST STRUCTURE RETURNED, MATED TO SPACECRAFT, DISASSEMBLED & STOWED

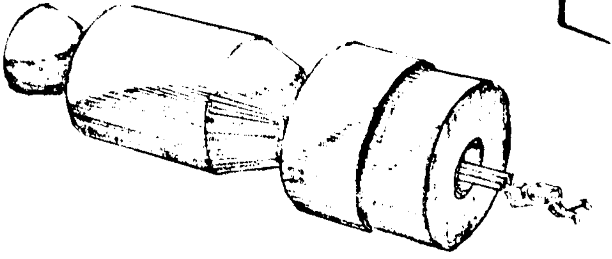

DESCRIPTION - OLO EXPERIMENT FOR ORLs

EXP. NO. EA-7

1. EXPERIMENT CATEGORY: Erection and Assembly (EA)

1.1 EXPERIMENT TITLE: OLF Stabilization w/scaled OLO Hardware

2. JUSTIFICATION:

a. The evaluation and selection of methods, techniques, procedures and equipment concepts for various orbital erection and assembly operations will significantly influence the design detail of future large space systems and perhaps dictate their basic configuration design and operational mode. The experimentation required to accomplish these evaluations and selections should, therefore, be performed at an early date in the space program if the more ambitious manned missions are to be accomplished within the 1970's and 1980's.

b. The OLO operation as proposed provides the means of keeping all orbiting components in close proximity, but the orbit keeping operations are thereby complicated. Verification of the feasibility of the proposed mode of operation is essential.

3. SUMMARY DESCRIPTION:

One operational mode proposed for orbital launch operations is as shown in the attached Sketch #1. The variety of configurations that the total orbiting complex goes through in building up to the orbital launch imposes quite a wide range of orbit-keeping requirements upon the basic facility, the OLF. The purpose of these experiments is to prove the feasibility of the OLF's maintaining the stability required during OLO and correcting for orbital changes as may be necessary. Data from these experiments will provide added information and confidence in designing for future systems of even greater complexity.

4. OPERATIONAL PROCEDURE:

This series of experiments would require at least three men, two men handling the extravehicular activities and one man directing the experiment and remotely controlling the experiment from the spacecraft. The OLO hardware (OLF, Tankers, OLV spacecraft & booster, logistics vehicle and Apollo Command Modules) would be scaled to approximately one-tenth size dimensionally and one-thousandth the mass. The hardware configuration need only to simulate the mass distributions; therefore, detailed expensive models would not be necessary. The OLF would house the electronic equipment attitude sensors, reaction control (compressed gas) system, etc. The various OLO configurations (10) would be simulated by manually adding or removing hardware components. Tests would be performed remotely with each configuration to determine the systems ability to maintain the attitude to make attitude changes and to make simulated orbital corrections. The equipment required for this experiment would include OLO simulated hardware (scaled), remote control and monitoring equipment, spacesuits, tethers, basic tools for model assembly, AMUs and observation and recording equipment.

ORBIT REQUIREMENTS: No particular orbit requirements

EXPERIMENT MASS: 794 kg (1754 lbm)

EXPERIMENT VOLUME: 5.28 m^3 (187 ft^3)

EXPERIMENT POWER: 600 w.

EXPERIMENT DURATIONS: 6 days (7.5 hrs/day)

NUMBER OF TIMES/FLIGHT: 3 tests/flight

EXPERIMENT MANHOURS/DAY: 22.5 man hours/day

TOTAL EXPERIMENT MANHOURS: 135.0 man hours

5. EXPERIMENT IMPLEMENTATION:

- Required no later than 2nd quarter of 1970, desirable about 2nd quarter of 1969.
- Requirements within AES capabilities.

6. EXPERIMENT SKETCH:

See next two pages.

1. OLF LAUNCH, ASSEMBLY & CHECKOUT
2. OLV SPACECRAFT LAUNCH, DOCKING & CHECKOUT
3. 1ST LOGISTICS S/C LAUNCH, DOCK & TRANSFER OF PERSONNEL & CARGO
4. 1ST LOX TANKER LAUNCH, DOCKING & CHECKOUT
5. 2ND LOX TANKER LAUNCH, DOCKING & CHECKOUT
6. 3RD LOX TANKER LAUNCH, DOCKING & CHECKOUT
7. 4TH LOX TANKER LAUNCH, DOCKING & CHECKOUT
8. LOGISTICS SPACECRAFT LAUNCH, DOCKING & TRANSFER OF OLV CREW & CARGO
9. OLV - S-II-B LAUNCH, DOCKING & CHECKOUT
10. SEPARATION OF OLF FROM OLV AND ORBITAL LAUNCH OF OLV.

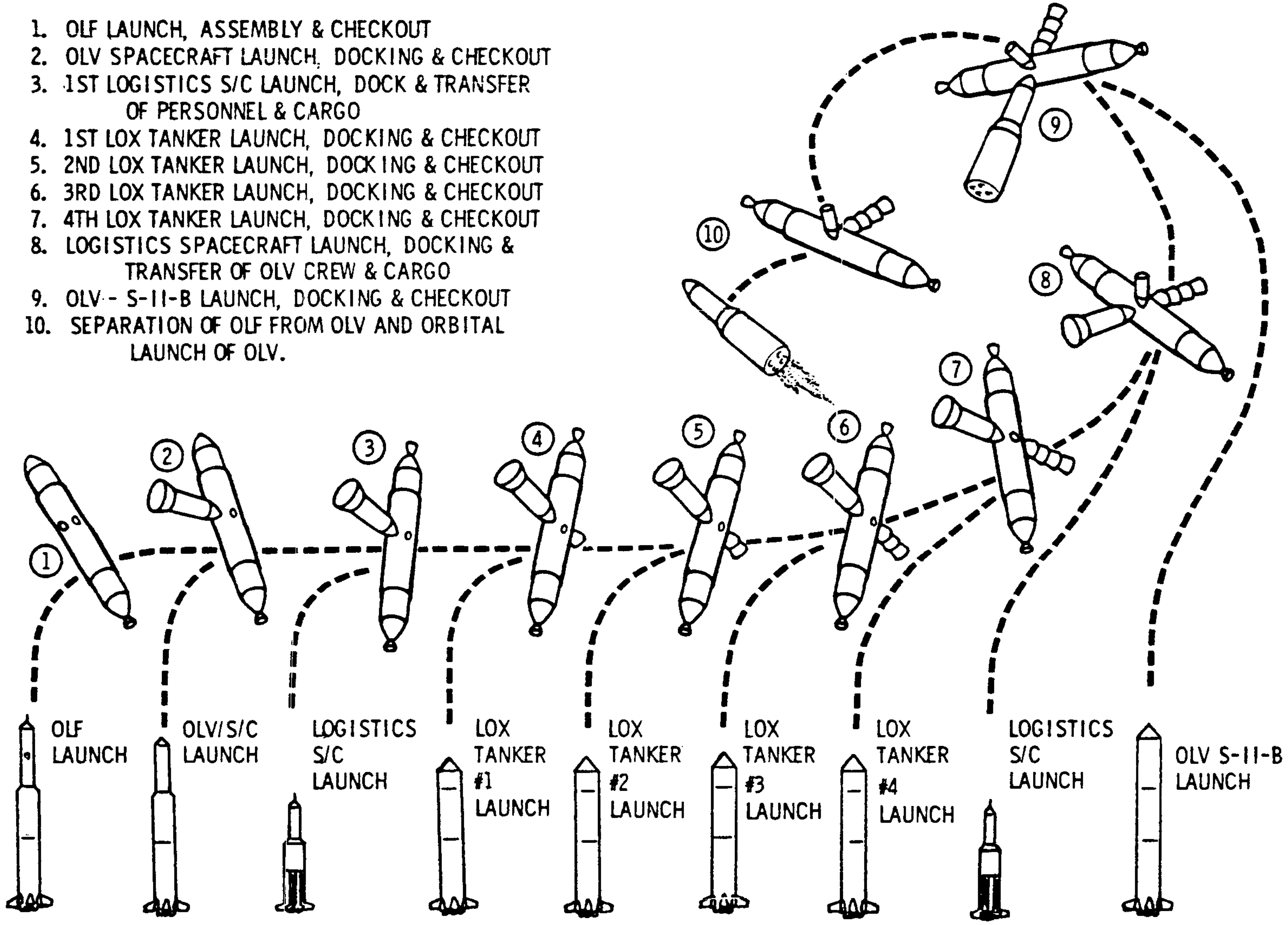

EXPERIMENT EA-7 -- SKETCH NO. 1

EXPERIMENT EA-7

ORBITAL LAUNCH FACILITY
WITH OLV & LOX TANKERS
APOLLOS DOCKED EACH END

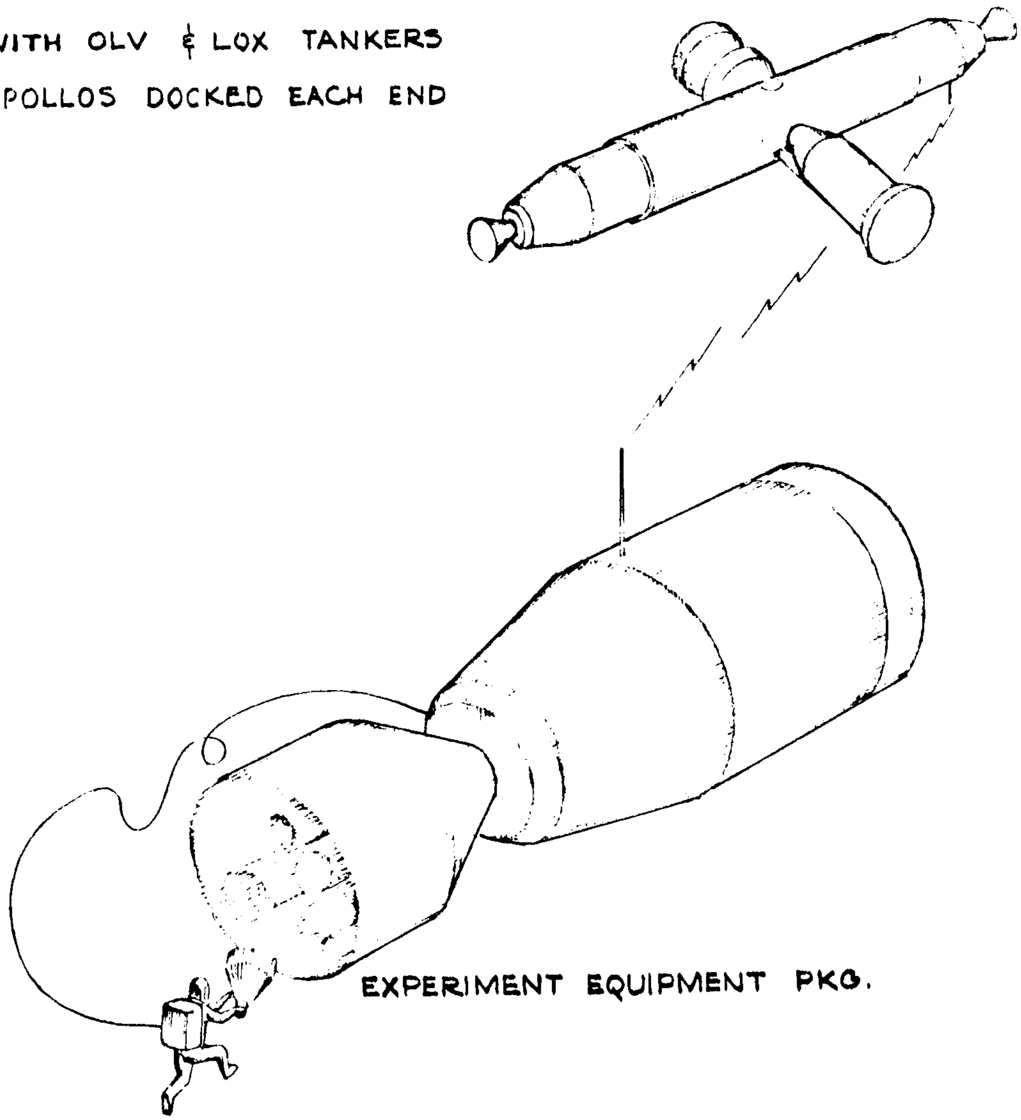

EXPERIMENT EQUIPMENT PKG.

NOTE: TEST HARDWARE CONFIGURATION NEED SIMULATE ONLY MASS DISTRIBUTION OF ACTUAL HARDWARE UNITS

DESCRIPTION - OLO EXPERIMENT FOR ORLs

EXP. NO. EA-10

1. EXPERIMENT CATEGORY: Erection & Assembly (EA)

1.1 EXPERIMENT TITLE: Space Vehicle Static Electricity Potential

2. JUSTIFICATION:

a. Learning what man can't do in space is every bit as important as learning what he can do. It is imperative that the hazards of various planned activities be identified as soon as possible and means of skirting these hazards or protecting against them developed.

b. Electrical discharge possibilities between pieces of orbiting hardware as they are brought into close proximity for work or assembly can be extremely dangerous if an appreciable charge does accumulate. Experimental data are necessary to either provide confidence that no real hazard exists or to provide some basis for designing systems and operations to cope with this possible hazard.

3. SUMMARY DESCRIPTION:

Early Gemini experimentation is intended to initially investigate electrical static charge build-up on the orbiting spacecraft. If that experimentation provides some assurety that little or no hazard exists then only minor periodic checks may have to be performed in vehicles of larger proportions that are orbited for extended periods of time. However, if the Gemini experimentation does reveal a potential danger then various experiments may be required to determine the extent of the hazard and to develop operational procedures and assembly modes, which will minimize the hazard. These experiments are intended to accomplish these objectives if required. Application to future systems is obvious.

4. OPERATIONAL PROCEDURE:

These experiments could be performed by two men from an orbiting lab. Some use could possibly be made of spent upper stages such as Agena, Titan II 2nd stage and S-IV-B, giving variations in total exposed surface area. Smaller unmanned satellities could also be utilized in such experimentation. In all cases, the surface potential of the test piece of equipment would be measured on the Earth's surface just prior to launch and again as soon as it is established in orbit. Periodic measurements of each would be made during their orbital stay, using thermistor sensors at various positions on the vehicle's skin. Tests should determine variations in charge build-up due to light and dark periods, to differences in reflectivities, absorptivities and exposed surface areas of the various orbiting vehicles and also variations due to the exposure time. Additional experimentations using a remote controlled rendezvous satellite may also be used to test and observe the discharge phenomena, if such a discharge does occur and to investigate various ways of coping with such a hazard. Most of the experimentation could probably be done remotely with no EVA required.

ORBIT REQUIREMENTS: Altitude 350 to 550 km - Inclination 28° - 33°

EXPERIMENT MASS: 122 kg (270#)

EXPERIMENT VOLUME: 0.17 m^3 (6.0 ft^3)

EXPERIMENT POWER: 400 w. peak

EXPERIMENT DURATIONS: 6 to 12 months

NUMBER OF TIMES/FLIGHT: Undefined

EXPERIMENT MANHOURS/DAY: Undefined

TOTAL EXPERIMENT MANHOURS: 220 man hours

5. EXPERIMENT IMPLEMENTATION:

- Required no later than 2nd quarter of 1970, should be started no later than 2nd quarter of 1969, desirable to have started as early as first quarter 1968.
- Requirements within AES and Apollo capabilities.
- Could be initiated on Apollo in 1968 or possibly even on Gemini and continued through Apollo and AES.

6. EXPERIMENT SKETCH:

See next page.

EXPERIMENT EA-10

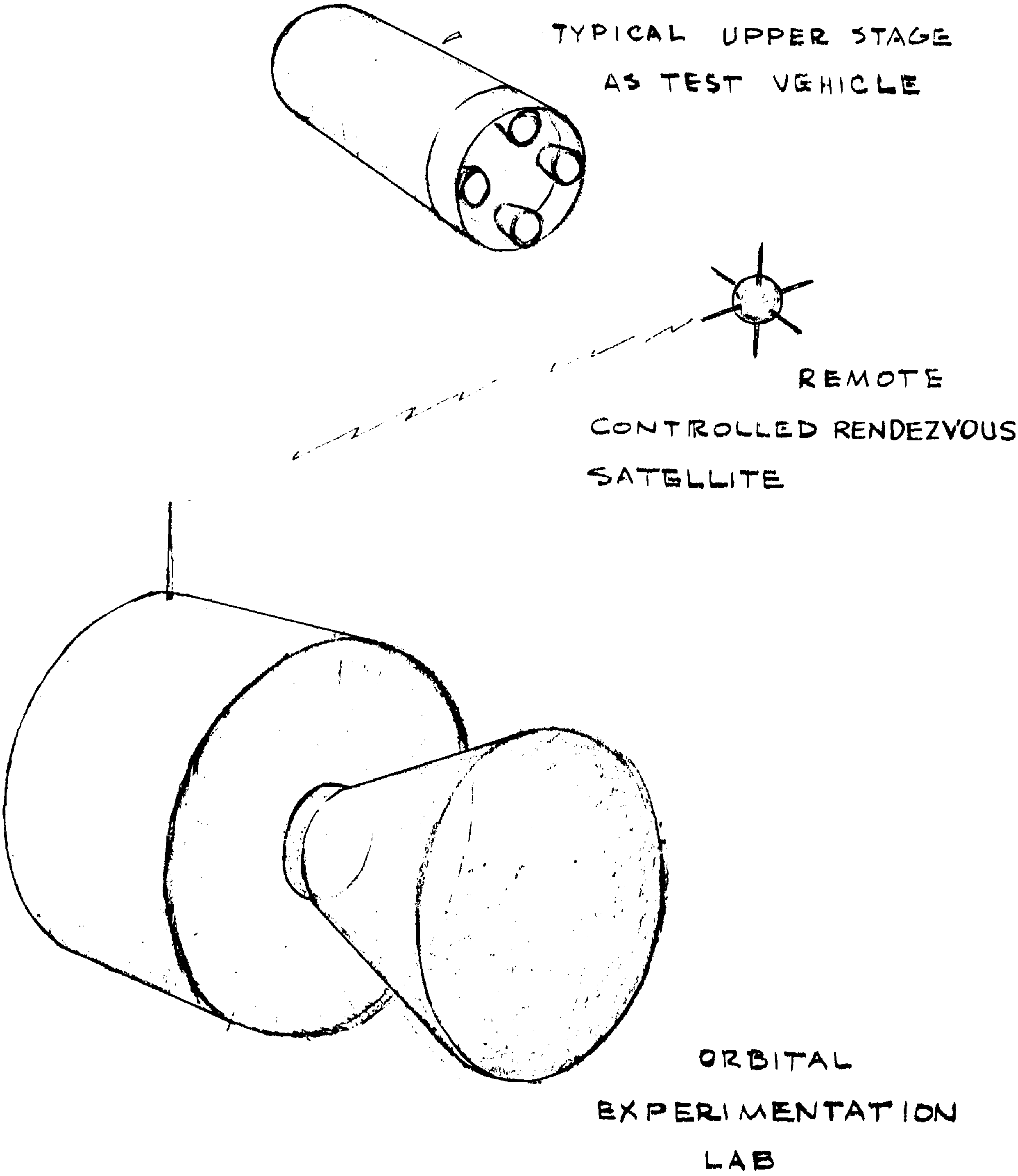

DESCRIPTION - OLO EXPERIMENT FOR ORLs

EXP NO. MR-1

1. EXPERIMENT CATEGORY: Maintenance and Repair (MR)

1.1 EXPERIMENT TITLE: Structural Repair - Welding Techniques

2. JUSTIFICATION:

a. One primary effect of providing orbital maintenance and repair capability is an increase in the probability of mission success. Manned orbital programs to date have already proved the value of having this capability, particularly for remedying unsuspected adverse situations. The best method of achieving impromptu repair capability is by providing as much training and experience as possible in acceptable emergency repair methods. As system's designs change, maintenance and repair methods and equipment must be updated and tested for compatibility.

b. Welding, as one of our primary structural joining and repair methods, should be developed for emergency repair as well as for routine assembly operations.

3. SUMMARY DESCRIPTION:

As a basic method of joining and patching structures, welding probably will find extensive application in the assembly operations of large space systems. Likewise the situation that may exist in case of damaged or failed structure may permit welding as the mode of repair. However, the extent of welding applicability in emergency repair situations and the procedures and techniques that could and should be used in the various environmental conditions that may be encountered in a space station operation has yet to be determined. This series of experiments is intended to investigate these possibilities and develop appropriate techniques, procedures and support equipment.

4. OPERATIONAL PROCEDURE:

This experiment or series of experiments is actually an extension of the basic erection and assembly experiments as proposed in EA-1 and should probably be performed in conjunction with those experiments. These tests would be primarily directed at determining the constraints of limitations on welding applicability in various uncontrolled environmental situations that could be encountered in an emergency situation. The techniques, procedures and necessary support equipment for making acceptable temporary fixes in emergency situations, should also be determined. Such operations should be tested in pressurized, partially pressurized and unpressurized environments. The equipment and manpower requirements for these experiments should be the same as for EA-1, unless additional equipment is needed to simulate some emergency situation. Estimates of experimental requirements to provide the basic capability desired for the OLF are as follows:

ORBIT REQUIREMENTS: No particular orbit requirements

EXPERIMENT MASS: 530 kg (1170 lbm)

EXPERIMENT VOLUME: 1.24 m^3 (43.8 ft ^{3})

EXPERIMENT POWER: 1,500 w peak

EXPERIMENT DURATIONS: Undefined

NUMBER OF TIMES/FLIGHT: Undefined

EXPERIMENT MANHOURS/DAY: Undefined

TOTAL EXPERIMENT MANHOURS: 100 man hours

5. EXPERIMENT IMPLEMENTATION:

- Required no later than 1st quarter of 1972, desired 1st or 2nd quarter of 1970, should use information from EA-1.
- Requirements within AES capabilities

6. EXPERIMENT SKETCH:

None

DESCRIPTION - OLO EXPERIMENT FOR ORLs

EXP. NO. MR-2

1. EXPERIMENT CATEGORY: Maintenance & Repair (MR)

1.1 EXPERIMENT TITLE: Structural Repair - Emergency Techniques

2. JUSTIFICATION:

One primary effect of providing orbital maintenance and repair capability is an increase in the probability of mission success. Manned orbital programs to date have already proved the value of having this capability, particularly, for remedying unsuspected adverse situations. The best method of achieving this impromptu repair capability is providing as much training and experience possible in acceptable emergency repair methods. As system's designs change, maintenance and repair methods and equipment must be updated and tested for compatibility.

3. SUMMARY DESCRIPTION:

Various possibilities of structural failure could be encountered in long-life space vehicles the cause of which could be structural fatigue, damage due to collisions, corrosion, explosions, fire, meteoroid punctures, etc. In any case the situation would have to be quickly analyzed, decisions made to repair or abort and appropriate action taken. A decision to repair would be based upon a knowledge of whatever structural repair capabilities are available at that time. The purpose of these experiments would be to investigate various possible methods of repairing structures under different emergency conditions and develop acceptable techniques, procedures and equipment for accomplishing these tasks. The applicability of such experimental data for other future space systems is obvious.

EXP. NO. M-2

4. OPERATIONAL PROCEDURE:

These experiments would actually be an extension of the earlier developed techniques and equipment for routine structural assembly into emergency applications where new or modified methods of operation may be required. At this time detailed experimental requirements have not been developed. However, the need for such experimentation that will identify plausible methods of meeting critical situations involving structural damage or failures, is evident. Structural cutting, disassembly, removal and reassembly, techniques and procedures for various possible emergency situations and in various possible environmental conditions should be investigated and developed. Tests in at least the fully pressurized environment, partially pressurized environment and an unpressurized environment should be performed. These experiments could be accomplished in conjunction with EA-3 and EA-4. The basic equipment required would be the same as for EA-4, except possibly some additional emergency situation simulation provisions.

ORBIT REQUIREMENTS: No particular orbit requirements

EXPERIMENT MASS: 454 kg (1000 lbm)

EXPERIMENT VOLUME: 0.62 m^3 (22.0 ft^3)

EXPERIMENT POWER: 1000 w peak

EXPERIMENT DURATIONS: Undefined

NUMBER OF TIMES/FLIGHT: Undefined

EXPERIMENT MANHOURS/DAY: Undefined

TOTAL EXPERIMENT MANHOURS: 200 man hours

5. EXPERIMENT IMPLEMENTATION:

- Required no later than 1st quarter of 1972, desired 1st or 2nd quarter of 1970.
- Requirements within AES capabilities.
- Could be performed in conjunction with EA-3 and EA-4.

6. EXPERIMENT SKETCH:

None

DESCRIPTION - OLO EXPERIMENT FOR ORLs

EXP. NO. MR-3

1. EXPERIMENT CATEGORY: Maintenance & Repair (MR)

1.1 EXPERIMENT TITLE: Special Personnel Tools

2. JUSTIFICATION:

One primary effect of providing orbital maintenance and repair capability is an increase in the probability of mission success. Manned orbital programs to date have already proved the value of having this capability, particularly for remedying unsuspected adverse situations. The best method of achieving this impromptu repair capability is by providing as much training and experience possible in acceptable emergency repair methods. As system's designs change, it is imperative that maintenance and repair methods and equipment be updated and tested for compatibility.

3. SUMMARY DESCRIPTION:

A primary goal in the space program is to make maximum use of previously developed and proven hardware, tools, procedures, etc. This is highly desirable, but only to the extent that such utilization of developed technology does not severely hamper the achievement of the particular mission objectives. In all newly developed systems there will evolve some original requirements, some of which will be in the area of tools and equipment for maintaining and repairing the systems. The intention of this series of experiments is, therefore, to merely provide the frame work of orbital testing within which special personnel tools can be developed and proven. The applicability to future space systems is obvious.

EXP. NO. MR-3

4. OPERATIONAL PROCEDURE:

Specific experimentation which might be included in this area has not yet been defined. However, the need for such experimentation in all future space systems development is evident. This experimentation would evaluate various tool concepts and basic operating principles, provide data for inclusion in the maintainability guidelines for the space systems design, provide operational confidence that the tools adopted are capable of doing the job for which they are intended and provide techniques and procedural information for crew training purposes. Generally the experiments anticipated in this area would require only two or three men with the experimental tools, power source (if tool is powered); a working platform, tethers and or harness and an experiment breadboard upon which the tools can be tested. The general requirements estimated to provide the basic tool development for the OLF are as follows:

ORBIT REQUIREMENTS: No particular orbit requirements

EXPERIMENT MASS: 125 kg (275#)

EXPERIMENT VOLUME: 0.39 m^3 (13.8 ft^3)

EXPERIMENT POWER: 700 w.

EXPERIMENT DURATIONS: Undefined

NUMBER OF TIMES/FLIGHT: Undefined

EXPERIMENT MANHOURS/DAY: Undefined

TOTAL EXPERIMENT MANHOURS: 30 man hours

5. EXPERIMENT IMPLEMENTATION:

- Required no later than 1st quarter of 1972, desired 2nd quarter of 1971, will required OLF preliminary design information in tool design and experiment definition.
- Requirements within AES capabilities

6. EXPERIMENT SKETCH:

None

DESCRIPTION - OLO EXPERIMENT FOR ORLs

EXP. NO. MR-4

1. EXPERIMENT CATEGORY: Maintenance & Repair (MR)

1.1 EXPERIMENT TITLE: Special Repair Shop Tools

2. JUSTIFICATION:

a. One primary effect of providing orbital maintenance and repair capability is an increase in the probability of mission success. Manned orbital programs to date have already proved the value of having this capability, particularly for remedying unsuspected adverse situations. The best method of achieving impromptu repair capability is by providing as much training and experience possible in acceptable emergency repair methods. As systems designs change, maintenance and repair methods and equipment must be updated and tested for compatibility.

b. Larger space vehicles make more extensive repair capability possible, therefore, appropriate shop equipment and procedures must be developed and proven.

3. SUMMARY DESCRIPTION:

Many of the common shop tools and machines that are presently used for shop work on the Earth would not be suitable for use in orbit because of disturbing torques that might be imparted to the space facility and because of their various dependencies upon gravity for their operation, lubrication and general well being. The purpose of this series of experiments would be first to provide basic research data as may be required from a completely zero gravity environment to develop acceptable power application principles for orbital shop machinery, and second to prove the basic designs of contemplated shop machinery and develop the techniques and procedures for operating, maintaining and repairing the equipment. The applicability to future larger and longer-life space systems where increased repair capability is desirable is obvious.

EXP. NO. MR-4

4. OPERATIONAL PROCEDURE:

Testing of full scale orbital shop machinery may not be too practical in some of our early space systems, but scaled down versions may suitably prove or disprove the basic design concepts. Initially for such systems as the OLF, it is conceivable that relatively small metal cutting and bonding machines may be desirable, and possibly a bench lathe and milling machine. Various "boiler-plate" versions of these machines could be tested in orbit to verify their operability and to develop methods of operation to prevent foreign debris, such as shavings, metal dust, lubricants or cutting agents from escaping into the surrounding station atmosphere. Details of various experiments would be developed as the machine concepts evolve. However, the experimentation estimated for developing the basic shop needs for the OLF would include the experimental machines mentioned above, vacuum systems, added contaminant detection systems, experimental raw material specimens, basic tools, tethers & harnesses and observation and data recording equipment. Probably two men could perform all of the experimentation required herein.

ORBIT REQUIREMENTS: No particular orbit requirements

EXPERIMENT MASS: 226 kg (500 #)

EXPERIMENT VOLUME: 0.25 m^3 (8.7 ft^3)

EXPERIMENT POWER: 6000 w peak

EXPERIMENT DURATIONS: 7 days (6.3 hrs/day)

NUMBER OF TIMES/FLIGHT: 12 tests/flight

EXPERIMENT MANHOURS/DAY: 12.6 man hours/day

TOTAL EXPERIMENT MANHOURS: 88 manhours

5. EXPERIMENT IMPLEMENTATION:

- Required no later than 1st quarter of 1972, desired earlier, but because of space and power must wait until AES, maybe 3rd or 4th quarter of 1970.
- Requirements within AES capabilities

6. EXPERIMENT SKETCH:

None

DESCRIPTION - OLO EXPERIMENT FOR ORLs

EXP. NO. MR-4-1

1. EXPERIMENT CATEGORY: Maintenance & Repair (MR)

1.1 EXPERIMENT TITLE: Special Repair Shop Tools - Integrated Electronics Circuitry Repair Equipment

2. JUSTIFICATION:

a. One primary effect of providing orbital maintenance and repair capability is an increase in the probability of mission success. Manned orbital programs to date have already proved the value of having this capability, particularly for remedying unsuspected adverse situations. The best method of achieving impromptu repair capability is by providing as much training and experience possible in acceptable emergency repair methods. As system's designs change, maintenance and repair methods and equipment must be updated and tested for compatibility.

b. Larger space vehicles make more extensive repair capability possible, therefore, appropriate shop equipment and procedures must be developed and proven.

3. SUMMARY DESCRIPTION:

Much of the total equipment required on board a space station, and particularly one which is involved in experimental work or in checkout, control amd monitoring operations, involves integrated electronic circuitry. A facility for repairing such circuitry on-board long life space vehicles could offer significant advantage. This experiment is intended to provide developmental and proof testing of a microcircuitry reproduction apparatus that could take advantage of the natural vacuum of the space environment. Such a production capability would provide added repair capability for all future large space vehicles, particularly those whose expected life time is of extended duration.

4. OPERATIONAL PROCEDURE:

This experiment would probably require not more than two men and would be simply to checkout the reproduction process in orbit. The techniques and procedures would have been established prior to orbital experimentation and the experiment plan would follow prescribed procedures with modifications only as difficulties are encountered. The experiment would be conducted inside the orbiting station with a vacuum inlet from the spacecraft's exterior. Various types of circuitry should be reproduced by this process to determine the extent of applicability.

ORBIT REQUIREMENTS: No particular orbit requirements

EXPERIMENT MASS: 45 kg (100#)

EXPERIMENT VOLUME: 6.34 m^3 (224 ft^3)

EXPERIMENT POWER: 60 watts

EXPERIMENT DURATIONS: 10 days

NUMBER OF TIMES/FLIGHT: 10 - 15 times

EXPERIMENT MANHOURS/DAY: 7.0 man hours/day

TOTAL EXPERIMENT MANHOURS: 70.0 man hours

5. EXPERIMENT IMPLEMENTATION:

- Required no later than 1st quarter of 1972, desired earlier, but because of space and power must wait until AES, maybe 3rd or 4th quarter of 1970.
- Requirements within AES capabilities.

6. EXPERIMENT SKETCH:

None

DESCRIPTION - OLO EXPERIMENT FOR ORLs

EXP. NO. MR-5

1. EXPERIMENT CATEGORY: Maintenance & Repair (MR)

1.1 EXPERIMENT TITLE: Leak Detection - Life Support Structure

2. JUSTIFICATION:

The capability of detecting system malfunctions, analyzing the troubles and performing the maintenance and/or repair necessary to assure continued acceptable performance of systems, is a significant factor in providing a high probability of mission success. Also from the standpoint of crew safety and economy, the development of leak detection and other malfunction detection systems is highly important in the total space systems development programs.

3. SUMMARY DESCRIPTION:

In future space vehicles where extended mission durations are expected, detection of leakage of the life supporting atmoshpere is of utmost importance. The object of this experiment or series of experiments would, therefore, be to test various possible methods of leak detection in the orbital environment and to develop techniques and procedures for detecting and locating the leak. The results of these experiments would prove or disprove the adequacy of leak detection equipment and provide basic procedural information that would be used in establishing earth-based crew training in the use of such systems. Systems developed for the OLF application would be applicable for most other two-gas atmosphere systems.

4. OPERATIONAL PROCEDURE:

Specific experimentation which would be included in this series of tests has not yet been defined. Various detection systems involving gas chromatography, mass spectrometry, microwave spectrometry, etc. are being contemplated, but no attempt is made at this time to specify concepts which should be tested nor the experimental procedure which should be followed. However, it is conceivable that the major part of the developmental aspects and perhaps concept selection may be made based upon tests in Earth-based simulators. The orbital experiments would be directed primarily at final verification of the detection systems operability and at establishing the best operating procedures and most expedient methods of detecting that a leak has occurred and then locating it while in the actual hard vacuum and zero gravity environment of orbital operations. General estimates of possible experimental requirement are as follows:

ORBIT REQUIREMENTS: No particular orbit requirements

EXPERIMENT MASS: 118 kg (260 lbm)

EXPERIMENT VOLUME: 0.40 m^3 (14.0 ft3)

EXPERIMENT POWER: 350 w

EXPERIMENT DURATIONS: Undefined

NUMBER OF TIMES/FLIGHT: Undefined

EXPERIMENT MANHOURS/DAY: Undefined

TOTAL EXPERIMENT MANHOURS: 100 man-hours

5. EXPERIMENT IMPLEMENTATION:

- Required no later than 1st quarter of 1972, desired earlier. Could even be done on Apollo in 2nd quarter of 1968.
- Requirements within AES capability

6. EXPERIMENT SKETCH:

None

DESCRIPTION - OLO EXPERIMENT FOR ORLs

EXP. NO. L-1

1. EXPERIMENT CATEGORY: Launch (L)

1.1 EXPERIMENT TITLE: Thrust Motor-Jet Exhaust Effects

2. JUSTIFICATION:

Orbital launch operations involving orbiting support vehicles and equipment present the problem of determining the safe separation distance between the supporting vehicles and the orbital launch vehicle. An optimum distance should be determined at which no real hazard exists in regards to various possible launch effects and hazards, but where support equipment are readily accessible and orbital launch control is easily exercised. Detrimental effects on supporting systems, if any, and possible hazards of launching large space vehicles from orbit must be determined before this can be accurately evaluated.

3. SUMMARY DESCRIPTION:

Numerous opportunities will be presented in earlier programs for evaluating the effects of rocket exhausts on various systems and materials. Some experimentation presently planned, involves investigation of the effects of solid propellants exhausts, heated oxygen rocket motor exhausts, the exhaust of reaction control jets on various materials. This experiment is intended as an extension of those investigations to determine direct and indirect exhaust effects of rockets using the above listed and other propellants such as O_2 - H_2, other storables and possibly H_2 with a nuclear reactor serving as a heat source. The results of these tests are vital to the planning and designing of orbital launch operations.

EXP. NO. L-1

4. OPERATIONAL PROCEDURE:

Experiments in this area could normally be performed by two to three men. Tests of particular interest to the development of an initial orbital launch capability are those investigating the effects of oxygen & hydrogen, solid propellants and storable liquid propellant rocket exhausts in both direct impingement on spacecraft surfaces and indirect attraction and bathing of the spacecraft surfaces or appendages. It is likely that the primary concern in regards to direct impingement effects would be with the storable liquid propellants which are used mostly in the reaction control systems of various space vehicles. Investigation of the indirect effects would be concerned more with the exhausts of primary thrust motors of the orbital launch vehicles (oxygen/hydrogen), logistics vehicles (storable hyperbolics and solid propellants), LOX tankers and other possible transient vehicles. Most of the experiments investigating direct impingement of logistics vehicles exhausts could be accomplished with little cost in equipment other than material specimens and mounting apparatus. Scale model simulations with oxygen-hydrogen thrusters and small solid rocket motors could be performed as pictured in the attached sketch wherein specimen of different materials could be mounted in various positions with respect to the model's exhaust and at different distances. This data should allow reasonable extrapolation for larger systems effects.

ORBIT REQUIREMENTS: No particular orbit requirements

EXPERIMENT MASS: 323 kg (710#)

EXPERIMENT VOLUME: 0.64 m^3 (22.6 $ft.^3$)

EXPERIMENT POWER: 200 w

EXPERIMENT DURATIONS: 40 hours (4.0 hours/day for 10 days)

NUMBER OF TIMES/FLIGHT: 10 tests/flight

EXPERIMENT MANHOURS/DAY: 8.0 man-hours/day

TOTAL EXPERIMENT MANHOURS: 80.0 man-hours

5. EXPERIMENT IMPLEMENTATION:

- Required no later than 2nd quarter of 1970, desired 1st quarter of 1969. Could start on Apollo with main experiments later on AES.
- Requirements within AES capability.

6. EXPERIMENT SKETCH:

See next page.

EXPERIMENT L-1

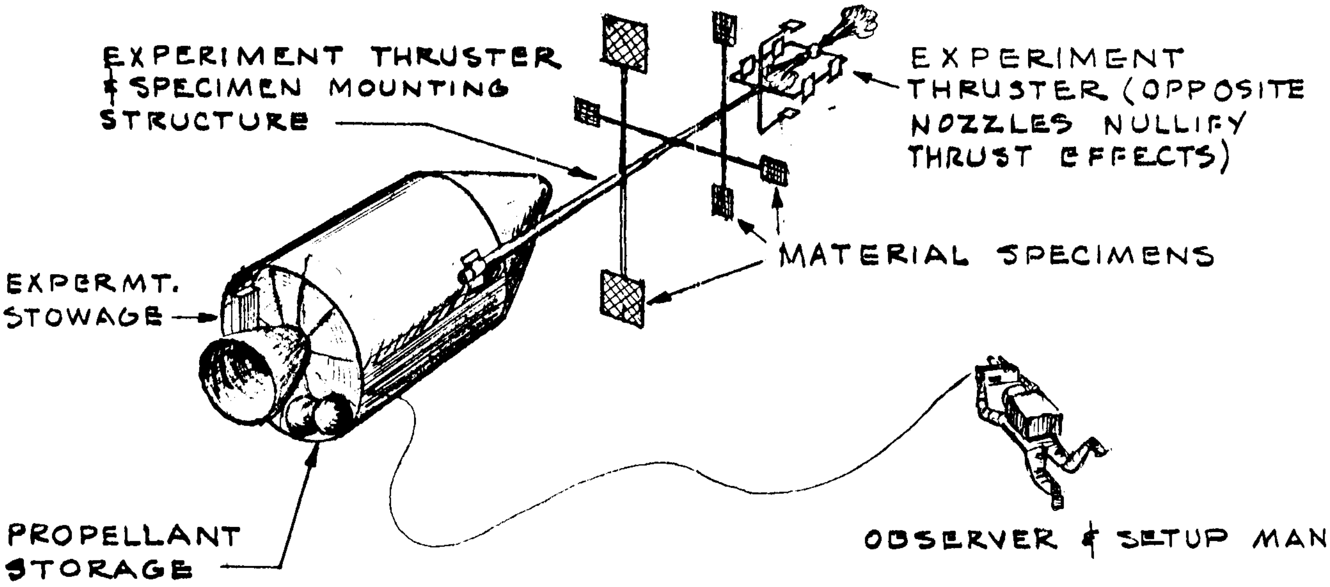

DESCRIPTION - OLO EXPERIMENT FOR ORLs

EXP. NO. L-2

1. EXPERIMENT CATEGORY: Launch (L)

1.1 EXPERIMENT TITLE: Space Vehicle Explosion - Debris Hazard

2. JUSTIFICATION:

Orbital launch operations involving orbiting support vehicles and equipment present the problem of determining the safe separation distance between the supporting vehicles and the orbital launch vehicle. An optimum distance should be determined at which no real hazard exists in regards to various possible launch effects and hazards, but where the support equipment are readily accessible and orbital launch control can be exercised effectively. Detrimental effects on supporting systems, if any, and possible hazards of launching large space vehicles from orbit must be determined before this can be accurately evaluated.

3. SUMMARY DESCRIPTION:

The task of investigating explosion phenomena in space presents numerous problems. Full scale experiments may release debris into various intersecting orbits, which could pose as a hazard to orbiting spacecraft. Deep space explosion experiments could be performed, but the observation and data accrual for such tests is difficult. Smaller scale explosion experiments in orbit are possible, but could still offer possibilities of creating hazardous orbital conditions for other orbiting systems. Various others problems probably exist and are being considered in minute detail, but from the standpoint of designing orbital space stations and other supporting equipment for supporting orbital launch operations, an understanding of the explosion phenomena and explosion effects on various materials at various distances is highly important if high confidence designs are to be achieved.

4. OPERATIONAL PROCEDURE:

No attempt is made to define explosion experiments at this time inasmuch as this is an area of investigation which requires much greater consideration than can be given in this study. However, it is conceivable that in view of the importance of having this information, feasible experiments could be developed, which would utilize man in an orbiting station to control the experiments and through remote means acquire considerably better data than could be accomplished from Earth-based stations. Remotely controlled maneuverable satellites, controlled from the orbiting laboratory could be used to deliver the explosion experiment to a designated location in space, deploy sensing probes in the experiment vicinity, retire to a predetermined observation distance and provide TV and/or camera coverage of the experiment. Initial investigations could use extremely low yield explosives in containers constructed of materials which, when fragmented and dispersed at varying velocities, would not constitute a hazard to orbiting space systems. The actual explosion experiment could be designed with shock absorbing and shielding provisions for immediate protection of the orbiting control station. Shaped explosive charges may also be used to further control the direction of the explosive discharge. Only gross requirements have been estimated for some such initial experimentation which could be sufficient to provide reasonable evaluation and confidence data.

ORBIT REQUIREMENTS: Attitude 350 - 550 km Inclination 28°- 33°

EXPERIMENT MASS: 545 kg (1200#)

EXPERIMENT VOLUME: $0.96 m^3$ ($34 ft^3$)

EXPERIMENT POWER: 600 w

EXPERIMENT DURATIONS: Undefined

NUMBER OF TIMES/FLIGHT: Undefined

EXPERIMENT MANHOURS/DAY: Undefined

TOTAL EXPERIMENT MANHOURS: 100 man-hours

5. EXPERIMENT IMPLEMENTATION:

- Required no later than 2nd quarter of 1970, desired 1st quarter of 1969.
- Requirements within AES capabilities.

6. EXPERIMENT SKETCH: See next page.

EXPERIMENT L-2

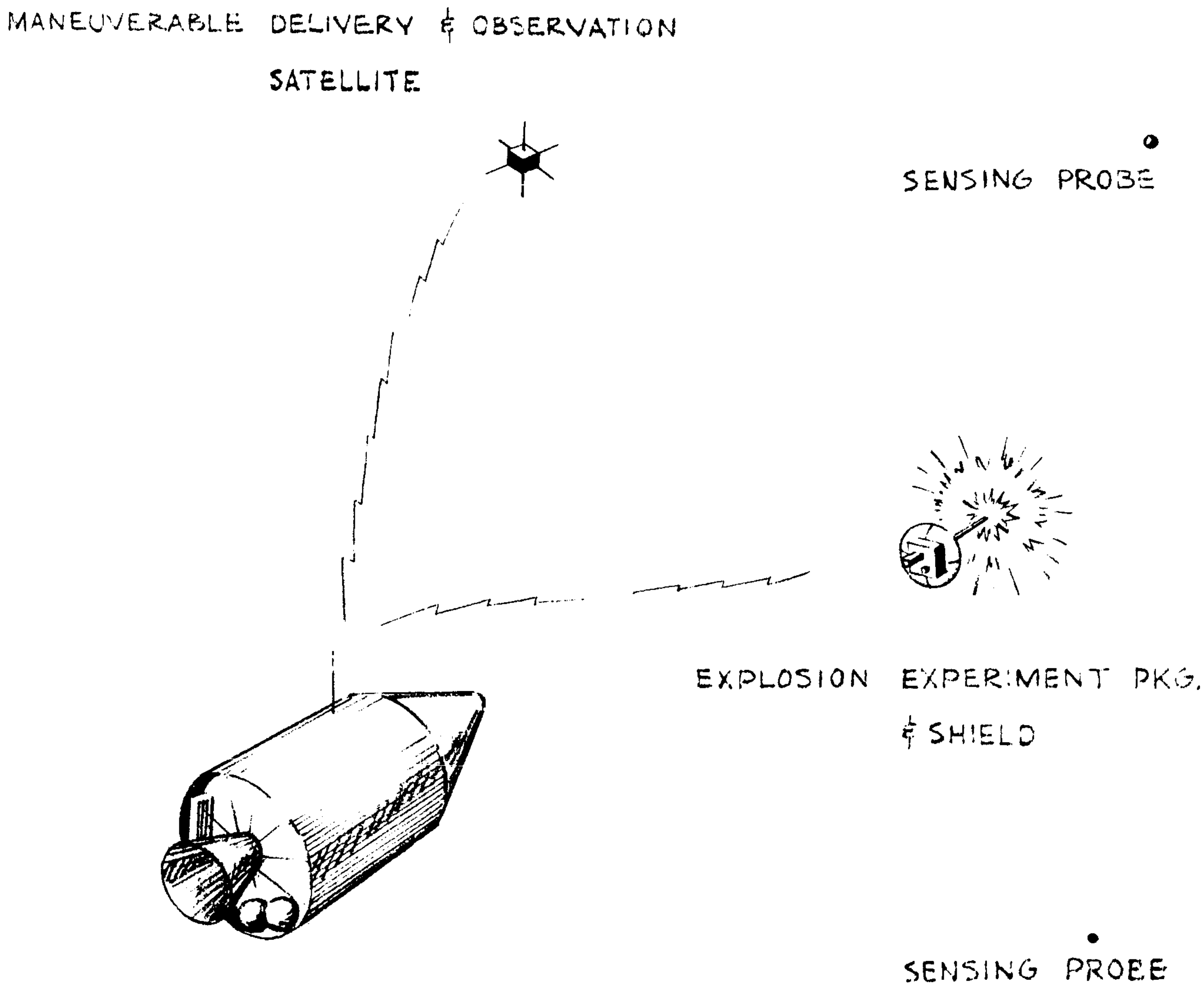

NO.	EXPERIMENT TITLE	ORBIT	MASS Kg - (lbm)	VOLUME, m^3 - (ft^3)	POWER (watts)	DURATION (days)	TIMES/ FLIGHT	MAN-HRS/ DAY	TOTAL MAN-HRS.
PT/AG-1	Intravehicular Transfer - Rotating Station (Personnel)	Any	126 (280)	0.62 (21.9)	350	8	4	15.0-16.5	126
PT/AG-2	Extravehicular Transfer - Rotating Station (Personnel)	350-550 km 28°-33° Incl.	305 (675)	0.98 (34.7)	350	4	8	22.5	90
CT/AG-1	Extravehicular Transfer - Rotating Station (Cargo)	350-550 km 28°-33° Incl.	416 (920)	1.11 (39.2)	550	6	12	21.0	126
CT/AG-2	Intravehicular Transfer - Rotating Station (Cargo)	Any	213 (470)	0.70 (24.6)	550	2	4	33.0	66
CT/ZG-1	Conveyor System - Zero Gravity	Any	207 (455)	0.46 (16.3)	700	4	8	14.0	56
CT/ZG-2	Separation System - Spacecraft Modules	Any	663 (1460)	1.01 (35.6)	Undefined	Undefined	Undefined	Undefined	400
EA-1	Vacuum Welding Techniques	Any	530 (1170)	1.25 (43.8)	1500 Peak	6-12 Mos.	1	9.0	27
EA-2	Extendable Umbilical Tower	Any	547 (1205)	1.45 (51.3)	900 Peak	1 Yr.	20	10.0 1st 3 days	50
EA-3	Extendable Structures Operations	Any	127 (280)	0.37 (13.1)	1000 Peak	2 mos.	60	5.0 initial 0.7 daily	52
EA-4	Internal Structural Assembly Procedures	Any	417 (920)	0.59 (20.7)	1000 Peak	6	6	16.5	99
EA-5	Removal, Transfer & Installation of Passive Structure	Any	435 (960)	1.17 (41.4)	350	5	10	16.8	84
EA-[illegible]	OLF Stabilization with Scaled OLC Hardware	Any	794 (1754)	5.28 (187)	600	6	3	22.5	135
EA-10	Space Vehicle Static Electricity Potential	350-550 km 28°-33° Incl.	122 (270)	0.17 (6.0)	400 Peak	6-12 Mos.	Undefined	Undefined	200
MR-1	Structural Repair-Welding Techniques	Any	530 (1170)	1.24 (43.8)	1500 Peak	Undefined	Undefined	Undefined	100
MR-2	Structural Repair-Emergency Tech.	Any	454 (1000)	0.62 (22.0)	1000 Peak	Undefined	Undefined	Undefined	200
MR-3	Special Personnel Tools	Any	125 (275)	0.39 (13.8)	700	Undefined	Undefined	Undefined	30
MR-4	Special Repair Shop Tools	Any	226 (500)	0.25 (8.7)	6000 Peak	7	12	12.6	88
MR-4-1	Special Repair Shop Tools-Integrated Electronic Circuitry Repair Equip.	Any	45 (100)	6.34 (224)	60	10	10-15	7.0	70
MR-5	Leak Detection-Life Support Structure	Any	118 (260)	0.40 (14.0)	350	Undefined	Undefined	Undefined	100
L-1	Thrust Motor-Jet Exhaust Effects	Any	323 (710)	0.64 (22.6)	200	10	10	8.0	80
L-2	Space Vehicle Explosion-Debris Hazard	350-550km 28°-33° Incl.	545 (1200)	0.96 (34.0)	600	Undefined	Undefined	Undefined	100
									2279

Figure 6.3-7: EXPERIMENTS REQUIREMENTS SUMMARY

FIGURE 6.3-8 EXPERIMENT PRIORITY

Experimental Objectives Priority Criteria	Weighting Factor	Multiplying Factor	Value
Man Related		4	
Crew Safety	3		12
Biomedical/Behavioral	2		8
Operational Capability	1		4
New Hardware		3	
Hardware System	3		9
Major Subsystem	2		6
Minor Subsystem	1		3
Systems Operations		2	
Subsystem Operation	3		6
Utilization of Hardware	2		4
Operational Procedures	1		2
OLO Procedures		1	
Man's Utilization	3		3
Man/Machine Interface	2		2
Training	1		1

Prioritize each experiment
Establish listing based upon priority
Review listing with respect to Sequence
Master listing of experiments

these values is the total priority value of that experiment, which provided basis for the initial ranking of the defined experiments. Figure 6.3-9 summarizes the priorities calculated for each of the 21 experiments. For each experiment, the weighting factor and priority value for each category is given, the total priority value is shown, and the numerical ranking of that experiment with respect to the other 21. Several of the experiments had the same total priority value and were therefore given the same ranking. The ranking for this series of experiments experiments extended between I and XI. Since this priority system is not considered infallible, the ordered ranking of the experiments, as shown in Figure 6.3-10, was reviewed from an engineering standpoint to assure that a logical and consistent ranking was achieved.

EVALUATION VALUES

EXPERIMENT NO.	Man Related		New Hardware		Systems Operations		OLO Procedures		TOTAL PRIORITY VALUE	RANKING
	Factor	Value	Factor	Value	Factor	Value	Factor	Value		
PT/AG-1	2	8	1	3	2	4	3	3	18	VII
PT/AG-2	3	12	1	3	2	4	3	3	22	III
CT/AG-1	3	12	1	3	2	4	2	2	21	IV
CT/AG-2	1	4	1	3	2	4	2	2	13	X
CT/ZG-1	1	4	1	3	3	6	1	1	14	IX
CT/ZG-2	1	4	1	3	3	6	2	2	15	VIII
EA-1	1	4	3	9	2	4	2	2	19	VI
EA-2	1	4	2	6	3	6	2	2	18	VII
EA-3	1	4	3	9	3	6	2	2	21	V
EA-4	1	4	2	6	1	2	3	3	15	VIII
EA-5	1	4	1	3	2	4	1	1	12	XI
EA-7	1	4	3	9	3	6	1	1	20	V
EA-10	3	12	3	9	1	2	2	2	25	I
MR-1	3	12	1	3	3	6	1	1	22	III
MR-2	3	12	1	3	3	6	1	1	22	III
MR-3	1	4	1	3	2	4	1	1	12	XI
MR-4	1	4	1	3	3	6	2	2	15	VIII
MR-4-1	1	4	1	3	3	6	1	1	14	IX
MR-5	3	12	1	3	3	6	1	1	22	III
L-1	1	4	1	3	1	2	2	2	11	XII
L-2	3	12	3	9	1	2	1	1	24	II

Figure 6.3-9: EXPERIMENT PRIORITIES SUMMARY

FIGURE 6.3-10 EXPERIMENT RANKING

RANKING	EXPM'T NO.	EXPERIMENT TITLE
I	EA-10	Space Vehicle Static Electricity Potential
II	L-2	Space Vehicle Explosion - Debris Hazard
III	PT/AG-2	Extravehicular Transfer-Rotating Station (Personnel)
	MR-1	Structural Repair - Welding Techniques
	MR-2	Structural Repair - Emergency Techniques
	MR-5	Leak Detection - Life Support Structure
IV	CT/AG-1	Extravehicular Transfer-Rotating Station (Cargo)
	EA-3	Extendable Structures Operation
V	EA-7	OLF Stabilization with Scaled OLO Hardware
VI	EA-1	Vacuum Welding Techniques
VIII	PT/AG-1	Intravehicular Transfer-Rotating Station (Personnel)
	EA-2	Extendable Umbilical Tower
VIII	CT/ZG-2	Separation System - Spacecraft Modules
	EA-4	Internal Structural Assembly Procedures
	MR-4	Special Repair Shop Tools
IX	CT/ZG-1	Conveyor System - Zero Gravity
	MR-4-1	Special Repair Shop Tools - Integrated Electronics Circuitry Repair Equipment
X	CT/AG-2	Intravehicular Transfer - Rotating Station (Cargo)
XI	EA-5	Removal, Transfer & Installation of Passive Structure
	MR-3	Special Personnel Tools
XII	L-1	Thrust Motor _ Jet Exhaust Effects

As an example of the workings of this priority system, refer to Figure 6.3-9 and to Experiment No. EA-10, which was the number I ranked experiment in this series. Experiment EA-10 is the "Space Vehicle Static Electricity Potential" experiment, which is highly concerned with assuring crew safety in orbital operations where frequent docking of various size vehicles and equipment is involved. In the man-related category, this experiment was rated with a factor of 3, which after multiplying it by the category multiplying factor of 4, gave it a category priority value of 12. The effects of potential differences and possible discharges between vehicles are of concern from an overall hardware design standpoint and are rated 3 in the new hardware category, which results in a category priority value of 9. From the systems operations standpoint, the primary concern is in the operational procedures required to skirt this potential hazard. This category rating of the experiment is 1 and the priority value is then 2. The primary concern of this experiment with respect to OLO procedures is in "where is an acceptable man/machine interface in the operations if such a hazard does exist", therefore, the category rating is 2 and the priority value is 2. The total priority value for EA-10 is therefore the sum of the individual category priority values of 12, 9, 2 and 2 or a total of 25. This was the highest total priority value of this series of experiments, hence, EA-10 was ranked number I. In the overall review of experiment rankings, this ranking of EA-10 appears logical and consistent in that the results of the experiment could significantly affect the design of the OLF and the operational modes of the entire orbital launch operations.

The rankings as shown in Figure 6.3-10 are limited in applicability to OLF development considerations and are not applicable to the total OLO. However, the total priority values are applicable and will be integrated by LTV into the total OLO experiments priority ranking.

6.3.2.3 Experiment Development & Implementation. The development plan of many of the orbital experiments required in the OLF development will be very similar to other minor and perhaps even major subsystem development programs. In some cases the time between the formulation of the experiment requirement and the actual implementation and experiment completion is fairly short, requiring little or no hardware development and only minor procedural planning and integration, while in others the development and implementation may be extensive. No attempt is made in this part of the report to describe or discuss the details of such development plans inasmuch as they are discussed in paragraph 7.1.3.2, the experiment plan section of the total OLF RDT&E plan. It is necessary, however, to postulate developmental requirements in order to provide timing estimates for total space program orbital research planning. A typical experiment development plan is described in paragraph 7.1.3.2, and is referred to as a "normal" development plan. That plan covers an elapsed time period of about two years. Further reference is made in that section to a "simple" and also a "difficult" experiment development plan, which are estimated to require one and one-half and two and one-half years respectively. These estimates of developmental times for "simple", "normal", and "difficult" experiment development programs were used as the basis for estimating the "experiment development go-ahead" time for each of the experiments defined in this study. Each experiment was reviewed with respect to its possible developmental requirements relative to those of the other experiments and a "development difficulty rating" was made for each. The ratings were either "simple", "normal", or difficult", to which the associated estimated time requirements discussed above were attached. Figure 6.3-11 summarizes the developmental time requirements for

EXPERIMENTS No.	EXPERIMENTS Title	Data Required Qtr.	Data Required Year	Development Difficulty Rating	Est. Expm't. & Development Rating	Experiment Development Go-ahead
PT/AG-1	Intravehicular Transfer-Rotating Station (Personnel)	2nd	1970	Difficult	2.5 years	1st 1968
PT/AG-2	Extravehicular Transfer-Rotating Station (Personnel)	2nd	1970	Difficult	2.5 years	1st 1968
CT/AG-1	Extravehicular Transfer-Rotating Station (Cargo)	2nd	1970	Difficult	2.5 years	1st 1968
CT/AG-2	Intravehicular Transfer-Rotating Station (Cargo)	2nd	1970	Difficult	2.5 years	1st 1968
CT/ZG-1	Conveyor System - Zero Gravity	1st	1971	Simple	1.5 years	Mid-1969
CT/ZG-2	Separation System-Spacecraft Modules	1st	1970	Normal	2.0 years	1st 1968
EA-1	Vacuum Welding Techniques	2nd	1970	Normal	3.0	Mid-1967
EA-2	Extendable Umbilical Tower	3rd	1970	Difficult	3.5 years	1st 1967
EA-3	Extendable Structures Operations	4th	1969	Difficult	2.5 years	1st 1967
EA-4	Internal Structural Assy. Procedures	2nd	1970	Simple	1.5 years	1st 1969
EA-5	Removal, Transfer & Installation of Passive Structure	1st	1972	Normal	2.0 years	1st 1970
EA-7	OLF Stabilization with Scaled OLO Hardware	2nd	1970	Difficult	2.5 years	1st 1968
EA-10	Space Vehicle Static Electricity Potential	2nd	1970	Normal	2.8 years	1st 1967
MR-1	Structural Repair-Welding Techniques	1st	1972	Simple	1.5 years	Mid-1970
MR-2	Structural Repair-Emergency Techniques	1st	1972	Normal	2.0 years	1st 1970
MR-3	Special Personnel Tools	1st	1972	Simple	1.5 years	Mid 1970
MR-4	Special Repair Shop Tools	1st	1972	Difficult	2.5 years	Mid 1969
MR-4-1	Special Repair Tools-Integrated Electronics Circuitry Repair Equipment	1st	1972	Normal	2.0 years	1st 1970
MR-5	Leak Detection-Life Support Structure	3rd	1971	Normal	2.0 years	Mid-1969
L-1	Thrust Motor - Jet Exhaust Effects	2nd	1970	Difficult	2.5 years	1st 1968
L-2	Space Vehicle Explosion - Debris Hazard	2nd	1970	Difficult	2.5 years	1st 1968

Figure 6.3-11: EXPERIMENT DEVELOPMENT SUMMARY

each experiment, giving the estimated date (quarter and year) that the data is required in the OLF development program; the development difficulty rating as described above; an estimated experiment development and performance flow time based upon the "simple", "normal", and "difficult" ratings; and upon the experiment duration estimates from Figure 6.3-7 and finally the estimated development go-ahead date (quarter and year). The development difficulty ratings were made on the basis of the following:

Difficult - Programs which may require extensive hardware and/or operational procedures development through Earth-based simulation research, unmanned satellite experiments, etc.

Normal - Programs requiring only moderate amounts of hardware and/or operational procedures development.

Simple - Programs requiring little or no hardware development and only minor procedural development.

From Figure 6.3-11 it can be seen that rather "difficult" development programs are anticipated for almost half of the experiments, each therefore, requiring about two and one-half years plus actual experiment time to complete. About one-third of the experiments development is considered "normal" and will require about two years, and the remainder is considered "simple", requiring only about one and one-half years of development time.

The actual implementation of the orbital research required for the OLF development involves a complexity of considerations, many of which can not be adequately evaluated within the scope of this study. Therefore, the objective of this portion of the study is to suggest possible means of implementing the experimental program within the developmental requirements of the OLF program.

The postulated latest dates that the experimental data is required in the OLF development program are shown in Figure 6.3-11, as well as in Figure 6.3-12. Similar experimentation schedule data are presented in the experiment development schedules of Section 7.1.3.2. The symbols used in Figure 6.3-12 are defined in the legend in the lower left corner. An orbital research planning schedule, reflecting current availability dates for research aboard Gemini, Apollo, AES, or MORL systems, is included along the lower portion of the figure for reference purposes. All of the "latest dates for data" fall within the late 1969 to early 1972 time period, which is prior to the mid-1972 availability date predicted for MORL, and all fall well within the postulated AES time period. From charts provided by the NASA, planned AES capabilities are summarized in Figure 6.3-13. From a comparison of the experiment requirements, which have been defined (as shown in Figure 6.3-7) and the AES capabilities of Figure 6.3-13, it appears that the Apollo Extension Systems (AES) could accommodate all of the experiments defined. There are three or four experiments whose duration exceed the time expected for a single AES flight. However, the nature of those experiments is such that only periodic monitoring or checkout is required during the extended period, hence the experiments could be completed on successive flights. From the standpoint of assuring the availability of the data within the time period required for OLF development, "desired dates for data" were established and are shown on the chart of Figure 6.3-12. It can be seen that at least four of the experiments can at

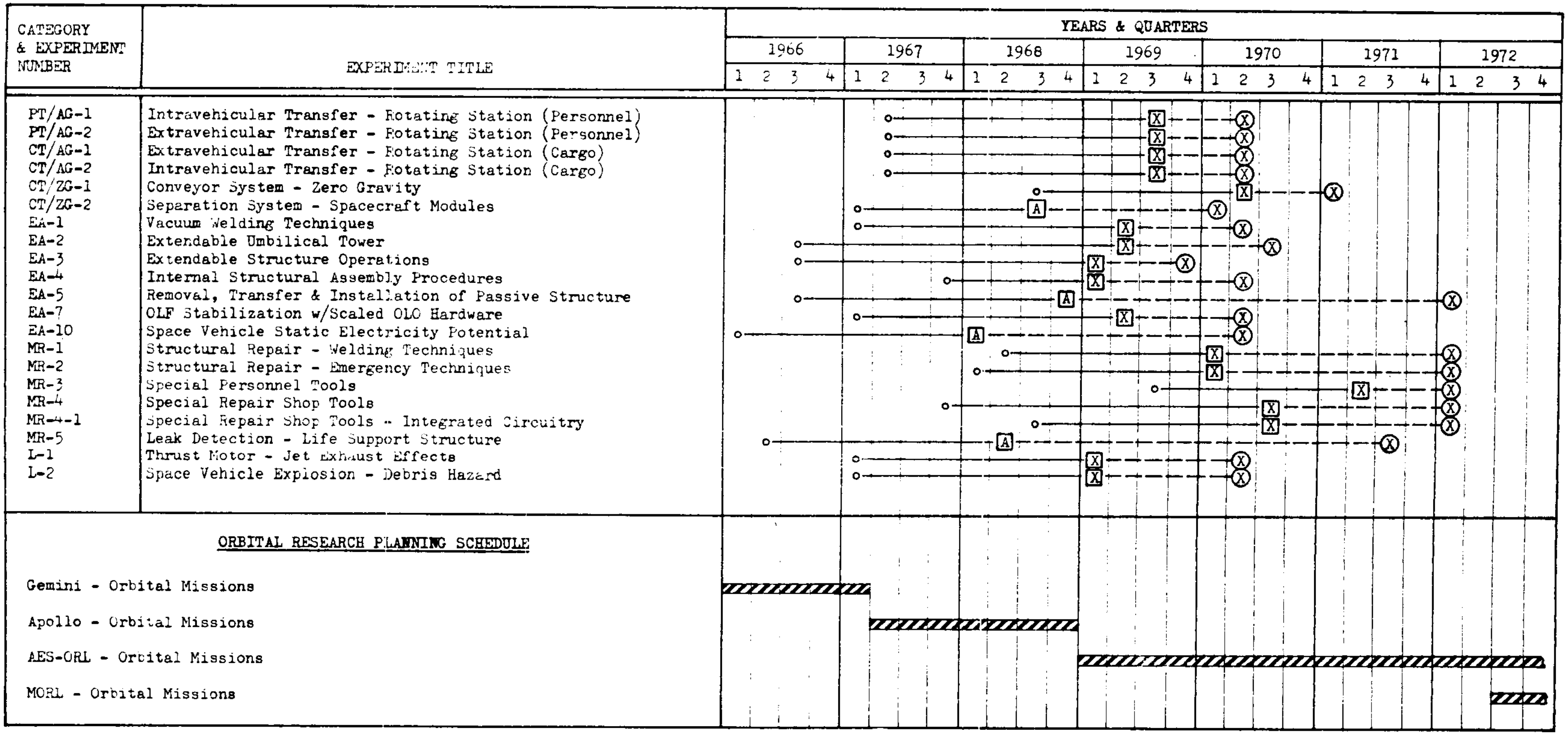

LEGEND:

○ -Latest Date for data

☐ -Desired date for data

o Development Go-ahead date based on desired date for data

A Apollo - Applicable System

X AES - Applicable System

Figure 6.3-12: SCHEDULE OF OLF EXPERIMENTATION ON ORL'S

FIGURE 6.3-13 ASSUMED AES CAPABILITIES

PRESSURIZED VOLUME AVAILABLE

Command Module	- 3 ft^3
LEM	- 2 ft^3
LEM Lab.	- 100 ft^3

UNPRESSURIZED VOLUME

Service Module	- 250 ft^3
LEM Adapter without LEM Ascent Stage	- 6000 ft^3
LEM Adapter under LEM Ascent Stage	- 4000 ft^3

WEIGHT (EXPERIMENT)

3700 lbs to 85,000 lbs.

CREW EXPERIMENT TIME

420 - 1350 hrs. (3 men, 45 days - maximum, 10 hrs/day)

SPACECRAFT POWER

2000 - 6000 w.

least be started and some possibly completed within the Apollo orbital missions to meet the "desired dates for data". These earlier possible dates for accomplishing the experiments obviously advance the date at which experiment development go-ahead must be given. These dates are also shown on the chart. Several of these dates fall within the early and mid-1966 period, which may be somewhat unrealistic inasmuch as the preceding concept development, experiment definition, and preliminary integration planning would have to be accomplished between now and those dates. In the case of the space vehicle static electricity experiment (EA-10), the dates may be more realistic inasmuch as related preliminary experimentation will already have been accomplished aboard Gemini and the requirement for such additional experimentation will have been ascertained.

As was previously stated, the scope of this study did warrant various other considerations which should be included in planning the research implementation. One of those primary considerations is the problem of experiment integration for the entire space program. This most assuredly will play a significant part in forming the implementation plans for this orbital research. The dates which are suggested herein represent reasonable estimates of the latest dates at which the experimental data is needed in the OLF development program to meet an initial orbital launch capability date of 1975 and estimates of more desirable dates for the necessary orbital data accrual. Implementation notes pertaining to individual experiments are included in the experiment descriptions of Section 6.3.2.2.

6.3.3 ORL Experiment Study Conclusions. - In summary, twenty-one experiments in six operational categories were identified as orbital research requirements for OLF development beyond that currently planned or under consideration for the Gemini, Apollo, AES, and MORL programs. From consideration of the experimental requirements, as defined in this study, the total OLF development plan as discussed in Section 7.1, and current planning regarding orbital research, the following conclusions are drawn:

a. All of the experiments defined in this study are required for the OLF development during a time period which presently precedes the postulated availability of the MORL systems, but coincides with the predicted availability of AES.

b. All of the experiment requirements defined can be accommodated in AES as currently conceived, although some extended experiments would have to be completed on successive AES flights.

c. At least four of the twenty-one experiments could be initiated in the Apollo orbital missions.

d. None of the experiments as defined herein could be accomplished in the Gemini program, primarily because of experimental development time and manpower requirements. However, preliminary aspects of some of this experimentation may be investigated and incorporated in the Gemini research program.

e. The experiments identified in this study represent a reasonable cross section of orbital research requirements for CLF development beyond that which is currently being considered in the pre-OLF programs. The experimental requirements, as defined, are considered sufficiently accurate for conceptual experiment definition studies and preliminary integration planning. No experiment integration was attempted in this study.

7.0 OLF DEVELOPMENT PROGRAM

The objective of the Research Development Test & Engineering (RDT&E) plan is to identify activities, schedules and funding required to develop an operational initial OLF for support of manned Mars or Venus flyby missions, and to highlight the pacing elements of the development program. The plan determines and describes the design, development, research, tests and resources necessary to provide an operational OLF, which will initially support the 1975 Venus opportunity. The plan also provides data for evaluating the permanent OLO mode, of which the OLF is a part, with various other modes of accomplishing orbital launches. A cursory study was also performed to provide a very brief RDT&E plan for an advanced OLF to support the manned Mars landing mission.

7.1 Initial OLF RDT&E Plan

This plan is developed in support of a 1975 OLF operational capability which is defined as the ability to support orbital launch operations by providing crew requirements, spares and expendables, maintenance and repair, operational logistics, docking facilities, and hangar space for orbital support equipment. Furthermore, scientific and R&D activities could be accommodated during extended waiting periods, and if feasible, during orbital launch operations.

This level of study, conceptual design, has not revealed any critical develoment problems because the OLF program plan is based on using MORL configurations and concepts and assumes that the critical items in the MORL program have been resolved. The major pacing elements of this initial RDT&E plan are Orbital Research Laboratory (ORL) experiments data and the need to complete system optimization prior to the initiation of experiment development as shown in the Program Schedule, Figure 7.1-1.

The initial OLF RDT&E plan includes a schedule plan, design and development plan, research plan, manufacturing plan, system and qualification test plan, reliability plan, logistics plan, facilities and support equipment plan, management plan and a funding plan from which the following conclusions are drawn:

- The program requires 4 years from hardware go-ahead to launch.
- MORL and Apollo building blocks minimize hardware research requirements.
- Program cost is estimated at $861 million.
- Detailed experiment definition should commence in early 1966.
- ORL experimentation concurrent with fundamental research is required to support program phasing requirements.
- Existing facilities generally can be utilized; simulator facilities expansion at MSC and KSC will be required.
- Orbital acceptance or shakedown testing of the OLF and OLO prior to mission application is recommended.
- Many existing Saturn fabrication and assembly tools can be used in OLF manufacturing.

The framework of standardized formats, symbols, definitions and cost elements as provided by Ling-Temco-Vought in their Technical Information Release No. BD-1, dated February 1, 1965 were used for the RDT&E plan.

7.1.1 Schedule Plan - For schedule planning purposes the NASA Advanced Mission Plans, as defined in the AOLO study package point-of-departure plan, Marshall Space Center Memo R-FP-463-65 dated Nov. 9, 1965, and the guidelines, format, and nomenclature in Ling-Temco-Vought's No. BD-1, were used. In this scheduling activity, support of the 1975 manned Venus flyby mission was established as the operational capability goal. Then, based upon the integrated OLF program requirements and OLO in orbit testing, schedule requirements were established which reflect the initial need for flight MORLs and checkout equipment in the first

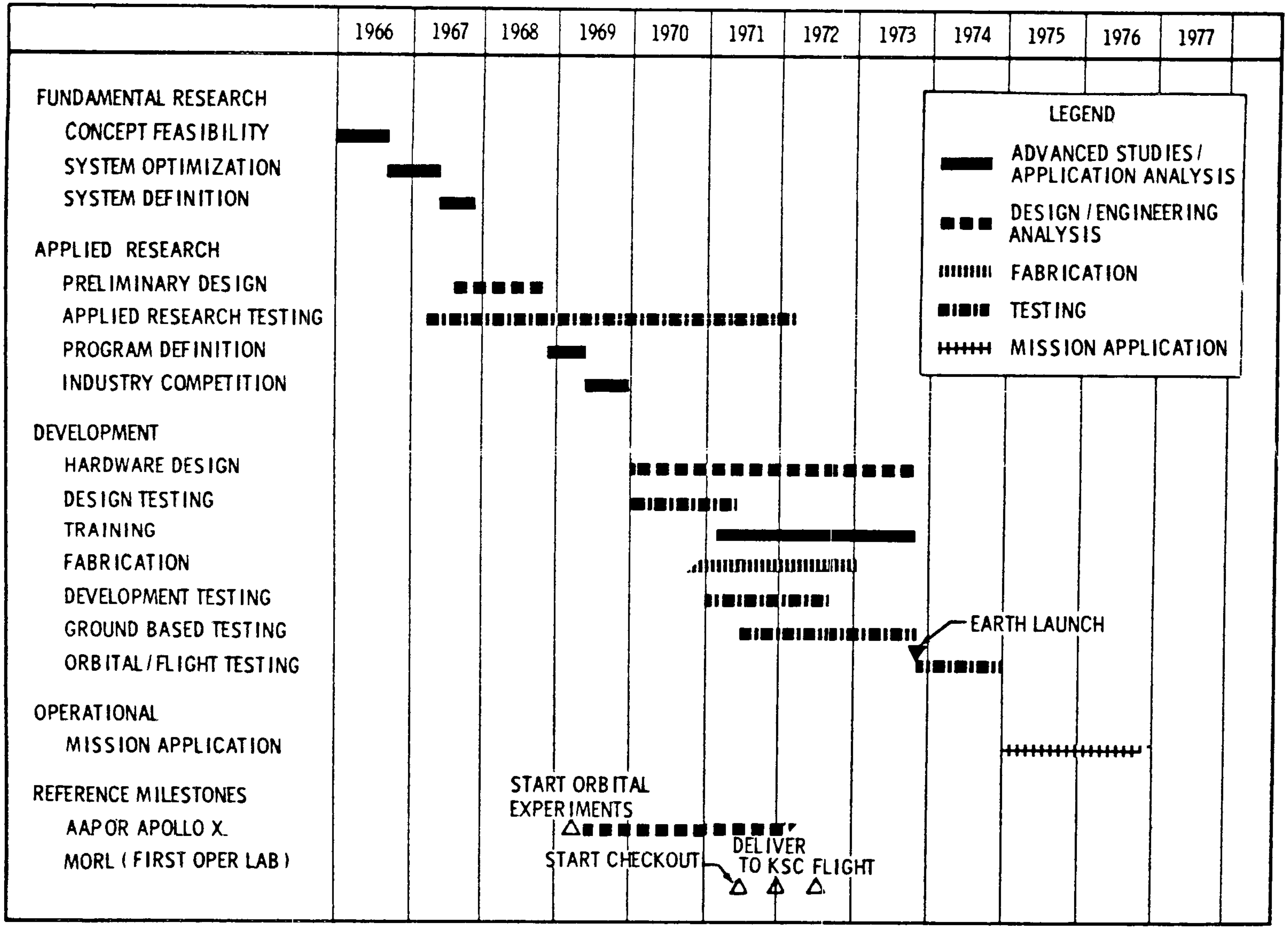

Figure 7.1-1: INITIAL OLF RDT&E PROGRAM SCHEDULE

half of 1972. This schedule requirement is not supported by the current SCALE study phasing, however, and the checkout equipment go-ahead should be accelerated to support this. Major related MORL and Apollo "X" schedule milestones have been referenced on the program schedule to show how these programs support OLF. Apollo "X" for ORL experimentation and MORL as a basic spacecraft element. Should checkout equipment or other elements of OLO not be available timewise, or be restricted by funding allocations, the development times for OLF from concept feasibility may be generalized in terms of time from go-ahead.

The RDT&E program schedule for the initial OLF baseline concept presented in Figure 7.1-1 shows a development requirement of approximately 4 years from hardware go-ahead to OLF launch, and a requirement of approximately 9 years from subsequent engineering studies to OLO planetary mission application. This is generally a normal RDT&E program with emphasis on orderly development and systematic solution of technical problem areas. However, to support program requirements, ORL experiment development which is a part of applied Research testing, is required concurrent with the fundamental research and development phases. Experiement schedules are displayed in Paragraph 7.1.3.2. In terms of the AOLO study package framework, the present study is considered to have carried the orbital launch facility development through the advanced study phase.

This schedule was derived in the following manner. First, all activities required to evolve the OLF system were identified, i. e., analysis, design, fabrication, testing and training. Then key milestones in the program were postulated, giving a time frame reference for the program. Representative times were assigned to each of the identified RDT&E activities and these events were then integrated into the master schedule that included the complete initial OLF RDT&E development phases. Four major spacecrafts are needed to satisfy the requirements for development and operational deployment. The four spacecrafts provide a unit for structural and dynamic testing, a flight unit, a flight backup unit, and a proof test unit. The test sequence and time phasing of these spacecrafts is portrayed on the preliminary OLF test plan schedule, Figure 7.1-7. This program schedule does not include reliability testing as a separate task, as reflected in the LTV BD-1 example, due to a Boeing recommended reliability and test approach that integrates reliability testing with ground-bases and development testing as explained in the reliability plan, Paragraph 7.1.6.

Subsequent schedule study efforts should examine the feasibility of increasing the quantity of launch umbilical towers at KSC to effect flow time reduction for staging orbital launch operation and identify in more detail the ORL experiments and the orbital acceptance testing required.

7.1.2 Design and Development Plan. - The design phase evolves the definition of specifications and fabrication drawings for the facility, ground support equipment and operational requirements, while the objective of the development phase will be to prove that the design does in fact comply with the requirements and specifications. The two activities of design and development are intimately related and one phase follows the other in an iterative progression. A general summary of the design and development activities are shown on Figure 7.1-2 with the required system tasks identified in Paragraph 7.1.2.3, Systems Design and Development.

7.1.2.1 Design and Development Approach - The objectives of the orbiting launch facility and the orbiting launch operations have defined broad design requirements, which include extended operational life, manned capability, support of manned Venus or Mars missions and highly reliable operations. The design plan will achieve these requirements by applying the following basic principles.

- Optimum use of existing qualified hardware, specifically MORL and Apollo systems.
- Design for shirtsleeve environment.
- Manned maintenance and repair.
- Design for flexibility and growth.
- Spares and logistics capability.
- Redundancy for life support and environmental control.

7.1.2.2 Spacecraft Design and Integration. - The present study has carried OLF development through the advanced study phase in terms of the AOLO study package framework. Following is a general discussion of the progressive design and development activities by phase as shown on Figure 7.1-1. These activities are outlined in Figure 7.1-2, evolution of design and development.

FUNDAMENTAL RESEARCH

Concept Feasibility

The concept identified during the advanced study phase will be further analyzed with trade-off studies to evaluate the technical, schedule and cost feasibility of the selected concept. Orbiting Research Laboratory experiments in support of the OLF development will be defined and justified in detail including resource requirements. The experiment plan is identified in Paragraph 7.1.3.2.

System Optimization

In system optimization a mission is selected and defined, cost effectiveness studies and trade-offs conducted, and a vehicle concept(s) selected for continuing study. Performances attained are compared to requirements resulting in a technical evaluation of the selected concept (s). In the system optimization phase, the

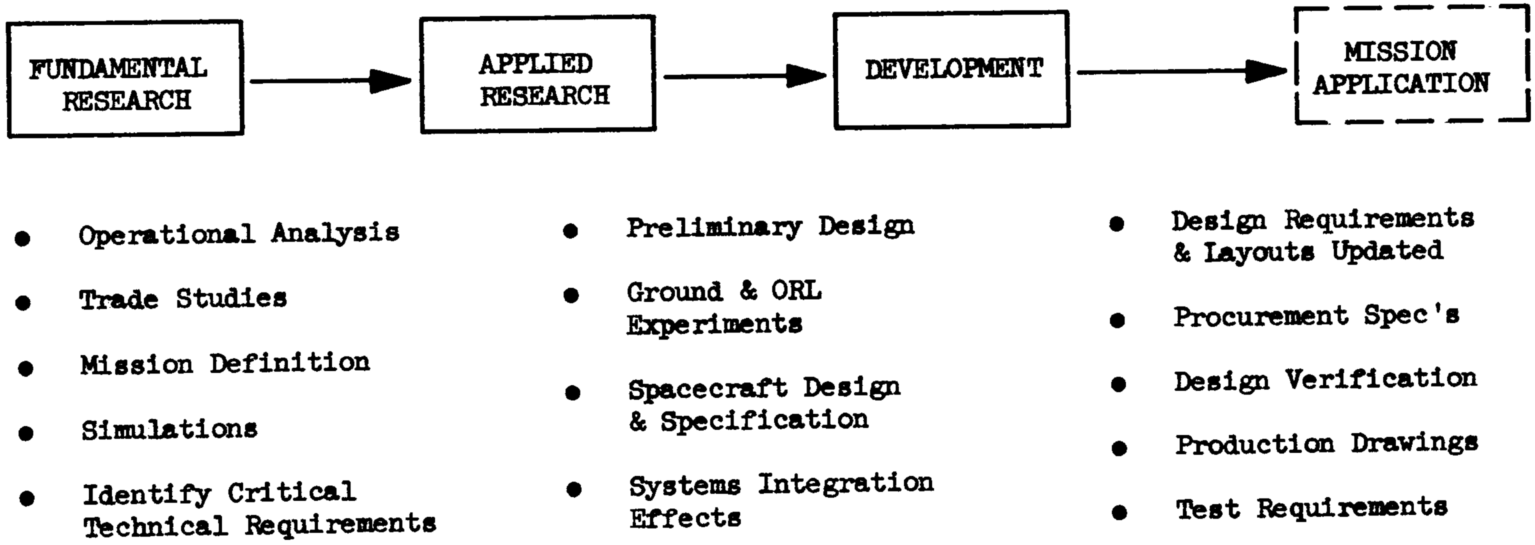

- Operational Analysis
- Trade Studies
- Mission Definition
- Simulations
- Identify Critical Technical Requirements

- Preliminary Design
- Ground & ORL Experiments
- Spacecraft Design & Specification
- Systems Integration Effects

- Design Requirements & Layouts Updated
- Procurement Spec's
- Design Verification
- Production Drawings
- Test Requirements

Figure 7.1-2: EVOLUTION OF DESIGN AND DEVELOPMENT intensive effort to identify critical advance technology requirements, including ORL experiments, which began in the advanced study phase and subsequently expanded and intensified in the system feasibility stage, is continued and concluded.

System Definition

The system definition phase begins with the conceptual design selected in system optimization. This conceptual design is intended to serve as a reference configuration during all preliminary program definition activities. Based on an operational analysis of the OLF mission sequence and the effects of other OLO vehicles an evaluation and definitionof the selected conceptual design will be established. Concurrently, formulation of an advanced technology program plan will be initiated (including ORL experiments), based on the critical technical requirements isolated in the previous phase. As this plan is developed for selected experiments, the applied research phase is initiated. On completion of the vehicle conceptual definition a preliminary estimate will be prepared of the funding required to develop and operate the system over its expected lifetime.

APPLIED RESEARCH

Preliminary Design

Concurrent with resolution of the technical problems in the applied research testing phase, preliminary design of the OLF and supporting ground equipment are initiated in which the design fundamentals of the selected concept are analyzed to determine interface problems and to specify a tentative design approach. The preliminary design includes a preliminary spacecraft and systems definition plus a preliminary specification. These preliminary designs serve as reference points for the detailed planning activities in the program definition phase.

Applied Research Testing

The key early design and development activity is the applied research testing activity. This is essentially an advance research or technology program in which techniques, processes, and hardware are developed and their feasibility demonstrated both by ground base and orbital testing. The applied research testing activities are described in the Paragraph 7.1.3, Research Program.

Program Definition

The purpose of the Program Definition Phase is to formulate a definitive spacecraft specification, system specifications, supporting plans and funding estimates which can be utilized by the government in formulating the hardware program requests for proposals, in planning facility construction, in forecasting program budget requests, and negotiating contracts. In this phase the program for development and mission application of the vehicle is established and defined and eight major implentation program plans will be formulated. In addition, design criteria is established for all the major facilities required in the Orbital Launch Facility hardware program. The major detail implementation plans to be formulated are:

Design and Development Plan

Production Plan

Spacecraft and Systems Test Plan

Mission Applications Plan

Spacecraft Support Plan

Facilities and Support Equipment Plan

Management and Control Plan

Funding Plan

DEVELOPMENT

Hardware Design

Detail design of the OLF and its supporting GSE begins immediately on receipt of the hardware go-ahead authorization. Specification requirements for MORL and its systems are released early in the phase and the initiation of design release for the first vehicle, a structural test unit, is estimated at approximately 8 months after go-ahead, with the critical design review to be accomplished approximately 12 months after go-ahead. The systems design and development tasks are defined in paragraph 7.1.2.3, Systems Design and Development.

Design Testing

To verify the OLF configuration and the overall flight vehicle in both launch and deployed loads, a series of scale model tests will be conducted early in the development cycle to establish performance characteristics of the design. These tests will include wind tunnel, acoustic, vacuum, surface heating, and material tests. Results of this testing are fed back into the design activities.

Development Testing

The objective of development testing is to establish the validity of systems design and systems integration by demonstrating that parts, components, assemblies, subassemblies, and systems of the OLF and its ground support equipment meet the following criteria:

- Configuration of design
- Functional operation within specification of all expected environments and combinations of environments.
- Absence of harmful interactions between components and systems.

To achieve these objectives, breadboards, tests, mockup, and prototype testing will be conducted on operating subsystems and systems during their design and development cycle. Development testing has been identified to verify the following systems requirements:

System	Verify
Attitude control and stabilization	Reaction jet location
Environmental Control/Life Support	Contaminant control
Data management	Antenna modifications
OIF structures	Meteoroid protection, seals and structural extension
OIF mechanical equipment	Umbilical swivel joints and gearing operations

7.1.2.3 Systems Design and Development. - Systems have been selected based upon optimum use of planned or existing configurations and concepts from the MORL and Apollo programs. Following is a general discussion of the additional design and development tasks required to adapt these systems to the OIF application. These have been further divided into first, those tasks considered to be major in nature because of technological problems or size of effort required, and second, those additional tasks of a more routine nature but still necessary in the final development of the system.

Structural System

The structural system is composed of three major subsystems: (1) an external shell which provides thermal control and meteoroid protection and a pressure shell carrying the flight loads; (2) a hub section which is joined to the external shell; and (3) two modified MORL systems. The structural system integrates the structural, thermal balance control, and meteoroid and radiation shield design for the OIF.

The major tasks in the design and development of this system are:

- Analysis and test of extended exposure on thermal coating, seals, gaskets, bearings and diaphragms.
- Analysis and test of meteoroid penetration on radiators, external shells, hatch and docking ports.
- Leak detection and repair.
- Design for the telescoping structures.
- Structural proof testing including pressure, dynamic, and static testing.

Additional tasks of a more routine nature necessary in the design and development of this system are:

- Heat control.
- Provide transtage separation joints.
- Boost venting.

- MORL securing structure for boost phase.

Mechanical Systems

The principal mechanical systems are the orbital umbilical and the telescoping mechanisms.

The orbital umbilical provides electrical, liquid and gaseous requirements to the orbital launch vehicle.

The major tasks in the design and development of the umbilical are:

- Provide leak proof swivel joints for the liquids and gases.
- Provide motors and gear boxes for deployment.

Additional tasks of a more routine nature necessary in the design and development of this system are:

- Packaging of the approximate 16 umbilical lines.
- Design a stowable launch configuration.
- Provide a manned EVA steerable capability to direct the umbilical pads mating with the OLV pads.
- Provide for removal and discarding of umbilical fairing.

The telescoping mechanisms consist of the cabling and the bottled nitrogen to control and extend the MORLs, the tube and its elevator equipment. The major tasks required in their design and development are:

- Provisioning of MORL actuation and control mechanisms.
- Development of seal installation and checkout techniques and procedures.

An additional task of a more routine nature necessary to the design and development of this system is:

- Provisioning elevator actuation mechanisms, tube structure and cabling.

Electrical Power System

The Brayton cycle isotope power system concept planned for MORL will be used with configuration modifications for OLF. Batteries will be used for backup power and may be utilized in the OLF activation. The major tasks in the design and development of this system are:

- Installation in the hub section of the OLF.
- Design of radiator areas for heat reflection in the cylindrical sections of the OLF.

- Provide radiation shielding for extravehicular activity.

Additional tasks of a more routine nature necessary to the design and development of this system are:

- Establishing and verifying detail power profile.
- Provisioning for electrical outlets in the center sections.
- Provisioning for EVA electrical requirements.
- System design to remove excess heat during the launch phase prior to radiator activation.
- Perform crew radiation exposure analysis.

Guidance and Navigation

The OLF requirements and hardware system is planned to be the same as MORL with the additions of an inertial measuring unit, a sextant and a scanning telescope similar to those on Apollo. The additional subsystem provides backup capability for rendezvous and autonomous navigation. The major design and development task of this system is:

- Integration of the backup rendezvous and docking control capability.

Additional tasks of a more routine nature necessary to the design and development of this system are:

- Integration of the autonomous navigation capability with the basic G & N system.
- Design for mounting the scanning telescope, sextant and inertial measuring unit.

Attitude Stabilization and Control System

The MORL system will be used but will require relocation of the reaction control system and some changes to the control logic. The major design and development tasks of this system are:

- Locate and orient the reaction motors.

An additional task of a more routine nature necessary to the design and development of this system is:

- Provide control of reaction control jets of OLO docked elements by integration with the OLF stabilization and control system.

Environmental Control/Life Support System

The MORL system with minor modifications will provide the EC/LS for the MORLs, hangar and experiment bays, hub compartments and the elevator tubes. Modifications to the air distribution system will be required and possibly to the atmospheric contamination removal subsystem. The major design and development tasks of this system are:

- Determine if additional contaminant control is required due to the OLF volume.
- Analysis and testing of exposed area materials, and the outgassing and the vaporization of lubricants for effect on atmospheric contamination.

Additional tasks of a more routine nature necessary to the design and development of this system are:

- Provide additional air circulation equipment and controls.
- Provide bottled nitrogen for MORLs extension and oxygen and nitrogen for the initial pressurization of the experiment and hangar bays, hub and elevator tube and MORLs.
- Provide monitoring capability to determine hazardous conditions of contamination, temperature and pressure.
- Provide umbilical life support connections in each compartment.
- Provide valving for control of over-pressurization.
- Analysis and testing for noise control of ducts and rotating equipment.
- Sizing of the oxygen regeneration design for OLF.
- Analyze and test a trampoline alternate to the centrifuge for physiological conditioning.

Checkout and Monitor System

The OLF checkout and monitoring functions are accomplished by the on-board automatic checkout equipment. In addition, an analog multiplexer and analog/digital converter will be required by the OLF measurement system and will be provided within the checkout equipment to format data for entry into the checkout computer. The major design and development tasks of this system are:

- Analyzing and provisioning of OLF checkout and monitoring design requirements to the checkout equipment contractor.
- Identifying and providing software programming for the interface requirements with the checkout equipment.
- Simulation programs for the testing of OLF and checkout equipment interfaces.

An additional task of a more routine nature necessary in the design and development of this system is:

- Electrical interference testing.

Data Management System

The data management system comprises orbital data editing and formulating for OLF-Earth communication link and ground network. The communication equipment is basically the same as required for the MORL system with the exception of antenna configurations. The editing and formulating requirement will be provided by software. The ground network would consist of a minimum of three stations to provide a once-per-orbit communication capability. The major design and development tasks of this system are:

- Identify, simulate and provide software programming for data editing and formulating.
- Analyze and design ground network requirements including OLF receiving and transmitting, and multiple high speed and teletype data link between each ground station and mission control center.

Additional tasks of a more routine nature necessary in the design and development of this system are:

- Electrical interference testing.
- Conduct antenna tests and design antenna configurations.

Ground Support Equipment

The ground support equipment envisioned for the OLF is influenced by two major factors. The first is that the onboard checkout equipment provides the basic ground and orbit system checkout, and fault isolation, and contains selfchecking features, and, second, that a significant portion of the servicing, auxiliary, handling and transportation requirements can be accomplished using then existing Apollo and MORL configurations or concepts. It is anticipated that designs will be required for a new OLF transporter cradle and handling equipment, a modified MORL transporter, cooling for checkout operations, a OLF-MORL mating fixture, miscellaneous electrical adaptors, an electrical test load bank and electrical power supply support.

Test equipment at the subsystem, drawer and system level is assumed to exist on MORL or Apollo and will be used with modifications as required and supported by general purpose test equipment.

Interior Equipment Installations. - The crew and equipment installations includes the arrangement and installation of all items inside the OLF that are monitored, activated, or otherwise directly used by the crew. This task includes the provisioning for items such as: electrical power equipment, guidance and navigation, attitude control and stabilization, environmental control/life support, checkout and monitoring, data management, recreational equipment, loose equipment installations, experimental provisions, spares and expendables, etc. The design and development major task is:

- Provide a mockup to study the habitability, work accommodation envelopes, traffic flow, accessibility of critical areas and flexibility of arrangement.

Additional tasks of a more routine nature necessary in the design and development of this system are:

- Optimize restraint and locomotion techniques.
- Provide lighting configuration and fixtures.
- Optimize component location and evaluate access for installation and maintenance.

7.1.3 Research Program.

7.1.3.1 State of the Art Identification. - A major objective in the conceptual design selection of OLF was to use developed technology and hardware. The use of that approach and the selected preassembled design minimizes research requirements, a prime characteristic of the OLF. The use of MORL configuration or concept with generally only minor variations of the structure and general arrangement and retention of the on-board systems concepts, is an example of the use of developed technology and hardware. As a result, all selected systems and techniques, presently identified, will be within the required state-of-the-art, except for those dependent on ORL experiments, which are defined in Paragraph 6.3, and scheduled in Paragraph 7.1.3.2, Experiment Plan. It should be noted that the research requirements established represent the needs apparent at this level of study. In progressive preliminary and detailed OLF design studies, with their accompanying detailed systems and operational analysis, it can be expected that OLF developmental problems requiring research will become much more evident.

7.1.3.2 Experiments Plan. - The ORL experiments will provide basic scientific and engineering information which can only be learned in orbit. This includes information about the space environment, its utilization and effects upon the conceptual OLO system, the OLF spacecraft concept, personnel activities, and operational and logistics techniques necessary to design and operate an OLF. This section presents the integrated timephased plan for development of 21 ORL experiments, assigned by the OLO Experimentation Committee for OLF study formulation. These experiments are divided into the following categories: Personnel Transfer/Artificial Gravity; Cargo Transfer/Artificial Gravaty; Cargo Transfer/Zero Gravity; Erection and Assembly; Maintenance and Repair; and Launch.

While the 21 experiements referred to above and described in Paragraph 6.3 may not necessarily be those actually conducted, the six categories are representative of the class of studies which will be required for OLF development. These experiments are not limited to orbital launch facility application, but also directly affect other elements of the orbital launch operations program. Experiments formulated by Lockheed or Ling-Temco-Vought for various experiment categories will also have an effect on OLF development. For each of these categories and their individual experiments, the development program may be broken down into the following basic activities:

- Definition of experiments and establish integrated experiment plan.
- Equipment design, development test, integration and checkout.
- Procedure synthesis, integration and checkout.
- Crew training.
- Final checkout of equipment, procedures and crew.
- KSC checkout.
- Orbital based testing and data analysis.

A key phase of the experiment plan will be the experiment planning phase which will take the experiment ideas formulated in the advanced study phase and evolve detail experiments definitions, justifications, and an integrated orbital launch facility and orbital launch operations experiment plan. This experiment planning must be must be conducted concurrently with the conceptual feasibility, system optimization, and system definition phases of fundamental research as portrayed in Figure 7.1-1. This activity is keyed to support timely experiment development which will provide basic OLF design data and operational procedures and techniques.

Experiment development starts upon the completion of experiment definition and the establishment of an integrated experiment plan. Based upon the current level of experiment identification, standard flow time development schedules portray the most realistic present schedule picture. As a result normal, simple and difficult schedules for experiments were developed as shown in Figure 7.1-3.

The normal schedule flow times were selected by an analysis of an independent estimate of activity times, a review of technology development flow times presented in the Interplanetary Mission Support Requirements Study, Contract No. NAS 9-3441, and a review of experiment execution flow times presented in the Manned Earth Orbital Experiment Program study for AES by IBM at Bethesda. Flow times for the simple and difficult schedules were postulated, based on their estimated complexity variance from the normal schedule, in equipment design, fabrication or checkout or checkout activities.

An experiment development schedule for each of the 21 experiments is presented in Figure 7.1-4. These schedules were developed by first determining when, by year and quarter in the OLF development cycle, the individual experiment data would be required. The next step was to determine the complexity of development effort required of the individual experiments and to select a simple, normal or difficult schedule. The development flow times are projected from the data demand date and include extended orbital testing when required. The priority of the experiments and the estimated development complexity are tabulated in Paragraph 6.3, Definition of ORL Experiments. As shown in Figure 7.1-4, experiment development is required concurrent with fundamental research for approximately 3/4 of a year on a limited basis and for 2-$\frac{1}{4}$ years concurrent with hardware development. The last 1 to 1-1$\frac{1}{2}$ years of concurrency with hardware development is primarily for orbital support equipment and orbital procedures development.

7.1.4 Preliminary Manufacturing Plan. - The objective of the preliminary OLF manufacturing plan is to define tooling concepts, fabrication and assembly flows, facility and equipment requirements, manufacturing or quality control developments, and provide a basis for costing. The basic feature of this plan is the use of either the existing Saturn S-IC or S-II manufacturing facility and major tooling as explained in Paragraph 7.1.4.2 and 7.1.4.3. Since Boeing is most familiar with the Saturn S-IC, that program's facilities and tooling have been used as applicable with modifications to the OLF.

The ground rules and assumptions in developing the manufacturing plan are:

- That the OLF is the structure between the injection stage and the Apollo Command Module.
- That tooling facilities, processing techniques, and manpower skills already developed by various space programs (Apollo, MORL, Saturn, etc.) will be used to the maximum extend practical.
- A facility (i. e., Saturn S-IC or S-II) and associated tooling will be

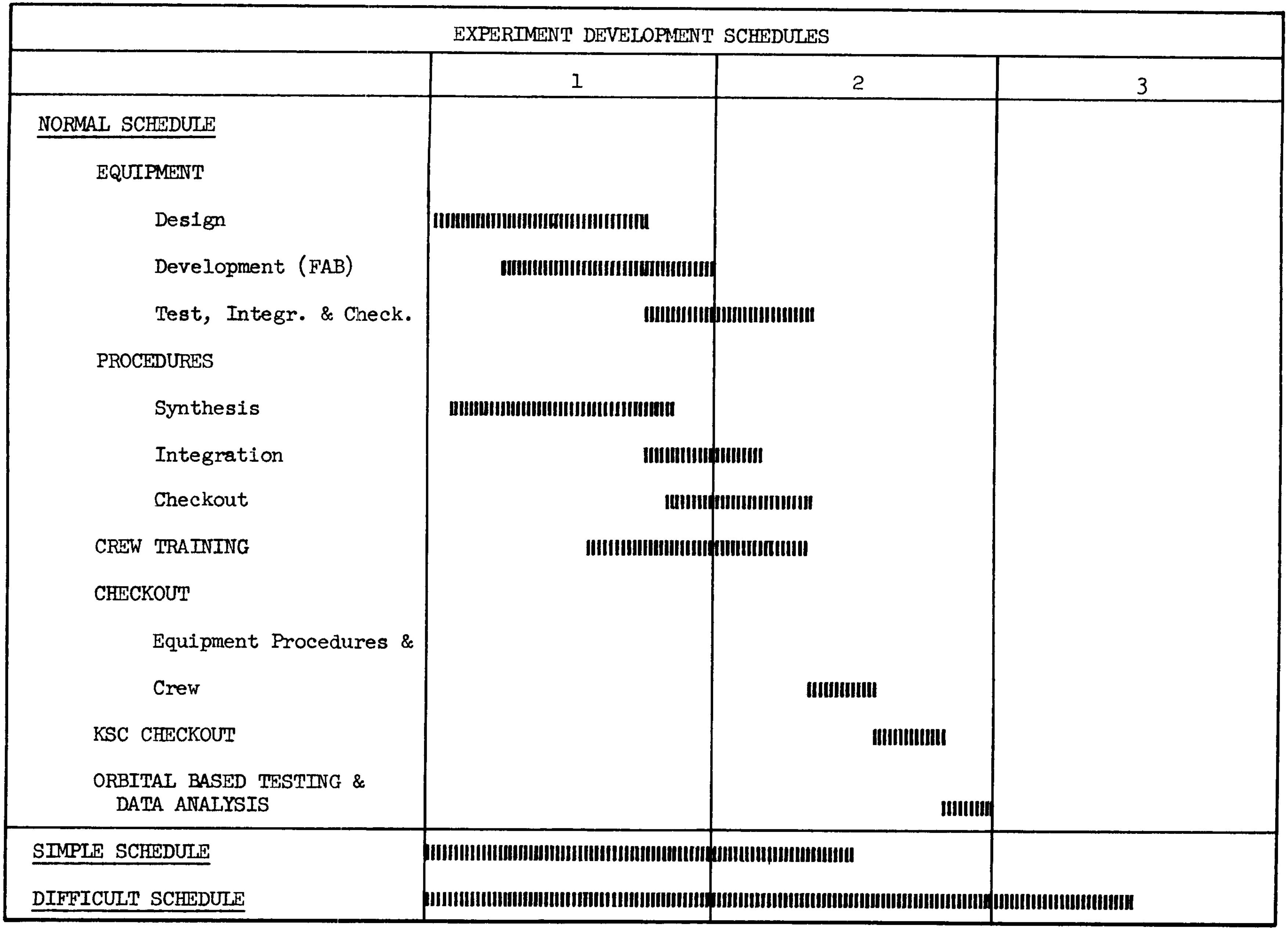

Figure 7.1-3: EXPERIMENT DEVELOPMENT SCHEDULE

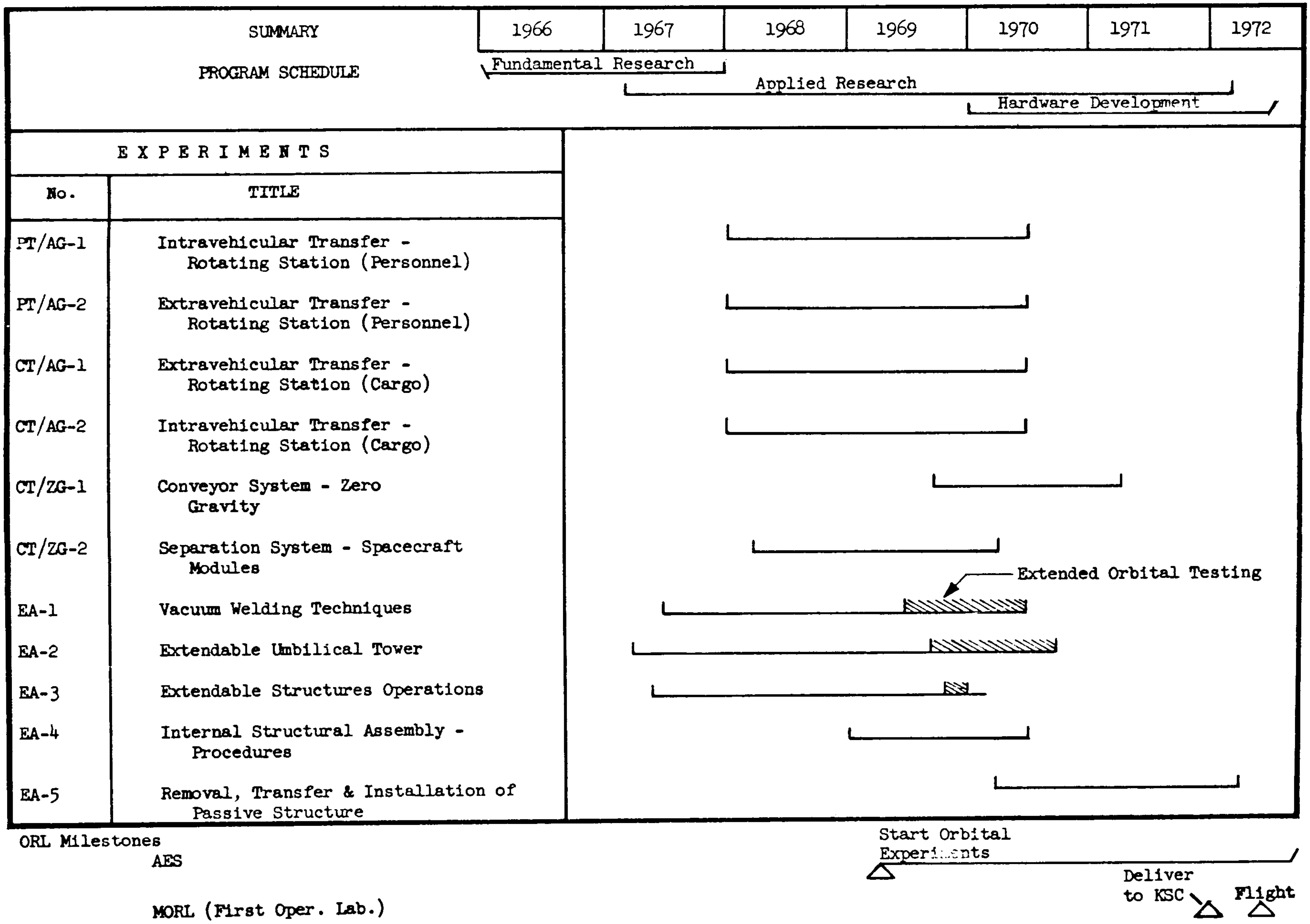

Figure 7.1-4: ORL EXPERIMENT DEVELOPMENT SCHEDULE

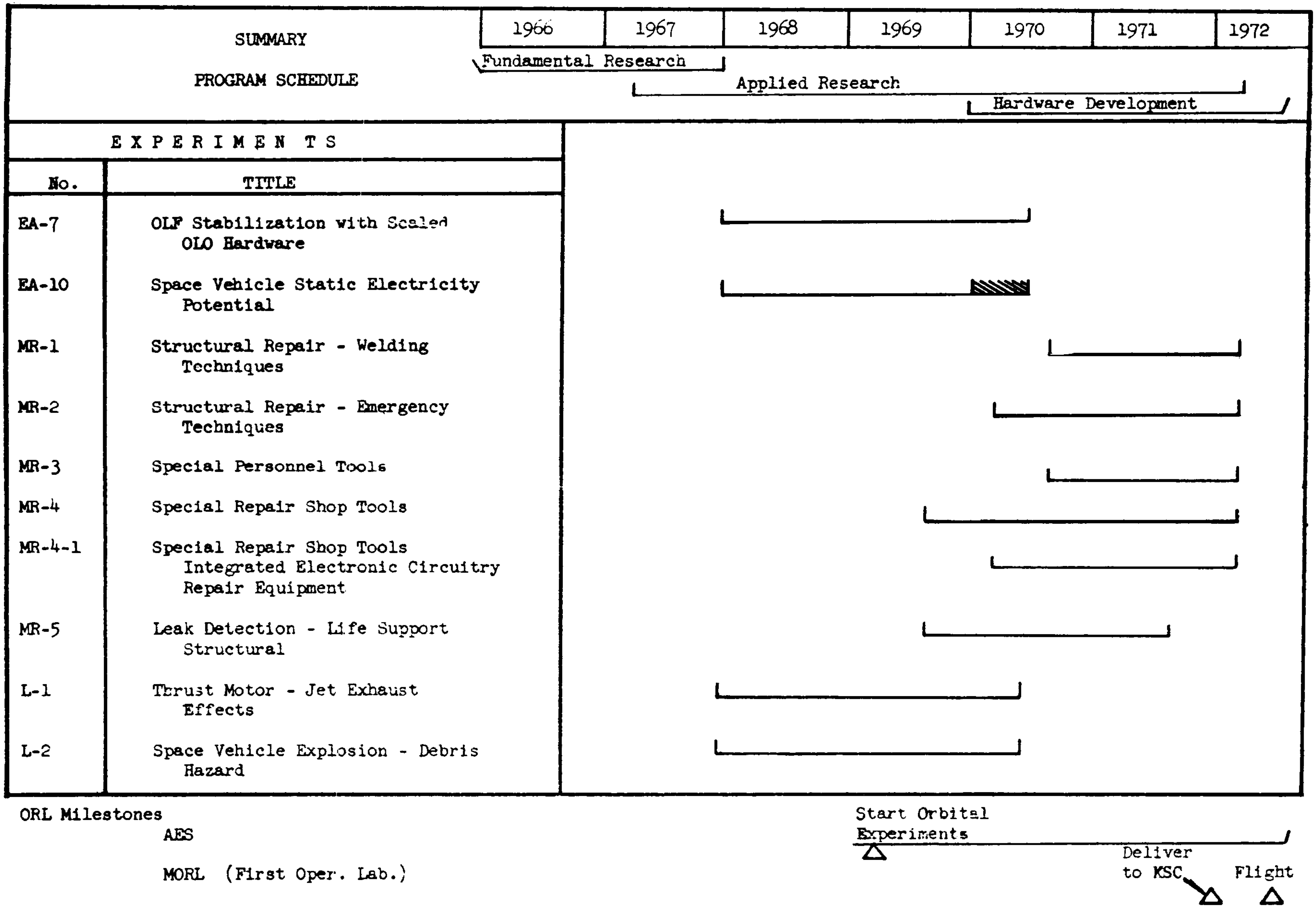

Figure 7.1-4: ORL EXPERIMENT DEVELOPMENT SCHEDULE (CONTINUED)

available for fabrication, assembly, and test operations.

- That major manufacturing or quality development programs for tooling, facilities, manufacturing or quality processes are assumed to have been already developed on existing programs at the time of OLF. Any new processes that might be considered would be justified on the basis of cost or program schedule risk.

- That a production break occurs between the MORL and the OLF structure. The production break for both the structural shell and the access tunnels is in a common station plane. Also, the OLF structure side of the production break contains the seal joint, the extension sliding guides, tracks, and sabots for the telescoping access tunnels as well as the telescoping structural shells. Hence, the OLF structure contractor has the necessary production control of the alignment and seal problems of the telescoping access tunnels and structural shells.

Manufacturing Schedules

Five equivalent OLF structural units are required; a flight unit, a back-up flight unit, a proof test unit, a combination structural test and dynamic test unit, and portions equivalent to one unit for system and subsystem structural testing. It is assumed that the limited number of spacecraft required will allow integrating the fabrication, assembly, and test of the OLF with the Saturn S-IC (or S-II) program. Future study phases of the OLF will require a detailed analysis of this aspect including the influence of possible Saturn S-IC reusable launch configurations. The flow time for tool fabrication has been defined as 8 months and the flow time for fabrication through final assembly as 12 months.

7.1.4.1 Make or Buy Plans. - Detailed make or buy plans will be the subject of future study phases of the OLF development. For purposes of this manufacturing study the following major breakdown has been assumed:

System	Make By
MORL Modules	MORL Contractor
Apollo C/M and LES	Apollo Contractor
Basic OLF Structures & Mechanisms (That portion between the 2 MORL Modules)	OLF Contractor
OLF to Apollo C/M Interstage	OLF Contractor
Electrical Power	MORL Subcontractor
Guidance and Navigation	MORL and Apollo Subcontractors
Attitude Control & Stabilization	MORL Subcontractors

System	Make By
C/O and Monitoring	Checkout Equipment Contractor
Environmental Control	MORL Subcontractor

Most of the hardware required for the systems above will be space flight qualified. Criteria for actual subcontractor and supplier selection during the development program will be: performance capability, acceptable deliveries, and lowest costs.

7.1.4.2 Tooling Plan. - The tooling requirements of this program are determined by tolerance requirements rather than production rate or quantity of units to be manufactured. The controlling tooling requirements are; the alignment of the telescoping structures; the fit-up necessary to achieve high quality welded joints of thin-gaged pressure shells; and interfaced joint control with other hardware items such as injection stage, the Apollo Command Module, and umbilical connections with the OLV.

The following tooling features based on the S-IC Boeing Tooling Plan, Document D5-12562, have been identified and provide significant use of existing skills, facilities, and special equipment thus minimizing cost:

- The head shape selected for the pressure bulkheads is that used on the Saturn S-IC. This allows utilization of existing tank head tooling for fabrication operations including: bulge forming tools, trim tooling, weld and "X" ray. The original design and fabrication cost of this tooling was in excess of 150,000 manhours. Added to this saving is the use of developed processes and trained personnel. A detail utilization feasibilty and cost analysis of this approach was recently conducted for Apollo Extension System (AES), Extended Apollo Laboratory Module (EALM) studies.
- The center hub section will be assembled in the Saturn S-IC tank assembly tooling. Available facilities that can be used include weld and "X" ray equipment, cleaning and pressure test facilities.
- The final structure assembly will be fabricated in the Saturn S-IC vertical assembly tower positions.
- The existing Saturn S-IC shipping system will be used for shipment to NASA - MSFC, and the Cape.
- Tooling modifications would consist of adapter spacers to reduce from the 33-foot diameter of the Saturn S-IC to the 24 diameter of the OLF spacecraft.

7.1.4.3 Assembly, Test and Shipping Plan. - The general plan based on the Boeing S-IC Stage Manufacturing Plan, Document D5- 2561, is the following:

- Fabrication of details and subassemblies will take place at the Saturn S-IC (or S-II) fabrication facilities, where specialized equipment and facilities required for these operations are already available. Items will be shipped to the Saturn S-IC (or S-II) assembly plant for final assembly and test. In many cases existing shipping equipment will be utilized.

- Final assembly of the basic shell structure, the LOX tubing, telescoping access tunnels, and all otherprime contractor controlled items will be accomplished in the Saturn S-IC (or S-II) facility. This facility contains tooling and facilities for handling 33' dia. x 138' long Saturn S-IC structures including LOX tank and tube cleaning. Much of the investment in tooling and facilities can be utilized by rather simple addition of removable headers and spacers to adapt from the 33' diameter to the 24' diameter.
- The Saturn S-IC (or S-II) test facilities will be used to accomplish the prime contractor and MSFC conducted testing. The existing shipping concepts used for S-IC stages will also be utilized.
- Final assembly including joining the MORLs and systems installations and testing would be accomplished at theSaturn S-IC (or S-II) facility.

A sequence flow diagram and operations description for final assembly is shown in Figure 7.1-5.

Manufacturing Development Plan

New manufacturing or quality control developments required for this program will be less than formany past programs due to the large amount of manufacturing technology development now being done in the space programs and required for other programs such as AES and MORL prior to OLF.

Although no specific manufacturing technology development programs can be identified at this time, it is probable that some will be required. Future OLF study programs will identify specific developments as further design information and processes become known. One interesting possiblity is the fabrication of one piece heads and side wall structure for the pressure vessel portion of the OLF spacecraft. Since this type of design would require a major revision of the overall designs and plans, it will have to be deferred for analysis to later study contracts.

7.1.5 Test Plan.

7.1.5.1 Test Summary and Approach. - The OLF Test Plan is portrayed on the Preliminary OLF Test Plan Flow, Figure 7.1-6 and the Preliminary Test Plan Schedule, Figure 7.1-7. A summary of the OLF hardware requirements is shown on Figure 7.1-8. These preliminary plans and schedules are to a level of detail consistent with the configuration definition and form a realistic baseline for present OLO and NASA plans.

The approach to OLF testing is based on the following assumptions and ground rules:

- MORL and Apollo will be operational prior to OLF

1

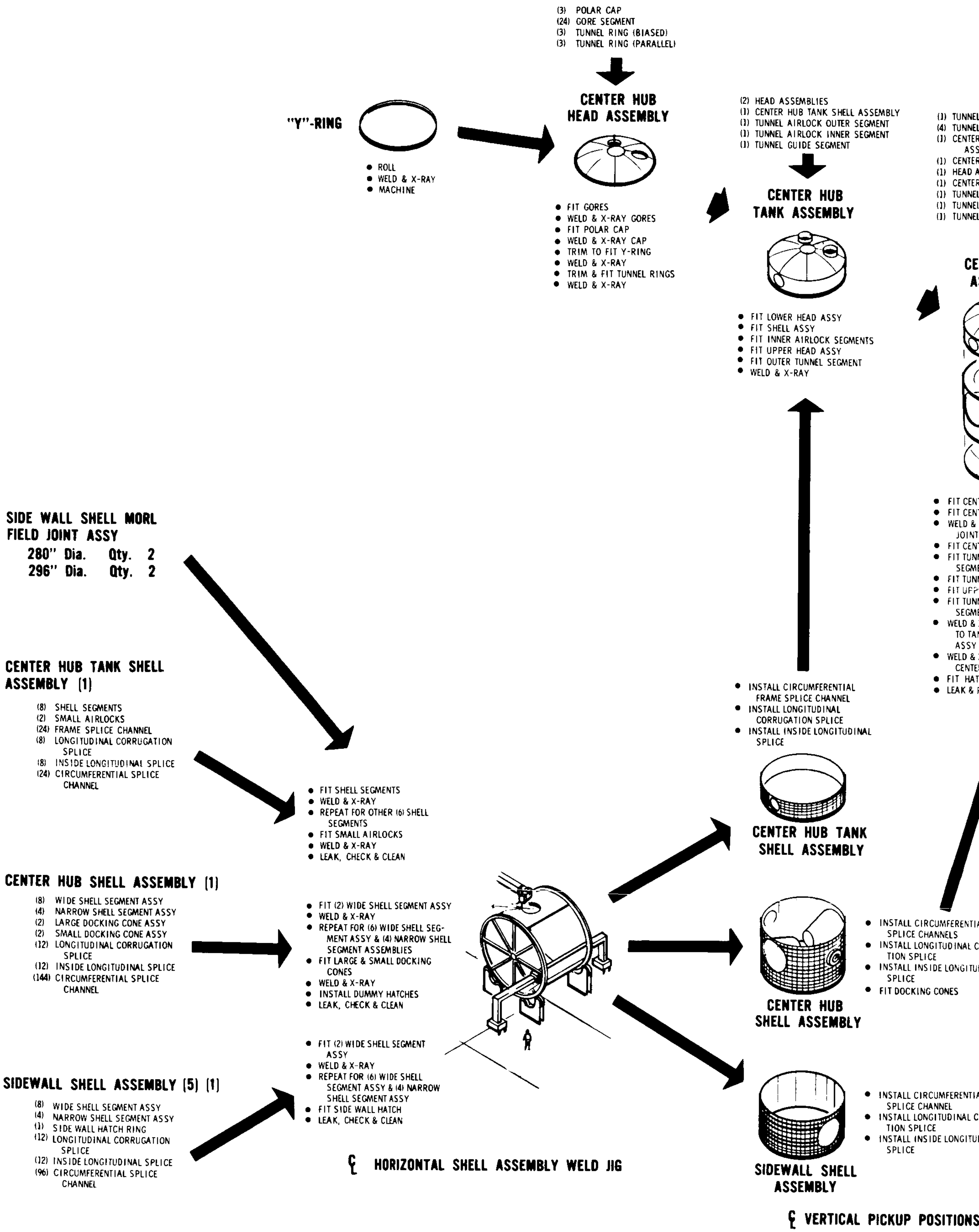

"Y"-RING

- ROLL
- WELD & X-RAY
- MACHINE

(3) POLAR CAP
(24) GORE SEGMENT
(3) TUNNEL RING (BIASED)
(3) TUNNEL RING (PARALLEL)

CENTER HUB HEAD ASSEMBLY

- FIT GORES
- WELD & X-RAY GORES
- FIT POLAR CAP
- WELD & X-RAY CAP
- TRIM TO FIT Y-RING
- WELD & X-RAY
- TRIM & FIT TUNNEL RINGS
- WELD & X-RAY

(2) HEAD ASSEMBLIES
(1) CENTER HUB TANK SHELL ASSEMBLY
(1) TUNNEL AIRLOCK OUTER SEGMENT
(1) TUNNEL AIRLOCK INNER SEGMENT
(1) TUNNEL GUIDE SEGMENT

CENTER HUB TANK ASSEMBLY

- FIT LOWER HEAD ASSY
- FIT SHELL ASSY
- FIT INNER AIRLOCK SEGMENTS
- FIT UPPER HEAD ASSY
- FIT OUTER TUNNEL SEGMENT
- WELD & X-RAY

(1) TUNNEL
(4) TUNNEL
(1) CENTER
ASS
(1) CENTER
(1) HEAD A
(1) CENTER
(1) TUNNEL
(1) TUNNEL
(1) TUNNEL

CE
A

- FIT CEN
- FIT CEN
- WELD &
JOINT
- FIT CEN
- FIT TUN
SEGM
- FIT TUN
- FIT UPP
- FIT TUN
SEGM
- WELD &
TO TA
ASSY
- WELD &
CENTE
- FIT HAT
- LEAK &

SIDE WALL SHELL MORL FIELD JOINT ASSY
280" Dia. Qty. 2
296" Dia. Qty. 2

CENTER HUB TANK SHELL ASSEMBLY (1)

(8) SHELL SEGMENTS
(2) SMALL AIRLOCKS
(24) FRAME SPLICE CHANNEL
(8) LONGITUDINAL CORRUGATION SPLICE
(8) INSIDE LONGITUDINAL SPLICE
(24) CIRCUMFERENTIAL SPLICE CHANNEL

- FIT SHELL SEGMENTS
- WELD & X-RAY
- REPEAT FOR OTHER (6) SHELL SEGMENTS
- FIT SMALL AIRLOCKS
- WELD & X-RAY
- LEAK, CHECK & CLEAN

CENTER HUB SHELL ASSEMBLY (1)

(8) WIDE SHELL SEGMENT ASSY
(4) NARROW SHELL SEGMENT ASSY
(2) LARGE DOCKING CONE ASSY
(2) SMALL DOCKING CONE ASSY
(12) LONGITUDINAL CORRUGATION SPLICE
(12) INSIDE LONGITUDINAL SPLICE
(144) CIRCUMFERENTIAL SPLICE CHANNEL

- FIT (2) WIDE SHELL SEGMENT ASSY
- WELD & X-RAY
- REPEAT FOR (6) WIDE SHELL SEGMENT ASSY & (4) NARROW SHELL SEGMENT ASSEMBLIES
- FIT LARGE & SMALL DOCKING CONES
- WELD & X-RAY
- INSTALL DUMMY HATCHES
- LEAK, CHECK & CLEAN

SIDEWALL SHELL ASSEMBLY (5) (1)

(8) WIDE SHELL SEGMENT ASSY
(4) NARROW SHELL SEGMENT ASSY
(1) SIDE WALL HATCH RING
(12) LONGITUDINAL CORRUGATION SPLICE
(12) INSIDE LONGITUDINAL SPLICE
(96) CIRCUMFERENTIAL SPLICE CHANNEL

- FIT (2) WIDE SHELL SEGMENT ASSY
- WELD & X-RAY
- REPEAT FOR (6) WIDE SHELL SEGMENT ASSY & (4) NARROW SHELL SEGMENT ASSY
- FIT SIDE WALL HATCH
- LEAK, CHECK & CLEAN

℄ HORIZONTAL SHELL ASSEMBLY WELD JIG

- INSTALL CIRCUMFERENTIAL FRAME SPLICE CHANNEL
- INSTALL LONGITUDINAL CORRUGATION SPLICE
- INSTALL INSIDE LONGITUDINAL SPLICE

CENTER HUB TANK SHELL ASSEMBLY

CENTER HUB SHELL ASSEMBLY

- INSTALL CIRCUMFERENTI
SPLICE CHANNELS
- INSTALL LONGITUDINAL C
TION SPLICE
- INSTALL INSIDE LONGITU
- FIT DOCKING CONES

SIDEWALL SHELL ASSEMBLY

- INSTALL CIRCUMFERENTIA
SPLICE CHANNEL
- INSTALL LONGITUDINAL C
TION SPLICE
- INSTALL INSIDE LONGITU
SPLICE

℄ VERTICAL PICKUP POSITIONS

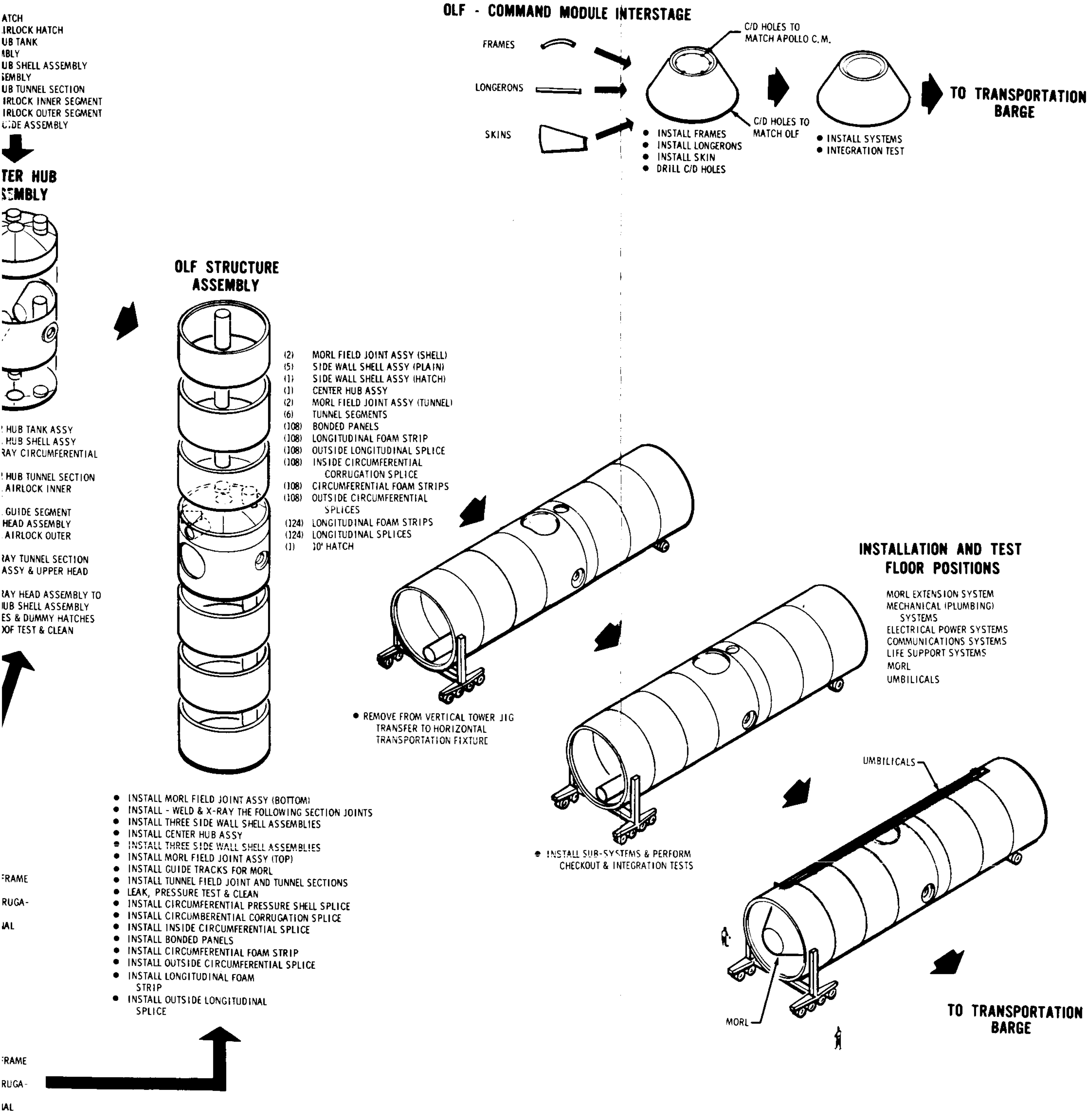

Figure 7.1-5:
OLF MANUFACTURING PLAN —
FINAL ASSEMBLY

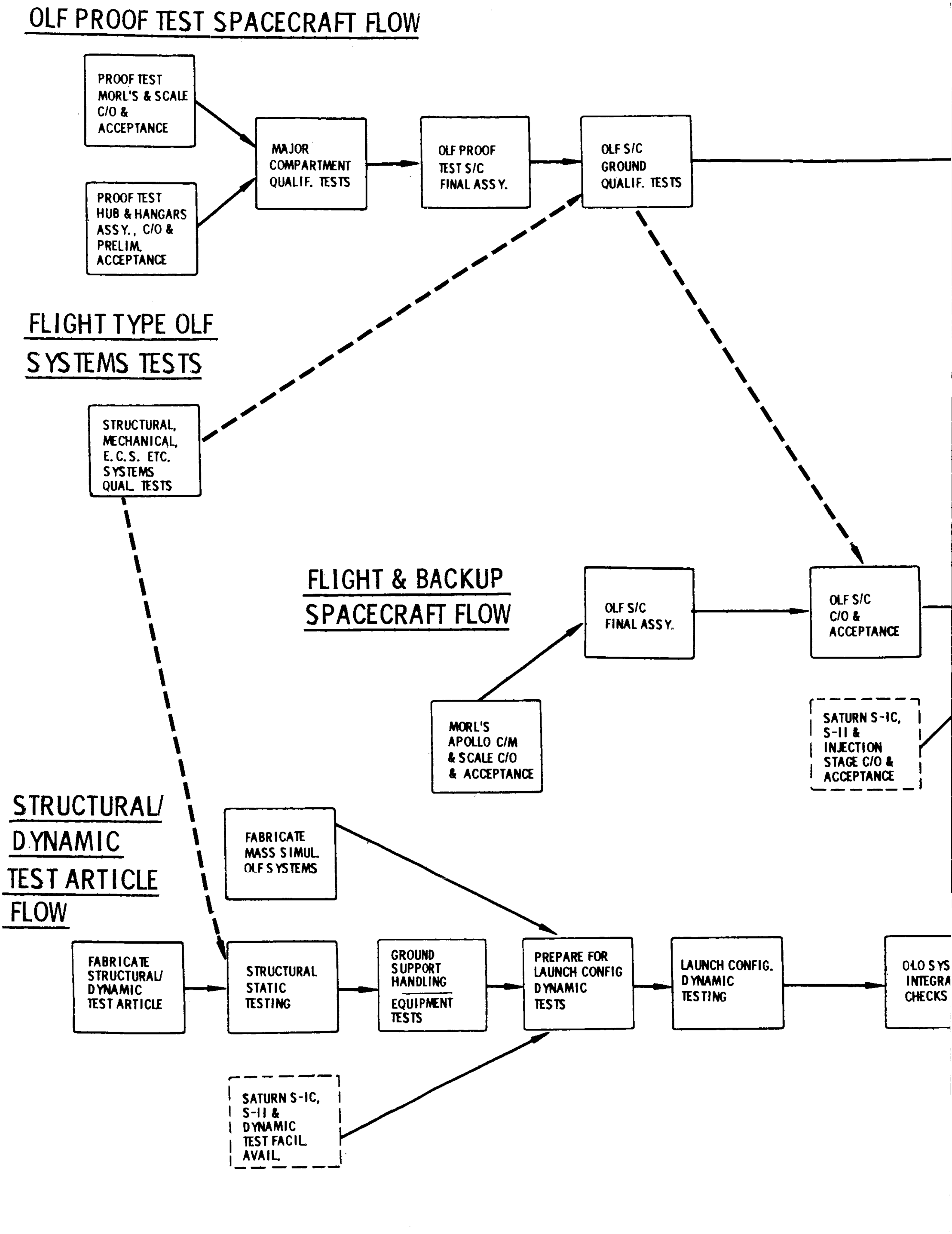
OLF PROOF TEST SPACECRAFT FLOW
PROOF TEST MORL'S & SCALE C/O & ACCEPTANCE
PROOF TEST HUB & HANGARS ASSY., C/O & PRELIM. ACCEPTANCE
MAJOR COMPARTMENT QUALIF. TESTS
OLF PROOF TEST S/C FINAL ASSY.
OLF S/C GROUND QUALIF. TESTS
FLIGHT TYPE OLF SYSTEMS TESTS
STRUCTURAL, MECHANICAL, E.C.S. ETC. SYSTEMS QUAL. TESTS
FLIGHT & BACKUP SPACECRAFT FLOW
OLF S/C FINAL ASSY.
OLF S/C C/O & ACCEPTANCE
MORL'S APOLLO C/M & SCALE C/O & ACCEPTANCE
SATURN S-IC, S-II & INJECTION STAGE C/O & ACCEPTANCE
STRUCTURAL/ DYNAMIC TEST ARTICLE FLOW
FABRICATE MASS SIMUL. OLF SYSTEMS
FABRICATE STRUCTURAL/ DYNAMIC TEST ARTICLE
STRUCTURAL STATIC TESTING
GROUND SUPPORT HANDLING EQUIPMENT TESTS
PREPARE FOR LAUNCH CONFIG DYNAMIC TESTS
LAUNCH CONFIG. DYNAMIC TESTING
OLO SYS INTEGRA CHECKS
SATURN S-IC, S-II & DYNAMIC TEST FACIL. AVAIL.

2

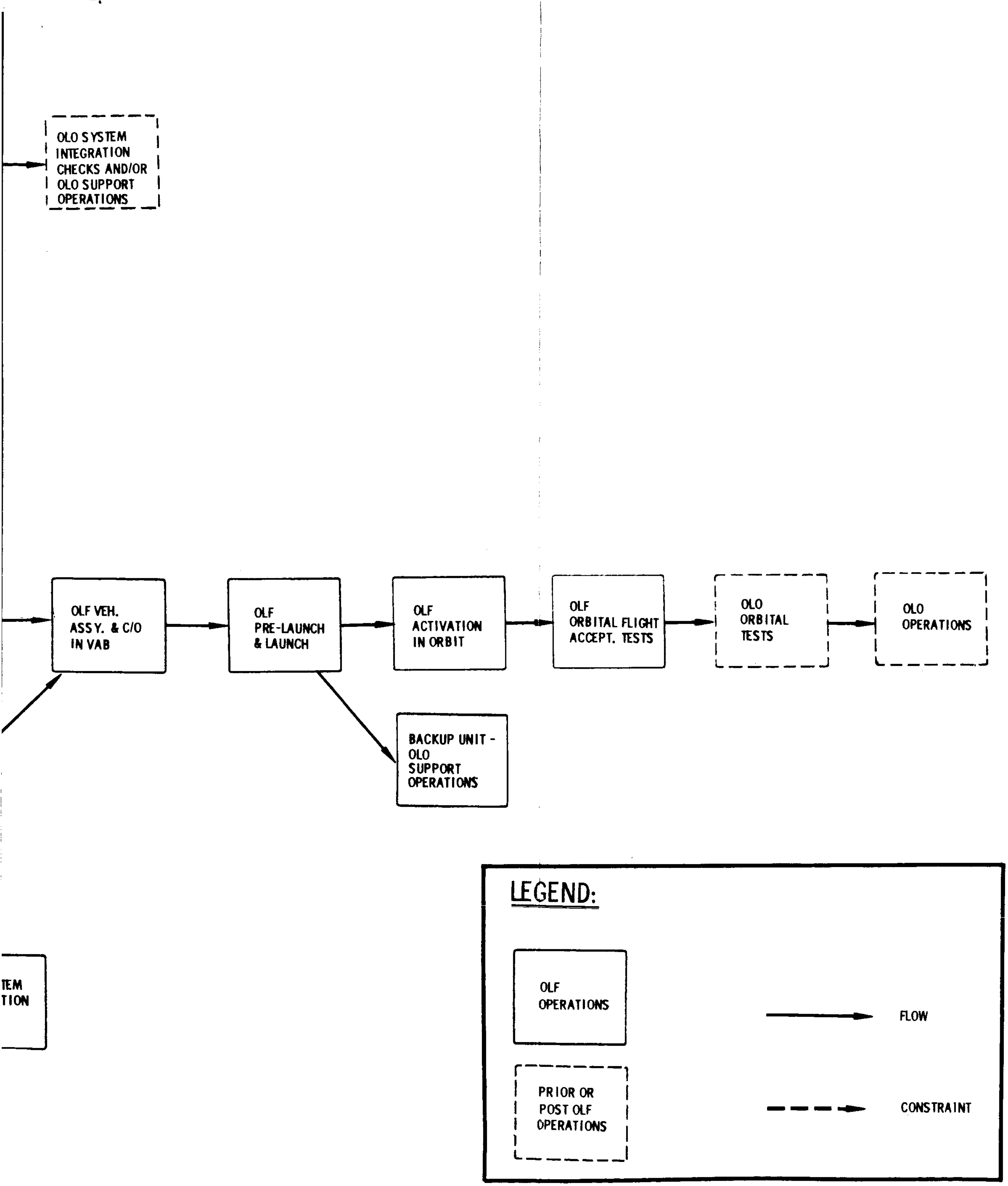

Figure 7.1-6: INITIAL OLF TEST PLAN FLOW

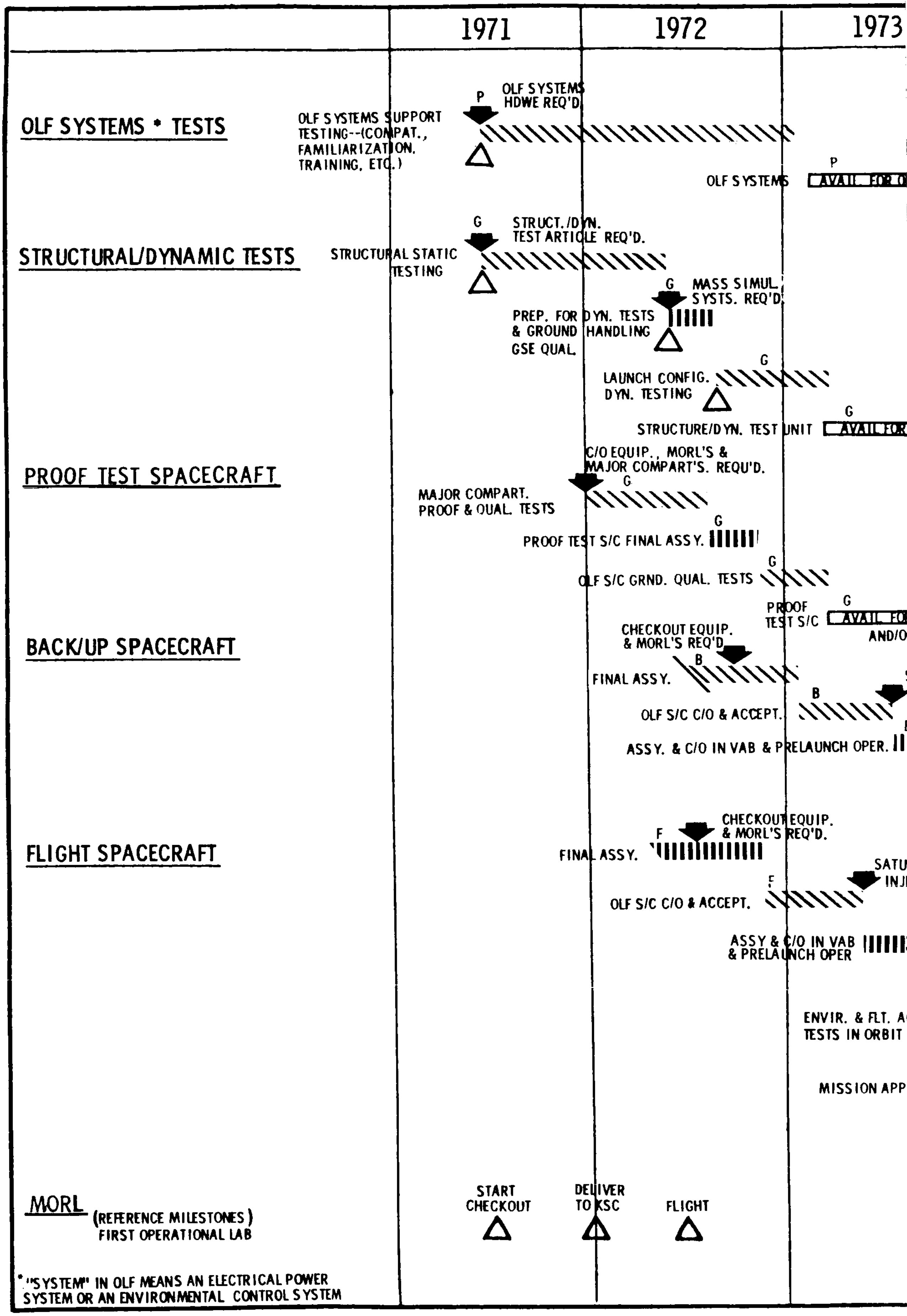

* "SYSTEM" IN OLF MEANS AN ELECTRICAL POWER SYSTEM OR AN ENVIRONMENTAL CONTROL SYSTEM

2

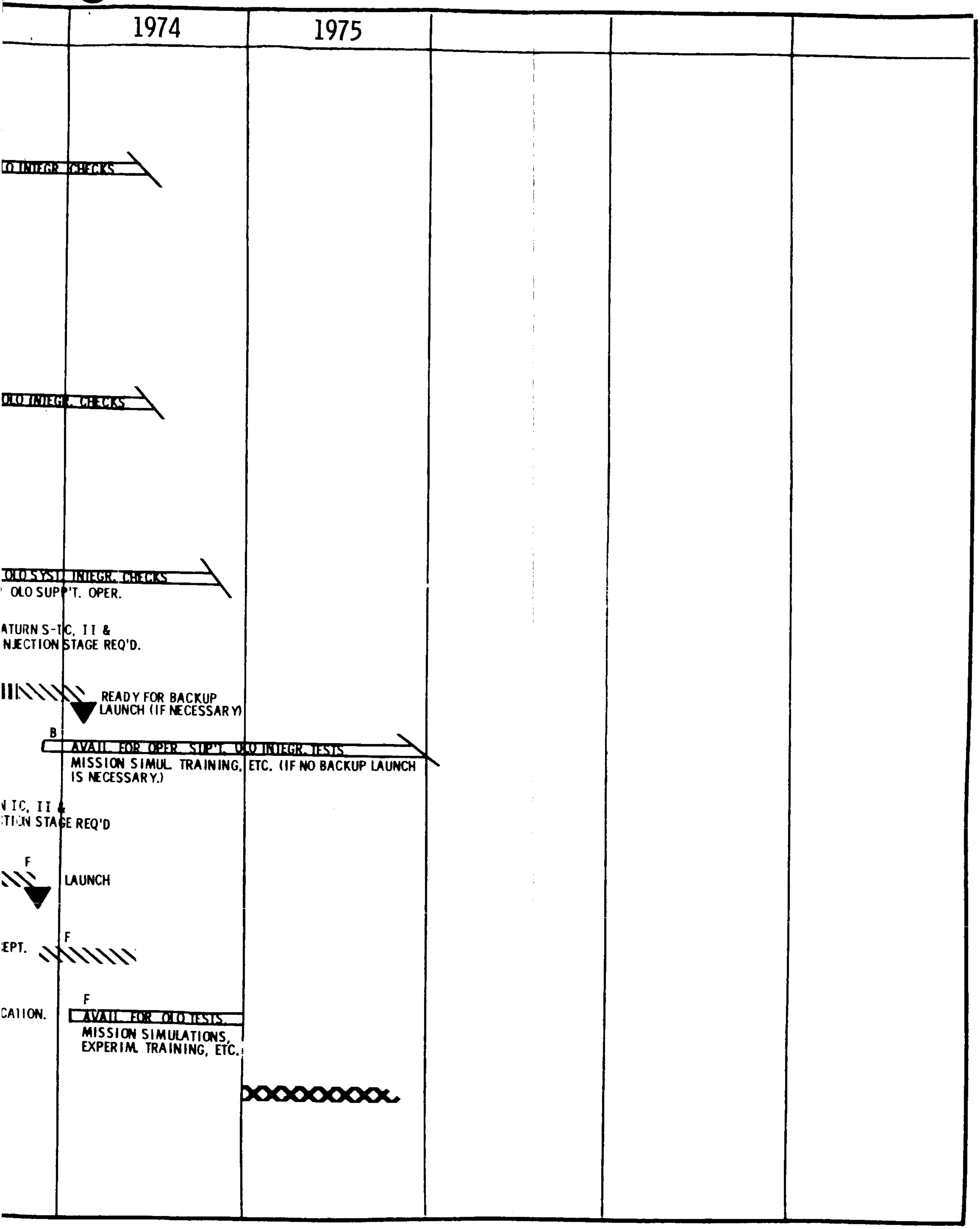

Figure 7.1-7:
INITIAL OLF TEST PLAN SCHEDULE

	OLF STRUCTURES	ELECTRICAL POWER	GUIDANCE AND NAVIGATION	ATTITUDE CONTROL & STABILIZATION	ENVIRONMENTAL CONTROL	LIFE SUPPORT	CHECKOUT AND MONITORING	DATA MANAGEMENT	MORL MODULES	APOLLO C/M & INTERSTAGE + L.E.S.	SATURN S-IC + S-II + INJECTION STAGE	SPECIAL TEST INSTRUMENTATION
FLIGHT SPACECRAFT	F	F	F	F	F	F	F	F	F	F	F	Yes
BACKUP SPACECRAFT	F	F	F	F	F	F	F	F	F	F	F	Yes
PROOF TEST SPACECRAFT	1	1 ▷5	1	1	1	1	1	1	1	1	-	Yes
STRUCTURAL/DYNAMIC TEST UNIT	P	M	M	M	M	M	M	M	P ▷7 M Bal.	P ▷1 M Bal.	P ▷2 ▷3	Yes
GROUND USE SPARES	10%	25%	25%	25%	25%	25%	50%	50%	10%	10%	-	-
OLF SYSTEMS QUALIFICATION AND SUPPORT	1	1	1	1	1	1	1	2	-	-	-	-
TEST HDWE. REQUIREMENTS	▷8	▷5		▷4	▷4	▷4	▷6					

LEGEND AND NOTES:

F = Flight Hardware

P = Prototype Hardware

M = Mass Simulated

▷1 Interstage Structure Only

▷2 Injection Stage Structure Only

▷3 Assumed that existing Saturn S-IB & S-II can be used

▷4 (2) of any new or additional equip.

▷5 Excluding the Nuclear Heat Source

▷6 Equipment assumed to be qualified under checkout and monitoring

▷7 Structures only for mating with OLF

▷8 Equiv. in addition to the Structure/Dynamic Test Unit

Figure 7.1-8: OLF HARDWARE REQUIREMENTS

- Final flight testing of the OLF will be conducted in orbit on the operational spacecraft prior to actual orbital operations. This means that the OLF will be launched into orbit early enough to allow flight testing on the OLF prior to OLO total system orbital testing or operations. An orbital period of approximately 11 months has been included in the plan for OLO integrated system tests prior to the operational launches.

- Technology development will have been completed.

- The injection stage will have been previously developed and qualified and will be available.

- Saturn S-II modifications will not require a test firing and since other payloads will require similar modifications.the development program for S-II modifications will not be shown for OLF.

- Saturn V Dynamic Test Facility will be available.

- Saturn V Dynamic Test Articles will be available.

7.1.5.2 OLF Systems Development and Qualification Test. - Since the selected OLF systems configurations or concepts will have already been space qualified on other space programs (e.g., MORL) development and qualification testing programs will be relatively minor. Figure 7.1-9 lists the OLF systems, their assumed status at time of need and the test objectives for each system.

7.1.5.3 Test Approach. - The selected test approach which is described is more detail later in this paragraph was evolved by the method pictured below. Descriptions of each step in the sequence also follow. A summary of the method and selected approach is shown on the Major Test Objectives/Test activities Matrix, Figure 7.1-10.

TEST APPROACH SELECTION METHOD

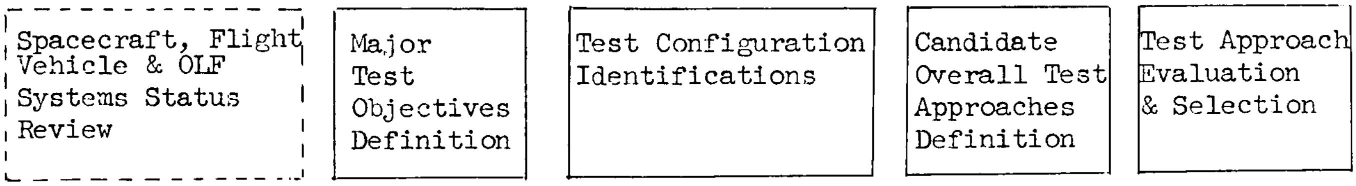

- Major Test Objectives Definition

  The OLF, OLF flight vehicle and the various OLF systems were each reviewed for assumed status during the OLF time period. From this review a list of major test objectives was formulated. The list of test objectives thus formulated is shown on Figure 7.1-9.

OLF SYSTEM	ASSUMED STATUS	TEST OBJECTIVES
• Electrical Power System	Basic System fully qualified on MORL but new location, new cooling, new routing and loading.	Verify adequate power system heat dissipation; Electrical load profile verification; Confirm electrical power distribution.
• Guidance and Navigation System	Fully qualified on MORL and Apollo.	OLF compatibility, training, and familiarization.
• Attitude Control and Stabilization System	All components and basic system configuration fully qualified on MORL, but new vehicle to be controlled.	Verify orbital dynamics model; Confirm controlability.
• Environmental Control Systems	All components (except additional circulation equipment) and basic system configuration fully qualified on MORL.	Verify heat load profile; Verify adequate heat dissipation.
• Life Support System	All components (except contaminant control) and basic system configuration fully qualified on MORL.	Assure adequate contaminant control system and procedures.
• Checkout and Monitoring System	Equipment fully qualified on checkout and monitoring system test program.	Develop and verify operating procedures for OLF Checkout; Develop and verify operating procedures for OLV Checkout.

Figure 7.1-9: OLF SYSTEMS TESTING REQUIREMENTS

OLF SYSTEM	ASSUMED STATUS	TEST OBJECTIVES
● Data Management System	Partially qualified on MORL - requires modified antennas.	Confirm antenna patterns.
● Apollo C/M and L.E.S. System	Apollo C/M and L.E.S. fully qualified on Apollo program.	OLF compatibility, integration, training and familiarization and structural qualification of the interstage.
● Saturn, S-IC, S-II and the Injection Stage Systems	Assumed fully qualified prior to OLF including Saturn S-II modifications.	OLF compatibility, integration, training, familiarization. (Includes dynamic testing with OLF launch configuration.
● OLF Structures System (Includes mechanical equipment)	Not qualified, but assumed that 75% of the components are qualified.	Verify static loads for both boost and orbit--(Includes pressure shock, pressure cycles as well as bending, tension, etc.) total vehicle and new compartments; Verify boost dynamic loads; Qualify mechanisms.
● OLF Spacecraft (Total OLF)	Not qualified.	Electromagnetic interference in the boost configuration: Electromagnetic interference in the orbital configuration: Develop and verify crew safety procedures; Develop and verify other procedures (operations, maintenance, etc.) Integ. OLF GSE with OLF veh.

Figure 7.1-9: OLF SYSTEMS TESTING REQUIREMENTS (CONTINUED)

TEST ACTIVITIES	FLIGHT SPACECRAFT			S/C STRUCTURAL VEHICLES		PROOF TEST VEHICLE		FLIGHT-TYPE SYSTEMS			
TEST OBJECTIVES:	FLIGHT	GROUND ENVIRONMT'L	GROUND AMBIENT	FLIGHT CONFIGURATION	BOILERPLATE	FULL CONFIGURATION	MAJOR COMPARTMENTS	ENVIRMNT'L	AMBIENT	FULL-SYSTEM SIMULATOR	SYSTEM SIMULATORS
POWER HEAT DISSIPATION		X					X	Ⓧ			
POWER PROFILE	X	X	X			Ⓧ					
POWER DISTRIBUTION		X	X			Ⓧ					
ORBITAL DYNAMICS MODEL	Ⓧ			X			Ⓧ				
CONTROLABILITY	Ⓧ										Ⓧ
ENVIR CONTROL HEAT LOAD PROFILE	X	X	X			Ⓧ					
ENVIR. CONTROL HEAT DISSIPATION		X					X	Ⓧ			
CONTAMINANT CONTROL	Ⓧ	X	X			Ⓧ					
OLF C/O PROCEDURES		X	X			Ⓧ					
OLV C/O PROCEDURES	Ⓧ	X	X			Ⓧ					
ANTENNA PATTERNS	X								Ⓧ		
STATIC LOADS (& PRESSURE)				Ⓧ			Ⓧ				
DYNAMIC LOADS (BOOST)				Ⓧ			X				
MECHANISMS									Ⓧ		
EMI-BOOST CONFIGURATION			Ⓧ								
EMI-ORBIT CONFIGURATION	Ⓧ		Ⓧ			Ⓧ					
SAFETY PROCEDURES		X	X				Ⓧ		X	X	X
OPS., MAINT PROCEDURES	Ⓧ	X	X				Ⓧ		X	X	X
GSE INTEGRATION			X	Ⓧ	X		Ⓧ		X		

Figure 7.1-10: MAJOR TEST OBJECTIVES/TEST ACTIVITIES MATRIX

Test Configuration Identifications

Test configurations that could contribute toward satisfying the test objectives were identified along with the test environment required. The activities so identified are shown by an X or X on Figure 7.1-10, X meaning a potential test approach and X meaning the selected test approach.

Candidate Overall Test Approaches Definition

In this study the following five candidate overall test approaches have been defined and examined:

a) Maximum use of ambient ground testing on the flight spacecraft. This approach also required a maximum of flight-type system tests, a flight configuration structural vehicle and an attitude control system simulation.

b) Maximum use of testing in flight prior to operational readiness of the OLF. This approach required considerable flight spacecraft ground ambient testing, structural vehicle testing, and subsystem testing.

c) Similar to (b), substituting tests of major compartmental sections of the OLF structure for the structural vehicle and then equipping these sections for procedural development.

d) Maximum use of flight spacecraft ground environmental testing. This approach also involved some OLF systems testing, a structural vehicle, and an attitude control system simulator.

e) Maximum use of a proof test vehicle; testing first conducted on major compartmental areas, then following assembly additional testing of the complete OLF. This approach also involved systems testing and an attitude control system simulator.

Test Approach Evaluation and Selection

The five approaches were evaluated based on the following criteria:

- Program Ground Rules
- Test Objectives Fulfillment
- Personnel Safety
- Cost
- Schedule Risk

The approach chosen is the result of a thorough evaluation exercise wherein the goal was to develop an approach to testing that would guarantee maximum satisfaction of the major test objectives with the least expenditure of resources. This approach incorporates a minimum of risk from a program and personnel standpoint, strict adherence to the intent of the program ground rules, maximum fulfillment of test objectives, and an economical expenditure of time and funds.

The approach which was selected is a combination of the elements of approaches "e" and "b", and is indicated by the circled X's (X) on Figure 7.1-10. This approach employs maximum utilization of a proof test vehicle in satisfying those test objectives thought to be crew and/or mission critical. System level testing is included in this approach for the OLF radiators, the antenna, and the OLF extension mechanisms; these tests have been singled out for particular attention because of their high mission criticality nature. The selected approach incorporates a system simulation exercise for the OLF control system. Those test objectives deemed to have the most significant influence on personnel safety and the success of orbital operations will receive further attention during the flight testing phase.

The principle elements and features of the selected approach to testing are presented in outline form on Figure 7.1-8 (OLF Hardware Requirements), Figure 7.1-9 (OLF Testing Requirements), and Figure 7.1-10 (Major Test objectives/test activities matrix).

7.1.6 Reliability and Safety Plan. - The purpose of this plan is to identify the safety tasks required to ensure a design capable of performing its planned function with a realistic probability of success. It extends from the concept feasibility phase through the mission application phase of the RDT&E process. This plan is based on the recently developed MOLAB Reliability and Safety plan, Boeing document D2-83301-3, and an in-house special study resulting in A Guide for Reliability Program Plan Development, document D2-20459-1. The MOLAB plan was generated from the study of previous NASA oriented program plans, including Saturn (document D5-11013) and Lunar Orbiter (document D2-100151), and development experience from programs such as Saturn, Lunar Orbiter, Minuteman and Bomarc. The discussion covering the reliability activities from the concept feasibility phase through the system definition phases is unique in the OLF plan.

7.1.6.1 Reliability and Safety Engineering. - To achieve a high level of reliability and safety, it is necessary to conduct reliability and safety activities throughout the RDT&E process. The reliability and safety activities for the OLF program, therefore, will be described per phase, or combinations thereof, of the RDT&E process up to the point of implementing a full reliability program. At that point, the basic elements of a complete formal reliability and safety program will be outlined. In the concept feasibility phase, the effort is concerned with identifying those factors which would affect reliability and safety and performing trade-offs to arrive at selected mission and hardware concepts. The output of this phase results in:

- Identification of reliability and safety critical areas in terms of mission objectives and/or hardware concepts;
- Appraisal of state-of-the-art reliability and safety technology and expected advances;

- Identification of areas in need of further reliability and safety study;
- Recommendation of preferred mission and hardware concepts;
- Recommendation of ORL experiments.

In the system optimization and system definition phases, the reliability and safety effort is concerned with evaluated selected concepts and evaluating and defining a particular system. The activity remains one of analyzing and trading the level of reliability and safety desired against performance, cost, schedule and other potential program constraints. Each alternate concept is analyzed to further identify reliability and safety problems. A system reliability and safety model is developed to be used as the fundamental basis for allocation and prediction. This model associates the hardware configuration with the functional design and identifies environmental conditions, operating times, and levels of operation. The output of these phases results in:

- Estimates of reliability and safety for selected missions and hardware configurations;
- Establishment of design reliability and safety requirements;
- Recommendations of design configurations which optimize reliability and safety with respect to other design parameters.

Formal Reliability and Safety Program. - The reliability effort from preliminary design through mission application takes the form of a complete reliability program. The specific tasks which need to be conducted to ensure that reliability and safety are maximized with respect to all program constraints are outlined in the succeeding paragraphs. Design specifications prepared at spacecraft, system, and component level provide the baseline requirements for all system hardware. As a first step in assuring that reliability and safety are considered as an integral part of the design, reliability and safety inputs are prepared to be included in the design specifications.

The system reliability and safety model established during the system optimization and system definition phases will be updated and will provide an orderly definition and presentation of:

- Various operational sequences
- Definition of success and failure for each operational sequence
- Environmental profiles
- Duty cycle profiles
- Hardware configuration
- Functional block diagrams
- Functional logic diagrams

- Reliability mathematical model(s) derived from the functional block diagram

- Government-furnished property reliability evaluation requirements

Reliability Allocation and Production. - In order to provide specific reliability and safety requirements into the design specifications, it is necessary to develop realistic goals for each subsystem by allocating the system reliability and safety requirements in accordance with the parameters established in the system reliability and safety model. The establishment of realistic goals is highly important since design approaches will depend on the criticality of various subsystems probability of success.

Whereas allocation is a "top-down" process, prediction is a "bottom-up" process. First a reliability and safety mathematical model is developed which transforms the functional block diagram into an equation permiting the combination of the individual block reliabilities into a system estimate. The reliability and safety estimate which follows provides a gross measure of feasibility of the design to meet the reliability and safety goals previously allocated to the various subsystems. Additional predictions are made to reflect changes in design configuration in order to provide current estimates of reliability and safety prior to a detailed failure mode probability of success estimate.

The failure mode and effects analysis guides design decisions to eliminate or reduce the effect of critical modes of failure and in addition provides a revised reliability and safety prediction based on the latest design configuration. The detailed failure mode and effects analysis is performed when the functional schematics with part identification data are completed and is continually updated to reflect the latest design configuration.

Reliability and Safety Assessment. - Reliability and safety assessment is the process of estimating a current level of inherent design reliability and safety. Test data is utilized to the maximum extent and serves to verify the predictions made earlier with respect to meeting the allocations. The assessments are used to verify the failure modes identified in the failure mode and effects analysis and provide additional information for design use in preventing or circumventing potential reliability and safety problems.

Design Review. - Design reviews are a significant factor in providing design assurance. The purposes of design reviews are:

- To reveal and correct potential reliability and safety problem areas

- To review the application of parts, materials, and processes

- To compare the design against established reliability and goals

A design review would convene a panel of experienced personnel who examine each design from the standpoint of their respective fields of interests with the objective of reducing the probability of failure. These reviews are held as follows:

a) The System Design Review is conducted after the functional systems are defined, as an informal evaluation of design criteria and system design parameters and includes design procurement specifications.

b) The Preliminary Design Review is conducted, using the results of the System Design Review for reference, after installation layouts and schematics are defined. Its purpose is to evaluate the design as now formulated, including design proposals, specifications, and test plans.

c) The Critical Design Review is conducted immediately prior to production drawing release. On the basis of the results of the System and Preliminary Design Reviews, the Critical Design Review determines the total acceptability of the design, ascertains that all necessary actions have been accomplished, and makes specific recommendations in doubtful areas.

d) The Design Change Evaluation Review is conducted to evaluate the design changes for their probable effect upon achievement of operational and maintenance requirements.

A comprehensive design review program, which includes subcontractor activity, will be conducted for OLF to give Design Engineering, Management, and the Customer assurance that design progress is satisfactory and that the delivered hardware will meet all specified requirements on schedule.

Parts, Materials, and Processes. - All parts, materials, and processes used on OLF will be stringently controlled. OLF parts selection, employing optimum use of MORL hardware, will have as its primary goal the establishment and listing of parts qualified for OLF use, including application and derating data. The assessment of reliability levels in the OLF system will be based on data obtained for or generated during the program and primarily from test data. Detailed requirements, therefore, will be developed to assure the collection of various kinds of data on each part, component, assembly, throughout the design process. Equipment logs will be maintained for each separate major component, subsystem, and system as a means of documenting the continuous history of the item. The logs will account for all periods of time including idle periods, and any movements of the item. These logs will include but not be limited to the following information:

- Identification of test or inspection
- Environmental conditions
- Characteristics being investigated
- Parameter measurements
- Accumulated operating time
- Cumulative number of duty cycles to data
- Repair and maintenance record

Integrated Test Program. - OLF reliability and safety will be evaluated through the entire project from conceptual phase through the operational phase. In the early phases, evaluation will be based on the results of analyses and from experience of other programs such as MORL. Later it will be evaluated by results from the MORL and OLF integrated test programs. The degree and priority of reliability testing will be based on the results of the Failure mode and effects analyses, and any evidence that test data will be insufficient for the reliability assessment model. The combination of criticality and probability of failure will help dictate the test effort required to assure an adequate design. Within cost and schedule constraints the tests will be conducted under mission environments. Reliability demonstration and safety tests will be reduced to a minimum by careful assessment of all data provided by the development, acceptance and qualification test program

Reliability demonstration testing will have as its purpose to provide assurance that adequate reliability has been introduced and retained in the physical elements of the OLF design. As a baseline philosophy, no tests will be performed solely and specifically to demonstrate reliability. Reliability data will be acquired from all test areas where representative data are generated. These data will be supplemented by data acquired from outside sources and generated by analyses. Where the totality of these data is not sufficient to provide required assurance or confidence, additional tests will be planned.

Failure Reporting, Analysis and Corrective Action System. - A strictly controlled failure reporting, analysis, and corrective action system provides for failure recurrence prevention in the final product. The steps involved in this process include:

- Identification of the failed item and complete description of the circumstances associated with the failure
- Determination of the cause of failure
- Determination of action to prevent recurrence based on failure criticality
- Determination of the effect on reliability

Failure analysis will be conducted at the lowest suspect level, normally the component level. Physics-of-failure analysis at the part level will not normally be undertaken, except where determined essential for safety or the solving of repetitive discrepancies. All failures will be studied and corrective action will be determined for the prevention or reduction of similar failures.

Reliability Awareness and Training. - A reliability training program will be directed toward indoctrination and training of appropriate OLF personnel. This training will encompass potential reliability problem areas peculiar to the system, personnel motivation, and techniques of analysis and workmanship. This training would include:

- Education in formal reliability analysis and evaluation techniques. This training is given to Reliability engineers, System engineers, and selected engineering designers who participate in, and contribute to Reliability analysis and assessment.

- Manufacturing skills training and certification of personnel in manufacturing methods. This training, if required, is given to Manufacturing and Quality Control personnel in order to up-grade performance in manufacturing assembly, test, and inspection operations.

- Personnel indoctrination and motivation. This indoctrination is directed toward informing project personnel of the OLF program objectives, plans, and general program familiarization.

7.1.7 Logistics Plan -- Ground-Based and OLF Systems. - Logistics encompasses the equipment, material and services required to operate and maintain the OLF during the life of the program. Experience has shown that timely and adequate logistics support is essential to successful operation of a system and the completion of its objectives. To ensure consideration of all support requirements, a systems engineering approach shall be used to determine the logistic elements essential to support of the OLF. This approach was used to determine the operational OLF logistic requirements as presented in Paragraph 4.5, Logistic Support.

Operational and maintenance concepts for the ground-based functions of the OLF, which are compatible with existing NASA capabilities, shall be developed. Each major event in the ground-based cycle of OLF events shall be analyzed to determine logistic requirements for operation and maintenance of the OLF during assembly, test, checkout, prelaunch and launch.

7.1.7.1 Crew Training Requirements. - A program of training and training support, both ground- and orbital-based, is a key requirement to ensure the successful accomplishment of the OLF mission. Training shall be provided to OLF flight crew personnel, NASA personnel, OLF contractor personnel and other agencies or contractors directly involved in the OLF program. The OLF training requirements will be coordinated with NASA and other Orbital Launch Operations contractors to ensure proper integration and compatibility with the total training program. Most of the training will be accomplished at existing NASA facilities with assistance or participation from OLF program contractors.

Training of the OLF crews will require the use of academic training, simulator training, and spacecraft systems and orbital training. The OLF mission requires the crew to function both as flight crew and maintenance personnel. This will require crew training in both operational and maintenance techniques, and cross-training to enable each man to assume the responsibilities of another on a time-sharing basis and in emergency situations.

It is assumed that the training program for the MORL will have been established prior to the OLF-time period. Extensive training in basic mission operations, systems operation and maintenance, docking operations, airlock operations, exercise routines, personal functions, emergency procedures, centrifuge operations, etc., are expected to be accomplished in Apollo-and MORL-type trainers at NASA facilities. Training in special systems or equipment peculiar to the OLF will also have to be conducted.

Areas in which the OLF activities might impose additional requirements are the initial OLF assembly and checkout operations, and the extravehicular activity required for both these opeations and OLO support and maintenance tasks. Therefore, detailed training will be required for the activities involving: use of airlocks, use of restraining and tethering devices, performance of extravehicular activities in a pressurized spacesuit, use of astronaut maneuvering units, possible use of remote manipulating equipment, coordination involving two men working together, etc. These and other requirements are also identified in Paragraph 4.2, Advanced Technological Requirements for Maintenance.

Most aspects of the zero gravity environment cannot be effectively simulated on the ground and the only practical training available is actual participation in orbital flights. Manned orbital flights preceding the OLF program will have to include experiments to evaluate many of the unknowns of a zero-gravity environment. Some of these required experiments are identified in the "ORL Experiments" part of this study, Paragraph 6.3.

The maintenance analysis described in the Service, Maintenance and Repair, Paragraph 4.2, identifies the expected OLF maintenance tasks and the three basic types of skills required to perform them.

Major phases in the development of a training program are the determination of training requirements, establishment of training courses and training aides to satisfy the training requirements, and development of training equipment to support the training programs. Training requirements include the identification of the types of training required, numbers of people to be trained, and scheduling of the training. The determination of these requirements will be derived from estimates of the tasks to be performed, the skills required to perform the task, the skill of the personnel who will perform the tasks and the time available for training.

The types of crew training which would be required for the OLF include: (1) systems and subsystems training, (2) component training, (3) maintenance training, (4) duty position training, (5) personal maintenance training, (6) flight simulator training, (7) emergency procedures training, (8) navigation and tracking, (9) physiological, (10) data management, (11) communications, (12) record keeping, (13) personnel, and (14) OSE.

It is assumed that the nominal crew for the operation and maintenance of the OLF proper will be four of which two of these are rotated each 90 days. Therefore, each man will spend 180 days as an active member of the OLF crew. A total of eight men must be provided for the OLF each year and over a five-year period a total of 40 men trained in OLF operations would be required. If the crewmen were recycled and spent more than one tour of duty in orbit, this number would decrease. Since all of the men trained for the OLF would not actually be used for various reasons, (such as illness, nonadaptability, personal, etc.) the number of personnel trained must exceed the actual number required. Assuming a 50% dropout rate, a total of 60 crewmen would require training. Present estimates indicate that about two years of training will be required for each man, of which six months will be specifically oriented to the OLF.

7.1.7.2 Maintainability Plan. - Maintainability is the characteristics of system design and maintenance resource planning, which will contribute to the rapidity, economy, ease, and accuracy with which the OLF can be kept in or restored to the specified operating condition in the planned maintenance environment. This quality includes the probability that any equipment malfunction or fault occurring in OLF systems during ground-based or operational functions will be detected, diagnosed, and corrected with the personnel skills available; and, that this maintenance can be performed within an established allowable system downtime using the facilities, support equipments, tools, spares and technical data, which have been determined to be required by specification and systems analysis.

System maintainability will be assured through a program that includes the establishment of maintainability criteria and goals, and the performance of maintainability evaluations at the appropriate stages of OLF design, assembly, test, checkout, launch and operational deployment in space. The maintainability program plan includes the monitoring of the entire maintenance support program by experienced maintainability specialists to ensure:

- That systems analysts establish realistic and adequate maintainability goals
- That equipment system design will achieve the maintainability goals
- That maintainability design is implemented in production
- That all maintenance requirements are defined
- That equipment requirements include the test, checkout and repair equipment to support the system maintenance effort
- That spares requirements lists and systems logistics plans will meet system maintenance requirements
- That technical data adequately defines the operational and maintenance procedures in a clear and concise manner that is readily useable
- That the training program is commensurate with the skill level of the personnel being trained and adequate for the skills required to operate and maintain the OLF
- That the specified quantitative and qualitative maintainability evaluation reports are prepared and submitted as required

7.1.7.3 Spares Support Plan. - Spares support includes all repair parts needed to adequately maintain and keep in operation the OLF systems and its associated ground equipment. Repair parts will range from major assemblies to the bits and pieces necessary to support the OLF during all phases of assembly, testing and checkout in preparation for launch. Spares required during the in-orbit operational phase of the program are covered in Paragraph 4.4, Spares and Expendables.

It is expected that the contractor will be responsible, subject to direction from NASA, for managing and performing all activities concerning spare parts, except for specified functions relating to Government-Furnished Equipment (GFE).

The concept for ground spares support of the OLF envisions that those spare parts considered most susceptible to failure, or the lack of which would affect safety or launch schedules, will be provisioned at the test and launch sites.

Maintenance analysis, reliability requirements, failure rate data together with technical experience from other programs will enable spares personnel to determine the spares requirements and the proper allocation of these spares to the test and launch sites. Consideration will be given to program phasing, production lead time, level of assembly, maintainability, environment, accessibility for replacement, tools needed, skills required, on-site test or calibration requirements and other available data in making the spares selections. The contractor will also identify the required tools and test equipment, and make them available as appropriate.

7.1.7.4 Technical Data Requirements. - Technical data will be required for ground support of the OLF as well as for the flight crew. Data required for ground support of the OLF and its GSE will include detailed system and subsystem descriptions; operating instructions; test and checkout instructions, transportation and handling instructions; and maintenance data, which would include servicing, adjustment, calibration, fault isolation and repair instructions.

The majority of this data will become available from engineering design and test procedures developed to accomplish the test program. The requirements for technical data will be reviewed against existing or proposed engineering documentation to determine what is suitable for field or test site use. Existing technical data for off-the-shelf and GFE will be used as much as possible. Factors which will influence planning for new technical manuals will include:

- Developing technical instructions commensurate with the knowledge and skill of the personnel using them
- Maximum use of existing engineering data
- Rapid revision capability
- Use of illustrations where they can effectively simplify technical presentations
- Monitoring of job operations so that the simplest, most realistic and accurate methods are used

Operating and maintenance data to be carried onboard the OLF will be provided as required to support the highly trained flight personnel. This data must be assembled in a format that is lightweight, durable, portable, and readily useable in the space environment. Some of the data must also be useable for extravehicular activity outside the OLF, where the crew will be working in pressurized spacesuits under zero-gravity conditions. The data also must be readable under extreme variations in light intensities. Various space data formats and methods of presentation would be designed and evaluated before selecting the one considered most suitable for space use. Factors which will influence the development of technical data to be carried on the OLF will include:

- The specific operating and maintenance instructions which will be required by a highly trained crew
- The practicability of using verbal communications or TV presentation to convey some of the technical data

- The method of printed presentations - checklists, decals on equipment, microfilm, etc.
- The weight, durability and useability of instructional data

7.1.8 Facilities and Support Equipment Plan. - Evaluations of facility and support equipment requirements reveal a need of Facilities expansion for weight and balance, for simulators at MSC and KSC and a need to update two ground stations. These facility requirements were developed by evaluation of developmental, operational and mission support functions, and are based on the following ground rules:

- Manufacturing capability for OLF will be available in either existing private industry or NASA facilities
- Existing land at launch, range and other government support facilities is adequate
- Government facilities required for the support of the OLF will be made available to eliminate duplication of facilities
- Facilities identified as new or having modification requirements will be government funded
- Facilities to provide Apollo and MORL hardware requirements would be available

The facilities required were sized and costed by comparison to existing facilities, and through information pertaining to facilities availability in the 1972-1975 time period. The facilities forecast includes those recently developed, or presently in the process of development, and facilities data for programs and studies such as Apollo, MORL and Interplanetary Mission Support Requirements.

7.1.8.1 Major Test Facilities. - The R&D facilities were examined to determine if new or expanded facilities were required due to sizing or state-of-the-art development. This process of examination indicates that existing development facilities, except simulation training facilities, will be adequate.

The operational facilities requirements were identified by use of the preliminary OLF system test functional flow and NASA ground rules. Then they were sized according to the OLF vehicle configuration, whereupon a comparison of each facility to existing or planned facilities in the same category was performed.

Full Mission Simulation. - Full and partial mission simulators will be provisioned at Houston and sized according to vehicle configuration. These simulators will be housed in a semi-clean enclosed high bay area with overhead handling. Adjacent to the high bay area will be a low bay area to provide consoles, computer racks, computers, support equipment and office area. These areas will adhere to semi-clean standards. This facility will be a modification of the existing MORL mission simulation facility.

7.1.8.2 Handling and Transportation Equipment. - It is assumed that the OLF will be handled in a horizontal position after manufacture and will be shipped to the Cape in this manner. Water transportation is the most feasible method of transporting a vehicle of this size. The S-1C or S-II type barges which incorporate a temperature and humidity environmental controlled and protected area will be used to transport the OLF. A special transporter or dolly will be provided for handling the OLF and for transportation between the manufacturing facility, the dynamic test facility and the launch complex. Subsequent study activity will be required to define the OLF ground support equipment.

7.1.8.3 Launch Range and Control Center.

Weight and Balance Facility. - The weight and balance facility will be sized to accommodate the OLF and will provide capability for alignment, weighting and balancing horizontally. An existing large overhead crane will have its track extended and will be used for mating and placing the mission modules on the weight and balance fixtures. This facility will provide a large open bay surrounded by laboratories and offices and will have a flow pattern similar to Apollo - MORL weight and balance complex.

Flight Crew Training Building. - In support of simulation and training of the flight crews at KSC, the facility modifications required for the MORL program will be adequate with the exception of simulator sizing. There will be a high bay area extension required for the simulators, and adjacent low bay for consoles, simulator racks, computers, and supporting equipment, and an office area for personnel. The area will be semi-clean and air conditioned.

Ground Network. - The ground network system utilizing a unified "S" band communication system for a once per orbit transmission will require such typical sites as Corpus Christi, Quito, Ecuador, and Antofagasta, Chile. Wide band microwave transmission will be required between each of these stations and MSC, Houston. To date only the station at Corpus Christi, Texas is equipped to support the OLF program and two other stations will have to be upgraded to incorporate the following:

- Unified "S" band communication equipment
- Two-way doppler tracking and ranging
- On-site data processing
- Communication system
- Frequency and time standards
- Data recording

The cost of updating ground stations has not been included in the OLF package because this is a total OLO program or prior programs cost. During the ten-year period prior to the implementation of OLF, the ground station complex must undergo an evolution necessary to support the ever-expanding space program. Perhaps this evolution will include suitably equipping Quito and Antofagasta (or other favorable locations) to provide more optimum support for long duration earth orbital missions. If not, an alternate approach would be to use the manned space flight stations at Guam; Carnavon, Australia; Antiqua; Hawaiian Islands; Ascension Islands; and Corpus Christi to provide a minimum of one-per-orbit coverage.

7.1.9 Management Plan. - The management task is to achieve target performance and schedules within cost estimates. OLF management is comprised of two major management segments; OLF-OLO interfaces and management of OLF proper.

7.1.9.1 Management OLF - OLO Interfaces. - In accomplishing the development and deployment of the OLF spacecraft, close coordination will be required with NASA and all the major contractors participating in orbital launch operations. The major coordination activities for OLF will be with the checkout and monitoring system and the OLO systems integration contractors. Coordination to a lesser extent will be conducted with the Orbiting Launch Vehicle, Orbital Tanker, Logistics Vehicle and booster contractors. Figure 7.1-11 illustrates some of the primary interchanges of information required to accomplish the OLF development.

Required from the checkout and monitoring system contractor are primarily the development of checkout and monitoring equipment and procedures, and the specifying of related OLV maintenance activities capabilities aboard the OLF. Information provided by the OLO contractor includes integrated total OLO crew size, spares, expendables, tools, provision of OSE requirements, integration of the data management requirements, and integrated total OLO experiments.

In turn, the OLF contractor provides OLF design requirements to both associated contractors. In addition, data to be provided specifically to the OLO integration contractor includes operational requirements such as OLF proper crew size, spares and expendables, tool requirements, OLF data management requirements, experiment definitions, and a detail OLO interface RDT&E and mission plans for the OLF proper.

7.1.9.2 Management OLF Proper. - In accomplishing the OLF proper tasks, coordination for integration and interface planning and control will be established and maintained with NASA, the MORL contractor, the MORL system subcontractors, the Apollo contractor and other government operating agencies concerned with the OLF proper program. The work to be done and the outputs required in the fundamental research, applied research and development phases are described in Figure 7.1-12.

Through all phases of the initial OLF RDT&E, management planning will be concerned with establishment and maintenance of task definition and schedules, and with the definition and documentation of program controls including technical, cost, schedule, and configuration control.

7.1.10 Funding Plan. - The objective of the OLF costing is to develop a program cost of sufficient quality and validity that it could be used to establish a time phased funding plan which will allow for successful accomplishment of the initial OLF.

The OLF program consists of Apollo and MORL building blocks and includes two modified MORLS, a center section including the hub, docking ports, and a six man Apollo. There is a considerable similarity to the MORL at the system level which is reflected in a reduction of cost in the RDT&E phase for the OLF systems.

For cost planning purposes, the initial OLF RDT&E effort is defined as that portion of time from concept feasibility through the first two months of orbital OLF checkout and testing. This time period cutoff coincides with the start of the integrated in orbit OLO checkout and testing prior to mission application.

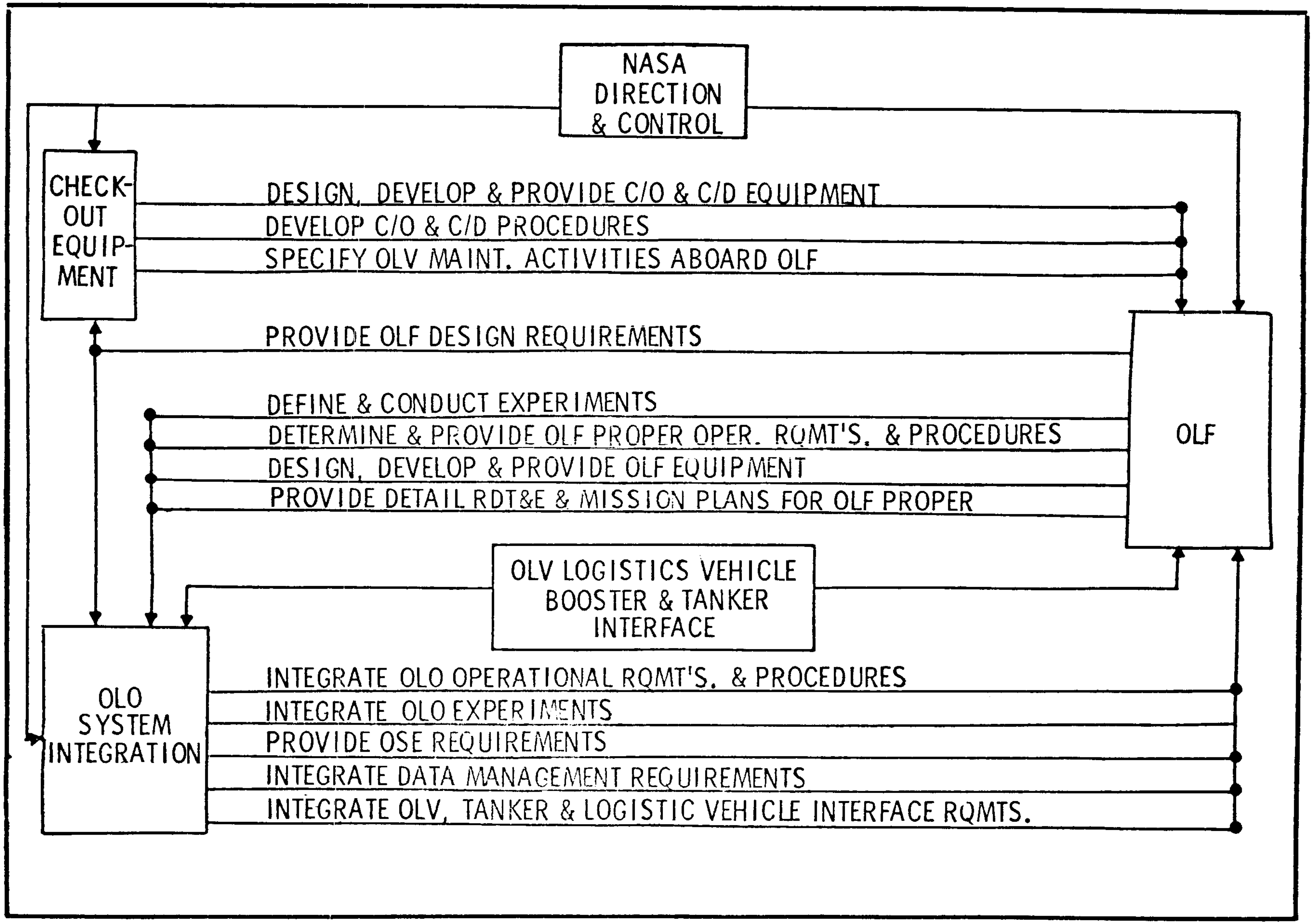

Figure 7.1-11: OLF INTERFACES WITH OLO

	ACTION	OUTPUT
FUNDAMENTAL RESEARCH PHASE	Trade-off studies & simulations	Technical, schedule and cost feasibility
	Mission definition & trade-off	Technical evaluation of selected concept(s)
	Identify critical technology requirements	Research & experiment plan
	Operational Analysis	Evaluation and definition of selected concept
APPLIED RESEARCH PHASE	Preliminary design	Preliminary spacecraft & system definition & PREL. specifications
	Ground & ORL Experiments	Design data &/or scale factors for design of hardware
	System design	Spacecraft and system specifications
	System design analysis	Program plans and funding plan
DEVELOPMENT PHASE	Detailed design	Hardware specifications and drawings
	Develop test procedures and requirements	Assurance of qualified hardware
	Procure and fabricate hardware	Deliver systems to test
	Integrate and qualify equipment (as required)	Reliable system
	Test & data analysis	Verification of system for orbital use
	Provide support	Adequate trained manpower and logistics support

Figure 7.1-12: RDT&E MANAGEMENT PLAN

Estimating Technique. - The OLF program costing performed during this study reflects values derived from parametric estimating techniques. Parametric estimating is a technique used to develop costs when design definition and other pertinent information is limited to basic weight statements and sketches.

Parameters are defined as sets of values based on statistical data, expressing a relationship between variables, both dependent and independent. They have been developed by direct application of experience actuals; extrapolation of historical data detailed estimates of comparable systems; and other similar information sources. The parametric approach expresses dollars, or manhours, as the dependent variable versus weight or other independent variable to form a coordinate system within which the relationship is expressed as a median line, or as a set of limits. Once established, this coordinate system was used to obtain values for program elements, at the system level and for the complete OLF. In addition, parametric estimating utilizes ratios between work functions and other comparisons to supplement the information provided by the parametric relationships.

Cost Summary and Ground Rules. - The hardware cost estimate was generated by the application of dollars per pound, from the MORL cost document, to the weight statement. The cost estimate is based on a total of (1) flight spacecraft, (1) backup spacecraft, (1) proof test spacecraft, a structural/dynamic test unit, plus prototype systems, mockup and simulators.

The estimated cost for Operations, Integration, Training, Systems Management, and etc., were established by application of manpower loading. An evaluation was made to assure that the estimated cost was reasonable by comparing the OLF estimate with the estimate for similar functions on the MORL Douglas cost document #SM 4461 B; GEMINI, APOLLO, and other programs as stated above.

Training of personnel was assumed to be similar to the MORL training plus OLF peculiar tasks and costed based on MORL cost data in document #SM 4461 B. Systems Management includes project administration required for planning, scheduling, coordination, reporting, and similar activities performed by both industry and government agencies in support of the particular program.

The total program cost is $861 million for the OLF and includes the costs of design development, test and fabrication of the orbital launch facility. The cost estimate is summarized in Figure 7.1-13, following the general format set forth in Project OLO Technical Information Release. These costs are in terms of 1965 dollars. A funding plan phased to match the preliminary program scheduling is shown in Figure 7.1-14 and Figure 7.1-15. The effect of projected annual escalation of costs is also shown. Figure 7.1-16 indicates the requirement of direct Engineering manpower and Figure 7.1-17, a validation chart, compares OLF dollars per pound to other Manned Space Vehicles.

The funding plan for the initial OLF was developed under the following ground rules and assumptions:

Dollars in Millions

	Design & Dev.	Ground Test Hdwe.	Flight Test Hdwe.	Total Program Cost
Structure	110.0	62.7	44.2	216.9
Comm. & Data Mgmt.	8.3	15.2	15.9	39.4
Guidance & Nav.	5.0	6.8	6.2	18.0
Stab. & Control	10.8	13.4	12.2	36.4
Life Support	5.0	32.2	29.8	67.0
Env. Control	6.0	20.5	19.2	45.7
Ele. Power	38.4	23.9	103.4	165.7
Spares	-0-	14.8	15.6	30.4
OLO Tech.	24.9			24.9
Sys. Engr.	15.0			15.0
Tooling & STE	17.5			17.5
Grd. Test Ops.	20.0			20.0
Flt. Test Ops.	7.1			7.1
Sys. Integ.	16.0			16.0
Training	10.0			10.0
Training Equip.	10.0			10.0
OLO Supt. Prog.	15.5			15.5
Sys. Mgmt.	84.0			84.0
Test Facilities	3.5			3.5
Pre-Launch Facilities	1.0			1.0
APOLLO	-0-	-0-	17.2	17.2
1965 $ Total	408.0	189.5	263.7	861.2
Escalated	525.1	243.8	339.4	1,108.3

Figure 7.1-13: INITIAL OLF COST SUMMARY

FUNDING SUMMARY

	Dollars in Millions	
Fiscal Year	1965	Escalated
1966	0.5	0.5
1967	4.3	4.6
1968	20.3	22.7
1969	34.5	40.0
1970	117.5	142.2
1971	242.9	306.1
1972	217.0	284.3
1973	166.0	225.8
1974	58.2	82.1
	861.2	1,108.3

Figure 7.1-14: INITIAL OLF FUNDING SUMMARY

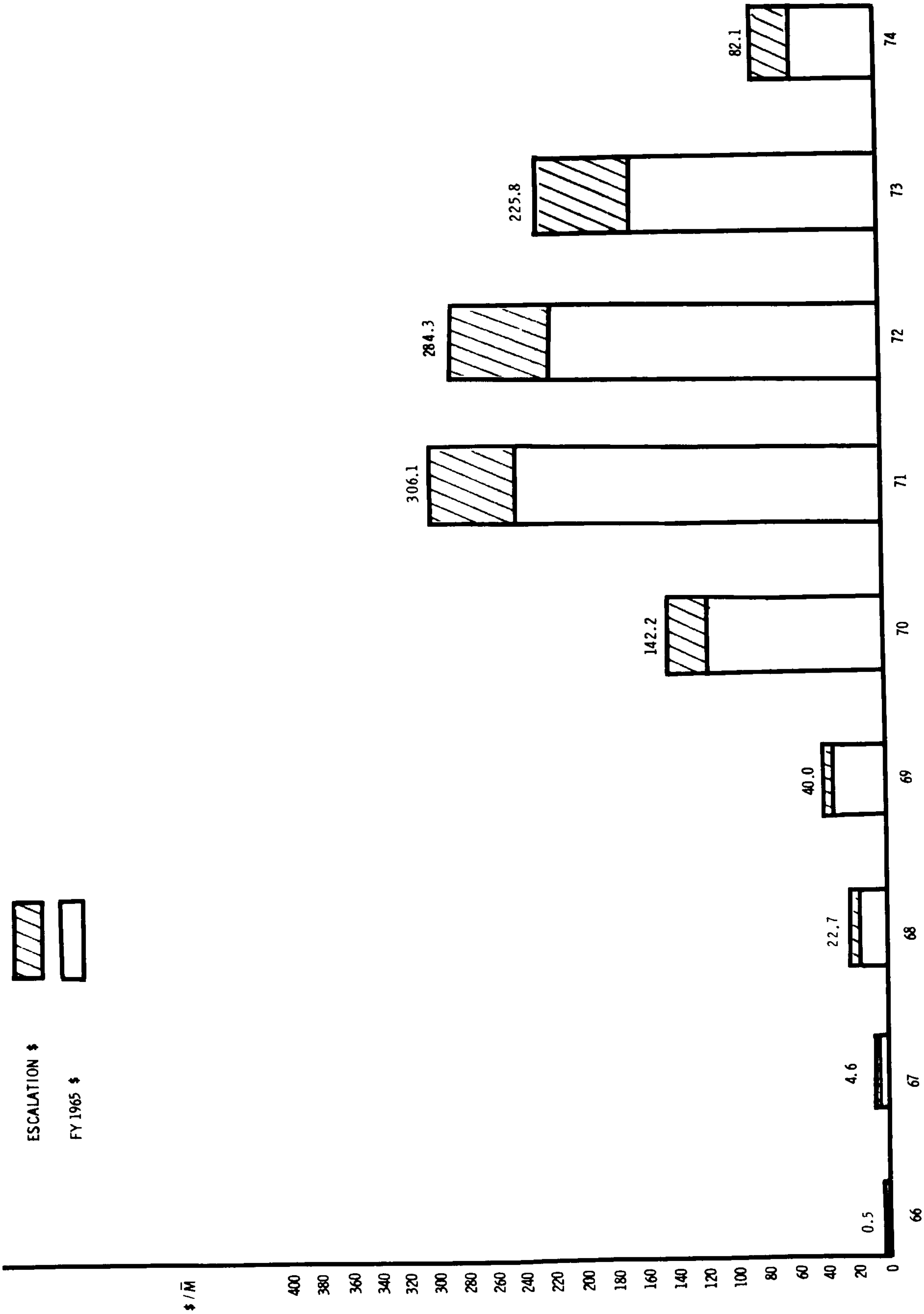

Figure 7.1-15: OLF PROGRAM FISCAL YEAR FUNDING

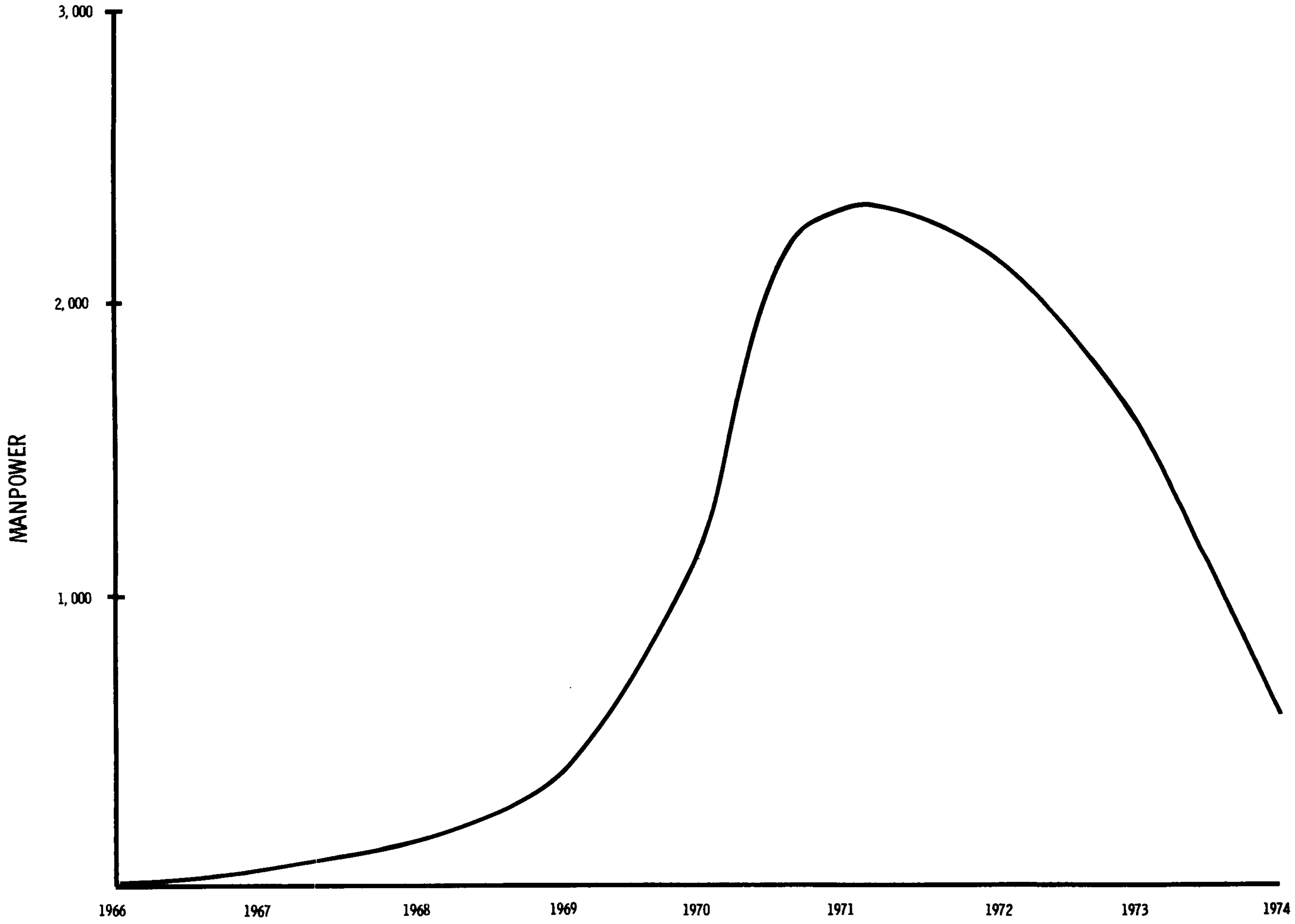

Figure 7. I-16: DIRECT ENGINEERING MANPOWER CURVE

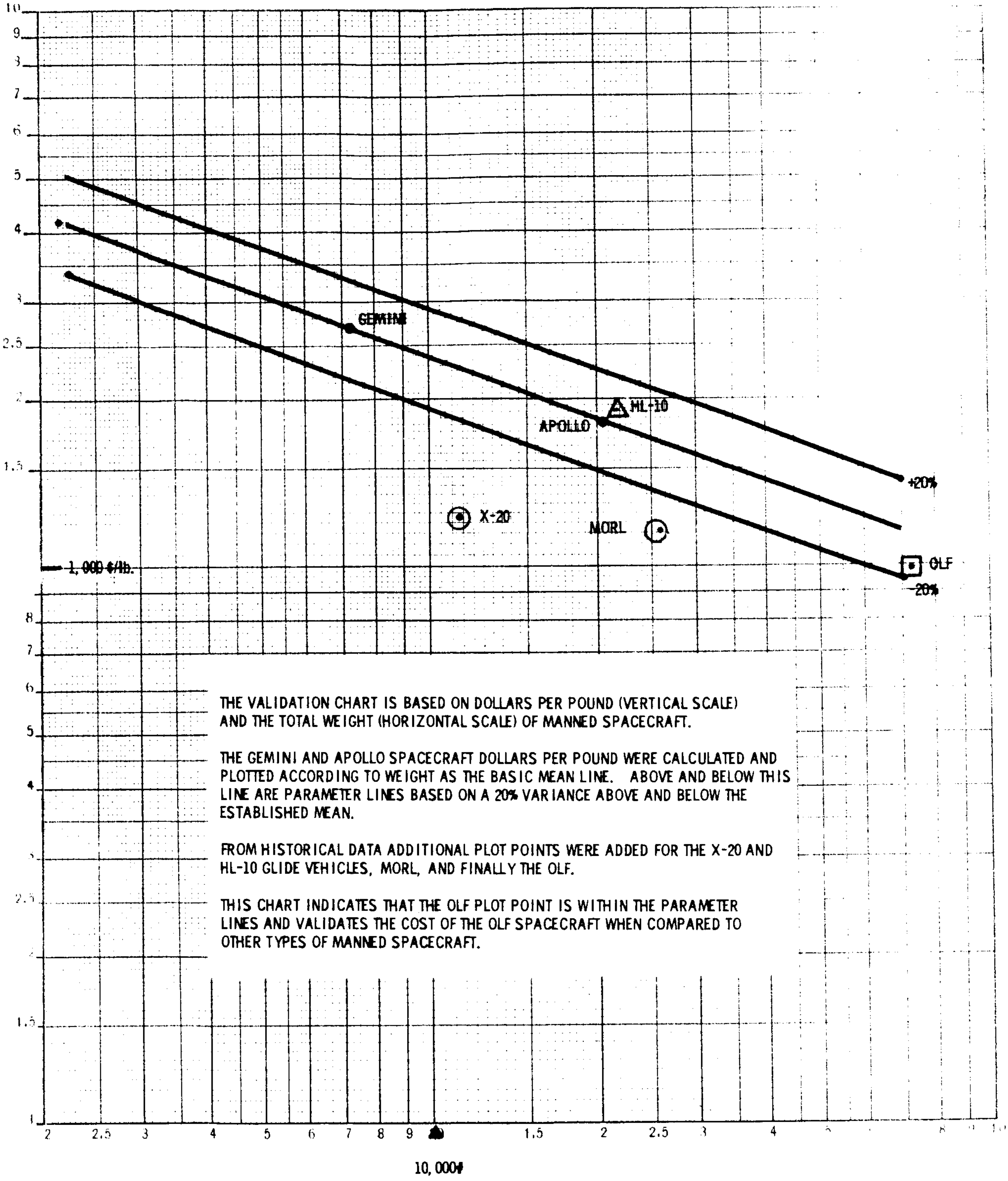

THE VALIDATION CHART IS BASED ON DOLLARS PER POUND (VERTICAL SCALE) AND THE TOTAL WEIGHT (HORIZONTAL SCALE) OF MANNED SPACECRAFT.

THE GEMINI AND APOLLO SPACECRAFT DOLLARS PER POUND WERE CALCULATED AND PLOTTED ACCORDING TO WEIGHT AS THE BASIC MEAN LINE. ABOVE AND BELOW THIS LINE ARE PARAMETER LINES BASED ON A 20% VARIANCE ABOVE AND BELOW THE ESTABLISHED MEAN.

FROM HISTORICAL DATA ADDITIONAL PLOT POINTS WERE ADDED FOR THE X-20 AND HL-10 GLIDE VEHICLES, MORL, AND FINALLY THE OLF.

THIS CHART INDICATES THAT THE OLF PLOT POINT IS WITHIN THE PARAMETER LINES AND VALIDATES THE COST OF THE OLF SPACECRAFT WHEN COMPARED TO OTHER TYPES OF MANNED SPACECRAFT.

Figure 7.1-17: VALIDATION CHART-MANNED SPACECRAFT

- A learning curve was not used due to the limited quantity of R&D spacecrafts produced.
- Spares cost include only those for OLF proper.
- No allowance for checkout equipment costs except installation in OLF.
- A quantity of 2 each S-IC, S-II, transtage booster stages, and the range operations and transportation for them are required, but not priced per LTV agreement. LTV will apply standard booster, operations and transportation costs for all booster applications in the OLO programs.
- Costs are not included for OLO integration.
- Logistic flights are not priced.
- Costs associated with potential scientific experiments conducted aboard OLF are not included.
- Costs associated with experiments on ORL's to develop OLF systems and techniques, do not include costs of the ORL spacecraft, boosters or orbital experimentation manhours.
- Modification cost for the MORL's is included.
- Prime contractor fee or profit is not included.

Tooling costs were developed by screening the Saturn tooling for potential utilization and adding necessary new tooling requirements. The analysis reveals that existing tooling could be used for many applications with minimum modification, resulting in substantial cost saving.

The planned on-board systems of OLF utilize either the MORL configuration or concept with modifications. The design and development costs of these systems were established as a ratio to the design and development costs of the basic MORL. Estimates for the categories of ground test operations, flight test operations, and systems integration were compiled by manloading each task. The method used to refine these estimates was the application of historical cost data and comparisons with the MORL estimates.

7.2 Advanced OLF RDT&E Plan. - A preliminary advanced OLF RDT&E and cost plan has been developed for the advanced OLF in support of a manned Mars landing mission and a preliminary cost plan for lunar ferry operations. These plans are developed based on the NASA point of departure plan to support the Mars opportunity in the first half of 1983 and the start of lunar ferry operations in the first quarter of 1980. Both of these plans assume the initial OLF program is in being or has been conducted. These programs are costed independent of each other but are both dependent on an initial OLF capability.

7.2.1 RDT&E Plan - Mars Landing Mission. - The Mars landing mission schedule for this advanced application is presented in Figure 7.2-1. This schedule shows a development flow time of approximately 30 months from hardware fabrication go-ahead

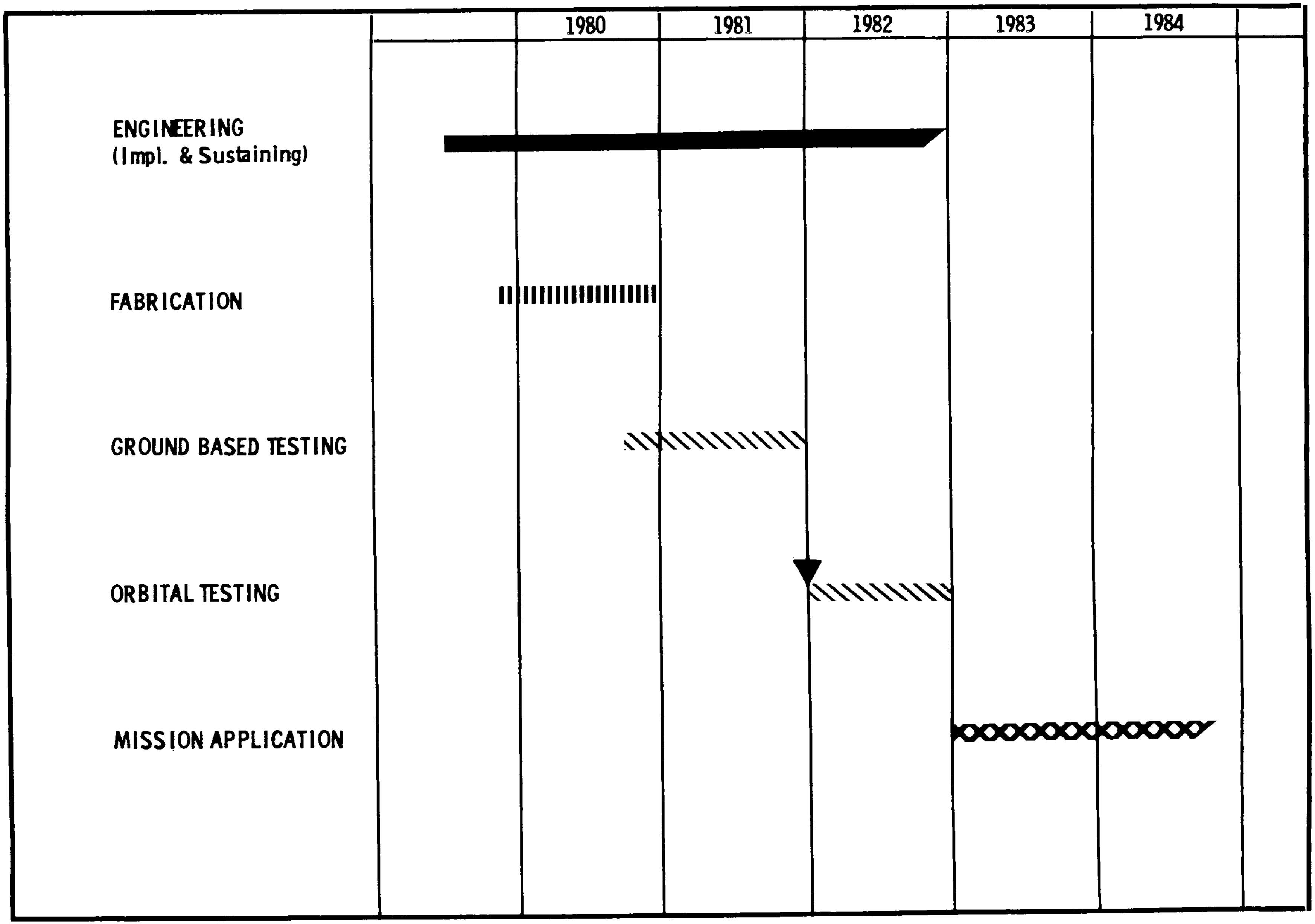

Figur 7.2-1: ADVANCED OLF RDT&E PROGRAM SCHEDULE

to advanced OLF launch for orbital checkout and acceptance testing, and 42 months to the start of mission application. OLO staging (logistics) time for a Mars landing mission was assumed the same as for the fly-by mission. Only one flight spacecraft will be fabricated and tested in support of this mission. It is assumed that the initial OLF backup spacecraft is available and will be used as is or with the umbilical removed to also backup this mission.

The principal RDT&E differences from the baseline initial OLF include the following:

- The umbilical related plumbing and tankage and the two large docking ports will be omitted because the OLV and orbital tankers will not dock to the OLF.
- Fabrication, implementation and sustaining engineering functions will be provided to update, release and modify design and drawings, and to incorporate design developments as they evolve.
- Orbiting research laboratory experiments will be conducted prior to advanced OLF deployment to develop techniques for use and maintenance of orbital support equipment and specifically an orbital support assembly vehicle.
- Provision in the OLF for additional OSE storage and maintenance.

The costs for a manned Mars landing mission advanced OLF have been based on a mass variance analysis from the baseline initial OLF, and by estimating the sustaining engineering and test engineering level of effort required. The costs are predicted on an initial OLF having been accomplished and cover the time period until orbital checkout and testing. The costs are developed based on the same ground rules and criteria as paragraph 7.1-10 and are tabulated below:

	$ in Millions
System Procurement	120.0
Sustaining Engineering (Contractor)	18.0
OLF Personnel Training	10.0
Total	148.0

7.2.2 Cost Plan - Lunar Ferry Mission. - The lunar ferry mission advanced OLF will be of essentially the same configuration and have the same RDT&E plan as the Mars landing mission advanced OLF, but in addition will have the capability to conduct cold flow tests of the propulsion system. The costs for this advanced mission support OLF are approximately the same, with the same ground rules applicable as the manned Mars mission concept, and are tabulated below:

	$ in Millions
System Procurement	120.5
Sustaining Engineering (Contractor)	18.0
OLF Personnel Training	10.0
Total	148.5

8.0 REFERENCES

1. Manned Planetary Reconnaissance Mission Study: Venus/Mars Flyby, NASA, MSFC, December 1964 - FPO Internal Note No. 1-64.
2. Orbital Launch Facility Studies - MSFC Statement of Work - DCN 1-4-21-01024-01, date May 8, 1964.
3. Final Report SCALE Study, Lockheed Missiles and Space Company, Report No. LMSC-A747356.
4. **"Saturn V Data Book for Space Propulsion Systems Studies,"** Boeing Document D5-10059, September 23, 1964.
5. "Meteoroid Environment in Near Earth and Lunar Space," NASA Eng. Criteria Bulletin EC-1.
6. Summers, J. L. and Charters, A. C., "High Speed Impact of Metal Properties on Targets of Various Materials," presented at Third Symposium on Hypervelocity Impact, 1958.
7. Lundeberg, J. F., Stern, P. H., and Bristow, R. J., "Meteoroid Protection for Spacecraft Structures," Final Report, NASA Contract NAS 3-2570.
8. Nicholas, R. F., "Apollo Tech. Manuals Structural Loads and Criteria," revised NAA Doc. ARM-6, Vol. 1 & 2, August 18, 1964.
9. MSFC Memo R-P&VE-SS-64-94.
10. Whipple, F. L., "Possible Hazards to a Satellite Vehicle,' Project RAND, Douglas Aircraft Corp., Santa Monica, Calif., 1946 (Secret).
11. Goetzel, C. G. and Singletary, J. B., "Space Materials Handbook," Lockheed Missiles & Space Co. under Air Force Contract AF 04(647)-673, January 1962.
12. "Report on the Optimization of the Manned Orbital Research Laboratory (MORL) System Concept. Vol. XII: Laboratory Mechanical Systems - Structures", Douglas Aircraft Co., Report SM46083.
13. MORL Isotope-Brayton Cycle Power Conversion System - Douglas Missiles & Space Division SM 48186.
14. MORL Isotope-Brayton Cycle Power Conversion System - Douglas Missiles & Space Division SM 48187.
15. MORL Isotope-Brayton Cycle Power Conversion System Midterm Briefing - Douglas Missiles & Space Division SM 48188.

16. Effect of Gravity Gradient on Attitude Control of a Space Station - Liska, D. J. & Zimmerman, W. H. - Journal of Spacecraft and Rockets, Vol. 2, No. 3 May-June 1965, pp. 419-425.

17. Manned Mars Exploration in the Unfavorable (1975-1985) Time Period, Douglas Missiles and Space Division, Report No. SM 45575 thru SM 45586, February 1964.

18. Study of Spacecraft Propulsion Systems for Manned Mars and Venus Mission, Martin (Baltimore), Report No. ER 13919-1, June 1965

19. Manned Mars and Venus Exploration Study, General Dynamics/Convair, Report No. GD/C AOK 65-002-1, Vol. 4, March 1965.

20. Reusable Nuclear Ferry Vehicles, Preliminary Design Study, Lockheed Missiles and Space Division, Report No. 8-09-64-2, February 1964.

21. Space Station Objectives and Research Guidelines - Hill, P. R. and Schnitzer, E. - Langley Research Center Staff, NASA TND-1504, August 1964.

22. Report on the Optimization of the Manned Orbital Research Laboratory (MORL) System Concept. Volume XXII, Experiment Briefs -- Part 1, Douglas Report SM-46093; Volume XXII, Experiment Briefs -- Part 2, Douglas Report SM-46094; Vol. XXII, Experiment Briefs -- Part 3, Douglas Report SM-46095; Vol. XXIII, Experiment Program -- Tabulation of System Requirements, Douglas Report SM-46096, September 1964. (U)

23. Extended Apollo Systems Utilization Study Reports, North American Aviation, Final Report, Vol. 3A and 3B, Experimental Program, SID 64-1869-3A and -3B, 16 November 1964. (C)

24. Orbital Space Station Study. Vol. III, Appendix B -- Experiment Definitions, Parts 1 through 7, Douglas Technical Report No. SSD-TR-46-212, 30 September 1964. (S)

25. Development of the Manned Orbital Research Laboratory (MORL) System Utilization Potential Interim Report, Douglas Report SM-48157, February 1965. (C)