NASA TECHNICAL MEMORANDUM

NASA TM X- 67818

NASA TM X- 67818

MEASURED DRIFT OF IRRADIATED AND UNIRRADIATED W3%Re/W25%Re THERMOCOUPLES AT A NOMINAL 2000^0 K

by J. D. Heckelman and R. P. Kozar
Lewis Research Center
Cleveland, Ohio

TECHNICAL PAPER proposed for presentation at Fifth Symposium on Temperature sponsored by the American Institute of Physics, the Instrument Society of America, and the National Bureau of Standards
Washington, D.C., June 21-24, 1971

E-6290

ABSTRACT

Seven tantalum sheathed, BeO insulated, 0.157 cm. diameter, grounded junction W3%Re/W25%Re thermocouples were irradiated in a helium-argon environment, at a temperature of 1900-2100°K. Six other thermocouples from the same lot were operated out-of-pile with the same temperature history as the in-pile thermocouples. Drift in-pile was determined by periodically replacing a "reference" thermocouple in the irradiation capsule. Drift out-of-pile was determined with an optical pyrometer.

After 5000 hours irradiation, the estimated neutron fluence was 2×10^{21} thermal neutrons/cm^2 and 0.4×10^{21} fast neutrons/cm^2 ($E > 0.18$ MeV). At this time the in-pile group had decreased in output the equivalent of 190°K at 2073°K and the out-of-pile group had decreased in output the equivalent of 54°K at 2073°K. The maximum deviation in drift between thermocouples of each group was $< \pm 10^{\circ}$K.

Termination of the irradiation is planned after half of the thermocouples fail. A post-irradiation calibration using an optical pyrometer and metallographic examination of the thermocouples will be performed in a hot cell. Final results will include ultimate lifetime and identification of failure mechanisms.

INTRODUCTION

Advances in space power systems and propulsion technology require measurement of temperature in the 1500°K to 2300°K range for long periods of time. For example, nuclear powered thermionic diode experiments require accurate temperature information to evaluate diode and fuel form performance and to prevent fuel overtemperature. It is often necessary to measure these high temperatures to within ± 100°K, and desirable to measure them to within ± 50°K for up to 10,000 hours of operation in a nuclear environment.

Thermocouples, because of their small size and simplicity, have been the only high temperature measuring device acceptable for nuclear reactor use; but there is currently no high temperature thermocouple which is immune to nuclear radiation. During a long-term (10,000 hour) irradiation, the neutron fluence experienced by the thermocouples may reach 10^{22} neutrons/cm^2. Therefore these thermocouples may experience drift in calibration due to: (1) chemical reactions, (2) transmutation of the thermoelements caused by thermal neutrons, or (3) radiation damage of the thermocouple materials caused by fast neutrons.

Environmental conditions at the Plum Brook Reactor Facility usually dictate sheathed thermocouples of about 0.16 cm. outside diameter. The thermoelements favored for high temperature applications are the tungsten-rhenium(W/Re) alloys. In general, the lifetime of sheathed W/Re thermocouples has been poor[1,2]. Also, Brooks and Kramer[3] have shown that sheathed W5%Re/W26%Re thermocouples are unstable and decalibrate when heated to high temperatures in a non-nuclear environment. Material studies[4-8] indicate that the lifetime can be extended and the decalibration reduced or eliminated if high purity materials and rigid quality control are used. Burns and Hurst[9] have established that bare wire W3%Re/W25%Re thermoelements are stable when operated up to 2300 °K in argon or hydrogen for 1000 hours in a non-nuclear environment.

Browning and Miller[10] calculated the percent composition changes of W, Re, and W26%Re throughout a 20-year irradiation at a thermal neutron flux of 10^{14} neutrons/cm^2-sec. Braunton, et al[11] calculated the percent of new elements formed and percent volume change for W, Re, W5%Re, and W26%Re throughout a one-year irradiation at thermal neutron fluxes of 10^{13} neutrons/cm^2-sec to 10^{15} neutrons/cm^2-sec. Funston & Kuhlman[12,13] extended this work by preparing alloys of W, Re, and osmium to correspond to the transmuted W/Re thermoelements. Based on this synthesis, a positive decalibration (i.e., a greater emf output at a given temperature) of 110°K occurred at 2100°K and a thermal neutron fluence of 1.6 x 10^{21} neutrons/cm^2 for W/W25%Re. A negative decalibration of 100 °K occurred for W5%Re/W25%Re and a positive decalibration of 70° occurred for W5%Re/W25%Re at the same test temperature and fluence. Pratt[14] also tested the transmutation effects of W5%Re/W26%Re thermoelements by synthesizing the chemical composition, and reported a negative decalibration of 200°K and 300°K for thermal neutron fluences of 2.2 x 10^{21} neutrons/cm^2 and 6.2 x 10^{21} neutrons/cm^2 respectively. Wood[15] performed calculations to estimate the change in emf of W/W26%Re thermoelements when exposed to a thermal neutron flux of 3 x 10^{14} neutrons/cm^2-sec. His results indicated the same positive decalibration that Kuhlman found, but a somewhat larger magnitude.

Mason[16] performed an in-pile evaluation of W5%Re/W26%Re thermocouples to a thermal neutron fluence of 2.2 x 10^{21} neutrons/cm^2, and observed a negative decalibration of less than 40°K at 1800°K. Novak[17] did in-pile testing of W3%Re/W25%Re and W5%Re/W26%Re thermocouples by performing a calibration before and after an irradiation of 2.8 x 10^{20}(thermal) neutrons/cm^2, and reported a positive decalibration trend of 6°K at 2000°K for the W5%Re/W26%Re thermocouple. No decalibration information was obtained for the other alloy pair. Villamayor[18] irradiated bare wire and sheathed W5%Re/W26%Re thermocouples.

Calibration was performed at the end of three successive reactor cycles. The results showed a negative decalibration of 35°K at 2073°K after irradiating at 1523°K and a thermal neutron fluence of 1.4×10^{20} neutrons/cm^2. A fairly linear decalibration was obtained for the bare wire thermoelements, and a very non-linear decalibration was obtained for the sheathed thermocouples. Thompson, et al[19] irradiated W/W26%Re and W5%Re/W25%Re thermocouples to fast ($E > 0.18$ MeV) neutron fluences in the order of 10^{21} neutrons/cm^2, and reported both types showed a significant negative decalibration; the W5%Re/W25%Re being greater by a factor of 2 to 3. Carpenter, et al[20] measured the drift of sheathed W3%Re/W25%Re thermocouples irradiated at 1356°K and a thermal and fast ($E > 0.18$ MeV) neutron fluence of 1.6×10^{21} neutrons/cm^2 and 2.7×10^{21} neutrons/cm^2 respectively. They reported a negative decalibration of about 80°K at 1356°K. The decalibration was linear with neutron fluence.

Considering the above, it is not possible to predict with a great degree of certainty the ultimate lifetime (time to catastrophic failure) and expected decalibration of W/Re thermocouples used in nuclear reactor experiments. However, it is necessary to know the magnitude of the decalibration of these thermocouples during a long-term irradiation so that the temperatures measured in an experiment can be corrected. For this reason, the test program described in this paper was established.

EXPERIMENT OBJECTIVES

The specific objectives of the experiment are listed below.

1. To determine the radiation effects on the calibration of sheathed state-of-the-art W/Re alloy thermocouples operating in the 1900°K to 2100°K temperature range.

2. To determine the ultimate lifetime (time to catastrophic failure) of the thermocouples tested.

3. To determine the cause of the observed effects by post-test examination of the thermocouples.

EXPERIMENTAL METHODS

It was suspected that sheathed thermocouples may experience drift in a non-nuclear environment due to chemical reactions which are accelerated at high temperatures. Therefore, an out-of-pile control experiment was deemed necessary to separate the radiation effects from other variables.

The methods used to obtain experimental data are vitally important in the interpretation of the data, especially to those not familiar with the details of the experiment. Therefore, the design of the in-pile and out-of-pile apparatus to measure thermocouple drift will be described.

In-Pile Apparatus

A sketch of the in-pile capsule is shown in Fig. 1, and a photograph of this capsule, less the stainless steel container, is shown in Fig. 2. Seven W/Re thermocouples enter a 1.9 cm. diameter x 3.8 cm. long tantalum-10% tungsten (Ta10%W) test cavity at an angle of approximately 8° with the test cavity axis. The thermocouples extend into this test cavity with their junctions positioned near the center at a radial distance of about 0.63 cm. A 0.318 cm. outside diameter Ta10%W drilled rod runs axially through the test cavity. The upper two-thirds of this drilled rod forms a thermocouple well, and the lower one-fourth forms a black body hole for optical pyrometer sightings during post-irradiation calibration. Stranded tunsten wire is wound on a grooved beryllium oxide (BeO) form to serve as an electrical heater. A cylinder of Ta10%W around the heater, and several discs of the same material at each end of the test cavity serve as radiation heat shields to maintain a uniform temperature in the test area.

The test cavity and the thermocouple well are pressurized with high purity helium gas. The area surrounding the test cavity is pressurized with flowing high purity helium gas, high purity argon gas, or a mixture of the two. A flow rate of approximately 10 cc/min. insures complete mixing of the two gases. Use of these inert gases allows the temperature of the test area to be controlled.

Figure 3 is a photograph of the completed capsule. A stainless steel container encloses the assembly. Stainless steel tubes containing nickel and cobalt dosimeter wires are visible at the top of the capsule. In addition, a tungsten dosimeter wire is installed with the thermocouples. After completion of the irradiation, these wires are removed and used to determine the thermal and fast neutron fluence received by the thermocouples.

In-Pile Calibration Technique

A unique method of determining the temperature of the thermocouples under test during the irradiation is incorporated into the capsule. A thermocouple can be inserted into the thermocouple well in the drilled rod whenever the temperature of the test cavity is desired. In addition, this thermocouple can be replaced with a new, recently calibrated thermocouple as often as required throughout the irradiation while the experiment remains in-core. This thermocouple, referred to as the "Retractable Replaceable Thermocouple" (RRTC)[1], is shown in Fig. 4. It utilizes a piston and cylinder placed above the capsule in a low temperature region. The thermocouple is attached to the piston, which is operated with pressurized helium gas. When not used to measure the test cavity temperature, the thermocouple is retracted to the low temperature ($< 400^{o}K$) region. The piston, cylinder, and thermocouple assembly are attached to a 0.95 cm. inside diameter flexible metallic hose, and is guided into the capsule by a 2.5 cm. inside diameter flexible

metallic hose. During replacement of the RRTC, the 0.95 cm. diameter flexible metallic hose, the piston, and the cylinder are replaced with a new assembly.

Two chromel-alumel (C/A) thermocouples are included in the capsule. These two bare wire thermocouples are welded to stainless steel rings on two of the small 0.318 cm. outside diameter Ta10%W tubes which guide the W/Re thermocouples into the test cavity. These are visible in Fig. 2. The rings are located such that their temperature is approximately one-half of the test cavity temperature. Since C/A thermocouples are not expected to be affected by the magnitude of nuclear radiation in this experiment[20,21], they serve as a backup for the RRTC to determine the capsule temperature.

In-Pile Operation

A sketch of the capsule in NASA's 60 megawatt thermal test reactor is shown in Fig. 5. This reactor is pressurized at 150 psig, and water cooled. The capsule is located in the reflector section of the core.

The capsule is heated during reactor operation by gamma energy absorbed in the walls of the test cavity. The temperature is manually adjusted by two means: (1) by remotely varying the position of the capsule in the core. In addition to changing the gamma heating rate at the test cavity, this also varies the neutron flux at the thermocouples; (2) by changing the inert gas surrounding the test cavity, as previously noted. This adjustment varies the temperature of the test cavity without changing the neutron flux.

The electrical heater serves several purposes: (1) it provides a means of out-gassing the capsule after fabrication, (2) it provides a means for checkout of the capsule at high temperatures prior to installation in the reactor core, and (3) it provides a means of performing a calibration of the thermocouples in the capsule during reactor shutdown cycles.

Out-of-Pile Apparatus

A sketch of the out-of-pile test furnace is shown in Fig. 6. Seven W/Re thermocouples enter holes drilled into a tantalum block. The ends (junctions) of the thermocouples are positioned in the drilled holes so that a black body hole is formed with a length to diameter ratio (L/d) of 6 to 8. A tungsten mesh heater surrounds the test area. Two radiation heat shields around the heater and several radiation heat shields at each end reduce losses and maintain the test area at a uniform temperature.

Out-of-Pile Operation

The furnace is operated at a pressure of $< 10^{-5}$ torr (equivalent nitrogen pressure) during the initial heating of the system. After a bake-out at a pressure of $< 10^{-6}$ torr for 24 hours, the furnace is back-filled and operated with high purity helium gas.

The temperature of the test area is controlled by the electrical input power to the heater. A welding transformer supplies the low-voltage high-current required by the heater. The input voltage to the welding transformer is adjusted by a variable autotransformer. The input voltage to this autotransformer is regulated to within $\pm$ 1/4% by an automatic line voltage regulator. There is no feedback control circuit from the test area temperature to the line voltage regulator - none is required since the variation in temperature is undetectable from week to week without making adjustments of the input power to the system.

The jacket and the flanges of the furnace are cooled by flowing water through copper tubing brazed to their surfaces. Instrumentation monitors the water temperature, water flow, water pressure, gas pressure, test area temperature, heater current, and several furnace surface temperatures. Shutdown of the furnace occurs if limits are exceeded.

Out-of-Pile Calibration Technique

The temperature of each thermocouple is measured by sighting an optical pyrometer through the prism and quartz window at the bottom flange of the furnace into the black body hole formed at each thermocouple junction. Distinguishable temperature differences did not exist between these black body holes. Therefore, the temperature difference between thermocouple junctions is insignificant.

To determine the temperature of the thermocouples, the average of at least 18 observations on at least three black body holes taken by two observers is used.

A shutter in front of the quartz window inside of the furnace prevents deposits from forming on the window. Occasionally, when the furnace is shut down, the window is removed and its calibration checked. The calibration was always found to be unchanged.

THERMOCOUPLES TESTED

All of the W/Re thermocouples tested to date were purchased from one supplier. These are commercial thermocouples, processed and tested by the supplier to meet NASA's physical requirements.

Six of the seven thermocouples tested in the out-of-pile furnace are from the same batch as those in the in-pile capsule. The thermocouples installed in the capsule were selected at random. One of the thermocouples in the out-of-pile furnace is from a previous batch, manufactured approximately one year earlier. The typical data for both batches of thermocouples, provided by the supplier, is listed in Table I.

TEST CONDITIONS

Temperature

The thermocouples in the out-of-pile furnace served as controls for the thermocouples in-pile. The furnace, therefore, followed the temperature history of the irradiated thermocouples, including unexpected reactor shutdowns.

The nominal irradiation temperature, called the "soaking" temperature, was chosen to be 2073°K. However, a nominal irradiation temperature of 1873°K was chosen for the first reactor cycle for checkout of the experiment. Later during the irradiation the temperature was again lowered to a nominal 1873°K to determine if a decrease of 200°K significantly changed the observed effects. Therefore, the soaking temperature ranged between approximately 1900°K and 2100°K.

Atmosphere

The thermocouples in-pile and out-of-pile operate in an inert gas environment with total impurities of O_2, N_2, and H_2O < 3 ppm.

Nuclear Radiation

The nominal thermal and fast (E > 0.18 MeV) neutron flux at the location of the thermocouple temperature gradient is 1.6×10^{14} neutrons/cm^2-sec and 3.5×10^{13} neutrons/cm^2-sec respectively. The nominal gamma heating rate is 6 watts/gm.

EXPERIMENTAL RESULTS

Initial In-Pile Data

During the initial heat-up of the capsule in-pile, the temperature indicated by each thermocouple was compared to the average temperature indicated by all thermocouples. The deviations were bounded, and the results are shown in Figs. 7 and 8 for the electrically-heated and gamma-heated mode of operation respectively. The limit of error band specified by the manufacturer for

the thermocouple wire is also shown in these figures. If it is assumed, for the moment, that the average indicated temperature is the true temperature (this will be argued later), then the limit of error band is the maximum expected temperature deviation for the thermocouples. With the exception of one thermocouple in Fig. 8, the inaccuracy of the thermocouples is within the limit of error.

The deviation in temperature between thermocouples increases when gamma heating the test cavity because the gamma field is uneven, and errors caused by slight differences in the heat transfer characteristics between thermocouples tend to be magnified due to the internal heat generated within each device.

The deviation of the thermocouple in Fig. 8 which partially lies outside the limit of error band does not appear to be affected to any greater degree with increasing temperature than the other thermocouples. It is therefore highly probable that its greater deviation from the average temperature is caused by inhomogeneity of the thermoelements. The initial calibration of the thermocouples, which was performed at temperatures between 1100°K and 1700°K, also supports this conclusion.

Also during the initial heat-up of the capsule in-pile, the C/A thermocouples were correlated to the average W/Re thermocouple and RRTC temperature.

Initial Out-of-Pile Data

During the initial heat-up of the out-of-pile furnace, the temperature indicated by each thermocouple was compared to the optical temperature of the black body holes. The deviations were bounded, and the results are shown in Fig. 9. The limit of error band specified by the manufacturer for the thermocouple wire is also shown in this figure. The inaccuracy of all the thermocouples is within the limit of error.

Since six of the thermocouples in the furnace are from the same batch as the thermocouples in-pile, it is highly probable that the inaccuracy of the in-pile thermocouples at the start of the irradiation was less than the limit of error. Thus, at the start of the experiment, all thermocouples apparently indicated correct temperature, and the apparatus designs proved satisfactory.

5000 Hour In-Pile Data

The temperature history of the W/Re thermocouples is shown in Fig. 10. The soaking temperature varied between approximately 1900°K and 2100°K. A curve indicating the soaking time at these temperatures is also shown in Fig. 10. The neutron flux was essentially zero during the periods of time the capsule temperature was below 373°K. During these times, the reactor was shut down for refueling.

All seven W/Re thermocouples were still operating after 5000 hours irradiation at the soaking temperature. Throughout the irradiation, the deviation in indicated temperature among these thermocouples was less than ± 10°K. The decalibration curves which follow are the result of averaging the seven W/Re thermocouple indicated temperatures.

The RRTC previously described is a W/Re thermocouple used to determine the temperature of the seven thermocouples under test. Since it also suffers radiation damage, it was replaced five times during the 5000 hour irradiation. Each time, a new calibrated RRTC was installed in the capsule and the drift of the seven W/Re thermocouples was measured. Also, the correlation of the C/A thermocouples was checked since the heat transfer characteristics of the capsule may have changed with time. The calibration was performed using both gamma heating and electrical heating of the test cavity. The curves generated from the gamma heating data are shown in Fig. 11.

The curves in Fig. 11 were cross-plotted to yield the W/Re thermocouple decalibration versus irradiation time. Figure 12 shows the average decalibration for test temperatures of 2073°K, 1673°K, and 1273°K. Caution must be observed in interpreting these curves, since the effect at other soaking temperatures is unknown. The curves are significant, however, because practical applications often require thermocouple drift information at temperatures other than the soaking temperature during an irradiation to determine the overall performance of the experiment, or for special tests.

The C/A thermocouple data was used to determine the capsule temperature between replacements of the RRTC. Some of this data was used in plotting the W/Re thermocouple drift, and is indicated for the 2073°K curve in Fig. 12.

The drift indicated in Fig. 11 and Fig. 12 is the result of all factors affecting thermocouple performance. The radiation effects can be separated and are presented later in this report.

Since the experiment was not terminated after 5000 hours irradiation, the thermal and fast ($E > 0.18$ MeV) neutron fluence received by the W/Re thermocouples in the temperature gradient zone was estimated for this report, and is plotted in Fig. 12.

5000 Hour Out-of-Pile Data

The temperature history of the out-of-pile W/Re thermocouples is the same as for the in-pile thermocouples shown in Fig. 10, with the exception that all periods of time at temperatures less than 373°K were shortened to approximately 16 hours since significant aging of the thermocouple does not occur at such low temperatures.

Six of the seven W/Re thermocouples were still operating after 5000 hours at the soaking temperature. One W/Re thermocouple from the same batch as the in-pile thermocouples failed by open circuit of the W3%Re leg after 1515 hours.

Throughout the out-of-pile temperature soak, the deviation in indicated temperature among the operating thermocouples was less than $\pm 10^{o}K$. The decalibration curves which follow are the result of averaging the operating W/Re thermocouple indicated temperatures.

Calibration of the W/Re thermocouples was performed routinely every 500 hours, and more frequently if a large drift was noted. Only the data taken when significant drift occurred was used to plot the decalibration curves for these thermocouples shown in Fig. 13.

The curves of Fig. 13 were cross-plotted to yield the W/Re thermocouple decalibration vs. time. Figure 14 shows the results for test temperatures of $2073^{o}K$, $1673^{o}K$, and $1273^{o}K$. As cautioned before, the drift at other soaking temperatures is unknown thus requiring careful interpretation of these curves.

Radiation Effects

The drift in emf of the W3%Re/W25%Re thermocouples due only to nuclear radiation when temperature soaked between approximately $1900^{o}K$ and $2100^{o}K$ can be determined by subtracting the curves of Fig. 14 from those of Fig. 12. The result is shown in Fig. 15 for test temperatures of $2073^{o}K$, $1673^{o}K$, and $1273\ ^{o}K$, and applies when gamma heating the test cavity.

A curve similar to Fig. 15 can be plotted from the data taken when electrically heating the test cavity. The results are shown in Fig. 16. The curve for $2073^{o}K$ is dashed to indicate it is cross-plotted from an extrapolated curve.

DISCUSSION OF RESULTS

Inhomogeneity of the thermoelements, caused by nuclear radiation and chemical composition changes, results in thermocouple drift only when such effects are present in the temperature gradient along the length of the thermocouple[22]. Thus, the measured drift of thermocouples which are not homogeneous depends

upon the test conditions.

Considering the above, it is not surprising to discover that the measured decalibration of the W/Re thermocouples in-pile is different when electrically heating the test cavity (Fig. 16) than when gamma heating the test cavity (Fig. 15). When electrical heating is employed, the length of the temperature gradient is approximately 3 cm. as indicated in Fig. 1. When gamma heating is employed, the internal heat generation within the material causes a different temperature distribution along the thermocouple. Essentially the length of the temperature gradient is shortened (perhaps only a few millimeters) when gamma heating the test cavity. A concise explanation for the direction and magnitude of the shift is not forthcoming because several effects are present. Some of these effects are opposing, and the magnitude of each is unknown. Though somewhat academic, the most probable effects are listed and discussed below.

1. Fast Neutron Damage: Fast neutron damage may cause vacancy clusters or dislocations in the metal[21], resulting in changes in the emf output of the thermocouple much the same as cold-working. Studies[9,23] have indicated that cold-worked W/Re thermoelements produce a lower emf output when compared to annealed thermoelements. Experimental evidence[24] indicates that some fast neutron damage may result at 10^{20} neutrons/cm^2, and significant decalibration of W/Re thermocouples occurs at 10^{21} neutrons/cm^2. Operation above 0.6 of the absolute melting temperature[24] tends to self-anneal the thermoelements. However, fast neutron damage may exist in the lower temperature region of the temperature gradient where self-annealing cannot occur. Therefore, electrically heating the test cavity may result in an increased emf output because of the movement of the temperature gradient as discussed above, and the resulting introduction of additional self-annealed thermoelements into the temperature

gradient. The net effect is a smaller measured drift since the emf output vs. temperature of the thermocouples had decreased during the irradiation.

2. Transmutation: During the irradiation, the thermal neutron flux is estimated to decrease 20% along the length of the temperature gradient (the larger value being nearer the test cavity). Considering this, electrically heating the test cavity may result in a decreased emf output vs. temperature because of the movement of the temperature gradient previously discussed, and the introduction of additional transmuted thermoelements into the temperature gradient.

3. Chemical Composition Changes: As discussed by Glawe[25] and others, several mechanisms unrelated to nuclear environments may cause chemical composition changes to the thermoelements. The resulting inhomogeneity may change the emf output vs. temperature of the thermocouple. The mechanisms which implement such composition changes are: (1) diffusion of solids which primarily affect the thermoelements adjacent to the initial location of the solid; (2) diffusion of gases (which may be formed by vaporization of material in the high temperature region) and the subsequent condensation and/or combination with materials in a cooler region, thus affecting the thermoelements at a location removed from the initial source; and (3) selective evaporation of an alloy constituent from the thermoelements. Many chemical composition effects could be theorized which would result in either an increased or a decreased emf output vs. temperature. Experimental data is not available which clearly indicates a trend or the magnitude of drift under these conditions.

The significant temperature gradient in the out-of-pile furnace occurs along a 15 cm. thermocouple length. The location of this temperature gradient

did not change during the 5000-hour test. Though this temperature gradient is longer than the 3 cm. in-pile temperature gradient, the out-of-pile drift is assumed to be independent of the length of the temperature gradient over this range.

The decalibration curves for the thermocouples in a nuclear environment (Figs. 12, 15, and 16) appear to have the form of a third order equation. All data from the irradiation was evaluated to determine if the instrumentation or if changes within the capsule caused errors in determining the temperature of the W/Re thermocouples under test. All data, the most significant of which is the C/A thermocouple information, clearly support the result.

The drift of synthesized W/W25%Re thermocouples reported by Kuhlman[12] for simulated irradiations of 0.5, 1, 3, and 6 months at 10^{14} neutrons/cm^2-sec when plotted for temperatures between 1500°K and 2200°K, results in a third order curve similar to Fig. 15 and Fig. 16. Other work by Funston & Kuhlman[13], Carpenter, et al[20], and Pratt[14] report the decalibration vs. neutron fluence to be much more linear. With the exception of Carpenter's and part of Kuhlman's investigations, the studies reviewed did not provide continuous drift data. Therefore, fluences where factors may cause abrupt changes in the emf output vs. temperature may not have been discovered.

An explanation for the behavior of the measured decalibration is not forthcoming, and time has not yet permitted a detailed study. Future investigation after the irradiation is terminated may reveal the mechanisms at work. At the present time, the authors conjecture that one or both of the following are the probable causes.

1. The emf error of W3%Re/W25%Re thermoelements continually changes nonlinearly as the percentages of tungsten, rhenium, and osmium continually change during the irradiation due to neutron capture and the subsequent decay

to new nuclides.

2. Transmuted impurities in the thermocouple assembly affect thermocouple performance whereas the original impurity had a lesser effect or no effect at all.

Since W3%Re/W25%Re was found to be stable in inert environments[9], the drift of the out-of-pile thermocouples must be attributed to chemical or physical effects. The most probable cause is chemical composition changes due to impurities in the insulator, sheath, or on the wire. Apparently, after approximately 2000 hours these impurities are gettered or diffuse to some other location where they no longer affect the emf output as indicated in Fig. 13.

It is interesting to note that the one W/Re thermocouple in the out-of-pile furnace which was from an earlier batch decalibrated the same amount as the other W/Re thermocouples in the furnace. This suggests that the performance of other W/Re thermocouples manufactured by this same supplier may be predictable.

ERROR ANALYSIS

The error in determining the in-pile thermocouple drift consists of:

1. Error in measuring the emf output of the thermocouple,
2. Error in determining changes in the reference junction emf, and
3. Factors within the capsule which change the heat transfer characteristics between the RRTC, the C/A thermocouples, and the W/Re thermocouples, resulting in systematic errors.

The maximum estimated error for items 1 and 2 above is $\pm 5^{\circ}K$. The error due to the factors noted in item 3 cannot be directly determined but is judged not to exceed $\pm 20^{\circ}K$. Therefore, the total maximum estimated error in determining the in-pile thermocouple drift is $\pm 25^{\circ}K$.

The error in determining the out-of-pile thermocouple drift consists of:

1. The inaccuracy of the optical pyrometer measurement.

2. The change in transmission of the quartz window in the furnace, and

3. The error in assuming the black body holes formed at the tip of each thermocouple have an emissivity of 1.0.

The only significant error in the above is item 1. The maximum estimated error is $\pm$ 9°K at 1100°K, $\pm$ 6°K at 1400°K, and $\pm$ 17°K at 2600°K with proportional tolerances at intermediate values.

The estimated thermal and fast (E > 0.18 MeV) neutron flux and fluence at the location of the thermocouple temperature gradient is based on dosimetry using a mockup capsule irradiated in a critical facility. The uncertainty in these measurements is a factor of 2 with 95% confidence. After the irradiation is terminated, the neutron fluence will be determined with less uncertainty from the dosimeter wires in the capsule.

CONCLUSIONS

1. Present state-of-the-art W3%Re/W25%Re sheathed thermocouples undergo a negative drift (i.e., produce a lower emf output for a given temperature) of 55°K to 60°K at 2073°K in the first 2000 hours when soaking at temperatures between 1900°K and 2100°K in a non-nuclear inert gas environment.

2. The above thermocouples undergo significant drift when soaking at temperatures between 1900°K and 2100°K in a nuclear environment with thermal and fast (E > 0.18 MeV) neutron fluences of 2×10^{21} neutrons/cm^2 and 4×10^{20} neutrons/cm^2 respectively. The drift vs. fluence appears to follow the form of a third order equation, with negative and positive drifts occurring during the irradiation. After approximately 10^{21} neutrons/cm^2 (thermal), the drift became increasingly negative, reaching 130°K at 2073°K.

3. The range in drift for both groups of W/Re thermocouples tested was less than $\pm$ 10°K.

4. The ultimate lifetime (time to catastrophic failure) of the thermocouples tested has not been determined, but exceeds 5000 hours at operating temperatures between $1900^{o}K$ and $2100^{o}K$.

5. W/Re thermocouples of the type tested should not be used in irradiation experiments when the thermal neutron fluence exceeds 1×10^{21} neutrons/cm^2 if highly accurate temperature measurements are required.

6. In this experiment, chromel-alumel thermocouples, correlated to tungsten-rhenium thermocouples at the start of the irradiation, estimated the tungsten-rhenium thermocouple temperatures to within $\pm 25^{o}K$ throughout a 5000 hour irradiation with a thermal and fast ($E > 0.18$ MeV) neutron flux of 10^{14} neutrons/cm^2-sec and 2×10^{13} neutrons/cm^2-sec respectively at the thermoelements in the temperature gradient region. In general, the reliability of such correlations is unknown, and some method of checking the correlation is necessary.

7. To separate radiation effects from non-nuclear effects on present state-of-the-art thermocouples, an out-of-pile control test is necessary.

FUTURE WORK

The following work is planned as soon as the irradiation is terminated.

1. Neutron radiograph the capsule to determine if any physical changes occurred.

2. Determine the fluence received by the thermocouples along their length by activation analysis of the dosimeter wires.

3. Perform a post-irradiation calibration of the W/Re thermocouples using an optical pyrometer.

4. Perform light metallography and electron microprobe studies on the unirradiated thermocouples to determine:

a. Grain growth.

b. Distribution of impurities.

c. Mechanisms of failure or drift.

Additional capsules are under construction to continue the irradiations. The next irradiation will evaluate W3%Re/W25%Re thermocouples at a soaking temperature of approximately 1700°K. Half of these are expected to be ultra-high purity thermocouples recently developed under an NASA contract. The remaining are expected to be manufactured to the specifications listed in Table I by the same company that supplied the thermocouples for the experiment reported in this paper. This capsule or future capsules may include one or more other device to measure high temperatures, such as an ultrasonic temperature sensor.

ACKNOWLEDGEMENT

The authors wish to thank Anne Bodnar for her aid and helpful suggestions in reducing the data.

REFERENCES

[1]J. D. Heckelman, NASA TM X-52654 (1969).

[2]N. L. Sandefur, F. D. Carpenter, R. J. Grenda, and J. S. Steibel, Gulf General Atomic, Inc. Rep. GA-9653 (Sept. 1969).

[3]E. J. Brooks and W. C. Kramer, Argonne National Lab. Rep. ANL-6981 (Nov. 1965).

[4]High Temperature Thermometry, AEC Rep. WASH-1067 (Mar. 1966).

[5]B. I. Stadnyk and G. V. Samsonov, High Temp. 2, 573 (1964).

[6]W. C. Kuhlman and W. G. Baxter, General Electric Co. Rep. GEMP-738 (Oct. 1969).

[7]D. B. Thomas, J. Res. Nat. Bur. Standards, 67C, 337 (1963).

[8]R. R. Asamoto and P. E. Novak, General Electric Co. Rep. GEAP-4903 (Apr. 1965).

[9]G. W Burns and W. S. Hurst, Nat. Bur. Standards, NASA CR-72639 (Mar. 10, 1970).

[10]W. E. Browning, Jr. and C. E. Miller, Jr., in Applied Methods and Instruments, Vol. III, Part 2 of Temperature, Its Measurement and Control in Science and Industry A. I. Dahl, ed. (Reinhold Publ. Corp., New York, 1962), pp. 271-276.

[11]C. B. T. Braunton, D. N. Hall, and C. M. Ryall, United Kingdom Atomic Energy Authority, Rep. AERE-R-5837 (1968).

[12]W. C. Kuhlman, General Electric Co. Rep. GE-TM-65-2-15 (Feb. 1965).

[13]E. S. Funston and W. C. Kuhlman, General Electric Co. Rep. GEMP-475A (Mar. 1967), pp. 265-272.

[14]R. P. Pratt, United Kingdom Atomic Energy Authority Rep. AERE-M-2081 (1968).

[15]V. E. Wood, J. Appl. Phys. 3, 1756 (1967).

[16]F. Mason, United Kingdom Atomic Energy Authority Rep. AERE-M-2179 (1969).

[17]P. E. Novak and R. R. Asamoto, General Electric Co. Rep. GEAP-5468 (Oct. 1968).

[18]M. Villamayor, NASA TT F-11623 (1968).

[19]D. C. Thompson, N. C. Hoitink, and J. L. Jackson, Battelle Northwest Rep. BNWL-917 (Dec. 1968), pp. 4.31-4.36.

[20]F. D. Carpenter, N. L. Sandefur, R. J. Grenda, and J. S. Steibel, Gulf General Atomic Inc. Rep. GA-10384 (Oct. 1970).

[21]N. C. Hoitink, R. C. Weddle, and D. C. Thompson, Battelle Northwest Rep. BNWL-1365 (June 1970).

[22]R. J. Moffat, Applied Methods and Instruments, Vol. III, Part 2 of Temperature, Its Measurement and Control in Science and Industry, A. I. Dahl, ed. (Reinhold Publ. Corp., New York 1962), pp. 33-38.

TABLE I. - DATA FOR THERMOCOUPLES TESTED

1. Sheath:

   a. Material ..... Tantalum

   b. Outside diameter ..... 0.157 $\pm$ 0.003 cm.

   c. Thickness ..... 0.0254 $\pm$ 0.005 cm.

   d. Condition ..... No visible cracks or marks

   e. Purity ..... $>$ 99.8%

2. Wire:

   a. Material W3%Re, W25%Re

   b. Manufacturer ..... Engelhard

   c. Diameter ..... 0.0242 $\pm$ 0.0038 cm.

   d. Limits of error ..... $\pm$ 8°C to 800°C,
   $\pm$ 1% of temperature from 800 °C to 2300°C,
   with reference junction at zero degrees Centigrade

3. Insulator:

   a. Material ..... BeO in 30 cm. hot zone, remainder MgO

   b. Purity ..... BeO $>$ 99.93%, MgO $>$ 99.5%

4. Overall Construction:

   a. Swaged, grounded-plugged junction

   b. 56 to 122 cm. length

   c. Spliced to Inconel sheathed MgO insulated compensated lead wire to achieve an overall length of approximately 510 cm.

   d. Insulation resistance $> 10^{10}$ ohms at 500 volts D.C.

   e. Helium leak rate of entire assembly after being pressurized to 1000 psig shall be $< 10^{-8}$ cc/sec.

   f. Radiography of completed assembly shall be used to verify that the junction, wires, and splice construction are satisfactory.

[23]J. C. Lachman, Fall Instrument and Automation Conference, Los Angeles, Calif. (Sept. 1961), Paper 150-LA-61.

[24]R. L. Shepard, Reactor Fuel-Proc. Tech. 12, 205 (1969).

[25]G. E. Glawe, NASA TN D-7027.

E-6290

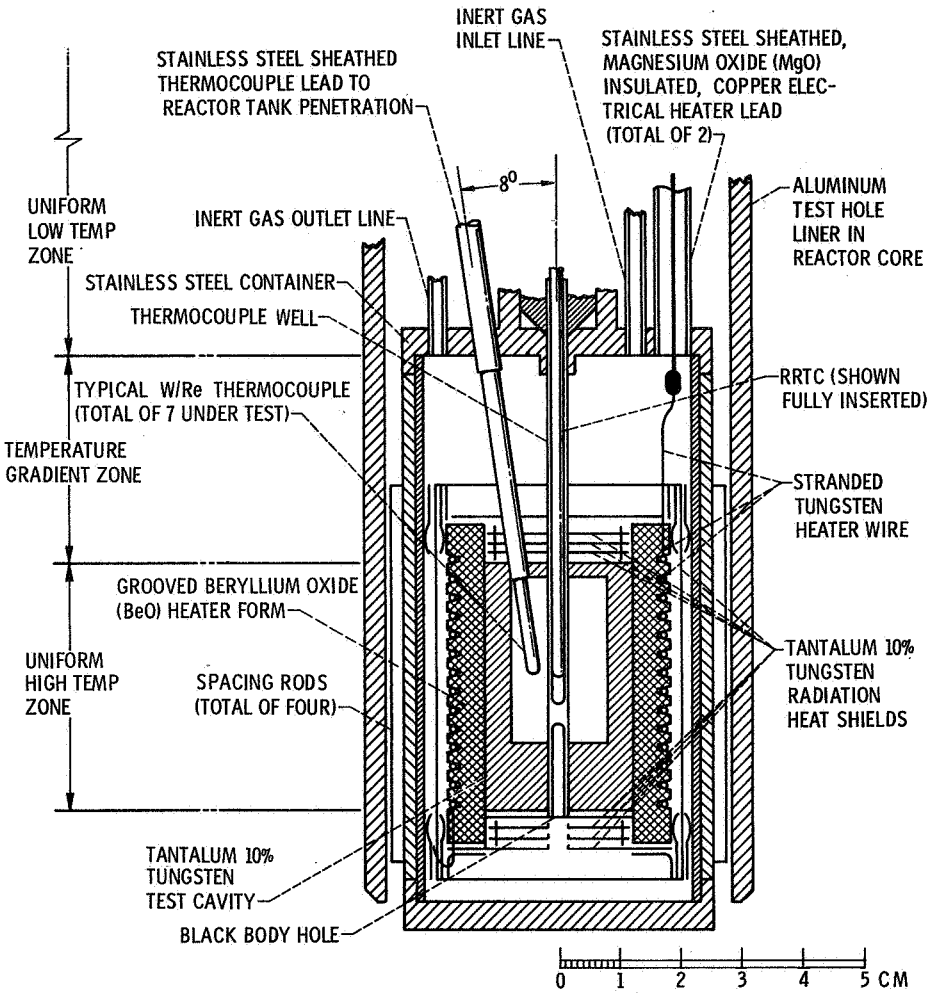

Figure 1. - In-pile capsule.

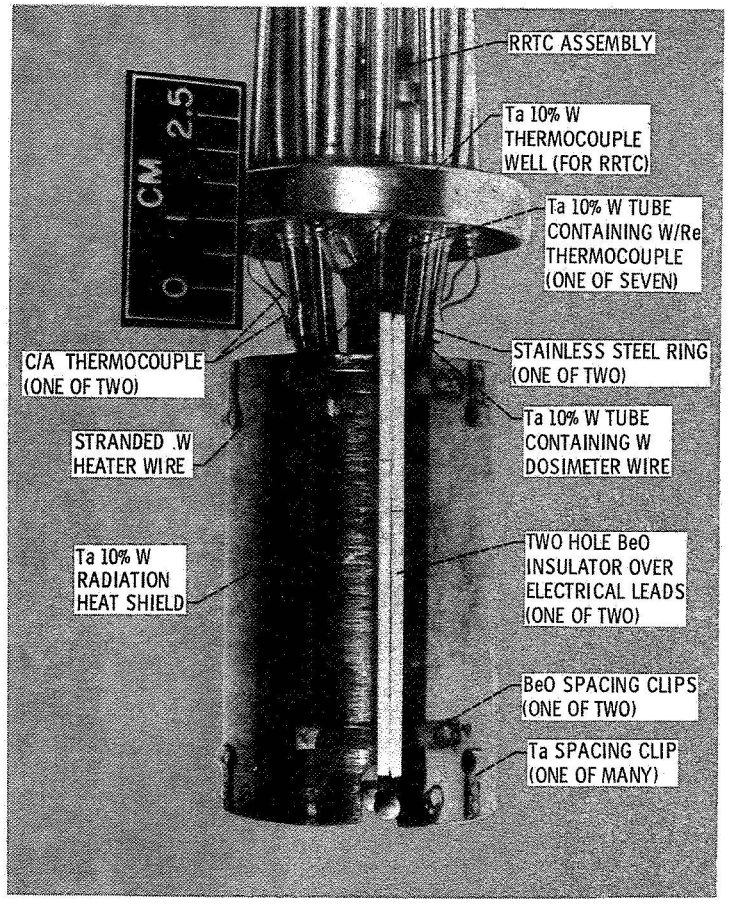

Figure 2. - In-pile capsule, internal view.

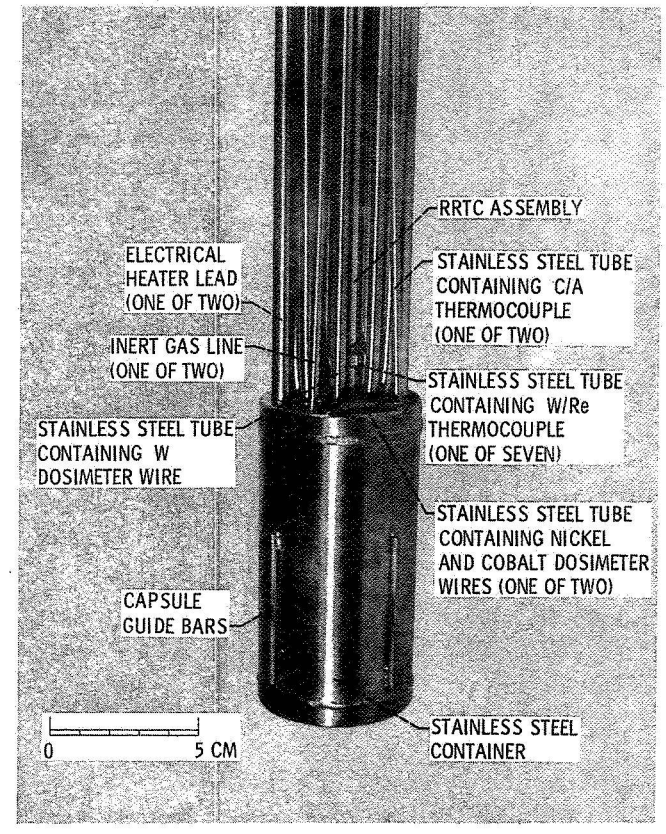

Figure 3. - In-pile capsule, external view.

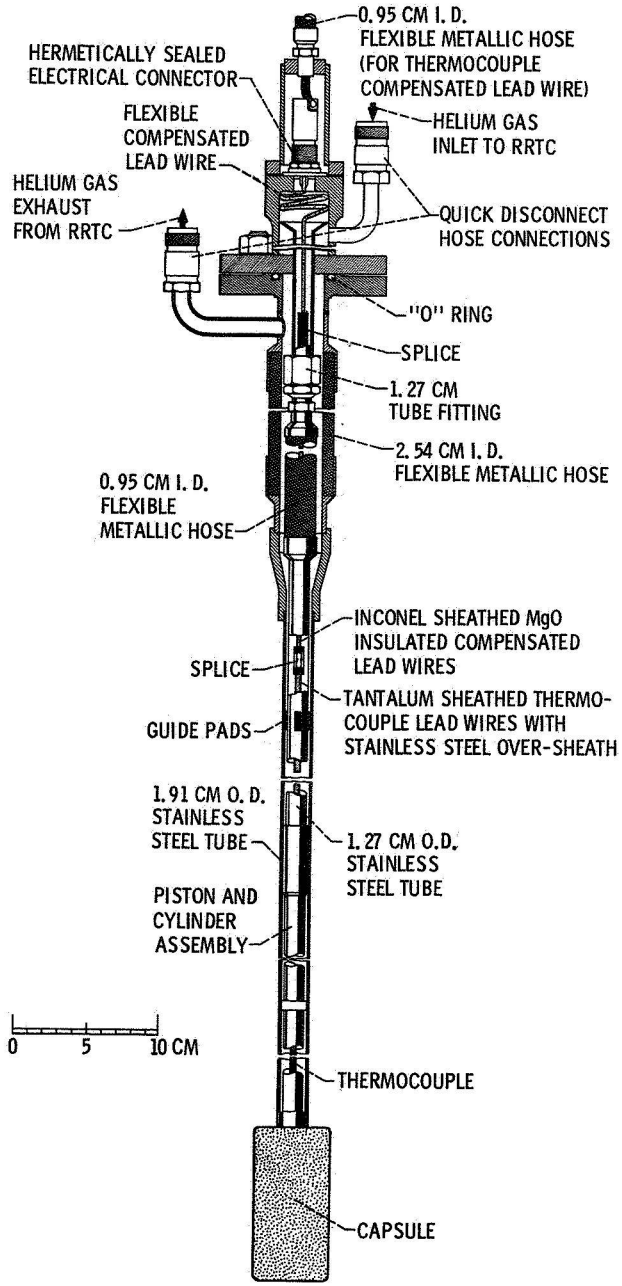

Figure 4. - RRTC Assembly.

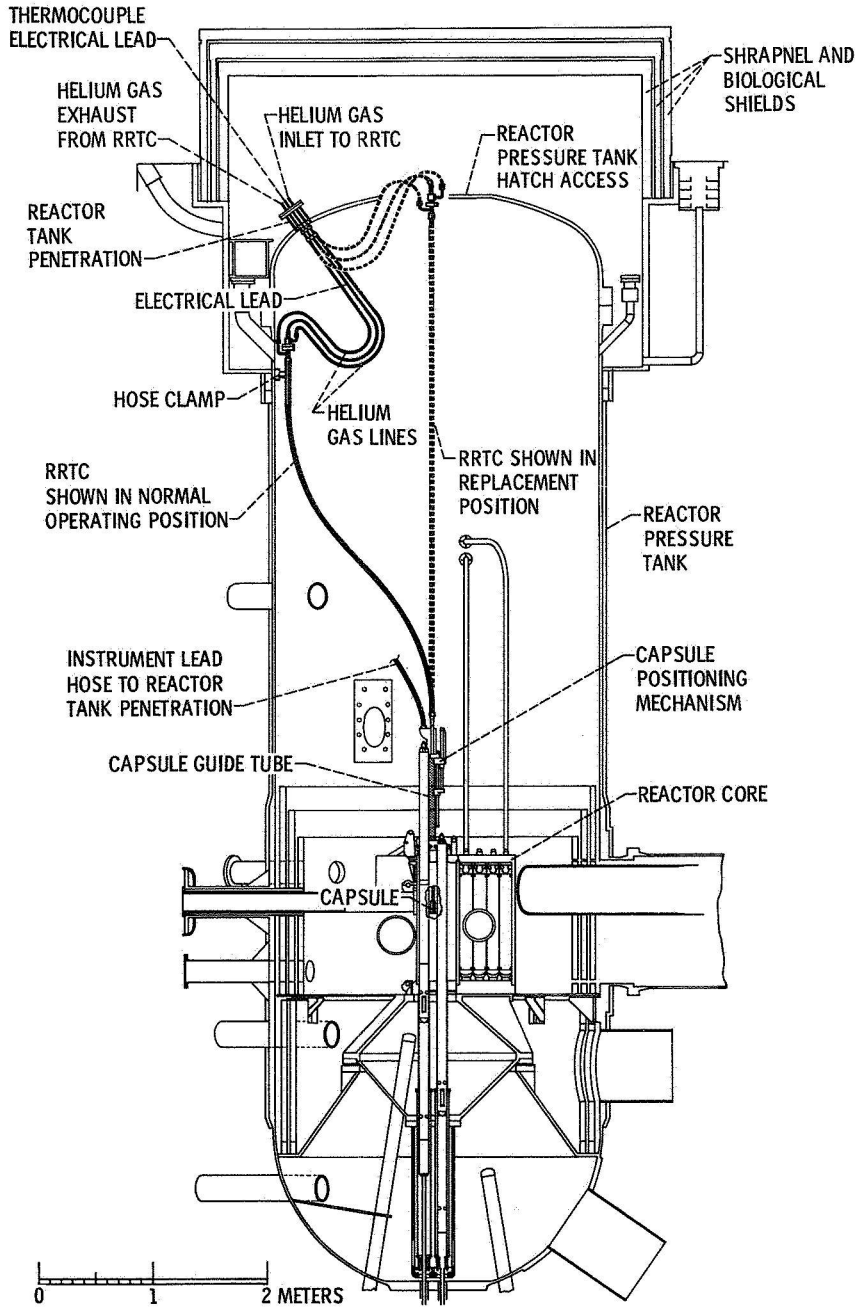

Figure 5. - Capsule installation in the Plum Brook reactor.

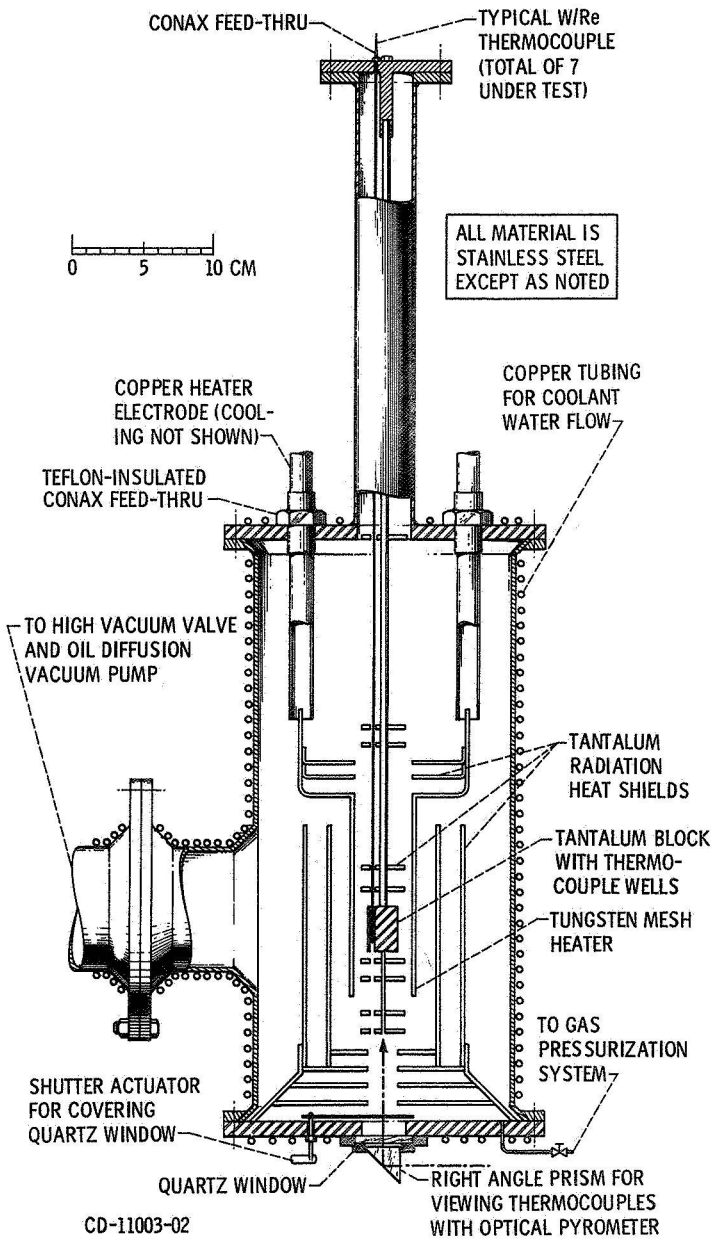

Figure 6. - Out-of-pile test furnace.

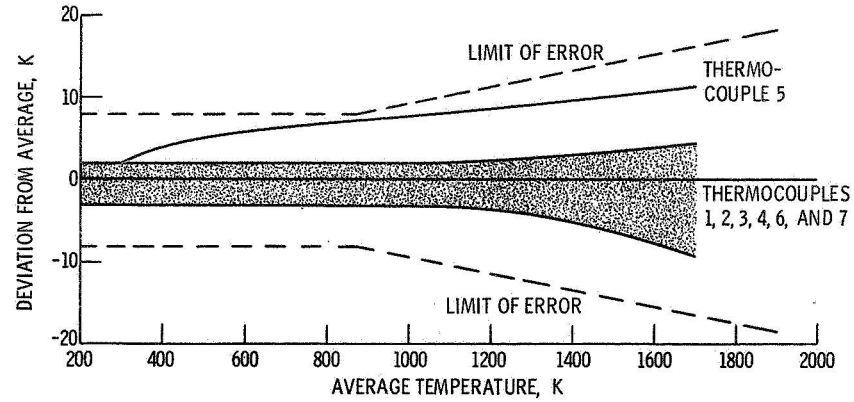

Figure 7. Initial deviation of W3%Re/W25%Re thermocouples in irradiation capsule when electrically heated.

E-6290

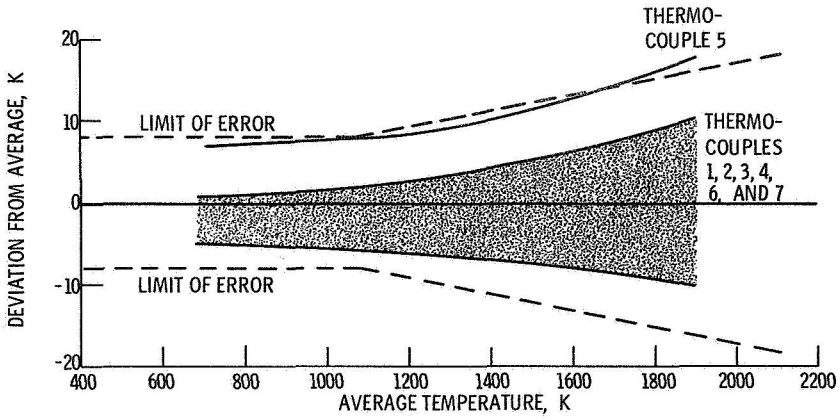

Figure 8. - Initial deviation of W3%Re/W25%Re thermocouples in irradiation capsule when gamma heated.

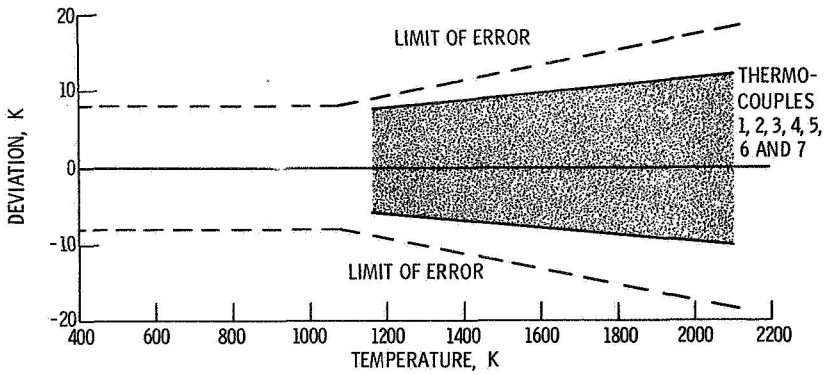

Figure 9. - Initial deviation of W3%Re/W25%Re thermocouples in furnace.

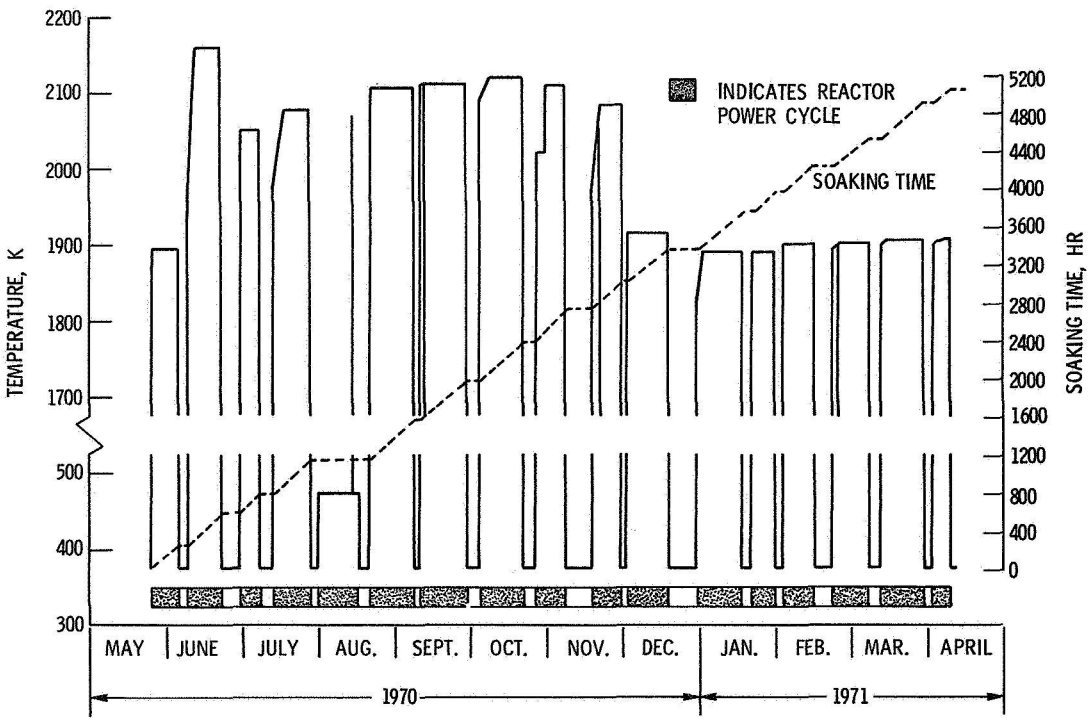

Figure 10. - Temperature history.

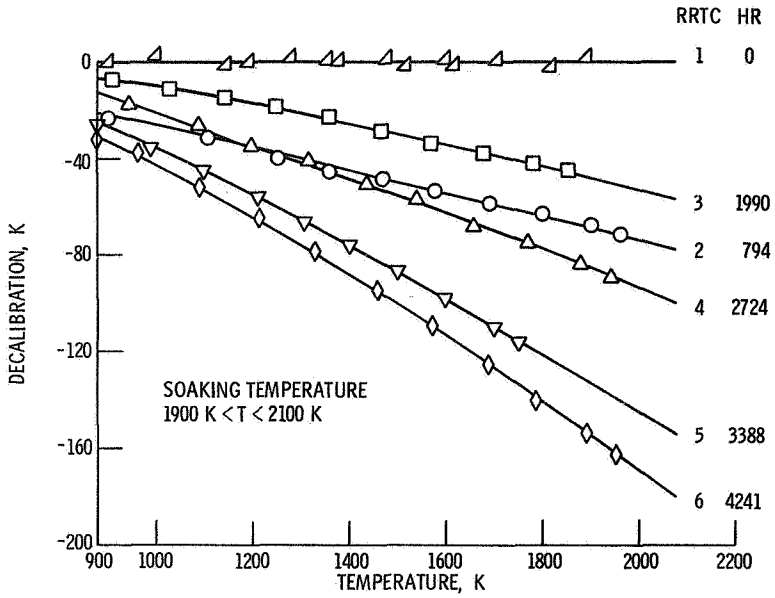

Figure 11. - Calibration results of irradiated W3%Re/W25%Re thermocouples.

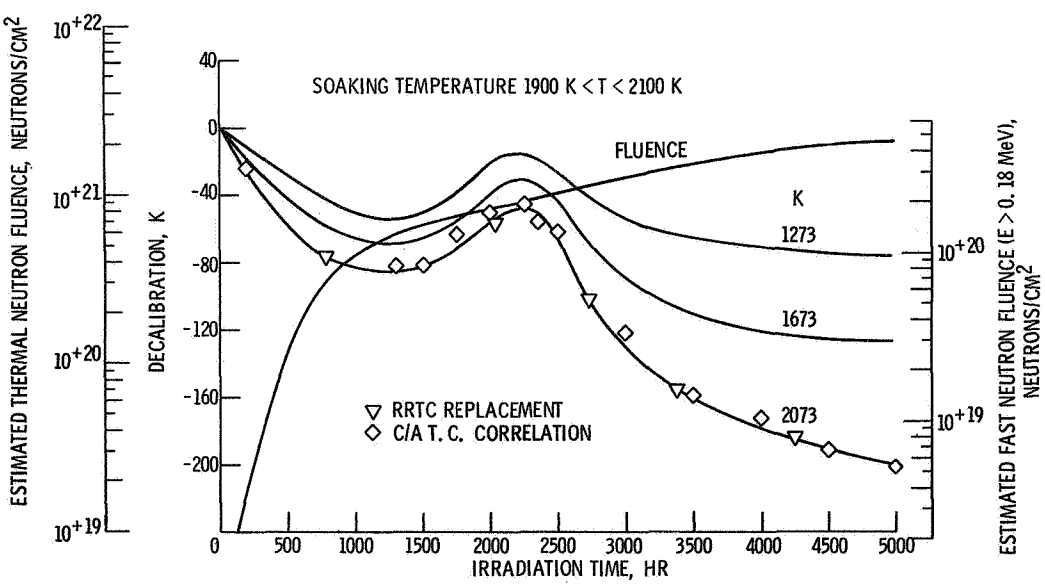

Figure 12. - Drift of irradiated W3%Re/W25%Re thermocouples.

E-6290

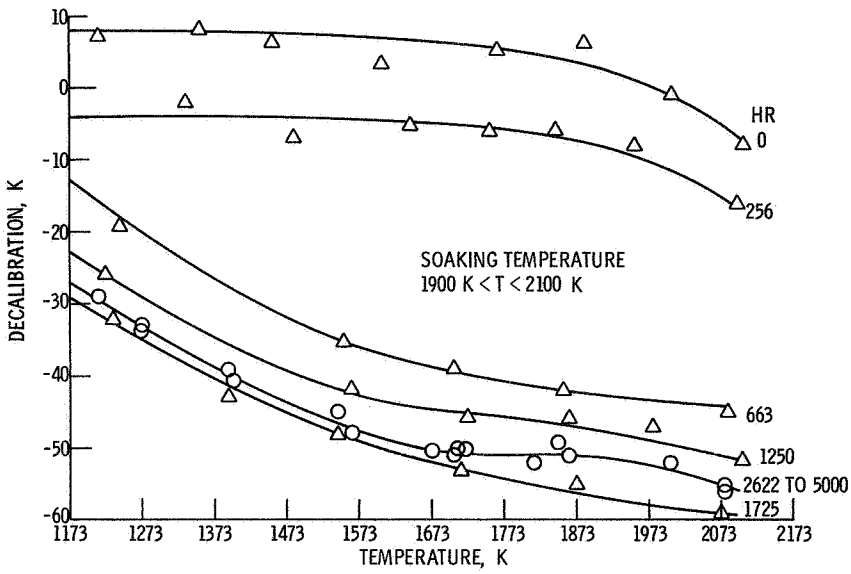

Figure 13. - Calibration results of unirradiated W3%Re/W25%Re thermocouples.

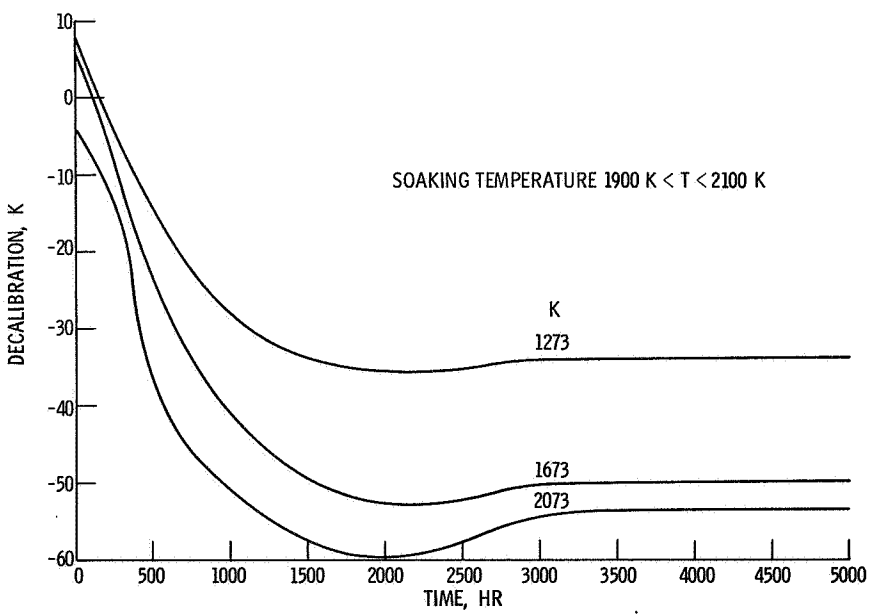

Figure 14. - Drift of unirradiated W3%Re/W25%Re thermocouples.

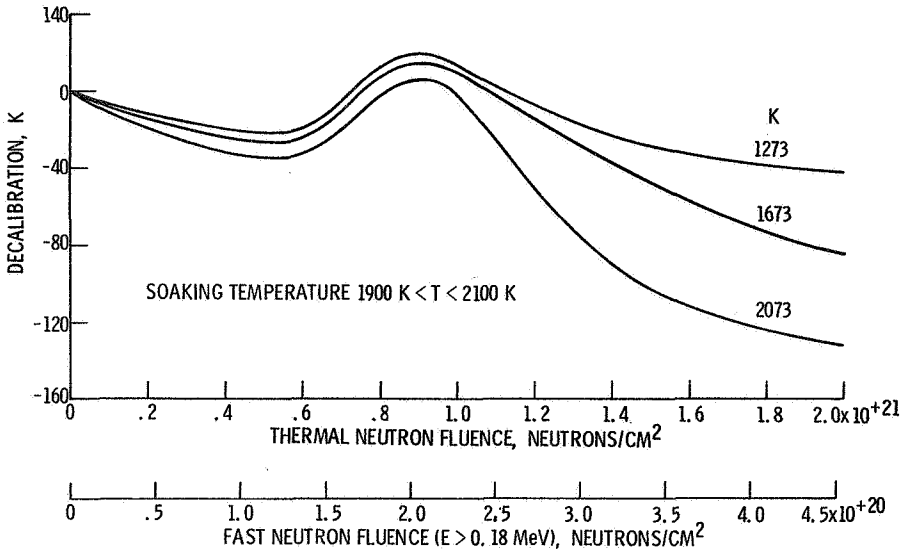

Figure 15. - Nuclear radiation effects on W3%Re/W25%Re thermocouples, determined using gamma heating.

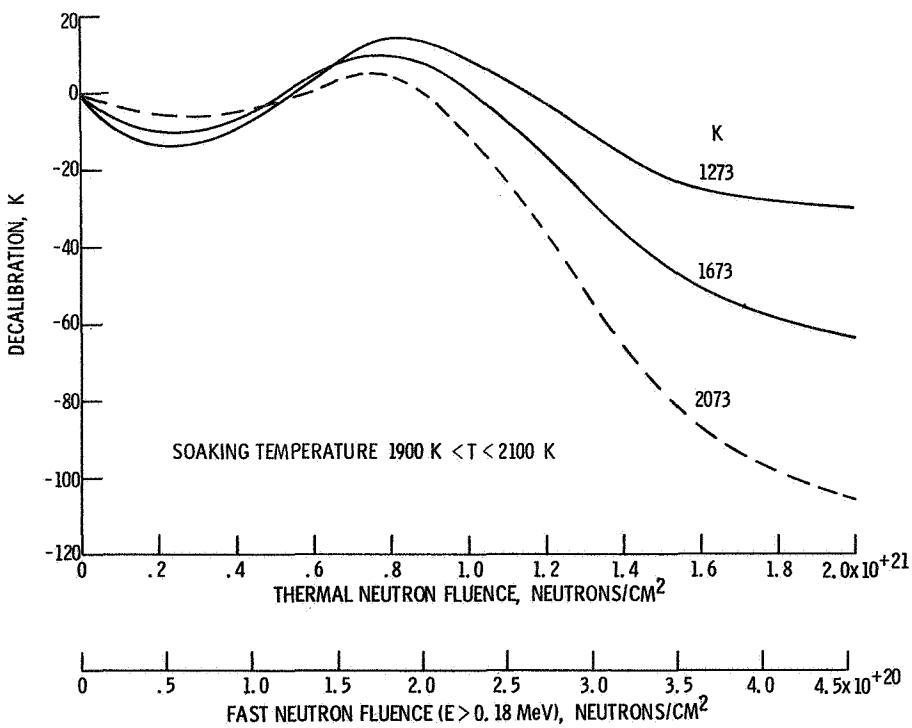

Figure 16. - Nuclear radiation effects on W3%Re/W25%Re thermocouples, determined using electrical heating.