VIKING GC/MS MECHANISMS DESIGN AND PERFORMANCE

By C. Peter Chase and August O. Weilbach

Advanced Technology Operations
Beckman Instruments, Inc.

ABSTRACT

The Viking Lander Gas Chromatograph/Mass Spectrometer will analyze pyrolyzed samples of the Martian surface for organic content. The Surface-Sample Loader and Pyrolyzer Assembly (SSLPA) is described, along with the major problems encountered during design and testing. Three mechanisms were developed to implement the required SSLPA functions: (1) a soil loader that forces soil from a filled rotating funnel into each of three ovens located on a carriage, (2) a Geneva drive for rotating and precisely indexing the ovens to receive sample, and (3) a toggle-clamp mechanism for sealing the ovens by forcing circular double knife edges into gold sealing surfaces.

INTRODUCTION

The "laboratory" launched the afternoon of 20 August 1975 from Kennedy Space Center contained sophisticated instruments for experiments on Mars. Newspaper accounts of the mission focused on these experiments, especially those for detecting evidence of life. Some accounts mentioned the instruments themselves. None described the intricate mechanisms that made the experiments possible. This paper describes one such mechanism--the Surface-Sample Loading and Pyrolyzing Assembly for the gas chromatograph/mass spectrometer (GC/MS) instrument.

THE GC/MS EXPERIMENT

The basic concept of the GC/MS experiment is to perform analyses on organic matter in soil samples by pyrolyzing the soil sample (i.e., heating the sample to a high temperature, causing the breakdown of organic matter to volatile products) and then separating the components of the pyrolyzed organic matter with a gas chromatograph. As each separated component elutes from the gas chromatograph, it is identified by a mass spectrometer using the known fragmentation pattern of the component. The results of these analyses will be a guide in determining the presence of biological organic matter. Also, because the pyrolysis of each class of biological compounds gives characteristic and predictable products, it is possible to deduce what classes of organic material were originally present in the soil and to obtain an indication of how much was present.

The crucial part of the experiment is sample handling and pyrolysis, which is carried out by the Surface-Sample Loading and Pyrolyzing Assembly (SSLPA).

SSLPA FUNCTIONAL DESCRIPTION (Figure 1)

The SSLPA consists of a soil loader, an oven carriage and indexing mechanism, an oven-seal clamping mechanism, two prime movers, and the necessary drive systems. The principal functions of the SSLPA are to:

- Receive a soil sample from the Viking Lander Sample Processor.
- Load and pack the soil into one of three ovens suspended in the oven carriage.
- Rotate and index the oven carriage.
- Clamp and seal the oven.
- Pyrolyze the soil in the oven at a selected temperature, while flushing the effluents to the gas chromatograph.
- Dump and clean out the excess soil from the soil loader and repeat on command the above functions for the other two ovens.

The soil loader rotates and taps the soil inlet funnel as a reciprocating plunger directs and packs the soil sample through the funnel exit into one of three 60-$\mu\ell$ ovens. All these movements are achieved by an arrangement of a pair of helical gears, a spur gear pair, a slider crank, and a spring-loaded tapping follower. The carriage then rotates, indexing the filled oven to the next station and bringing a dump cavity under the inlet funnel. The soil loader mechanism cleans out the soil remaining in the funnel, dumping it into the reservoir in preparation for receiving another soil sample.

The ovens and dump cavities are located on a rotating carriage indexed by a Geneva drive. The carriage has seven stations--six for oven and dump reservoirs and one non-operating station for transit to Mars.

Oven-seal clamping is achieved by a four-bar toggle-clamp mechanism operated by a motor-driven cam. The linkage forces a set of circular knife edges into gold discs at both ends of the ovens, plastically deforming the discs to form a seal with a leak rate less than 1 x 10^{-9} scc/s helium at one atmosphere. Only 1.1 kg (2.5 lb) input force is required at the cam to impart 20 kg (45 lb) force into the gold discs.

The ovens are suspended by triangular stainless steel spring washers, which thermally isolate the ovens and apply a preload for holding them in place under vibration and *g* loads. All power and sensor connections to the ovens are hard wired using a flexible cable that permits unrestrained rotation of the oven carriage through one full cycle.

All precision mechanisms are susceptible to failure from particulate contamination. To prevent failure of the GC/MS mechanisms from sample contamination, the motors are sealed, the one-way clutch uses a labyrinth seal, and shielded ball bearings are used to minimize friction.

SOIL LOADER MECHANISM (Figure 2)

The soil loader receives soil sample from the Lander Sample Processor via a simple gravity feed. However, once sample is in the inlet funnel of the soil loader, a mechanism is needed to load the sample into the three ovens and clean the funnel between loadings to prevent sample cross contamination in excess of 10 percent. The main problems encountered were: (1) maintaining sample flow through the narrow funnel exit opening--1.5 mm (0.058 inch)--and into the ovens through their matching 1.5 mm opening without plugging; (2) cleaning the funnel of residual sample; and (3) loading the ovens with a reproducible amount of sample. These problems were further complicated by the range of sample particle size, particle configuration, and moisture content that had to be accommodated.

The original design used an oscillating rod tangential to the inside of the funnel for poking the soil into the ovens. The funnel was rotated, causing the rod to scrape the soil from the sides of the funnel. However, even though the rod was close-fitted to the wall of the funnel, soil packed underneath it, forcing it away from the wall and defeating its use as a scraper. Additionally, the 90-degree end surface of the rod caused plugging at the funnel exit opening, preventing reliable, complete filling of the ovens.

Two simple design changes solved both problems. First, the poker cross section was changed from circular to triangular, providing a sharp edge for scraping the inside wall of the rotating funnel and adding rigidity to prevent any lifting action. Second, the poker end was tapered to a 30-degree angle, allowing excess sample to flow back over the face of the poker tip as it penetrated the narrow exit opening. This design change eliminated plugging and improved oven loading and sample packing consistency.

In its original concept the poker was guided and supported by a complex linkage. During tests of the soil loader, it became apparent that an improved mechanism was needed. The new mechanism had to provide better alignment of the poker rod with the funnel and work with less friction and less effect from soil induced interference. A small ball bushing was selected as an alternative support and low friction was obtained. During testing of the engineering model it became apparent that the bushing idea worked but new soil testing requirements required more force on the poker mechanism. Within permissible space a next larger bushing was installed, solving the problem.

Another problem was filling the very narrow 60-μℓ ovens with a known and reproducible amount of sample. It was initially believed that this could be accomplished by sensing the resistance of the poker to sample packing force and turning the loader mechanism off at a predetermined resistance force. This approach turned out to be unduly complex and unreliable. The approach finally selected was simply to load for a fixed time sufficient to guarantee loading a worst-case sample.

As shown in Figure 3, the soil loader mechanism is driven by a 150-r/min motor on whose shaft is attached a helical gear. This gear drives another helical gear at right angles and at the same speed of 150 r/min. The second helical gear is fixed to the crank shaft. The crank drives a connecting rod which, in turn, drives a shaft guided by a linear bearing. Rigidly attached to the guided shaft is the poker, which reciprocates at 150 cycles per minute in the funnel. The first helical gear has, on the same shaft, a spur pinion and a four-lobed cam. The pinion drives another gear attached to the funnel. The funnel thus rotates at approximately 27 r/min. The funnel tapper is spring-loaded against the cam, causing it to tap the funnel wall as the funnel rotates.

OVEN CARRIAGE AND INDEXING MECHANISM (Figure 3)

The oven carriage holds three sample ovens and a flight oven, two dump cavities, and a flush tube--seven stations in all. Indexing precisely positions the seven stations for each operation.

The primary design feature is the indexing mechanism. Initially, it was conceived as a spring-loaded ratchet and pawl mechanism, but this design was discarded because of its complexity, high power requirements, and inadequate accuracy and reliability. A Geneva drive mechanism was selected since its inherent characteristics closely matched the design requirements. It is extremely simple, requires very little power, provides precise indexing, and is highly reliable. It was the ideal mechanism for the application.

The Geneva drive is powered by the same motor used for the soil loader. On command, an electrical clutch engages and a gear set transmits the motion to the Geneva drive. The actuator drives the Geneva wheel, which is an integral part of the carriage. It takes two revolutions of the drive wheel to index the carriage one station. This arrangement, because of the inherently-accurate position capability of a Geneva drive, assures a smooth and positive transition from one station to another.

Position status indication is provided by a 3-bit binary code on a thin disc attached to the carriage. The encoder head is implemented with light-emitting diodes and photosensitive detectors. The functional sequence (see Figure 4) is as follows:

- An oven is readied for receiving the sample by a preheat cycle at 500°C for about 1 minute in order to clean out possible residual contamination.
- With the oven placed under the loader, soil is fed from the loader and compacted by the poker of the soil-loading mechanism.
- The oven is indexed to the pyrolysis station, where it is clamped and sealed.
- Simultaneously, a dump cavity is positioned to receive the residual sample from the loader.

As a loaded oven is indexed to the pyrolysis station, residual soil on the surface of the oven seal is removed by the wiping action of a set of thin flexible metal blades. Any remaining fine particles--down in the 5 μm size or less--do not interfere with hermetic closure of the oven.

OVEN-SEAL CLAMPING MECHANISM (Figures 4 and 5)

Sealing the ovens to attain a leak rate no greater than 2×10^{-5} scc/s of helium presents several problems. The seal has to be effective in the presence of soil particles up to 5 μm that might not be wiped away by the metal blades, it has to be maintained at high temperatures, and there has to be a mechanism for applying sufficient force to attain the seal and maintain it during analysis.

The initial design approach to sealing was to force circular knife edges into gold discs brazed to both ends of the ovens. Although a satisfactory seal was obtained at the shearing surfaces between the knife edge and the disc under ideal conditions, when soil particles were present they caused leak rates in excess of the requirement. Also, the gold tended to cold-flow away from the knife edge, deteriorating the seal.

The solution was a two-edged knife (see Figure 4), which solves both the cold-flow and particle problems. The two edges prevent the entrapped gold from extruding and they provide a redundant seal that increases reliability and reduces leakage to an acceptable rate.

There were a number of possible implementations explored for applying a sufficient force to the circular knife edges to obtain the required seal. But in addition to the force required to make the initial seal, there was also the problem of maintaining the seal as the gold softened during oven heating. This required a controlled spring rate that would cause additional knife penetration as required to maintain the seal.

The toggle-clamp mechanism (Figure 5) selected is ideal for applying force. It is simple, fits the space available for clamping movement, and attains its greatest clamping force as it approaches its 180-degree stop position. The corresponding force imparted to the eccentric is only about 1.1 kg (2.5 lb)--a force easily achieved with the drive system used. Additionally, by selecting a flexing arm design and using it as a spring for the top and bottom clamp arms, the required uniform spring rate is attained to maintain the seal throughout the oven heating cycle.

PRIME MOVERS

Actuation of the pyrolyzer mechanisms is performed by two geared hysteresis synchronous motors enclosed in beryllium housings. One motor, rotating at approximately 8 r/min, drives the oven-seal clamp mechanism. The second motor drives the soil loader at 150 r/min. An electric clutch with a reducing gear train couples the second motor to the Geneva drive for indexing the oven carriage.

The selection of this type of prime mover permits a low profile package with a relatively high stall and high drive torque; the latter is needed especially for the clamping mechanism. Reduction of the rotor speed down to the output shaft is achieved by an integral gear train.

Potential contamination from the motor into the pyrolyzer assembly is prevented by using chevron-type seals at the drive shaft exit. Since this type of device seals well, balancing of internal to external pressure is achieved through a 2-μm filter built into the lower end of the motor case.

OTHER PROBLEMS

Contamination control requirements for the final assembly were extremely stringent. During the cleaning procedure the dry lubricant applied in small quantity to the gears and ball bearings did not survive the original cleaning process applied at the White Sands clean room facility. This process was eventually modified for particular components.

The size and weight requirements for the SSLPA necessitated the use of such materials as beryllium, titanium, and magnesium. Custom miniaturization of electrical connectors, plumbing components, clutches, and motors was also required.

During thermal vacuum testing, Vespel* shrank up to 10 percent and future design efforts were required to take this unexpected performance into consideration.

CONCLUSION

The mechanisms described, although not unique, have been implemented to meet the system environmental and performance requirements. The problems of lubrication, material limitations, and severe environments made the design a challenge. The final design takes advantage of these simple mechanisms with relatively few moving parts to maintain a highly reliable system. The extensive testing program, which included soil loading with various soil models, oven sealing after loading, and environmental testing, has validated this design approach. There were several significant outcomes of this design and testing effort. First, the ability to eliminate conventional lubricants when compatible materials are used as wear surfaces was tested. Even though extensive cleaning was performed on the pieces and the finished assembly, no "cold welding" or galling problems were encountered during testing. Second, it is possible to design precision mechanisms that are tolerant of particulate contamination, such as excess soil. Third, the repeated assembly and disassembly of the unit in the clean room can be accomplished without impact on the system performance.

---

*Registered trademark of duPont.

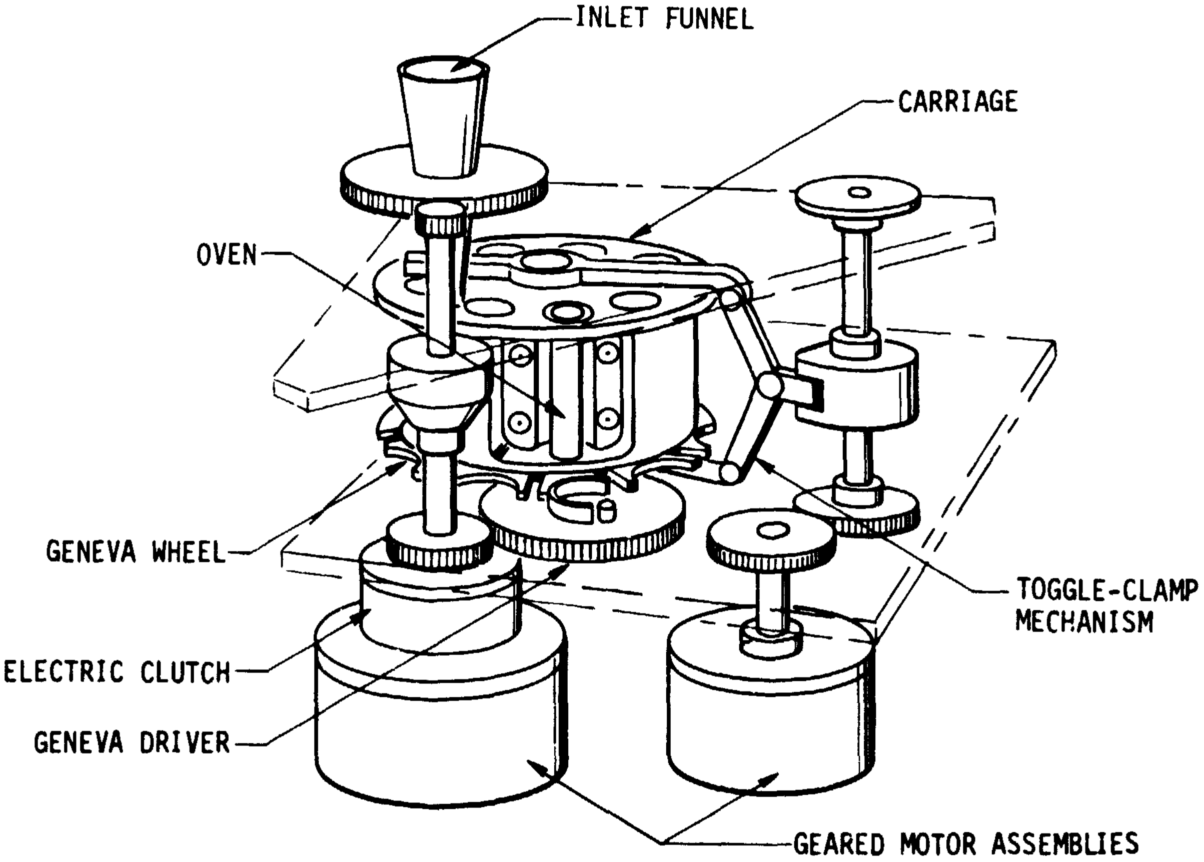

Figure 1a. Diagram of Surface-Sample Loading and Pyrolyzing Assembly (SSLPA).

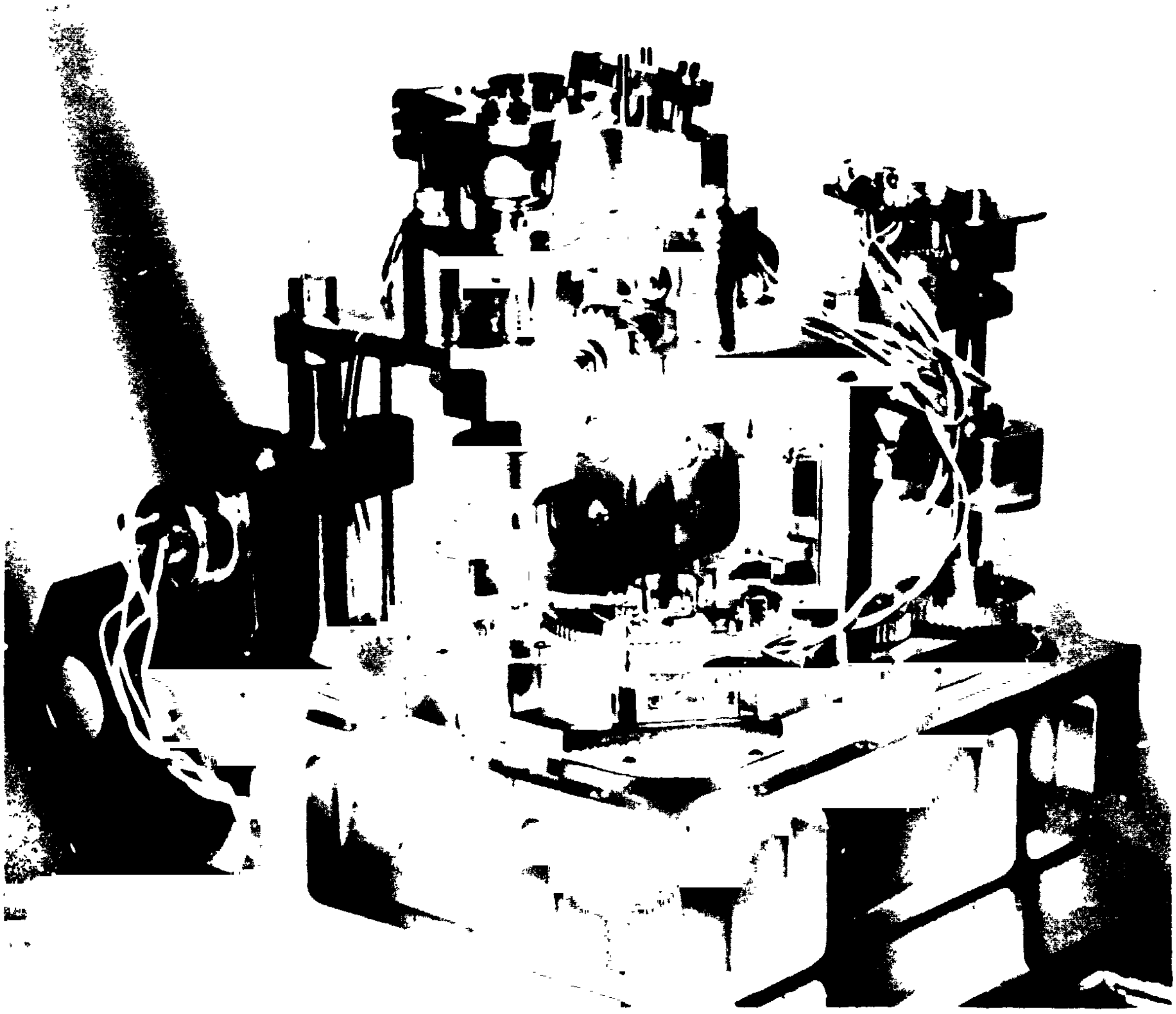

Figure 1b. Complete SSLPA Without Cover

REPRODUCIBILITY OF THE ORIGINAL PAGE IS POOR

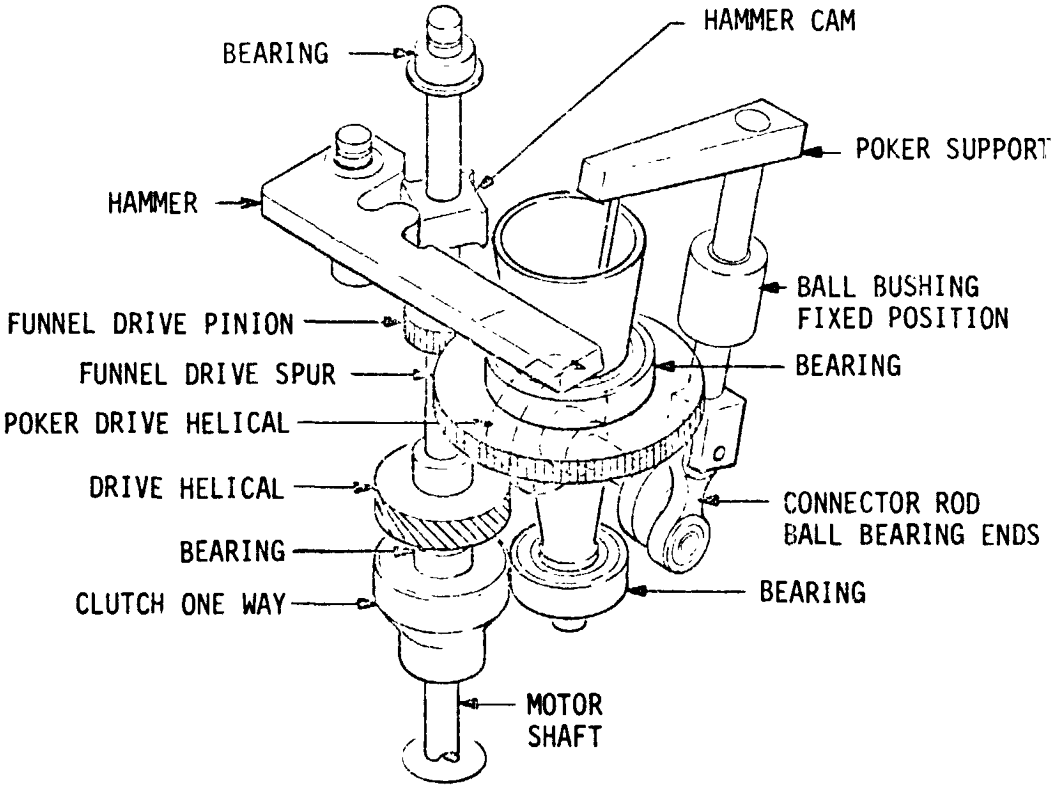

Figure 2. Soil Loader Mechanism

Figure 3a. Oven Carriage and Indexing Mechanism

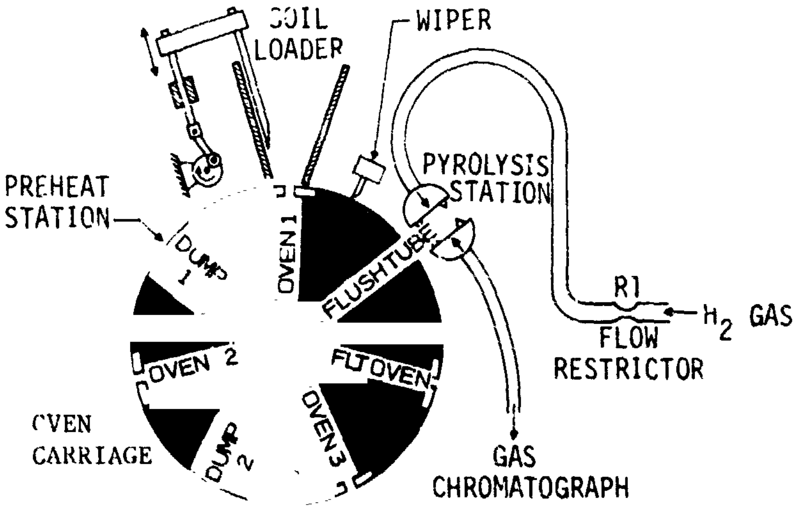

Figure 3b. Functional Sequence Diagram

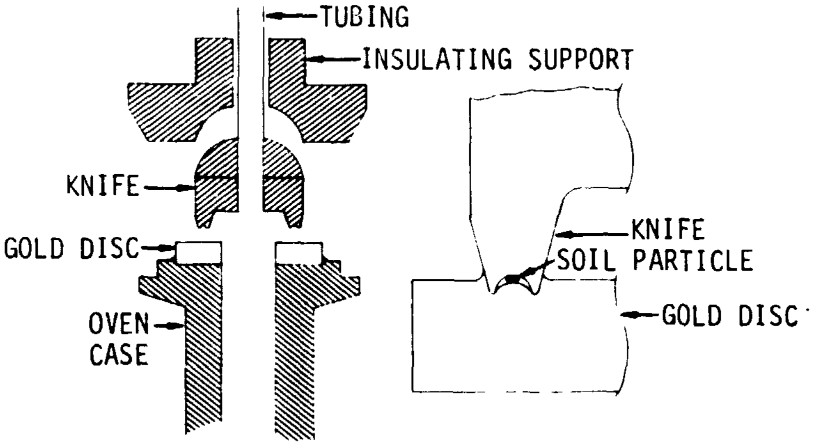

Figure 4. Oven Sealing Concept

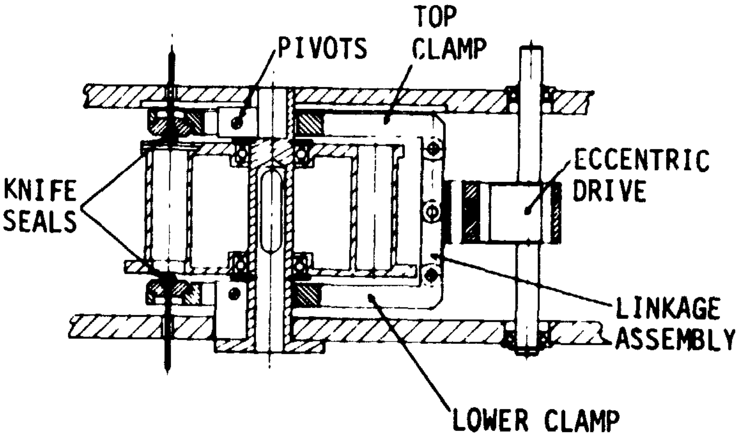

Figure 5. Oven-Seal Clamping Mechanism