DESIGN AND ANALYSIS OF A PLATE-FIN SANDWICH ACTIVELY COOLED STRUCTURAL PANEL

L. M. Smith
Rockwell International
Space Systems Group

DESIGN & ANALYSIS OF A PLATE-FIN SANDWICH ACTIVELY COOLED STRUCTURAL PANEL*

L. M. Smith
Rockwell International

INTRODUCTION

The skin structure of hydrogen fueled hypersonic transport vehicles traveling at Mach 6 and above must be designed to withstand, for relatively long periods of time, the aerodynamic heating effects which are far more severe than those encountered by the supersonic aircraft of today. Three basic design options are available which will accommodate this aerodynamic heating. First, the use of conventional aircraft materials such as aluminum in combination with forced convection active cooling; Second, the use of radiative metallic heat shields; and Third, a combination of active cooling and radiative heat shields. This work addresses the first or active cooling option.

The basic active cooling concept, shown in Figure 1, consists of a stringer stiffened plate-fin sandwich. The sandwich surface is subjected to the aerodynamic heat flux which is transferred, via convection, to a coolant that is forced through the sandwich under pressure. The coolant, in turn, circulates in a closed loop through a hydrogen heat exchanger and back through the skin panel. The systems' aspects of the coolant loop and the hydrogen heat exchanger are not addressed in this paper.

*This paper summarizes a final report (Ref. 1) on a design and analysis effort conducted under contract NAS1-13382 with LaRC.

STRINGER STIFFENED PLATE-FIN SANDWICH
ACTIVE COOLING CONCEPT

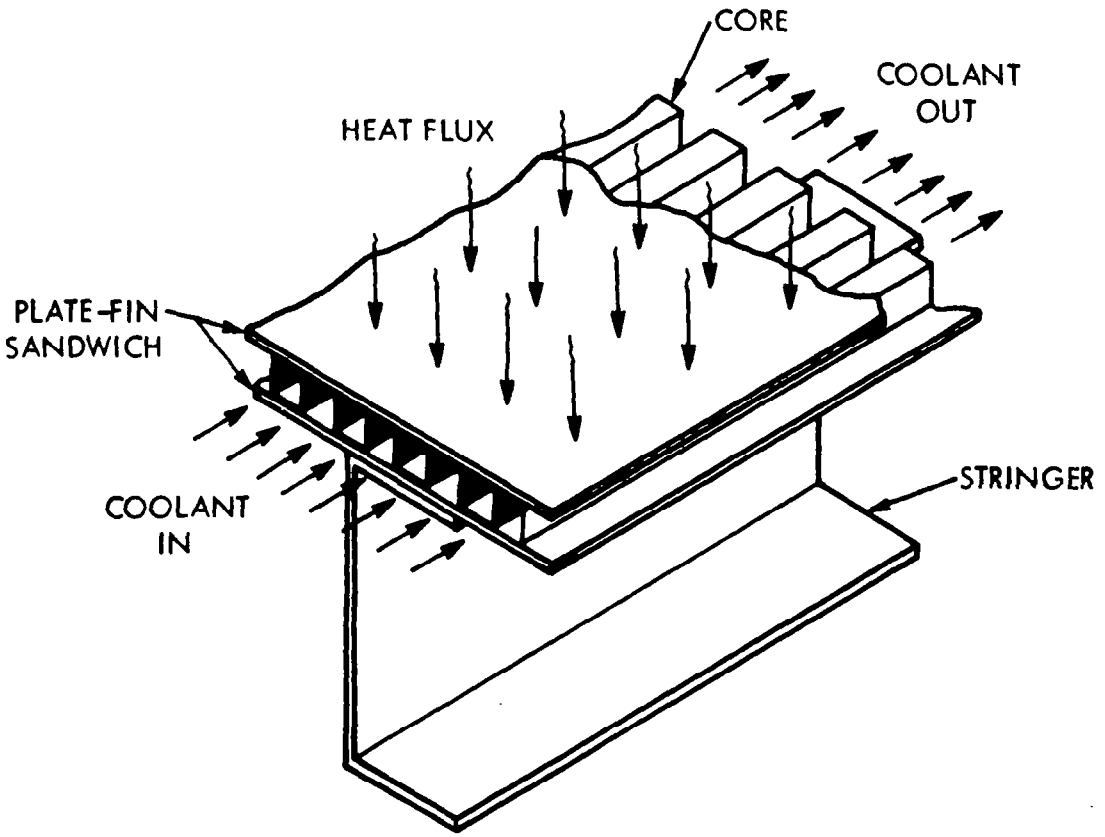

Figure 1

DESIGN REQUIREMENTS & CRITERIA

(Figure 2)

Figure 2 illustrates in pictorial and tabular form the design requirements and criteria used for the design and analysis of a full scale actively cooled structural panel. The panel size, frame spacing, mechanical and thermal environment, and life requirements were established by NASA and are meant to be representative of the requirements that an actively cooled structural panel would encounter in actual application to a hypersonic aircraft. The physical loads factor of safety of 1.5 is consistent with federal standards for aircraft design and the thermal loads factor of safety of 1.0 is consistent with Rockwell requirements for elevated temperature structures such as Apollo, Shuttle and B-1.

The structure temperature limitation of 422 K (300°F) is consistent with an approximate 20 percent structural aluminum mechanical properties degradation (compared with room temperature values of ultimate tensile strength, ultimate shear strength, etc.). This temperature, 422 K (300°F), is generally considered to be the maximum temperature at which structural performance of aluminum alloys can be predicted accurately. The maximum allowable coolant temperature of 366 K (200°F) is conservative and provides an adequate margin before elevated temperature corrosion mechanisms become a serious consideration.

FULL SCALE PANEL DESIGN REQUIREMENTS

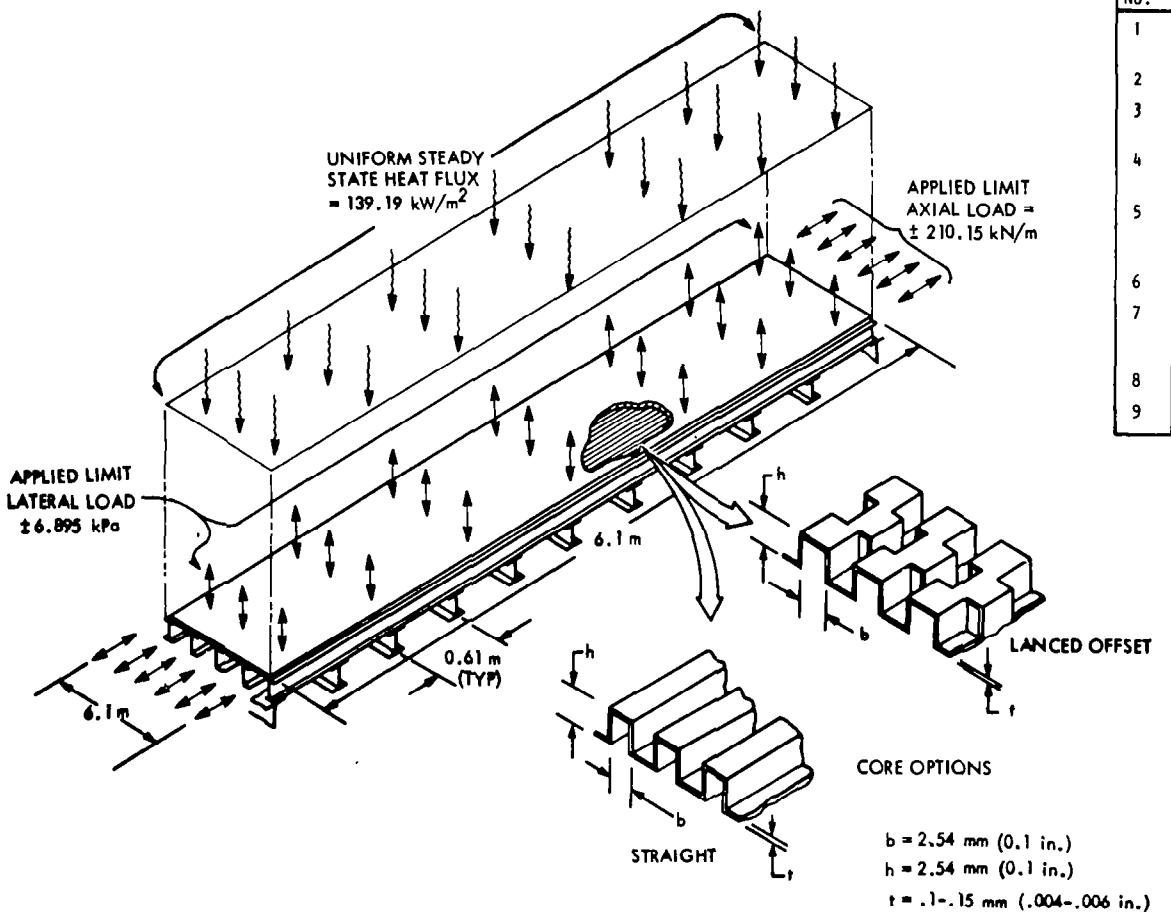

ITEM NO.	PARAMETER	REQMT/CRITERIA
1	CONSTRUCTION TYPE	STRINGER STIFFENED SANDWICH
2	PANEL MATERIAL	ALUMINUM
3	COOLANT	ETHYLENE GLYCOL/ WATER
4	COOLANT OUTLET PRESSURE	344.75 kPa (50 psi) MINIMUM
5	LOAD CYCLES	5000 WITH SCATTER FACTOR = 4 (e.g., 20,000)
6	FLIGHT LIFE	10,000 HOURS
7	FACTOR OR SAFETY PHYSICAL LOADS THERMAL LOADS	1.5 1.0
8	STRUCTURE TEMP.	422°K (300°F) MAX
9	COOLANT TEMP.	366°K (200°F) MAX

Figure 2

FULL SCALE ACTIVELY COOLED PANEL DESIGN PROCESS

(Figure 3)

The objective of this program was not only to develop the design of a full scale stringer stiffened plate-fin sandwich actively cooled panel but also to fabricate, for test by NASA/LaRC, a test panel representative of the resulting design. To develop confidence in the design and fabrication techniques and the ability of the test panel to withstand the structural and thermal test environment, the program was conducted in essentially five (5) phases as indicated on the flow chart, Figure 3. Each phase will be discussed during this presentation.

FULL SCALE ACTIVELY COOLED PANEL DESIGN PROCESS

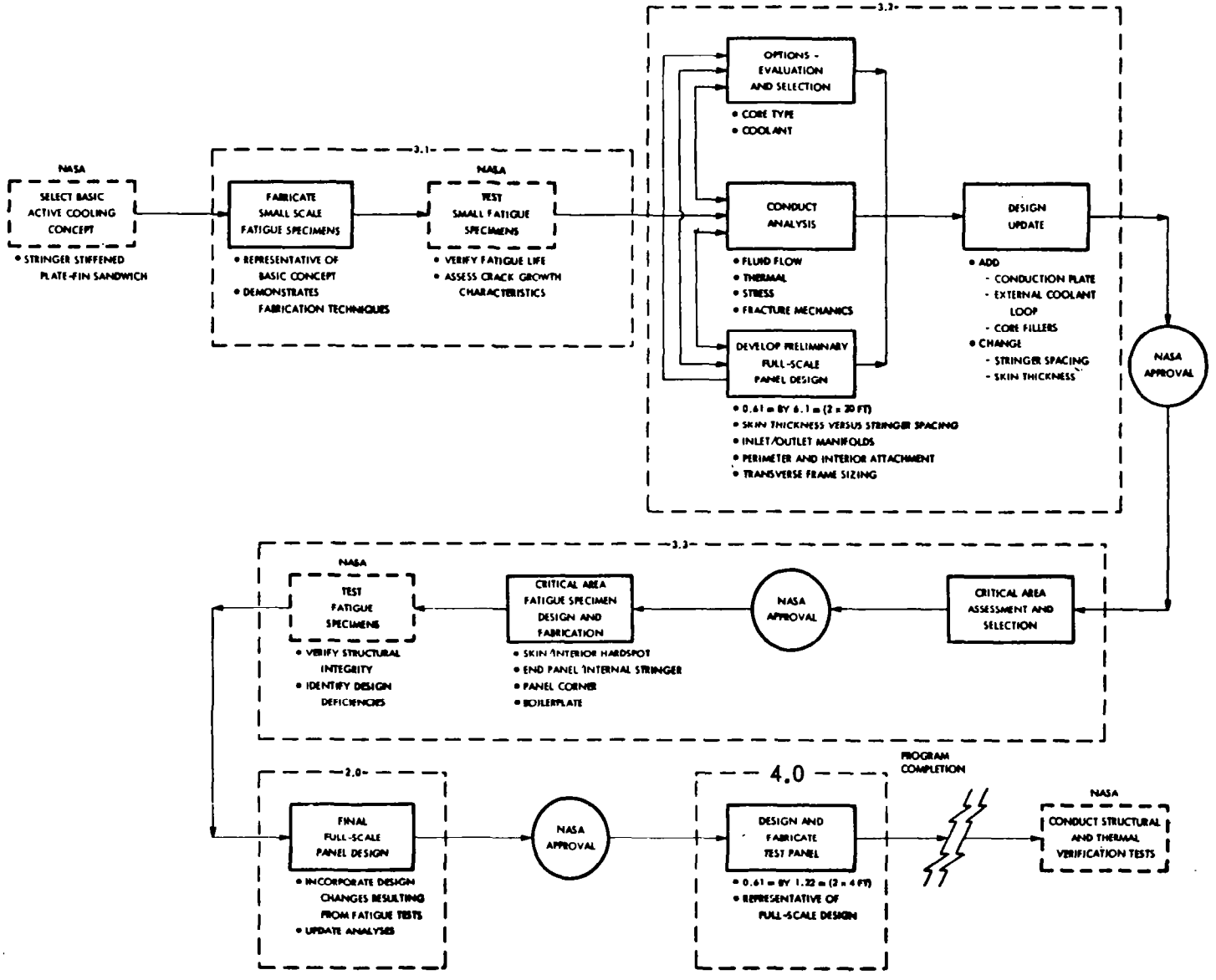

Figure 3

SMALL SCALE TEST SPECIMEN

(Figure 4)

The initial phase of the program consisted of the fabrication of eight (8) small scale test specimens, whose basic configuration is a plate-fin sandwich structure terminating on either end in load adapters. Four (4) specimens were fabricated with straight core and the remainder with lanced offset core. In both cases, the core material is 0.127 mm (0.005 in.) thick 6061 aluminum formed by the supplier into a corrugated core 2.54 mm (0.10 in.) high with a pitch of 3.94 coolant channels per centimeter (10/in.). The face sheets are 0.51 mm (0.020 in.) thick ALCOA No. 21F braze sheets of 6951 aluminum alloy clad on one side with 4045 braze alloy. The specimen width is 0.13 m (5.12 in), the test section is 0.175 m (6.90 in.) long and the overall specimen length (including load adapters) is 0.39 m (15.50 in.). Each specimen has four (4) fluid access ports which are machined into the specimen after brazing and heat treatment.

The objectives of this phase of the program were: (1) to verify that acceptable fabrication results could be obtained from the Rockwell developed fluxless brazing and heat treatment processes and (2) to determine, by NASA test, if the concept, as fabricated, could survive the 20,000 cycle fatigue life requirement with and without intentionally placed cracks or flaws in the face sheets. Both objectives were met successfully.

The specimens were tested by NASA at room temperature with an internal lockup pressure of 689.5 kPa (100 psi) to a fully reversed (R = -1) alternating stress level of 124 MPa (18,000 psi). Results showed that: (1) both core configurations can meet the 20,000 cycle design requirement; (2) the straight core has a greater fatigue life than the lanced offset core; (3) even with surface flaw intentionally placed in the face sheets, the 20,000 cycle requirement was exceeded; and (4) once a flaw became a through crack, at least 1,400 additional cycles were required to produce a structural failure.

SMALL SCALE TEST SPECIMEN

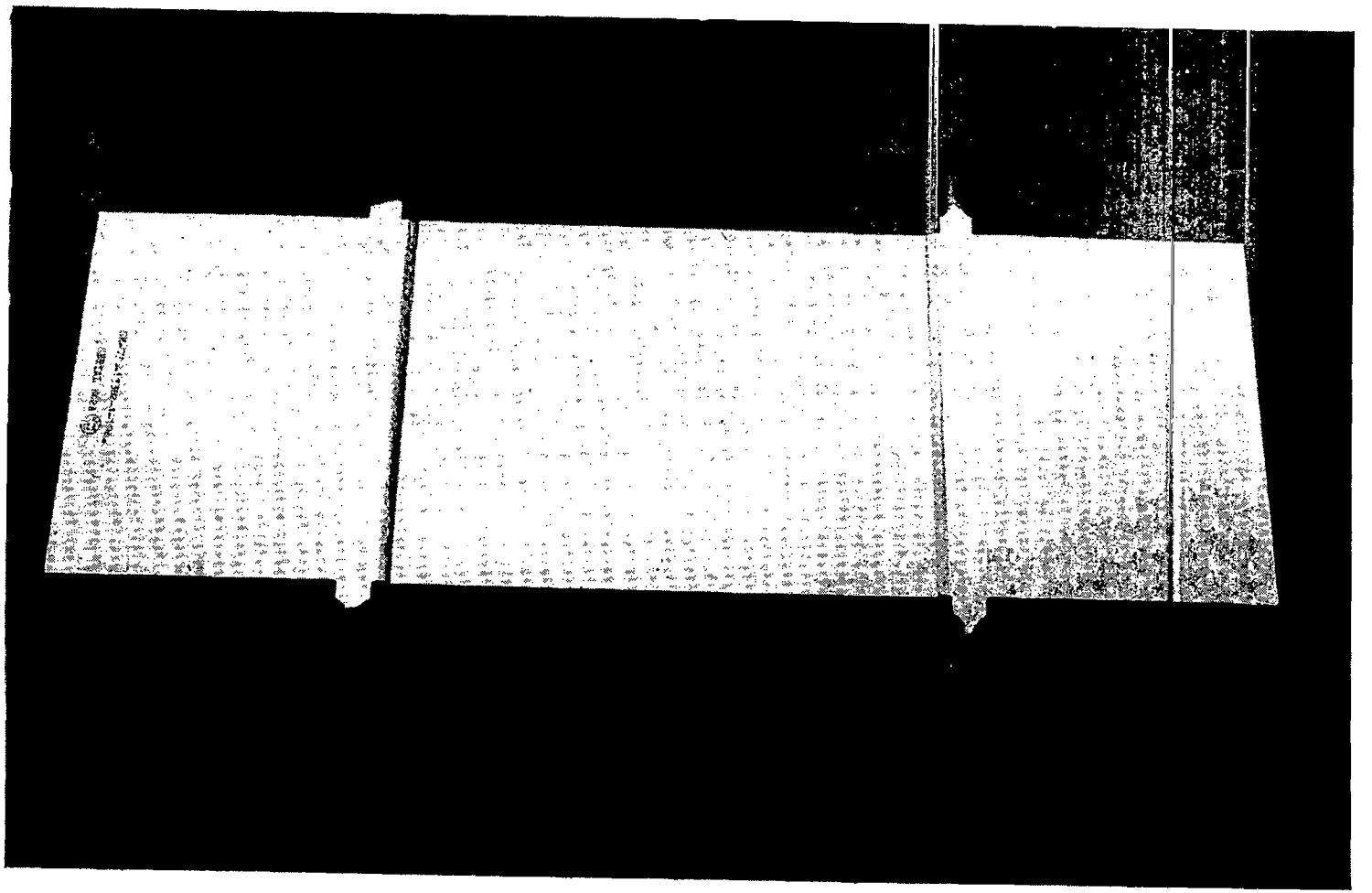

Figure 4

FINAL FULL SCALE ACTIVELY COOLED STRUCTURAL PANEL CONFIGURATION

(Figure 5)

Figure 5 depicts schematically the final full scale panel configuration. It consists of: (1) a 0.61 m by 6.1 m (2 by 20 ft) plate-fin brazed sandwich structure which is 4.17 mm (0.164 in.) thick except adjacent to the perimeter where the thickness is increased to 5.69 mm (0.224 in.); (2) inlet and outlet manifolds; (3) two edge stringers (I-sections); (4) three (3) internal stringers in the form of channel sections; and (5) associated bracketry and attachment hardware. It should be noted that the edge stringers provide the attachment base for adjacent panels, hence only one edge stringer is considered when panel mass is calculated.

FINAL FULL SCALE ACTIVELY COOLED STRUCTURAL PANEL CONFIGURATION

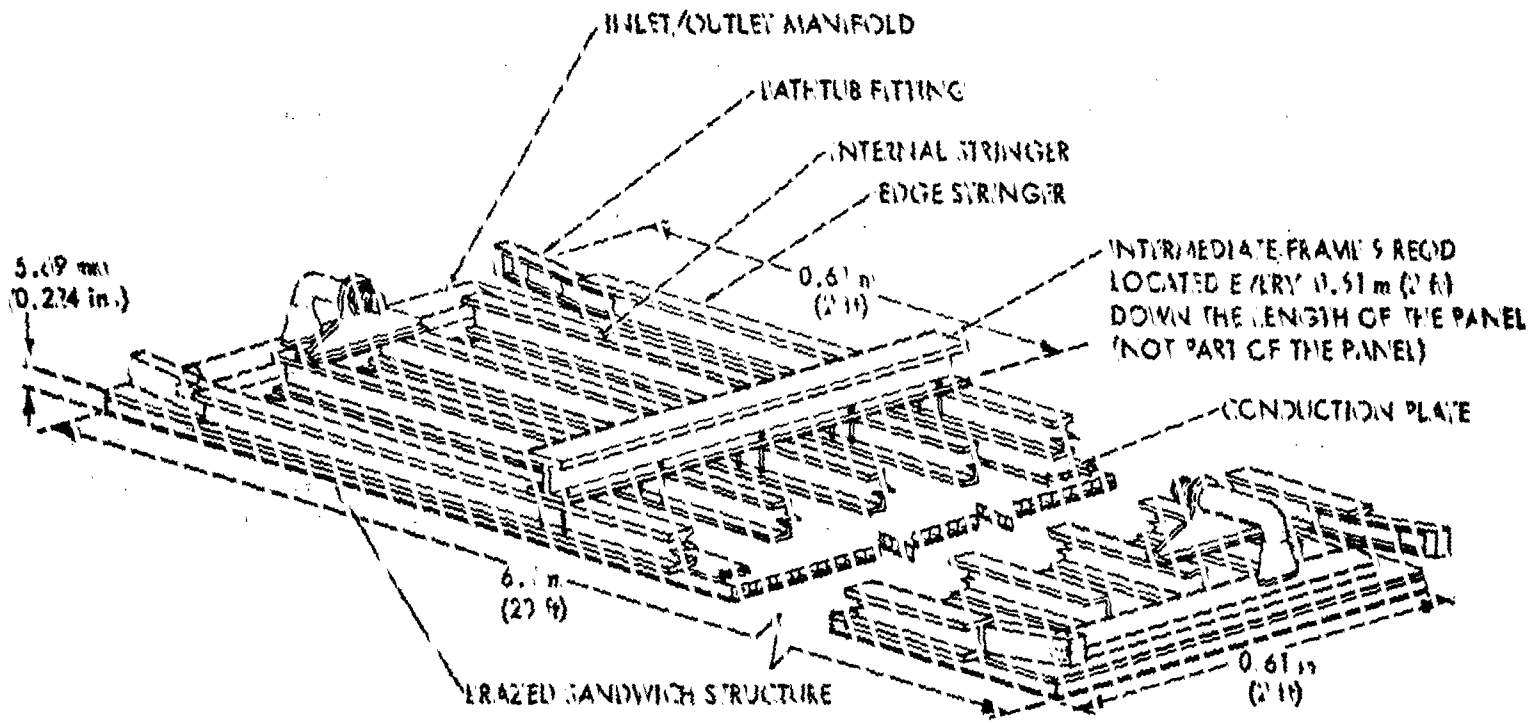

Figure 5

CORE CONFIGURATIONS

(Figure 6)

Two core configurations were provided by NASA for evaluation during the initial phase of the panel design phase. These cores, shown in Figure 6, are termed "lanced offset" and "straight" core. The "straight" core was selected for the actively cooled panel design for the following reasons:

1. The straight core exhibited superior fatigue life in the small scale specimen tests conducted by NASA.

2. The lanced offset core forming process produces very sharp edges between sheared surfaces which could act as local discontinuities and produce stress concentration points.

3. The lanced offset core, by virtue of its multitude of edges, would significantly increase the system drop and produce a corresponding increase in Auxiliary Power System (APS) mass penalty.

CORE CONFIGURATIONS

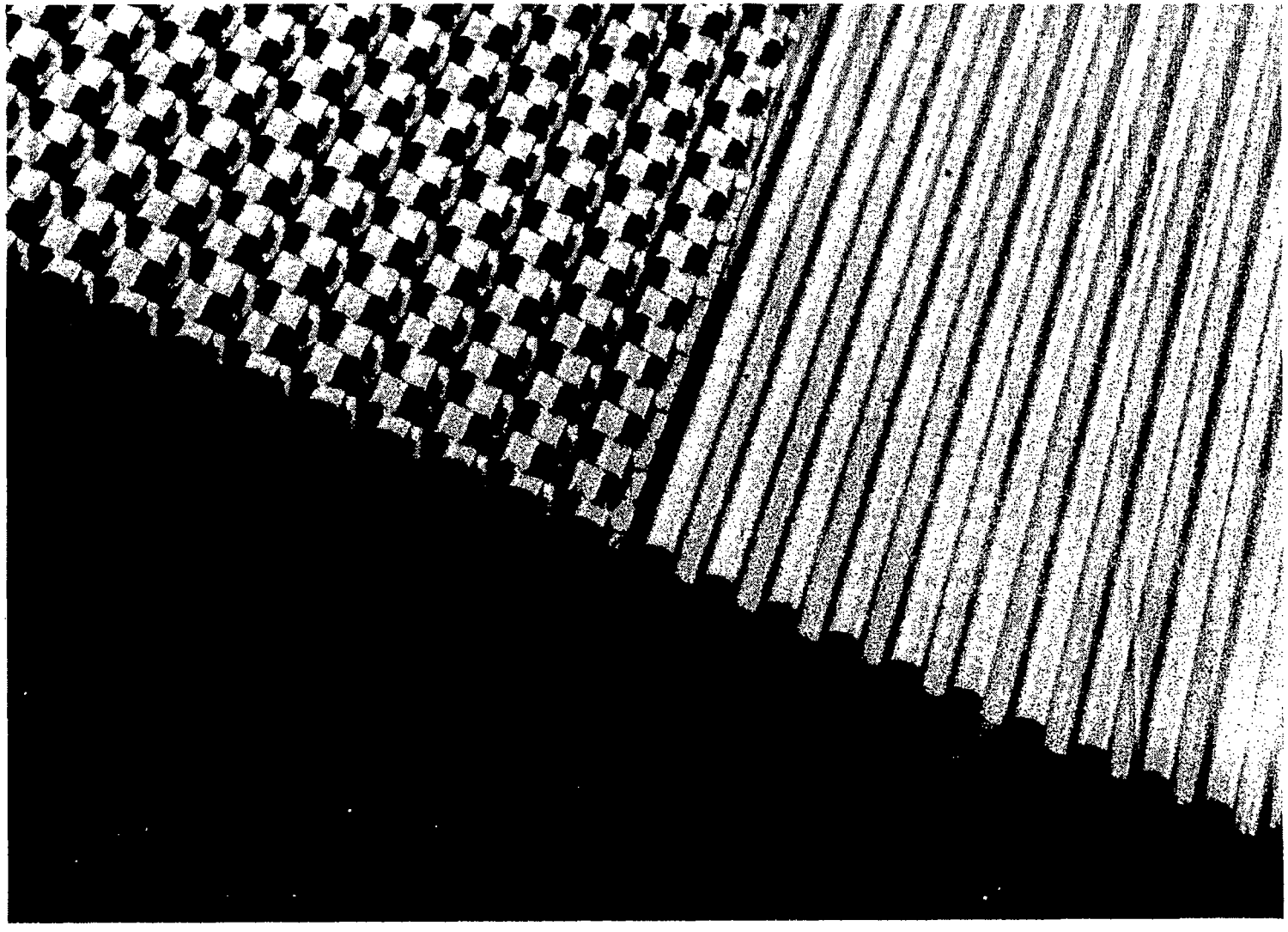

Figure 6

PLATE-FIN BRAZED SANDWICH DETAILS

(Figure 7)

The plate fin sandwich structure stack-up is shown in Figure 7. Its major components are the machined manifold bases, conduction plates, interior face sheet, core, core filler bars, end filler plates, edge filler plates, hardspots and an exterior face sheet. These components are brazed together in one operation and subsequently heat treated to the -T6 temper. The fabrication aspects will be discussed in the following presentation (Ref. 2).

The face sheets are 0.81 mm (0.032 in.) thick No. 23F braze sheets which consist of 6951 aluminum alloy clad with 4045 braze alloy.

The hardspots indicated in the figure occur at each intermediate transverse frame/internal stringer intersection. They allow a panel and stringer attachment to the intermediate frame to be made from the panel exterior via two long countersunk bolts. Twenty-seven (27) such attachments are made in the full scale panel design.

The core filler bars are solid 6061 aluminum machined to fit into a coolant passage or channel every 7.62 cm (3.0 in.) across the width of the panel. They provide rigid support and prevent core cavitation or "suck-in" during the brazing cycle.

The other components of the brazed sandwich are discussed in the following charts.

PLATE-FIN BRAZED SANDWICH DETAILS

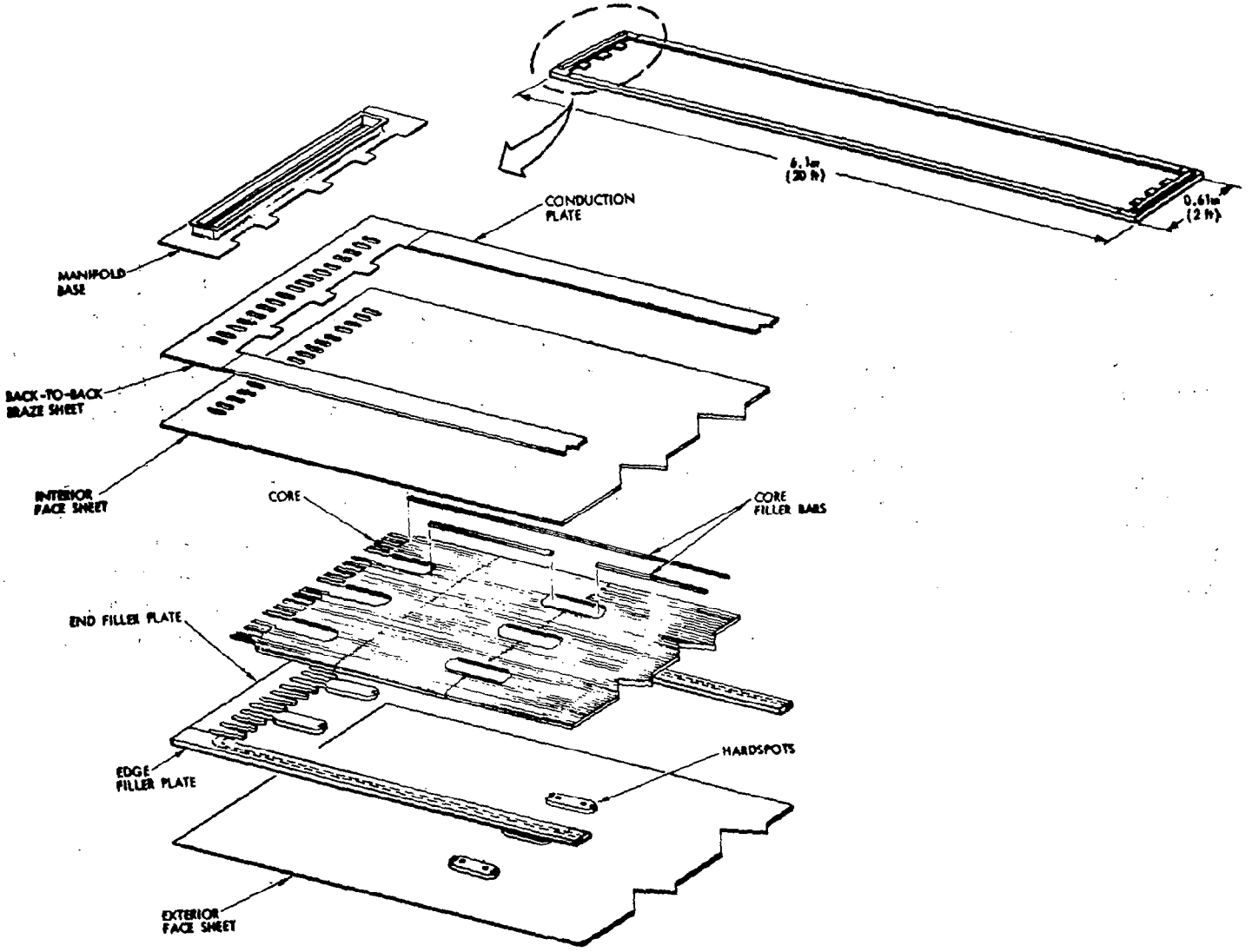

Figure 7

END PANEL DETAILS

(Figure 8)

Figure 8 shows a closeup schematic of the end of the full scale panel. Following sandwich brazing but prior to heat treatment, the manifold dome is welded to the manifold base. Following heat treatment, the three (3) 3.86 cm (1.52 in.) deep channel shaped internal stringers are bonded to the inner face sheet with an epoxy-based, scrim reinforced, high temperature adhesive system. The sandwich structure and stringers are then mechanically attached to the edge stringers and the main frame of the aircraft. The perimeter of the sandwich structure is solid and accepts the attachment fasteners.

The blowup of the panel is presented to show the method of coolant entrance and egress to the core from the manifold. The coolant passes from the manifold thru elongated holes in the inner face sheet, between the fingers or "saw teeth" in the end panel filler plates and into the core. Also shown in phantom is the external coolant channel's exit from the manifold area. The design evolution of this coolant channel is discussed along with Figure 10.

END PANEL DETAILS

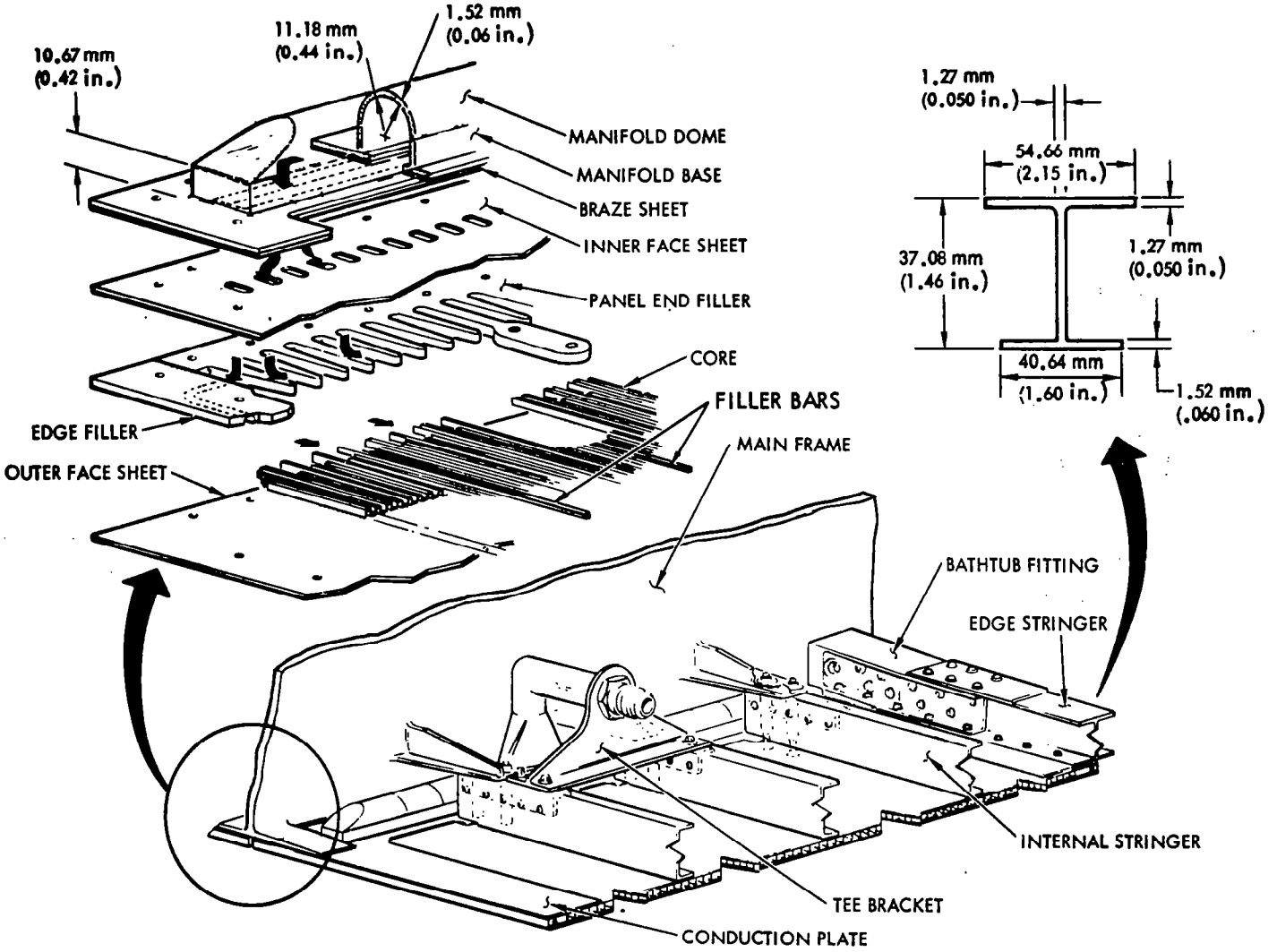

Figure 8

FULL SCALE PANEL MASS BREAKDOWN

(Figure 9)

The panel mass shown in Figure 9 is made up of three (3) elements: the dry structure mass, residual coolant mass and Auxiliary Power System (APS) mass penalty. The dry structure mass of 35.69 kg (87.50 lbm) is dominated by the 0.81 mm (0.032 in.) thick face sheets. They represent 46% of this mass. Hence, the only reasonable approach to reducing dry structure mass is by a face sheet thickness reduction. The face sheet thickness is dictated by not only compressive stability requirements, but also by internal system pressure. Structural analysis dictates a thickness of approximately 0.61 mm (0.024 in.) and the next standard size braze sheet is 0.81 mm (0.032 in.) thick. However, for actual applications, it might be economically attractive to consider chem-milling the material to an optimum thickness, which would result in a total panel mass reduction of approximately 9%.

The residual coolant mass is that fluid mass contained in the panel from the manifold inlet fitting to the outlet fitting and is based on the density of a 60/40 percent ethylene glycol/water mixture at 311 K (100°F).

The Auxiliary Power System (APS) mass penalty is a function of system flow rate ($\dot{\omega}$), pressure drop (ΔP), flight time (θ), coolant density (ρ) and an APS mass penalty conversion factor (G).

$$APS = \frac{G \dot{\omega} \Delta P \theta}{\rho}$$

FULL SCALE PANEL MASS BREAKDOWN

COMPONENT	MASS kg	UNIT MASS	
		kg/m^2	lb_m/ft^2
DRY STRUCTURE			
BRAZED SANDWICH	(24.32)	(6.54)	1.34
FACE SHEETS	16.25		
CORE	2.31		
HARDSPOTS	0.24		
FILLER BARS	0.61		
EDGE FILLER PLATES	1.99		
END FILLER PLATES	0.33		
MANIFOLD BASES	0.42		
CONDUCTION PLATES	2.17		
MANIFOLD TOP	(0.63)	(0.17)	0.03
DOMES	0.17		
TRANSITIONS	0.03		
END FITTINGS	0.20		
BRACKETS	0.23		
INTERNAL STIFFENING	(5.08)	(1.37)	0.28
STRINGERS	4.16		
BRACKETS	0.6		
SHIMS	0.02		
ADHESIVE	0.3		
EDGE STIFFENING	(3.36)	(0.90)	0.18
STRINGERS	2.86		
BATHTUB FITTINGS	0.5		
ATTACHMENT HARDWARE	(2.3)	(0.62)	0.13
DRY STRUCTURE TOTAL	35.69	9.60	1.96
RESIDUAL COOLANT	8.27	2.22	0.45
* AUXILLARY POWER SYS PENALTY	1.99	0.54	0.11
TOTAL PANEL MASS	45.95	12.36	2.52

Figure 9

PANEL EDGE DESIGN

(Figure 10)

The attachment of the panel to the edge stringer requires that solid aluminum be placed between the face sheets in place of the core for mechanical fastener installation. As indicated in Figure 10, the initial design incorporated a 19.10 mm (0.75 in.) wide strip at the edge of the panel. Thermal analysis results indicated a peak temperature in excess of the 394 K (250°F) allowable for this area. A conduction plate which would draw heat from the edge strip and feed it via convection to the coolant was added to the design. The thermal analysis was rerun and although an improvement in peak temperature was predicted, the allowable was still exceeded. A coolant loop external to the fastener line was added to the design and a peak temperature of 388 K (235°F) was predicted at the fastener line near the outlet end of the panel adjacent to the core termination. This configuration was adopted for the full scale design.

THERMAL ANALYSIS INFLUENCE

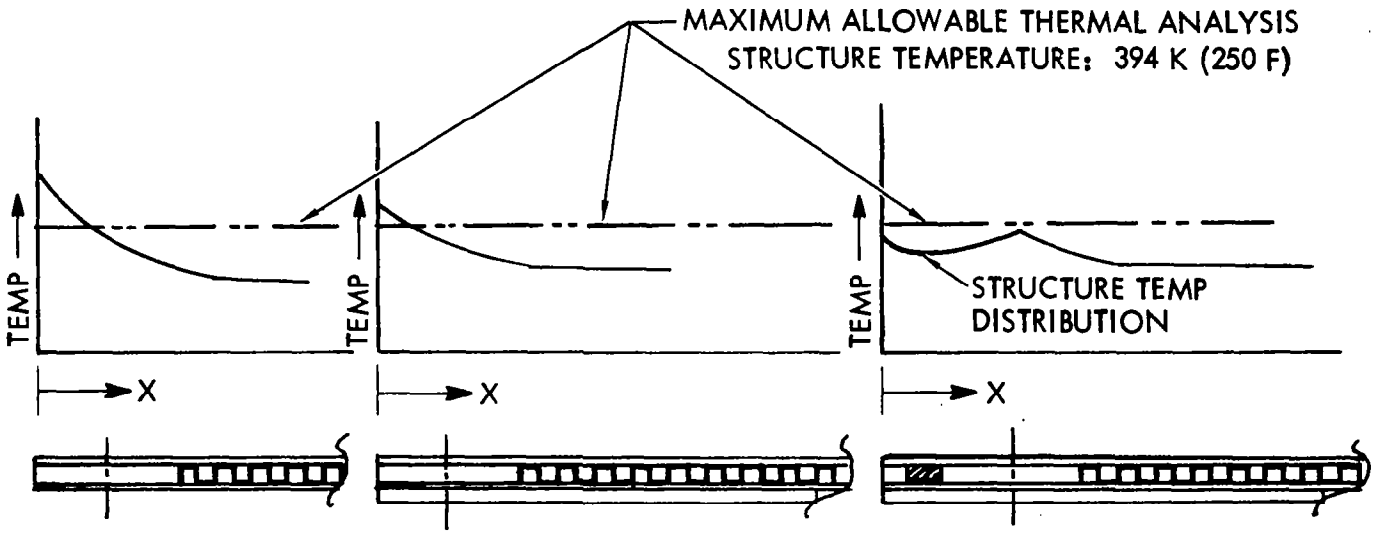

- BASIC EDGE

- BASIC EDGE +
- CONDUCTION PLATE

- BASIC EDGE +
- CONDUCTION PLATE +
- EXTERNAL COOLANT PASSAGE

Figure 10

PANEL EDGE & CORE AREA TEMPERATURE DISTRIBUTION

(Figure 11)

Figure 11 plots the panel predicted temperature distribution for the indicated coolant inlet conditions of 13,608 kg/hr (30,000 lbm/hr) flow rate and 289 K (60°F) inlet temperature. This set of inlet conditions was selected for the final design based on results of a computerized parametric thermal and fluid flow analysis that varied coolant flow rate between 9,078 kg/hr (20,000 lbm/hr) and 18,156 kg/hr (40,000 lb/hr) and coolant inlet temperature between 278 K (40°F) and 311 K (100°F). The selected inlet conditions resulted in the best combination of maximum coolant temperature, maximum structure temperature and pressure drop.

The temperature plots coded 1, 2, 3, 5, 6 and 9 represent structure temperatures and the remainder represent coolant temperatures. The knee-in curves 5, 6 and 9 occur due to a change in the coolant flow regime from laminar flow to transitional flow and a corresponding significant increase in the value of coolant film conductance.

It should be noted that the thermal model and the resulting temperature predictions do not take into account localized end panel effects. This area was analyzed separately and a peak temperature of 414 K (286°F) was predicted for the corner of the panel at the outlet end.

PANEL EDGE AND CORE AREA TEMPERATURE DISTRIBUTION

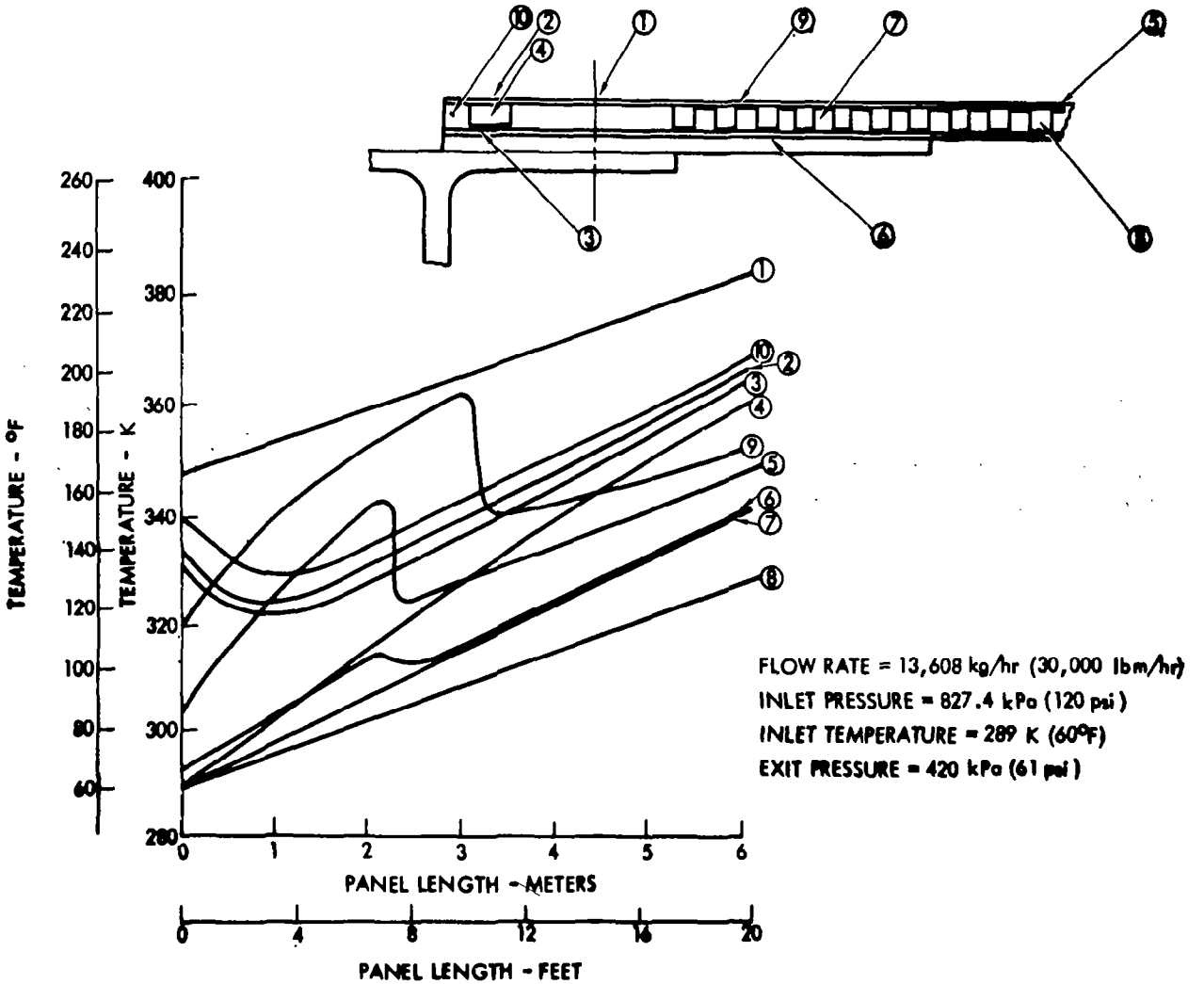

Figure 11

FULL SCALE PANEL PERFORMANCE SUMMARY

(Figure 12)

This chart tabulates the predicted performance characteristics for a full scale stringer stiffened plate-fin sandwich actively cooled panel under the influence of a hypersonic aircraft mechanical and thermal environment for the coolant inlet conditions indicated. The system pressure drop of 827.4 kPa - 362.7 kPa (120 -52.6 psi) or 464.7 kPa (67.4 psi) includes the pressure drop along the core plus the entrance/exit effects in the manifolds.

FULL SCALE PANEL PERFORMANCE CHARACTERISTICS

● COOLANT INLET CONDITIONS	
FLOW RATE	13,608 kg/hr (30,000 lbm/hr)
TEMPERATURE	289 K (60°F)
PRESSURE	827.4 kPa (120 psi)
● MAXIMUM TEMPERATURES	
COOLANT	361 K (191°F)
STRUCTURE	414 K (286°F)
● OUTLET PRESSURE	362.7 kPa (52.6 psi)
● MINIMUM STRUCTURAL MARGIN OF SAFETY	.18

Figure 12

FULL SCALE PANEL CRITICAL AREA LOCATIONS

(Figure 13)

Following completion of the full scale panel design, structurally critical areas of the panel were identified. Fatigue specimens of these areas were designed and fabricated for test by NASA.

The skin/interior hardspot area was selected to evaluate the effects of gaps between the core and hardspot and the hardspots sharp terminations on the face sheets. The end panel/internal stringer area was considered critical because the load path from the panel thru the main frame to the abutting panel joggles, and kick loads and local bending exist. The third area simulates the corner of two adjacent panels. This area was considered critical because of (1) complexity of the panel/edge stringer/bathtub fitting attachment to the main transverse frame, (2) load path from panel to panel uncertainty, and (3) the fact that the structural analysis indicates that the corner fasteners are the highest loaded fasteners in the panel.

FULL SCALE PANEL CRITICAL AREAS

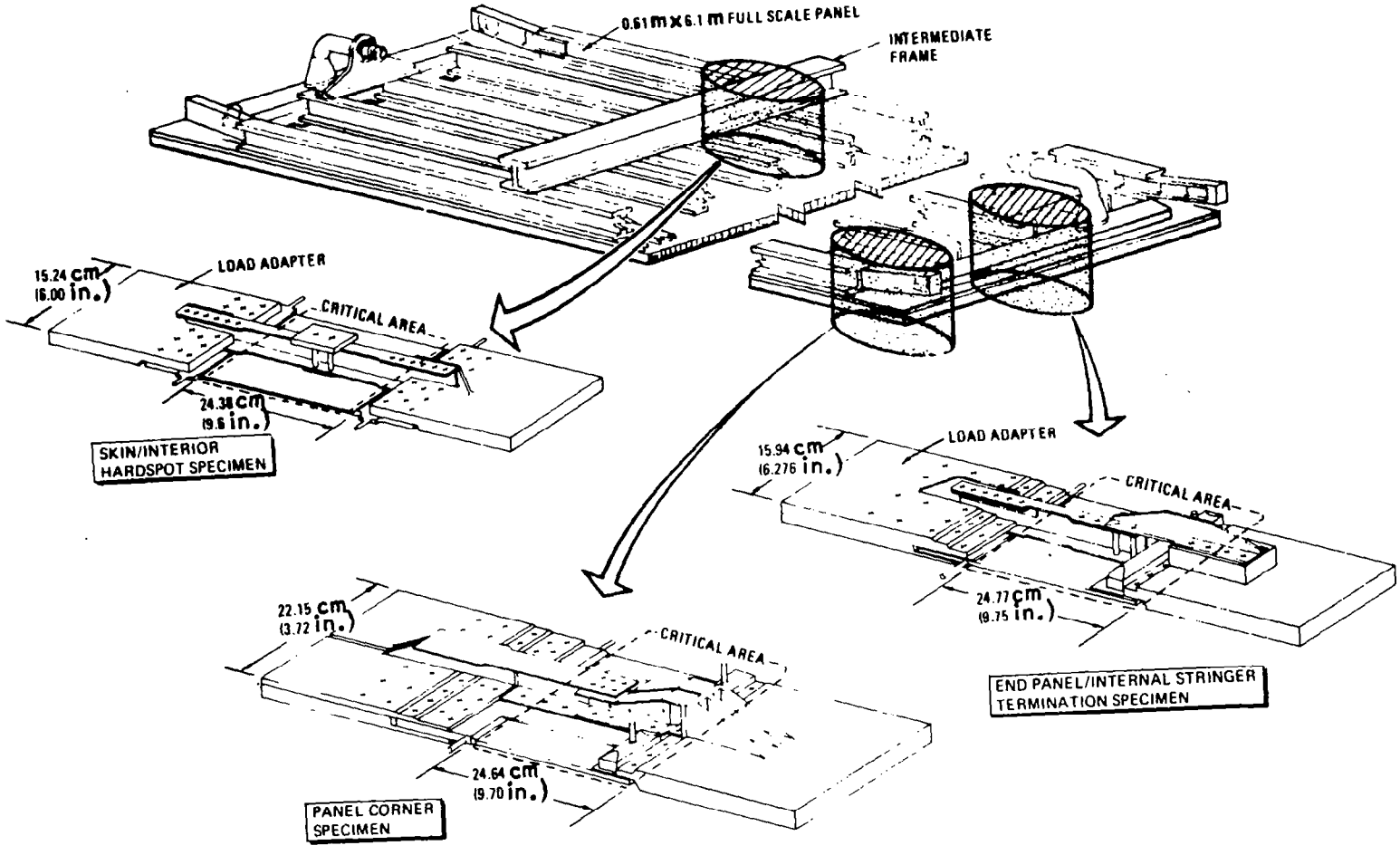

Figure 13

SKIN/INTERIOR HARDSPOT FATIGUE SPECIMEN (SIHS)

(Figure 14)

The photograph shows the inboard side of the SIHS. The overall specimen length including load adapters is 0.67 m (26.25 in.). The specimen is 0.152 m (6.00 in.) wide. It consists of a brazed sandwich (which includes a hardspot,core and closeout strips along the edge), a section of bonded-on internal stringer and a plate which simulates the cap of an intermediate transverse frame. The sandwich and stringer are attached to the cap simulator with 6.39 mm (0.75 in.) in diameter flush head bolts. Spacers are inserted between the inboard and outboard flanges of the internal stringer. The load adapters, as is the case with all test hardware load adapters, are designed to match the neutral axis of the test section across its width to eliminate any test peculiar kick loads. Four (4) machined-in fluid access ports are provided to allow pressurization during test.

SKIN/INTERIOR HARDSPOT FATIGUE SPECIMEN (SIHS

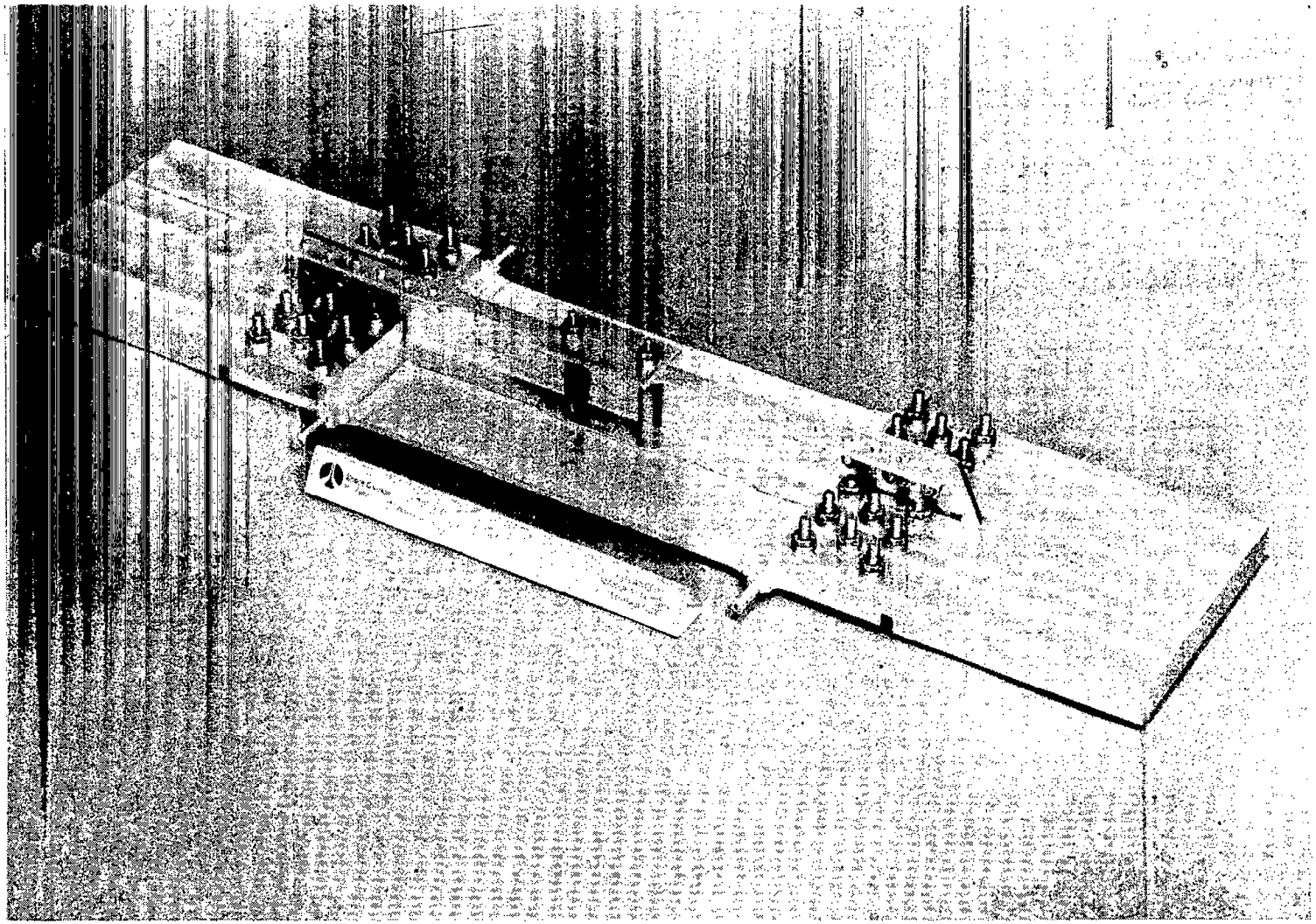

Figure 14

END PANEL/INTERNAL STRINGER TERMINATION FATIGUE SPECIMEN (EPISTS)

(Figure 15)

This photograph shows the inboard side of the EPISTS. The specimen size including load adapters is 0.75 m (29.42 in.) long by 0.25 m (9.75 in.) wide. It consists of a brazed sandwich (which includes a section of end panel filler plate), an internal stringer and its termination attachment hardware and a section of manifold. The test section is mechanically fastened to the load adapter in a manner identical to the full scale panel design attachment to the aircraft main frame.

END PANEL/INTERNAL STRINGER TERMINATION FATIGUE SPECIMEN

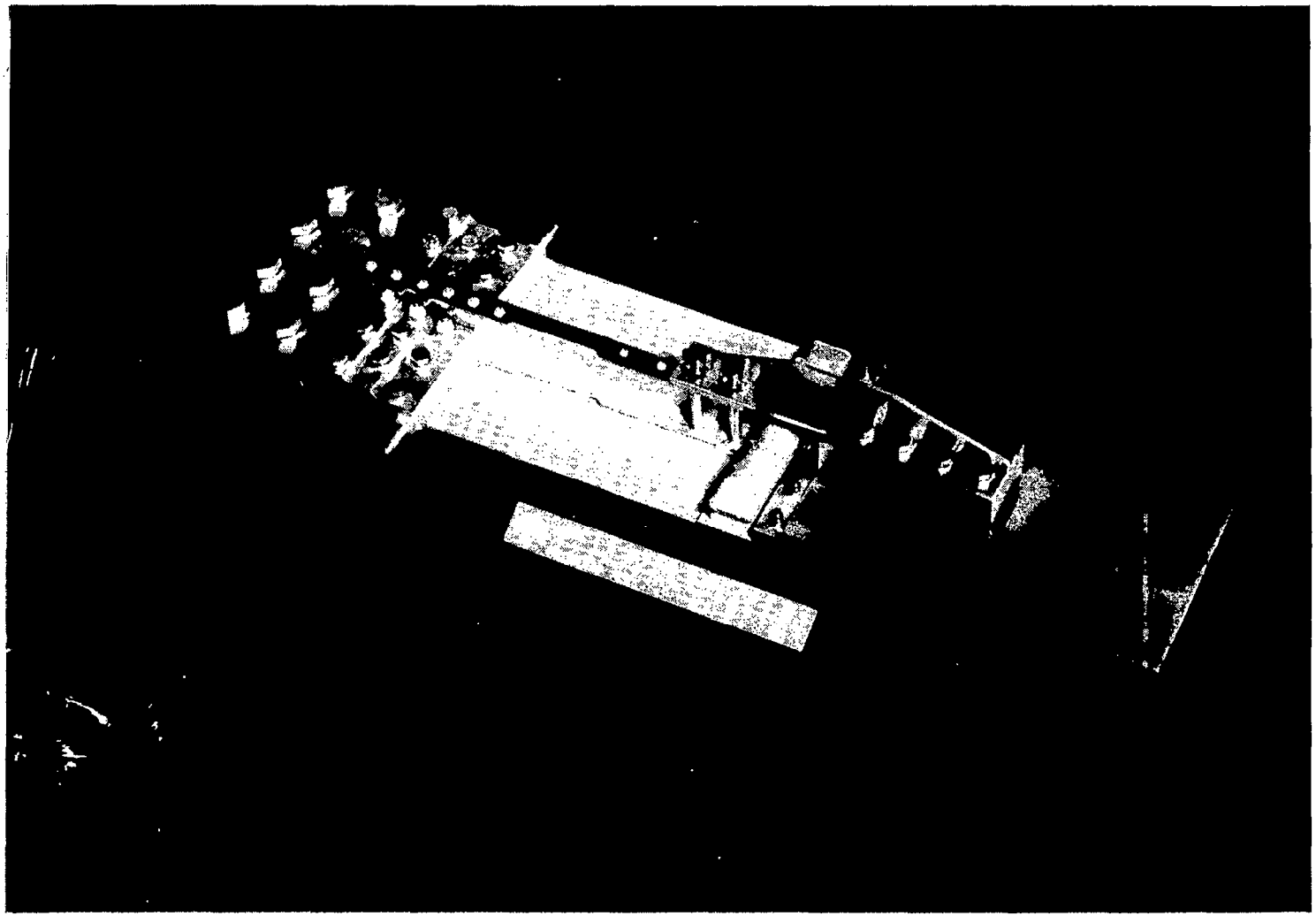

Figure 15

PANEL CORNER FATIGUE SPECIMEN (PCS)

(Figure 16)

This photograph shows the inboard side of the PCS. This specimen represents two (2) adjacent panel corner sections butted to the main frame. The specimen, including load adapters, is 0.77 m (30.55 in.) long and 0.22 m (8.66 in.) wide. It consists of two (2) brazed panel corner sections, two (2) manifold sections, a section of edge stringer and the back-to-back bathtub fittings that interface between the edge stringer and the main frame. The mechanical attachment of the panel and bathtub fittings to the load adapter duplicates the full scale design configuration and hardware.

PANEL CORNER FATIGUE SPECIMEN (PCS)

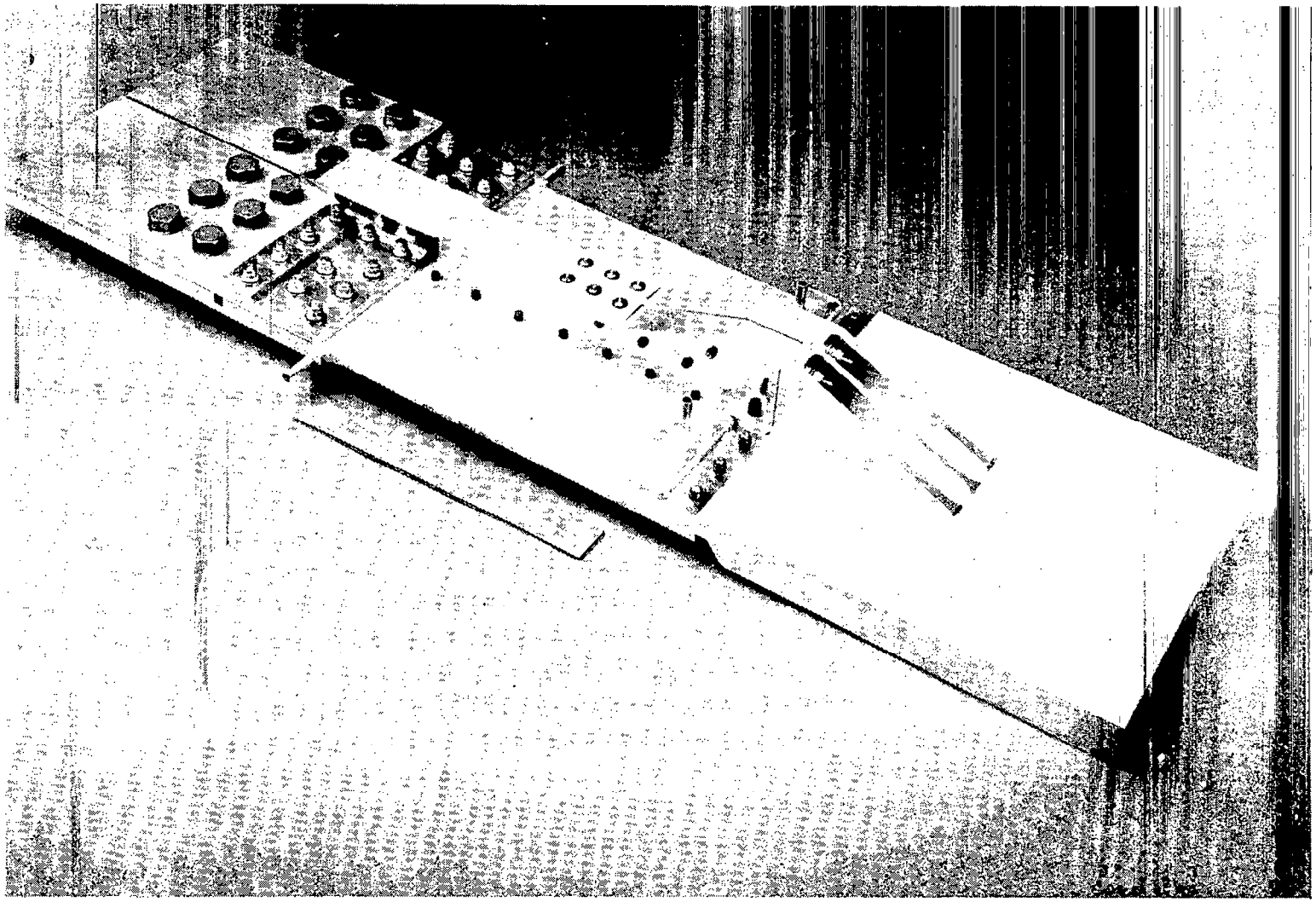

Figure 16

FATIGUE TEST PROGRAM SUMMARY

(Figure 17)

This chart summarizes the fatigue test program results. The specimens were tested by NASA at room temperature to fully reversed (R = -1) tension/compression load levels that had been corrected for the lack of an elevated temperature environment. The percentage of the design limit load of ± 210.15 KN/m (± 1,200 lbf/in.) that was allocated to each specimen based on its cross-sectional area was increased by 21.75% to compensate for the room temperature test environment. The events coded (X) are described below.

(A) The Skin/Interior Hardspot Specimen successfully completed the 20,000 cycle fatigue test.

(B) The End Panel/Internal Stringer Specimen successfully completed 20,000 cycles without failure; however, some joint motion was observed.

(C) The Bathtub Fitting inboard flange in the panel corner Specimen fractured after 3,000 cycles of test. In addition, excessive panel to load adapter joint motion was noted. The specimen was reworked incorporating a redesign bathtub fitting.

(D) The inboard flange of the edge stringer fractured after 3,300 cycles of test. Again, excessive motion at the panel/load adapter riveted joint was noted.

(E) A Boilerplate Panel Corner Fatigue Specimen was designed and fabricated, incorporating a new Taper-Loc Fastener system and a localized beef-up to the edge stringer inboard flange. This specimen successfully completed 20,000 cycles. No joint motion was observed.

(F) The End Panel/Internal Stringer Specimen was reworked to incorporate the Taper-Loc fasteners. Three thousand (3,000) additional cycles were run. No joint motion was observed.

FATIGUE TEST PROGRAM SUMMARY

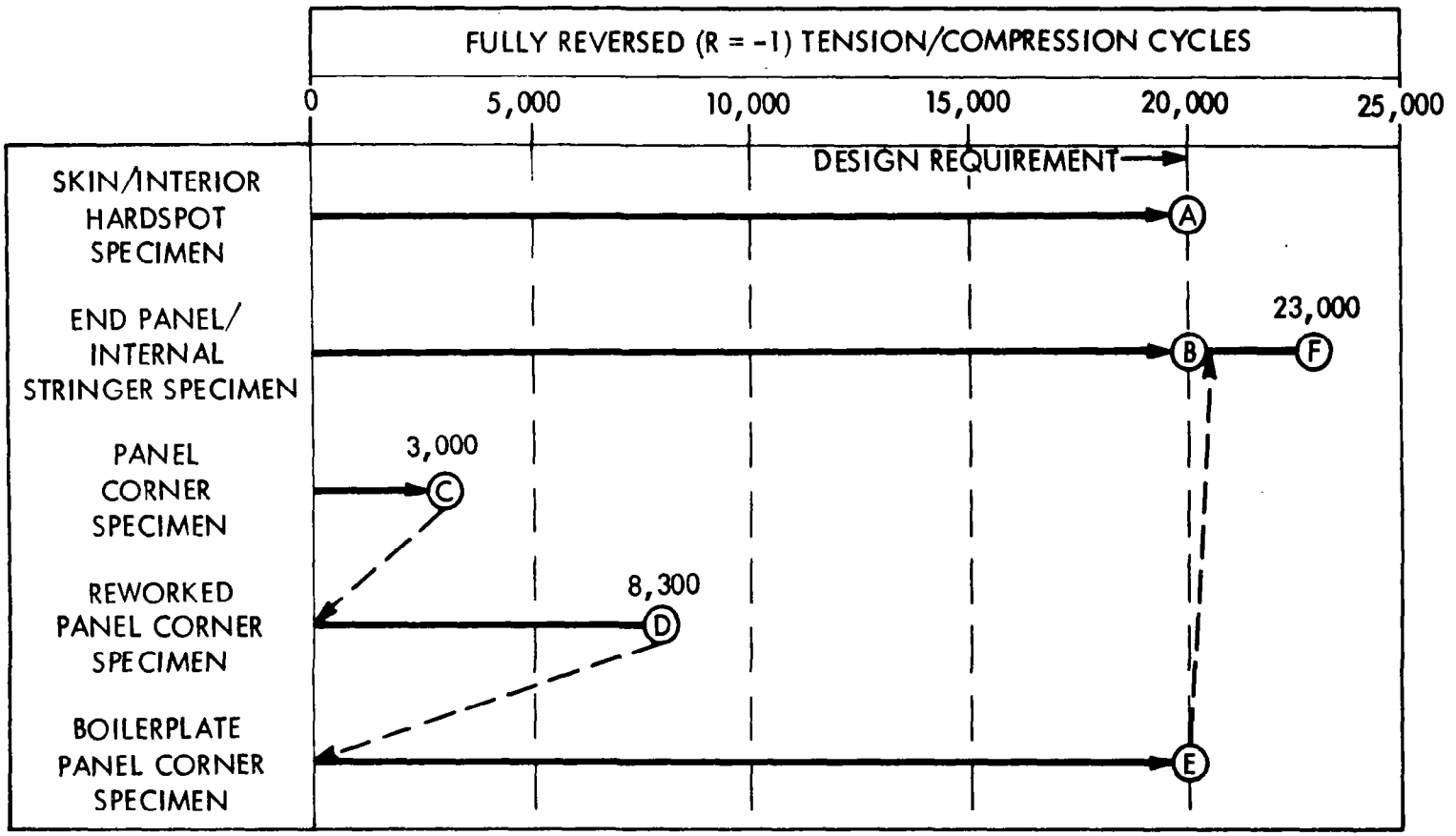

Figure 17

BATHTUB FITTING REDESIGN

(Figure 18)

The configuration of the initial Bathtub Fitting and the redesign are shown on this chart, along with a photograph of the reworked panel corner specimen. The joggle was essentially eliminated and the flanges thicknesses of the fitting increased.

BATHTUB FITTING REDESIGN

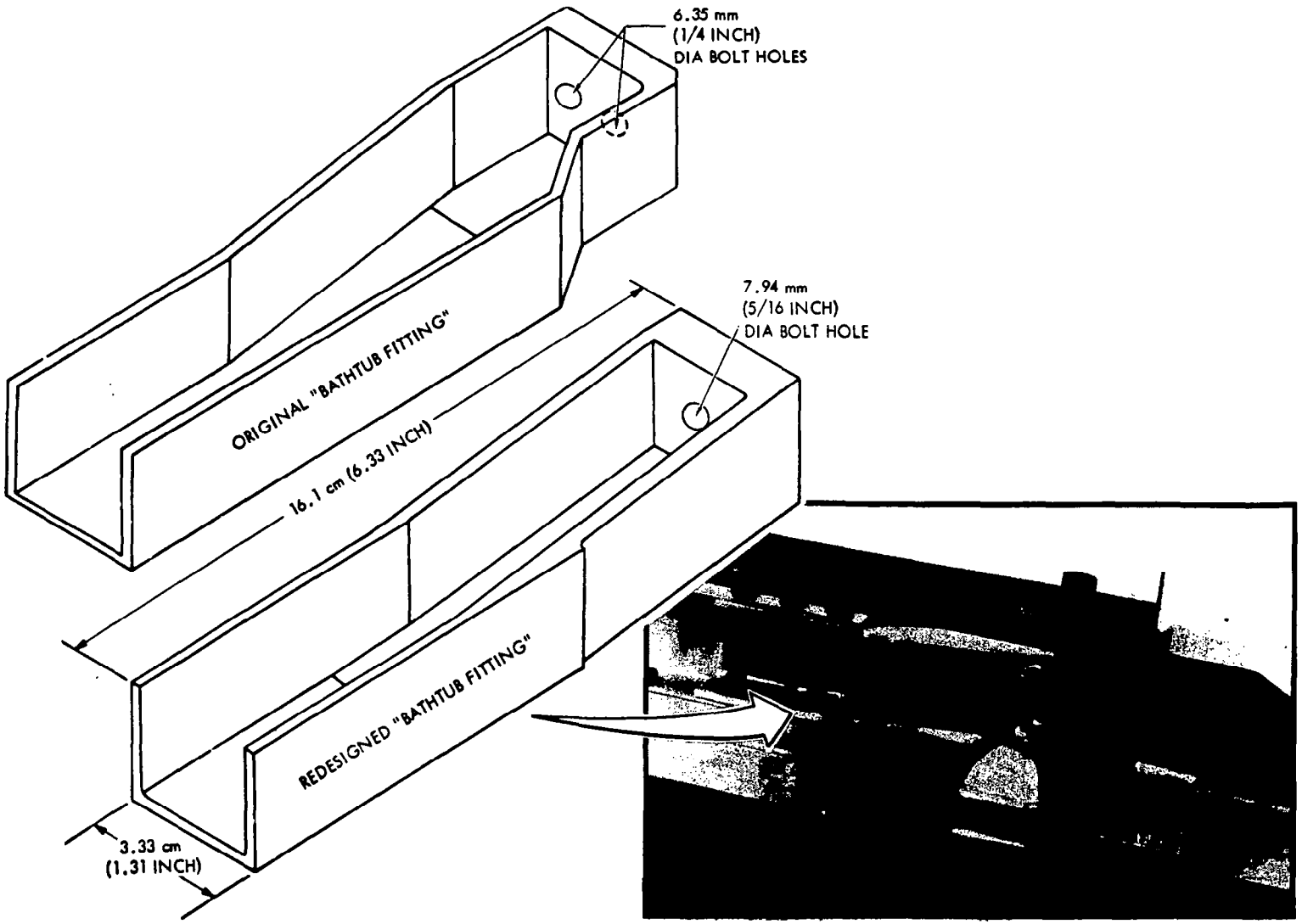

Figure 18

JOINT SPECIMEN TEST SETUP

(Figure 19)

Following the second failure of the panel corner specimen, it became increasingly evident that the brazed panel to main frame (or load adapter) joint was not rigid enough to transfer its share of the axial load. As a result, the percentage of load carried through the Bathtub Fitting Flange to the inboard flange of the edge stringer was in excess of its capability. The fastener used at the panel/load adapter interface was a blind flush head pull rivet.

A test program was initiated to evaluate a series of different types of fasteners. A series of specimens that duplicate this joint in material and thickness were fabricated and assembled with the original rivets, shear bolts, tension bolts, Jo-Bolts and Taper-Loc Bolts. Hole preparation consisted of standard structural clearances and interference fits. A total of twelve (12) specimens were tested. Testing was performed with an MTS Inc. electrohydraulic test machine. Each specimen was gripped with Amsler rigid-wedge grips capable of applying tension/compression loads to the test specimen with zero backlash when going through zero load. The specimen and test setup are shown in Figure 19.

JOINT SPECIMEN TEST SETUP

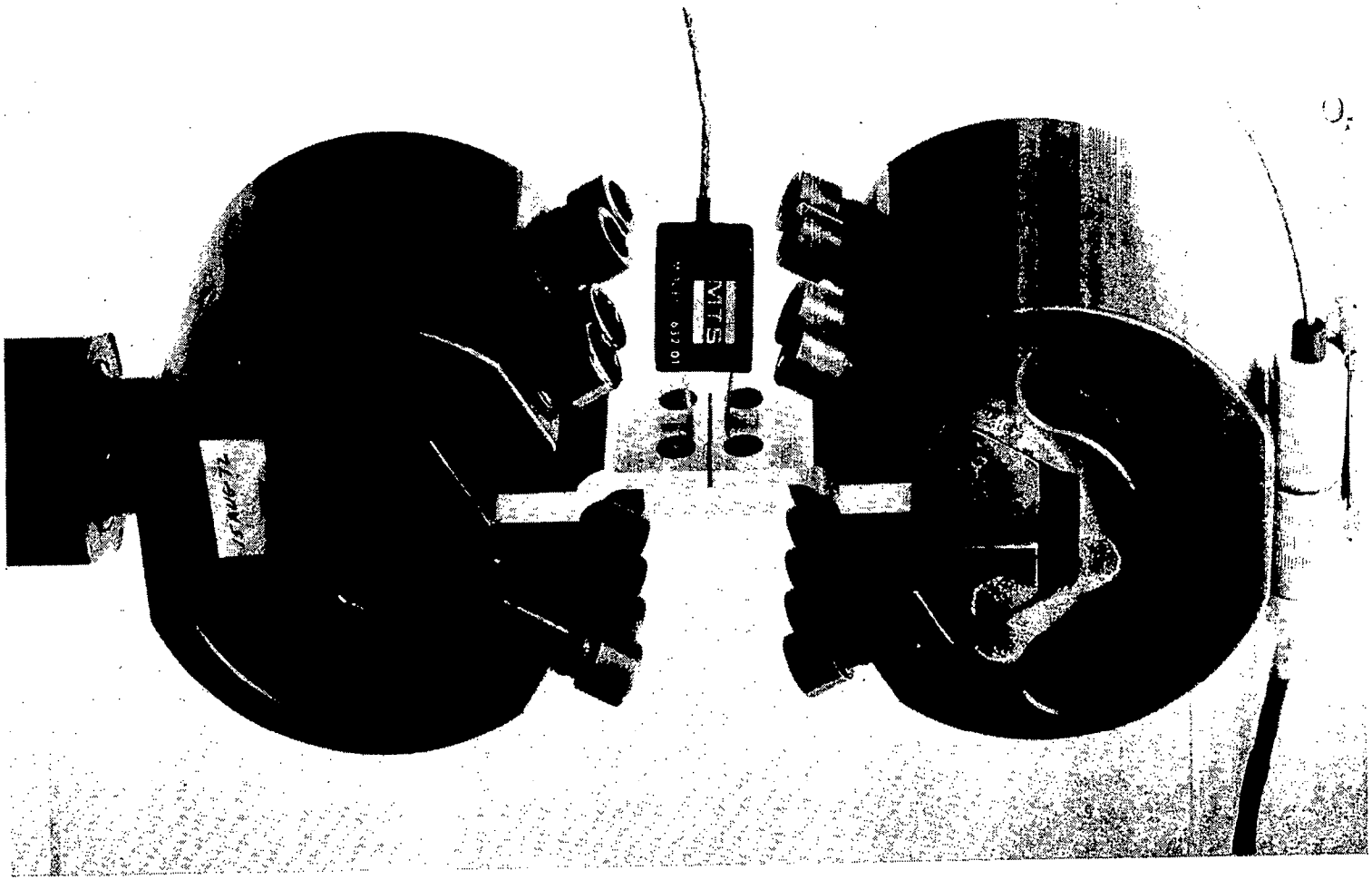

Figure 19

JOINT TEST SPECIMEN RESULTS COMPARISON

(Figure 20)

This chart compares the results obtained for the original blind flush head rivet and the Taper-Loc fastener. The Taper-Loc was superior to all fasteners tested. Joint motion was reduced approximately 82% with this new fastener and it was incorporated into the full scale design and was used on all future test hardware.

JOINT TEST SPECIMEN RESULTS COMPARISON

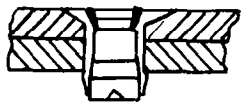

BLIND RIVET

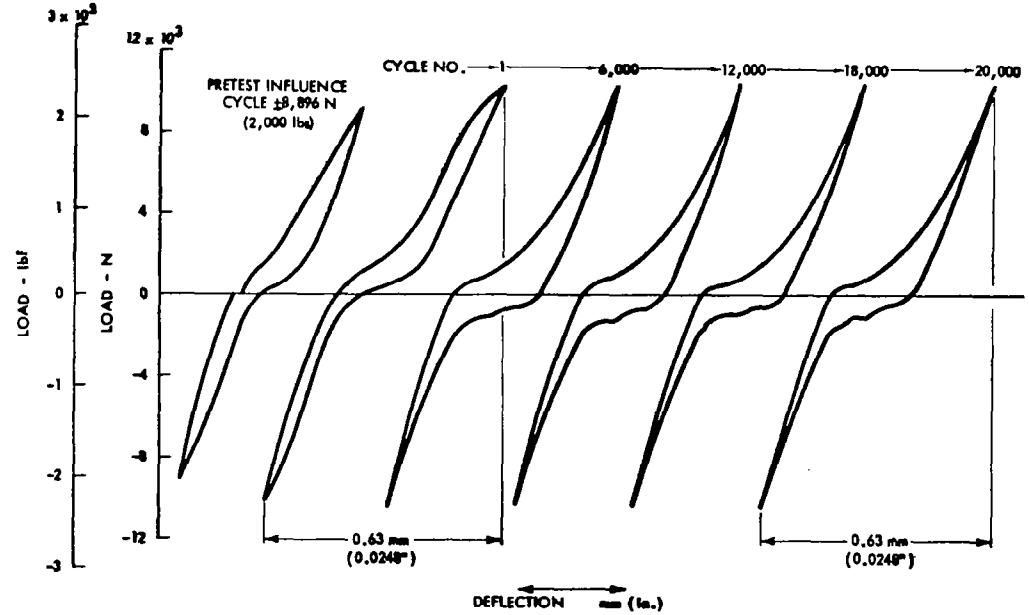

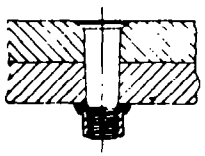

TAPER LOC FASTENER

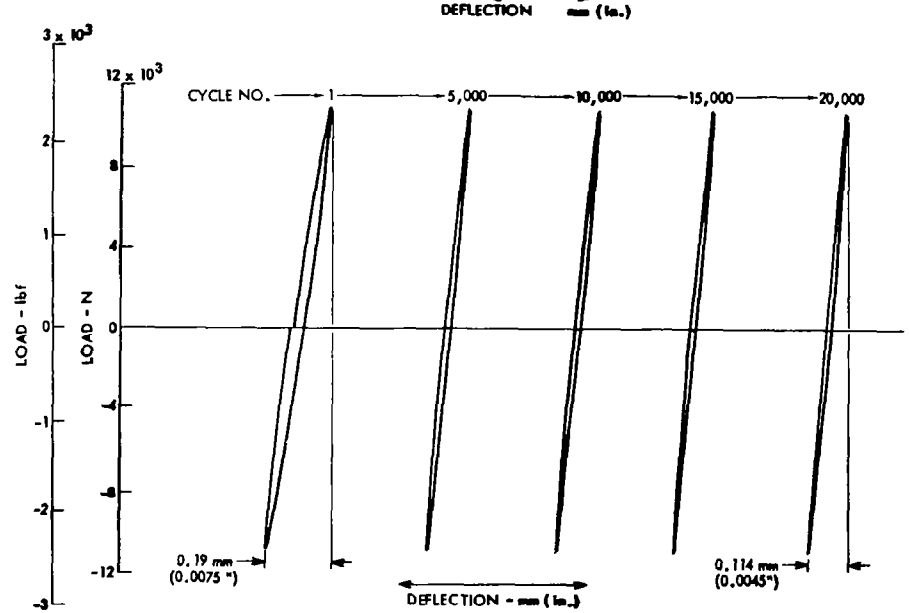

Figure 20

BOILERPLATE FATIGUE SPECIMEN

(Figure 21)

This photograph shows the Boilerplate Panel Corner Fatigue Specimen. The grooved plates replace the brazed sandwich structures but retained the same bending stiffness. This specimen also shows the nut side of the Taper-Loc fasteners used as replacements for the blind rivets. This specimen was successfully tested to 20,000 cycles without failure or evidence of joint motion.

BOILERPLATE FATIGUE SPECIMEN

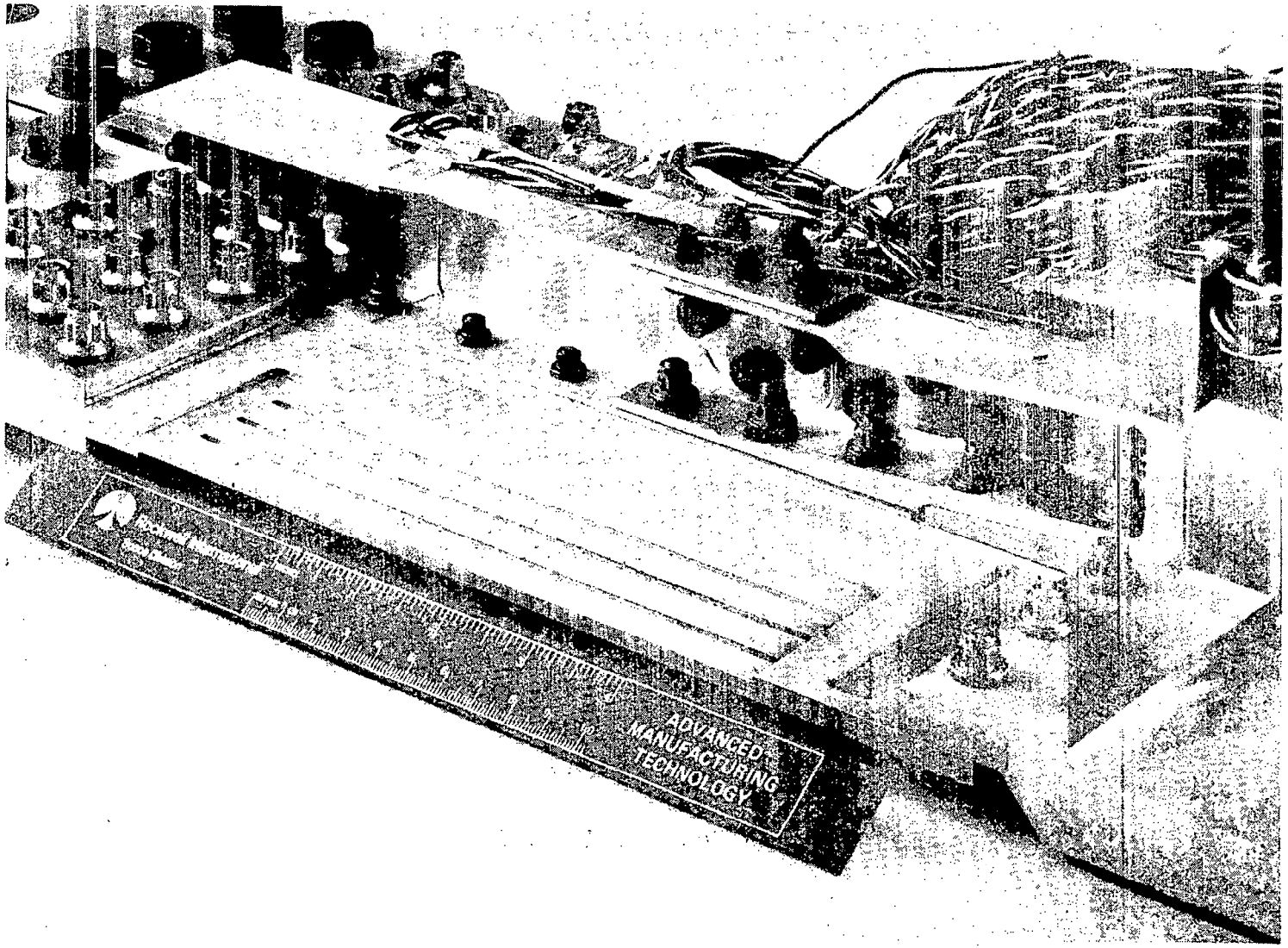

Figure 21

TEST PANEL SCHEMATIC

(Figure 22)

Following "successful" completion of the fatigue test program, a test panel was designed, analyzed and fabricated by Rockwell for test by NASA. The test panel is representative of the first 0.61 m (2 ft) and the last 0.61 m (2 ft) of the full scale panel design. The load adapters are designed to simulate the interface configuration and stiffness of an aircraft main frame and to distribute loads from the load grips into the test panel in the same manner as butted panels would on an aircraft. The severe sculpturing of the load adapters accomplishes these design objectives.

TEST PANEL SCHEMATIC

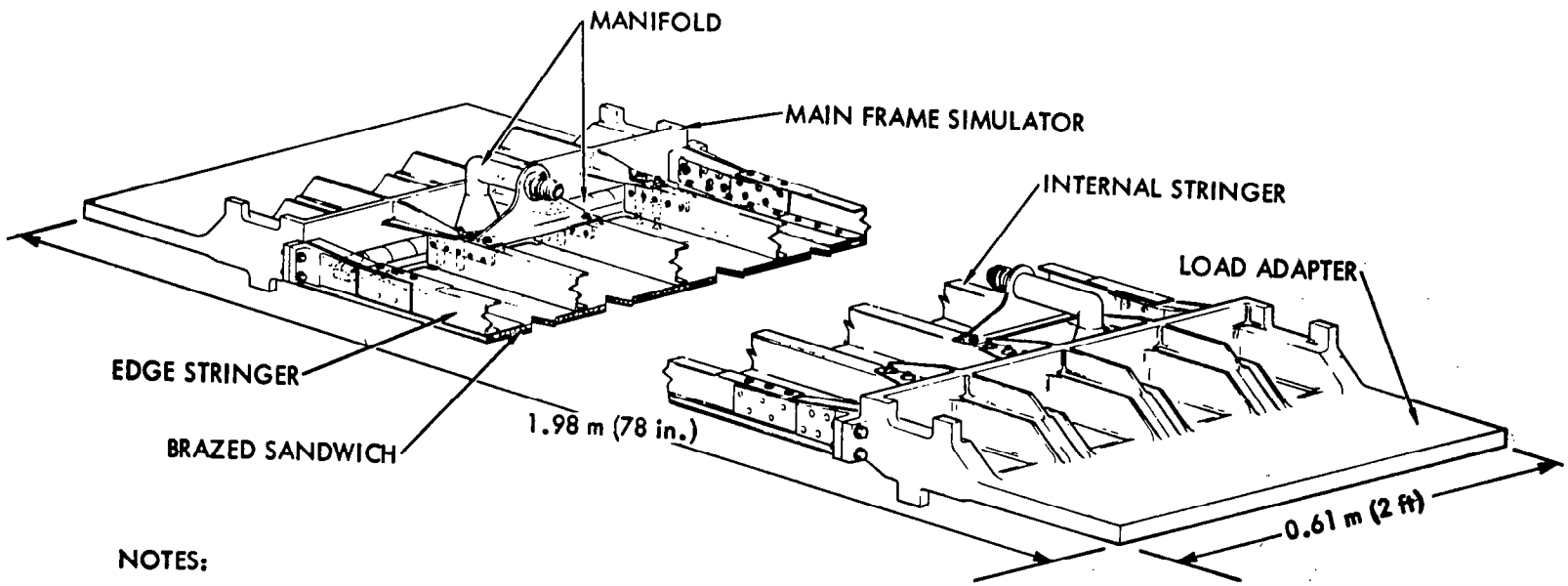

NOTES:

(1) INTERMEDIATE TRANSVERSE FRAME NOT SHOWN

(2) HEAT STRIPS ON REVERSE SIDE OF LOAD ADAPTERS

Figure 22

TEST PANEL/LOAD ADAPTER INTERFACE OPTIONS

(Figure 23)

The full scale panel design assumes that butting panels would be installed on the aircraft structure, inlet butted to inlet and outlet to outlet. Hence, in order to simulate a flight environment during test, the heat flux applied to the test panel via a quartz lamp system should not flow, via conduction, to the load adapter and no transverse thermal stress should exist at the test panel/load adapter interface. Three (3) design options, shown in Figure 23, were considered to meet the above requirements.

Option 1 ties the test panel to the load adapter with a series of titanium links. The titanium would minimize heat flow to the load adapter and the links would allow independent transverse panel growth. This option was rejected due to concern over joint stiffness during full tension/compression load cycling.

Option 2 features slotted holes either in the test panel or the load adapter. This option was rejected because of the precision-like hole quality required and the friction restraint provided by joint clamp-up.

Option 3 utilizes a heat strip bonded to load adapter near its interface with the test panel. A control thermocouple is located on the end of the test panel and a drive thermocouple is located in close proximity on the load adapter. As panel temperature increases, the heat strips drive the load adapter at the interface to approximately the same temperature. Hence, heat flow is minimized and both the test panel and the load adapter grow together in the transverse direction so no transverse thermal stress occurs at the interface. The load adapter is insulated to prevent heat loss to the surrounding environment. This option was adopted for the test panel design.

TEST PANEL/LOAD ADAPTER INTERFACE OPTIONS

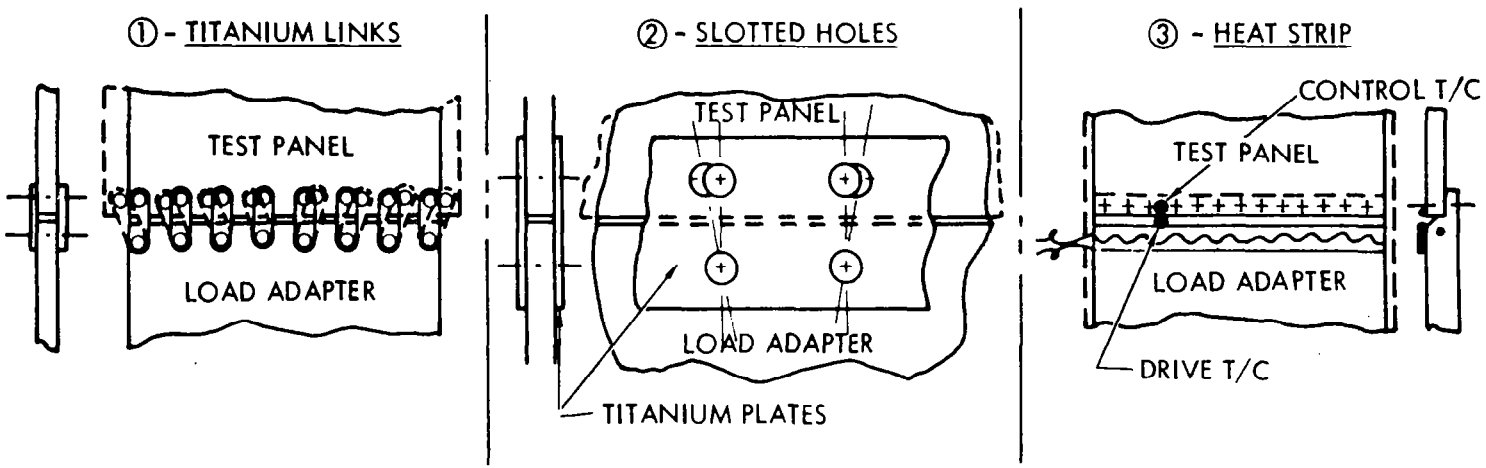

Figure 23

TEST PANEL TEMPERATURE DISTRIBUTION

(Figure 24)

Figure 24 presents a plot of predicted test panel and load adapter temperature distributions that was fed into the NASTRAN structural model. It assumes that the panel is subjected to the design heat flux of 136.2 k W/m^2 (12 $Btu/ft^2.5$) with a coolant inlet condition of 13,608 kg/hr (30,000 lbm/hr) at 289 K (60°F) and that the load adapters track the test panel end temperatures. This data was generated from a review of separate thermal analyses conducted on the load adapters and the test panel. The temperature gradients at the test panel/load adapter interfaces are estimated and may vary significantly during test. In retrospect, it is obvious that the thermal model elements in the vicinity of the panel ends were not sized small enough to allow a good prediction of precise temperatures in the vicinity of the manifolds and end panel filler plates. Yet the gradients as presented are considered to be severe enough to allow a conservative structural analysis to be conducted.

TEST PANEL TEMPERATURE DISTRIBUTIONS

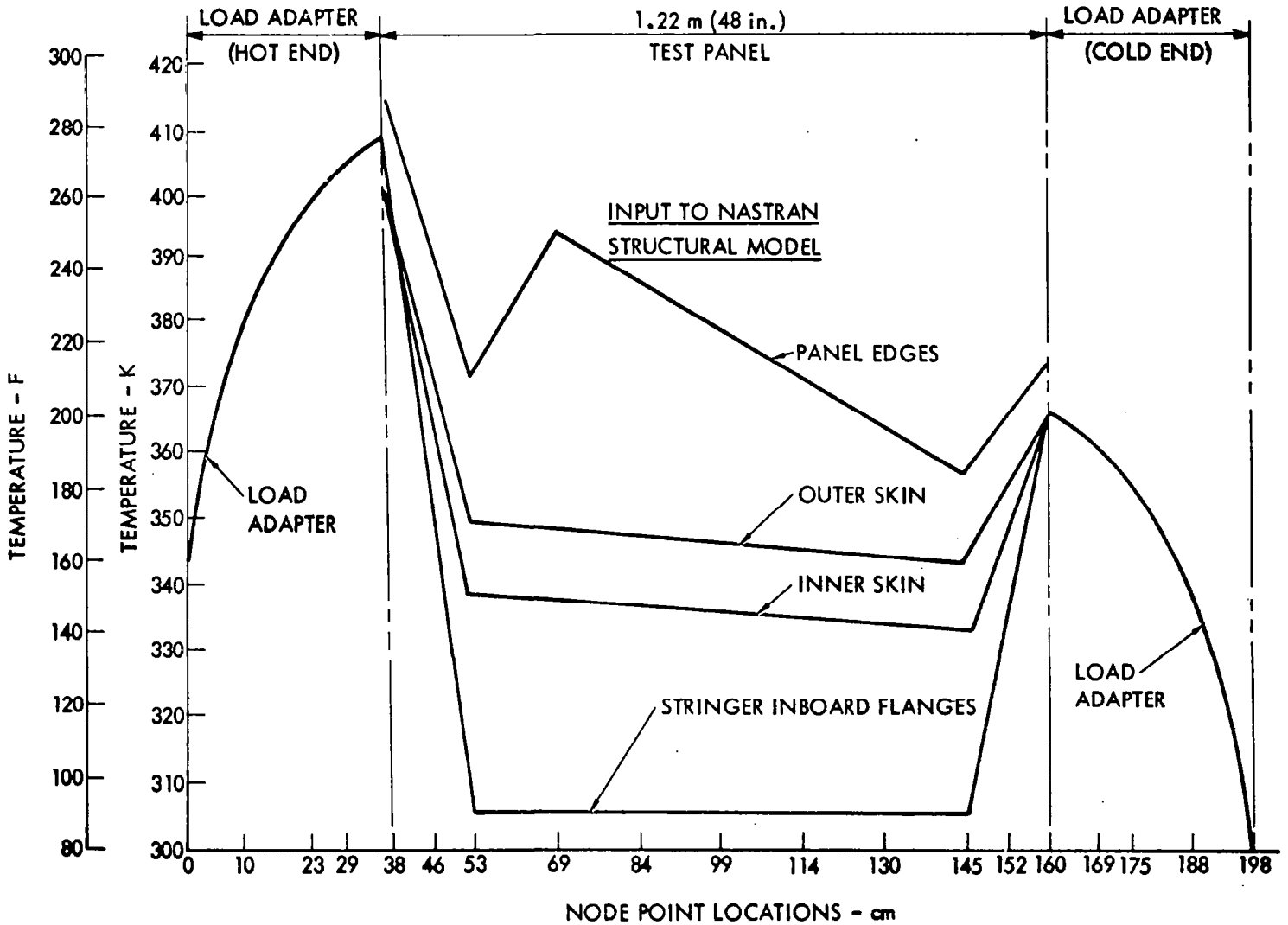

Figure 24

TEST PANEL STRESS DISTRIBUTIONS

(Figure 25)

This figure plots results of a NASTRAN analysis that considered mechanical loads and thermal stresses separately. The brazed sandwich will operate at stress levels essentially identical to those predicted for the outboard flanges of the stringer. A detailed review of this data will result in a calculation of a worst case combined stress level of approximately 110.3 MPa (16,000 psi) compression. This stress level occurs at a point approximately one (1) foot from the outlet end of the panel on the edge stringer outboard flange and the adjacent brazed sandwich structure.

PREDICTED TEST PANEL STRESS DISTRIBUTION

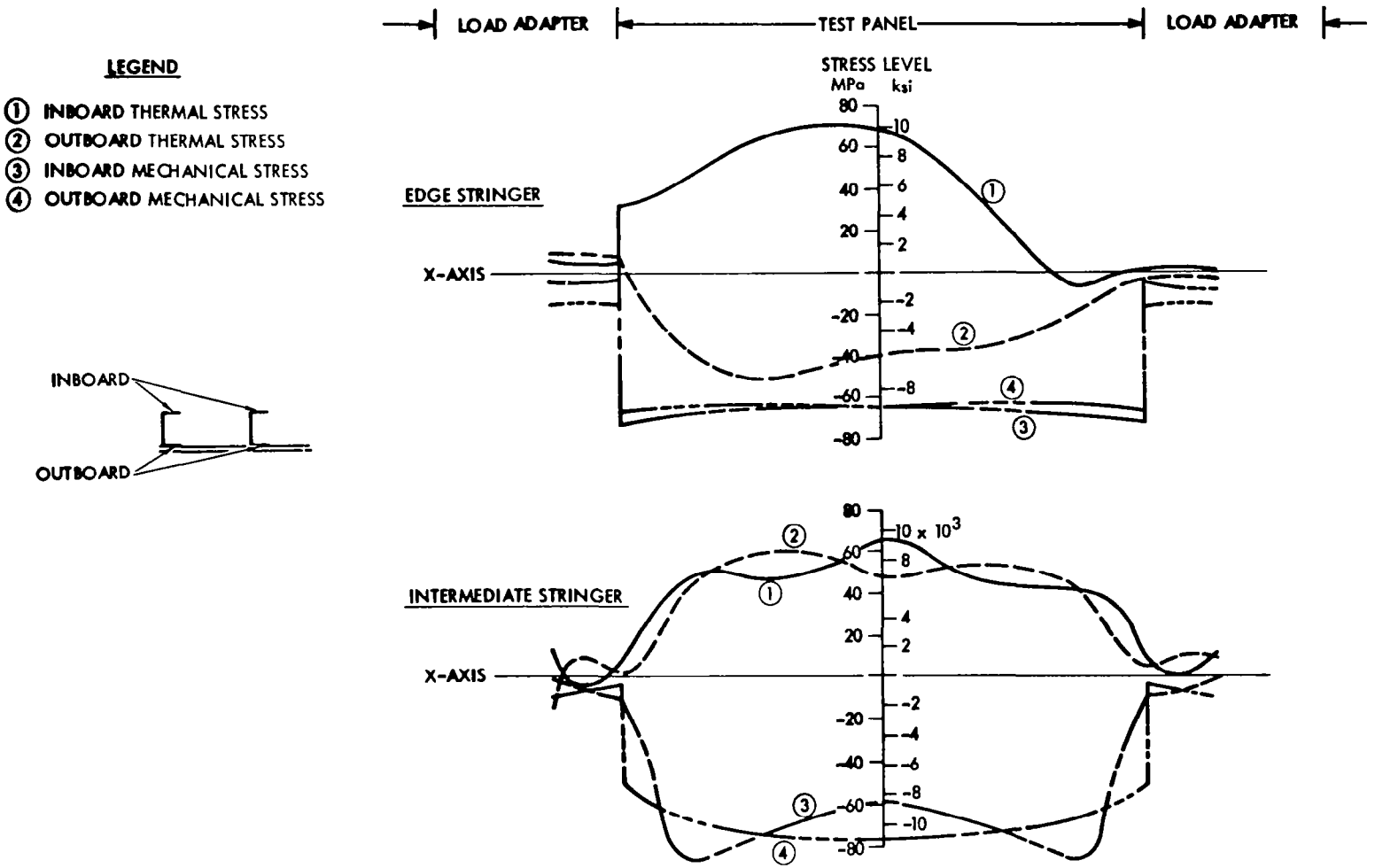

Figure 25

TEST PANEL

(Figure 26)

The photograph of the test panel shows some of the details not previously discussed which are test peculiar. The flight type bathtub fittings are backed up by dummy fittings so the edge stringer is attached in double shear. The test panel edge stringer is a machined channel section whereas the full scale stringer is an I-section that attaches adjacent panels together. The six (6) "pillow blocks" or dual race bearings mechanically fastened to the load adapters and the intermediate transverse frame simulator are part of the NASA test facility. These "pillow blocks" receive a hardened steel bar which is clamped to the test facility and provides lateral stiffness to the panel during test.

TEST PANEL

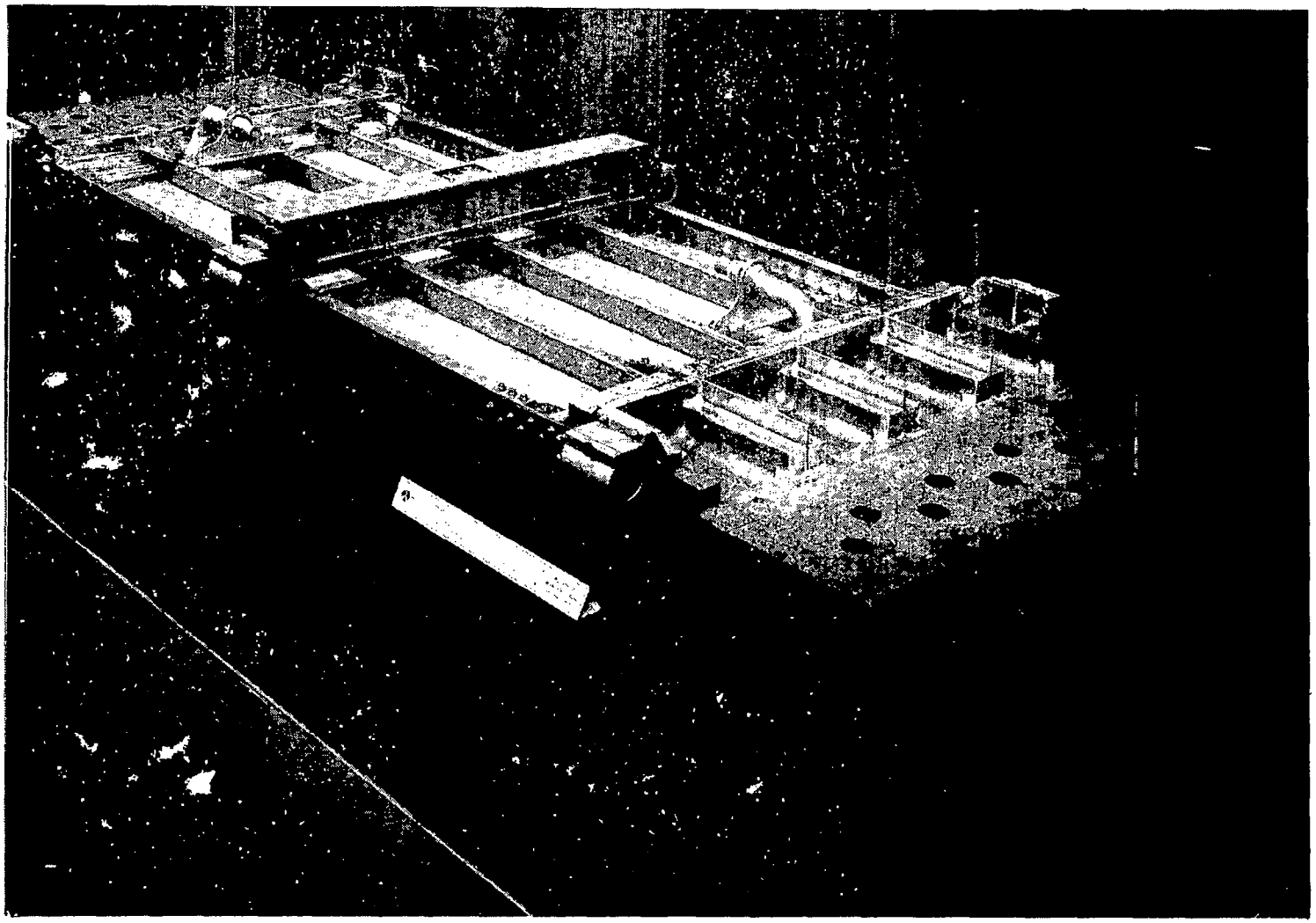

Figure 26

STRINGER STIFFENED PLATE-FIN SANDWICH ACTIVE COOLING CONCEPT STUDY

✓ CONCLUSIONS

- THE CONCEPT IS:
  - FEASIBLE—BASED ON ANALYSIS & LIMITED TESTING
  - VERSATILE—VARIATIONS IN COOLANT INLET CONDITIONS & CORE HEIGHT CAN ACCOMMODATE RANGE OF HEAT FLUX
- PANEL PERIMETER DESIGN FEATURES ARE CRITICAL
  - STRUCTURALLY—FASTENER SELECTION & HOLE PATTERN
  - THERMALLY—SOLID MATERIAL MUST BE MINIMIZED
- TRANSVERSE LOAD REQUIREMENTS (MECHANICAL OR THERMAL) WOULD:
  - REQUIRE CLOSER STRINGER SPACING OR
  - HONEYCOMB STIFFENING IN PLACE OF STRINGERS

  } MASS TRADE
- IF THE LUXURY OF TIME IS AVAILABLE, A PHASED PROGRAM LIKE THIS RESULTS IN MAXIMUM BENEFITS FOR $ SPENT

REFERENCES

1. Smith, L. M.; and Beuyukian, C. S.: Actively Cooled Plate-Fin Sandwich Structural Panels for Hypersonic Aircraft. Final Report, No. SD 78-AP-0074, Rockwell International, Space Systems Group, Aug. 1978.

2. Beuyukian, Charles S.: Fluxless Brazing and Heat Treatment of a Plate-Fin Sandwich Actively Cooled Panel. Recent Advances in Structures for Hypersonic Flight, NASA CP-2065, 1978. (Paper no. 12 of this compilation.)