N83- 15351

CHAPTER 4

NONTERRESTRIAL UTILIZATION OF MATERIALS: AUTOMATED SPACE MANUFACTURING FACILITY

4.1 Introduction

The heavens have always been the subject of intense curiosity and longing, beckoning to our imaginations and, sometimes, to our desires for dominion over that which is not yet under human control. Recent American space exploration efforts represent only tentative steps toward increased human understanding of the Universe -- indeed, lunar and planetary missions often have raised more questions than they have answered. Those in the forefront of space sciences believe that the ultimate horizons are as yet only dimly perceived. A substantial minority of the American public would like to see more effort devoted to deeper investigations of the planets, stars, and galaxies beyond Earth.

However, most people remain unconvinced that expanded activities in space gained apparently at the expense of other societal goals are worth the price (Overholt *et al.*, 1975). Clearly, future large-scale American space projects should embody a fundamentally new perspective – an overall shift from the existing policy of (primarily) exploration to one of integrated and direct utility for mankind. Such a pragmatic space utilization program may demand extensive use of nonterrestrial materials and an ever-increasing dependence on automation in all its dimensions. The Nonterrestrial Utilization of Materials Team has explored the need for such a program, and has laid the foundation for future NASA technology planning by examining in some detail a space project having the potential for physical growth with continually decreasing net materials import from Earth.

4.1.1 Objectives

A principal objective of the present study is to develop scenarios which show how, starting from current plans and capabilities, an extraterrestrial facility providing economic benefits for humanity can be established, maintained, and expanded in the near future. Ultimately, this permanent orbital factory will be dependent in large degree on nonterrestrial materials and autonomous robots programmed for advanced machine intelligence. The principal thrust of chapter 4 is to demonstrate the relationship between nonterrestrial utilization of materials and the growth of an orbital manufacturing facility beginning with a minimal "starting kit" of machines. The kit performs basic manufacturing processes necessary for facility expansion and the creation of a widening spectrum of the means of production.

This goal was chosen because only through the development of extraterrestrial resources can future space activities be pursued independently of terrestrial resource limitations and management constraints. The proposed scenarios for space facility maturation are essentially open-ended, so a variety of exploration and utilization options continuously become available once initial economic productivity is established.

The basic requirement explored in this approach to space industrialization is the establishment of two off-Earth facilities, one in space and one on the Moon. In this scenario, an Earth-orbital base will provide logistical support and production capability necessary for the creation of useful end products and its own expansion. A space platform should be established early, initially dependent on the Space Shuttle, as a demonstration of "starting kit" operation and advanced production methods. However, rapid factory growth necessitates the use of lunar or asteroidal resources. Therefore, a lunar processing and manufacturing facility (Dalton and Hohmann, 1972), possibly self-replicating (see chapter 5), is presupposed in the growth scenario.

The availability of nonterrestrial materials could make possible a decreasing dependence on Earth-based supplies. Growth of the Space Manufacturing Facility (SMF) subsequently would require no major additional Earth resource inputs. Given a supply of sufficiently inexpensive nonterrestrial materials, SMF output could be returned to Earth directly in the form of useful commercial products or indirectly in the form of solar power generation or satellite servicing.

The present analysis is explicitly guided by the goal of maximizing the use of automation and robotics during expansion of the processing and manufacturing facilities. Even in the early stages many operations can be conducted by remote teleoperators. As research in robotics continues, more and more system functions will be taken over by autonomous robots. While it is unlikely that the human presence soon can be completely eliminated, economic arguments favoring SMF deployment require the assumption of an increasing use of autonomous machine systems.

4.1.2 Rationale for the Utilization of Space

The American push into space, never fully backed by the public, appears in recent years to have slipped even lower on the list of national priorities (Lowman, 1975). The current unwillingness by the political leadership of the country to support space activities is reflected in the weakened budgetary position of NASA, the prime driving force behind the United States civilian space program. Major reasons for this lack of support include:

- A policy of piecemeal exploration
- An emphasis on limited-duration, "one-shot" projects
- Indirect rather than direct benefits achieved by space missions
- The view of human welfare as a byproduct rather than an explicit goal of space activity
- Too great an emphasis on purely scientific benefits
- "Selling" space to particular interest groups with insufficient regard for immediate public interests
- Too little public input in NASA planning.

The weak interest in NASA programs is, however, correctable. It must be established that major future NASA programs will be explicitly tied to the public welfare and that concrete, short-range benefits for individual members of society can and will be achieved. This may be accomplished either by demonstrating that an immediate threat to the American way of life can be averted through the implementation of a particular space program, or by showing that a mission will have a visible economic payback to the public.

Unquestionably the first method has the best chance of loosening the legislative purse strings. Indeed, the strongest public and legislative interest in space was expressed during the Sputnik crisis in 1958 (Overholt et al., 1975). A recent Woods Hole conference concluded that potential triggers for renewed efforts in space might be crisis-based. Among eighteen possibilities listed by panel participants were such events as impending asteroid collision with Earth, rapid changes in the polar icecaps, discovery of extraterrestrial life, some major accomplishment in space by another nation, or a credible military threat. Unfortunately, none of these possibilities suggest a positive planning process since by their very nature they occur unexpectedly (Sadin, private communication, 1980).

One externally generated crisis once thought to provide impetus for further space activities was the prediction by the "Club of Rome" of an impending shortage of critical terrestrial raw materials (Meadows *et al.*, 1972; Laszlo *et al.*, 1977). Subsequent researchers found significant flaws in the study, detracting from the immediacy of the threat (Kahn, 1976; Science Applications, Inc., 1978) and eliminating an impending world food crisis as a major space mission driver.

Still, it must be recognized that "need" is a relative term. For instance, a country (such as the United States) fundamentally committed to economic growth and vitality can find its horizons of economic "need" closing in much faster than, say, a global community committed only to survival. This public perception may inspire a recognition of the connection between the profitability of space ventures and the impending decline of a way of life. The issue of "need" thus reduces to the question of how best to utilize both terrestrial and nonterrestrial resources to avert a fundamental threat to the American standard of living.

Consonant with the above motivational framework, major future space missions must be clearly directed toward the utilization of space for the distributive benefit of the American public, and be designed to avert erosion of national living standards. In addition, the existing economic climate of the U.S. must be taken into consideration: Each project must show a near-term, growing productive capability; it must take appropriate measure of national priorities; it cannot rely too heavily on capital investment; and, finally, national leaders and the public must perceive it as directly beneficial to their own interests. The proposed Space Manufacturing Facility is designed to meet each of the criteria established above.

New resources. The SMF mission utilizes resources not presently available for the clear and direct benefit of the American public. This benefit may include (1) construction of solar power satellite stations to generate energy for Earth, (2) manufacture of useful products on the Moon for terrestrial use predominantly from lunar materials, (3) eventual production of consumer goods in the SMF for Earth, employing the unique qualities of the space environment plus lunar or asteroidal materials, (4) utilization of processes unsuitable, unsafe, or otherwise desirable for application on Earth, and (5) using the SMF as a springboard for further space resource exploration and industrialization.

Near-term growing productive capability. The Space Manufacturing Facility is intended to take full advantage of past, current, and future research in machine intelligence and robotics. Technological enablers now exist in automation, space transportation, and in the results from lunar research. Present competition in industrial robotics is intense, and rapid beneficial developments might be expected to occur even without NASA funding. Serious exploitation of robotics technology in an SMF scenario, however, will accelerate development and permit a growing productive capability from which immediate, near-term human benefits can be siphoned off. The proposed project is open-ended: Growth in productivity is expected with concurrent multiplication of the range of capabilities available, without infusing large amounts of additional capital.

Capital investment. The primary investment is for the establishment of two starting facilities, one on the Moon

and one in Earth orbit. It is anticipated that near-closure (see chapter 5) will be achievable and that minimal human presence will be necessary. Interaction between lunar and Earth-orbiting components allows growth materials required by the orbital module to be supplied from lunar sources, thus greatly reducing supply costs. A major gain with respect to capital investment and production costs is that fewer materials must be flown up from Earth and that almost all the required on-site labor can be performed by automata.

Distributive benefits. Certainly the SMF generates a number of indirect benefits for the public. It opens new horizons of knowledge, advantages American industry in international competition, provides new technologies, and reasserts the U.S. position of leadership in space. However, the public relates only vaguely to such interests, if at all. The establishment of a solar power satellite, on the other hand, is of more direct and tangible value. This kind of SMF product could have direct impact on energy costs now borne by the public and could lead to a visible decrease of dependence on foreign energy supplies.

Standards of living and public perceptions. If the capital investments required are accounted for, the proposed mission can help to stabilize the American standard of living and eventually permit it to continue to rise. Energy scarcity is widely perceived as the root cause of current economic difficulties, a viewpoint stressed repeatedly by the media. Rampant inflation and unemployment, justly or unjustly, are traced directly back to the cost of energy. Recently, however, it has become increasingly apparent that the issue is not simply energy supply but also energy cost. Given the education the public already has received, it should not require too much additional effort to make people aware that their own short- and long-term interests are well-served by the SMF. The poor economic climate actually may prove an added fiscal impetus for the mission rather than a restraint.

4.1.3 Summary of Chapter Contents

The study team focused its efforts on four areas related to the nonterrestrial utilization of materials:

- Material resources needed for feedstock in an orbital manufacturing facility (section 4.2)
- Required initial components of a nonterrestrial manufacturing facility (section 4.3)
- Growth and productive capability of such a facility (section 4.4)
- Automation and robotics requirements of the facility (section 4.5)

Section 4.2 presents an overview of energy and mass available in the Solar System, with special attention to those resources which may be available in the near future and to possible space materials processing techniques. A lunar-to-LEO shuttle system utilizing silane fuel and an Earth-based electromagnetic catapult are possible candidates for the transportation of raw materials and feedstock to low Earth orbit.

Scenarios for establishing an initial orbiting manufacturing facility are developed in section 4.3. To provide some basis for determining the minimum number and types of machines which might be available for space manufacturing and for constructing an automated shop capable of creating additional industrial equipment, a survey of basic manufacturing processes was performed by the team. "Starting kits" were conceptualized which might be useful in creating an ever-widening set of manufacturing devices requiring minimal initial inputs and using solar energy, vacuum, zero-gravity, and robotics to best advantage.

Section 4.4 demonstrates the growth and production potential of the Space Manufacturing Facility using the material resources and starting kits described earlier. Near-, mid-, and long-term examples of product manufacture are developed. These outputs, including Shuttle external tank conversion to simple structures (near-term), electronics components fabrication (mid-term), and the creation of space platforms, pure glasses, satellites, and robots (long-term), are presented as representative samples of SMF growth possibilities.

Section 4.5 concentrates on mission automation and machine intelligence requirements for an SMF. Limitations and functional demands of robotics in space are detailed, with recommendations for future machine intelligence developments. Mission technology drivers in major areas other than automation and machine intelligence are briefly summarized. Finally, section 4.6 provides a general discussion of the implications for society, potential consequences, and necessary sociocultural and political prerequisites for implementation of a space manufacturing mission.

4.2 Materials Background

A survey of Solar-System resources available to mankind in the near-, mid-, and distant-future is appropriate in evaluating the potential of the SMF mission concept. Such background is necessary to identify terrestrial and lunar resources, asteroidal materials, and various additional sources for space manufacturing feedstock. This section describes existing chemical extraction and materials processing alternatives including one new option identified during the course of the study (large-scale electrophoretic lunar soil processing) and expanded possibilities for the metallurgy of native lunar basalts, followed by a consideration of materials transport both from the Moon to low Earth orbit using silane-based propellants derived in part from lunar materials, and from the surface of the Earth to LEO using a ground-based electromagnetic catapult (Mongeau et al., 1981).

4.2.1 *Survey of Solar System Resources*

A survey of extraterrestrial resources reveals a number of major stores of energy and raw materials within the Solar System. Ultimately the most significant of these is the Sun itself. Total solar output is 4×10^{26} W, approximately 6×10^{13} times as much as mankind produced on Earth in 1980. An extremely power-intensive (15 kW/person) world society of 10 billion people drawing its materials resources solely from the common minerals of the Earth's crust would require only a trivial fraction (4×10^{-11}) of the available solar output (Goeller and Weinberg, 1976).

It is especially significant that the mass of capital equipment required to produce a unit of useful solar power in space is very low. It is anticipated that large-scale solar thermal power stations can be built for 0.1–1 metric ton equipment per megawatt (t/MW) and 1–10 t/MW for solar electric power. These estimates are calculated for 1 AU (i.e., Earth-orbital distances) from the Sun. Alternative terrestrial mass/power ratios are much larger – hydroelectric plants, 10^3 to 10^4 t/MW; projected nuclear fusion power stations, 10^3 t/MW; coal-fired plants, 2×10^2 t/MW (with 4000 tons of coal consumed per MW/yr); and terrestrial (ground-based) solar power, more than 10^3 t/MW. Thus, energy systems in space can grow at much faster rates using nonterrestrial materials than is possible on Earth. Energy payback times (time for recovery of initial energy investment) for construction of heliocentric orbital systems at 1 AU is on the order of 10 days. The intensity (I) of solar power varies inversely with the square of the radius (R) from the Sun ($I/I_0 = R_0^2/R^2$; $I_0 = 1.4$ kW/m^2, $R_0 = 1$ AU $= 1.54\times10^{11}$ m), so space energy systems may be operated at least out to the distance of Saturn (about 10 AU) before capital/energy efficiency ratios (measured in t/MW) approach values comparable to alternative terrestrial power systems. This is because very low mass optical reflectors can be used to concentrate the available sunlight.

Other power sources which eventually may become accessible to mankind include the kinetic energy of the solar wind (10^{14} MW); differences in the orbital and rotational energies of the Sun, planets, moons, and asteroids (perhaps allowing payloads to move between these bodies) (Sheffield, 1979); and the thermodynamic energies associated with the differentiation of chemical elements in planetoids across the Solar System. Tidal dams on Earth, terrestrial rocket launches, and space probe gravitational swing-bys have utilized trivial fractions of the potential and kinetic energies of the Earth and Moon, and Mercury, Jupiter, Saturn and their moons.

An appreciation of the magnitude of accessible matter resources in the Solar System is gained by noting that terrestrial industry processed about 20 billion tons (about 10 km^3) of nonrecoverable materials in 1972. (Annual tonnages of chemical elements used industrially are listed in table 4.1.) It can be estimated that humanity has processed slightly less than 10^{12} t (about 500 km^3) of nonrenewable materials since the start of the Industrial Revolution four centuries ago, assuming a 3% annual growth rate. For comparison, a 4.3 km-radius spherical asteroid (density 1.5 t/m^3) also contains 10^{12} t of matter. Thousands of asteroids with masses in excess of 10^{12} t already are known (Gehrels, 1979). Approximate total mass of the known minor planets is 2×10^{18} t, the moons 7×10^{20} t, and meteoritic and cometary matter roughly 10^{12} t. The planets have a total mass of 2.7×10^{24} t.

Mankind has launched about 5000 t into LEO since 1959. Most of this was propellant for Apollo lunar missions and for satellites hurled into geosynchronous orbits or into deep space. Approximately 1000 t was hardware. Averaged over the last 10 years, humanity has ejected mass from Earth at approximately 0.05 t/hr or 400 t/yr. Waldron *et al.* (1979) estimate that oxygen and possibly most of the fuel (silane based) for liquid-propelled rockets can be produced from lunar soil using chemical processing plants with intrinsic capital mass of 100 t/(t/hr) of output. Thus, a LEO propellant production plant weighing about 10 t could service all current major needs if provided with lunar materials. At some point in the future, major mass fractions of space facilities may be constructed of nonterrestrial matter. Space hardware should be produced in orbit at the rate of 10 kg/hr to match the 1970s and anticipated 1980s launch rates.

The United States Space Transportation System (STS), popularly known simply as the "Shuttle," is expected to establish approximately the same mass/year launching ratio during the 1980s at a cost of about $1000/kg to LEO. Energy represents only a small fraction of this expenditure. Perfectly efficient conversion of $0.05/kW-hr electricity into LEO orbital energy (about 10 kW-hr/kg) would cost roughly $0.50/kg for materials transport to orbit, a factor of 2000 less than near-term STS lift prices. Projected bulk transport versions of the STS may lower Earth-to-LEO expenses to $100/kg; still some 200 times greater than the equivalent cost of electrical energy at present-day rates. When launch charges reach $1/kg a large Earth-to-LEO traffic becomes reasonable, since most terrestrial goods are valued at $1–2/kg (Ayres *et al.*, 1979). However, if space industry someday is to approach cost distributions typical of terrestrial industries, then the supply of bulk or raw materials from the Moon and the asteroids must fall to a few ¢/kg (Criswell, 1977a, 1977b). On an energy basis alone, this goal appears achievable using high throughput lunar-mass drivers and relatively cheap solar energy (O'Neill, 1974).

Atmospheres of the various planets and moons are valuable as sources of materials and for nonpropellant braking of spacecraft (Cruz *et al.*, 1979). Deliveries of

TABLE 4.1.– COMPILATION OF AVERAGE COMPOSITION OF LUNAR SOILS FOR 80 ELEMENTS[a]

	Mare					Highland		Basin ejecta		
	High Ti		Low Ti							
	A-11	A-17	A-12	A-15	L-16	A-16	L-20	A-14	A-15	A-17
Al_2O_3, %	13.78	10.97	13.71	10.32	15.51	27.18	23.07	17.41	17.54	20.60
CaO, %	12.12	10.62	10.55	9.74	12.07	15.79	14.07	10.79	11.57	12.86
Cr_2O_3, %	.30	.46	.35	.53	.29	.107	.15	.22	.28	.26
FeO, %	15.76	17.53	15.41	19.75	16.41	5.18	7.35	10.36	11.58	8.59
K_2O, %	.15	.076	.27	.10	.10	.11	.08	.58	.17	.16
MgO, %	8.17	9.62	9.91	11.29	8.79	5.84	9.26	9.47	10.41	10.29
MnO, %	.21	.24	.22	.25	.21	.065	.11	.14	.16	.11
Na_2O, %	.44	.35	.48	.31	.36	.47	.35	.70	.42	.41
P_2O_5, %	.12	.07	.31	.11	.14	.12	.11	.50	.16	.14
SiO_2, %	42.47	39.87	46.17	46.20	43.96	45.09	44.95	48.08	46.59	45.08
TiO_2, %	7.67	9.42	3.07	2.16	3.53	.56	.49	1.70	1.32	1.62
Al, %	7.29	5.80	7.25	5.46	8.21	14.38	12.20	9.21	9.28	10.90
Ca, %	8.66	7.59	7.54	6.96	8.63	11.29	10.06	7.71	6.27	9.19
Cr, %	.21	.31	.24	.36	.20	.07	.10	.15	.19	.18
Fe, %	12.25	13.63	11.98	15.35	12.76	4.03	5.71	10.36	9.00	6.68
K, %	.12	.063	.22	.08	.08	.09	.066	.46	.14	.13
Mg, %	4.93	5.80	5.98	6.81	5.30	3.52	5.59	5.71	6.28	6.21
Mn, %	.16	.19	.17	.19	.16	.050	.085	.11	.12	.085
Na, %	.33	.26	.36	.23	.27	.35	.26	.52	.31	.30
O, %	41.6	39.7	42.3	41.3	41.6	44.6	44.6	43.8	43.8	42.2
P, %	.05	.03	.14	.05	.06	.05	.05	.22	.07	.06
S, %	.12	.13	.10	.063	.21	.064	.08	.088	.08	.06
Si, %	19.84	18.63	21.57	21.58	20.54	21.07	21.00	22.46	21.77	21.06
Ti, %	4.60	5.65	1.84	1.29	2.11	.34	.29	1.02	.79	.97
Ag, ppb	9.0	9.8	62.0	50.0	95.0	9.6	16.2	17.5	56.0	6.5
Ar, ppm	1.0	1.2	.3	.7	---	1.2	---	1.0	---	---
As, ppm	.32	---	.082	.010	.41	.14	.28	.066	---	---
Au, ppb	3.7	2.5	2.5	2.11	2.5	8.47	4.93	6.7	3.3	4.9
B, ppm	3.5	2.0	9.3	---	4.3	5.9	39.0	19.0	---	---
Ba, ppm	140	85.7	413	122	215	127.3	89.6	767.5	279	190
Be, ppm	2.0	---	5.0	1.31	2.2	1.2	---	5.5	2.8	---
Bi, ppb	1.5	7.7	1.5	.36	4.9	1.8	2.7	1.7	.17	---
Br, ppm	.239	.093	.165	---	.21	.217	.13	.41	.06	---
C, ppm	135	82	104	95	---	106.5	---	130	125	155
Cd, ppm	.045	.032	.046	.062	.80	.097	.048	.181	.042	.04
Ce, ppm	50.0	25.3	104.0	31.4	33.4	30.3	20.5	185.0	54.0	46.0
Cl, ppm	30.2	5.7	31.0	7.6	53.5	20.9	13.0	44.0	5.9	---
Co, ppm	32.0	35.0	43.0	54.4	37.0	25.3	40.5	35.8	42.0	33.0
Cs, ppm	.18	.30	.30	.23	.95	.11	.11	.63	.19	.18
Cu, ppm	11.5	11.0	10.3	8.2	31.0	8.26	19.0	11.1	7.9	6.4
Dy, ppm	20.2	12.2	24.6	8.6	10.9	6.8	5.0	39.0	13.6	11.0
Er, ppm	11.5	7.90	15.35	5.13	6.3	4.39	2.5	23.5	7.86	6.5
Eu, ppm	2.0	1.66	1.9	1.01	2.3	1.23	.98	2.64	1.30	1.35
F, ppm	278	---	132	45	242	72	37	219	60	---
Ga, ppm	4.3	7.5	4.3	4.43	4.4	4.5	3.7	6.8	3.6	4.7
Gd, ppm	16.3	11.4	25.7	8.1	9.8	6.7	3.06	34.8	11.74	10.07
Ge, ppm	1.0	.198	.32	.17	1.44	.76	.46	.70	.42	---
H, ppm	51.0	59.6	45.0	63.6	---	56.0	---	79.6	52.0	98.0
He, ppm	60.0	36.0	10.0	8.0	---	6.0	---	8.0	---	---
Hf, ppm	8.9	7.3	12.7	5.2	4.75	3.9	2.9	22.2	7.6	5.5
Hg, ppm	.015	---	.023	---	---	.004	---	---	---	---
Ho, ppm	5.4	---	5.3	1.7	2.5	1.50	.88	7.8	3.3	---
I, ppb	---	2.0	---	---	---	5.6	12.0	---	35.0	---
In, ppb	---	2.4	90.0	3.4	35.6	31.0	19.0	89.0	7.6	3.4
Ir, ppb	7.8	5.4	5.6	3.1	9.7	12.4	9.5	12.4	8.3	8.8
La, ppm	17.3	7.32	38.8	11.3	11.5	11.7	7.6	69.4	24.0	16.9
Li, ppm	16.5	9.77	19.5	9.09	9.7	7.4	5.7	29.8	10.8	11.7
Lu, ppm	1.6	1.03	1.93	.72	.84	.59	.40	3.10	.98	.88
Mo, ppm	.70	---	.34	---	---	.34	---	---	---	---
N, ppm	119	60	84	80	134	89	107	92	190	81
Nb, ppm	15.8	19.1	34.0	13.0	15.9	12.8	12.0	56.0	16.0	18.0
Nd, ppm	42.6	23.0	75.6	23.0	26.9	19.3	10.8	105.0	35.0	27.6

TABLE 4.1.– CONCLUDED

	Mare					Highland		Basin ejecta		
	High Ti		Low Ti							
	A-11	A-17	A-12	A-15	L-16	A-16	L-20	A-14	A-15	A-17
Ne, ppm	5.0	2.0	2.0	2.0	---	1.0	---	2.0	---	---
Ni, ppm	206	131	189	146	174	345	208	321	282	286
Os, ppb	14.0	---	6.0	1.79	30.0	22.0	---	---	---	---
Pb, ppm	2.9	.80	4.8	1.033	6.0	2.58	1.15	10.02	2.5	1.922
Pd, ppb	21.0	---	9.7	6.2	---	24.0	---	50.0	---	---
Pr, ppm	7.7	---	10.1	3.8	---	4.97	4.0	23.0	---	---
Rb, ppm	3.0	1.2	7.28	2.70	1.85	2.48	1.65	15.25	5.0	4.21
Re, ppb	5.26	.47	.34	.39	.36	.82	3.19	1.15	---	---
Rh, ppm	.1	---	.4	---	.077	---	---	---	---	---
Ru, ppm	.6	---	.047	---	.046	.010	---	---	---	---
Sb, ppb	4.1	25.4	47.0	30.0	3.8	9.7	5.7	3.4	---	26.0
Sc, ppm	62.8	65.0	39.2	37.1	39.9	8.9	17.0	21.9	22.0	18.0
Se, ppm	.39	.27	.30	.18	.39	.24	.30	.031	---	.23
Sm, ppm	11.7	8.0	20.3	5.85	8.8	5.38	3.39	30.9	9.6	8.1
Sn, ppm	.7	---	.3	---	1.7	.22	.8	---	---	---
Sr, ppm	193.0	166.0	138.9	104.2	234.0	168.0	140.8	183.8	152.0	150.0
Ta, ppm	1.5	---	1.58	.55	1.4	.50	.50	4.1	1.05	.87
Tb, ppm	3.3	2.63	4.07	1.4	1.5	1.07	.80	6.4	4.2	1.72
Te, ppm	.07	.01	.05	---	.088	.023	.051	.031	---	---
Th, ppm	2.24	.82	6.63	1.76	1.07	1.87	1.44	13.5	4.15	3.01
Tl, ppb	2.1	1.4	2.0	.94	1.6	7.7	6.2	22.0	---	2.4
Tm, ppm	1.5	---	2.02	---	.73	.67	.41	3.9	---	---
U, ppm	1.37	.26	1.61	.483	.300	.52	.45	3.48	.99	.90
V, ppm	66	128	110	191	73.5	25.5	38	49	84	52
W, ppm	.24	.14	.74	.31	---	.31	---	1.9	---	.52
Y, ppm	107	74	145	47	48	39.3	49	242	73	64
Yb, ppm	10.6	7.48	13.7	4.53	5.59	3.86	2.40	22.7	7.3	6.15
Zn, ppm	23.0	49.0	6.3	12.8	25.0	24.0	34.1	28.0	14.5	20.0
Zr, ppm	331	236	503	175	308	163.8	192	842	278	262

[a]Major elements (>0.1%) are reported first as both the usual oxide notation and elements. Data compiled from the Data Base Compilation of the Lunar Sample Curator, NASA Johnson Space Center, Houston, Texas.

propellants and fabricated parts to space from Earth may be sharply reduced by making full use of local (nonterrestrial) materials, energy, and linear and angular momentum.

Terrestrial materials. Progressive developments of more efficient Earth-to-LEO boosters are expected to reduce transport costs eventually to at least $10–20/kg, comparable to the price of transoceanic air travel (Akin, 1979). The major tradeoff is between development costs of new launch systems and rates of transport in t/yr. Thus, Earth-to-LEO shipment of higher-value products (above $10/kg) needed in low annual tonnages is acceptable and should not seriously restrict the growth of space industries (Criswell, 1977a, 1977b). Space manufacturing directly leverages the effectiveness of any system for transporting goods and materials off-Earth if the value added to the space products is less than the value added by launch of functionally similar goods from Earth (Goldberg, 1981).

STS components such as exhausted hydrogen/oxygen propellant tanks can be used for raw materials. Shuttle external tanks could provide approximately 140 kg/hr of aluminum and 10 kg/hr of other elements (e.g., plastics, residual propellants) for early development of manufacturing procedures and products, assuming 30 Shuttle flights per year. (See sec. 4.4.2.)

Earth's upper atmosphere also may prove a valuable source of nitrogen and oxygen for use at LEO and beyond. At 200 km altitude a scoop 1 km in radius oriented perpendicular to the orbital motion intersects approximately 4 t/hr of molecular nitrogen and 3 t/hr of atomic oxygen. Physical convergent nozzles might be used to collect either N_2 or O^+, and a convergent magnetic field might be employed to recover O^+. Power must be supplied to liquefy the gases and to accelerate a portion of the gathered material to maintain orbital velocity.

Lunar resources. Table 4.1 lists major oxides and elements found in samples of the mare and highland areas of the Moon and returned to Earth during the Apollo and Soviet programs. Table 4.2 summarizes the major lunar minerals and the general uses to which each could be put (Arnold, 1977). The Moon is extremely rich in refractories, metals (Fe, Mg, Ti, Al), oxygen and silicon. Extensive

TABLE 4.2.– TYPICAL LUNAR RESOURCE AVAILABILITY

Material	Representative uses	Source	Source material concentration	Beneficiation and processing considerations	Abundance and occurrence
Regolith, not chemically or mechanically separated	Reaction mass, radiation shielding, thermal shielding, spun glass, sintered building material	Regolith	100% of surface material	Handling of dust, excavating	Ubiquitous
Basalt, not chemically separated	Cast basalt for construction	Basaltic flows into maria	100% of subregolith and scattered fragments	Hard rock	Abundant in maria
Nonmetallics	Construction materials, special uses	Plagioclase and processing by-products	70 to 95% of highlands anorthositic rocks; 10 to 40% in mare basalts	Use anorthositic regolith or crush friable anorthosite; basalt is generally tough	Abundant in highlands
Al, Al_2O_3, Ca, CaO, Na, Na_2O, Si, SiO_2, O_2	Metals for construction, ceramics, solar cells, reactants for chemical processing, life support	Plagioclase	70 to 95% of highlands anorthositic rocks; 10 to 40% in mare basalts	Use anorthositic regolith or crush friable anorthosite; basalt is generally tough	Abundant in highlands
Fe, FeO, Ti, TiO_2, O_2	Metals, pigments, life support, special uses	Ilmenite	2 to 20% in mare basalt and mare regolith	Size separation of regolith to concentrate ilmenite	Abundant in maria
Mg, MgO, Fe, FeO, Si, SiO_2, O_2	Metals, ceramics, solar cells	Olivine	0 to 20% in mare basalt; 95% in dunite	Difficult to separate from basalt	Dunite is rare in sample collection, as breccia clasts
H_2, H_2O	Life support, fuels	Cold-trapped volatiles at lunar poles	Unknown	Significant technological development required	Occurrence has not been demonstrated
H_2, C, N	Life support, organics	Solar wind trapped in regolith and soil breccia and buried possibly in polar cold traps	100 ppm in mature regolith and soil breccia	Direct thermal extraction; concentration of ilmenite or <60-μm fraction enhances yield	Ubiquitous, but low grade
Zn, Pb, Cl, S, F, other volatile elements	Industrial materials	Surface deposits on volcanic spherules and regolith fines	5 to 100 ppm concentrated at surfaces; may be higher locally	Requires technique development for low-grade extraction	Two known sources; others possible
P, Zr, F, Cl, Y, Cr		Major components in accessory minerals in KREEP, basalts, etc.	Minerals present in abundance <1% of rock; elements are substantially lower in abundance; local concentrations are conceivable	Exceedingly difficult to concentrate from dispersed source	No known concentrations

knowledge of lunar resources permits the immediate investigation and development of processing techniques to be employed at an early time in space or on the Moon (Criswell, 1978, 1979; Green, 1978; Inculet and Criswell, 1979; Pomeroy and Hubbard, 1977). Further lunar exploration from orbit (European Space Agency, 1979; Minear *et al.*, 1976) and on the surface using machine intelligence techniques (Duda *et al.*, 1979) almost certainly will reveal additional resources. Discovery of volatiles, such as icy-dirt in permanently shadowed craters at the poles (Arnold, 1978; Watson *et al.*, 1963), certainly would expedite the growth of space industries.

The major components of the dark mari surfaces are basalt in the form of lithified or basalt-derived lunar soil and anorthositic plutonic rocks. "Granitic" glass is present in the light highlands.

On the basis of data and samples gathered by the Apollo and Luna missions it has been established that lunar surface basalts can be divided into two classes – high Al/Si (highland basalts) and low Al/Si (mare basalts). The major difference is in feldspar content, which is high in highland basalts and low in mare samples. Major minerals, and others found as minor constituents or traces in lunar basalts, are tabulated in table 4.3.

Pyroxenes occur as enstatite ($MgSiO_3$), wollastonite ($CaSiO_3$), ferrosilite ($FeSiO_3$), and mixtures of all three. Olivines are found as solid solutions of forsterite (Mg_2SiO_4) and fayalite (Fe_2SiO_4), with most falling in the range of 50-75 mole-percent forsterite. Plagioclase feldspars occur as solid solutions of anorthite ($CaAl_2Si_2O_8$) and albite ($NaAlSi_3O_8$), with most in the range of 80-100 mole-% anorthite.

A normative chemical analysis of "typical" lunar basalts is shown in table 4.4. It must be remembered that these values are for only two samples of basalt, and therefore, may not represent all lunar basalts. The composition of lunar soil is essentially the same as for lunar basalt, with grain constituents including agglutinates, basalt clasts, anorthite clasts, plagioclase, olivine, ilmenite, and glass. The average grain size is approximately 40 μm, but lunar soils often display bimodal size distributions.

Plutonic anorthosites are present in the highland areas. The mineral distributions in three anorthosite samples collected during Apollo missions are given in table 4.5.

TABLE 4.3.– MINERAL DISTRIBUTION IN LUNAR BASALTS

Mineral and composition	Highland composition, vol %	Mare composition, vol %
Feldspar (plagioclase) $(Ca,Na)Al_2Si_2O_8$	40-98	15-35
Pyroxene $(Ca,Mg,Fe)SiO_3$	0-40	40-65
Olivine $(Mg,Fe)_2SiO_4$	0-40	0-35
Ilmenite $FeTiO_3$	<2	0-25
Spinels $(Fe,Mg,Al,Cr,Ti)O_4$	<2	<2
Troilite FeS	<2	<2
Apatites $Ca_5(PO_4)_3(F,Cl)_3$	<0.2	<0.2
Zircon $ZrSiO_4$	<0.2	<0.2
Amphibole $(Ca,Mg,Fe)(Si,Al)_8O_{22}F$	<0.2	<0.2
Rutile TiO_2	<0.2	<0.2
Magnetite Fe_3O_4	<0.2	<0.2

TABLE 4.4.—A NORMATIVE ANALYSIS OF TYPICAL LUNAR BASALTS

Compound	Weight, %
SiO_2	37-48
TiO_2	4-13
Al_2O_3	7-11
FeO	16-22
MnO	0.2-0.3
MgO	6-16
CaO	8-13
Na_2O	0.2-0.5
K_2O	0.1-0.5
Cr_2O_3	0.3-0.6
P_2O_5	0.1-0.4
S	0.1-0.8

TABLE 4.5.—MODAL MINERALOGY OF LUNAR ANORTHOSITE

Mineral	Weight, %		
	Sample 15415	Sample 60025	Sample 76535
Pyroxene	3	1	4-5
Plagioclase	97	98-99	37-60
Olivine	---	---	35-58

Lunar glasses occur in two forms, basaltic and "granitic." Basaltic glass has roughly the same normative chemical distribution as lithified basalt. "Granitic" glass is somewhat anomalous, and may represent the quenched product of magma fractionation. The normative chemical composition of lunar glasses is shown in table 4.6.

TABLE 4.6. NORMATIVE CHEMISTRY OF LUNAR GLASS

Compound	Basaltic, weight, %	Granitic, weight, %
SiO_2	44.6	73.2
TiO_2	2.1	.5
Al_2O_3	8.7	12.4
Cr_2O_3	.6	.4
FeO	22.5	3.5
MgO	11.4	.1
CaO	9.4	1.3
Na_2O	.3	.6
K_2O	.4	5.9

Asteroidal materials. Asteroids, especially those with near-terrestrial orbits, are expected to offer a wider range of useful minerals and elements than is available on the Moon (Gehrels, 1979). These bodies may be able to supply many minerals rare or absent on the Moon. For instance, spectroscopic analysis of outgassed volatiles suggests that some asteroids may have abundant water-ice (Degewij, 1980). Those bodies with carbonaceous chondritic composition should contain abundant carbon (up to a few percent by weight), an element which is comparatively rare in lunar soil. The water and carbon expected to be obtainable from asteroids could allow use of water-based and organic chemistry in space factories, techniques otherwise infeasible on a dry, carbonless Moon (though careful recycling will still be necessary). Asteroidal iron-nickel fractions should contain metals in the reduced state and may be rich in platinum-group elements. These resources complement those already found on the lunar surface.

It is conceivable that small quantities of meteoritic material have been trapped in the "gravity wells" (Lagrangian points L4 and L5) of the Earth-Moon (Freitas and Valdes, 1980) and Earth-Sun (Dunbar, 1979) systems. Should such materials exist, very little energy would be required to retrieve them to LEO.

As of 1978, 40 asteroids were known to have trajectories passing close to or inside of the Earth's heliocentric orbit. It has been estimated that 500-1000 Apollo and Amor objects have diameters in excess of 700 m (mass about $1\text{-}5\times10^6$ t), together with more than 100,000 objects greater than 100 m diam with a mass of about 10^6 t each (Arnold and Duke, 1978; Gehrels, 1979). Although most of these asteroids have high velocities and inclinations with respect to Earth's motion around the Sun, a few percent have low inclinations and perihelion near Earth orbit. One, Anteros, can be reached from LEO with less delta-V than is required for transfer to the Moon (Hulkower, Jet Propulsion Lab, private communication, 1980). Several detailed studies have been conducted to examine the possibility of returning one or more of these objects to the vicinity of Earth for use in space manufacturing (Bender et al., 1979; Gaffey et al., 1979; O'Leary et al., 1979). Methods considered for retrieval have included mass drivers, pellet launchers, solar sails, or detonation propulsion, perhaps expedited by gravitational swing-bys of Mars, Venus, Earth, or the Moon, as required. Extensive increases in ground-based searches and exploration missions to favorable objects should be initiated to fully characterize these resources in preparation for utilization. Table 4.7 summarizes the compositional information now available on Apollo/Amor asteroids, some of which are expected to be a far richer source of volatile materials than low-latitude lunar soils.

Between the orbits of Mars and Jupiter lie thousands of asteroids. These range in diameter from 1000 km down to the limits of telescopic visibility – a few kilometers

TABLE 4.7.– CHARACTERIZATION OF APOLLO/AMOR OBJECTS
(Adapted from Billingham *et al.*, 1979)

Number	Name	Aphelion, AU	Perihelion, AU	Surface type[a]	Albedo[b]	Diameter,[b] km
433	Eros	1.458	1.13	Olivine, pyroxene, metal (~H chondrite)	0.17	23
887	Alinda	2.516	1.15	Olivine, carbon (~C3 carbonaceous chondrite)	.17	4
1036	Ganymede	2.658	1.22	"S" – probably silicate or metal-rich assemblage	---	(~35)
1566	Icarus	1.078	.19	Pyroxene (olivine, metal?)	.17	1
1580	Betulia	2.196	1.12	"C" – opaque-rich assemblage, possibly carbonaceous	.05	6
1620	Geographos	1.244	.83	"S" – probably silicate or metal-rich assemblage	.18	3
1627	Ivar	1.864	1.12	"S" – probably silicate or metal-rich assemblage	---	(~7)
1685	Toro	1.368	.77	Pyroxene, olivine	.12	3
1864	Daedalus	1.461	.56	"O" – probably silicate or metal-rich assemblage	---	(~2)
1960 UA	---	2.26	1.05	"U" ?	---	---
1976 AA	Arnold	.97	.79	"S" – probably silicate or metal-rich assemblage	.17	1

[a]Where adequate spectral data are available, mineralogical characterizations and meteorite equivalents are given (from work by Gaffey and McCord, 1977). Where only UBV colors (i.e., C, S, O, U) are available, the Chapman-Morrison-Zellner classification of the object as summarized by Zellner and Bowell (1977) is given. Underlined classification symbols indicate those based on a single classification criterion. Probable mineral assemblages are indicated.

[b]Albedos and diameters as summarized by Morrison (1977). The diameters in parentheses were derived assuming an average albedo for the "O-S" class of the object and should be considered as indicative only.

(Gehrels, 1979; Morrison and Wells, 1978). Certainly still smaller bodies exist but cannot be seen from Earth. Table 4.8 summarizes available information on the widely variable surface compositions of asteroids (Lunar, 1978). The predicted large quantities of rare elements, such as chromium and vanadium, and common metals such as iron and nickel might ultimately have great importance to terrestrial markets and space industries (Gaffey and McCord, 1977; Kuck, 1979). Industrial facilities and habitats constructed from asteroidal materials would make possible the rapid spread of humanity throughout the Solar System.

Investigation and development of asteroidal resources will require at least a three-phase approach. First, it is important to find and catalogue the populations and spectral classes of near-Earth asteroids. This could begin at once with a modest investment in a dedicated automated telescope and television camera system which, it is estimated, should be able to find approximately one new Earth-crossing asteroid every night (Gehrels, 1979).

Second is the necessity for direct exploration and sample-return missions. Although there is evidence suggesting that asteroids are equivalent to terrestrial meteorites in composition, the precise physical structures of these bodies are unknown. They may be solid, "fluffy," or more like "raisin bread" with rocks and metals distributed in some matrix. Refining and processing system designs would be significantly affected by the structural configurations of asteroids.

The third and final phase involves large-scale utilization of asteroidal materials either on-site or following transport into near-Earth space. There is a need to develop systems for despinning asteroids, emplacing powerful thrusters, then returning the body to near-Earth space. Ultimately, whole factories might be delivered to or evolved upon individual asteroids. One unusual possibility is that automated factories sent to asteroids could "blow" local materials (metals, glasses, composites) into large, thin, glass-like bubbles many kilometers across, or into metal-coated film

TABLE 4.8.– ASTEROID DATA

[Compiled by Clark Chapman and Ben Zellner from the TRIAD[a] data file]

Asteroid	Semimajor axis, AU	Eccentricity	Inclination, deg	Absolute magnitude B(1.0), mag	Color U-B, mag	Color B-V, mag	Albedo[b]	Diameter,[c] km	Rotation period, hr	Type,[d]	Inferred mineralogy,[e]
Asteroids larger than 200 km in diameter (listed in order of size)											
1 Ceres	2.767	0.0784	10.61	4.48	0.42	0.72	0.053	1020	9.078	U	Silicate (olivine?) + opaque (magnetite?)
4 Vesta	2.362	.0890	7.13	4.31	.48	.78	.235	549	5.34213	U	Clinopyroxene (+ plagioclase?)
2 Pallas	2.769	.2353	34.83	5.18	.26	.65	.079	538[f]	7.88106	U	Silicate (olivine?) + opaque (magnetite?)
10 Hygiea	3.151	.0996	3.81	6.50	.31	.69	.041	450	18	C	Phyllo-silicate + opaque (carbonaceous?)
511 Davida	3.187	.1662	15.81	7.36	.35	.71	.033	341	5.12	C	Phyllo-silicate + opaque (carbonaceous?)
704 Interamnia	3.057	.1553	17.31	7.24	.25	.64	.035	339	8.723	C	Silicate (olivine?) + opaque (magnetite?)
31 Euphrosyne	3.154	.2244	26.30	7.28	---	---	---	(333)	---	CM	---
451 Patientia	3.061	.0772	15.23	8.05	.31	.67	.026	327	7.11	C	---
65 Cybele	3.434	.1154	3.55	7.99	.28	.68	.022	308	---	C	---
52 Europa	3.092	.1138	7.47	7.62	.35	.68	.035	290	11.2582	C	Phyllo-silicate + opaque (carbonaceous?)
16 Psyche	2.920	.1390	3.09	6.88	.25	.70	.093	252	4.303	M	Nickel-iron (+ enstatite?)
324 Bamberga	2.686	.3360	11.16	8.07	.29	.69	.031	251	8	C	Phyllo-silicate + opaque (carbonaceous?)
3 Juno	2.670	.2557	12.99	6.51	.42	.82	.151	248	7.213	S	Nickel-iron + olivine + pyroxene
15 Eunomia	2.642	.1883	11.73	6.29	.44	.82	.167	246	6.0806	S	Nickel-iron + silicate (olivine ≫ pyroxene)
13 Egeria	2.576	.0889	16.50	8.15	.45	.75	.033	241	7.045	C	---
45 Eugenia	2.721	.0806	6.60	8.31	.27	.68	.030	228	5.700	C	---
87 Sylvia	3.481	.0985	10.85	8.12	.24	.69	---	(225)	---	CMEU	---
19 Fortuna	2.442	.1576	1.56	8.45	.38	.75	.030	221	7.46	C	Phyllo-silicate + opaque (carbonaceous?)
216 Kleopatra	2.793	.2520	13.09	8.10	.24	.72	---	(219)	5.394	CMEU	---
532 Herculina	2.771	.1789	16.35	8.05	.43	.86	.120	217[g]	9.406	S	Pyroxene + olivine + nickel-iron? + opaque?
624 Hektor	5.150	.0248	18.26	8.65	.26	.76	.038	216[h]	6.9225	U	---
107 Camilla	3.489	.0699	9.92	8.28	.29	.70	.037	210	4.56	C	---
7 Iris	2.386	.2303	5.50	6.84	.47	.83	.160	210	7.135	S	Nickel-iron + olivine + minor pyroxene
24 Themis	3.138	.1208	.77	8.27	.34	.69	---	210	8.375	C	---
409 Aspasia	2.575	.0733	11.26	8.31	.31	.71	---	208	---	C	---
88 Thisbe	2.768	.1619	5.22	8.07	.28	.67	.045	207	6.0422	C	Phyllo-silicate + opaque (carbonaceous?)
747 Winchester	2.994	.3438	18.15	8.84	.32	.71	.024	205	8	C	---
702 Alauda	3.194	.0347	20.54	8.29	.31	.66	---	205	---	C	---
165 Loreley	3.128	.0802	11.24	8.81	.31	.74	---	203	---	C	---
Other interesting asteroids											
8 Flora	2.202	0.1561	5.89	7.73	0.46	0.88	0.125	153	13.6	S	Nickel-iron + clinopyroxene
25 Phocaea	2.401	.2531	21.61	9.07	.51	.93	.184	65	9.945	S	Nickel-iron + pyroxene + clinopyroxene
44 Nysa	2.422	.1517	3.71	7.85	.26	.71	.467	72	6.418	E	Enstatite?
80 Sappho	2.295	.2008	8.66	9.22	.50	.92	.113	86	>20	U	Silicate (olivine?) + opaque (carbonaceous?)
158 Koronis	2.868	.0559	1.00	10.95	.38	.84	---	36	---	S	---
221 Eos	3.014	.0958	10.85	8.94	.41	.77	---	(97)	---	U	Silicate (olivine?) + opaque (carbonaceous?)
279 Thule	4.258	.0327	2.34	9.79	.22	.77	---	(60)	---	MEU	---
349 Dembowska	2.925	.0862	8.26	7.24	.55	.97	.260	145	4.7012	R	Olivine ≫ pyroxene (+ nickel-iron?)
433 Eros	1.458	.2220	10.83	12.40	.50	.88	.180	16	5.2703	S	Silicate (olivine = pyroxene) + minor nickel-iron
434 Hungaria	1.944	.0736	22.51	12.45	.24	.70	.300	11	---	E	---
785 Zwetana	2.576	.2029	12.72	10.73	.17	.64	.078	45	---	U	---
944 Hidalgo	5.820	.6565	42.49	12.05	.23	.74	---	(39)	10.0644	CMEU	---
1566 Icarus	1.078	.8267	22.99	17.32	.54	.80	---	(1.7)	2.2730	U	---
1580 Betulia	2.196	.4905	52.04	15.66	.27	.66	---	6.5	6.130	C	---
1620 Geographos	1.244	.3351	13.33	15.97	.50	.87	---	2.4	5.2233	S	---
1685 Toro	1.368	.4360	9.37	16.20	.47	.88	---	(7.6)	10.1956	U	Pyroxene + olivine?

[a]TRIAD ≡ Tucson Revised Index of Asteroid Data is the source of all data, except as noted in subsequent footnotes. Contributors to this computerized file are: D. Bender (osculating orbital elements), E. Bowell (UBV colors), C. Chapman (spectral parameters), M. Gaffey (spectrophotometry), T. Gehrels (magnitudes), D. Morrison (radiometry), E. Tedesco (rotations), and B. Zellner (polarimetry). TRIAD is described in *Icarus* 33, 630-631 (1978). To use TRIAD, contact: B. Zellner, Lunar and Planetary Laboratory, University of Arizona, Tucson, Arizona 85721.

[b]Albedos are geometric albedos from radiometry. They are not always consistent with tabulated diameters.

[c]Except as noted, diameters are from Bowell *et al.* (*Icarus*, Sept. 1978). Values are less reliable for asteroids for which no albedo is listed in previous column. Especially unreliable diameters are listed in parenthesis.

[d]Taxonomic type, related to surface composition, is from Bowell *et al.* (*Icarus*, Sept. 1978) wherein the types are defined.

[e]From Gaffey and McCord (*Proc. Lunar Sci. Conf. 8th*, p. 113-143, 1977), here augmented in several cases by C. Chapman. Refers only to optically important phases.

[f]Stellar occultation diameter (Wasserman *et al.* and Elliot *et al.*, *Bull. Amer. Astron. Soc.*, Oct. 1978).

[g]Stellar occultation diameter (Bowell *et al.*, *Bull. Amer. Astron. Soc.*, Oct. 1978).

[h]Hartman and Cruikshank (*Icarus*, in press, 1979).

(*Lunar*, 1978)

for use as solar sails (Drexler, 1980; Nichols, 1979, unpublished report, CIT, Pasadena, Calif.), or as mirrors.

Each of the three asteroid resource development phases is an excellent driver for machine intelligence, robotics, and teleoperation technologies. Long mission times to asteroids favor automation over manned missions. However, it appears that emplacement of thrusters, large-scale bubble-blowing and processing are beyond state-of-the-art, especially in the absence of teleoperation.

Other Solar System resources. Eventually, the resources of the planets (Greeley and Carr, 1975) and their major satellites may become accessible to mankind. Initial attempts at utilization probably will focus on the moons of Mars to support permanent exploration of that planet as well as travel between Mars and the Earth, and beyond. Much of the technology needed for maintaining permanent occupancy of LEO and the Moon should help make extensive exploration of Mars economical. The atmospheres of Venus, Jupiter, Saturn, and their moons and rings are likely early-target resources within these planetary systems (Table 4.9, Lunar, 1978). Later the surface materials of many of the moons may be accessed (Burns, 1977). The radiation belt of Jupiter constitutes a major impediment to utilization of that diverse system. (Access to inexpensive mass for shielding would permit both manned and unmanned penetration of the Jovian magnetosphere for extended periods of time.) Methods have been suggested for extracting energy directly from the particle radiation of the belts by means of secondary emission of charged particles.

Comets, the solar wind, and the Sun are the last major material resources within the Solar System. Most comets pass through the inner Solar System at very high velocities and inclinations (table 4.10, Lunar, 1978). To dependably retrieve large quantities of cometary material it may be necessary to locate and intercept these bodies in the outer Solar System or beyond and provoke repeated gravitational encounters with various planets to effect capture for near-Sun use. These bodies should be exceptionally rich sources of C, N, H, Na, and other volatile elements. Wetherill (1979) estimates that comets, on a 100,000-year timescale, become new Apollo/Amor objects at the rate of 10^{11} t/yr. Deliberate capture probably could increase this rate by several orders of magnitude.

The solar wind is the outward flow of fully ionized gases (at least 10^{13} t/yr) from the Sun. Presumably, all elements present in the Sun are represented in the solar wind. Table 4.11 gives estimates of the annual output tonnages of the elements, assuming each is present with the same distribution as the cosmic abundance (Allen, 1976). (It is assumed that the hydrogen flux (2×10^{18} ions/cm^2-sec) is omnidirectional from the Sun.) Some type of magnetodynamic systems would clearly be required to collect the solar wind. Perhaps flux-braking by the solar gravitational force is possible, via many convergent magnetic nozzles. Significant fractions of the solar wind might be condensed into grains in convergent regions of such magnetic loops. Though the team can offer no conceptual designs for such systems, it is intriguing that the solar wind output of most elements rivals or far exceeds their corresponding current annual terrestrial production rates. In particular, this source could provide enormous masses of hydrogen throughout the Solar System. Given a means of collecting large fractions of the solar wind, eventually it may be possible to tap tiny portions of the 2×10^{27} ton mass of the Sun itself. Such a "star-centered" resource technology capability could decouple the extrasolar spread of humanity and its artifacts from the need for detailed knowledge of the star system of destination.

4.2.2 Extraction and Materials Processing Alternatives

The development of material processing techniques suited to nonterrestrial conditions is absolutely essential if the proposed SMF growth scenario is ever to take place. Studies have been conducted on the gathering of lunar materials for use in situ and elsewhere (Criswell (see Carrier), 1980; Fields and Weathers, 1967). Ultimately, SMF output must be fabricated from feedstock derived from lunar, asteroidal, or other space materials. The production of such diverse components as lubricants, coils, semiconductor chips and structural components requires a versatile and efficient raw material processing capability. Furthermore, this processing system must be fully automation-compatible. Mass multiplication is one key consideration in a growing space-processing facility. Every effort should be made to minimize both the quantity of processing materials brought from Earth per unit of nonterrestrial products, and the mass of the capital equipment (both terrestrial and nonterrestrial) per unit of output per unit of time. It is desirable for the fraction of all such terrestrial material supplied per unit of output product, called the "Tukey Ratio" (Heer, unpublished draft notes of the Proceedings of the Pajaro Dunes Goal-Setting Workshop, June 1980), to approach zero as deployment and growth proceed – or, alternatively, for the mass multiplication (referenced to Earth-originating materials) to approach infinity.

Another important aspect of SMF design is the ability of the primary processing equipment to accept a wide range of input materials, thus minimizing the need for intensive and extended exploration and characterization of source materials. It appears that this approach already may be possible for the explored regions of the Moon due in part to the limited variety of lunar materials and glasses (Waldron et al., 1979). Additionally, mass multiplication factors in excess of 100 can be anticipated for one or more proposed lunar materials processing schemes (Criswell, 1978, 1979).

TABLE 4.9.– PLANETARY ATMOSPHERES

[Compiled by Glenn Orton]

	Venus	Earth	Mars	Jupiter	Saturn	Uranus	Neptune
Surface pressure	93 ± 2 bars	1.00137 bars (mean sea level)	5-10 mb, variable	Undefined	Undefined	Undefined	Undefined
Temperature at surface (or at one bar of pressure where surface not defined)	741 ± 7 K	~290 K	210-240 K, variable	170 ± 10 K	140 ± 20 K	80 ± 30 K	80 ± 30 K
Number mixing ratio of principal constituents	0.95 ± 0.05 CO_2	N_2 0.79 O_2 0.21	0.953 CO_2	H_2 0.90 ± 0.05 He 0.10 ± 0.05	*a* H_2 (most abund.) He	*a* H_2 He?	*a* H_2 He?
Number mixing ratio of minor constituents	0.05 ± 0.05 Ar/N_2 vaiable H_2O	CO_2 3.3×10^{-4} $H_2O \lesssim 5\times10^{-3}$ (variable)	0.027 N_2 0.010 Ar 0.0013 O_2	CH_4 $0.5\text{-}2.0\times10^{-3}$ $NH_3 \leqslant 2\times10^{-4}$	CH_4[a] NH_3	CH_4[a] NH_3?	CH_4[a] NH_3?
Known trace constituents	CO HCl He HF H_2SO_4	N_2O CO CH_4 O_3 and many more	CO H_2O Ne Kr Xe O_3	H_2O CO GeH_4 PH_3 C_2H_2 C_2H_6	PH_3 C_2H_2? C_2H_6		C_2H_6?
Principal sources of aerosols	Concentrated H_2SO_4 droplets	H_2O ice surface dust	H_2O ice CO_2 ice wind blown surface "dust"	NH_3 ice hydrocarbons? NH_4SH?	NH_3 ice? hydrocarbons?	CH_4 ice? NH_3 ice? hydrocarbons?	CH_4 ice? NH_3 ice hydrocarbons?
Mean horizontal wind at surface[b]	0-2 m sec^{-1}	0-10 m sec^{-1}	2-9 m sec^{-1}	Differential zonal velocities with max value ~200 m sec^{-1}	Differential zonal velocities with max value ~450 m sec^{-1}	*a*	*a*
Maximum wind in atmosphere[c]	~100 m sec^{-1}	~45-65 m sec^{-1}	~60-80 m sec^{-1}	Differential zonal velocities with max value ~200 m sec^{-1}	Differential zonal velocities with max value ~450 m sec^{-1}	*a*	*a*

Error bars are one standard deviation.
[a]Too uncertain for quantitative entry.
[b]For midlatitudes in spring or autumn where global and seasonal effects are present.
[c]Where distinguishable from surface.

(*Lunar*, 1977)

C-2

TABLE 4.10.– COMETS

[Compiled by Ray Newburn]

Comet[a]	Period,[b] yr	Perihelion distance,[b] AU	Inclination,[b] deg	Absolute magnitude,[c] H_{10}	Remarks
Selected short-period comets					
Encke (1974 V) (1977)	3.30	0.34	12.0	9.7 (pre-perihelion)	Shortest period comet known. Smallest perihelion distance of any comet with P < 100 years. Fan-shaped coma. Sometimes shows weak ion tail. No continuum in spectra. Often mentioned as space-probe target.
Tempel 2 (1977d)	5.26	1.36	12.5	8.4	Third shortest period. Fan-shaped coma. No tails. Strong continuum in spectra. Possible space-probe target. Brightest about 3 weeks after perihelion.
Tuttle-Giacobini-Kresak (1973 VI)	5.56	1.15	13.6	11.5	A few days before perihelion and 8–35 days after perihelion in 1973, this comet flared up in brightness by nine magnitudes (a factor of 4000).
d'Arrest (1976 IX)	6.23	1.17	16.7	9.5	Visible to naked eye briefly in 1976, close approach to Jupiter in 1979 will increase perihelion to 1.29 AU. Large, fan-shaped coma. Brightness usually increases 3 magnitudes *after* perihelion.
Giacobini-Zinner (1978h)	6.52	.99	31.7	10.0	Striking tail for so faint a comet. Meteoroids apparently very low density, "fluffy" objects.
Schwassmann-Wachmann 1 (1974 II)	15.03	5.45	9.7	~7.5	Smallest eccentricity (0.105) and largest perihelion of any short period comet. Shows periodic flares in brightness of ~5 magnitude.
Halley (1910 II)	76.09	.59	162.2	5.0	Brightest comet with P < 100 years. Well developed ion and dust tails. Strong continuum in spectra. Poor apparition as seen from Earth in 1986. Possible target for space probe flyby.
Selected long-period comets					
Ikeye-Seki (1965 VIII)	800	0.008	141.9	6.5	One of a family of comets with similar orbital elements that passes through the solar corona (Kreutz family).
Tago-Sato-Kosaka (1969 IX)	~110,000	.47	75.8	6.6	First comet observed at Lα wavelengths (1216A). Vast hydrogen corona found (~10^7 km diameter).
Bennet (1970 II)	~1,700	.54	90.0	4.3	Spectacular naked eye object. Most thoroughly studied comet until Kohoutek.
Kohoutek (1973 XII)	~79,000	.14	14.3	5.2 (pre-perihelion)	The public was disappointed, but science gained tremendously from a well-planned, coordinated program of research.
West (1976 VI)	~6,400,000	.20	43.1	4.4 (post-perihelion)	Nucleus split into four pieces near perihelion. Very spectacular naked eye object. Unusual banded dust tail.

[a]Comets are normally named after their discoverers, but no more than the first three independent observers are so recognized. A few comets have been named after those who made extensive studies of their motion (e.g., Halley and Encke). Comets with periods less than 200 years are arbitrarily called "short-period" and are often written with a preceeding P/ for periodic (e.g., P/Tempel 2). Long-period comets are sometimes preceeded by C/ just to designate they are comets (e.g., C/West). When one observer or combination of observers discovers more than one *short-period* comet, the names are followed by an Arabic numerical in order of their discovery to tell them apart (e.g., P/Tempel 1 and P/Tempel 2).

In addition to their discoverers' names, comets are given a temporary designation of the year followed by a lower case letter indicating the order of discovery or recovery. Thus new comet C/Meier is 1978f, while 1978h is P/Giacobini-Zinner making its tenth observed appearance. A few comets such as P/Encke can be observed completely around their orbits. These are designated "annual" comets and are not given temporary letter designations. After about two years, when it is reasonably certain that all of the comets with perihelion passage in a given year have been discovered, each comet is given a permanent designation of the year and Roman numeral indicating the order in which it passed perihelion. Thus P/Encke was 1971 II and 1974 V, and sometime in 1979 it will receive a 1977 permanent designation. These permanent designations are often used together with the name for long period comets [e.g., C/West (1976 VI)] since many discoverers have more than one long-period comet to their credit. The comet 1978a was also discovered by West, for example, while 1973e (1973 VII) and 1973f (1973 XII) were both discovered by Kohoutek, as for that matter were 1970 III, P/Kohoutek (1975 III), and P/West-Kohoutek-Ikemura (1975 IV).

Recent review papers on comets can be found in *Comets Asteroids Meteorites Interrelations, Evolution and Origins,* A. H. Delsemme (ed.), University of Toledo, 1977 and in *The Study of Comets,* Proceedings of IAU Colloquium No. 25, B. Donn, M. Mumma, W. Jackson, M. A. Hern and R. Harrington (eds.), NASA SP-393, 1976.

[b]From Marsden "Catalog of Cometary Orbits, 2nd Edition." This is the primary source of orbital data for all comets.

[c]Magnitude at 1 AU from Earth and from Sun (extrapolated to that distance, if the comet doesn't actually achieve it, using a 4th-power law with heliocentric distance).

(*Lunar,* 1978)

TABLE 4.11.– COMPOSITION AND MASS OF ANNUAL SOLAR WIND OUTFLOW

Element	Cosmic abundance	Estimated solar wind abundance, ton/yr	Earth output (1977), tons
Actinium	0	0	---
Aluminum	9.5E 4	1.9E 9	1.5E 8
Americium	0	0	---
Antimony	.2	1.8E 4	7.9E 4
Argon	1.5E 5	4.4E 9	5.5E 5
Arsenic	4	2.2E 5	3.8E 4
Astatine	0	0	---
Barium	3.7	3.7E 5	2E 7[a]
Berkelium	0	0	---
Beryllium	20	1.3E 5	107
Bismuth	.1	1.5E 4	8.8E 6
Boron	24	1.9E 5	3.1E 6
Bromine	13	7.6E 5	338
Cadmium	.9	7.4E 4	1.6E 4
Calcium	4.8E 4	1.4E 9	1.6E 4
Californium	0	0	---
Carbon	3.5E 6	3E 10	7E 7[a]
Cerium	2.3	2.4E 5	3E 5[a]
Cesium	.5	4.8E 4	80[a]
Chlorine	9000	2.4E 8	5E 8[a]
Chromium	7800	3E 8	1E 7
Cobalt	1800	7.8E 7	3E 4
Copper	210	9.8E 6	8E 6
Curium	0	0	---
Dysprosium	.6	7.1E 4	---
Einsteinium	0	0	---
Erbium	.3	3.6E 4	200[a]
Europium	.2	2.2E 4	---
Fermium	0	0	---
Fluorine	1500	2.2E 7	3E 7[a]
Francium	0	0	---
Gadolinium	.7	6.1E 4	5E 3[a]
Gallium	11	5.6E 5	400[a]
Germanium	51	2.7E 6	8.2
Gold	.1	1.4E 4	1.6E 3
Hafnium	.4	5.2E 4	8E 4
Helium	3.1E 9	9.1E 12	1E 5[a]
Holmium	.1	1.2E 4	200[a]
Hydrogen	4E 10	3E 13	6E 7[a]
Indium	.11	9.2E 3	44
Iodine	.8	7.5E 4	1.1E 4
Iridium	.8	1.1E 5	3[a]
Iron	6E 5	2.5E 10	7.5E 9
Krypton	51	3.1E 6	1E 3[a]
Lanthanum	2	2E 5	1E 5[a]
Lawrencium	0	0	---
Lead	.5	7.6E 4	3.1E 6
Lithium	100	5.1E 5	4.9E 3
Lutetium	.05	6.4E 3	200[a]
Magnesium	5.1E 5	1.6E 10	1.5E 5
Manganese	6900	2.8E 8	2.4E 5
Mendelevium	0	0	---
Mercury	.3	4.4E	7.6E 3
Molybdenum	2	1.4E 5	1E 5
Neodymium	1.4	1.5E 5	1E 5[a]
Neon	8.6E 6	1.2E 11	2E 4[a]
Neptunium	0	0	---
Nickel	2.7E 4	1.1E 9	8.5E 5
Niobium	1	6.8E 4	6E 4[a]
Nitrogen	.66E 7	6.8E 10	6E 7
Nobelium	0	0	---
Osmium	1	1.3E 5	2[a]
Oxygen	2.2E 7	2.5E 11	5.6E 7
Palladium	.7	5.4E 4	1E 3[a]
Phosphorus	1E 4	2.2E 8	2E 8[a]
Platinum	1.6	2.3E 5	218
Plutonium	0	0	---
Polonium	0	0	---
Potassium	3200	9.1E 7	2E 8[a]
Praseodymium	.4	4.1E 4	3E 4[a]
Promethium	0	0	---
Protactinium	0	0	---
Radium	0	0	---
Radon	0	0	---
Rhenium	.135	1.8E 4	5
Rhodium	.2	1.5E 4	100[a]
Rubidium	7	4.4E 5	40[a]
Ruthenium	1.5	1.1E 5	---
Samarium	.7	7.7E 4	---
Scandium	28	9.2E 5	---
Selenium	68	8.9E 6	1.3E 3
Silicon	1E 6	2.1E 10	2.5E 7
Silver	.3	2.3E 4	1.1E 4
Sodium	4.4E 4	7.4E 8	8E 6
Strontium	19	1.2E 7	3.4E 4
Sulfur	3.75E 5	6.8E 9	5.9E 7
Tantalum	.07	9.2E 3	430
Technetium	0	0	---

[a]Freitas, R., 1980a.

TABLE 4.11.– CONCLUDED

Element	Cosmic abundance	Estimated solar wind abundance, ton/yr	Earth output (1977), tons
Tellurium	4.7	4.4E 5	8E 3[a]
Terbium	.1	1.2E 4	---
Thallium	.1	1.5E 4	40[a]
Thorium	0	0	1.1E 4
Thulium	.03	3.7E 3	2E 3[a]
Tin	1.3	1.1E 4	2.6E 5
Titanium	2400	8.4E 7	4.8E 4
Tungsten	.5	6.7E 4	4.7E 4
Uranium	.1	1.7E 4	3.2E 4
Vanadium	220	8.2E 6	3.2E 4
Xenon	4	3.8E 5	50[a]
Ytterbium	.2	2.5E 4	200[a]
Yttrium	9	5.7E 5	312
Zinc	490	2.3E 7	6.8E 6
Zirconium	55	3.7E 6	4.7E 5

As on Earth, a continuing tradeoff between availability of primary materials, processing options, and substitution of materials can be expected. Systems designed for the Moon might not be appropriate for Mars, an iron asteroid, or Titan. Still, most of this section describes silicate minerals processing as these are the dominant components of lunar soil and seem likely to be representative of the composition of many asteroids, Mercury, and the moons of Mars. Since the Solar System offers a much wider range of compositions and conditions, many alternative types of manufacturing facilities may be expected to evolve, many of which may eventually prove useful on Earth.

Chemical extraction techniques. The first most important component of the SMF is the chemical processing facility. The ultimate success of the space manufacturing venture hinges upon the ability to process nonterrestrial materials without importation of terrestrial reagents. This task is further complicated by the additional requirement that the processing capability grow at a rate equal to or greater than the overall growth rate of the SMF. The applicability of a number of established chemical engineering technologies to the processing of low-latitude lunar materials, including (1) carbothermic reduction, (2) carbochlorination, (3) electrolysis, (4) NaOH treatment, and (5) HF acid leaching, has been suggested (Waldron et al., 1979).

In carbothermic reduction anorthite is broken down and refined. The aluminum oxide reacts with carbon to produce useful metallic aluminum and carbon monoxide (Phinney et al., 1977). The thermodynamics of this process requires that the processing vessel be maintained at 2400 K. High-temperature condensates such as SiC, Al_4C_3, and Al_4O_4C are present, along with the gases Al_2O, SiO, Al, and Si. These are likely to prevent the key reactions from achieving equilibrium (Waldron et al., 1979).

In the carbochlorination process, titanium, iron, and aluminum are refined from anorthite and ilmenite by reaction with carbon and chlorine (Rao et al., 1979). This process does not require high reaction temperatures. However, chlorine recycling involves very massive equipment (Waldron et al., 1979).

Electrowinning of aluminum from anorthite powder dissolved in a mixture of alkaline earth chlorides at 75 K has been considered (Criswell (Das et al.), 1980). This approach requires only a moderate amount of energy.

Iron and titanium can be refined from ilmenite by treatment in molten NaOH (Rao et al., 1979). TiO_2 is soluble in NaOH, unlike Fe_2O_3, and thus the two compounds can be separated and refined. High temperatures (1000–1300 K) are necessary for this process.

Lunar soil may be broken down into its elemental constituents by the HF leaching technique (Waldron et al., 1979). This process begins with the dissolution of lunar soil in a heated HF solution, followed by a series of steps including ammonium salts fusion, silicon hydrolysis, metal oxide production, acid recovery, fluoride hydrolysis, ion exchange and platable-metals separations, precipitation and crystallization, and metal oxide reduction.

Most of the reagents used in the above processes are rare on the Moon compared to the known average lunar composition. Thus, recycling and leakage must be regarded as critical problems. Thermal dissipation is another major problem because many techniques involve exothermic reactions which generate heat that is difficult to dispose of due to the unavailability of direct conductive cooling in space. HF acid leaching appears to be the most promising for interim processing and short-term growth of the SMF. More (valuable) elements can be extracted in this way than any other process studied to date. However, while the HF process appears quite efficient there are several potential pitfalls associated with the deployment of an acid leach system. HF usually is stored in polymer containers because it dissolves most metals and all silicates. Such polymers cannot easily be derived from lunar soil. Containerless reaction technology cannot be employed because of the sublimation problem. Possibly etch-resistant solid silane containers could be developed, but these would have to be maintained at 75 K or colder, resulting in prohibitively sluggish reaction rates. Yet another potential problem is leakage. The numerous steps involved in the HF acid technique significantly increase the likelihood of accidental loss of vital process fluids.

It is important that the reagents, plumbing, and containment vessels for the chemical processing plant eventually be produced from nonterrestrial materials – importation of these commodities is not feasible if the long-term growth rate is to be exponential. As to the first of these necessities, calculations by Freitas (1980b), based on an HF leach factory module capable of processing roughly 4000 t/yr of lunar soil, indicate that sufficient hydrogen and fluorine can be produced to allow replication of the required reagents. The calculations assumed 95% recovery of hydrogen and 50% recovery of fluorine due to leakage, which may be too optimistic. On the other hand, these limitations may be offset by discoveries of richer sources of hydrogen (e.g., Arnold, 1980) and fluorine on the Moon or by changes in physical-to-chemical processing ratios. It appears that at least short-term growth of SMF capability is possible with the use of HF acid leach extraction. The remaining problems of producing plumbing and containment vessels from nonterrestrial materials appear insoluble at present; however, importation of polymeric plumbing and make-up reagents is feasible for short-term growth.

The methods discussed above are well-suited to short-term nonexponential SMF growth. Table 4.12 summarizes the recommendations of a recent workshop on silicate and other lunar-like minerals processing (Criswell, personal communication, 1980). New processing methods which do not require aqueous solutions or reagents composed of rare nonterrestrial elements might help to achieve a long-term self-sufficient, exponentially growing SMF (Grodzka, 1977). Possible new avenues of research may include silicon- and oxygen-based processes, advanced zone refining or fractionation techniques, induced immiscibility in melts, and rapid controlled-crystal-nucleation methods.

Electrophoretic processing. An important initial step in the generation of new processing options for dry, granular materials found on the Moon is the development of an effective mineral separation or primary beneficiation process. If the primary materials of interest for a particular refined product (such as lunar anorthite plagioclase for aluminum and silica) can be isolated, then the problem of developing a self-sufficient chemical beneficiation process is far less difficult (Rao et al., 1979).

Every chemical processing option for beneficiating lunar soil suggested to date requires chemicals that are relatively scarce on the Moon. Some of these options may demand high levels of automation not presently available. It is therefore desirable to develop new processing options that can be expanded with little or no importation of terrestrial materials and that are either self-automated or automation-compatible. A promising new primary beneficiation technology opportunity appears to be electrophoretic separation, a one-step, self-automatable technique (Dunning and Snyder, 1981).

Electrophoresis is defined as the transport of electrically charged particles in a direct current electric field (Bier, 1973). The movement occurs as a result of the electrostatic potential between the layer of ions adsorbed from the suspension medium onto the surface of particles and the bulk suspension medium. The layer of adsorbed ions is called the "Helmholtz double layer" or the "electrical double layer." It consists of the potential determining layer (the surface of the particulate material), the Stern layer (the layer of adsorbed ions from the atmosphere), and the Guoy layer (the bulk fluid) (Bier, 1973; Jungerman, 1970). The electrophoretic potential is defined as the electrostatic potential between the Stern layer and the bulk fluid. If the electrophoretic potential is positive or negative, a particle moves towards one of the electrodes in the system. The direction of movement depends on the relative charge signs of the particle and the electrode, and the velocity is a function of the magnitude of the electrophoretic potential. If the potential of a particle is zero (the isoelectric point), particles remain stationary and suspended. Electrophoretic separation depends on differential migration rates for particles in the bulk suspension medium (although electrode-reaction electrophoresis is employed for electroplating). The major requirement for successful beneficiation is that the particulate matter be sufficiently fine-grained to remain suspended in the bulk medium. The ideal grain size for geologic materials is 25–60 μm (Westwood, 1974).

Electrophoresis has been used by physiologists and biologists since the 1930's as a tool for separation and identification of enzymes, proteins, lipids and blood cells. Tests were performed on blood cells during the Skylab and Apollo-Soyuz experiments with good success (Henderson and Vickery, 1976; Schoen et al., 1977), and the electrophoretic phenomenon has been utilized as a terrestrial separation technique for clays and limestones.

Of the numerous electrophoresis technologies only a few are suitable for geologic materials. One technique – high-voltage zone electrophoresis – is particularly well-suited to lunar soil separation because it is a one-step, self-automated separation method. Typically, a tank is filled with suspension medium into which two electrodes are inserted. Filter paper is mounted on both electrodes. When an electric field is applied, mineral particles move toward the filter paper and are trapped in various positions along its length. Each mineral phase migrates to a discrete area depending on the magnitude and sign of the electrophoretic mobility. These phases then may be removed in a single, simple automated step.

Lunar soil is ideally suited to electrophoretic separation. Average grain size is 40 μm (Williams and Jadwick, 1980), well within the optimal range cited earlier for geologic materials. This grain size distribution is also very poorly

TABLE 4.12.– RESEARCH DIRECTIONS FOR THE DEVELOPMENT OF NEW PROCESSING TECHNOLOGIES FOR UTILIZATION OF LUNAR AND SILICATE MINERALS
(Criswell, 1979)

1. Physical separations:
   - Verify degrees and rates of physical separabilities of distinctive components (major minerals, free-iron grains, amorphous combinations) by direct and combined means (magnetic, electrostatic, sieving, crushing, vibrations, electrophoretic, etc.). Use analog materials and very limited quantities of lunar samples.
2. Glass and ceramics:
   - Apply the extensively developed technologies and basic materials knowledge of terrestrial glasses and ceramics to determine the products and production characteristics for the direct and early use on the Moon and in space of bulk lunar soils, physical separates (mineral, vitreous and metallic), and chemical separates of the soils.
   - Verify the indicated degree and rate of recovery of gases from lunar soils which will be released by heating in melting operations and by means of low-energy desorption processes (extreme oxidizing and reducing conditions at low gas pressures).
3. Chemical processing:
   - Demonstrate the electrorefining and alloying of metallic "free" iron.
   - Demonstrate with simulated lunar soils on the bench-scale level the HF acid leach, ammonium salt fusion, and mixed acid leaching based on adaptations of well-known terrestrial industrial and laboratory procedures for extracting major oxides and elements (O, Si, Al, Mg, Ti, Ca, Fe) from a wide range of bulk lunar soils. Rates of throughput, recycle efficiencies, and separability data should be determined in these demonstration experiments. Implications of reagent composition from native lunar materials should be determined.
   - Recycle chemistry: Investigation of alternative methods of salt splitting or recycling acids and fluorides.
     Topics: Pyrolysis of NH_4F. Conversion of metal fluorides to compounds more readily pyrolyzed – sulfites, formates, oxalates, etc. Conversion to hydroxides with NH_3. Conversion of NaF (from sodium reduction) to Na, HF, and O_2 via NaOH and Castner cell, or from fused fluorides using consumable anodes.
   - Literature studies of methods to recover minor and trace element fractions obtainable from immiscible liquid extraction of magmas (molten fluids) such as would occur in glass production.
4. Electrochemical processing: Investigation of direct high-temperature electrolysis of silicates or other semi-refractory source materials, either as molten systems or dissolved in high-temperature fused salt systems such as fluorides or carbonates.
   Topics: A. Science – Solubility and miscibility limits in specific systems. Distribution coefficients between magmatic and fused salt phases where liquid immiscibility exists. Potentiometric studies of specific elements in molten, fluoride and carbonate systems.
   B. Engineering – Preliminary economic and engineering feasibility studies. Cell materials compatibility studies for magmatic, fluoride and carbonate systems, including container and anode materials. Special emphasis to be directed to finding nonconsumable electrodes.
   C. Establishment of kg-scale electrochemical feasibility tests for molten silicate and fused salt (fluoride and carbonate) systems.

   Systems analyses and operations tests:
   - Examine economic attractiveness of the manufacturing of machines of production (including materials processing devices) and products in a minimum-mass facility using native lunar iron, glass, ceramics, and derived products. Facility should be based on current state-of-the-art semi-automatic numerical production and remote monitoring.
   - Theoretically examine the use of silane-based fuels for use in Moon-Earth liquid-fueled transfer rockets. Determine whether lunar hydrogen can be obtained in sufficient quantities to transport Moon materials back to Low-Earth Orbit, significantly reduce Earth-lift requirements of propellants, and provide feedstock in LEO for materials industries.
   - Examine construction of large-volume sublunar living and manufacturing chambers by melting of the lunar soil into self-sealed lava tubes.

suited to conventional mineral separation techniques involving electrostatic or electromagnetic (cf. Inculet and Criswell, 1979), flotation, or density characteristics. The low gravity of the Moon and the absence of gravity in space should be extremely beneficial to the electrophoresis process because settling is either minimal or nonexistent (Henderson and Vickery, 1976; McCreight, 1977; Saville and Ostrach, 1978; Vanherhoff and Micale, 1976; Weiss et al., 1979). Electrophoretic separation of minerals is only moderately temperature-dependent, thus eliminating another source of potential difficulty (Bier, 1978). Finally, the isoelectric points of lunar minerals have enough variation to ensure extremely efficient separation. A few of these values are tabulated in table 4.13.

Suspension media options are a major research area in the development of lunar electrophoretic separation technology. Aqueous solutions commonly are used for bulk suspension due to the availability and ionization potential of water. For this reason, isoelectric points customarily are defined in terms of aqueous pH. Carbon tetrachloride also has been used as a high-voltage zone electrophoresis medium. Aqueous and carbon tetrachloride suspensions may be impractical for lunar separation facilities because of the relative scarcity of carbon, hydrogen, and chlorine on the Moon. Further, leaks in the system would be devastating if all major reagents must be imported. Some means must be found to thoroughly dry the output stream and to return these fluids to the bath. Alternative bulk media derived wholly from lunar materials might possibly be devised; for instance, silane or low-temperature basalt slag suspension fluids. The problem is hardly trivial, though it appears to present no fundamental insurmountable technological barriers.

Using high-voltage zone electrophoresis, only one medium is needed for a wide range of minerals. Other techniques require the ionic concentration of the operating fluid to be varied to match the isoelectric point (expressed in activity or concentration of a particular ion analogous to aqueous pH) of the desired mineral for each electrophoresis cell. This seems an unnecessary complication.

Other problem areas include fused mineral grains and iron coatings. Fused mineral grains, which are relatively common in lunar soil (10-20% by volume, Criswell, personal communication, 1980), are not amenable to electrophoretic separation because the isoelectric points are ill-defined. This may actually be beneficial since only pure mineral grains will be separated, thus eliminating the need for additional more complicated separation techniques. Iron coatings on mineral grains caused by "sputtering" also may be present in lunar soil. If coatings are thicker than about 30 nm, efficiency of the electrophoretic process decreases. Fortunately, the very existence of these coatings is open to some question, and there is no evidence at present that they are thicker than 10 nm. Also, if the coatings do not entirely cover the grain surfaces the problem of lessened electrophoretic activity is significantly reduced.

Electrophoretic separation appears highly adaptable to automation. The process itself is largely self-regulating and the collection of separated minerals appears to be a trivial robotics task. An automated biological electrophoresis system already has been designed and is under construction (Bartels and Bier, 1977).

An automated high-voltage zone electrophoretic separation system for lunar materials might require a large tank with two electrodes and filter paper (perhaps comprised of spun basalt fibers) suspended between them. The tank would be filled with some liquid medium closely matching the isoelectric point of a particular mineral of interest. After insertion of lunar soil a direct current electric field is applied to initiate separation. Grains of the mineral whose isoelectric point has been selected plate out near the center of the paper, the other minerals in discrete bands nearby.

TABLE 4.13.– AQUEOUS ISOELECTRIC POINTS OF LUNAR MINERALS

Mineral	Aqueous isoelectric point (pH)	Source
Spinel ($MgAl_2O_4$)	9.1	Bloom and Gutmann, 1977
Hydroxyapatite ($Ca_5(PO_4)_3OH$)	7	Bloom and Gutmann, 1977
Fluorapatite ($Ca_5(PO_4)_3(FOH)$)	6	Bloom and Gutmann, 1977
Rutile (TiO_2)	5.8	Bloom and Gutmann, 1977
Fayalite (Fe_2SiO_4)	5.7	Feurstenav and Raghaven, 1978
Olivine ($(Mg\ FE)_2SiO_4$)	5.7	Feurstenav and Raghaven, 1978
Hematite (Fe_2O_3)	4.8	Bloom and Gutmann, 1977
Forsterite (Mg_2SiO_4)	4.1	Feurstenav and Raghaven, 1978
Clinopyroxene ($Ca, Na, Mg, Fe_2, Mn, Fe_3, Al, Ti(Si\ Al)_2O_6$)	2.7	Feurstenav and Raghaven, 1978
Anorthite ($Ca(Al_2Si_2O_8)$)	2.4	Feurstenav and Raghaven, 1978
Albite ($Na(Al\ Si_3O_8)$)	1.9	Feurstenav and Raghaven, 1978

Individual mineral species are then extracted by robot scoops as the filter paper rolls continuously through the tank.

The proposed automated mineral separator consists of an input port, a suspension tank, two electrode cells, a bond of basalt fiber filter paper, a spectral scanner calibration unit, robot extraction scoops, and repository bins. These components are illustrated in figure 4.1. The sequence of automated operations, as suggested by figure 4.2, is roughly as follows:

(1) Lunar soil is introduced via the input port into the suspension tank.

(2) Lunar soil goes into suspension and begins to separate and move towards the electrodes.

(3) Individual mineral species move towards the electrodes along paths and with velocities which are a function of their electrophoretic potential.

(4) Various mineral species are trapped and plated onto a bond of filter paper continuously rolled through the suspension tank. The paper is connected to both electrode cells. Each mineral phase plates out in a unique area which is a function of the electrophoretic potential of that phase, resulting in discrete bands of pure minerals arranged across the filter paper.

(5) The paper is rolled through the extraction module where the width and composition of each band of trapped grains are measured and verified by a spectral scanner and vision module. Robot scrapers remove individual mineral phases and deposit them in receptacles.

The suspension, mobility, separation, and plating or entrapment steps in this process are self-regulating. The only steps requiring new automation are input, calibration, and extraction. The separator most probably can be scaled up to the requisite size for any given throughput rate, as present-day electrophoresis cells vary a great deal in capacity. The ratio of the volume of suspension medium to the volume of suspended soil can be as high as 1:1 (Micromoretics, Inc., personal communication, 1980).

Metallurgy of basalt. The occurrence of large quantities of tholeiitic (olivine-poor) basalt on the Moon has focused attention on its "metallurgy" (Kopecky and Voldan, 1965; Kopecky, 1971) and on its possible uses as a material for SMF construction. Early work in France involved substituting melted basalt for glass and was not directed toward improving the product over the raw material. German researchers advanced another step by evolving a technology

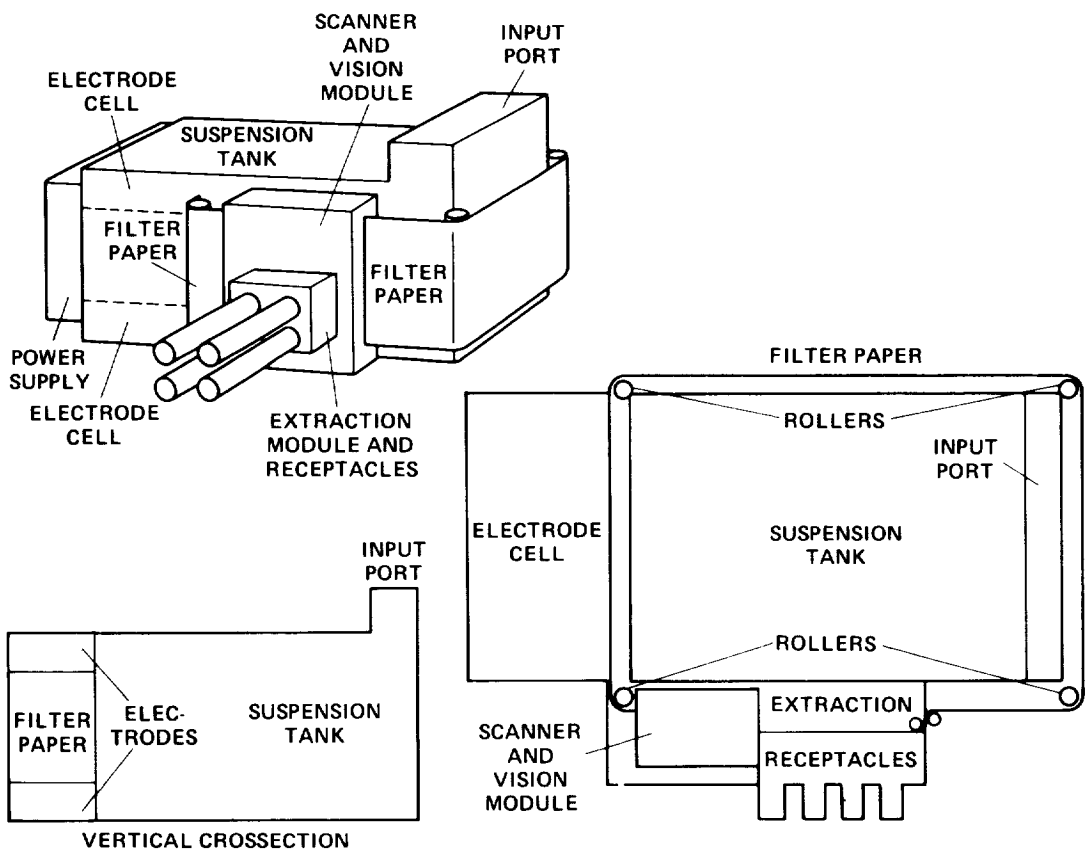

Figure 4.1.-- Components of the proposed automated electrophoretic lunar materials separator.

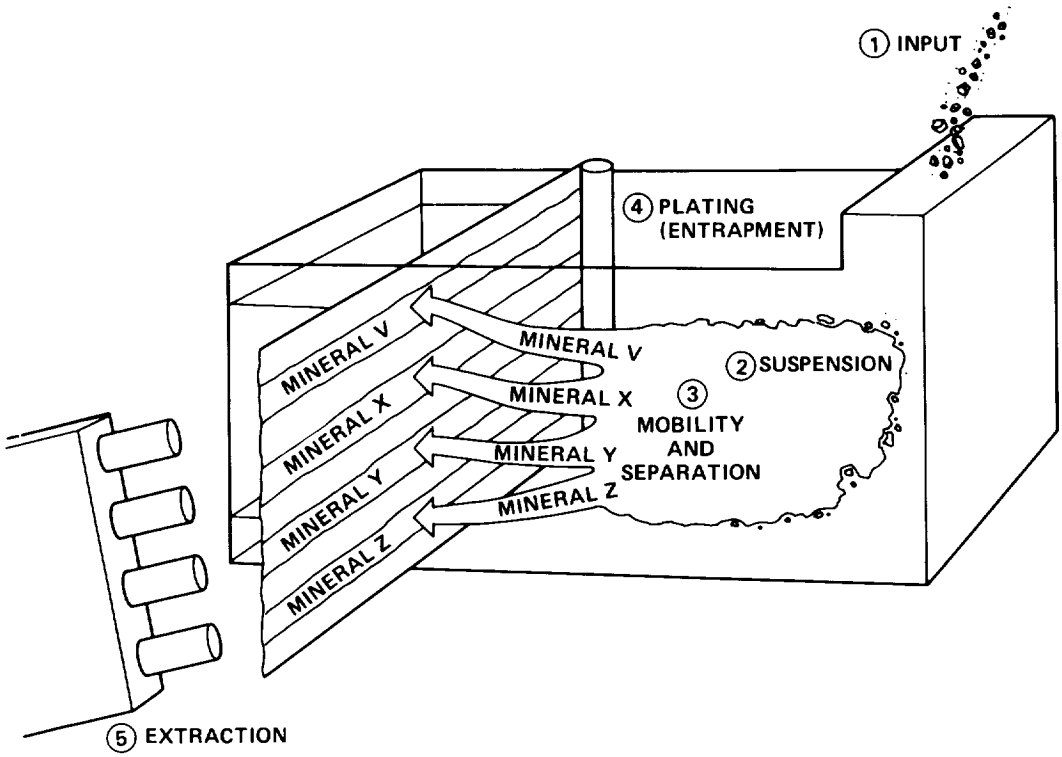

Fgiure 4.2.– Sequence of operations in the proposed electrophoretic lunar materials separator.

for recrystallizing the melt and casting it into simple shapes. The Soviet Union began experimentation with basalt in the 1930s at the Moscow Rock Foundry Works. Processed basalt currently is being manufactured either on a pilot or factory scale in Czechoslovakia, Poland, Sweden, Italy, and the United States. Czechoslovak Ceramics distributes its products mostly to Sweden and England (see fig. 4.3). Many basic patents are held by Mr. H. L. Watson of the now-dissolved Compagnie Generale du Basalte in France.

From laboratory studies and operational experience, raw feedstock basalt should contain pyroxene ($(Ca,Mg,Fe)SiO_3$) in excess of 60%, as it imparts desirable qualities (such as resistance to abrasion, mechanical strength, and chemical resistivity) to the recrystallized mass. Magnetite (Fe_3O_4) and olivine ($(Mg,Fe)_2SiO_4$) also are important because they induce crystallization, but their concentration should not exceed 10%. Higher fractions would reduce the SiO_2 content, leading to the formation of larger crystals that promotes bursting on annealing. (Also olivine, which has a high melting point and thus is difficult to melt, would not dissolve in the short time available for fusion, especially if present as large crystals.) Feldspars ($(Ca,Na)Al_2Si_2O_8$) influence the viscosity and regulate the rate of crystallization. Nepheline ($NaAlSiO_4$) and plagioclase feldspars should be present within the ratios 1:1 to 1:3, with a total content of about 20%. Other rock types such as melaphyres (alkali feldspars) and tephroites (Mn_2SiO_4) have been investigated (Kopecky and Voldan, 1965), but technological difficulties prevent their exploitation at present.

In addition, the material must be fine-grained, homogeneous, unweathered, nonporphyritic, and uncontaminated. A melting temperature range of 1500–1600 K must be associated with a relatively low viscosity (100–1000 poises) in order to cast well. The casts should recrystallize easily in a fine-grained state and not crack after cooling. Favorable factors for lunar basalt include the uncontaminated, unweathered nature of the material as well as an extraordinarily low viscosity.

However, little work has been done to assess certain other factors which might affect lunar basalt casting. For instance, in the manufacture of cast and sintered basalt different successions of minerals crystallize out depending upon the rate of cooling of the melt. By slow cooling and annealing of the casts the following succession is observed: magnetite, olivine, monoclinic pyroxene, plagioclase, then monoclinic amphibole. With rapid chilling, involved in the sintering process, the succession is: magnetite, pyroxenes, amphibole, olivine, and finally plagioclase. Inasmuch as crystallization of the castings depends on melt viscosity, control of that viscosity determines the quality of the final product. Turbulent flow arising from very low viscosity enhances the production of crystals of unequal size and creates swirls in the finished coating, so silica may have to be added to increase the viscosity of thin lunar basaltic melts. On the other hand, excessively high viscosities produce an undesirable laminar structure. The optimum is defined by a Reynolds number of about 1000. On the Moon, reduced gravity should slightly improve the casting

Figure 4.3.– Cast basalt pipe used in coke transfer. (Courtesy of Czechoslovakia Ceramics, Inc., Prague.)

process by reducing the onset of turbulence for a given crystal size. Stokes' equation would apply to a higher value for the terminal velocity of particles, therefore, laminar flow on the Moon would persist at higher terminal velocities than on Earth. Perhaps the effect of gravitational separation of mineral phases often seen during melting, and the inhomogeneities produced in casting, would also be less apparent in lunar cast basalt.

The results of laboratory gradient melting studies by Kopecky and Voldan were applied to the manufacture of cast basalt. The low crystallization speed of plagioclase (3-10 min) prohibits the crystallization of this mineral and it persists as a residual glass phase. Other newly formed crystalline phases of the pilot plant closely resemble the gradient furnace products, except that the cast basalt minerals are more skeletal and dendritic. The most apparent feature in cast basalt is the zonality of the product, which is a function of the cooling rate.

In commercial manufacturing operations in Czechoslovakia, the raw material (8-15 mesh basalt) is melted at 1575-1625 K in vertical gas-fired Lehr furnaces, a process similar to open-hearth steel production. The molten material then is conducted into a homogenizer drum where, at carefully controlled and slightly reduced temperatures, the melt begins to crystallize. The subsequent casting is similar to conventional metallurgical techniques except for differences imposed by the greater viscosity and cooling rates. Static casting in the sand molds originally employed produced a product having rough surfaces and poor tolerances. Metal molds (fig. 4.4) have now replaced sand molds and currently are used in the production of tiles, plates, and fittings. Recently, centrifugal casting methods (fig. 4.5) have resulted in a product of superior quality. Annealing furnaces (fig. 4.6) are used to cool the castings from 1100 K to room temperature over a 24-hour period. Careful control of temperature reduction is required to prevent bursting and other imperfections on annealing.

Most of the castings weigh 3-80 kg. The largest, representing the limits of present-day equipment, weighs 300 kg; the smallest is 0.34 kg, a 60-mm diameter ball. Tiles usually are made in thicknesses of 25-40 mm; pipe walls typically are 15-20 mm thick, with a maximum of 50 mm. The lower limit of thickness is determined by the rate of heat loss and the danger of vitreous solidification. Research is needed on the effects of reduced gravity and on the maximum mass of various castings.

The sintering process is similar to that employed in powder metallurgy (see sec. 4.3.1). The basalt frit made from molten metal is finely ground (1600 mesh), impregnated with a plasticizer, shaped under a pressure of 1000 kg/cm^2, then sintered in electric furnaces at 1395-1415 K. Sintered basalt is valuable in the manufacture of small articles such as nozzles, wire-drawing dies, spheres, and other special fabrications.

Basalt fibers for industrial and commercial applications also currently are produced overseas. Basalt fiber research

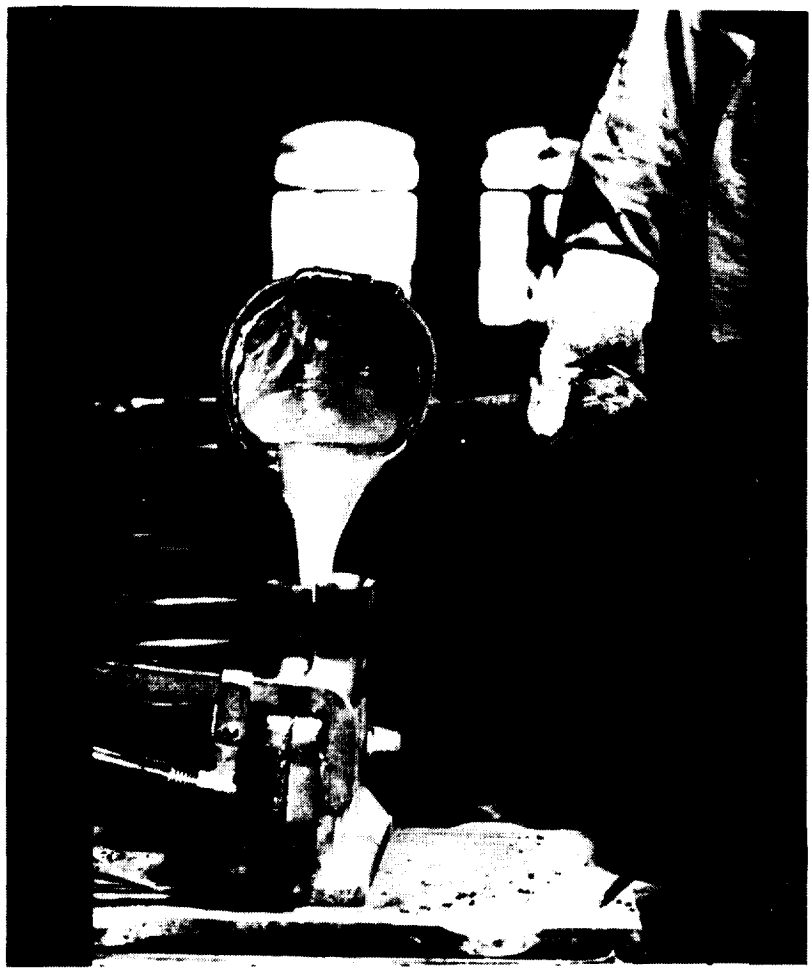

Figure 4.4.– Ladling of molten basalt into metal molds. (Courtesy of Czechoslovakia Ceramics, Inc., Prague.)

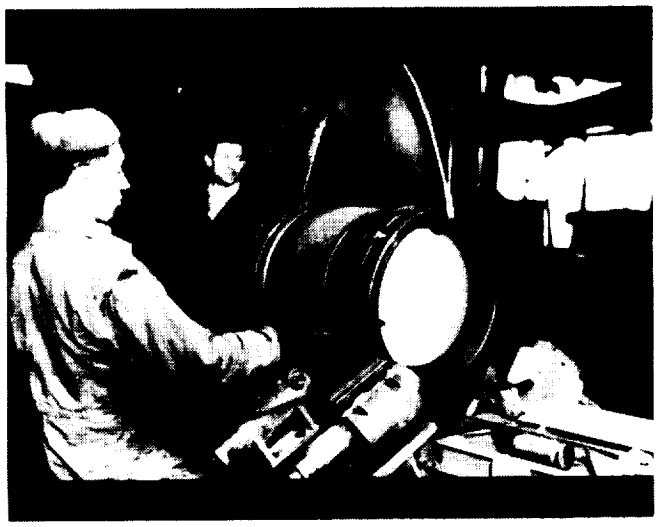

Figure 4.5.– Centrifugal casting of basalt. (Courtesy of Czechoslovakia Ceramics, Inc., Prague.)

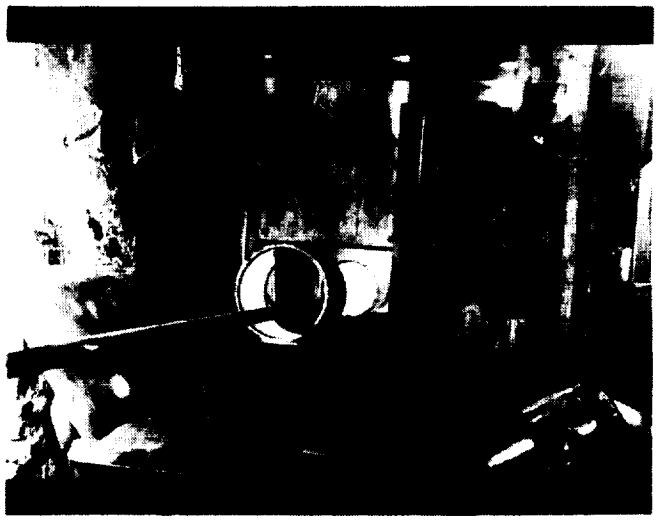

Figure 4.6.– Basalt casting removed from centrifugal casting drum and positioned for placement into annealing oven. (Courtesy of Czechoslovakia Ceramics, Inc., Prague.)

TABLE 4.14.– CHEMICAL COMPOSITION AND STRENGTHS OF FIBERS FROM BASALTS OBTAINED FROM VARIOUS LOCATIONS

Sample number, rock flow, source	X-6, Lolo Flow, Whitman County, WA	RC-11. Imnaha, Rocky Canyon, ID	K-9068, Elephant Mt., Saddle Mt., WA	K-9064, Middle Yakima, Saddle Mt., WA	O-2, Sweet Home, OR	K9048, Pomona, Saddle Mt., WA	RC-3, Imnaha, Rocky Canyon, ID	K-9017, Lower Yakima, Saddle Mt., WA	BCR-P, Yakima Flow	E-glass Owens-Corning
Analysis, %										
SiO_2	49.10	49.41	50.02	50.49	50.50	50.86	51.41	53.61	54.50	52.20
Al_2O_3	13.80	17.92	13.29	13.62	16.00	15.18	15.14	15.14	13.60	14.80
TiO_2	3.16	2.41	3.48	3.06	2.17	1.69	2.22	1.84	2.20	0.00
Fe_2O_3	2.00	2.00	2.00	2.00	---	2.00	2.00	2.00	2.00	.30
FeO	11.98	9.66	13.27	12.62	13.80	9.21	11.32	9.60	10.50	.00
MnO	.21	.17	.21	.22	---	.19	.21	.18	.18	.00
CaO	9.43	9.06	8.59	8.48	10.00	10.62	9.33	8.43	6.92	18.70
MgO	5.25	5.64	4.28	4.45	4.30	6.49	5.05	4.98	3.46	3.30
K_2O	1.26	.81	1.35	1.54	.35	.80	.68	1.14	1.70	.00
Na_2O	3.09	2.57	2.95	2.93	3.20	2.62	2.28	2.73	3.27	.30
P_2O_5	.68	.35	.55	.58	---	.33	.36	.35	.36	.20
B_2O_3	.00	.00	.00	.00	.00	.00	.00	.00	.00	10.20
Temperature of drawing, °C	1325	1300[a]	1250	1250	1250	1250	1250	1250	1360[a]	1250[a]
Speed of drum, rpm	515	250	370	515	370	250	370	515	250	250
Number of samples	40	29	30	18	25	20	20	20	31	23
Average diameter of fiber, μ	13.0	12.2	13.5	9.0	11.4	11.8	11.3	10.2	12.1	12.2
Average tensile strength,										
GPa	1.97	1.99	2.13	2.23	2.08	2.08	2.25	2.45	1.97	2.52
psi	286,000	288,000	309,000	323,000	302,000	301,000	326,000	355,000	285,000	365,000
Young's Modulus,										
GPa	82.76	77.93	77.93	87.59	90.34	82.76	87.59	87.59	71.03	81.38
Millions psi	12.0	11.3	11.3	12.7	13.1	12.0	12.7	12.7	10.3	11.8

[a]Air jet used.

(Subramanian et al., 1976)

programs and demonstration units have been implemented at Washington State University (Subramanian et al., 1975, 1976, 1977, 1978, 1979) and at the University of California at Los Angeles (Mackenzie and Claridge, 1979). Production methods for spinning basalt include: (1) continuous fiber simple extrusion and reeling, similar to standard glass fiber production (Andreevskaya and Plisko, 1963), and (2) staple fiber extrusion augmented by air or steam jets including centrifugal spinning methods (Dubovkaya and Kosmina, 1968). Both methods warrant further research for robotics applications and automated manufacturing (Kato et al., 1978) in lunar environments. The typical composition of spun basalt (in wt %) is represented by SiO_2 (50%), Al_2O_3 (15%), TiO_2 (3%), FeO (11%), Fe_2O_3 (2%), MnO (0.2%), CaO (9%), MgO (5%), K_2O (1%), Na_2O (3%), and P_2O_5 (1%). The fibers are brown in color because of their iron content. Table 4.14 provides a list of compositions of raw feedstock and other fiber characteristics. Tensile strengths are comparable to those of E-glass.

Both continuous and staple fibers can be made from basalt. Continuous fibers are produced using standard glass fiber production equipment. After the feedstock is fused in an electric furnace, the melt is fed to electrically heated platinum-rhodium bushings containing 200-300 perforations. As shown in figure 4.7 (Subramanian et al., 1975), a drum winding pulls the fibers from the platinum-rhodium bushing perforations. Fiber diameter is a function of melt temperature and drum or centrifugal nozzle speed. Temperatures range from 1525-1675 K; thread diameters usually are in the 10-15 μm range, although superfine fibers 0.2-4.0 μm thick reportedly have been manufactured in Russia.

Staple fibers are produced using melting tank furnaces that feed electrically heated centrifugally spun platinum-rhodium bushings. Jets of air or steam moving parallel to a fiber extruded from the centrifugally spun nozzles tear it into short lengths (about 30 mm) which fall onto a porous drum under vacuum. Either continuous or centrifugal spinning staple methods may be applicable for lunar fiber production.

Silanes (orgonosilicon compounds) have been evaluated as coating materials on basalt fibers to permit adhesion of the fibers to epoxy composites (Subramanian et al., 1976, 1979). The results showed that silane coupling agents are effective in improving interfacial bond strength in basalt fiber-polymer systems and that basalt fiber has excellent potential as a reinforcing fiber for polymer composites. The tensile strength and tensile elastic moduli of epoxy composites of silane-treated basalt fibers are presented in figures 4.8 and 4.9, respectively, as a function of volume fraction V_f.

Processed or machined basalt has been suggested as a logical construction material with which to produce the component parts of large space and lunar structures. The strength of this basalt and of other construction materials

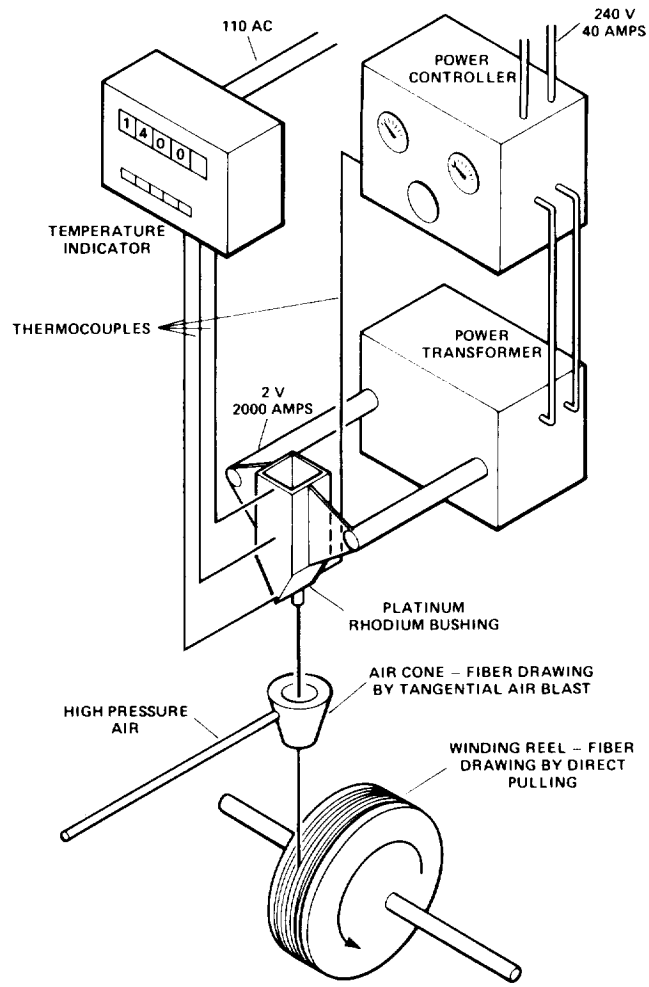

Figure 4.7.– Single fiber drawing equipment for basalt fiber production.

must be compared. In table 4.15 the proportional limit, ultimate strength, and modulus of elasticity of sintered basalt are measured against those of carbon steel, cast iron, malleable cast iron, wrought iron, cast aluminum, aluminum alloy 17ST, rolled brass, cast bronze, and drawn copper.

The physical properties of basalt compare quite favorably with those of conventional construction materials. The compressional strength and elastic modulus are quite high; that is, basalt as a construction material is far more rigid than other substances listed, a quality of some importance in large space structures. One drawback is tensile strength, roughly an order of magnitude lower for basalt than other typical construction materials. This problem can be overcome either by designing structures such that basalt components are not exposed to high tensile or extensional stress states or by producing a compound basalt reinforced with fibers. The first alternative is impractical, as large structures contrived to reduce tensile stresses on basalt components

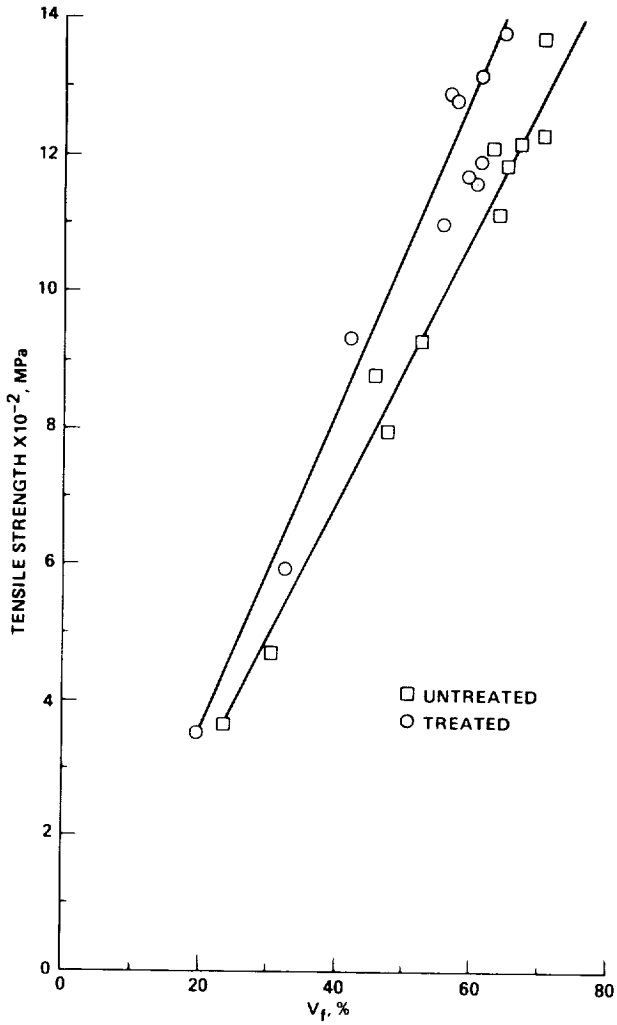

Figure 4.8.– Tensile strength of epoxy resin composite DGEBA reinforced by untreated and silane A-1100 treated basalt fibers.

would be difficult to design and of limited utility. Compound basalts could be prepared by sintering basalt-sodium flux materials and imbedding the melt with a cross-hatched pattern of basalt filaments to increase tensile and shear strength without sacrificing rigidity. (The sodium flux reduces the fusion point of the mixture so that the basalt filaments do not themselves melt.) Finally, the low thermal expansion coefficient (7.7×10^{-6}/K around room temperature) and thermal conductivity of sintered basalt (8×10^{-4} J/m^{2}sK) are very suitable for lunar application, enhancing the structural rigidity of sintered basalt.

One last potential problem is machinability. Cast basalt has a rather irregular surface, a property inappropriate for some construction components, and needs some surface and internal grinding. Also, the hardness of cast and sintered basalt is high, 8.5 on the Moh's scale. A grinding compound of higher hardness is therefore needed, preferably some substances found on the lunar surface. A logical choice is spinel (Moh's value 9.0), which probably can be extracted from lunar soil by an electrophoretic technique.

A summary of possible methods and applications of processed lunar basalt is presented in table 4.16.

4.2.3 Transport to Low Earth Orbit

In the near term two sources of raw materials may be tapped to supply a space processing center in LEO – the Earth itself and the Moon (see fig. 4.10). Earth may provide material, primarily feedstock, by way of the Shuttle and derived vehicles. The possibility of using a land-based electromagnetic accelerator for ground-to-LEO transport offers the tantalizing promise of greatly reduced supply costs for feedstock payloads able to withstand the 10^4-10^5 m/sec^2 accelerative loads required for direct launch from Earth (Mongeau *et al.*, 1981).

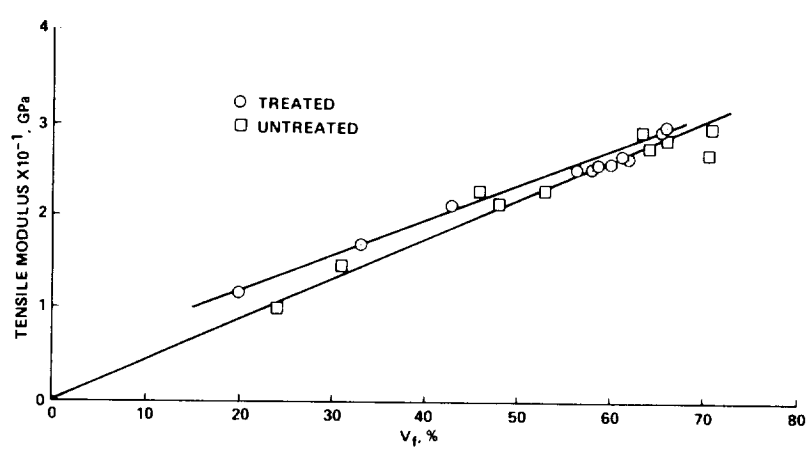

Figure 4.9.– Tensile modulus of epoxy resin composite (DGEBA) reinforced by untreated and silane A-1100 treated basalt fibers.

TABLE 4.15.– COMPARISON OF PHYSICAL PROPERTIES OF BASALT WITH OTHER BULK MATERIALS

Material	Proportional limit, MN/m^2			Ultimate Strength, MN/m^2			Modulus of elasticity, MN/m^2	Source
	Tension	Compression	Shear	Tension	Compression	Shear		
0.2% Carbon steel (hot rolled)	238	241	142	408	248	306	2.0×10^5	1961 AISC Manual
0.2 Carbon steel (cold rolled)	408	414	244	544	416	408	2.0×10^5	
0.8 Carbon steel (hot rolled)	476	491	286	816	503	714	2.0×10^5	
Cast iron	40.8	43.1	---	367	510	---	1.0×10^5	
Malleable cast iron	414	428	156	367	261	326	1.6×10^5	
Wrought iron	204	231	122	340	242	373	1.8×10^5	
Cast aluminum	61.2	74.0	---	88.4	76.1	---	6.7×10^4	
Aluminum alloy 17ST	217	223	143	381	242	218	4.1×10^4	
Rolled brass	170	179	102	374	186	327	5.0×10^4	
Cast bronze	136	140	---	224	381	---	3.3×10^4	
Drawn copper	258	272	156	374	284	---	5.1×10^4	
Sintered basalt	36	550	---	36	550	---	1.1×10^5	Kopecky and Voldan, 1965

Bock et al. (1979) have studied the retrieval of lunar materials to various points in space, using chemical rockets burning lunar LOX and aluminum powder or terrestrial H_2. The objective is to transport from the Moon to cislunar orbital space many times more mass than could be supplied from Earth at equal cost. A particularly appealing proposal for near-term acquisition of lunar resources using chemical propulsion has been suggested by Waldron *et al.* (1979). The potential fuel is lunar silicon and terrestrial hydrogen combined to form silanes, which then are burned as rocket fuel with lunar oxygen. Even if mass drivers supplant this use of lunar-derived propellants for bulk transport, the silane/LOX system, if feasible, would still be useful in trajectory correction (RCS), stationkeeping, and related specialized applications.

The costs and mechanics of STS launch and operations are treated extensively in the literature and will not be reviewed here. Two relatively new proposals – the lunar silane/LOX propellant scenario and the Earth-based electromagnetic catapult – are treated in more detail below. Calculations are presented for the total and net lunar mass that could be delivered to LEO in terms of multiples of the hydrogen needed from Earth.

Lunar supply of a LEO station. To demonstrate early net growth in space the team considered the problem of supplying a LEO station with bulk materials from the Moon. There will be only moderate initial supply from Earth and very limited resupply thereafter. A LEO facility able to accept raw lunar stock and a very small factory able to extract oxygen from and load lunar soil into arriving spacecraft for Moon-to-LEO transport are assumed already to exist. The initial supply base will likely be located at a previously visited Apollo site. A more sophisticated version of the lunar base produces both oxygen and silane (from lunar silicon and Earth-supplied hydrogen). The overall plan requires an Orbital Transfer Vehicle (OTV), a Lander, and a supply of hydrogen from Earth. OTV and Lander are fueled by terrestrial-supplied hydrogen and lunar-derived oxygen or by silane and lunar-derived oxygen. Lander is loaded with lunar soil to be processed and delivers it to the OTV. The OTV returns to the manufacturing facility in low Earth orbit. There, at the SMF, part of the soil is used to produce oxygen (or oxygen and silane) to refuel the OTV and Lander. The remainder is available as raw material for the manufacture of useful output. Either the H_2-O_2 or the SiH_4-O_2 combination allows significant multiplication of resource mass beyond that supplied from Earth.

This scenario could be accomplished according to the following sequence:

(1) The OTV carrying Lander and the required hydrogen leaves LEO with impulse ΔV_1 m/sec.

TABLE 4.16.– LUNAR FACTORY APPLICATIONS OF PROCESSED BASALT

Cast basalt	Sintered basalt	Spun basalt (fibers)
Machine base supports (lathes, milling machines)	Nozzles	Cloth and bedding
Furnace lining for resources extraction	Tubing	Resilient shock absorbing pads
Operations	Wire-drawing dies	Acoustic insulation
Large tool beds	Ball bearings	Thermal insulation
Crusher jaws	Wheels	Insulator for prevention of cold welding of metals
Pipes and conduits	Low torque fasteners	Filler in sintered "soil" cement
Conveyor material (pneumatic, hydraulic, sliding)	Studs	Fine springs
Linings for ball, tube or pug mills, flue ducts, ventilators, cyclers, drains, mixers, tanks, electrolyzers, and mineral dressing equipment	Furniture and utensils	Packing material
Tiles and bricks	Low load axles	Strainers or filters for industrial or agricultural use
Sidings	Scientific equipment, frames and yokes	Electrical insulation
Expendable ablative hull material (possibly composited with spun basalt)	Light tools	Ropes for cables (with coatings)
Track rails	Light duty containers and flasks for laboratory use	
"Railroad" ties	Pump housings	
Pylons	Filters/partial plugs	
Heavy duty containers for "agricultural" use		
Radar dish or mirror frames		
Thermal rods or heat pipes housings		
Supports and backing for solar collectors		

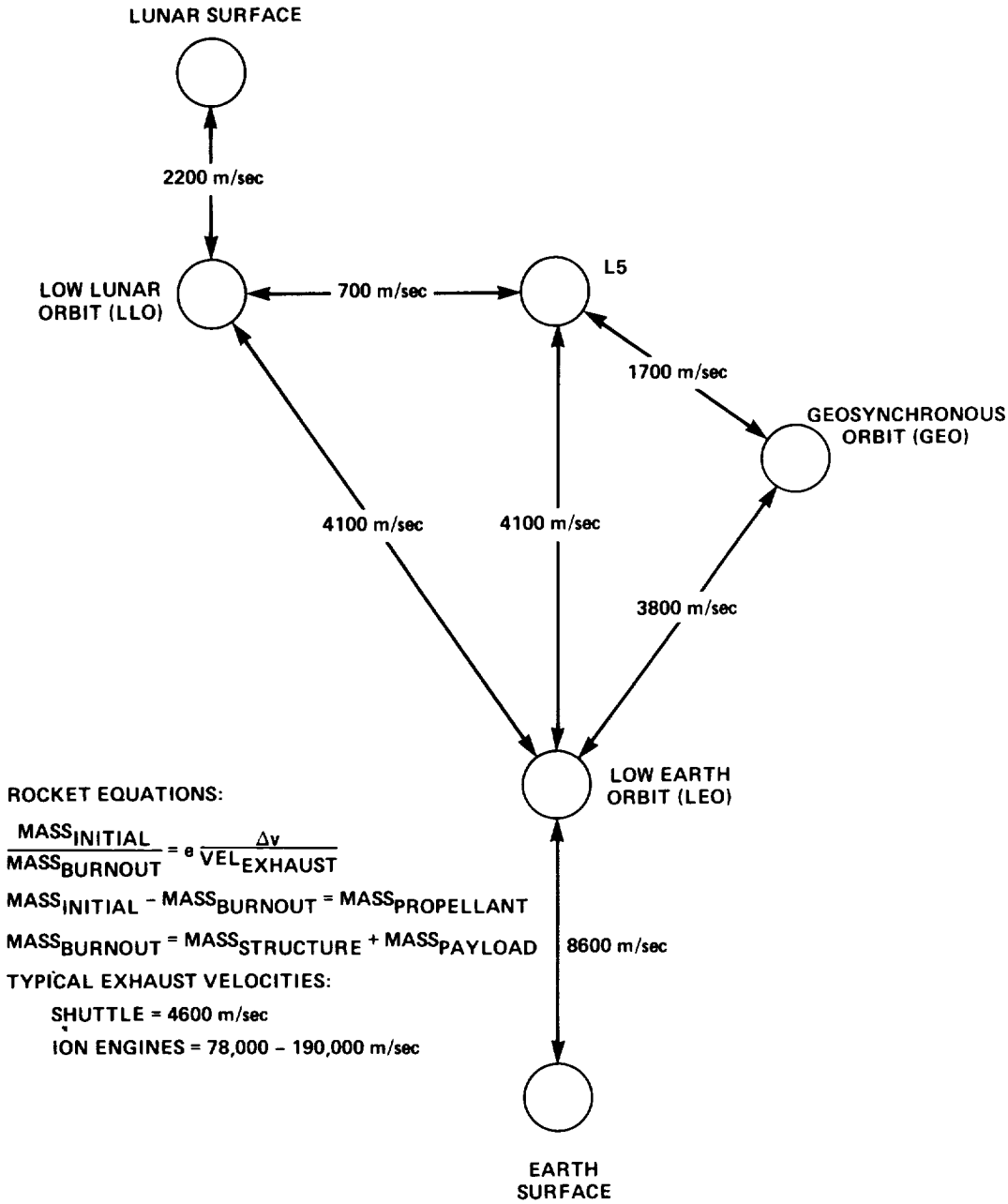

Figure 4.10.– Delta-V's for various orbital transfers.

(2) OTV passes low over the lunar surface (50 km altitude) and releases Lander, then returns to LEO on a free-return trajectory using aerobraking. No propulsion is assumed for any of these maneuvers.

(3) Lander burns fuel (ΔV_2 m/sec) to enter an elliptical lunar orbit with apolune at the point of separation and perilune at the surface of the Moon.

(4) Lander burns fuel (ΔV_3 m/sec) to land and rendezvous with the already emplaced lunar soil processor. Lander arrives carrying only the hydrogen required for a return to LEO.

(5) The lunar processor supplies Lander with native oxygen. If the silane alternative is used, the processor also takes Lander's hydrogen and converts it to silanes (predominantly SiH_4) using lunar silicon.

(6) Lander is loaded with a cargo of lunar soil destined for the LEO manufacturing facility.

(7) Lander lifts off from the Moon (ΔV_4 m/sec) and returns via aerobraking to LEO to rendezvous with the orbiting manufacturing facility.

(8) Lander and OTV are refueled for a return trip to the Moon.

The above procedure has been worked out parametrically without specifying the masses of OTV and Lander. The same fuel and oxidizer are used at each burn. It is desired to determine the incremental cost of one kilogram of lunar payload delivered to LEO which is not needed for fuel in terms of incremental mass lifted to LEO from the Earth. The full mathematical analysis is presented in appendix 4A – only the results are given here.

Let a be the tankage fraction needed to carry the payload from the Moon, B the propellant tankage fraction, and B_H the fraction of the total fuel-plus-oxidizer combination that is hydrogen. If X is as given in equation (2) of appendix 4A, and P is the mass of the payload not needed for propellant replenishment, then the mass of extra hydrogen that must be lifted from Earth to deliver 1 kg of extra lunar payload to LEO (dM_{Hlift}/dP) is given by equation (3) of appendix 4A. The following values are given for H_2-O_2 propellants:

- $c = 4.414$ km/sec ($I_{sp} = 450$ sec)
- $B_H = 1/9$
- $a = B = 0.038$
- $\Delta V_1 = 3.2244$ km/sec
- $\Delta V_2 = 0.84303$ km/sec
- $\Delta V_3 = 1.69147$ km/sec
- $\Delta V_4 = 2.51872$ km/sec
- $X = 0.39718$
- $dM_{Hlift}/dP = 0.2075$,

so the multiplier is $(0.2075)^{-1} = 4.82$ kg of extra payload gained for every kilogram lifted to LEO from Earth. For SiH_4-O_2 propellants:

- $c = 3.463$ km/sec ($I_{sp} = 353$ sec) $B_H = 1/24$
- $X = 0.49420$
- $dM_{Hlift}/dP = 0.12921$,

so the multiplier is 7.739 kg/kg.

If the OTV is eliminated and Lander alone leaves LEO and returns, then for H_2-O_2:

- $X = 0.39799$
- $dM_{Hlift}/dP = 0.20335$, so the multiplier is 4.92;

and for SiH_4-O_2:

- $X = 0.47696$
- $dM_{Hlift}/dP = 0.12395$, so the multiplier is 8.067.

The team concludes that significant multiplication of resources at LEO is attainable if part of the propellant required to run the system is drawn from the Moon. Lunar oxygen production allows 4.82 kg of raw material to be brought to LEO from the Moon for every kilogram of hydrogen lifted from Earth. If the OTV is removed, this multiplier factor rises to 4.92. Production of silanes as well as oxygen may allow 7.74 kg of raw material to be brought to LEO from the Moon for every kilogram of Earth-supplied hydrogen. If no OTV is used, this figure rises to 8.07. (Allowing Lander to complete the round trip without an orbital transfer vehicle increases performance slightly if the fuel for the first propulsive burn is stored in the space allotted to the payload on the return trip.) The foregoing parametric analysis indicates the advisability of continuing with this line of research. A very small initial plant on the Moon could permit the utilization of lunar materials in LEO early in space manufacturing experimentation.

Earth impulse launch supply of a LEO station. The use of launchers to propel material from the lunar surface has been a key element in space manufacturing and colony-building scenarios for many years (Grey, 1977). Even more revolutionary is the concept of an impulse launcher to lift cargo off the surface of the Earth (Mongeau et al., 1981). If payloads are of sufficient size and are projected almost vertically, atmospheric resistance reduces velocity by only about 15% (see Kolm in Grey, 1977). Since the launch must be nearly perpendicular to minimize atmospheric drag, it is not feasible to supply a LEO station directly. (About 7 km/sec of horizontal velocity would have to be added after launch, so there would be no advantage in using an impulse launcher.) But if payloads are lofted to geostationary altitude (GEO), a burn there of only 1.5 km/sec puts the cargo in an orbit tangential to the Earth's atmosphere. Aerobraking then lowers the apogee until a final burn circularizes the orbit and allows rendezvous with the LEO facility.

Although modern rockets are very thermally efficient, only about 0.5-1.0% of the energy originally available in the propellant tanks is finally delivered to the payload; the rest is expended accelerating propellants and vehicle mass. The impulse launcher is vastly more efficient, allowing all but about 3% of the energy required to reach LEO to be imparted to the payload while it is on the ground. The 3% expenditure is made by a booster fired at apogee to raise perigee to the upper levels of Earth's atmosphere.

Two methods of impulse launch have been proposed. The first is a simple version of the rail gun as shown in figure 4.11. It suffers from major inefficiencies (I^2R losses) but illustrates the principle. In this system, current flow through a plasma causes magnetic pressure to be exerted by the arc on the projected base. The second type of impulse launcher uses superconducting coils as suggested by von Tiesenhausen (personal communication, 1980) and Kolm (in Grey, 1979). For a given acceleration and final velocity, the second (induction motor) launcher is 2-3 times longer than the first, since payloads are hurled forward in a bucket and the bucket eventually must be decelerated. The projectile is a 1000 kg mass in the form of an ogive 1.1 m diam and 6.3 m long. The launcher operates at 300 kW average impact power and launches the payload at 11.05 km/sec.

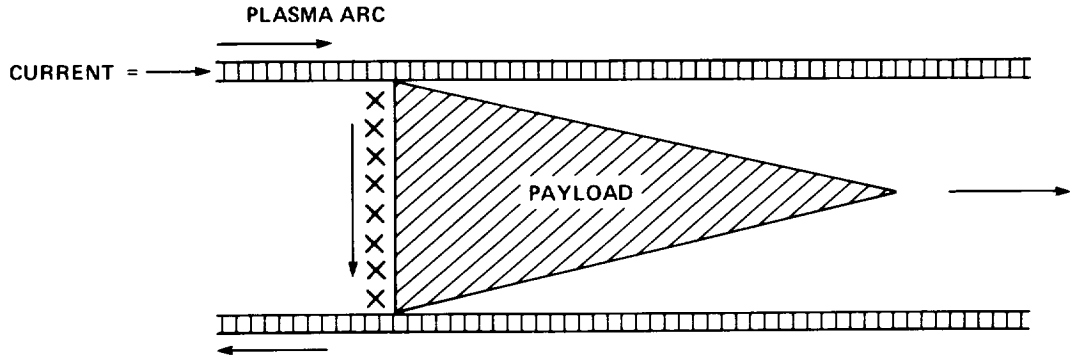

Figure 4.11.– Schematic of a rail-gun impulse launcher.

If 80% efficiency and power storage in homopolar generators between launches is assumed, one shot can take place every 3.5 min. The firing tube is about 1.5 km long for a 5000-g launch, or 2.5 km including bucket-slowing if the linear induction motor impulse device is employed. At 80% efficiency a launch requires 7.63×10^{10} J or 21,200 kW-hr of energy. Electricity costs about \$0.05/kW-hr, therefore the equivalent cost of an impulse launch in terms of power requirements is \$1060.

The projectile slows to 10.22 km/sec by 100 km altitude, the limit of the sensible atmosphere. Ten percent of the launch mass and 16.9% of the launch energy have been lost by this point due to ablation. When the projectile reaches GEO altitude it orients itself horizontally and the solid booster fires, providing a delta-V of about 1500 m/sec. This places the payload on an atmosphere-grazing trajectory allowing aerobraking and orbital circularization. If the solid booster (I_{sp} = 300) has an inert mass of 100 kg and the aerobraking shield is 25 kg, then the net mass delivered to LEO is:

$$(1000-100)\exp(-1500/9.8 \times 300) - (100 + 25) = 415 \text{ kg}$$

This represents a power cost of just \$2.55/kg. Even if the upper stage motor costs as much as \$100,000, the total expense to LEO is \$304/kg. If the cargo is launched around the Moon to obtain the requisite horizontal velocity by a gravitational assistance maneuver, the mass to LEO is (1000-100) - 25 = 875 kg and the cost of launch energy rises to about \$1100, or \$1.25/kg. Even if guidance and personnel requirements raise this figure by an order of magnitude it still is only 2% of the most optimistic estimate of expected Shuttle costs. The major savings for impulse launching occur because the usual need of accelerating large masses of propellants in addition to cargo is avoided.

4.3 Initial LEO "Starting Kit" Facilities

It seems clear that a wide range of industrially useful feedstocks can be economically provided for LEO and lunar utilization, using materials delivered first from low Earth orbit, later from the Moon, and ultimately from asteroidal and other resources. Sufficient knowledge of lunar materials exists to permit development and implementation of a variety of processing options; similar technology definition for asteroidal materials awaits more detailed information on specific bodies or the development of more generalized processing schemes appropriate to the space environment.

Approximately 10 man-years of research effort already have been devoted to lunar materials processing alternatives (Billingham *et al.*, 1979; Criswell, 1978, 1979; Waldron *et al.*, 1979) on the Moon and in space. The assembly of large structures in space from pre-formed parts has also received much study. Most of this work is reviewed in the MIT (Miller and Smith, 1979) and General Dynamics (Bock, 1979) studies on the manufacture of components for satellite solar power stations using lunar and terrestrial materials processed in factories deployed wholly from Earth.

Options available for manufacturing a wide range of machines or systems of production in space or on the Moon from locally available industrial feedstocks have received far less study. Virtually no effort has been directed toward answering the following questions: (1) What mass fraction of available and foreseeable machines of production can be produced in space from available materials, and (2) how might a hierarchy of production technologies be "grown" in space to create an ever-increasing variety of product and production options? Thus, the growth of industrial capacity can be partially or totally decoupled from terrestrial export of key processing resources.

A broad survey and analysis of a number of basic terrestrial manufacturing processes for their potential nonterrestrial applicability suggests several alternative starting kit scenarios, as described in section 4.3.1. Special attention is then given to "starting kits" in section 4.3.2. A "starting kit" is an initial space manufacturing unit of minimal mass and complexity which, given a supply of feedstock material, can produce second-generation tools (and some products) with which production capability may be gradually expanded further.

4.3.1 *Survey of Terrestrial Manufacturing Processes*

A survey of basic terrestrial manufacturing processes was accomplished by examining a representative sample of reviews of the field (Amstead *et al.*, 1979; Bolz, 1974; Campbell, 1961; DeGarmo, 1979; Lindberg, 1977; Moore and Kibbey, 1965; Schey, 1977; Yankee, 1979) and then generating from this "review of reviews" the taxonomy of approximately 220 manufacturing processes in table 4.17. A listing created in this manner is reasonably comprehensive, though probably not complete. Four major categories emerged: (1) casting and molding (powder metallurgy), (2) deformation (forming and shearing), (3) machining (milling, drilling, and lathing), and (4) joining.

The remainder of this Section consists of reviews and analyses of the processes in each of the four major categories that are potentially useful in space. All methods have been closely scrutinized with respect to a substantial fraction of the criteria listed in table 4.18. Many conventional techniques are rejected because they do not meet these unique requirements for space manufacturing. For instance, most standard machining operations are unsuitable due to the cold weld effect which occurs in a vacuum environment. Many joining techniques require prohibitively large quantities of imported consumables, and thus are inappropriate for a self-sustaining space industrial complex. Some casting and molding practices must be rejected since they require gravitational forces. Many deformation techniques are eliminated because of their tendency to produce inconvenient waste debris.

Casting, powder metallurgy, and plastics. Casting is a process in which melted fluid is introduced into a mold, allowed to cool to produce a solid product, and then this product is ejected. The primary limitation in terms of potential space utilization is the gravity required for all casting processes except permanent mold, centrifugal, die, and continuous casting. However, terrestrial gravity and atmosphere also create most of the major difficulties associated with these techniques on Earth. For example, liquid metals have a lower kinematic viscosity than water, and develop significant velocity by falling only a few centimeters. This condition creates turbulence, erosion of mold materials, and entrapment of air and mold gases. Manipulation of molten materials under controlled, low-gravity conditions and in vacuum may provide significant advantages (Adams, 1977).

There are two basic approaches to casting. The first, expendable mold casting, is the simplest process and the least likely to go wrong. However, gravity is necessary to feed fluid into the mold. It is not easy to replace gravity feed because expendable mold castings tend to be fragile; any type of pressure feed will likely damage the mold and ruin the final product. Another problem is that expendable molds draw heavily on inputs comparatively difficult to supply nonterrestrially. Some materials for temporary molds, such as sand in sand casting, can be recycled, but processes such as investment casting may require significant Earth inputs to remain viable space manufacturing alternatives.

Nonexpendable mold casting, on the other hand, relies less on the conditions of gravity and pressurized atmosphere. The molds tend to last for a greater number of runs. The main disadvantages are that (1) production devices tend to be large, on the order of tons, and (2) the processes are more complicated than for expendable mold casting. A more complete review of both methods from the standpoint of space applications may be found in appendix 4B.

The key problem appears to be mold/pattern preparation, the heart of the casting process. This problem provides an excellent focus for future artificial intelligence and robotics technology development efforts: A robot which can produce a mold/pattern to close tolerances is required (appendix 5F). Such manipulation might be initially performed via teleoperation, followed by a gradual evolution toward complete automation. Mold/pattern design is a fine art for which some type of expert system may be required for near-autonomous operation. The development of more precise robots with enhanced feedback and access to an expert system for casting technology should alleviate the mold production problem.

Casting processes have some definite advantages with respect to space applications. For instance, expendable mold casting is simple and nonexpendable mold casting requires no gravity. A potential solution to the gravity problem for expendable molds might be the generation of artificial gravity via centrifuge. Centrifuges are capable of applying great pressures, although force gradients inevitably will be present even in large rotating systems. Research is needed to identify and circumvent the difficulties of mold/pattern production in space.

Another casting/molding manufacturing technique is powder metallurgy. In this process, primary material is powdered and then placed in a suitable mold or extruded through a die to produce a weakly cohesive part. High pressures and temperatures then are applied to fuse powder particle contact points until a sufficient flow of material closes all pore spaces. Powder metallurgy can be conducted in a minimum facility able to produce an ever-widening range of increasingly complex parts and tools (Jones, 1960). A considerable theoretical and applications knowledge base already exists to help extend powder technologies into space (Bradbury, 1979).

Any material which can be melted can be powdered. Reformation does not necessarily require complete liquefaction, so the usual "phase rules" of melting may be ignored. The formation process thus has much greater flexibility than casting, extrusion forming, or forging. Controllable characteristics of products include mechanical, magnetic, porosity, aggregation, and alloying properties of metals and nonmetals. Many useful production options are

TABLE 4.17.– TAXONOMY OF MANUFACTURING PROCESSES

I. Casting and molding
- A. Casting
  1. Sand
  2. Plastic mold
  3. Shell mold
  4. Investment (lost wax, precision)
  5. Permanent mold
  6. Centrifugal
  7. Die
  8. Slush or slurry
  9. Full mold
  10. Low pressure
  11. Continuous
- B. Molding
  1. Powered metal
     - a. Compaction plus sintering
  2. Plastics
     - a. Injection
     - b. Compression
     - c. Transfer
     - d. Extrusion
     - e. Blow
     - f. Rotational
     - g. Thermoforming
     - h. Laminating
     - i. Expandable bead
     - j. Foam
     - k. Rotomolding
     - l. Thermoforming
     - m. Vacuum plug assist
     - n. Pressure plug assist
     - o. Matched mold

II. Deformation (forming and shearing)
- A. Forming
  1. Forging
     - a. Smith
     - b. Hammer
     - c. Drop
     - d. Press
     - e. Impact (see also extrusion)
     - f. Upset
     - g. No draft
     - h. High-energy-rate
     - i. Cored
     - j. Incremental
     - k. Powder
  2. Rolling
     - a. Shape
     - b. Ring
     - c. Transverse
     - d. Orbital
     - e. Cross-rolling
     - f. Thread
  3. Stretching (expanding)
  4. Drawing (shrinking) of wire bar or tube
     - a. Embossing
     - b. Coining
     - c. Stamping
     - d. Sizing
     - e. Redrawing
     - f. Bulging
     - g. Necking
     - h. Nosing
     - i. Ironing
  5. Deep drawing
  6. Swaging
  7. Extrusion
  8. Spinning
  9. Bending
  10. Miscellaneous other
     - a. Peening
     - b. Guerin process
     - c. Wheelon process
     - d. Magnetic pulse
     - e. Explosive
     - f. Electroforming
     - g. Staking
     - h. Seaming
     - i. Flanging
     - j. Straightening
- B. Shearing
  1. Line shearing (slitting)
  2. Blanking
  3. Piercing or punching
  4. Follow-up on #2 and #3
     - a. Trimming
     - b. Shaving
     - c. Notching
     - d. Perforating
     - e. Nibling
     - f. Dinking
     - g. Lancing
     - h. Cutoff

III. Machining (material removal)
- A. Milling
  1. Peripheral (slab)
  2. Face
  3. Chemical
- B. Turning
  1. Facing
  2. Boring
  3. Spinning (flow turning)
  4. Knurling
  5. Cutoff (parting)
- C. Drilling
  1. Reaming
  2. Countersinking
  3. Tapping
- D. Sawing
  1. Filing
- E. Broaching
- F. Shaping
  1. Horizontal
  2. Vertical
  3. Special purpose
- G. Planning
  1. Double housing
  2. Open-side
  3. Edge or plate
  4. Pit-type
- H. Grinding (abrasive machining)
  1. Abrasive jet machining
  2. Honing
  3. Lapping
  4. Superfinishing
  5. Barrel finishing
  6. Vibratory finishing
  7. Spindle finishing
  8. Abrasive belt
  9. Polishing
  10. Buffing
  11. Burnishing
  12. Grit- or shot-blasting
  13. Tumbling
  14. Wire brushing
  15. Electropolishing
  16. Electro-chemical grinding
- I. Routing
- J. Hobbing (hubbing)
- K. Ultrasonic
- L. Electrical discharge
- M. Electron beam
- N. Electrochemical

TABLE 4.17.– CONCLUDED

- O. Chemical
- P. Photochemical
- Q. Laser beam

IV. Joining

- A. Welding
  - 1. Arc
    - a. Shielded metal
    - b. Gas metal
      - 1. Pulsed
      - 2. Short circuit
      - 3. Electrogas
      - 4. Spray transfer
    - c. Gas tungsten
    - d. Flux-cored
    - e. Submerged
    - f. Plasma arc
    - g. Carbon arc
    - h. Stud
    - i. Electroslag
    - j. Atomic hydrogen
    - k. Plasma-MIG (metal inert gas)
    - l. Impregnated tape
  - 2. Oxyfuel gas
    - a. Oxyacetylene gas
    - b. Methylacetylene propadiene (MAPP)
    - c. Air-acetylene
    - d. Oxyhydrogen
    - e. Pressure gas
      - 1. CO_2
  - 3. Resistance
    - a. Spot
    - b. Projection
    - c. Seam
    - d. Flash butt (flash)
    - e. Upset (butt)
    - f. Percussion
  - 4. Solid state
    - a. Ultrasonic
    - b. Explosive
    - c. Diffusion
      - 1. Hot press
      - 2. Isostatic hot gas
      - 3. Vacuum furnace
    - d. Friction
    - e. Inertia
    - f. Forge
    - g. Cold
    - h. Roll
  - 5. Electron beam
  - 6. Laser beam
    - a. Solid-state
    - b. Axial-flow gas
    - c. Cross-flow gas
  - 7. Thermit
  - 8. Induction
    - a. Low frequency (50–450 Hz)
    - b. High frequency (induction resistance; 200–450 kHz)
  - 9. High frequency resistance
  - 10. Electromagnetic
  - 11. Flow
- B. Brazing
  - 1. Torch
  - 2. Induction
  - 3. Furnace
  - 4. Dip
  - 5. Resistance
  - 6. Infrared
  - 7. Vacuum
- C. Soldering
  - 1. Iron
  - 2. Resistance
  - 3. Hot plate
  - 4. Oven
  - 5. Induction
  - 6. Dip
  - 7. Wave
  - 8. Ultrasonic
- D. Sintering (of powdered metals)
- E. Adhesive bonding (incomplete)
  - 1. Thermo-setting and thermoplastic
    - a. Epoxy
    - b. Modified epoxy
    - c. Phenolics
    - d. Polyurethane
  - 2. Adhesive alloys
  - 3. Miscellaneous other powders, liquids, solids, and tapes
- F. Metal fasteners
  - 1. Screws
  - 2. Nuts and bolts
  - 3. Rivets
  - 4. Pins
    - a. Cotter
    - b. Groove
    - c. Tapered
    - d. Roll
  - 5. Retaining rings
  - 6. Quick-release
- G. Stitching
- H. Stapling
- I. Shrink fitting
- J. Press fitting
- K. Plastic
  - 1. Hot-air-welding
  - 2. Friction
  - 3. Heated metal plate
  - 4. Solvent
  - 5. Dielectric
  - 6. Magnetic
  - 7. Ultrasonic
  - 8. Radio frequency welding

TABLE 4.18.– SELECTION CRITERIA FOR SPACE MANUFACTURING OPTIONS

- Make other options: Can this process be used to manufacture other basic process equipment?
- Productivity: Is the production rate adequate for the intended purpose? Production rate should be high relative to machine mass.
- Required consumables: What materials are consumed by the process (e.g., gasoline and oil for internal combustion engines)? Note that electrical power is not considered a "consumable" in this analysis.
- Production energy: How much electrical power, fuels, and other energy resources are required to operate the process? (Some figures in these analyses may be underestimates by a factor of 2-4, as they indicate power input to or output from a final stage rather than the total power required by the system.)
- Preparation steps: What is involved in making the process machine(s) and in preparing materials for processing by such machines?
- Production environment: What special environmental characteristics are necessary in order to allow the process to operate effectively? Of particular concern are atmospheric pressure (can the process operate in a vacuum, or is some form of atmosphere required?) and gravity (can the process operate in zero-g, or low lunar gravity, or is terrestrial gravity necessary or desirable?).
- Automation/teleoperation potential: Is it feasible to consider automating the process, or at least operating it manually from a remote location?
- People roles: What roles must people play, if any, either on Earth, the Moon, or in space?
- R&D required: Does the process appear to have a good potential for nonterrestrial use, and what research and development (R&D) steps may be necessary to enhance the viability of the process in such a setting? (Techniques to be used for production in the early phases of space manufacturing should be testable on Earth or in early LEO systems.)
- Tukey ratio: What fraction of the amount of materials required to utilize a process can be obtained from nonterrestrial sources as opposed to terrestrial sources? (Inverse of mass multiplication ratio.)

possible through powder metallurgy. For instance, cold welding and porosity control are two aspects which can more easily be manipulated in space than on Earth.

Cold welding first was recognized in the 1940s as a widespread effect between like metals. If two flat, clean surfaces of metal are brought into contact, they join at the molecular level and the interface disappears. Cold welding is strongly inhibited by surface flaws such as oxide layers, especially in those which are softer than the parent metal. Such films do not form quickly on fresh metallic surfaces of grains manufactured in the hard vacuum of space, as they do on Earth. Thus, metal powders will naturally form very cohesive structures upon contact or slight compression.

On Earth it is difficult to achieve porosities of less than 10% in uncompressed or lightly compressed powder forms. Significant changes in dimensions of parts may occur following a sintering or pressing operation. Theoretically, it should be possible to achieve arbitrarily low porosities by combining grains of many different sizes. However, this is not practical on Earth due to gravitational separation effects. In space, and to a lesser extent on the Moon, gravity effects can be so drastically reduced that uncompacted porosities of less than 1-3% may be possible. As an added benefit, in space individual parts can be gently transported to heating or pressure modules without the danger of fragmentation by gravity or rough handling.

Sintering, an increased adhesion between particles resulting from moderate heating, is widely used in the finishing of powder parts. In most cases the density of a collection of particles increases as materials flow into grain voids, and cause an overall size decrease in the final product. Mass movements permit porosity reduction first by repacking, then by evaporation, condensation, and diffusion. There are also shift movements along crystal boundaries to the walls of internal pores, which redistribute internal mass and smoothen pore walls.

Most, if not all, metals can be sintered. Many nonmetallic materials also sinter, including glass, alumina, silica, magnesia, lime, beryllia, ferric oxide, and various organic polymers. A great range of materials properties can be obtained by sintering and subsequent reworking. It is even possible to combine metals and nonmetals in one process. Solar energy may be used extensively for sintering operations in space.

Several techniques have been developed for the powdering of metals. Streams of metal can be atomized with or without gases; thrown against rotating surfaces and sprayed out; thrown off high-speed rotating wheels (especially those being melted as source material); projected against other

streams of metal, liquids such as water, or gases; or electrified. Solar thermal energy may be used in any of these processes, which represent the major energy-intensive step in powder metallurgical manufacturing.

A very large range of products is possible. Virtually any item which can be manufactured by forging, extruding or casting can be duplicated either directly or with appropriate reworking. In addition, special articles such as high-strength or highly refractory composites, filaments, linings for friction brakes, metal glasses, heat shields, electrical contacts, magnets, ferrites, filters, and many other specialized products can be made. Very complicated parts composed of metal and refractory components are directly producible.

The "flow" nature of powder metallurgical techniques is amenable to automation and remote control at all stages from design through production and inspection. The virtually complete separation of the major energy input stages from the design embodiment stage permits the early use of precise but low-force-level devices for near-final shaping. Powder metallurgy can use lunar iron and aluminum, is appropriate for vacuum manufacturing, is insensitive to particle or photon radiation, and can take advantage of zero- and reduced-gravity conditions. It is worth noting that vapor deposition of materials can also be considered as an alternative or supplemental process to powder metallurgy in some applications – such as the production of sheets or large areas of metals. An extended discussion of powder metallurgy appears in appendix 4C.

Plastics are mostly hydrocarbon-based. Raw materials necessary for their preparation are relatively rare in lunar soil. Hence, they must be extracted from bulk materials of carbonaceous chondritic asteroids or eventually from the atmospheres of other planets, their moons, or the solar wind, or else be brought up from Earth. Except for special uses in critical cases, it does not make sense to plan the extensive utilization of plastics in the early phases of space industrialization. These substances may be replaced by sintered or pressure-formed metals or by ceramic parts in many applications. A critical new research area is the possibility of replacing plastics in resin and composite applications with materials derived primarily from inorganic elements found in lunar soil in greater abundance (Lee, 1979).

There exists a great commonality between forming techniques in powder processes and in plastics. In addition, powder techniques are capable of making most, if not all, of the equipment necessary for plastics forming. Thus, if supplies of hydrocarbons ever should become more easily available (see section 4.4.2), the machinery and automation support already would be in place or readily adaptable to this purpose.

Deformation. Deformation includes ten major operations in forming and four in shearing, each of which may be further subdivided as indicated in table 4.17. Major aspects of these processes related to current industrial robot applications and possible automated space manufacturing options are provided in appendix 4D. Highlights of forming processes especially suitable for extraterrestrial utilization are given below. All shearing processes may involve cold welding, and can be performed best by laser beam or other techniques. The team noted that many space structures (such as photovoltaic cells) will be very thin, and thus are more appropriate for laser or E-beam cutting than the comparatively thicker members of typical terrestrial structures.

Regarding forming processes in space, low-weight electromagnetically driven forges may be optimal in view of the special technology created for the electromagnetic mass launcher (Kolm, 1977). At present, "mass-driver" forges are not used on Earth, although magnetic impact welding is being explored industrially at Maxwell Laboratories in San Diego, California.

Powder forging, inasmuch as it would apply to metal- and basalt-sintering options, deserves special consideration for research and nonterrestrial deployment. Powder forging is a relatively new technique able to produce more accurate parts at a lower cost than alternative methods. Unlike other processes, 1600-mesh basalt or lunar "soil" (plus plasticizer) pre-forms could possibly be forged in one operation by a single blow from a set of preheated closed dies. (For terrestrial basalts the temperature would be in the range of 1495-1515 K.) The terrestrial coining process to increase part density by reducing voids may be unnecessary in space, since vibratory or electrostatic quenching techniques may serve the same purpose to optimize forces in powders. Prior to forging, pre-forms are usually coated with graphite to prevent oxidation and provide lubrication. It is not presently known if graphite is required in the vacuum of space, since oxidation versus lubrication tradeoffs have not yet been quantified.

Rolling processes are well-suited to lunar operations, particularly when combined with the ribbon aluminum production line detailed by Miller and Smith (1979; see appendix 4D). In particular, thread rolling is an adaptation of the rolling process that may be ideally suited to high-vacuum manufacturing environments. Conventional die-cutting methods for threaded fasteners produce cutting chips. In space, these chips could contact-weld and foul other equipment if released as isolated fragments. Thread rolling overcomes both problems. Because threads are impressed, no fragments are produced, thus obviating chip vacuum welding. This cold-forming process has long been used in the fastener industry to produce precision threads at high production rates. Other applications have been recently devised, including forming small gear teeth, splines, and knurl patterns. It is possible that backing pieces for the moving and stationary dies needed for thread rolling could be made of cast basalt.

Extrusion has high potential for space manufacturing, as suggested previously in connection with powder metallurgy.

Conventional fabrication methods may be modified to produce lunar spun basalt using advanced automation techniques. An argument for pressurized lunar/space factories can be made if basaltic fiber manufacture is planned, since micron-diameter fibers exhibit vaporization losses under high vacuum (Mackenzie and Claridge, 1979).

A considerable amount of research and development is needed in all phases of vacuum metal extrusion operations. Little is known of dissimilar feedstock/die material cold welding effects, or of enhanced ductility. For basalt melt extrusion, studies are required to determine whether a spun product can be made from low-viscosity lunar basalt either by mechanical drawing or centrifugal spinning (see appendix 4D). Research on the following engineering variables would be useful: (1) Viscosity control; (2) speed of the winding drum; (3) duration of preload remelt; (4) chemistry of raw feedstock; (5) surface tension of melt; (6) temperature coefficient of viscosity; and (7) alternate cooling techniques (other than water). Favorability criteria driving this research include availability of basalt, availability and suitability of electrical energy on the Moon or in space for basalt processing, amenability of robots to high temperature components handling, and usefulness of the product in lunar and cis-lunar systems.

Four of the ten miscellaneous forming methods listed in table 4.17 deserve particular attention because they may be applicable to lunar or asteroid surface operations: shot-peen forming, vapor deposition, magnetic pulse forming, and electroforming. Although electroforming is well-suited to the production of thin-walled vessels it also requires an electrolytic working fluid, which downgrades it to a lower priority than magnetic pulse forming for space manufacturing. (Vapor deposition and electroforming accomplish similar functions.)

Vapor deposition of both polycrystalline and amorphous silicon has been chosen by Miller and Smith (1979) as part of their design for a space manufacturing facility. Their study found deposition rates of 0.5–4.0 μm/min to be a reasonable output for an energy input of 6 kW. Scaling up such procedures could result in the production of single crystal parts such as rivets or other more complex items; hence, vapor deposition provides a possible alternative to powder metallurgy. Hybrid structures, in which thin layers of vapor-deposited structures (such as mirrors) are later stiffened with basalt or basalt composites, are yet another possibility. Vapor deposition also is ideal for gossamer structures. Among the most significant products of this type which could be constructed might be solar sails (Drexler, 1980), devices in the shape of 10-ton spheres 100 nm thick and 3 km diam (see section 4.4.4).

Shot-peen forming is the method of choice for manufacturing airfoil sections with compound curves, where it is desired to form the metal leaving little residual stress. A computer-controlled shot-peen former is currently in use by Wheelabrator-Frye, Inc. of Gardena, California.

Magnetic-pulse forming could draw upon the magnetic accelerator technology now under development for lunar ore transport, as reported in the 1979 Princeton Conference on Space Manufacturing (Grey and Krop, 1979). Forming is accomplished using very intense pulsating magnetic field forces lasting only a few microseconds. Electrical energy stored in capacitors is discharged rapidly through a forming coil. (The capacitor bank currently used in the Princeton mass accelerator research program can supply 4×10^6 W.) In magnetic pulse forming, high-intensity magnetic fields behave much like compressed gases. The metallic workpiece can be uniformly impressed with pressures of up to 340 MN. Three basic methods of magnetic pulse forming are shown in figure 4.12.

Combined with a magnetic driving foil, magnetic pulse forming may be particularly amenable to shaping nonmagnetic superplastic metals (Mock, 1980). A new ternary eutectic of aluminum, zinc, and calcium (Alloy 08050) has been developed by the Alcan Aluminum Corporation which could possibly be pulse-formed into complex shapes. Products currently manufactured using magnetic-pulse forming technology include steering gears, drive shafts, ball joints, shock absorbers, and the assembly of vial caps, potentiometers, instrument bellows, coaxial cables and electric meters.

Electroforming is a modification of electroplating in which metal parts are deposited onto an accurately machined mandrel having the inverse contour, dimensions, and surface finish required of the finished part (fig. 4.13). Thin-walled structures (less than 16 mm) can be fabricated using this technique, with dimensional tolerances to 2.5 μm and 0.5 μm surface finishes (DeGarmo, 1979). Metals most commonly deposited by electroforming include nickel, iron, copper, and silver. Mandrels may be made of aluminum, glasses, ceramics, plastics, or other materials, although if nonmetals are used the form must be rendered electrically conductive. Plating temperatures and current densities must be carefully controlled to minimize internal stresses in the formed product. The final part must be carefully removed from the mandrel if the latter is to be reused. The electroforming process is suitable for automated techniques because few moving parts are involved and the operations are relatively simple.

Electroforming is considered a promising option for lunar and other nonterrestrial applications. Extremely thin-walled products can be manufactured, and mandrels may be prepared from aluminum and sintered/cast basalt. The need for an electrolyte-plating solution requires the electroforming unit to be pressurized and, possibly, operated only in an accelerated frame. The anode plate is consumed during the forming process, but iron and titanium are widely available for this purpose. The electrolyte is recycled (except when leakages occur), and energy constraints appear minimal.

Research on aluminum-coated cast basalt and shell reinforcement by spun basalt is of critical importance in

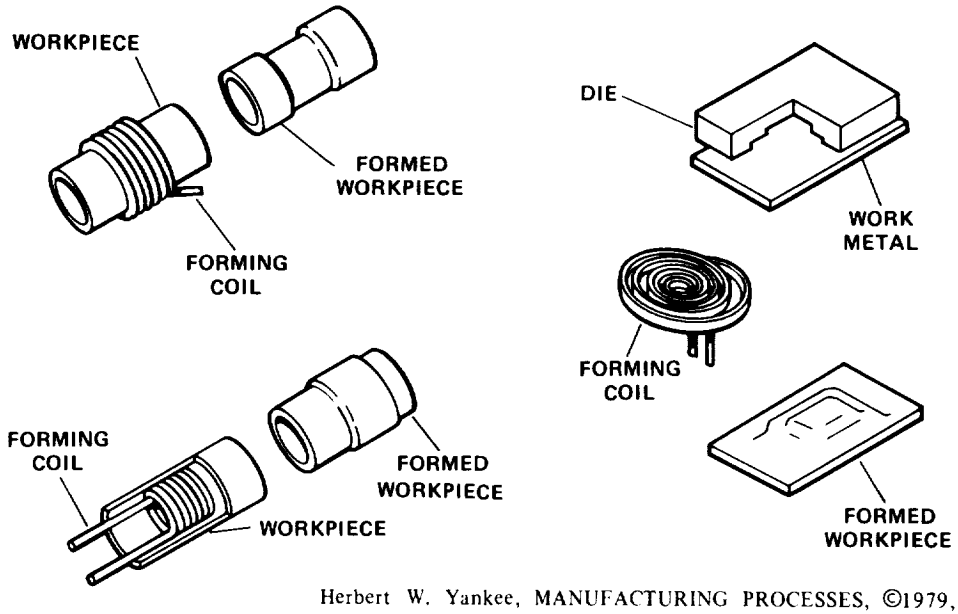

Herbert W. Yankee, MANUFACTURING PROCESSES, ©1979, pp. 349, 528, 533. Reprinted by permission of Prentice-Hall, Inc., Englewood Cliffs, N.J.

Figure 4.12.– Three basic methods of electromagnetic forming: (a) compression forming, (b) expansion forming, and (c) contour forming.

determining the feasibility of the electroforming manufacturing option. Automated processing also should be investigated, particularly with regard to monitoring electrical current densities as a function of metal deposition rate and techniques of mandrel-shell separation (while keeping electrolyte losses to a minimum).

Machining. Machining processes, for the most part, suffer several limitations as manufacturing methods in automated lunar, asteroidal, or orbital factories. The major limitation is the sensitivity of these techniques to the atmospheric configuration. Production efficiency, consumable requirements, and the ratio of machine mass to machine productivity further limit the utility of machining methods (table 4.19). The most promising options currently available are grinding and laser beam machining, techniques which appear to be both useful and adaptable to the space environment.

Milling can be divided into three basic categories – mechanical, chemical, and ion. Mechanical milling of metals in a high vacuum environment is exceedingly difficult with current technology because of the cold-welding effect. The machine mass/production ratio, required consumables, production energy requirements, and mass-multiplication or Tukey ratio are not favorable. Chemical milling is feasible only if reagents are produced from nonterrestrial materials; if not, the mass-multiplication ratio is prohibitive. Also, the efficiency and adaptability of chemical milling in high vacuum are low. Ion milling is also energetically inefficient.

Cold welding also is an inherent problem in turning operations under hard vacuum. In conventional lathing a metal tool is used to fabricate metal stock; hence, cold welding of the tool and stock becomes a serious potential problem. Basalt stock possibly could be turned, or basalt tools designed, to help alleviate this difficulty. Cutting fluids of the conventional type are unsuitable for space and lunar applications due to vacuum sublimation and the need for fluid reconstitution. The production energy, required consumables, and machine productivity ratio for turning are equivalent to those for mechanical milling, as are the required transportation costs.

Cold welding should not occur during grinding unless very fine abrasive grit is employed. However, tool life (e.g., of abrasive wheels) is likely to be short if grinding techniques are used exclusively to shape and mill in the same manner as mechanical milling and turning. Production energy, consumables, and mass/production ratio again are about the same as for mechanical milling. Grinding equipment transportation costs are relatively high, partly because of the massive machines involved that are often larger than milling equipment. Offsetting this disadvantage is the widespread availability of abrasives such as spinel (Al_2O_3) in lunar soil.

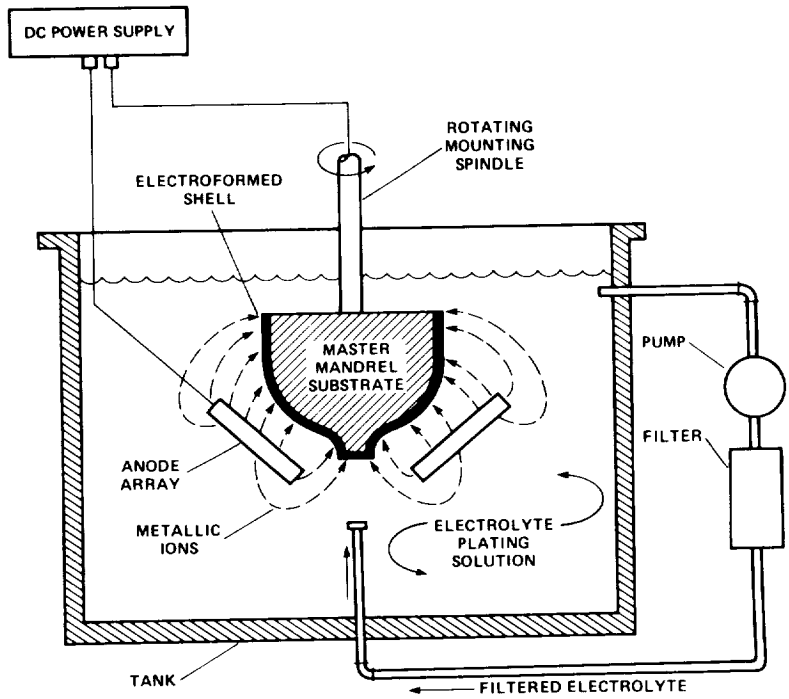

Herbert W. Yankee, MANUFACTURING PROCESSES, ©1979, pp. 349, 528, 533. Reprinted by permission of Prentice-Hall, Inc., Englewood Cliffs, N.J.

Figure 4.13.– A typical electroforming setup.

TABLE 4.19.– COMPARISON OF BASIC MACHINING PROCESSES

Technique	Production energy,[a] J/kg	Consumables required,[b] kg used/kg produced	Machine mass/productivity,[c] kg/(kg/hr)
Mechanical milling	$2\text{-}21\times10^6$	1.1-3.0	10-1000
Chemical milling	$(3.1\times10^5)^d$	1.01-1.5	0.5-10
Ion milling	$1\text{-}10\times10^7$	1.0-1.1	1000
Turning (lathing)	31×10^6	1-2	100-1000
Drilling	$10^4\text{-}10^5$	1.01-1.1	10-100
Grinding	$10^6\text{-}10^7$	1-3	100-10,000

[a]Production energy = energy required/mass of product.
[b]Consumables required = mass of starting materials/mass of product.
[c]Machine mass/productivity = machine mass/(mass of product/hr).
[d]HF milling solution (concentrate) calculated from heat of formation.

Laser beam machining (LBM), first demonstrated in 1960, may prove an extremely useful machining technique in future space manufacturing applications. On Earth, LBM already has attained "production machine" status. There are four types of laser processes theoretically available (solid-state, gas, liquid, and semiconductor), but only solid-state and gas systems are currently used in industrial machining.

Solid-state lasers employ a ruby, yttrium-aluminum-garnet (YAG), or neodymium-doped glass (Nd-glass) crystal rod that converts incoherent light from a krypton arc or tungsten-aluminum flash lamp to coherent optical radiation at a discrete wavelength. Solid-state devices are somewhat wavelength-limited (0.69-1.06 μm; Yankee, 1979) at the present time, and hence are of limited utility as generalized machining tools because the material to be worked must be wavelength-compatible with the laser. Solid-state systems can be employed effectively in some metal processing applications, although efficiency is lower than for gas lasers (Way, 1975) and only pulsating-mode operation is possible.

Gas lasers (fig. 4.14) have discharge and zig-zag tubes filled with argon or carbon dioxide (CO_2) which convert incoherent optical flash lamp radiation to coherent light with a wavelength of about 10.6 μm. Gas lasers are employed in continuous mode for nonmetal machining and in pulsed mode for metal machining. Since metallic substances are highly reflective at the CO_2 wavelength a pulsed beam (10^{-9}-10^{-6} sec bursts; Gross, personal communication, 1980) is needed to penetrate the surface and vaporize the metal (which causes a drop in reflectivity and enhanced energy absorption). The efficiency of metal machining with gas lasers also is not high.

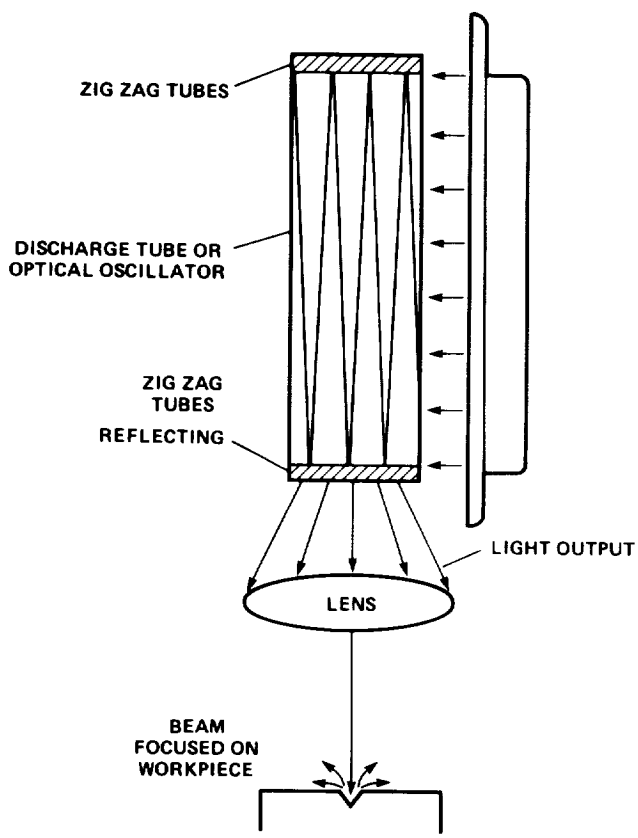

Herbert W. Yankee, MANUFACTURING PROCESSES, ©1979, pp. 349, 528, 533. Reprinted by permission of Prentice-Hall, Inc., Englewood Cliffs, N.J.

Figure 4.14.– Typical CO_2 gas laser system.

Laser beam machining has a wide variety of applications in manufacturing. Indeed, some tasks can only or best be accomplished by utilization of laser techniques, such as internal welding, high-accuracy dynamic balancing, case hardening, photoetching, flash trimming, insulation and coating stripping, drilling, measurement and testing to accuracies of ±0.2 μm (Yankee, 1979), flaw detection, and impurity removal (e.g., black carbon inclusion removal in diamonds). Still, LBM remains a micromachining technique and cannot reasonably be expected to replace bulk machining tools such as surface grinders or mills. Lasers are inherently inefficient; LBM requires a great deal of energy to machine comparatively minute amounts of material (Product Engineering, 1970; Way, 1975; Yankee, 1979). The energy of production, required consumables, and machine productivity ratios are unfavorable for bulk mass-fabrication at the present state of the art. Laser research projects funded by DOD and various military agencies have developed tunable helium-neon and xenon-fluoride lasers with relatively high (30%) conversion efficiency. The predicted peak efficiency with minor redesign, according to the developers, should approach 50% (Robinson and Klass, 1980). This is far in advance of contemporary machine shop LBM technology, which offers only 0.1-5% efficiency for solid-state lasers and 10% efficiency for CO_2 gas devices (Belforte, 1979). The advantage of tunable lasers is their ability to match lasing wavelength to the optimal absorption wavelength of the workpiece material.

LBM is very well suited to automated operation. Automatic laser beam machining of plastic flash already has been accomplished (Belforte, 1979; Product Engineering, 1970; Yankee, 1979), and a certain degree of automation is employed in laser welding. Robotics and teleoperated processes could be implemented using current automation technology in laser cutting, measuring, and flaw detection because sophisticated computer vision is not required. Laser operations such as case hardening, shaping, and impurity detection require more sophisticated machine intelligence technology than is presently available. Most LBM techniques today involve a certain degree of teleoperation, which suggests a potential compatibility with broader automation.

The lack of atmosphere and gravity in space are not serious impediments to the use of LBM; in fact, the absence of air may make lasers slightly more efficient in orbit or on the Moon. The only difficulty arising from the lack of atmosphere is plasma removal. In terrestrial LBM a gas jet removes vaporized material (plasma) from the workpiece. The gas jet technique is less feasible in space because it is difficult to generate gases without a great deal of energy. Fortunately, an electrostatic field probably could be utilized to carry away the highly ionized plasma, perhaps using a coil as a kind of "plasma vacuum cleaner."

The major limitation of LBM involves the production of its component parts. A solid-state laser requires a garnet, ruby, or Nd-glass crystal and a halogen, krypton, or xenon flash lamp; a gas laser requires CO_2 or neon gas. These materials are not easily produced in a near-term SMF. For example, 10-100 tons of lunar soil must be processed to produce enough carbon (by sublimation upon heating) for the CO_2 in one laser tube (Criswell, 1980; Williams and Jadwick, 1980; see also appendix 5F). Halogens, xenon, and krypton are not present in sufficient abundance on the Moon to easily produce the flash lamps (Williams and Jadwick, 1980) – at the pulse rates normally employed in solid-state lasers, flash lamp life is between 10 hr and 1 week under continuous operation. Garnet, ruby, and neodymium are not known to be present on the Moon or in space, although spinel (available on the lunar surface) might possibly be used instead of garnet. All these components must be produced in space if the SMF ultimately is to expand in a self-sufficient manner.

Joining techniques. Joining processes of some sort are universally required for manufacturing. Materials joining techniques include welding, brazing, soldering, adhesive bonding, metal fastening, stitching, shrink fitting, and press fitting. Sintering, the joining process associated with powder metallurgy, has already been discussed. Methods for joining plastics are not covered because these materials are inappropriate in the context of early space manufacturing; besides exhibiting poor mass-multiplication ratios due to their hydrocarbon composition, most plastics are volatile and degrade quickly when irradiated by strong ultraviolet light. Many joining techniques used on Earth, and all which appear feasible in space, are readily automatable. A detailed analysis of welding, brazing, and soldering techniques may be found in appendix 4E. A review of adhesives, fasteners and fitting technologies and their possible applicability in SMF operations appears in appendix 4F.

Welding leads to the permanent joining of materials, usually metals, through the application of some suitable combination of temperatures and pressures (DeGarmo, 1979). Approximately 40 different welding techniques have been utilized on Earth (Lindberg, 1977), the majority of which fall into one of five major categories: electric arc welding, oxyfuel gas welding, resistance welding, solid-state welding, and "electronic welding."

Contact welding occurs almost too easily in the vacuum environment of space. Prevention of undesired cold welding is probably a more challenging problem than weld creation during manufacturing. Friction welding may be combined with vacuum welding to facilitate removal of protective coatings from workpieces as well as to enhance bonding.

Electronic welding techniques (electron beam, laser beam, and induction/high-frequency resistance welding) all appear feasible for space applications. NASA has already made considerable effort to investigate these processes, including successful experiments with E-beam and laser beam welding in space (Schwartz, 1979). E-beams and laser beams are extremely versatile technologies. For example, lasers can drill, cut, vapor deposit, heat treat, and alloy, as well as weld an incredible variety of materials. High-frequency resistance and induction methods can also weld many materials with greater efficiency (60% vs 10%; Schwartz, 1979) than lasers can, though lasers and E-beam welders are capable of more precise work.

E-beam devices probably are the easiest of the electronic welders to construct in space. Major requirements include a vacuum, an electron-emitting filament or filament-plus-cathode, deflection plates, and a high-voltage power supply. Filament consumption rates range from 2-1000 hr/filament. Lasers, on the other hand, require precision-ground mirrors, flash lamp and rod (or gas and heat exchanger), etc. These parts are more numerous, more complex, and demand far greater precision of manufacture than those of an E-beam welder. As indicated in the previous section, gases needed for flash lamps in solid-state and gas lasers appear to be in short supply on the Moon, suggesting a poorer mass-multiplication or Tukey ratio. Likewise, neodymium-doped yttrium-aluminum-garnet (Nd:YAG) rods for solid-state lasers are difficult to produce from lunar resources. Both E-beam and laser-beam welders may draw tens of kilowatts of electrical energy in normal operation.

Brazing and soldering differ from welding in that a molten filler metal joins the workpieces at a lower temperature than is required to melt the workpieces themselves. Of the 15 brazing and soldering techniques identified in table 4.17, only vacuum (fluxless) brazing displays exceptional compatibility with the space environment. Compared with vacuum welding, vacuum brazing requires some heat to melt filler material but can bond a greater variety of materials – refractory and reactive bare metals, ceramics, graphites, and composites (Schwartz, 1979).

Under the general classification of "adhesives" are glues, epoxies, and various plastic agents that bond either by solvent evaporation or by bonding agent curing under heat, pressure, or with time. The recent introduction of powerful agents such as "super-glues" that self-cure permits adhesive bonds with strengths approaching those of the bonded materials. Epoxies are combined with metallic and nonmetallic fibers to form composites. Use of such materials, whose strength-to-weight ratios equal or exceed those of many metals, will perhaps constitute the primary application of adhesives in space.

Most glues are carbon-based. The relative scarcity of this element in space suggests that carbon-based glues should be used only where they cannot be replaced by other materials. Boron and carbon, the two most common substances used in composites on Earth, are both rare in space; aluminum and iron fibers may replace them in nonterrestrial fabrication of composites. Energy for fabrication

and glue curing is quite small compared with requirements for welding, and production of iron and aluminum fibers for epoxies should consume less energy than forming solid metal pieces. The major energy expenditure for glues is transportation from Earth. Careful studies are needed to determine tradeoffs between using glues as bonding materials or in composites, and welding or metal-forming requirements.

Space utilization of glues and composites imposes several restrictions yet also offers several advantages. Zero-gravity has little impact – the absence of atmosphere is much more significant. Many resins and glues used on Earth are fairly volatile and deteriorate under vacuum; however, some of them, once cured, are vacuum compatible. The planned early use of composite beams for space construction requires that such compatible bonding agents be available. (Actual use of these agents may need to be under atmosphere.) Many hydrocarbon-based glues weaken under the influence of radiation, and more research is required to develop radiation-resistant adhesives and bonding agents. The unsatisfactory Tukey ratio for current carbon-based adhesives is one of the major hindrances to their use in the long run. Manufacture of composite structural parts from nonterrestrial materials and the possibility of silicon-based bonding agents offer the promise of dramatic increases in mass-multiplication for nonmetallic bonding agents.

Metal fasteners may be grouped into two categories – those producing a semipermanent bond and those requiring either a releasable bond or a sliding bond. Screws, nuts, bolts, rivets, brads, retaining rings, staples and clamps are used for semipermanent fastening of objects when stress bonds or environmental conditions preclude gluing, do not require welding, or where the bond is intended for an indefinite service life. They are semipermanent in that they may be undone for some purpose such as repair. Nonpermanent fasteners include quick-release clips and clamps meant to come off at a specified time, and pins which allow relative movement of fastened parts. Pins are used where movements are not as rigidly constrained, as with bearings.

Metal fasteners are "consumed" during the process of fastening, but since they can be fashioned primarily from abundant lunar iron and aluminum the need for consumables and energy is about the same as that required to fabricate parts from these metals. The machines to manufacture and apply metal fasteners on Earth are serviceable in space applications if modified for zero-g and vacuum-compatibility.

Iron, aluminum, and titanium are abundant on the Moon; such nonterrestrial resource candidates will likely receive early attention. This suggests a favorable Tukey ratio for fasteners. The manufacture of iron and titanium units from lunar or simulated lunar material is a worthwhile early materials-processing experiment. The space environment enables metal fasteners to replace welds in many applications because the loads are generally lower in zero-g. Vacuum welding may strengthen bonds meant to be permanent. Surface poisoning or the use of incompatible metals would be required for breakable bonds.

Stitching is the process of joining parts by interweaving a piece of material through holes in the items to be coupled. The bond is frictional if the linked pieces are not rigid or tension-produced if they are. Interlace fasteners on Earth are made of organic threads of various sizes and compositions and are used mostly for joining fabrics. A major space-related use of interlace fasteners is in the manufacture of fabrics, primarily for space suits. Threads, strings, and ropes have been fabricated from nonvolatile inorganic materials having superior tensile strength and flexibility. There is little need for consumables except for bonding agents in the making of ropes. Ultrafine threads can be produced in space because the zero-g conditions enhance controllability of the extrusion pull rate.

The possibilities offered by metal and basalt threads (see section 4.2.2) and the comparatively unsophisticated character of fabric-stitching, rope-, and cable-making equipment promise exceedingly low Tukey ratios for these processes. The high-radiation and vacuum environment of space precludes the use of many terrestrial thread materials because of volatility and susceptibility to radiation deterioration. Basalts and metals appear capable of filling this applications gap. Lunar iron can be used to manufacture threads, strings, ropes and cables; Moon-like basalts already have been spun into 0.2–4.0 μm fibers (an established commercial process). Thread- and wire-production machines can be used in space with no specific modifications, and stitching-, rope-, and cable-making devices require only simple alterations to take best advantage of zero-g conditions. Even in applications where the fabric must hold pressure, metal and basalt fibers should prove adequate with minor design changes. The Space Activity Suit (Annis and Webb, 1971), for instance, maintains pressure by tension rather than by retaining a cushion of air.

Shrink fitting is accomplished by heating one piece so that a hole in it expands to accept (usually under pressure) another piece within that hole. Contraction with cooling then locks the two together. Press fitting is a related process requiring higher pressures but no heat. These two techniques are prime candidates for space assembly operations. Because no additional materials are employed, only power is consumed. Both processes are far more energy- and material-efficient than welding, and produce strong bonds. Beams made from rigid materials and many parts can be joined this way. (For example, gears are routinely attached to shafts by shrink fitting.) No bonding agents are required, and the parts materials (metals) are abundant in space. Zero-g permits lower-energy/lower-strength bonds. Shrink or press fitting is preferable to welding for light bonding; however, vacuum welding may provide added strength. Metals and other conductors may be heated by induction

techniques, making possible an extremely high mass multiplication.

4.3.2 Summary of Analysis of Production Options for Space

The survey in section 4.3.1 provided necessary background information for selection of processes which are especially appropriate for nonterrestrial materials utilization, summarized in table 4.20. All major manufacturing categories (casting, molding, deformation, and joining) are represented by at least five techniques. Containerless processing, with many potential applications for space, is an entirely new category possible only under zero-g conditions.

As previously noted, these techniques were chosen because of their advantages with respect to the selection criteria given in table 4.18. It is anticipated that the R&D necessary to adapt the techniques to useful productive tasks in space will be significantly less than that associated with processes where development must await investigations of a fundamental nature or more extensive space operations (either unmanned or manned). It should be possible to incorporate the consequences of the earliest possible applications of these techniques in space to the planning of space operations in the mid-1980s and beyond.

Table 4.21 summarizes 12 generic functional components required for space production of devices or products which could be manufactured by the techniques listed in table 4.13 using lunar-derived materials. (A brief discussion of these components appears in section 4.4). All functional elements except #9 (glasses) and #12 (lasing media) can be made directly by adaptations of powder metallurgy-based "starting kits." These two items would require the creation of derivative or second-generation production systems.

The team did not reject the use of the nearly 200 manufacturing procedures listed in table 4.10 for eventual use in space. However, most of these options require special support (e.g., supplies from Earth, special atmospheric conditions) or generally are low-ranked by the criteria in table 4.18. Flexible techniques such as provided by a terrestrial machine shop may be feasible and even necessary during future development of growing space industrial operations, but appear less fruitful to implement in the near-term.

In any event, a number of manufacturing options apparently exist that are sufficiently adaptable to the SMF mission, and a growing hierarchy of materials processing and manufacturing systems, in principle, is possible. Section 4.3.3 considers a subset of the general hierarchy in table 4.20 which appears to offer virtually a one-step method for manufacturing most of the devices of production (and other products) from both native-lunar and refined-terrestrial feedstocks. Section 4.4.1 examines near- and mid-term development of an expanding manufacturing complex in LEO.

4.3.3 Starting Kits

More than 40 manufacturing techniques were found appropriate for a near-term evolutionary SMF. The logical limit of this analysis is to determine whether or not there are technological subsets which could be embodied in compact systems to produce most of the mass of subsequent generations of machines of production. These bootstrapping systems or "starting kits" should take advantage of local available materials and be compatible with the use of automation and robotics. Most likely many such kits can be created, their designs strongly influenced by the materials available locally for manipulation.

The present effort focused on the handling of metals and ceramics known to be available from lunar or asteroidal materials, or potentially importable from Earth at low unit cost. No attempt was made to produce conceptual systems able to operate in the hydrocarbon-helium atmospheres of the outer planets and their moons, or in the sulfur-rich atmosphere of Venus or surface of Io. One major approach to starting kits suitable for near-term space manufacturing useful on the Moon involves powder metallurgy. This case was examined in some detail to help clarify the concept. Another approach using large blocks of metal was also briefly considered.

General comments on powder metallurgy and space. An extensive discussion of the development of powder metallurgy appears in appendix 4C. Powder metallurgy appears to offer several basic advantages for space manufacturing. Virtually all the energy for powdering metals, glasses, and possibly ceramics, can be provided by direct solar thermal power. Thus, primary energy systems (e.g., solar mirrors) can be very low in mass per unit of output and reasonably simple to fabricate. Grains of powder created, stored, and manipulated in a very hard vacuum should have minimal surface contamination and therefore will be susceptible to useful contact welding. Good internal bonding of powders thus may occur through grain contact, sintering, and melting. Lack of gas bubbles in a vacuum-manufacturing environment will also aid the production of well characterized parts.

It should be possible to achieve 90% or better of the ultimate powder density in "green" compact parts prior to final forming, if made under low-g conditions. This is because, in the zero-g operating environment of the SMF, very fine grains of the appropriate size and shape distributions could be placed in the void spaces between larger grains. On Earth this cannot be done reliably, since gravity causes smaller grains to settle toward the bottom of the green compact, producing parts of irregular density, composition, and strength (proportional to final density).

On Earth, large presses, sometimes also operating at high temperatures, are required to squeeze the parts to 99% or

TABLE 4.20.– MANUFACTURING PROCESSES APPLICABLE TO SPACE

Based on terrestrial experience	
Preferable	Usable with recycling or adaptation
Casting	
a. Permanent b. Centrifugal c. Die d. Full-mold e. Low-pressure f. Continuous	g. Sand h. Shell i. Investment
Molding	
a. Powder metals and ceramics	
Deformation	
a. Thread rolling b. Magnetic pulse forming c. Electroforming (basalt electrolyte) d. Rolling – reversing mill	e. Forging (with electrical drives) f. Lead-in mill g. Extrusion (basalts) h. Spinning (glass and basalt)
Machining[a]	
a. Laser b. Electron beam	c. Turning (basalts) d. Drilling (basalts) e. Grinding (recycle binder, using Al_2O_3-grit)
Joining	
a. Cold/friction welding (metals) b. Laser-beam welding c. Electron-beam welding d. Induction/HF-resistance welding e. Fluxless/vacuum brazing f. Focused solar energy g. Metal fasteners (permanent) h. Stitching (metal or inorganic threads) i. Staples j. Shrink and press fitting	k. Metal fasteners (need fusion preventers) l. Glues (need carbon)
Containerless	
a. Surface tension b. Fields – 1. E & M 2. Centrifugal 3. Gravity gradients c. Direct solar heating (differential) d. Vapor deposition	e. Metal and/or ceramic clays (binder loss)
Containments	
a. Powder/slab – cold welding b. Foaming (metals/ceramics)	c. Metal and/or ceramic clays (binder recycling and loss)

[a]In a vacuum environment most machine techniques will require a pressurized container to prevent cold-welding effects.

TABLE 4.21.– FUNCTIONAL COMPONENTS REQUIRED IN NONTERRESTRIAL MANUFACTURING AND AVAILABLE MATERIALS

Functional components	Materials
1. Structures	Metals (Fe, Al, Ti, Mg) Ceramics/glasses/basalts Reinforced materials
2. Refractories Molds, orifices	Major lunar minerals Chromia, titania, titanium silicide, glasses
3. Dies:	Steels (C, Si, Ni, Co) Silica carbides
4. Heaters: Direct solar Electric[a]	Mirrors (Al and/or inorganic shaped materials) Si (and others) solar cells
5. Insulation (electric and thermal) (glass fiber mattes)	Basalts, ceramics, inorganic fibers, glasses Soil, wools, foams – inorganic
6. Magnetic material (motors, separators)	Iron and alloys Magnetic ceramics
7. Electrical conductors: (motors, electromagnets, control circuits[a])	Al, Fe, Ca – low temperature
8. Grinders	Spinel in glass matte/Ca wheels
9. Glasses (optics)[a]	Si, SiO_2 (+ mixes of major and minor elements)
10. Adhesives and coatings	Metals, ceramics
11. Lubricants and fluids[b]	Sulfides, SO_2 (trace CO_2, H_2O, and compounds of K, O, N, Na, H)
12. Lasing media[a,b]	CO_2

[a]These specific products require second-generation or higher-generation production hierarchies.
[b]This component is a major problem because it requires chemical elements which are rare on the Moon.

more of final density from original densities of 70-90%. Major changes in physical dimensions may occur. It is conceivable that the need for such pressing operations can be eliminated almost entirely for many products and the changes in physical dimensions between green compacts and final product largely avoided by using either direct sunlight or electric heating in space for forming final parts. If very dense green compacts of near net-shape can be prepared then final parts should require minimal cutting or trimming which makes the use of laser or electron-beam devices in final shaping conceivable. Such devices are presently relatively inefficient for materials removal but are capable of very fine-tolerance operations.

Much terrestrial experience is available on powder technologies applicable to both metallic and nonmetallurgical materials. Many of the experiments necessary to adapt this technology to space could be performed in early Spacelab missions. In addition, there can be strong interaction among designers in the planning of parts derived from powders (e.g., overdesign size of parts for additional strength) and the evolution of in-space production techniques.

Impact molder system for production from powders. Figure 4.15 illustrates the impact molder powder process starting kit which consists of a powder/liquid injector ⑦ and a two-dimensional die ② enclosed in a scatter shield ③ . The shield prevents grains which are misaimed or which do not stick to the working face from drifting out of the production area. Wasted grains can be removed and eventually recycled. The injector directs particles ⑧ sequentially across that portion of the working face ① of a part which needs building up, continuously adding thickness as desired at any particular point. Insertable shields can be used to create voids and produce internal patterns (not shown). Metal grains are cold-welded at the

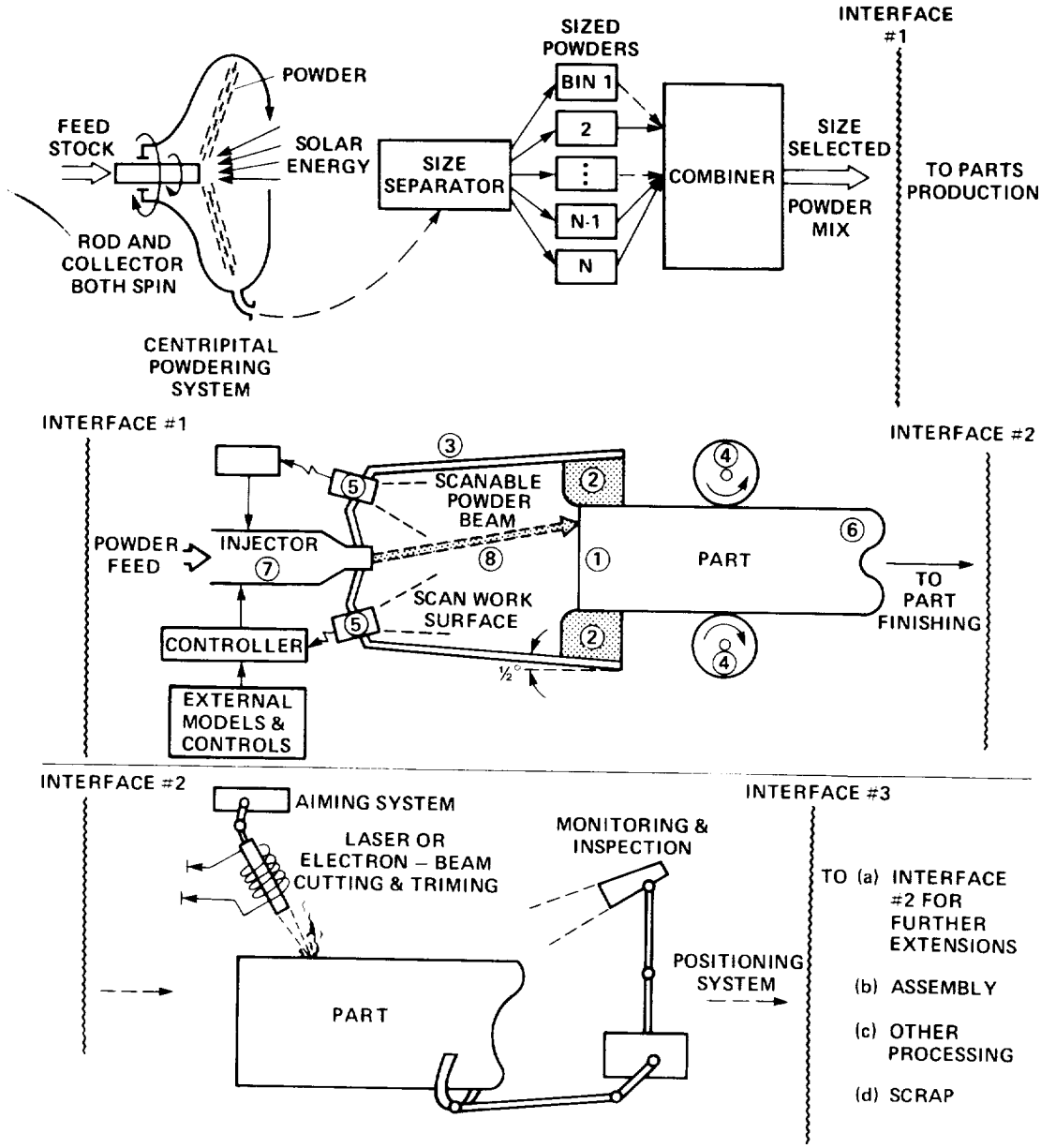

Figure 4.15.– Impact molder powder process starting kit.

instant of impact and coalesce by cooling. Size-distribution management of injected metal powder particles should make possible parts of minimum porosity (i.e., no greater than 3-5%). Vapor-deposition techniques might be useful in decreasing the porosity still further.

The developing workpiece is actively inspected by scanning electron microscopes or optical sensors ⑤ which guide the beam to areas where the surface is rough, appears too porous, or has not adequately been filled. Beam cross-section is fixed by the interior shape of the ceramic die. This die can be made by a casting process or by cutting out blank disks. Rollers or other grippers ④ slowly extract the workpiece from the die as it is formed. A starting surface ⑥ must be provided upon which powder forming can begin and to which extraction devices may be attached.

After formation, parts move to an inspection station for final trimming by a high-energy laser (which exerts no force on the workpiece) or other cutting device. If necessary, pieces are sliced perpendicular to the formation plane to produce more complex parts than can be manufactured directly from the die. It should be possible for a precision, low-mass robot to hold pieces for final trimming. Final choice of finishing tool depends on the tolerances achievable in parts formation as well as tool efficiency.

The impact-molder system produces rodlike components in the first operation of the procedure. It should be possible to build more complex parts by repositioning rod components perpendicular to the die ② and using the side of the finished part as the starting point for appendages. The process can be repeated as often as necessary so long as access to the die mouth is possible.

Throughput varies depending on the velocity of scanning beam material, number density of particles, mass of individual particles, and cooling rates obtained at the casting die when powders are used. Parts which can tolerate large porosity prior to sintering possibly may be produced at the rate of 1-10 kg (of machinery)/kg-hr. Parts demanding low initial porosity (less than 5%) and very high tolerances must be composed of a wide range of grain sizes, and smaller grains must be placed most precisely by the ejector. The anticipated production rate of these parts is 0.01 kg/kg-hr or less.

Several different injection systems may be used depending on the velocity and mass of the grains to be accelerated. More massive particles must be emplaced by mechanical ejectors, perhaps to be operated by electric motors. Smaller particles (less than or about 1 μm) may be propelled by precision electrostatic systems. Deposition rate M (kg/hr) is of the order $M = fpvA$, where f = filling factor of the beam, p = density of input metal (taken as 5000 kg/m^3), v = injection velocity, and A = injection nozzle area (assumed 1 mm^2). If the reasonable values $f = 0.1$ and $v = 100$ m/sec can be obtained, then $M = 180$ kg/hr. Specific input power P (W/kg) is given by $P = 1/2\, pfAv^3 = Mv^2$, hence $P = 500$ kW/(ton/hr) in the above example. Equipment mass is dominated by the ejector electrical supply (at $v = 100$ m/sec), suggesting a total system productivity of about 5 ton machinery/(t/hr product) and assuming a solar array with specific power rating 10 ton/MW. Note that M scales with v whereas P scales with v^3 – at early stages of production it may be advantageous to operate at low ejection velocities and accept the implied lower throughputs. These estimates are significantly lower than those for mechanical milling – about 2 MW/(ton/hr) and more than 10^4 ton/(ton/hr) – given in table 4.19.

Most of the energy required for the powder-making process can be supplied as direct focused sunlight by systems with intrinsic power of 300 MW/ton. Thus, the solar input subsystem represents a small contribution to the total mass of the powder processor. Little material should be consumed in the production process, with die wear dominating losses.

One major disadvantage of this approach is its primary applicability to production of metal parts or metal-coated ceramic parts. Most other materials must be passively restrained during the sintering process. Parts appropriate to the preparation of ceramics or fused basalts or other nonmetallic materials require the creation of a subsequent set of tools for the construction of ceramics and basalt manufacturing facilities.

There are several areas for applications of robotics and advanced automation techniques in production, process monitoring and parts handling. Process monitoring is required in powder preparation, sorting, storage, and recombination. Very high speed monitoring is necessary at the impact surface of the part under production, especially if a wide range of grain sizes is needed to reduce porosity. Many options for such monitoring that will include active means (e.g., scanning electron beams, sonar interior scanning, radiation transmission measurements) and passive means (e.g., optical examination, temperature) must be examined. In effect, machine intelligence is applied at the microscopic level of the materials handling process. Very detailed analysis of macro-handling of parts is necessary, including such operations as extraction, moving parts in physical space without impacting adjacent objects, parts repositioning for trimming, cutting, or sintering, and monitoring the effects of these operations. Finally, parts are passed to assembly robots or automated lines. Many of the procedures are extensions of present technologies of automatic transfer in terrestrial practice. However, there will be far more emphasis on reliability, scheduling, flexibility, and repairability.

Metal- and ceramic-clay-based starting kit. According to Jones (1960), the concept of manufacturing metal objects from powders formed into clays using spinning or sculpting techniques is a very attractive one. This is true especially if it is possible to avoid drying out periods and obtain high densities with relatively brief sintering times. Binders are feasible for Earth applications – polystyrene and polythene in particular, each of which is recoverable and nonreactive with the more common metals, and both are suitable for the production of clay-like metal masses. While such recyclable organic binders may be useful in space and on the Moon, certainly it would be more advantageous to obtain binders from local sources. Desired characteristics include the following:

- The binder should impart a stiff clay-like quality to the metal or ceramic mass and permit easy manipulation, have a sufficiently low volatility under the desired working conditions to allow a reasonable working period, and leave no residue following the completion of sintering.
- The binder should not require removal prior to placing formed clay into the sintering oven, but should not disrupt the molding during volatilization.
- The rigidity of the molding should be maintained during the early phase of sintering.
- The binder and its solvent (if needed) should not react chemically with the powder either at working or elevated temperatures, nor should they attack furnace components or elements of the recovery system.

- Binder and solvent should be nontoxic under the working conditions in which they are used.

Table 4.22 identifies several binders appropriate for use on Earth. The last compound listed is preferred on the basis of slow evaporation rate, high boiling point, and high flash point. Thermoplastic binders such as polybutene dissolved in xylene with a hydrocarbon wax, or ethyl silicate, are other possibilities. These are introduced into molding furnaces at moderate (430 K) temperatures and have permitted the successful molding and sintering of small objects. Unfortunately, workpiece rigidity is insufficient for terrestrial manufactures bigger than 5 cm; larger items tend to slowly collapse at room temperatures. Clearly, bigger parts could be made on the Moon, and there is no serious limit on the size of objects which could be sculpted in space.

TABLE 4.22.– METAL/CLAY BINDERS APPROPRIATE FOR TERRESTRIAL USE

Binders	Boiling range, °C	Flash point, °C	Evaporation rate[a]
Methyl amyl acetate	143-150	110	47
Ethylene glycol diacetate	186-195	205	2
2-ethylhexyl acetate	195-205	190	3
2-methoxyethyl acetate	137-152	140	31
Ethyl benzene	134-137	85	91
Carbitol acetate	213-223	230	<1
Decahydronaphthalene	190-200	160	10
Tetrahydronaphthalene	203-220	185	1

[a]H-butyl acetate = 100.

Binders in space may be able to function in two additional ways. First, the compounds may be selected to inhibit contact welding between grains to facilitate the greatest packing of voids by filler grains. Second, initial binder evaporation could expose surfaces to permit preliminary contact welding prior to full sintering of the part. An extensive literature search should be conducted to determine whether or not such compounds can be derived from lunar and asteroidal materials. Lee (1979) has suggested several liquid silicon-based and Ca-O-Al compounds that could be derived predominantly from lunar materials. Perhaps such fluids (for which recovery is not as critical) could be adopted for vacuum forming.

The powder metallurgy approach to manufacturing has considerable potential in nonterrestrial low- or zero-g applications. There is virtually a complete separation of the three basic stages of production: (1) creation of working materials (high energy), (2) embodiment of a design into a mass of clay to form a part, and (3) hardening of the part by contact welding and sintering. Very complicated designs can be produced by machines able only to apply relatively small forces, allowing considerable quantities of mass to be formed for very little energy but potentially with high precision.

Figure 4.16 illustrates three techniques for pattern impression. One possibility is to inject the clay into a mold. This mold may be very intricate provided it is sacrificed after sintering, a modest penalty because of the low initial temperatures. Second, clay could be packed around "melt forms" (recoverable from the vapor) to make pipes, conduits, and other structures with internal passages. Third, parts could be sculpted directly from masses of clay. These masses could be initially amorphous or might be preshaped to some extent by molds or spinning techniques as in the manufacture of pottery on Earth.

Advanced automated pottery techniques are not limited to the production of metal parts because sintering is used in the final stage. For instance, metal and ceramic parts could be interleaved in the clay stage to produce, say, electrical machinery. In such applications the porosity of the different ceramic and metal powders in the various portions of the respective clays is carefully controlled so that differential expansions and contractions during the formation process do not ruin the part. In addition, hollow metal grains would permit local metal volumes to decrease under planned stresses as necessary during the sintering process. Conceivably, this could allow very complicated metal paths to be melted directly into the body of a ceramic material having a much higher melting point and also to produce exceedingly complex composites.

It is interesting to speculate on the ultimate limits of the above techniques with respect to the size and complexity of the final object. Rates of expansion, heating and cooling of the workpiece (which presumably can be well controlled over long periods of time in space using solar energy), gravity gradients, rotation and handling limitations during the formation phase must all be considered. It may be that the largest objects must be formed in very high orbits so that continuous sunlight is available during critical periods and gravitational tidal effects remain small. Perhaps, in the ultimate limit, major mass fractions of spacecraft, space stations or habitations could be manufactured in monolithic units by this process.

Clay metal and ceramic technologies suggest a number of theoretical and experimental projects or demonstrations related to both near- and long-term terrestrial and nonterrestrial operations. Experiments on grain size distribution, dimensional changes, compositions of metals and ceramics, and choices of binders with regard to porosity, new molding and forming techniques which might be employed in space, and the general area of automatic production, inspection, and robot handling are all appropriate research topics. Indeed, one of the most important characteristics of starting kits is the easy automatability of the tools involved.

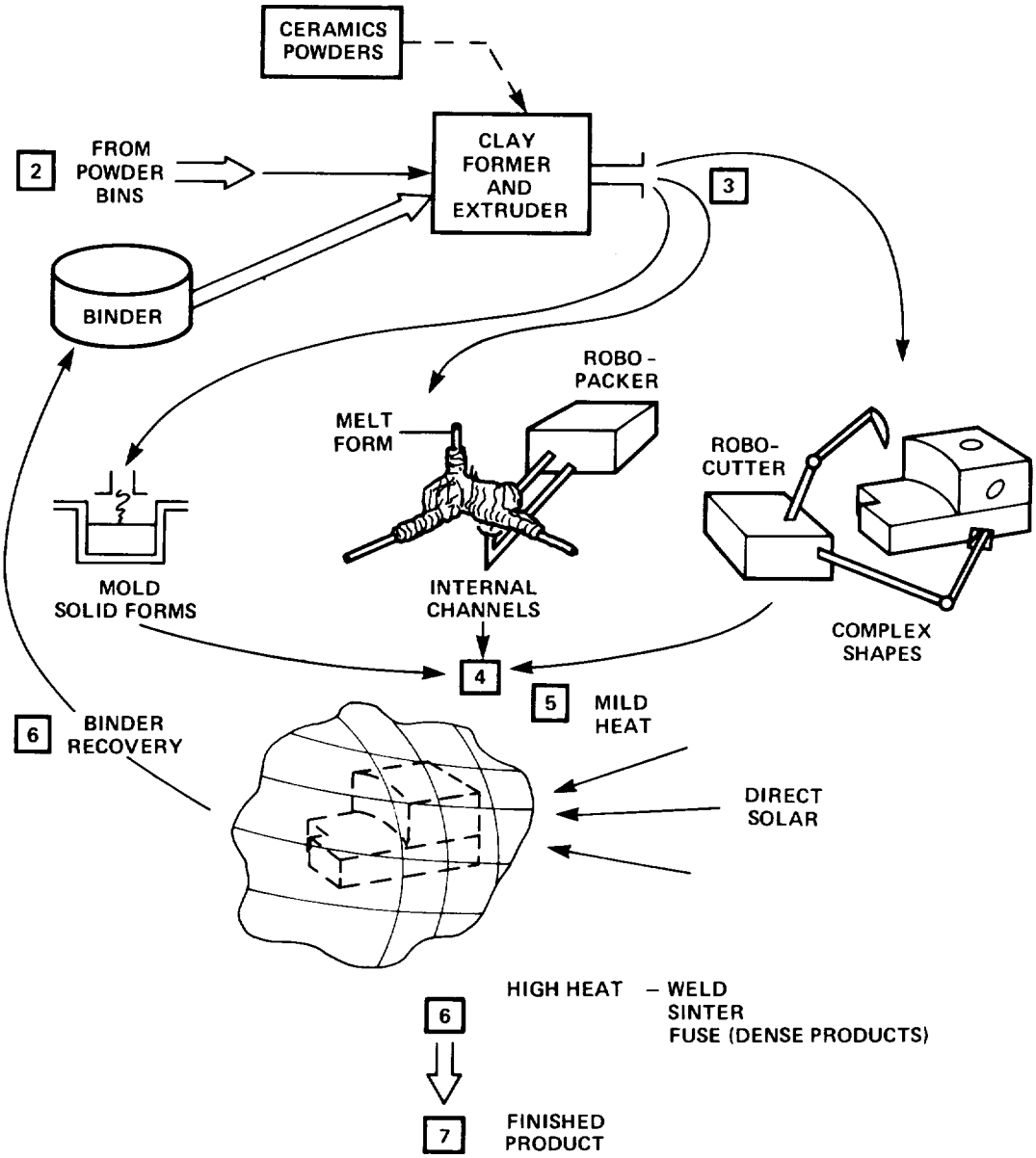

Figure 4.16.– Metal clays and pottery manufacturing.

In the basic kit, forming and shaping functions of the fabrication robot are farthest from deployable state of the art. But tools and techniques have been chosen that can generate a wide variety of products of differing complexity using relatively few simple modes of operation. These starting kits could be deployed in the near-term as part of a fault-tolerant, easily reprogrammable prototype SMF.

Macro-blocks and contact welding. It is conceivable that many useful tools and products, especially very large parts, could be quickly manufactured from metal blocks of various sizes. The same or similar metal blocks with clean surfaces will cold-weld when pressed together with sufficient force. One problem with this approach is that pressures in excess of 10^7 Pa may be required even for blocks with extremely smooth surfaces, making large powerful presses impractical in the early phases of an incremental space industrialization program. One possible solution is to manufacture a very fine "dust" of hollow particles of the same metal as the pieces to be joined. Dust particles should have approximately the same radius as the asperities of the large blocks. This "dust" is then evenly distributed over the contact surface of one of the pieces to which it would adhere by cold welding and the second piece is pressed upon it. Joining pressure need only be sufficient to flatten the hollow spheres, permitting them to flow into and fill voids between the two macrosurfaces. Electrical current

passing across the gap between the blocks could heat the dust and further promote joining.

This approach to construction would allow the use of a small number of furnaces and molds to produce standard sets of blocks from appropriate sources of metals. The blocks could then be contact-welded to manufacture a wide range of structures. While such blocks would not allow detailed flexibility of design as might be permitted by the two powder metallurgy systems described earlier, the throughput of the system for the construction of large repetitive objects would likely be significantly higher. A major potential difficulty requiring far more study is the degree of smoothness necessary prior to joining and the precise size distributions of hollow powders used to fill the gaps between the blocks. This may limit the maximum size of blocks which can be joined with minimal preworking.

Starting kit technology development. Sufficient knowledge exists with respect to powder metallurgy, space operations in LEO and on the lunar surface, and about lunar materials near the Apollo landing sites for development of starting kits to begin. Naturally, the relevant concepts should be fully reviewed by experts in the respective fields. These reviewers might also define key experiments and tests necessary for convincing near-term demonstrations (see section 5.6 for a useful relevant methodology). For instance, it would be useful to demonstrate (perhaps in low-g aircraft or sounding-rocket flights) the sintering of multisized powders which are well-mixed prior to sintering. Detailed consideration should also be given to the design of subsequent components by conceivable starting kits.

Demonstration of the full capabilities of contact welding may not be possible from Shuttle-supported facilities in LEO without incorporating a molecular shield into the mission and performing the key tests beyond the immediate vicinity of the Shuttle. Even at LEO there is sufficient ambient gas (e.g., highly reactive atomic oxygen) that surface contamination may be significant. However, LEO experiments should be able to show the full potential of powder techniques with respect to powder forming using solar energy, zero-g, and green mold densification, final product sintering or fusing using solar energy, and working with metallic/ceramic clays in space including binder recovery techniques.

The powder approach possibly may be useful on the lunar surface. Fine-grained (1-10 μm) metallic iron is present in lunar soils to 0.1% by weight. This metal can be extracted magnetically and separated from adhering glass and minerals by direct heating. Such iron may be used as a structural, electrical, or magnetic engineering material. Various other lunar soil components can be used for structural and insulating purposes. Hence, it appears possible to effectively utilize native iron using little more than a thermal processing technology capability. If so, then the "starting kit" approach can be employed to create much larger iron-processing facilities on the Moon over a period of time by "bootstrapping" what is essentially a very simple system.

Chapter 5 of this report explores the initial deployment of "starting-kit-like" devices capable of self-replication as well as growth.

4.4 SMF Growth and Evolution

Following its deployment, the starting kit begins to manufacture second-generation tools, as well as replacement parts for itself. These tools can be used to produce additional types of equipment and early product lines. Eventually, space-compatible equivalents of all major terrestrial manufacturing processes and new systems evolved in space must be available to the evolving SMF.

Further growth and increased complexity are required if the SMF is to evolve from the starting kit into a sophisticated manufacturing center which depends less and less on Earth for raw materials resupply. One key growth area especially significant in view of the heavy requirements for computers and robotics in space is the automated fabrication of integrated circuitry and other electronics components. Certain unique characteristics of the space environment, combined with anticipated advances in laser-, electron-, and ion-beam technologies, may make possible automated machinery capable of manufacturing highly sophisticated integrated circuits as well as resistors, capacitors, printed-circuit boards, wire, and transformers in space, using raw materials supplied entirely from the Moon, and ultimately a wide variety of additional complex products.

4.4.1 Starting Kits for SMF Growth

Having considered a range of possible starting kits, the Team next explored the possibility of an ever-widening collection of production machinery using kits described in section 4.3.3. This aspect of the analysis is crucial to growth and evolution, since the taxonomy of manufacturing processes is distinct from the list of functional components comprising the implements of manufacturing. Table 4.21 showed the major functional machine components which must be available in a growing SMF. Nonterrestrial, especially lunar, materials can be used in most cases. The most serious deficiencies are the lubricants and fluids needed for pressure transfer or solution-processing (electrolytes, wetting agents), though silanes may be serviceable in lunar applications. High-powered lasers are convenient for cutting and finishing in space. The Moon is somewhat deficient in the most common gases used in tunable power lasers, He, Ar, Xe, but fortunately each gas is readily recyclable.

Manufacturing components listed in table 4.21 were reviewed specifically for derivability from starting kits, with

the assumption that appropriate processed materials would be supplied as feedstock to the SMF:

- Structures – A wide variety may be produced directly from any starting kit as described in section 4.3.3. These range from very small solid pieces such as shafts or dies to much larger components including rigid members for heavy presses. Metals, ceramics, and ceramic/metal combinations can also be prepared.
- Refractories and dies – can be manufactured using the powder metallurgical components of the starting kit. Laser trimming can be performed as required after solidification and inspection of the part. These components then become available for casting complex shapes and for extruding both long-dimension components and parts designed to sustain very high temperatures and pressures.
- Heating – by direct solar energy may initially be accomplished using aluminum deposited on spherical surfaces. These surfaces may be shaped by rotation of unitary structures of appropriate radii of curvature extruded using the starting kit. Alternatively, metal vapor deposition on interior subsections of bubbles grown in zero-g may be used. The existence of solar-electric devices is assumed.
- Insulation – for both thermal and electrical needs can be derived from fiberglass mattes produced by a spinning process involving the extrusion of molten glass through small orifices. Electrical insulation exhibiting mechanical softness or compliance is achieved by pressing fiber mattes into long thin ribbons and then wrapping these tightly around the wires, followed by partial sintering. Basalt fibers may be useful in this application (see section 4.2.2).
- Magnetic materials – can be manufactured directly from the starting kits or by powder metallurgical technologies. Dies and heating equipment produced in earlier steps are probably required for maximum versatility.
- Electrical conductors – particularly wires for motors, busbars and other purposes, may be extruded (original starting kit equipment) or fabricated using rollers and dies derived from structure and refractory manufacturing components produced earlier.
- Grinders – are needed for precision finishing of surfaces. These tools should be producible by pressing and casting operations available with the starting kits. Grinders may be composed of spinel grains (a lunar-abundant grinding agent) embedded in glass fiber mattes perfused with calcium for mechanical softness and binding.
- Glasses and fibers – can be manufactured by using casting, grinding, and die-extrusion operations. Grinding is required for optical-quality glass shapes. Electron-beam and laser techniques are useful for final finishing of optical surfaces.
- Adhesives and coatings – of metals and ceramics can be applied by the starting kits or a specialized kit suited to the particular geometries of certain parts.
- Lubricants and fluids – present special problems because of deficiencies in presently known lunar raw materials resources. It may be that self-lubricating powder metallurgy bearings containing brass and lead in very small quantities are feasible. Also, silicon-based compounds requiring a minimum of relatively rare lunar carbon and hydrogen should be extensively investigated.
- Lasing media – It is also important to determine to what extent lasing media for high-power lasers can be derived primarily from lunar materials. Undoubtedly a considerable literature applicable to such devices already exists, but is classified for military reasons.

Control systems and electronics (see section 4.4.3) are also necessary, especially for automated manufacturing facilities in space.

Several technologies with limited terrestrial applications may prove extremely useful in space. One example is containerless production, in which objects are formed directly from melts. Overall shape is controlled by surface tension, external forces, and directed solar heating. Vapor deposition is another potentially favorable technique which should be given high research priority. Also, as the human presence in space expands, special production environments that allow the use of gases and liquids will become more commonplace. Thus chip-producing machinery, foaming and other processes requiring the recovery of production fluids may eventually become feasible in space.

It is easy to see how a starting kit might generate production equipment required for other space-compatible manufacturing techniques. (Shearing operations are assumed to be within the capabilities of starting kit laser beam units). For example, laser techniques for scribing reverse threads onto hardened steel rolling dies is a foreseeable technology (fig. 4.17). The availability of chromium on the Moon (0.6% by weight and higher in beneficiated iron grains) and lunar basalt for base plates makes thread rolling a valuable adjunct to the starting kit extrusion system.

A second example is magnetic-pulse-forming equipment. The two main components of the magnetic-pulse former are the forming coil and the capacitor. Robots with appropriate wrist actions should be capable of conventional winding operations to manufacture forming coils from extruded wire. The capacitor may consist of a basalt/aluminum or

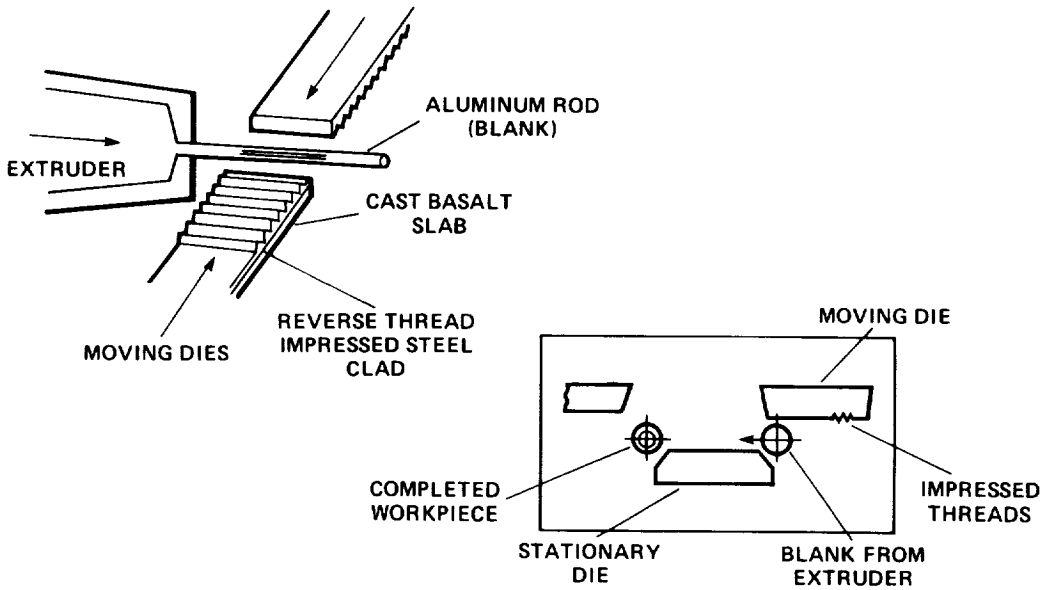

Figure 4.17.– Schematic of the principle of thread rolling.

alumina/aluminum sandwich based on the standard formula $C = kEA/d$, where C is capacitance, k is the dielectric constant of basalt or alumina (4.5-8.4 at 10^6 Hz), E is the permittivity of free space, A is capacitor plate area, and d is plate spacing.

A third example is electroforming technology. As discussed in section 4.3.1, the components of an electroforming unit are somewhat more complex than those of magnetic-pulse formers because of the need for an electrolytic plating solution. The tank containing the solution may be fabricated using the extruder, then welded together by a laser beam unit. The mandrel (fig. 4.13) may be formed of cast or sintered basalt over which aluminum is vapor-deposited. Iron or titanium anode plates are no problem for the starting kit extruder, and centrifugally spun basalt may be used in the electrolyte filter. Cast basalt pipes, an off-the-shelf terrestrial casting technology, provide necessary plumbing for the entire electroforming system.

4.4.2 Near-Term Manufacturing Demonstration: Shuttle Tank Utilization

The Space Shuttle external tank (Martin Marietta Corporation, 1974) carries liquid fuel for the Shuttle main engines and separates from the spacecraft just prior to orbital insertion at an altitude of about 128 km. The cylinder then follows a ballistic re-entry path, crashing into the ocean far from inhabited areas. The cylinder is not recovered or reused. But the tank, when dropped, has already achieved roughly 99.7% of orbital velocity. The added delta-V needed for tank orbital insertion is only 46 m/sec, about 10% of available Shuttle Orbiter thrust. Alternatively, the tank could be orbited by burning the main engines for a slightly longer time, or with the aid of a jet-assisted takeoff (JATO) booster. The cylinder itself measures 8.4 m diam, 47 m long (a volume roughly equivalent to that of a 10-story condominium), and 33,503 kg in inert weight. Most of this mass is pure structural aluminum, though about 100 kg of outer skin insulation contains organic materials which could serve as the basis for early organic chemistry at the SMF (carbon, plastics, biological products, and so forth). A few tons of unused propellants (LOX and LH_2) may also be present, and surplus materials from Shuttle operations (hydrazine, helium, food, etc.) could be stored in orbit for later use.

Any Shuttle flight carrying a volume-limited cargo can bring the external tank to orbit with near-zero propulsion costs. Valued as payload at about $1000/kg, an empty tank is worth about $33.5 million, less additional propulsion costs but plus added value derived from conversion of tank mass to useful products by the SMF. If Shuttle flies every 2 weeks, the payload value of the tank masses inserted into orbit would be the equivalent of roughly $1 billion per year. To an orbital space manufacturing economy this represents new additional income, in this case the equivalent of about 20% of the current annual NASA budget.

For such a cost-effective program to be implemented, the means for orbital insertion of the tank must first be perfected: Next, a system (teleoperated or robotic) should be designed which is capable of scraping off valuable external insulation. Cutoff valves must be added to prevent excess propellant from venting (permitting it to be stored in orbit rather than lost to space).

The starting kit provides a means of reducing the tank to powder or liquid form. The kits described earlier can

accomplish this directly without the necessity of manufacturing additional process equipment. Another possibility is a solar-powered milling device (with portable atmosphere) which clamps onto the external tank and carves it into small pieces, most likely under teleoperator control. Tank fragments are then melted by a solar furnace consisting of a spherical mirror constructed by aluminizing a thermoplastic bubble hemisphere (Moore, 1980). The plastic allows sunlight to enter but retains infrared radiation by internal reflection, keeping the work materials hot. A hatch is cut in the mirror to permit insertion of metal shards, which join the growing droplet of molten aluminum at the focus. The melt volume of an entire tank would be about 12 m^3, easily maneuverable through a small opening if processing proceeds in a dozen or so smaller batches.

Once tank material is molten a variety of manufacturing options become available. Ingots or simple bulk castings could be prepared as feedstock for other SMF processing operations. Liquid or vapor metal streams could be directed into molds or sprayed onto lighter structures for stiffening. For instance, thin thermoplastic bubbles may be aluminized to make pressure vessels, mirrors, or heavy solar sails; then plastic is stripped off and recycled. A more elegant method is to blow uniform metal bubbles directly, an ideal zero-g application. Aluminum is a good thermal conductor and reflector, and hence radiates heat slowly while retaining an even temperature distribution. Small tin bubbles have recently been blown experimentally in drop towers (Wang and Kendall, 1980), but far more research remains to be done.

Quite large volumes can be enclosed by structures manufactured using metal derived from a single Shuttle external tank. Aluminum pressure vessels 50 mils thick can retain one-third normal Earth atmosphere (O'Neill, 1977). Average tank thickness is about 250 mils, so a pressure vessel of roughly 13,000 m^3 can be made from just one tank. This is more than fifty times the volume of the Space Shuttle cargo bay (240 m^3).

4.4.3 Middle-Term SMF Expansion: Manufacture of Electronics Components

The present study urges a dramatic increase in the utilization of computerization and automation in nearly every conceivable future NASA mission. It is likely that a nonterrestrial source of computers and robots eventually will prove both useful and cost-effective in space. The team analyzed currently available and anticipated electronics components manufacturing technologies to determine which will satisfy two major criteria: (1) compatibility with a low- or zero-g factory environment, and (2) possibility of deriving required consumables from lunar resources.

Key components in computer systems include integrated circuits (ICs), capacitors, resistors, printed circuit (PC) boards, and wire. Fabrication capability in these five critical areas will permit most other necessary components to be produced as well. For instance, an IC fabrication facility could manufacture at least some varieties of transistors, diodes (rectifiers, small-signal, and zener), varactors, thyristors, silicon-controlled rectifiers (SCRs), and others. It would, however, have difficulty producing light-emitting diodes (LEDs) due to the scarcity of gallium and arsenic on the Moon. Thus, the intent of the following analysis is to present feasibility arguments concerning how lunar materials near-closure might generally be achieved. Substitution and comprehensive manufacture of electronics components are beyond the scope of the present study. Even with this limited review, it is encouraging to note the number of instances in which space equals or is superior to terrestrial factory environments for the manufacture of electronic components.

Integrated circuits. Conventional wafer fabrication techniques (Oldham, 1977) are, for the most part, not feasible in a lunar-supplied SMF. On the other hand, the vacuum of space greatly enhances the applicability of several techniques which are at or beyond the current terrestrial state-of-the-art.

Silicon (chemical refining required) is plentiful on the lunar surface, about 20% by weight (Phinney *et al.*, 1977). While it is not clear precisely how lunar silicon will be transformed into boules of the pure element, it is reasonable to assume that this can be accomplished. Hard vacuum should facilitate the processes of crystal-pulling and zone-refining purification of elemental silicon (Grossman, 1976). Conventional zone refining requires induction heating (Grossman, 1976; Manasse, 1977), a space-compatible technique.

High-speed ICs using silicon-on-sapphire (SOS) technology are currently being fabricated by Hewlett-Packard (Pighini, personal communication, 1980) and others for custom applications. Should it appear desirable to produce such high-speed devices in the SMF, it is worth noting that spinel is plentiful on the Moon. Spinels are closely related to sapphire and actually provide a better crystallographic match to silicon, leading to higher mobility and less aluminum autodoping than in conventional SOS processing (Glaser and Subak-Sharpe, 1977). (The only major problem with spinel is the difficulty of finding high-quality crystals of correct composition.) Epitaxial growth of silicon on spinel substrates may be accomplished by the pyrolysis of silane (Glaser and Subak-Sharpe, 1977) according to:

$$SiH_4\ (gas) \xrightarrow[(1300\ K)]{} Si\ (solid) + 2H_2\ (gas).$$

Hydrogen is in short supply on the Moon, roughly 0.01% by weight (Phinney *et al.*, 1977), but fortunately only small amounts of it are required in this procedure. Silane is also an intermediate product in the chemical refining scenario described by Waldron *et al.* (1979).

Conventional photolithography and diffusion techniques are not feasible for space electronics fabrication. Many of the required chemical elements are present in lunar soil only at the ppm or ppb level. Photoresists consist largely of hydrocarbons, substances whose atoms are rare and which deteriorate rapidly in the space environment. The best alternatives may be laser, electron beam, and ion beam technologies. It is anticipated that these methods could lead to greater reliability on an increasingly miniaturized scale, particularly under the high-quality vacuum conditions characteristic of space (Carter and Grant, 1976).

Ion implantation already has begun to supplant diffusion techniques in the practices of many semiconductor firms. This technology allows greater control over quantities of impurities introduced, depths and widths of doped volumes, concentration gradients, etc. Of particular interest for a future wafer fabrication plant in space is the potential for computer-controlled, maskless, multilayer implantation of multiple device types with submicron geometries (Namba, 1975; Wilson and Brewer, 1973). While further research and development must be conducted to translate this tremendous potential into practical reality, other features of ion implantation make it a highly desirable interim choice. Masking may be accomplished by aluminum or other metals, passivation layers, resists, etc. Doping also is possible using passivation layers, an approach which could lead to reduced leakage and better yields (Wilson and Brewer, 1973).

One drawback to ion implantation is crystal lattice damage. A recently developed technique permits extremely localized annealing by laser beam (Tebo, 1979). This process, unlike its thermal annealing predecessor, completely restores damaged crystalline structures through epitaxial regrowth. The net result is a lower resistivity material more suitable for semiconductor use, with fewer defects and higher yields. If this laser technique can be computer-controlled like the multilayer ion process described earlier, automated production of three-dimensional integrated circuitry in space is entirely conceivable.

Pre-3D wafer technologies adaptable to more conventional production sequences also are available. Chemical and plasma etching processes require chemicals (e.g., HF, H_2SO_4, CF_4-O_2) which cannot conveniently be supplied in sizable quantities from lunar soil. A feasible substitute may be ion beam etching. While the closely related process of sputter-etching requires high-pressure argon gas, ion-beam etching at the rate of 10-300 nm/min can be achieved in a 10^{-4} torr argon atmosphere (Glaser and Subak-Sharpe, 1977). Titanium oxide is a suitable etch mask for this process. Argon and titanium are available from lunar sources (1 ppm and 1-5%, respectively) in the necessary quantities.

One chemical vapor deposition technique is perfectly space-compatible. An electron beam easily evaporates materials such as aluminum *in vacuo*, so metal masking and metallization pose no unusual problems. Oxidation of silicon for masking or passivation purposes probably is most easily achieved thermally using anhydrous oxygen gas, rather than chemical vapor deposition methods which require hydrogen compounds. An alternative oxidation process might involve the use of a laser to create extremely localized heating (Tebo, 1979). Aluminum and oxygen are plentiful in lunar soil (5-14% and 40-45% by weight, respectively).

One final critical issue is cleanliness. Particulates should pose fewer problems in space than on Earth because of the absence of atmosphere for convective transfer. An aperture in the fabrication facility enclosure opposite the SMF velocity vector, suitably baffled, should provide a clean vacuum source. Some versions of such orbital devices are called molecular shields, and can provide less than 10^{-14} torr environments at LEO. Internally, moving parts and outgassing are probable sources of particulates which must be minimized (Naumann, personal communication, 1980). Condensibles may prove a bigger cleanliness problem than particles. Techniques for coping with them include avoiding line-of-sight exposure to sources, use of materials with high vapor pressures, and installation of cold traps.

Capacitors. Basic elements of discrete fixed capacitors include metal plates or foil, dielectric material, and wire leads. The plates or foil and leads can be contrived from readily available aluminum. Alumina, silica, and a variety of glass and ceramic materials provide suitable dielectrics. All of these substances are readily available from lunar sources.

Two capacitor fabrication techniques – thin- and thick-film – are compatible with silicon integrated circuit technology, though discrete capacitors generally are preferred over thick-film versions (Glaser and Subak-Sharpe, 1977). Thin-film capacitors usually are made with tantalum (Ankrum, 1971; Grossman, 1976; Khambata, 1963). However, thin-film capacitors with higher working voltages but lower capacitance and slightly poorer temperature stability can be constructed of alternating aluminum and alumina (or silica) layers over silicon dioxide and the silicon substrate (Ankrum, 1971; Glaser and Subak-Sharpe, 1977; Khambata, 1963). Titanium dioxide is another possible dielectric – its dielectric constant is four times that of alumina (Glaser and Subak-Sharpe, 1977). Maximum capacitance values obtainable using thin-film technology are on the order of thousands of picofarads, and automated laser trimming can produce a high-accuracy (±0.05%) product (Grossman, 1976).

Resistors. Since carbon is a relatively scarce lunar resource, only wire-wound, metal or metal-oxide-film, and semiconductor resistors (Dummer, 1970; Glaser and Subak-Sharpe, 1977) will be seriously considered for use in space applications.

Wire-wound devices are appropriate in applications requiring relatively high power dissipation, such as bleeder resistors in power supplies. Nichrome wire (80% nickel, 20% chromium) can probably be supplied in limited quantities from lunar materials (abundances 0.01-0.03% and 0.1-0.4%, respectively). Titanium, another possibility, is abundant on the Moon, and has a resistivity (42 M ohm-cm) which is approximately half that of nichrome.

However, most resistors used in computer circuitry need not dissipate much power. Thin-film and semiconductor devices appear most promising in this regard. Thin-film resistors are fabricated by evaporation or by sputtering 0.025-2.5 μm of metal or metal alloy onto a substrate of alumina or silica (Glaser and Subak-Sharpe, 1977; Grossman, 1976; Khambata, 1963; Manasse, 1977). While some metallic materials commonly used in resistor manufacture are too rare in lunar soil for serious consideration (e.g., tantalum, nichrome, tin oxide, chromium), titanium offers a sheet resistance of 2 k-ohms/cm^2 and a temperature coefficient of resistance (TCR) of -100 ppm/°C (Ankrum, 1971; Dummer, 1970; Grossman, 1976; Khambata, 1963). Thus, the electron-beam evaporation and laser-beam trimming technologies discussed above may be utilized to prepare fine-tolerance, thin-film titanium resistors (Glaser and Subak-Sharpe, 1977; Grossman, 1976; Khambata, 1963; Manasse, 1977). At present it is unknown how closely these technologies can approach contemporary terrestrial tolerance and manufacturing standards (better than ±0.005%, TCR = 1 ppm/°C; Rothschild *et al.*, 1980).

Semiconductor resistors can be made with a technology already discussed. Ion implantation of boron into silicon produces sheet resistances of up to 12 k-ohms/cm^2, suggesting that high discrete values are readily achievable. While less precise than their thin-film counterparts, ion-implanted semiconductor resistors have been shown to offer yields on the order of 90% after packaging (Wilson and Brewer, 1973).

Printed circuit boards. Printed circuit (PC) boards are made of phenolic resin reinforced with paper, or an epoxide resin reinforced with paper or fiberglass cloth, which is then clad with copper (Coombs, 1979; Scarlett, 1970). Unfortunately, resins deteriorate in space and are difficult to prepare from lunar resources; also, copper is rare on the Moon (8 to 31 ppm by weight; Phinney *et al.*, 1977). A new approach to PC board manufacture is necessary. Two possibilities are basalt rock slabs and silane-coated basalt fibers (Green, personal communication, 1980). Basalt is an excellent insulator and can be drilled and aluminized to form an etchable conductive surface (Green, personal communication, 1980; Naumann, personal communication, 1980). Boards made of silane-coated basalt fibers would be lighter and easier to drill, but it is unknown whether aluminum can be vapor deposited onto such a surface. If evaporation problems should arise, a thin layer of titanium could serve as an excellent deposition primer (Glaser and Subak-Sharpe, 1977). Ion beam etching might be used selectively to remove aluminum to form any desired circuit pattern. This process is likely to be amenable to precision computer control.

Wiring. The lunar availability of aluminum will permit its widespread use as a conductor for PC board claddings and for all space wiring in general. Its low resistivity (2.8 μohm-cm) compares favorably with that of copper (1.8 μohm-cm), and it readily forms a protective anodic oxide upon exposure to air (Glaser and Subak-Sharpe, 1977). The major terrestrial drawback to aluminum conductors is their incompatibility with conventional soldering and welding methods (Glaser and Subak-Sharpe, 1977). Fortunately, the preferred welding techniques for use in space (see section 4.3.1) should bond this metal nicely. Basalt or glass fibers are possible materials for sheathing aluminum wire (Green, personal communication, 1980), and Miller and Smith (1979) have devised a space-qualified wire insulation wrapping machine.

Before leaving the topic of aluminum wire, it should be noted that high-quality inductors also may be made of this material. One class of inductors – transformers – represents a particularly important component of many computer systems. Iron is plentiful on the Moon (4-15% by weight; Phinney *et al.*, 1977) so transformer cores present no serious problems for the proposed electronics components fabrication facility.

4.4.4 Complex products

The ultimate goals of the SMF are independence from terrestrial resupply, *in situ* production of all components needed to maintain and expand existing space facilities, and the manufacture of high-value products for consumption on Earth (fig. 4.18). Following deployment of the initial starting kit and manufacture of second-generation tools, development of a product line of ever-greater complexity must occur if the ultimate goals are to be attained. The evolution of complex product manufacturing is outlined below with a focus on just a few important potential products typical of each stage of increasing production sophistication.

Platforms. Expansion of the SMF requires a concomitant enlargement of the facility platform. Such construction represents an early evolutionary threshold, a step requiring little materials processing innovation with some advancement in robotics capability. Component parts may be manufactured from cast or sintered basalt or from aluminum beams, any of which could be produced by the initial starting kit and second-generation tools embodying a synthesis of advancements which already have occurred in

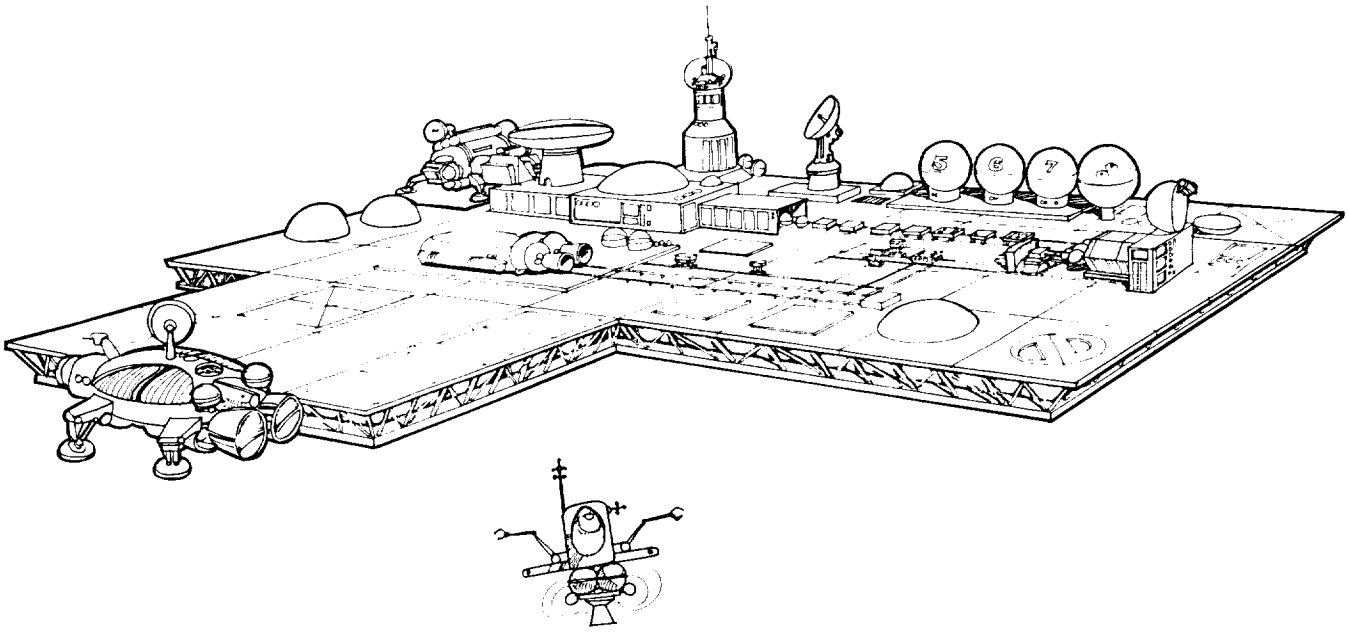

Figure 4.18.– An advanced Space Manufacturing Facility (SMF).

industrial automation and mobile autonomous robotics (Leonard, 1980; Lovelace, personal communication, 1980). Robot mobility studies by the Vought Corporation for Marshall Space Flight Center indicate that construction of space platforms is within the grasp of state-of-the-art automation technology. For instance, robot-compatible fasteners have been developed (Borrego, 1977) and deployed in simulation studies at Langley Research Center (Lovelace, 1980).

Pure glasses and synthetic crystals. The manufacture of complex products containing sophisticated electronic specialized materials may require the preparation of pure glasses and synthetic crystals. Production steps that need to be developed include material separation and sophisticated materials processing.

Consider, for example, the manufacture of synthetic quartz semiconductor materials. Plagioclase first is separated from lunar soil by electrophoresis or other techniques. The refined mineral is then fused and its chemical composition altered to induce quartz to crystallize from the cooling solution. Successful fractionation of quartz from an altered plagioclase melt requires significant advances in the techniques of controlled nucleation, crystallization, and zone refining. Development of a special materials-production capability will permit the manufacture of space-made solar panels, solid-state lasing crystals, fiber optics, and perhaps solar sails. New terrestrial materials techniques such as quick-freezing of molten metals to make "glassy metals" (Giuse and Guida, 1980) may find extensive use in space or on Earth.

Satellites. In-space production of satellites will require the manufacture of special components for control, observation, and communication, and a significant evolutionary advance in automation technology. Satellites may represent the first highly complicated, coordinated construction challenge to be undertaken entirely by teleoperators or robots in space. The construction of solar-power panels, antennas, and sophisticated computer control and communications modules demands a versatile new manipulator system. This system should be equally adaptible to the high-resolution construction tasks necessary in computer assembly and the lower-resolution, high-spatial-range construction jobs required for the assembly of hulls, antennas, and solar panels. Current capabilities of automated assembly are not yet sufficiently well-developed to enable construction of a complete satellite from its constituent parts (Holland *et al.*, 1979; Leonard, 1980; OAST, 1980; Vought Corporation, 1980).

Robots and teleoperators. Two of the most important advanced products to be manufactured in space are robots and teleoperator mechanisms. The ultimate goals for SMF cannot be attained without a significant expansion of the automation equipment initially deployed from Earth. Space robots and teleoperators eventually must be designed from working experience following initial deployment of the starting kit, and then manufactured in space. These second- and third-generation devices must be far more versatile and fault-tolerant than present-day machines. Logistics requirements for production of equipment of this complexity are

staggering. The design must incorporate new features based on earlier experiences with robots and teleoperators in space facilities, and should include either a high degree of self-preservation "instinct" or else a highly adaptive servo-feedback system using extensive space computer facilities as decisionmakers.

The manufacture of robots and teleoperators in space necessitates the automated production of intricate component parts, a task of far greater complexity than current automated assembly systems can handle (Hart, personal communication, 1980). Automated assembly of advanced devices is perhaps no more difficult than the automated assembly of satellites, which already will have been accomplished during an earlier phase of SMF evolution. The most crucial technologies to be developed for the manufacture of second- and third-generation robots and teleoperators are space-adaptive sensors and computer vision. The current state of machine tactile and vision sensor research is insufficient for sophisticated space robots and automated assembly operations (Holland *et al.,* 1979). The best computer-vision package currently available, CONSIGHT-1, can determine the position and orientation of a wide variety of parts with preprogrammed specifications (Holland *et al.,* 1979). Enhanced decisionmaking and self-preservation features must be added to computer-vision systems such as CONSIGHT-1 for use in space robots and teleoperators. A dedicated computer for teleoperator control, programmed to make decisions based on previous experience and insight, would be an instrumental achievement requiring levels of heurism and hypothesis formation unavailable in present-day software (Sacerdoti, 1979).

Solar sails. The solar sails briefly mentioned in section 4.3.1 constitute an unusual but provocative complex product which might be manufactured at the SMF. Sails with a design capability of delivering about two 200-ton payloads per year to the heliocentric distance of Mars have been proposed (Drexler, 1980). Assuming that the viability of self-replicating factories has been demonstrated on the Moon by this point in time (see chapter 5), an interesting scenario would involve the transport of 100-ton self-reproducing "seed" machines (Freitas, 1980c; Freitas and Zachary, 1981) from a lunar-source facility to other moons and planets in the Solar System.

Other complex products. A number of complex products representing various evolutionary steps not yet mentioned or discussed might include impulse landers, biological products, storage tanks, mobile rovers, nuclear-power stations, agricultural products, and many others integral to the evolution of a complex products manufacturing capability. The time sequence of these steps is a function of the desired technologies which must be developed at one stage and integrated at a later stage to make products of ever-increasing complexity.

SMF establishment and growth requires a vigorous parallel development of the three basic materials/energy functions – raw materials and materials processing, manufacturing and technology, and energy production. As the SMF increases in output and creates new net resources, unit output costs should fall and an ever-increasing array of commercially interesting products and services will come into existence. Figure 4.19 and table 4.23 illustrate some of the higher-order systems and services which might be expected ultimately to develop.

4.5 Automation and Manufacturing Technology Requirements

To realize the full potential of space manufacturing, a variety of technological development programs should be initiated in the near future. It is strongly recommended that NASA focus research attention on improvements in teleoperation and robotics, automated manufacturing techniques, and advanced materials processing.

Space manufacturing efforts will draw heavily on teleoperation at first, gradually evolving over many decades towards the extensive use of autonomous robots. Additional research in teleoperation is needed immediately on sensors – tactile, force, and visual, and on sensor and master-slave range scaling. Robotics requirements include improvements in decisionmaking and modeling capabilities, sensors and sensor scaling, mobility, adaptability to hazardous conditions and teleoperator safety (Schraft *et al.,* 1980), natural language comprehension, and pattern recognition. Many of these needs are presently under review by the Engineering Services Division of Goddard Space Flight Center as part of their ongoing CAD/CAM program.

Better automated control systems for space-manufacturing processes are imperative. Machine intelligence controlled laser-, electron-, and ion-beam technologies will make possible the highly sophisticated cutting and trimming operations, integrated circuit fabrication, and other related functions necessary for an efficient SMF operation. Further work should be aimed at devising new fabrication techniques specifically designed for space, such as automated beam builders.

In the materials processing area, effective use of undifferentiated materials such as cast basalt should be stressed. Beneficiation systems better suited to nonterrestrial conditions must be developed to achieve production of differentiated materials with maximum process closure.

4.5.1 Teleoperation and Robotics

Teleoperator development is especially important in the early stages of the space manufacturing effort because the sophistication of current robots in sensory scaling, adaptive control, learning, and pattern recognition is inadequate to establish an autonomous space manufacturing capability. These skills are embodied as subconscious processes in the

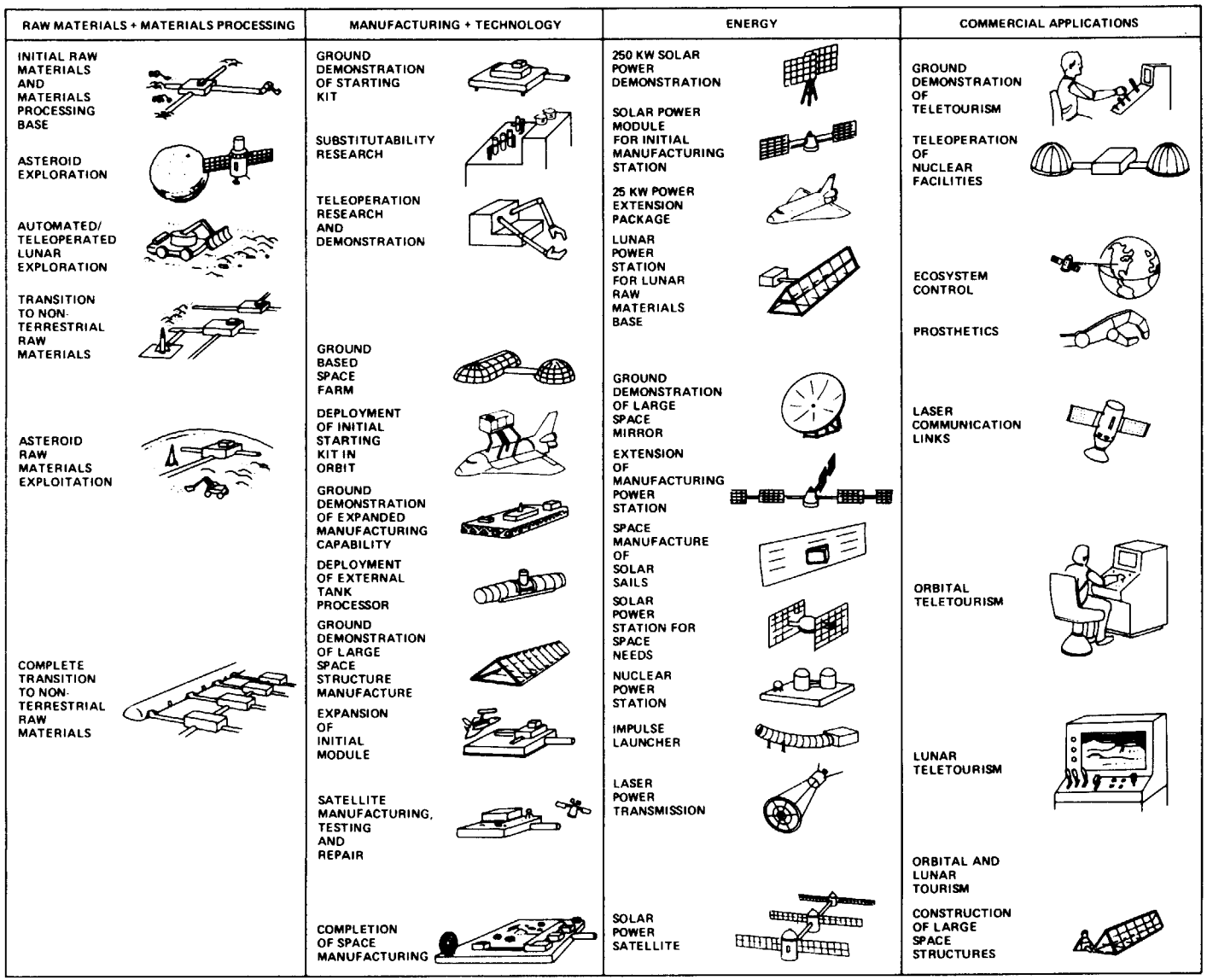

Figure 4.19.– Space manufacturing milestones.

TABLE 4.23.– INTERMEDIATE GOALS IN THE EVOLUTION OF SPACE MANUFACTURING

Raw materials and materials processing
Initial lunar raw materials and processing base– Small processors, soft-landed on the Moon, will extract iron, begin electrophoretic separation of desired mineral phases, and produce silane propellants and oxygen. *Asteroid exploration*– A dedicated telescopic asteroid search will be directly succeeded by exploration of Anteros and other asteroids using rovers and orbiters. *Automated/teleoperated lunar exploration*– Orbital and highly mobile teleoperated or automated rovers will explore the lunar surface (particularly the poles) for possible alkalic basalts and volatiles. The discovery of significant volatiles, especially water, would reduce the complexity of achieving growth and independence. *Transition to nonterrestrial raw materials*– Production of aluminum, titanium, processing chemicals and many other materials will be initiated. This will require a transport system and/or mass-driver facility. This effort will begin with modest goals, later culminating in complete raw materials independence for the SMF. *Asteroid raw material utilization*– Water, carbon, platinum group metals and other materials will be returned to LEO and utilized by SMF. *Transition to nonterrestrial materials completed*– Eventually lunar and asteroidal resources will make a completely independent space economy possible.
Manufacturing and technology
Ground demonstration of starting kit– A ground demonstration of the initial starting kit will be carried out and the development of second-generation tools by the starting kit will be examined. *Substitutability research*– Ground-based research employing simulated lunar and asteroidal materials will be carried out to develop substitute materials for commonly used terrestrial materials which are scarce in lunar or asteroidal soils. *Teleoperator research/demonstration*– Teleoperator research will be directed toward the most sophisticated dextrous operations. *Ground-based space farm*– A small agricultural facility with a closed-controlled atmosphere will be built to examine the feasibility of space agriculture. *Deployment of initial starting kit in orbit*– The deployment, by the Shuttle, of the initial starting kit will be carried out, and second-generation tools will be constructed by the starting kit from Shuttle external tanks. *Ground demonstration of large space structure manufacture*– Large space structures will be manufactured and assembled by teleoperators and robots in a water tank simulator. *Ground demonstration of expanded manufacturing capability*– Second-generation tools will be employed to manufacture and assemble products. The feasibility of third-generation tools for greater manufacturing versatility will be examined. *Expansion of initial module*– With additional feedstock derived from additional external tanks, the manufacturing facility can be expanded from the initial module. *Satellite manufacturing, testing, and repair*– Satellites will be constructed by the SMF mobile units that will refuel existing satellites and modify and test experimental satellites. *Completion of space manufacturing*– At this stage, all products required in space are manufactured from nonterrestrial materials. High-unit-value products may be transported back to Earth.
Energy
250 kW solar power demonstration– A proof of concept demonstration for conversion of solar energy into microwaves and transmission of microwaves to a distant station as usable energy will be implemented. *25 kW power extension package*– The PEP will be deployed in order to enable the Shuttle to remain at the station longer and perform more complex missions. *Solar power module for initial manufacturing station*– This module enables autonomous operation of the initial manufacturing module. This unit is a descendant of the power extension package for the STS. *Lunar power station for raw materials base*– A solar or nuclear power plant will be deployed on the Moon to supply power for exploration, acquisition, and processing of raw materials. This facility will be large enough to allow for transportation of materials to LEO.

TABLE 4.23.– CONCLUDED

Energy – Concluded
Ground demonstration of large space mirror– A proof-of-concept demonstration of manufacture and construction of large space mirrors will be a necessary precursor for the Solaris mission. *Extension of manufacturing facility power station*– The manufacturing power station will be expanded to accommodate the expanded manufacturing capacity. Additional power is required for expanding the acquisition and utilization of nonterrestrial materials. *Space manufacture of solar sails*– Thin-film solar sails, which are difficult to construct on Earth and very difficult to deploy, will be manufactured in space. The solar sails will be employed to transport payloads within the inner Solar System. *Solar power station for space power needs*– An SPS will be constructed to supply electrical energy to stations in space. The power may either be used where it is developed or transmitted over distances to remote stations. *Nuclear power station*– Fission or fusion energy will be employed in those situations where solar energy is impractical. A nuclear power station will be constructed for outer Solar System missions and lunar night power. *Impulse launcher*– A mass-driver reaction engine will be developed and deployed as a part of the materials and products transport system. *Laser-power transmission*– A laser-power transmission system will be developed and deployed. The precise frequency of laser light will enable tuned photocells to be used to convert the laser beam into useful power. *Solar power satellite*– The development of the power station for space use and the laser-transmission system culminates in the development of the SMF solar power station which will be capable of delivering multi-gigawatts of energy for transmission to the Earth.
Commercial Applications
Ground demonstration of teletourism– Development of teleoperators for space might lead to "teletourism." People could "travel" to exotic places via teleoperation. *Teleoperation of nuclear facilities*– Advanced teleoperator technology could eliminate radiation exposures in nuclear facilities by eliminating human operation in dangerous areas. *Ecosystem control*– Enhanced remote-sensing technologies developed in the manufacturing facility could provide monitoring and "fine tuning" of terrestrial ecosystems. *Prosthetics*– Research on advanced teleoperators and robots would greatly enhance the field of prosthetics. Sensory display devices, for instance, might be adapted as aids for blind and deaf persons. *Laser communication links*– High bandwidth laser data links to space and Earth stations will be developed. This will greatly ameliorate the radio band allocation situation. *Orbital teletourism*– High bandwidth communications satellites, manufactured by the SMF, could be employed for orbital teletourism. *Lunar teletourism*– Manipulators and viewers on the lunar surface could provide the ability to develop lunar teletourism. *Orbital and lunar tourism*– Fully reusable Shuttle-derived lift vehicles will permit orbital plus lunar tourism packages. *Construction of large space structures*– Such large space structures as medical centers, space and worldwide communications centers, and hotels would provide a survival capability in the event of a terrestrial catastrophe.

human nervous system. The development of teleoperators with sufficient interface dynamics would provide "telepresence" (Minsky, 1979, 1980) in the early stages of SMF development while significant new robotics research is undertaken.

The team surmises that within the next 50 years robot systems will be capable of handling a large fraction of the needs of a general-purpose SMF. The feasibility of robot systems making sophisticated judgments is less certain. Controls likely will evolve from teleoperated to semiautomated, then to fully automated (Bejczy, 1980). Cost requirements in orbit or on the Moon or asteroids may encourage development of adaptive robots with flexible control systems (Asada and Hanafusa, 1980). According to research currently underway at the School of Electrical Engineering at Purdue University, a limiting requirement may be manipulator motion (Paul *et al.*, 1980). Manipulators in an SMF must be capable of working on a moving assembly line – the maximum "reach" of current Cyro robots is 3 m – and of accepting visual position information. It is also important to determine the degree to which real time computational constraints can be relaxed in controlling robot motions in Cartesian coordinates. In extraterrestrial environments, the dynamic behavior of each link in a manipulator arm must be considered. Centrifugal and coriolis accelerations (in spinning systems) and gravity loading are significant factors governing the relationship between forces and moments of successive links.

Limits on control requirements also have been considered by Yushchenko (1980), who has written algorithms for semiautomatic robot operations. Since semiautomatic robots undoubtedly will precede fully automatic robots into space, the three major techniques of direct human master control – velocity, force, or position – must be considered. Velocity methods are rapid but manipulator motions are imprecise. Force methods control manipulators through human feedback in Yushchenko's study, but these techniques provide little regulation of acceleration during object motion. Limitations in force-sensing controls for mating of parts have been reviewed by Korolev *et al.* (1980) and by the Draper Laboratories, the latter quantifying clearance and friction factors. The positional method ensures proportionality of linear and angular displacements of manipulator grip through the handle of a master control device.

Manipulators need to be greatly improved. Current master-slave devices require 2-3 times longer to accomplish a given task than do human hands (Bradley, personal communication, 1980). The mass of teleoperator appendages is high compared to the weight they can lift. With better visual and tactile feedback, the heavy, rigid manipulator arms could be replaced by lightweight, compliant, yet strong arms. To accomplish this, the low-resolution, low-stability, low-dynamic-range force reflection tactile systems must be replaced with servofeedback systems including suitable touch display modules. Viewing systems will require additional research and development – the most advanced system currently available is a monocular head-aimed television. This system should be redesigned as a binocular system with auto-focus, variable resolution, and color. Sensory scaling to compensate for differences in size between slave and master manipulators is necessary for fault-tolerant teleoperation. This may be accomplished by adjusting the scale of the master visual image or by incorporating error signals into the visual display.

Limitations also arise by virtue of the space environment itself, whether in LEO, on the lunar surface, or on asteroids. Hard vacuum demands redesign of robot joints and manipulator end-effectors to minimize undesired cold welding if de-poisoning of metal surfaces occurs. Radiation bursts during solar flares could possibly induce embrittlement of metal components of automata. Likewise, electronic components could be degraded or altered by temperature extremes.

4.5.2 Functional Requirements for Automation

The functional requirements for an automated SMF, taken in part from Freitas (1980d), are listed below roughly in order of increasingly sophisticated capability: robot language systems, product assembly, product inspection and quality control, product modification, product repair, product adjustment, product improvement, remedial action by reason of emergency or subtle hazard, robot self-replication. It is assumed in each case that the impediments to meeting these requirements (e.g., control techniques, "packaging" to withstand hostile ambient environments, etc.) will somehow be overcome. The first three functional requirements are described briefly below, followed by a general discussion of the more advanced requirements.

Robot control languages. Numerous machine languages exist for the control of semiautomated machine tools (Lindberg, 1977). These include APT (automatic programming tool) and ICAM (integrated computer aided manufacturing). McDonnell Douglas Aircraft Company has recently extended APT to MCL (manufacturing control language) in order to program a Cincinnati Milacron T3 robot to rivet sheet metal. Higher-level robot control languages, obvious requirements for advanced automated space systems, include VAL (versatile assembly language) for the Puma robot and "HELP" for the Pragmac robot (Donata and Camera, 1980). The problem of extending high-level languages from comparatively simple machine tools to more sophisticated multiaxis integrated robot systems which may be found in future automated space factories must be viewed as a top priority research item.

Product assembly. At SRI International, requirements for the five basic operations in factory assembly have been evaluated by Rosen *et al.* (1976). These include (1) bin picking, (2) servoing with visual feedback, (3) sensor-controlled manipulation, (4) training aids, and (5) manipulator path control.

The team has recognized the need for improved performance in bin picking of, say, assorted cast basalt and metal objects. Multiple electromagnetic end-effectors certainly could pick out just the metal casings. Variably energized end-effectors might be used to separate and select metal parts of varying magnetic susceptability randomly arranged in a bin (i.e., aluminum vs iron vs titanium parts). But general bin picking from random parts assortments is not yet possible, though it might be essential in a fully automated SMF operation.

SRI has applied visual servoing by combining a General Electric television (100 X 100 element solid-state) camera with an air-powered bolt driver incorporated into an end-effector. Three-dimensional cameras may be required for highly contoured objects fabricated in space (Agin, 1980; Yachida and Tsuji, 1980). Such cameras have already been applied to automated bin selection tasks by the Solid Photography Company in Melville, New York.

Computer-vision technology needs to be merged with discoveries from biological studies. Automatic gain control, gray-scale imaging, and feature detection must be included in computer-vision technology if robot autonomy is the goal. Parallel computer-control systems will ensure the speed of reaction and self-preservation "instincts" required for truly autonomous robots, but will require a decrease in existing computer memories both in size and access time by several orders of magnitude. Consideration should be given to associate and parallel memories to couple perceptions to the knowledge base in real time.

To achieve sensor-controlled manipulation, somewhat greater precision is required of robot arms than can be obtained now. Present-day Unimates (control arm precision of 2.5 mm) have been used in a one-sided riveting operation using strain-gauge sensing of the rivet gun mandrel, but there is still a need for more rapid finding, insertion, and fastening by passive accommodation, servo adjustment, and search algorithms. A novel "eye-in-the-hand" adaptation for rapid assembly in space may utilize acoustic sensors. The Polaroid Corporation in 1980 applied its camera ranger to end-effectors for tool proximity sensing. The unit emits a millisecond pulse consisting of four ultrasonic frequencies (50, 53, 57, and 60 kHz). Ultrasonic techniques are potentially quite useful in air or other fluid-filled bays in nonterrestrial manufacturing facilities, especially in view of the acoustic positioning systems developed by the Jet Propulsion Laboratory for containerless melt manipulation. Under vacuum conditions when precise positioning is necessary, laser interferometry may provide the answer (Barkmann, 1980).

Regarding training aids, more sophisticated coordinate transformation programs are required to operate manipulators for diverse tasks. A possibility for the future is "show and tell," a new technique for robot training (see chapter 6). Ultimately, a robot itself could train future-generation machines through some means of "training-by-doing." A related issue – the problem of robot obsolescence – will not be trivial.

Finally, manipulator path control should be fully automated in SMF where, for example, rock melts must be transported along smoothly controlled paths (see the discussion of basalt fiber spinning in section 4.2.2). In the manufacture of bearings or fibers where high-speed trajectories are involved, manipulator halts at corners must be avoided by developing better path control strategies. In the near-term, it may be possible to extend the capabilities of the Unimate:PDP-11/40 couple. For every machine proposed for the SMF, including the starting kit extruder, it is simplest to use a coordinate system based on that machine to interact with robot manipulators continuously to redefine forbidden regions and motions. Thus, a major requirement in robot factory assembly is to specify the coordinate systems of the component machines.

Product inspection and quality control. The need for visual methods of inspection and quality control by automata must be defined for each class of SMF product envisioned. For instance, the application of electroforming on the Moon to produce thin-walled fragile shapes, aluminum ribbon extrusion, or internal milling of Shuttle tanks, definitely demands inspection and quality control. Terrestrial automated inspection systems currently are in use at General Motors, Western Electric, General Electric, Lockheed Recognition Systems, Hitachi Corporation, SRI International, and Auto-Place Corporation. A detailed synthesis of the vision requirements for each is given by Van der Brug and Naget (1979). Off-the-shelf television systems with potential for robotics applications already provide measurements to 1 part in 1000 of the height of the TV image, e.g., the EyeCom Automated Parts Measurement System manufactured by Special Data Systems, Inc. in Goleta, California. Finally, the use of fiber optics in quality control, as demonstrated by systems now in use by Galileo Electronics, Inc., warrants further development.

Advanced functions and recommendations. The needs of space manufacturing for automated product modification, repair, adjustment and improvement, as well as robot adaptation to emergencies and self-replication, depend in large part on the capabilities of future automata control systems and the environment in which they are applied. The hazards of space to human beings are well known, whereas their impact on robot systems is less well understood. Potential dangers include rapid pressure changes, spillage of corrosive fluids or hot melts due to vessel rupture, radiation effects

from solar flares (e.g., embrittlement), anomalous orbital accelerative perturbations producing force-sensor errors, and illumination-intensity variations caused by space platform tumbling or nutation (producing visual observation problems such as shadow effects in fiber optics sensors).

Robotic intelligence must be vastly increased if these devices are largely to supplant human workers in space. This may be accomplished by deploying a versatile intelligent multipurpose robot or by developing a number of specialized, fixed-action-pattern machines. Multipurpose intelligent robots lie well beyond state-of-the-art robotics technology, yet they still are an important ultimate goal. In the interim, sophisticated fixed-action-pattern robots suitable for restricted task scenarios should be developed. The behavior of such robots would be not entirely different from that of many plants and animals endowed with very sophisticated fixed action patterns or instincts.

Before true machine intelligence can be applied to factories in space, the requirements for automated nonterrestrial manufacturing systems must be determined by an evaluation of the state-of-the-art in this field. A complete and updated computerized library containing abstracts of all available robotics research and applications publications, accessible through ARPANET, should be implemented to enhance automation technology transfer. Among the subject categories which should be emphasized are controls, arm/work envelopes, robot adaptability, applications, and costs. Knowledgeability in the field requires contact with firms listed below to better understand how solutions of the practical problems of today can be extrapolated to help solve those of tomorrow: Unimation, Inc.; Cincinnati Milacron; ASEA, Inc.; Prab Conveyors, Inc.; Planet Corporation; Devilbiss/Trallfa; Nordson Corporation; Binks, Inc.; Thermwood Machinery Corporation; Production Automation Corporation; AutoPlace Company; Modular Machine Company; Seiko Instruments, Inc.; Jones Oglaend Corporation; Fujitsu Fanuc Corporation; Okuma Machinery Corporation; Advanced Robotics Corporation; Hitachi Corporation; and Benson-Varian Corporation.

4.5.3 Space Manufacturing Technology Drivers

The successful deployment of a large, growing, independent SMF requires technologies not presently available. Three technical areas in particular will require major developmental efforts: manufacturing technologies, materials processing, and space deployment. Many of the technology drivers and required advancements discussed previously are currently the subject of some R&D activity at various industrial and government research facilities. The first and perhaps most crucial step in any technology drive to make the SMF a reality is a thorough synthesis and coordination of current and previous research. A determined effort must then be made to augment technical competence as required to sustain a successful space manufacturing venture.

Manufacturing technologies. The control system for an automated manufacturing facility must be sophisticated, fault tolerant, and adaptive. Technological advances required for a factory control system are primarily software developments. A "world model" for the facility must comprehend variable throughput rates, breakdowns, and unexpected commands from Earth-based supervisors. The control system also must be able to formulate and execute repair plans, retooling exercises, and scheduling options. Such a system needs flexible hypothesis formation and testing capabilities, which in turn demands heuristic programming employing some measure of abductive reasoning without requiring unreasonably large memory capacities (see sec. 3.3).

Advances in ion-, electron-, and laser-beam technologies are necessary for welding, cutting, sintering, and the fabrication of electronic components. The efficiency and power of weapons-grade tunable lasers now under development by Department of Defense contractors (Robinson and Klass, 1980) already are high enough to fulfill most cutting and sintering needs of the SMF. Heat dissipation is a substantial problem inherent in laser utilization for space manufacturing. Space-qualified heat exchangers must be developed for laser-beam machining to achieve its full potential as a viable macromachining space technology. In addition, industrial lasers must be designed to re-use the working gases.

In the manufacture of electronics components, ion-beam devices are required for implantation and etching in space. Lasers are helpful in facilitating annealing and oxidation processes and in trimming fine-tolerance capacitors and resistors. Electron beams have applications in silicon crystal purification and deposition of metals, though lasers also may be employed. Other uses for each beam type are readily imaginable. High-resolution automated control technologies must be developed for implantation, annealing, etching, and trimming processes in particular.

Contact welding is a highly useful feature of the vacuum space environment. Of course, in some instances cold welding must be avoided so surface poisoning methods must be developed. Terrestrial poisoning agents such as hydrogen, hydroxyl, and various surfactants are not readily produced from nonterrestrial materials. Highly adsorptive oxygen-based surface active agents appear to be the most feasible solution to the cold welding problem.

Materials processing. Extensive research is needed in the field of processing of raw materials if a self-sufficient space manufacturing presence is to be established. Several possible avenues include fractionation, zone refining, and oxygen-based chemical processing. Fractionation of a wide variety of elements including fluorine, hydrogen, silicon, boron, phosphorus, and many others is a prerequisite to

independent manufacturing in space. Raw material separation prior to processing (primary beneficiation) is a logical step in the total beneficiation process. The preliminary isolation of particular compounds or mineral species could significantly reduce the problems inherent in developing suitable chemical-processing options.

Space deployment. There are a number of mission tasks associated with space manufacturing for which technological developments must be made. Sophisticated rendezvous techniques are needed for SMF resupply, in-orbit assembly, and satellite tending. Deployment of repair rovers is required for satellite maintenance and troubleshooting. Long-term satellite autonomy is not possible without repair and refueling capabilities which are not currently available. Large-mass deployment and retrieval procedures must likewise be developed if feedstock, raw materials, and products are to be delivered to or from the SMF. Multimission compatibility must be designed into satellites, shuttles, and transport vehicles if self-sufficiency is to be achieved within a reasonable time.

4.5.4 Generalized Space Processing and Manufacturing

A generalized paradigm for space industrialization is presented in figure 4.20. Solar energy powers the systems which gather nonterrestrial materials for conversion into refined materials products. These "products" can be additional power systems, materials gathering/processing/manufacturing systems, or simply support for other human and machine systems in space. Earlier chapters examined observational satellites for Earth and exploration systems for Titan having many necessary features of a generalized autonomous robotic system designed to explore the solid and fluid resources of the Solar System (item (1) in fig. 4.20) using machine intelligence. However, in the materials and manufacturing sectors a qualitatively new interface must be recognized because "observations" explicitly are intended to precede a change of objects of inquiry into new forms or arrangements. These machine intelligence systems continuously embody new variety into matter in such a way that preconceived human and machine needs are satisfied. This "intelligently dynamic interface" may be explored as two separate notions: (1) a generalized scheme for materials extraction, and (2) the (fundamentally different) generalized process of manufacturing (see also chap. 5).

Generalized materials processing system. Figures 4.21 and 4.22, developed by R. D. Waldron (Criswell, 1979), offer a very generalized overview of the options and logic involved in the selection of a processing system for an arbitrary raw material input. By way of illustration, note that the extraction (in either reduced or oxide form) of the seven most common elements found in lunar soils requires

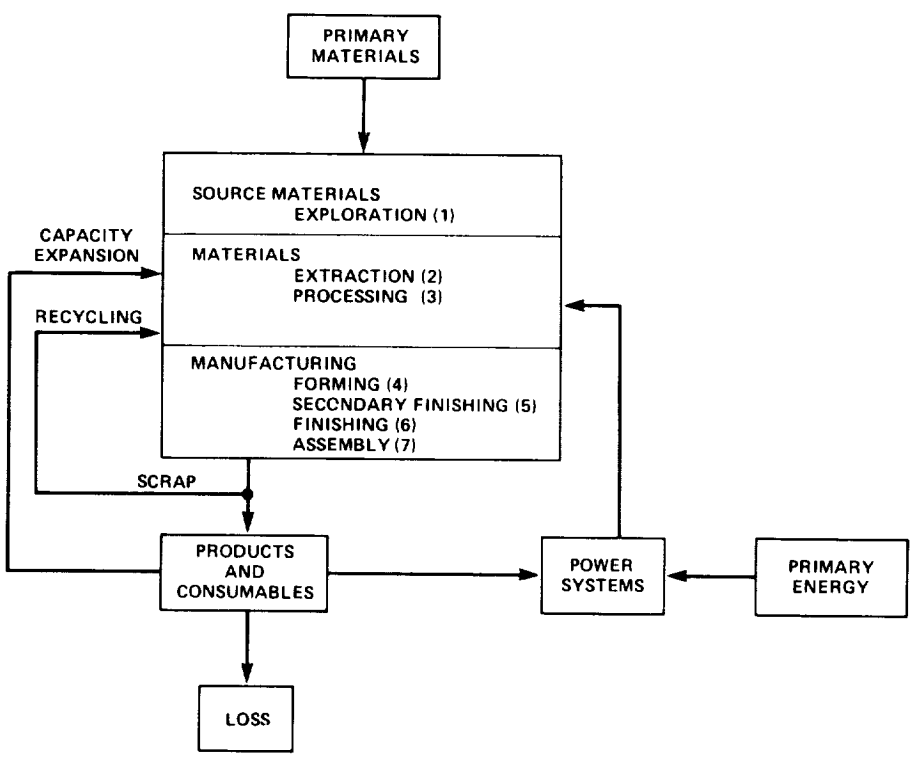

Figure 4.20.– A generalized paradigm for space industrialization.

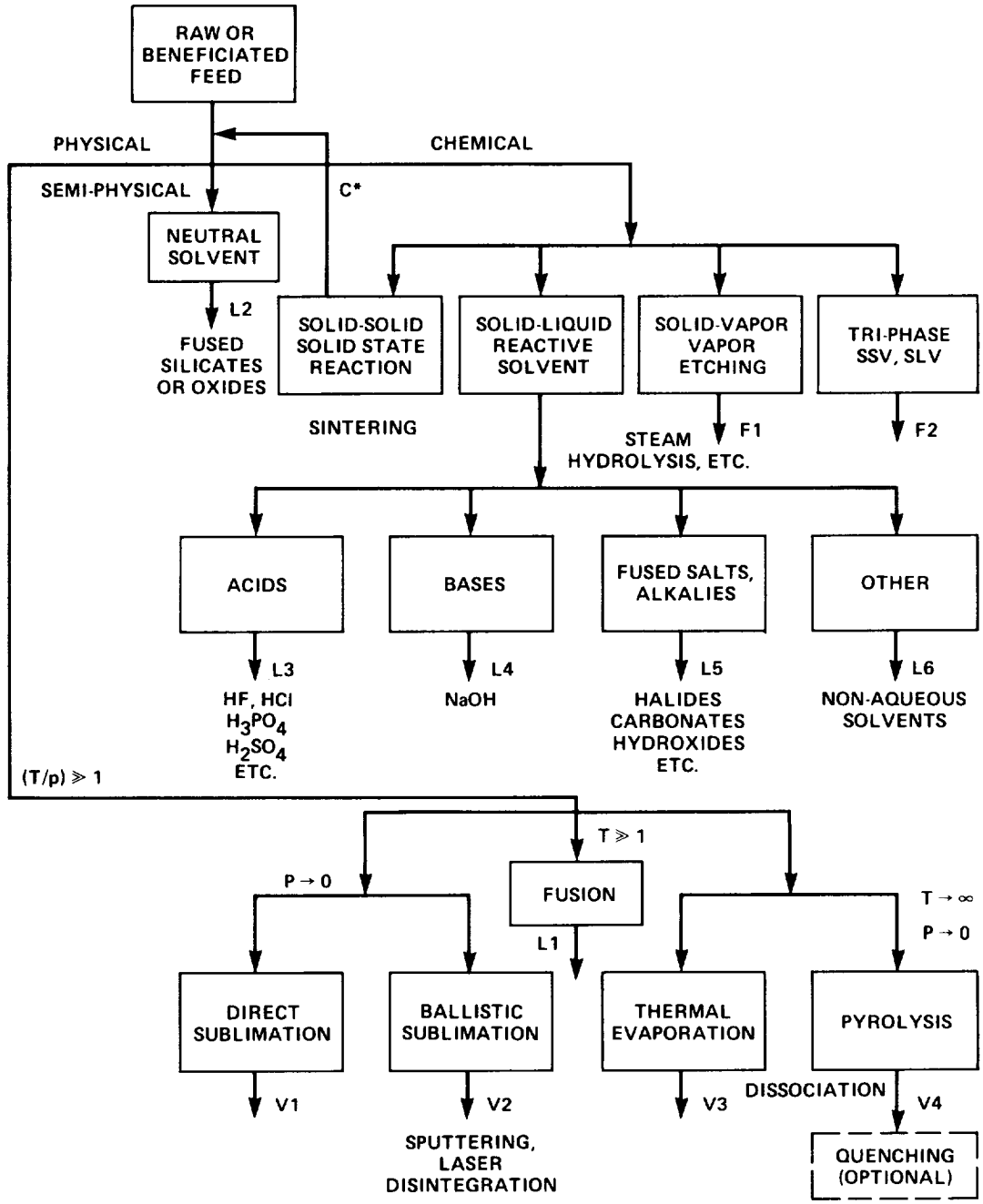

Figure 4.21.– Mobility/diffusibility materials processing options.

at least six separation steps, with yet additional steps for reagent recycling. Even if a single separation technique from each of the 22 categories shown in figure 4.21 is considered for each of the six lunar elements, more than 113,000,000 combinations (22^6) of separation segments would be possible. The 13 categories of mobility/diffusibility options further increase the total number of process variations available.

Clearly, an enormous range of materials-processing alternatives can be indexed by a finite number of decision nodes. One might imagine a very large, complex, but finite extraction machine comprised of 35–40 process categories, each capable of performing an operation described in figures 4.21 or 4.22 (e.g., ballistic sublimation, liquid-solid absorption/ion exchange). In addition, each category subsystem is capable of fully monitoring its own input, internal, and output materials streams, and environmental or operating conditions, and must have access to detailed knowledge of relevant data and procedures in chemical engineering, physics, and the mathematics necessary to

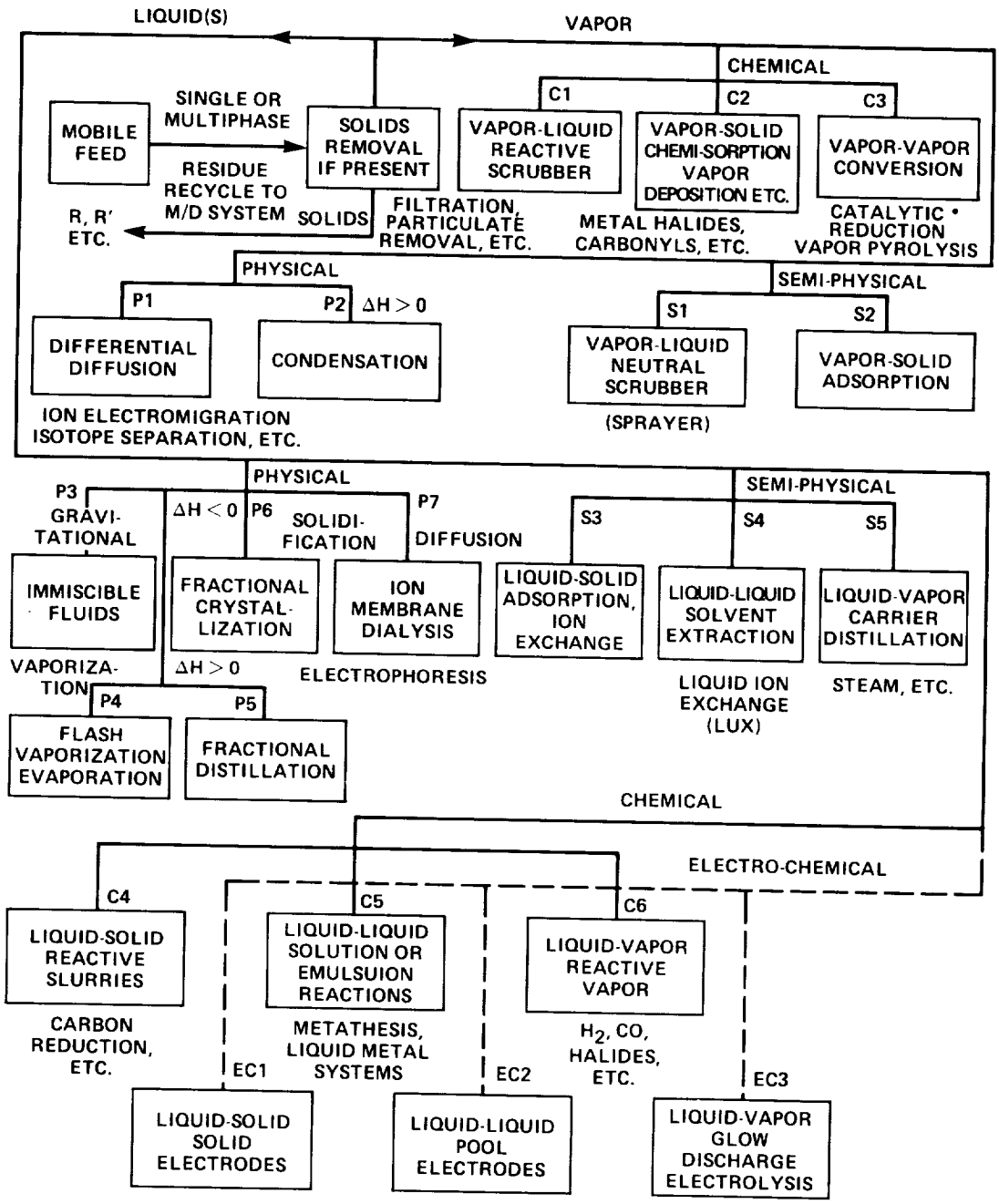

Figure 4.22.– Separation materials processing options.

maintain stable operation or to call for help from an overview monitor system. Each processing subsystem communicates extensively with an executive system to select process flows consistent with external factors such as available energy, excess materials, local manufacturability of process components, necessary growth rates and the general environment.

During deployment, the complete package is delivered to a materials source. Representative local raw materials are sampled to select appropriate overall processing options. After selection is made, throughput rates in the process stream are upgraded to full production levels. Output materials are delivered to a generalized manufacturing system which builds larger specialized production units and support systems such as power supplies, mining, and other materials-gathering equipment, transporters, and related items.

In the most general terms, the Materials Processing System reduces variety in the local environment by absorbing unknown or chaotic resources and producing numerous

output streams of well characterized industrial materials. Variety reduction is accomplished by definite and finite sequences of analytic operations. The analysis task, though large, is finite. The next step, manufacturing, involves the production of possibly an infinite number of forms, hence will likely require different mathematical and computational approaches.

The concept of a self-contained regenerative processing unit affords an interesting didactic tool. What tasks would be required for the unit to manufacture a collection of locally appropriate processing subsystems? What "cognitive structures" are necessary to organize and to direct the activities of the manufacturing units and the 35–45 analytic cells? Further questions regarding possible tasks include:

- What physical operations and observations must be conducted in each process category?
- What equipment types are common to various categories of materials processing, materials transfer, and storage needs?
- What chemicals are essential for the materials processing capabilities desired?
- Have any process categories been omitted?
- What physical knowledge of processing operations must be embedded in directly associated machine intelligence (MI) units?
- What are the necessary relations between extent of exploration observations, initial test processing, and build-up to large-scale processing?
- How many process paths should the overall system physically explore? To what extent, and how, should theoretical understanding and limited observations be used to rule out the vast majority of processing alternatives to permit early focus on adequate production sequences?
- How can new knowledge acquired in operations in new environments and with new compounds be incorporated into the MI system?
- What principles of overall management must the system obey to ensure survival and growth?
- What are the fundamental ultimate limits to the ability of self-regenerative systems to convert "as found" resources into industrial feedstock? Are there any essential elements which limit growth by virtue of their limited natural abundance?
- How can an understanding of physical principles be incorporated into the overall management system to direct operations?

Generalized manufacturing. Figure 4.23 illustrates the generalized manufacturing process. Units 2–8 suggest the flow of formal decisions (along a number of "information transfer loops") and material items which finally result in products. The management unit directs the entire enterprise in response to internal and external opportunities and restrictions. Development of new products requires participation of the entire system, whereas manufacture of repetitive output focuses on providing smooth production flows through units 4–8 guided by management. This schema explicitly refers to the manufacture of "hard products" such as telephones, automobiles, and structural beams, but a generally similar methodology also applies in the preparation of made-to-order chemical compounds. Thus, the reduced chemical feedstock discussed earlier may supply material to logistics (8) for input to manufacturing processing.

Considerable progress in automation and computer assistance have been made in the functional areas of design (2:computer aided design), parts fabrication (4:computer aided manufacturing), logistics (7:computer aided testing), and management support (1). If extension of state-of-the-art practices is focused on space operations, further advancements readily may be visualized in parts fabrication (4: e.g., flexible machining systems), materials handling (5: e.g., automated storage systems and transfer lines, retrieval, parts presentation), assembly (6: e.g., robots with vision and human-like coordination), and inspection and system testing (7: e.g., physical examination using vision, sonics, X-rays, or configuration as when checking computer microchip integrity).

Major additional research is necessary in process planning (3), handling (5), assembly (6), and inspection and system testing (7) in order to fully develop autonomous SMF. Although machine intelligence systems are appropriate in all phases of manufacturing, the most advanced applications will be in management, design, and process planning.

There is a fundamental difference between generalized materials processing and manufacturing. In the former (production of "standardized" industrial materials) the system is designed to reduce variety of originally random or unstructured resources. There are a finite number of chemical elements and a finite but extremely large collection of processes and process flows by which chemical elements may be derived from primary native materials. On the other hand, manufacturing processes presumably can impress virtually an infinite range of patterns upon the matter and energy of the Universe. Substitutions of materials and alternate solutions to various engineering challenges are manifestations of the diversity possible. Parts fabrication is the "materials" focus of manufacturing; as shown in figure 4.23, there are four major steps – parts formation, secondary finishing, finishing, and assembling – with matter flowing generally from one stage sequentially to the next.

Table 4.24 by Waldron (Criswell, 1979) presents a non-inclusive functional taxonomy of manufacturing processes

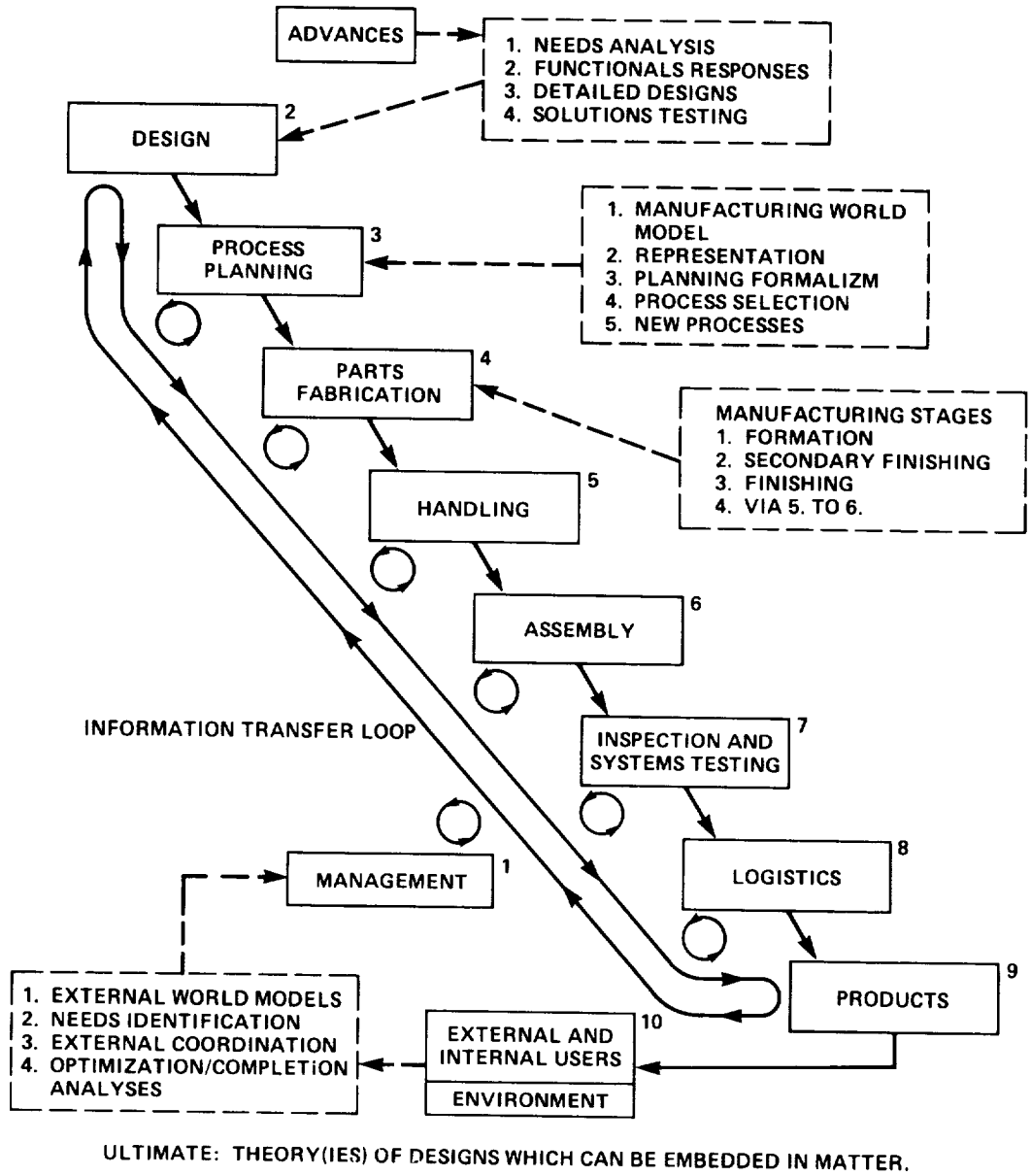

Figure 4.23.– Comprehensive manufacturing schema.

which is organized differently from table 4.17. With few exceptions all may be applied to advantage in one or all of the four stages of manufacturing. Each can be used to produce parts of arbitrary size, form, dimensional accuracy, composition, and other collective properties (e.g., magnetic susceptibility, tensional strength, thermal conductivity, switching speeds), so it is clear that a continuously growing diversity of products is possible. Thus, manufacturing intrinsically requires machine intelligence systems to create novel forms embedded in nonterrestrial materials. In turn, these "matter patterns" might be used to control nonmaterial flows of electric and magnetic patterns, momentum, photons and information – the key to further propagation of new pattern production.

The following is a list of research challenges extending from the broadest issues of "matter patterns" to the present state-of-the-art of machine intelligence as applied to design, process planning, and management units depicted in figure 4.23:

- Creation of world models and methods of identifying "needs" for materials, energy sources, products, etc., which the system must provide for further growth.

TABLE 4.24.– GENERAL CLASSIFICATION OF MANUFACTURING PROCESSES

1. Kinematic
   - K1 Fiber operations (felting, paper, textiles)
   - K2 Particulate operations (mixing, conveying, clustering, dispersing)
   - K3 Fluid operations (mixing, pumping, heating, cooling, phase separations)
   - K4 Discrete operations (small scale assembly)
2. Forming
   - F1 Hot forming (casting, forging, powder metallurgy, sintering, hot rolling, bending)
   - F2 Cold forming (extruding, bending, punching, drawing, machining, grinding, cold molding)
   - F3 Unconventional forming (electromagnetic)
3. Surface treatment
   - S1 Removal (washing, etching, electropolishing)
   - S2 Addition (coating, plating, anodizing)
   - S3 Modification (bonding, hardening, shot peening)
4. Internal treatment
   - I1 Internal heating (resistance, induction, dielectric)
   - I2 Irradiation (X-ray, gamma ray, electron beam, UV)
   - I3 Miscellaneous (magnetic poling, ultrasonic)
5. Bonding
   - B1 Hot processes (welding, brazing, soldering)
   - B2 Cold processes (adhesives, chemical bonding, ultrasonic welding)
   - B3 Unconventional processes (explosive, electromagnetic)
6. Large-scale assembly
   - L1 Reduced gravity (lunar surface)
   - L2 Microgravity (orbital assembly)

- Observational and communications means and strategies by which world models can be extended, compared to external realities, and then needs recognized and fulfillments confirmed.
- Computational strategies for optimal uses of the means of production and the resources for creating new products.
- A method of creating, analyzing, and testing new designs derived from validated theoretical concepts or empirically justified knowledge (i.e., that something works). A similar need exists in the task area of assembly in which knowledge of the desired functions of a device or system can be referred to in the assembly procedure rather than referencing only configurational information or combinatorial blocks in a sequence of assembly steps.
- Some means of representing the resources of a production system and a formalism for process planning tasks.

The scientific and engineering communities continually strive, in a somewhat uncoordinated manner, to develop new comprehensive physical theories and then apply them to the creation of new material systems. A new scientific/engineering discipline is needed which explicitly and systematically pursues the following related tasks:

- Document the historically evolving capability of humanity to impress patterns onto matter, the quality of life as patterning ability becomes more sophisticated, the physical dimensions of pattern impressment, the interaction of new patterns by which even more comprehensive orderings may evolve, and the relationship between physical control over matter-energy and the socially based field of economics.
- Investigate on very fundamental levels the interrelations among information, entropy, negative entropy, self-organizing systems, and self-reproducing systems. This study should incorporate the latest thinking from the fields of physics, mathematics, and the life sciences in an attempt to create a model or theory of the extent to which regenerative and possibly self-aware designs may be impressed onto local and wider regions of the Universe – a "general theory of matter patterns."

- Seek the transforms which can be employed at any stage of development to create higher orders of matter patterns.

Human thoughts and conversations typically are conducted using "object"- and "action"-based words learned during childhood. Deeper and more widely applicable symbolic manipulations may be derivable from the mathematical fields of group/set theory, topology, and from the physical and social sciences. A long-term research program should seek to construct a "relationally deep" natural language for human beings and to develop systems for teaching the language both to adults and children. In effect this program would strive to understand intelligence as an entity unto itself and would attempt to explore, identify, and implement more capable "intelligence software" into both life-based and machine-based systems.

4.6 Conclusions, Implications, and Recommendations for Implementation

The Nonterrestrial Utilization of Materials Team developed scenarios for a permanent, growing, highly automated space manufacturing capability based on the utilization of ever-increasing fractions of nonterrestrial materials. The primary focus was the initiation and evolutionary growth of a general-purpose SMF in low Earth orbit. The second major focus was the use of nonterrestrial materials to supply the SMF. A third major focus was on SMF automation technology requirements, particularly teleoperation, robotics, and automated manufacturing and materials processing techniques.

The team adopted a systems approach, beginning with a review of inputs to the SMF system (including sources of raw materials in the Solar System), processes for converting nonterrestrial materials into feedstock, and costs of transporting raw materials and feedstock to LEO. Initiation and growth of the SMF then were considered. A taxonomy of terrestrial manufacturing techniques was developed and analyzed to determine space-compatibility, automatability, and cost-, mass-, and energy-efficiency. From this selection process emerged several "starting kits" of first-generation equipment and techniques. One such "kit," for example, was based on powder metallurgy, extrusion/spray forming, laser machining, robotic forming (by cold welding), and process control via central computer or a distributed network. These tools and techniques would provide an initial space manufacturing presence for the production of second-generation machines and more sophisticated outputs.

As the SMF grows it evolves in several dimensions beyond mere expansion of manufacturing capability. First, the original factory is highly dependent on Earth for its raw material inputs. This dependency lessens as nonterrestrial sources of raw materials – especially the Moon and the asteroids – are developed. Second, the initial facility is run almost entirely by teleoperation (equipment operated by people located at sites remote from the SMF, such as on Earth), but later these teleoperators may largely be replaced by autonomous robots. Finally, the SMF system originally manufactures solar power stations, communications satellites, and a number of other products difficult or impossible to make anywhere but in space (e.g., certain biomedical substances, and foamy metals), but should eventually also begin to produce some outputs for use in other NASA missions in space or back on Earth. Examples include hulls and pressure vessels, integrated circuits and other electronics components for robots and computers, laser communication links, gigantic antennas, lunar teletourism equipment, and solar sails.

The establishment and growth of such a facility would have far-ranging and significant effects on human social and economic institutions. Stine (1975) has called space manufacturing the "third industrial revolution" to highlight the tremendous potential for transforming civilization, much as did the introduction of powered machinery in the 19th century and computers in the 20th century. It is impossible to predict the exact nature of the implications of an SMF for Earth since many would be second- and third-order perturbations. However, several areas of maximum impact were outlined by the team to aid in developmental planning and to minimize potential negative effects.

From an economic standpoint, the SMF scenario is expressly designed to reduce its demands on Earth resources – both material and monetary – as it is developed. Thus, initial costs are the major issue, and proposals have been made for reducing these. Other studies suggest that an SMF can provide a very reasonable return on investment. Certainly, the government will be highly involved in both the approval of the project and its implementation. The establishment of an SMF has definite legal implications, and close cooperation among several nations may be necessary in order to create a mutually satisfactory system. Finally, the public stands to benefit from the establishment of space solar power systems, the creation of new wonder drugs, superpure materials and other products unique to space, and the potential for unusual and fascinating vacations via teletourism.

Besides reducing environmental pollution hazards and increasing world interdependence, the advanced SMF in the long term will undoubtedly have major impacts on private enterprise, labor, industrial capacity, and social conditions in general. While expanded capacity and increased product variety seem likely to be a positive contribution, competition for markets and jobs must certainly be a concern. Careful planning plus a very gradual evolution will help to minimize disruption. A system for equitable involvement of private enterprise in space manufacturing must be devised. The gradual retraining of labor to carry out supervisory and high-adaptability roles for which humans are uniquely suited is already necessary because of advancing automation

on Earth. But it is important to note that this retraining, though initially potentially painful, casts human beings in the fundamentally most appropriate role: telling machines what to do for the benefit of all mankind.

4.6.1 Long-Term Implications for Humankind on Earth

The implications of a growing SMF are unquestionably complex and to some degree unforeseeable. The following discussion is limited to just a few major impact areas, conceptually isolated to convey the enormous potential consequences of the undertaking. A large-scale research effort in the area of societal consequences is required to provide an adequate assessment of the possible scope of the effects.

Environment. The direct environmental impact of the SMF will be significant and positive, mostly because of the relief it will provide from the twin pressures of resource exhaustion and industrial pollution. Many processes now conducted in Earth-based laboratories and factories which pose health hazards could be transferred to the SMF. Biological investigations of recombinant DNA and physics experiments with nuclear or other dangerous materials could be carried out on space platforms using teleoperators.

Indirectly, SMF could serve as construction bases for space solar power systems (SPS). Easily accessible sources of nonrenewable fuels are being consumed at an alarming rate, and the increased use of capital intensive nuclear energy is meeting stiff public opposition in this country and elsewhere. The sane alternative is to use the Sun as a source of "free" energy. Even using terrestrial resources, space solar power stations appear economically attractive (Grey *et al.*, 1977; Johnson and Holbrow, 1977). About 100 5-GW stations would suffice to supply a majority of current Earth-based electric power requirements.

Environmental benefits of placing the energy plant in space are manifold: There would be no danger from natural disasters such as earthquakes, no thermal or particulate pollution, and no risk of explosions or other failures which might conceivably cause harm to human populations (Grey *et al.*, 1977; Mayur, 1979). On the negative side must be weighed the possibility of leakage of microwave transmissions (Barr, 1979; Glaser, 1979; Johnson and Holbrow, 1977) and the security of installations which become the main U.S. energy source. Still, it is clear that SPS technology has the potential to relieve much of the current global energy shortage. Some global cooperation would be inevitable, suggesting major impacts in the sphere of world interdependence.

World interdependence. Somewhat paradoxically, establishment of an SMF may contribute to global interdependence. The fully productive SMF can be compared, in scope, to current multinational corporations, with one important difference: if the economic investments required are so great that governments rather than private sources must be partners in the venture, then nations will share in the wealth generated by the SMF instead of individual investors. Active cooperation would then be required to find some equitable means to ensure that under developed countries have an opportunity to share the fruits of state-of-the-art manufacturing technology (Mayur, 1979). Thence, all nations will come to regard industrialization in a more homogeneous manner, enabling less-developed countries to concentrate greater effort on improving the social and economic conditions within their own borders.

Private enterprise. Space industrialization has the potential for enormous impact on the economic system of the United States. Some of the potentially negative effects can be avoided through proper planning. SMF may be national, perhaps even multinational, enterprises, with the potential of transferring a great deal of the productive capacity of the U.S. into government hands in part because of the anticipated long lead time for economic return. Since SMF output would continually increase, it could eventually dominate the U.S. GNP, in which case Earth-based American manufacturing industries may no longer be competitive. While net national productivity would expand because of the input of additional nonterrestrial materials and energy, the contribution of private enterprise might diminish.

Some means must be found to transfer some of the investment potential back into private hands as the time-frame for economic return on the SMF grows shorter. This opportunity must, however, be equitably distributed, or a few large corporations could gain oligopolistic or monopolistic control over nonterrestrial resources. One suggestion for avoiding the problems associated with the economics of space industrialization is to encourage individuals to become investors (Albus, 1976). While this would avoid the problem of monopolistic control, some means should be devised to ensure that the scheme would not further widen the gap between rich and poor in this country.

Space industrialization will hardly leave the present private enterprise system unmodified. SMF planners must consider to what extent modification of the economic system is acceptable in future generations.

Automation and labor. The scenarios developed by the study team presuppose a high degree of SMF automation. In the long term this means that much of the productive capability of the world will be in the hands of robots, a trend already abundantly apparent in Earth-based manufacturing. Thus, the SMF merely accelerates an existing trend in industrial robotics deployment, with a multiplier effect throughout commercial manufacturing. At issue, then, is to what extent the SMF threatens existing jobs while eliminating the possibility of alternative employment – not simply whether machines can replace humans in some roles.

Many Americans define self-worth through their work. A potentially grim scenario resulting from rapid automated space manufacturing development is that many people might be left suddenly "worthless," shut off from productive activity. The best antidote to such an unwholesome situation is early recognition of the problem. Alternative employment possibilities must be created, perhaps by returning to a strong craftsman or handicraft tradition. Some means must be found to permit participation in automated activities, perhaps through teleoperation or higher-order supervisory control (Chafer, 1979). Finally, more creative leisure time activities must be developed. The educational system must be re-oriented to support the notion that human beings need not derive their worth solely through work. Personal relationships, expanded hobbies, and private research are just a few of the many possible alternatives.

A more subtle result of increased automation is greater human dependency on "the machine." Many people may begin to sense a lack of autonomy in relation to their robot creations. This feeling will be exacerbated by the seeming remoteness of the the SMF, far from the immediate control of people on Earth. This may be a real psychological problem for the general public, so great care should be taken to ensure that the move toward complete automation is sufficiently gradual to allow people the opportunity to adjust to a new man-machine relationship.

Industrial capacity. An expanding SMF must eventually greatly augment the industrial output of the U.S. and the world as a whole. New materials and energy resources will become available at an ever-decreasing cost. Care must be taken to ensure that this capacity is used in a socially responsible manner. Extensive planning may be required to determine what products will have the most beneficial impact for the least cost in terrestrial resources. Several long-term "complex" products have been suggested in section 4.4.4.

It must be recognized that one important function of the SMF is to provide an industrial capability not currently available. The unique space environment makes possible the production of substances not easily duplicated under atmospheric and high-gravity conditions. These materials include serums and vaccines now produced only in very limited quantities, new composite substances, porous metallic structures, and high-purity metals and semiconductors (Grey *et al.*, 1977). Thus directed, the increased industrial capacity derived from the SMF would supplement rather than supplant existing terrestrial industry, and therefore alleviate potential problems of unemployment.

Society. The spirit of the American people has taken an introspective turn. Many are no longer convinced that unexplored horizons still exist. Predictions of global calamity are commonplace, and the philosophy of "small is beautiful" has become popular (Salmon, 1979). Given only limited terrestrial resources, such predictions and prescriptions might indeed be appropriate.

However, establishing an SMF opens new horizons with the recognition that planet Earth is just one potential source of matter and energy. Recognition of the availability of lunar and asteroidal materials and the abundant energy of the Sun can revitalize the traditional American belief in growth as a positive good and can generate a new spirit of adventure and optimism. It is unnecessary to speculate on the directions of growth in its various dimensions because it is clear that American society would continue its historic tradition of exploring new horizons and avoiding stagnation in an ever-changing Universe (Dyson, 1979).

On a more fundamental level, the proposed mission is species-survival oriented. Earth might at any time become suddenly uninhabitable through global war, disease, pollution, or other man-made or natural catastrophes. A recent study has shown that an asteroid collision with Earth could virtually turn off photosynthesis for up to 5 years which, together with massive kilometer-high tsunamis, would virtually extinguish all higher life on this planet (Alvarez *et al.*, 1980). The proposed mission assures the continued survival of the human species by providing an extraterrestrial refuge for mankind. An SMF would stand as constant proof that the fate of all humanity is not inextricably tied to the ultimate fate of Earth.

4.6.2 Near-Term Requirements for SMF Implementation

The foregoing analysis suggests that no single consequence of building an SMF is inevitable. Societal impacts may be channeled by proper planning, i.e., by taking a look at the proposed technological development within the entire global cultural framework. Recognition of the consequences of building an SMF is the first step in determining the requirements for making space industrialization a reality.

Some additional short-term planning requirements are reviewed below. The set of preconditions for the mission also may serve as a set of recommendations for action in NASA planning. A number of technological and societal factors are instrumental in determining whether the scenario proposed in this chapter can ever be actualized. The present discussion makes explicit many requirements tacitly assumed in previous sections, and provides both a general review of the broader significance of the mission and a set of recommendations for future NASA planning.

New technologies. SMF research and development should proceed concurrently with research in materials processing and the design of human space-transportation systems. While lunar and orbital starting kits could be deployed using current techniques, resupply of the SMF,

conveyance of raw materials from Moon to LEO, and delivery of SMF products all demand additional technological development to be economically feasible. Likewise, independence of terrestrial resupply (nonterrestrial materials closure) and economic feasibility go hand in hand.

Technical requirements for limited human habitats in space and on the Moon also must be considered. The proposed mission attempts to minimize the human presence in space through automation. Nevertheless, some supervisory functions must be performed by people, at least in the initial and midterm stages of space industrial development. In addition, as the machine systems evolve they will be able to create increasingly economical and secure nonterrestrial habitats for people.

Economics. Implementation of the proposed scenario, even given its strong emphasis on the utilization of space resources and automation, will require large-scale investment. The mission is designed, however, to build on existing and planned space programs. Some venture capital from private individuals and corporations may be expected as the project draws closer to the point of economic payback.

The space-manufacturing mission is designed to draw less and less on terrestrial economic resources as it develops. The primary initial investment will be for the emplacement of the orbital and lunar starting kit facilities, the concurrent technical development required to create the machines contained within these packages, and people involved in the maintenance of operations.

Actual economic calculations are beyond the scope of the present study. However, previous studies have shown that space facilities not based on the principles of growth and automation can provide an economic return on investment (Johnson and Holbrow, 1977; Science Applications, 1978; Rockwell, 1978), so it is expected that the economics of the present proposal should show an even greater potential for return on investment.

Government. Studies have shown that the Executive branch of the federal government must be a driving force behind the implementation of a large-scale space program (Overholt *et al.*, 1975). The Chief Executive must be convinced that the project will have real value for the nation's citizens, preferably during his own Administration. The present mission emphasizes quick, highly visible results; the SMF is a constantly growing accomplishment with clearly visible benefits for all.

Planners of the project should strive for interagency cooperation and financial support. DOD and DOE are obvious candidates, but other agencies such as NIH might also be interested if properly approached. The SMF could become a truly national facility, particularly if it is recognized as transcending the interests of any single government agency. The grand potential for space utilization may require some revision in NASA's charter, which presently is directed primarily towards exploration (Logsdon, 1979).

Space law. The legal difficulties associated with an SMF and a lunar mining facility have not yet been resolved or exhaustively examined. The latest draft Moon Treaty emphasizes that the use of the Moon should be "for the benefit of all mankind." Interpretations of this phrase vary (Jankowitsch, 1977), but an advisable approach would be to allow other nations to participate in the benefits achieved from the SMF. A second possibility is to ensure that the space and lunar activities proposed for space manufacturing will be explicitly declared legally permissible in the final version of the Treaty.

Global requirements. Since the SMF will eventually have impacts ranging far beyond the borders of the United States, active cooperation with other nations should be sought during project implementation. In this way the problems inherent in a narrow territorial perspective, as well as possible legal objections by other nations, can be avoided. Plans should be drawn for the distribution of some, if not most, SMF products on a global basis. Capital investment in the project by other nations should be encouraged. Less-developed countries should be given an opportunity to participate in any way they can, even if they are unable to invest money in the project (Glaser, 1979). These attempts at open-handedness will do much to alleviate international apprehensions concerning a large-scale project of this sort initiated and conducted solely under U.S. auspices.

Public sector. Americans must be convinced they will derive some immediate and visible advantages from the SMF if it is to become a politically viable concept. People tend to view past space efforts primarily as prestige-oriented events (Overholt *et al.*, 1975). An extensive public education program should be undertaken to demonstrate that automated space manufacturing can produce real economic benefits to the nation as a whole (Barmby, 1979). It should be emphasized that the project can help combat the problem of inflation now facing the country, and that space solar power systems will offset energy shortages that aggravate worldwide economic problems (Science Applications, Inc., 1978). Thus, the project can be shown to have the necessary links to problems of immediate and long-range concern to the ordinary citizen (Overholt *et al.*, 1975). Special applications in the areas of health and tourism should also be emphasized.

It is essential to reassure the nation that fully autonomous robots will be only gradually introduced, that most

existing jobs will not be replaced but rather enhanced, and that automata employed on the SMF will not be completely beyond human control. (Quite the contrary; for example, terrestrial construction crews could teleoperate bulldozers, cranes, or machine tool equipment in space or on the surface of the Moon.) People tend to fear machines which they feel they cannot control, even when this apprehension is unjustified (Taviss, 1972). Great care should be taken to discredit demagogues who may try to create false images and fears in the minds of the public.

Useful production. Planning for an SMF must include detailed consideration of the outputs expected to be produced. The most reasonable approach to production is to view it as an incremental process. Primary initial output of the SMF should be that which allows the facility to expand its own productive capability – an expanded set of machinery. These new devices may then construct hulls or pressurized vessels to provide a larger working environment. At this point some small-scale preparation of biological materials could be carried out (Grey *et al.*, 1977).

Large-scale expansion of the facility requires large-scale teleoperation and robotics. Second-generation products should consist of parts essential to the construction of robots such as integrated circuits, capacitors, resistors, printed circuit boards, and wire. Some of this may be shipped back to Earth as useful production, together with increasing quantities of rare biomedical substances and other materials unique to space.

An expanded SMF makes possible full-scale production of space products and permits utilization of the facility for other purposes. Space platforms, pure glasses and synthetic crystals, satellites, and robots are ideal outputs. In addition, the SMF could undertake the major construction of solar power stations and provide a variety of other commercial applications.

4.7 Final Remarks

The analysis presented in this chapter shows that utilization of the space environment is a viable possibility for future manufacturing strategies. A shift in emphasis from a significant human-supported presence of people in space to a substantially automated and expanding orbital facility which can expand and support both machine systems and people should offer significant economic advantages over previous space industrialization scenarios. The team has elucidated some of the major technological requirements for the actualization of the project. Additional technology feasibility and social impact studies are, of course, required. The main purpose of the present work was to provide a realistic framework for further research and development which may culminate in the construction of an automated Space Manufacturing Facility sometime in the next several decades.

4.8 References

Adams, C. Mel: Production, Assembly, and High Vacuum Fabrication, in J. Grey, ed., Space Manufacturing Facilities (Space Colonies), Proceedings of the Princeton/AIAA/NASA Conference, 7-9 May 1975, AIAA, New York, March 1977, pp. 99-103.

Agin, G. V.: Computer Vision Systems for Industrial Inspection and Assembly, Computer (IEEE), vol. 13, May 1980, pp. 11-20.

AISC (American Institute of Steel Construction) Manual, 1961.

Akin, D. L.: Optimization of Space Manufacturing. In Space Manufacturing III, G. Grey and C. Krop, eds., Proc. 4th Princeton/AIAA Conference, 14-17 May 1979, AIAA, New York, 1979, pp. 257-266.

Albus, James S.: People's Capitalism: The Economics of the Robot Revolution, New World Books, College Park, Maryland, 1976.

Allen, C. W.: Astrophysical Quantities. The Athlone Press, London, 1973. Third ed.

Alvarez, L. W.; Alvarez, W.; Asaro, F.; and Michel, H. V.: Extraterrestrial Cause for the Cretaceous-Tertiary Extinction. Science, vol. 208, 6 June 1980, pp. 1095-1108.

Amstead, B. H.; Ostwald, P. F.; and Begeman, M. L.: Manufacturing Processes. John Wiley and Sons, New York, 1979. Seventh ed.

Andreevskaya, G. D.; and Plisko, T. A.: Some Physical Properties of Continuous Basalt Fibers. Steklo i Keramika, no. 8, August 1963, pp. 15-18; CA 60, 1964, p. 1470.

Ankrum, P. D.: Semiconductor Electronics. Prentice-Hall, Englewood Cliffs, New Jersey, 1971.

Annis, James F.; and Webb, P.: Development of a Space Activity Suit. NASA CR-1892, 1971.

Arnold, J. R.; and Duke, M. B.; eds.: Summer Workshop on Near-Earth Resources. NASA CP-2031, 1978.

Asada, H.; and Hanafusa, H.: An Adaptive Tracing Control of Robots and its Application to Automatic Welding. Joint Automatic Control Conf., 12-15 August 1980, San Francisco, Section FA7-D.

Ayres, R. U.; Ayres, L. W.; and Criswell, D. R.: Economic Considerations in Space Industrialization. In Space Manufacturing III, J. Grey and C. Krop, eds., Proc. of the 4th Princeton/AIAA Conference, 14-17 May 1979, AIAA, New York, 1979. Paper 79-1390, pp. 209-221.

Barkmann, W. E.: Laser-Interferometer Position Feedback for Precise Machine Tools. Joint Automatic Control Conference, 12-15 August 1980, San Francisco, vol. 1, sec. WA7-E.

Barmby, John G.: Improving the Justification for Space Industrialization. In Space Manufacturing III, J. Grey and C. Krop, eds. Proc. 4th Princeton/AIAA Conference, 14-17 May 1979, AIAA, New York, 1979, pp. 163-166.

Barr, Nathaniel F.: An Environmental Assessment of the Satellite Rescuer System Reference Design. In Space Manufacturing III, J. Grey and C. Krop, eds. Proc. 4th Princeton/AIAA Conf., 14-17 May 1979, AIAA, New York, 1979, pp. 441-446.

Bartels, Peter A.; and Bier, Milan: Design, Development, Test, and Evaluation of an Automated Analytical Electrophoresis Apparatus. NASA CR-150443, 1977.

Bejczy, A. K.: Sensors, Controls, and Man-Machine Interface for Advanced Teleoperation. Science, vol. 208, June 20, 1980, pp. 1327-1335.

Belforte, D.: Seeking Answers Overseas. Electro-Optical Systems Design, August 1979.

Bender, David F.; Dunbar, R. Scott; and Ross, David J.: Round-Trip Missions to Low-Delta-V Asteroids and Implications for Material Retrieval. In Space Resources and Space Settlements, J. Billingham, W. Gilbreath, B. Gossett, and B. O'Leary, eds. NASA SP-428, 1979, pp. 161-172.

Bier, M.: Electrophoresis. In An Introduction to Separation Sciences, Barry Karger, Lloyd Snyder, and Csaba Horvath, eds., John Wiley and Sons, New York, 1973, pp. 497-526.

Billingham, J.; Gilbreath, W.; Gossett, B.; and O'Leary, B., eds. Space Resources and Space Settlements, NASA SP-428, 1979.

Bloom, H.; and Gutmann, F.: Electrochemistry. Plenum Press, New York, 1977.

Bock, Edward: Lunar Resources Utilization for Space Construction. General Dynamics Convair Division, GDC-ASP79-001, Contract NAS9-15560, 1979.

Bolz, R. W.: Production Processes: The Productivity Handbook. Conquest Publications, Novelty, Ohio, 1974.

Borrego, J.: Space Grid Structures. MIT Press, 1968.

Bradbury, S., ed.: Source Book on Powder Metallurgy. Am. Soc. for Metals, Metals Park, Ohio, 1979.

Burns, Joseph A., ed.: Planetary Satellites. U. of Arizona Press, Tucson, AZ, 1977.

Campbell, J. S.: Principles of Manufacturing Materials and Processes. McGraw-Hill, New York, 1961.

Carter, G.; and Grant, W. A.: Ion Implantation of Semiconductors. John Wiley and Sons, New York, 1976.

Chafer, Charles M.: The Role of Public Interest Groups in Space Policy. In Space Manufacturing III, J. Grey and C. Krop, eds. Proc. 4th Princeton/AIAA Conf., 14-17 May 1979, AIAA, New York, 1979, pp. 183-192.

Coombs, Clyde F., ed.: Printed Circuits Handbook (Second ed.), McGraw-Hill, San Francisco, California, 1979.

Criswell, David R.: Demandite, Lunar Materials, and Space Industry. In Space Manufacturing Facilities II – Space Colonies, J. Grey, ed. Proceedings of the 3rd Princeton/AIAA Conference, 9-12 May 1977, AIAA, New York, 1977, pp. 131-137.

Criswell, David R.: Lunar Materials for Construction of Space Manufacturing Facilities. In Space Manufacturing Facilities II – Space Colonies, J. Grey, ed. Proceedings of the 3rd Princeton/AIAA Conference, 9-12 May 1977, AIAA, New York, 1977.

Criswell, David R.: Extraterrestrial Materials Processing and Construction. (Final Report, Lunar and Planetary Institute, Houston, Texas), NASA CR-158870, 1978 and 1980.

Cruz, M. I.; Armento, R. F.; and Giles, W. H.: Aerocapture – A Systems Design for Planetary Exploration. Paper No. 379-160, 30th International Astronautical Federation Congress, Munich, Fed. Rep. Germany, 16-22 September 1979, 16 pp.

Dalton, C.; and Hohmann, E.: Conceptual Design of a Lunar Colony, 1972 NASA/ASEE Systems Design Institute. (University of Houston, NASA MSC, Rice University, NASA Grant NGT-44-005-114), NASA CR-129164.

DeGarmo, E. P.: Materials and Processes in Manufacturing, Fifth ed., Macmillan, New York, 1979.

Degewij, J.: Spectroscopy of Faint Asteroids, Satellites, and Comets. J. Astron., vol. 85, 1980, pp. 1403-1412.

Donata, G.; and Camera, A.: A High Level Programming Language for a New Multi-Arm Assembly Robot. First International Conference on Assembly Automation. Brighton, England, D.E.A. SPA, CSO, Torino, 21-27 March 1980.

Drexler, K. E.: Lightsails – An Overview. In Discussion Meeting on Gossamer Spacecraft (Ultralightweight Spacecraft): Final Report, Roy G. Brereton, ed., JPL Publication 80-26, Jet Propulsion Laboratory, Pasadena, California, 15 May 1980, pp. 8-12.

Dubovkaya, T. S.; and Kosmina, N. E.: Chemical Stability of Staple Basaltic Fibers. Strukt. Sostav. Svoistva Formovanie Steklyanykj Volokon, 1968, pp. 1, 140; CA 73, 112426 (1970).

Duda, R. O.; Hart, P. E.; Konolige, K.; and Reboh, R.: A Computer-Based Consultant for Mineral Exploration. Prepared for the National Science Foundation by SRI International, Menlo Park, California, SRI Project 6415, 1979. 185 pp.

Dummer, G. W. A.: Materials for Conductive and Resistive Functions. Hayden Books, New York, 1970.

Dunbar, R. S.: The Search for Asteroids in the L4 and L5 Libration Points in the Earth-Sun System. In Space Manufacturing III, J. Grey and C. Krop, eds. Proceedings of the 4th Princeton/AIAA Conference, 14-17 May 1979, AIAA, New York, 1979, pp. 560-568.

Dunning, Jeremy D.; and Snyder, Robert S.: Electrophoretic Separation of Lunar Soils in a Space Manufacturing Facility. Paper presented at the 5th Princeton/AIAA/SSI Conference on Space Manufacturing, 18-21 May 1981, Princeton, New Jersey.

Dyson, Freeman: Disturbing the Universe. Harper and Row Publishers, New York, 1979.

European Space Agency: Polar Orbiting Lunar Observatory (POLO) Assessment Study, ESA-SCI (71), National Technical Information Service, 1979. 46 pp.

Feurstenav, P.; and Raghaven, S.: In Rektor der Bergakedie Freiberg, A 593, VEB Deutsch er Verlag Fur Grundstoffindustrie, 1978.

Fields, S. A.; and Weathers, H. M.: Problems and Techniques of Lunar Surface Mining. NASA TM X-53560, 1967.

Freitas, Robert A., Jr.: A Self-Reproducing Interstellar Probe. J. British Interplanetary Soc., vol. 33, July 1980, pp. 251-264.

Freitas, Robert A., Jr.: LMF Chemistry Sector: A Preliminary Design. Summer Study Document, 27 July 1980a, 38 pp.

Freitas, Robert A., Jr.: Baseline Reference Design for a Growing, Self-Replicable Lunar Manufacturing Facility. Summer Study Document, 8 July 1980b.

Freitas, Robert A., Jr.: Automated Assembly System for a Growing, Replicating Lunar Manufacturing Facility. Summer Study Document, 8 August 1980c.

Freitas, Robert A., Jr.; and Valdes, Francisco: A Search for Natural or Artificial Objects Located at the Earth-Moon Libration Points. Icarus, vol. 42, June 1980d, pp. 442-447.

Freitas, Robert A., Jr.; and Zachary, William B.: A Self-Replicating, Growing Lunar Factory. Paper presented at the 5th Princeton/AIAA/SSI Conference on Space Manufacturing, 18-21 May 1981, Princeton, New Jersey.

Gaffey, M. J.; Helin, E. F.; and O'Leary, B.: An Assessment of Near-Earth Asteroid Resources. In Space Resources and Space Settlements, J. Billingham, W. Gilbreath, B. Gossett, and B. O'Leary, eds., NASA SP-428, 1979, pp. 191-204.

Gaffey, M. J.; and McCord, T. B.: Mineralogical Characterizations of Asteroid Surface Materials from Reflectance Spectroscopy: A Review. AIAA Paper 77-527. In Space Manufacturing Facilities II, J. Grey, ed., Proceedings of the 3rd Princeton/AIAA Conference, 9-12 May 1977, AIAA, New York, 1977, pp. 143-154.

Gehrels, T., ed.: Asteroids. The Univ. of Arizona Press, Tucson, 1979.

Giuse, D.; and Guida, G.: User Defined Control Structures in Programming Languages for Robots. 10th International Conference on Industrial Robots, 5-7 March 1980, Milan, Italy, pp. 73-88.

Glaser, A. B.; and Subak-Sharpe, G. E.: Integrated Circuit Engineering. Addison-Wesley, Reading, Massachusetts, 1977.

Glaser, Peter E.: The Benefits of Solar Power Satellites. In Space Manufacturing III, J. Grey and C. Krop, eds., Proc. 4th Princeton/AIAA Conf., 14-17 May 1979, AIAA, New York, 1979, pp. 235-243.

Goeller, H. E.; and Weinberg, Alvin M.: The Age of Substitutability. Science, vol. 191, 20 February 1976, pp. 683-689.

Goldberg, Aaron: The Economics of Bootstrapping Space Industries – Development of an Analytic Computer Model. Paper presented at the 5th Princeton/AIAA/SSI Conference on Space Manufacturing, 18-21 May 1981, Princeton, New Jersey.

Greeley, R.; and Carr, M. H.; eds.: A Geological Basis for the Exploration of the Planets. NASA SP-417, 1975.

Green, J.: The Polar Lunar Base – A Viable Alternative to L-5 in the Future of the U.S. Space Program. Proceedings of the 25th Anniversary Conference of the American Astronautical Society, 30 October-2 November 1978. Paper No. AAS78-191, pp. 385-425.

Grey, J., ed.: Space Manufacturing Facilities (Space Colonies). Proc. Princeton/AIAA/NASA Conference, 7-9 May 1975, AIAA, New York, March 1977.

Grey, J., ed.: Space Manufacturing Facilities II. Proc. 3rd Princeton/AIAA Conference, 9-12 May 1977, AIAA, New York, 1977.

Grey, J.; Downey, P.; and Davis, B.; eds.: Space: A Resource for Earth. AIAA, New York, 1977.

Grey, J.; and Krop, C.; eds.: Space Manufacturing III. Proc. 4th Princeton/AIAA Conference, 14-17 May 1979, AIAA, New York, 1979.

Grodzka, P. G.: Process Chemistry of L5 in Space Manufacturing Facilities. In Space Manufacturing Facilities (Space Colonies), J. Grey, ed. Proceedings of the Princeton/AIAA/NASA Conference, 7-9 May 1975, AIAA, New York, March 1977.

Grossman, M.: Technician's Guide to Solid-State Electronics. Parker Publishing Company, West Nyack, New York, 1976.

Heer, Ewald, ed.: Proceedings of the Pajaro Dunes Goal-Setting Workshop, unpublished draft notes, June 1980.

Henderson, R. A.; and Vickery, A.: Floating Zone Electrophoresis Facility for Spacelab, Phase A Study. Final Report ESA-CR(P)-807, (N76-27313), March 1976.

Holland, S.; Rossol, L.; and Ward, Mitchel R.: CONSIGHT 1. In Computer Vision and Sensor Based Robots, Richard O. Duda, L. Rossol, eds. Plenum Press, New York, 1979.

Inculet, I. I.; and Criswell, D. R.: Electrostatic Beneficiation of Ores on the Moon Surface. Inst. Physics Conference, Ser. No. XX, Chapter Z, Un. Oxford Press, England, 1979. LPI Contribution #352.

Jankowitsch, Peter: International and Legal Considerations. In Space Manufacturing Facilities II, Space Colonies, Jerry Grey, ed. Proc. of the 3rd Princeton/AIAA Conference, 9-12 May 1977, AIAA, New York, 1977, pp. 337-342.

Johnson, Richard D.; and Holbrow, Charles, eds.: Space Settlements: A Design Study. NASA SP-413, 1977.

Jones, W. D.: Fundamental Principles of Powder Metallurgy. Edward Arnold Ltd., London, 1960.

Jungerman, E., ed: Cationic Surfactants. Marcel Dekker, Inc., New York, 1970.

Kahn, Herman; Brown, William; and Martel, Lem: The Next 200 Years. William Morrow & Co., New York, 1976.

Kato, H.; Minezaki, M.; and Ozaki, Y.: Automatic Forging Press Line – 5000 tf. Metallurgia, vol. 45, no. 10, Oct. 1978.

Khambata, Adi J.: Introduction to Integrated Semiconductor Circuits. John Wiley and Sons, New York, 1963.

Kolm, Henry: An Electromagnetic 'Slingshot' for Space Propulsion. Technology Review, vol. 79, June 1977, pp. 61-66.

Kopecky, L.: Crystallization Temperatures of Rocks from Tranquility Base Compared with Experimental Crystallization of Dry Silicate Melts. In Geological Problems in Lunar and Planetary Research, J. Green, ed. AAS Science and Technology Series, vol. 25, 1971, pp. 685-698.

Kopecky, L.; and Voldan, J.: The Cast Basalt Industry. In Geological Problems in Lunar Research, Annals of the New York Academy of Science, Harold E. Whipple, ed., vol. 123, 1965, pp. 1086-1105.

Korolev, V. A.; Sergeev, S. M.; and Jurevich, E. I.: Application of Pneumatic Industrial Robots for Assembly. First International Conf. on Assembly Automation, 25-27 March 1980, Brighton, England.

Kuck, D. L.: Near-Earth Extraterrestrial Resources. In Space Manufacturing III, J. Grey and C. Krop, eds., Proceedings of the 4th Princeton/AIAA Conference, 14-17 May 1979, AIAA, New York, 1979, pp. 97-108.

Laszlo, Ervin *et al.*: Goals for Mankind. Dutton, New York, 1977.

Lee, Stuart M.: Lunar Building Materials – Some Considerations on the Use of Inorganic Polymers. In Space Resources and Space Settlements, J. Billingham, W. Gilbreath, B. Gossett, and B. O'Leary, eds. NASA SP-428, 1979, pp. 233-241.

Leonard, Raymond S.: Automated Construction of Photovoltaic Power Plants. Bechtel National, Inc., San Francisco, California, 1980.

Lindberg, R. A.: Processes and Materials of Manufacture (Second Ed.). Allyn and Bacon, Boston, 1977.

Logsdon, J. M.: Space Manufacturing and Public Policy Formulation. In Space Manufacturing III, J. Grey and C. Krop, eds. Proc. 4th Princeton/AIAA Conference, 14-17 May 1979, AIAA, New York, 1979, pp. 151-155.

Lowman, Paul D., Jr.: The Apollo Program: Was It Worth It? World Resources: The Forensic Quarterly, vol. 49, 1975, pp. 291-302.

Lunar and Planetary Institute: Proceedings of the Ninth Lunar and Planetary Science Conference, Houston, 1978, Pergamon Press.

Mackenzie, J. D.; and Claridge, R. C.: Glass and Ceramics from Lunar Materials. In Space Manufacturing III, J. Grey and C. Krop, eds., Proceedings of the 4th Princeton/AIAA Conference, 14-17 May 1979, AIAA, New York, 1979, Paper No. 79-1381, pp. 135-140.

Manasse, F. K.: Semiconductor Electronics Design. Prentice-Hall, Englewood Cliffs, New Jersey, 1977.

Martin Marietta Corporation: Space Shuttle External Tank System Definition Handbook: Vol. 1 – Configuration and Operational Data. Martin Marietta, Michoud Assembly Facility, New Orleans, Louisiana, 1974.

Mayur, Bashmi: Space Industrialization: An International Perspective. In Space Manufacturing III, J. Grey and Christine Krop, eds., Proc. 4th Princeton/AIAA Conf., 14-17 May 1979, AIAA, New York, 1979, pp. 63-70.

McCreight, L.: Industrial Development in Zero-G. In Space Manufacturing Facilities (Space Colonies), J. Grey, ed. Proc. of the Princeton/AIAA/NASA Conference, 7-9 May 1975, AIAA, New York, 1977, pp. 87-97.

Meadows, Donella H.; Meadows, Dennis L.; Randers, Jorgen; and Behrens, William W., III: The Limits to Growth. Universe Books, New York, 1972.

Miller, Rene H.; and Smith, David B. S.: Extraterrestrial Processing and Manufacturing of Large Space Systems. NASA CR-161293, 1979.

Minear, J. W.; Hubbard, N.; Johnson, T. V.; Clarke, V. C.; and Lunar Polar Orbiter Sciences Working Team: Mission Summary for Lunar Polar Orbiter, Doc. #660-41, Jet Propulsion Laboratory, Pasadena, California, September 1976, 38 pp.

Minsky, M.: Toward a Remotely Manned Energy and Production Economy. MIT Artificial Intelligence Laboratory, A.I. Memo No. 544, Boston, MA, September 1979, 19 pp.

Minsky, M.: Telepresence. Omni, vol. 2, June 1980, pp. 44-52.

Mock, J. A.: Metals That Form Like Plastic. Materials Engineering, vol. 92, August 1980, pp. 36-39.

Mongeau, P.; Fitch, O.; Kolm, H.; Williams, F.; Greneau, P.; and McKinney, K.: The Case for Electromagnetic Earth Launching. Paper presented at the 5th Princeton/AIAA/SSI Conference on Space Manufacturing, 18-21 May 1981, Princeton, New Jersey.

Moore, H. D.; and Kibbey, D. R.: Manufacturing: Materials and Processes. Irwin, Homewood, Illinois, 1965.

Moore, R. G.: Bubble Structures for Gossamer Spacecraft. In Discussion Meeting on Gossamer Spacecraft (Ultralightweight Spacecraft): Final Report, Roy G. Brereton, ed. NASA CR-163275, 1980.

Morrison, David: Asteroid Sizes and Albedos. Icarus, vol. 31, no. 2, 1977, pp. 185-220.

Morrison, D.; and Wells, W. C.; eds.: Asteroids: An Exploration Assessment, NASA CP-2053, 1978.

Namba, S., ed.: Ion Implantation in Semiconductors. Plenum Press, New York, 1975.

New Development in High Power Lasers, Product Engineering; December 1970.

Office of Aeronautics and Space Technology (OAST), NASA Space Systems Technology Model, 1-3 May 1980. NASA TM-81041 through NASA TM-81043. Washington, D.C., National Aeronautics and Space Administration, 1980.

Oldham, William G.: The Fabrication of Microelectronic Circuits. Scientific American, vol. 237, September 1977, pp. 110-128.

O'Leary, B.; Gaffey, M. J.; Ross, D. J.; and Salkeld, R.: Retrieval of Asteroidal Materials. In Space Resources and Space Settlements, J. Billingham, W. Gilbreath, B. Gossett, and B. O'Leary, eds., NASA SP-428, 1979, pp. 173-189.

O'Neill, Gerard K.: The Colonization of Space. Physics Today, vol. 27, September 1974, pp. 32-40.

O'Neill, G. K.: Maximum Strength, Minimum Mass Structures. In Space-Based Manufacturing from Extraterrestrial Materials, Gerard K. O'Neill, ed. AIAA Progress in Astronautics and Aeronautics Series, vol. 57, AIAA, New York, 1977, pp. 161-171.

Ostwald, Phillip F.: Cost Estimating for Engineering and Management, Prentice-Hall, Englewood Cliffs, New Jersey, 1974.

Overholt, W.; Wiener, A. J.; and Yokelson, D.: Implications of Public Opinion for Space Program Planning, 1980-2000. (Hudson Institute Inc., Croton-on-Hudson, N.Y., N76-17984), NASA CR-144730, 1975.

Paul, R.; *et al.*: Advanced Industrial Robot Control Systems, School of Electrical Engineering, Purdue U., Lafayette, Ind., NSF Contract no. APR-77-14533, 1980.

Phinney, W. C.; Criswell, D. R.; Drexler, E.; and Garmirian, J.: Lunar Resources and their Utilization. In Space-Based Manufacturing from Extraterrestrial Materials, Gerard K. O'Neill, ed. AIAA Progress in Astronautics and Aeronautics Series, vol. 57, AIAA, New York, 1977, pp. 97-123.

Pomeroy, John H.; and Hubbard, Norman V.: The Soviet-American Conference on Cosmochemistry of the Moon and Planets, NASA SP-370, (Part 2). 1977.

Rao, D. Bhogeswara; Choudary, U. V.; Erstfeld, T. E.; Williams, R. J.; and Chang, Y. A.: Extraction Processes for the Production of Aluminum, Titanium, Iron, Magnesium, and Oxygen from Nonterrestrial Sources. In Space Resources and Space Settlements, J. Billingham, W. Gilbreath, B. Gossett, and B. O'Leary, eds., NASA SP-428, 1979, pp. 257-274.

Robinson, C. A., Jr.; and Klass, P. J.: Technical Survey: Particle Beams, Laser Weapons. Aviation Week and Space Technology, vol. 113, 28 July 1980, pp. 32-66 (Part 1) and vol. 113, 4 August 1980, pp. 44-68 (Part 2).

Rockwell International: Space Industrialization. Vol. 1: Executive Summary. NASA CR-150720, 1978.

Rosen, Charles A.; Nitzan, D.; Agin, G.; Andeen, G.; Berger, J.; Blean, R.; Gleason, G.; Hill, J.; Park, W.; and Paul, R.: Machine Intelligence Research Applied to Industrial Automation. Stanford Research Institute, Grant APR 75-13074, November 1976.

Rothschild, K. J.; Jeziorski, P.; Cunningham, A.; and Silverman, G.: Spotlight on Resistors. Electronic News, Supplement, 21 July 1980.

Sacerdoti, Earl D.: Problem Solving Tactics, SRI Project 7910, Technical Note 189, SRI International, Menlo Park, California, July 1979.

Salmon, J. D.: Space Manufacturing and Technocratic Centralism. In Space Manufacturing III, J. Grey and C. Krop, eds. Proc. 4th Princeton/AIAA Conference, 14-17 May 1979, AIAA, New York, 1979, pp. 167-172.

Saville, D. A.; and Ostrach, S.: Fluid Mechanics of Continuous Flow Electrophoresis. NASA CR-150689, 1978.

Scarlett, J. A.: Printed Circuit Boards for Microelectronics. Van Nostrand Reinhold Company, London, England, New York, 1970.

Schey, J. A.: Introduction to Manufacturing Processes. McGraw-Hill, New York, 1977.

Schoen, E.; Dorl, G.; and Lemke, H. J.: Electrophoresis Experiment MA-014 in the Apollo-Soyuz Test Project. Part 3: Future Applications. Final Report, ESA-TT-473 (N78-22131), September 1977. In German.

Schraft, R. D. *et al.*: Possibilities and Limits for the Application of Industrial Robots in New Fields. 10th Int. Symp. on Industrial Robots, 5-7 March 1980, Milan, Italy.

Schwartz, M. M.: Metals Joining Manual. McGraw-Hill Book Co., 1979.

Science Applications, Inc.: Space Industrialization, Vols. 1-4 (NASA Contract NAS-8-32197, SAI-79-(602-605)-HU, Science Applications, Inc., Huntsville, Alabama, 15 April 1978). NASA CR-150752 through NASA CR-150755.

Sheffield, Charles: How to Build a Beanstalk. Destinies, vol. 1, Aug./Sept. 1979, pp. 41-68.

Stine, G. H.: The Third Industrial Revolution. G. P. Putnam and Sons, New York, 1975.

Subramanian, R. V.; and Austin, H. F.: Basalt Fibers. In Handbook of Fillers and Reinforcements for Plastics, Harry S. Katz and John V. Milewski, eds. Van Nostrand Reinhold Co., New York, 1978, pp. 504-510. (Chapter 26A).

Subramanian, R. V.; Austin, H. F.; Raff, R. A. V.; Sheldon, G.; Dailey, R. T.; and Wullenwaber, D.: Use of Basalt Rock for the Production of Mineral Fiber. Pacific Northwest Commission Annual Report, Contract No. NR-3001, College of Engineering, Washington State Univ., Pullman, Washington, June 1975.

Subramanian, R. V.; Austin, H. F.; and Wang, T. J. Y.: Basalt Fibers. Pacific Northwest Regional Commission Annual Report, Contract No. NR-3017, College of Engineering, Washington State Univ., Pullman, Washington, September 1976.

Subramanian, R. V.; and Kuang-Huah, Shu: Interfacial Bonding in Basalt Fiber-Polymer Composites. 34th Annual Technical Conference, Reinforced Plastics/Composites Institute, Section 17C, 1979, pp. 1-10.

Subramanian, R. V.; Wang, T. J. Y.; and Austin, H. F.: Reinforcement of Polymers by Basalt Fibers. Sampe Quarterly, vol. 8, no. 4, July 1977, pp. 1-10.

Subramanian, R. V.; and Austin, H. F.: Method for Forming Basalt Fibers with Improved Tensile Strength. U.S. Patent 4,149,866, 1979.

Tebo, A. R.: Laser Annealing – and Beyond. Electro-Optical Systems Design, December 1979.

Taviss, Irene: A Survey of Popular Attitudes Toward Technology. Technology and Culture, vol. 13, October 1972, pp. 606-621.

Vanderbrug, G. J.; and Nagel, R. N.: Image Pattern Recognition in Industrial Inspection, NBSIR-79-1764, PB 80-108871 (N80-21771), U.S. Bureau of Standards, avail. September 1980.

Vanderhoff, John W.; and Micale, F. J.: Electrophoresis Experiment for Space. NASA CR-149925, 1976.

Vought Corporation: A Review of Vought's Previous Work on the Teleoperator Maneuvering System. Orientation Meeting, A Study Contract for Marshall Space Flight Center, 29-30 May 1980.

Waldron, R. D.; Erstfeld, T. E.; and Criswell, D. R.: The Role of Chemical Engineering in Space Manufacturing. Chemical Engineering, vol. 86, no. 4, 12 February 1979, pp. 80-94.

Wang, T. G.; and Kendall, J. M.: Fluid Dynamic Studies Relating to the Production of Large Fusion Targets. Inertial Confinement Fusion Conference, Conference on Laser Electronics and Optics (CLEO), San Diego, California, February 1980.

Way, F.: The Pulsed Nd:YAG Holographic Laser: Present Status and Applications. Proc. Technical Program, Electro-Optical Systems Design Conference and International Laser Exposition, Anaheim, California, 11-13 November 1975.

Weiss, R. A.: Lanham, J. W.; Richman, D. W.; and Walker, C. D.: Investigation of the Free Flow Electrophoretic Process. NASA CR-161241, 1979.

Westwood, A. R. C.: Third Tewksbury Lecture on Fracture Control and Application of Environment Sensitive Fracture Processes. J. Materials Sci., vol. 9, Nov. 1974, pp. 1871-1895.

Wetherill, George W.: Apollo Objects. Scientific American, vol. 240, March 1979, pp. 54-65.

Williams, Richard J.; and Jadwick, James J., eds.: Handbook of Lunar Materials, NASA RP-1057, 1980.

Wilson, R. G.; and Brewer, G. R.: Ion Beams. John Wiley and Sons, New York, 1973.

Yachida, M.; and Tsuji, S.: Industrial Computer Vision in Japan. Computer (IEEE), vol. 13, no. 5, May 1980, pp. 50-63.

Yankee, H. W.: Manufacturing Processes. Prentice-Hall, Englewood Cliffs, New Jersey, 1979. 765 pp.

Yushchenko, A. S.: A Combined System of Semiautomatic Control of a Manipulator. Engineering Cybernetics, vol. 17, no. 1, January-February 1979, pp. 157-160.

Zellner, B.; and Bowell, E.: Asteroid Compositional Types and Their Distributions. The Interrelated Origin of Comets, Asteroids, and Meteorites. A. H. Delsemme, ed., University of Toledo Publ., 1977, pp. 185-197.

APPENDIX 4A

LUNAR SUPPLY OF A LOW EARTH ORBIT STATION: DERIVATION OF FORMULAS

The mass brought to LEO from the Moon is $M_{PL} + M_{LAN}$ where M_{PL} is the mass of the payload of lunar soil and M_{LAN} is the mass of the LANDER system that carries it. The LANDER must have sufficient tankage to carry payload plus the propellant to lift off from the Moon (M_{PR_4}), or to carry the hydrogen required on the Moon plus the propellant to carry the system to the Moon from the OTV ($M_{PR_{2+3}} = M_{PR_2} + M_{PR_3}$, the propellant requirements for burns two and three), whichever is greater. The fact that $\Delta V_4 \sim \Delta V_2 + \Delta V_3$ and that $M_{PL} >> M_H$, where M_H is the mass of hydrogen carried to the Moon, makes it clear that the former tankage requirement is the more stringent. It has therefore been assumed that:

$$M_{LAN} = M_{LS} + aM_{PL} + BM_{PR_4}$$

where M_{LS} is the mass of the LANDER structure and a and B are the tankage fractions for the payload and propellant, respectively. For all burns and for both the OTV and the LANDER B is assumed to be the same.

On the lunar surface prior to takeoff, the mass of the LANDER system is:

$$M_{LAN} + M_{PL} + M_{PR_4} = (M_{PL} + M_{LAN})e^{\Delta V_4/c}$$

$$= (M_{PL} + M_{LS} + aM_{PL} + BM_{PR_4})e^{\Delta V_4/c}$$

Therefore,

$$M_{PR_4} = \frac{K_4\,[(1 + a)M_{PL} + M_{LS}]}{1 - BK_4}$$

where c is exhaust velocity. Therefore,

$$K_n = e^{\Delta V_n/c} - 1$$

Since the OTV and LANDER are fueled at LEO, the only hydrogen carried to the Moon is that required in M_{PR_4}. If M_H is defined as the mass of hydrogen carried to the lunar surface, then

$$M_H = B_H M_{PR_4} = B_H K_4 \frac{(1 + a)M_{PL} + M_{LS}}{1 - BK_4}$$

where B_H is the hydrogen fraction in the propellant.

The mass landed on the Moon must be:

$$M_{LAN} + M_H = M_{LS} + aM_{PL} + BM_{PR_4} + B_H M_{PR_4}$$

$$= \frac{(B + B_H)K_4\,[(1 + a)M_{PL} + M_{LS}]}{1 - BK_4}$$

$$+ M_{LS} + aM_{PL}$$

The payload for the OTV is therefore

$$(M_{LAN} + M_H)e^{\Delta V_{2+3}/c}$$

where:

$$\Delta V_{2+3} = \Delta V_2 + \Delta V_3$$

$$M_{PR_{2+3}} = (M_{LAN} + M_H)(e^{\Delta V_{2+3}/c} - 1)$$

$$= K_{2+3}(M_{LAN} + M_H)$$

and

$$M_{OTV} = M_{OS} + BM_{PR_1}$$

for M_{OS} defined as OTV structure mass.

The mass leaving LEO is therefore:

$$M_{OTV} + M_{PR_1} + (M_{LAN} + M_H)e^{\Delta V_{2+3}/c}$$

where:

$$M_{PR_1} = [M_{OTV} + (M_{LAN} + M_H)e^{\Delta V_{2+3}/c}](e^{\Delta V_1/c} - 1)$$

$$= K_1\,[M_{OS} + BM_{PR_1} + (M_{LAN} + M_H)e^{\Delta V_{2+3}/c}]$$

$$= \frac{K_1\,[M_{OS} + (M_{LAN} + M_H)e^{\Delta V_{2+3}/c}]}{1 - BK_1} \qquad (1)$$

The amount of material lifted off the Earth is:

$$M_{H_{\text{lift}}} = M_H + B_H(M_{PR_1} + M_{PR_{2+3}})$$

$$= B_H(M_{PR_1} + M_{PR_{2+3}} + M_{PR_4})$$

$$= B_H\left\{\frac{K_1}{1 - BK_1}\,[M_{OS} + (M_{LAN} + M_H)(K_{2+3} + 1)] + K_{2+3}(M_{LAN} + M_H) + M_{PR_4}\right\}$$

$$= B_H\left\{\frac{K_1}{1 - BK_1}\,M_{OS} + \left[\frac{K_1(K_{2+3} + 1)}{1 - BK_1} + K_{2+3}\right] \times (M_{LAN} + M_H) + M_{PR_4}\right\}$$

$$= B_H\left\{\frac{K_1}{1 - BK_1}M_{OS} + \left[\frac{K_1(K_{2+3} + 1)}{1 - BK_1} + K_{2+3}\right] \times \left[\frac{(B + B_H)K_4\,[(1 + a)M_{PL} + M_{LS}]}{1 - BK_4} + M_{LS} + aM_{PL}\right] + \frac{K_4}{1 - BK_4}\,[(1 + a)M_{PL} + M_{LS}]\right\}$$

If we define A, b, and C as follows:

$$A \equiv B_H\left\{\left[\frac{K_1(K_{2+3} + 1)}{1 - BK_1} + K_{2+3}\right]\left[\frac{(B + B_H)K_4(1 + a)}{1 - BK_4} + a\right] + \frac{K_4(1 + a)}{1 - BK_4}\right\}$$

$$b \equiv \frac{B_H K_1}{1 - BK_1}$$

$$C \equiv B_H\left\{\left[\frac{K_1(K_{2+3} + 1)}{1 - BK_1} + K_{2+3}\right]\left[\frac{(B + B_H)K_4}{1 - BK_4} + 1\right] + \frac{K_4}{1 - BK_4}\right\}$$

$$M_{H_{\text{lift}}} = AM_{PL} + bM_{OS} + CM_{LS}$$

From M_{PL} is taken material sufficient to replace the nonhydrogen part of the fuel supply. The amount of payload left over is P, hence:

$$M_{PL} = P + (1 - B_H)(M_{PR_1} + M_{PR_{2+3}})$$

$$= P + (1 - B_H)\left[\frac{M_{H_{\text{lift}}}}{B_H} - M_{PR_4}\right]$$

$$= P + \frac{1 - B_H}{B_H}\left\{M_{H_{\text{lift}}} - \frac{B_H K_4}{1 - BK_4}\,[(1 + a)M_{PL} + M_{LS}]\right\}$$

$$M_{PL} = \frac{\left(P + [(1 - B_H)/B_H]\left\{M_{H_{\text{lift}}} - [B_H K_4/(1 - BK_4)]M_{LS}\right\}\right)}{1 + [(1 - B_H)/(1 - BK_4)]K_4(1 + a)}$$

and

$$M_{H_{\text{lift}}} = A\,\frac{\left(P + [(1 - B_H)/B_H]\,[M_{H_{\text{lift}}} - B_H K_4 M_{LS}/(1 - BK_4)\right)}{1 + [(1 - B_H)/(1 - BK_4)]K_4(1 + a)} + bM_{OS} + CM_{LS}$$

$$\frac{dM_{H_{\text{lift}}}}{dP} = \frac{A\;\;1 + [(1 - B_H)/B_H](dM_{H_{\text{lift}}}/dP)}{1 + [(1 - B_H)/(1 - BK_4)K_4(1 + a)}$$

$$= \frac{A/(1 + \;\;[(1 - B_H)/(1 - BK_4)]K_4(1 + a)}{\left(1 - [(1 - B_H)/B_H]\;\;A/\left\{1 + [(1 - B_H)/(1 - BK_4)]K_4(1 + a)\right\}\right)}$$

$$= \frac{A}{\left(1 + [(1 - B_H)/(1 - BK_4)]K_4(1 + a) - [(1 - B_H)/B_H]A\right)}$$

But if

$$X = \frac{A}{B_H} - \frac{K_4(1+a)}{1-BK_4} = \left[\frac{K_1(K_{2+3}+1)}{1-BK_1} + K_{2+3}\right]\left[\frac{K_4(B+B_H)}{1-BK_4}(1+a)+a\right] \quad (2)$$

then

$$\frac{dM_{H_{\text{lift}}}}{dP} = \frac{B_H\{X + [K_4(1+a)/(1-BK_4)]\}}{1-(1-B_H)X} \quad (3)$$

This is the mass of hydrogen that must be uplifted from Earth to gain 1 kg of extra lunar payload to LEO. If no OTV is to be used, return to equation (1); M_{OS} is now zero. If it is assumed that the payload tankage is more than enough to hold M_{PR_1}, then the term BM_{PR_1} also disappears. Following through with these changes, X becomes:

$$X' = [K_1(K_{2+3}+1) + K_{2+3}]\{[K_4(B + B_H)/(1-BK_4)](1+a)+a\} \quad (4)$$

and

$$\frac{dM_{H_{\text{lift}}}}{dP} = \frac{B_H\{X' + [K_4(1+a)]/(1-BK_4)\}}{1-(1-B_H)X'} \quad (5)$$

The text shows that this reduces the marginal propellant cost by a small amount. If extra tankage is required to hold M_{PR_1} the advantage is probably wiped out.

4A.1 Numerical Equations

For simplicity, assume that the OTV starts in a circular 200 km orbit in the Earth-Moon plane and just reaches the Moon. Various relevant parameters used in the calculations are listed below.

$d_{\text{Moon}} = 384410$ km
$r_{\text{Earth}} = 6378$ km
$r_{\text{Moon}} = 1738$ km
$\mu_{\text{Earth}} = 398600.3$ km^3/sec^2
$\mu_{\text{Moon}} = 4903$ km^3/sec^2
LEO at 200 km altitude in place of lunar orbit
Perilune of transfer orbit at 50 km altitude

The circular orbital velocity at 200 km altitude is:

$$V_{\text{cir}} = 7.7843 \text{ km/sec}$$

The transfer orbit has

$$a_o = [(r_e + 200) + d_{\text{Moon}}]/2 = 195{,}494 \text{ km}$$

Therefore the spacecraft velocity upon leaving LEO is:

$$V_{\text{launch}} = \sqrt{\frac{2\mu_e}{r_e + 200} - \frac{\mu_e}{a_o}} = 11.0087 \text{ km/sec}$$

so $\Delta V_1 = V_{\text{launch}} - V_{\text{cir}} = 3.2244$ km/sec. This orbit has its apogee at the Moon's orbit and apogee velocity of $V_{\text{apogee}} = 0.18679$ km/sec. If the Moon has a circular orbit, its orbital velocity is $V_{\text{Moon}} = 1.02453$ km/sec, hence, spacecraft velocity relative to the Moon is $V_{\text{Moon}} - V_{\text{apogee}} = V_{\text{infinity}} = 0.8377$ km/sec.

While passing 50 km above the lunar surface the OTV releases LANDER, which at once performs a burn to place it into a 1738 X 1788 km orbit around the Moon. The OTV's velocity relative to the Moon prior to separation is:

$$V = \sqrt{V^2_{\text{infinity}} + \frac{2\mu_{\text{Moon}}}{r_m + 50}} = 2.4872 \text{ km/sec}$$

The semimajor axis of the orbit about the Moon is 1763 km and so the velocity of the LANDER at apolune is

$$V_{\text{apolune}} = \sqrt{\frac{2\mu_{\text{Moon}}}{r_{\text{Moon}} + 50} - \frac{\mu_{\text{Moon}}}{a_o}}$$

The magnitude of the required orbital injection burn is therefore $\Delta V_2 = V - V_{\text{apolune}} = 0.84303$ km/sec. The LANDER then performs a half-orbit of the Moon and lands:

$$\Delta V_3 = V_{\text{perilune}} = \sqrt{\frac{2\mu_{\text{Moon}}}{r_{\text{Moon}}} - \frac{\mu_{\text{Moon}}}{a_o}} = 1.6915 \text{ km/sec}$$

The lunar processor refuels the LANDER and loads its payload tanks with lunar soil. Takeoff from the Moon on a trajectory that returns to LEO by way of aerobraking requires

$$\Delta V_4 = \sqrt{V^2_{\text{infinity}} + \frac{2\mu_{\text{Moon}}}{r_{\text{Moon}}}} = 2.5187 \text{ km/sec}$$

4A.2 Propellants

There are two most promising propellant options for lunar-LEO transport systems. The first is an oxy-hydrogen combination using lunar-derived oxygen and hydrogen imported from Earth. The second option again requires native lunar oxygen as the oxidant but combines terrestrial-imported hydrogen with silicon purified on the Moon to produce a more powerful silane rocket fuel.

(a) Lunar oxygen, terrestrial hydrogen propellant option

The relevant chemical propellant combustion reaction is:

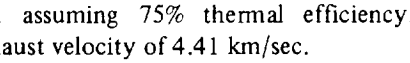

$$2H_2 + O_2 \Rightarrow 2H_2O$$

The molecular weight of H_2 is 2 and of O_2 is 32, so:

$$B_H = \frac{M_{H_2}}{M_{H_2} + M_{O_2}} = \frac{1}{9}$$

The achievable specific impulse of LOX - LH_2 is about 450 sec, using heat of formation data from Weast (1978) and assuming 75% thermal efficiency. This yields an exhaust velocity of 4.41 km/sec.

(b) Lunar oxygen, Earth/lunar silane propellant option

The silane produced on the Moon is assumed here for simplicity to be entirely SiH_4. The propellant chemical reaction is:

$$SiH_4 + 2O_2 \Rightarrow SiO_2 + 2H_2O$$

The molecular weight of SiH_4 is 32, so $B_H = 1/24$. The achievable vacuum specific impulse is within the range 328-378 sec (Lunar and Planetary Institute, 1980). Assuming the middle of the range, $I_{sp} = 353$ and $C = 3.46$ km/sec.

4A.3 References

Lunar and Planetary Institute: Extraterrestrial Materials Processing and Construction, Final Report NSR 09-051-001 Mod #24, Houston, Texas, 1980.

Weast, Robert C., ed.: Handbook of Chemistry and Physics, CRC Press, West Palm Beach, Florida, 1978. Fifty-ninth Edition.

APPENDIX 4B

REVIEW OF CASTING PROCESSES

Casting is a process by which a fluid melt is introduced into a mold, allowed to cool in the shape of the form, and then ejected to make a fabricated part or casing (Lindberg, 1977; Yankee, 1979). Four main elements are required in the process of casting: pattern, mold, cores, and the part. Pattern, the original template from which the mold is prepared, creates a corresponding cavity in the casting material. Cores are used to produce tunnels or holes in the finished mold, and the part is the final output of the process.

Substitution is always a factor in deciding whether other techniques should be used instead of casting. Alternatives include parts that can be stamped out on a punch press or deep-drawn, items that can be manufactured by extrusion or by cold-bending, and parts that can be made from highly active metals.

The casting process is subdivided into two distinct subgroups: (1) expendable and (2) nonexpendable mold casting.

4B.1 Expendable Mold Casting

Expendable mold casting is a generic classification that includes sand, plastic, shell, and investment (lost-wax technique) moldings. All of these involve the use of temporary and nonreusable molds, and need gravity to help force molten fluid into casting cavities – either by artificial gravity or pressure-feeding of molds in a zero-g SMF. Lack of atmosphere should be beneficial to some processes since molten fluids need not displace air.

(a) Sand Casting

Sand casting requires a lead time of days for production at high output rates (1-20 pieces/hr-mold), and is unsurpassed for large-part production. Green (wet) sand has almost no part weight limit, whereas dry sand (more likely with extraterrestrial materials) has a practical part mass limit of 2300-2700 kg. Minimum part weight ranges from 0.075-0.1 kg. Sand in most operations can be recycled many times and requires little additional input. The only serious restriction is the necessity for gravity-feeding the molten liquid. A general manufacturing facility using sand casting might require centrifugal force feeding instead.

Preparation of the sand mold is fast and requires a pattern which can "stamp" out the casting template in a few days. Typically, sand casting is used for processing low-temperature steel and aluminum, magnesium, and nickel alloys. It is by far the oldest and best understood of all techniques. Consequently, automation may easily be adapted to the production process, somewhat less easily to the design and preparation of forms. These forms must satisfy exacting standards as they are the heart of the sand casting process – creating the most obvious necessity for human control.

(b) Plaster Casting

Plaster casting is similar to sand molding except that plaster is substituted for sand. Plaster compound is actually comprised of 70-80% gypsum and 20-30% strengthener and water. Generally, the form takes less than a week to prepare, after which a production rate of 1-10 units/hr-mold is achieved with a capability to pour items as massive as 45 kg and as small as 30 g with very high surface resolution and fine tolerances.

The plaster process requires carbon, a relatively rare substance in nonterrestrial materials, for the gypsum binder. Once used and cracked away, normal plaster cannot easily be recast. The water used in mold production may be recycled during the baking process. Plaster casting is normally used for nonferrous metals such as aluminum-, zinc-, or copper-based alloys. It cannot be used to cast ferrous material because sulfur in gypsum slowly reacts with iron. Also, the plaster process requires gravity or centrifugal injection of casting fluid into the mold. (Prior to mold preparation the pattern is sprayed with a thin film of parting compound to prevent the mold from sticking to the pattern. The unit is shaken so plaster fills the small cavities around the pattern. The form is removed after the plaster sets.)

Plaster casting represents a step up in sophistication and required skill. The automatic functions easily are handed over to robots, yet the higher-precision pattern designs required demand even higher levels of direct human assistance. Another research issue with particular relevance to an extraterrestrial facility is plaster recyclability, so that

each mold (or the materials used to make it) need not be thrown away after just a single use.

(c) Shell Molding

Shell molding is also similar to sand molding except that a mixture of sand and 3-6% resin holds the grains together. Set-up and production of shell mold patterns takes weeks, after which an output of 5-50 pieces/hr-mold is attainable. Aluminum and magnesium products average about 13.5 kg as a normal limit, but it is possible to cast items in the 45-90 kg range. Shell mold walling varies from 3-10 mm thick, depending on the forming time of the resin.

There are a dozen different stages in shell mold processing that include: (1) initially preparing a metal-matched plate; (2) mixing resin and sand; (3) heating pattern, usually to between 505-550 K, (4) investing the pattern (the sand is at one end of a box and the pattern at the other, and the box is inverted for a time determined by the desired thickness of the mill); (5) curing shell and baking it; (6) removing investment; (7) inserting cores; (8) repeating for other half; (9) assembling mold; (10) pouring mold; (11) removing casting; and (12) cleaning and trimming. The sand-resin mix can be recycled by burning off the resin at high temperatures, so the only SMF input using this technique is a small amount of replacement sand and imported resin.

(d) Investment Casting

Investment casting (lost-wax process) yields a finely detailed and accurate product. After a variable lead time, usually weeks, 1-1000 pieces/hr-mold can be produced in the mass range 2.3-2.7 kg. Items up to 45 kg and as light as 30 g are possible for unit production.

To make a casting, a temporary pattern is formed by coating a master mold with plastic or mercury. The pattern is dipped in refractory material (typically a ceramic mixture of Zircon flour and colloidal silicate) leaving a heavier coating 3-16 mm thick. The process requires a constant input of Zircon flour because the mold is expendable, although mercury is recycled by processing in a pressurized positive-gravity environment. The mold is baked and mercury or plastic collected and recycled. The mold is filled, then broken away after hardening.

Investment casting yields exceedingly fine quality products made of all types of metals. It has special applications in fabricating very high temperature metals, especially those which cannot be cast in metal or plaster molds and those which are difficult to machine or work.

4B.2 Nonexpendable Mold Casting

Nonexpendable mold casting differs from expendable processes in that the mold need not be reformed after each production cycle. This technique includes at least four different methods: permanent, die, centrifugal, and continuous casting. Compared with expendable mold processes, nonexpendable casting requires relatively few material inputs from Earth in the context of an orbital SMF.

(a) Permanent Casting

Permanent casting requires a set-up time on the order of weeks, after which production rates of 5-50 pieces/hr-mold are achieved with an upper mass limit of 9 kg per iron alloy item (cf., up to 135 kg for many nonferrous metal parts) and a lower limit of about 0.1 kg. Hot molds are coated with refractory wash or acetylene soot before processing to allow easy removal of the workpiece. Generally, gravity is unnecessary since forced-input feeding is possible. Permanent molds have a life of 3000 castings after which they require redressing. Permanently cast metals generally show 20% increase in tensile strength and 30% increase in elongation as compared to the products of sand casting.

The only necessary terrestrial input is the coating applied before each casting. Typically, permanent mold casting is used in forming iron-, aluminum-, magnesium-, and copper-based alloys. The process is highly automated and state-of-the-art easily could be adapted for use in an extraterrestrial manufacturing facility. The main disadvantage is that the mold is not easy to design or produce automatically. More research is needed on robot production of delicate molds.

(b) Die Casting

In die casting fluid is injected into a mold at high pressures. Set-up time for dies is 1-2 months, after which production rates of 20-200 pieces/hr-mold are normally obtained. Maximum mass limits for magnesium, zinc, and aluminum parts are roughly 4.5 kg, 18 kg, and 45 kg, respectively; the lower limit in all cases is about 30 g. Die injection machines are generally large (up to 3 × 8 m) and operate at high pressures – 1000 kg/cm^2 and higher, although aluminum usually is processed at lower pressure. A well-designed unit produces over 500,000 castings during the production lifetime of a single mold. The major production step is die construction, usually a steel alloy requiring a great deal of skill and fine tooling to prepare. Only nonferrous materials are die cast, such as aluminum-, zinc-, and copper-based alloys.

The only serious difficulty in applying die casting to an SMF is unit cooling. In terrestrial factories, die machines are water- or air-cooled, both difficult in space. There is little water in the system since flash is removed and remelted, but care must be taken to prevent cold welding of parts to dies in a vacuum manufacturing environment. Die casting is readily automated (Miller and Smith, 1979). Present technology already permits semi-automation, but more

research is required on machine design and automatic die mold preparation for space applications.

(c) Centrifugal Casting

Centrifugal casting is both gravity- and pressure-independent since it creates its own force feed using a temporary sand mold held in a spinning chamber at up to 90 g. Lead time varies with the application. Semi- and true-centrifugal processing permit 30-50 pieces/hr-mold to be produced, with a practical limit for batch processing of approximately 9000 kg total mass with a typical per-item limit of 2.3-4.5 kg. A significant advantage of the centrifugal force method is that no external gravity is required, making it ideal for space applications. Sand is easily recycled, so centrifugal processing depends only to a small degree on terrestrial resupply. There is no limit to the types of metals that can be fabricated.

Automation can be utilized in centrifugal casting. The only requirement is the advent of spin-functional robots, research of which should lead to the broader synergistic advancement of other processes normally dependent on gravity to function properly, such as investment casting.

(d) Continuous Casting

Continuous casting, much like centrifugal molding, produces sheets or beams which may undergo further fabrication. Continuous casting was discussed briefly by an MIT study group in the context of SMF design (Miller and Smith, 1979), and involves forcing a melted metal through an open-ended mold. Heat is extracted and metal exits the mold as a solid fabricated sheet. The MIT study suggested that SMF molds, as those on Earth, might be made of graphite. Unfortunately, carbon is rare in space.

Gravity plays no irreplaceable role in continuous casting on Earth – gravity feeds are used, but manufacturing facility casting machines can rely on pressure to feed liquid metal. Molds or "dies" last several weeks, after which graphite must be reworked to original specifications. Metal melting points impose severe restrictions on mold design. Consequently, iron is difficult while aluminum and its alloys are relatively easy to process. The technique already is well-automated and is used to fabricate aluminum and copper alloys, but only on very special applications for iron.

4B.3 Casting in Space Manufacturing

Casting has its limitations in space. Gravity is a major problem but can be overcome with development of centrifugal systems which work in concert with other systems. The cold-welding effect is also of major concern. To overcome this, it is suggested that fabrication should take place within a closed atmospheric unit.

Lunar basalt molds possibly may replace iron molds. But basalt has a low coefficient of thermal conduction and more research is needed to ensure feasibility of the concept. Lunar basalt should provide adequate molds for aluminum alloys as the former melts at 1753 K (1480°C) and the latter around 873 K (600°C).

These problems are hardly intractable. In the long term, the issues of fully autonomous production, refurbishing of patterns and molds, automatic process control systems, and the application of robotics and other advanced automation techniques to casting technology, must all be addressed.

4B.4 References

Lindberg, Roy A.: Processes and Materials of Manufacture. Second Ed. Allyn and Bacon, Boston, 1977.

Miller, R. H.; and Smith, D. B. S.: Extraterrestrial Processing and Manufacturing of Large Space Systems, NASA CR-161293, 1979.

Yankee, H. W.: Manufacturing Processes. Prentice-Hall, Englewood Cliffs, New Jersey, 1979.

APPENDIX 4C

REVIEW OF POWDER METALLURGY

Powder metallurgy is a forming and fabrication technique consisting of three major processing stages. First, the primary material is physically powdered – divided into many small individual particles. Next, the powder is injected into a mold or passed through a die to produce a weakly cohesive structure very near the true dimensions of the object ultimately to be manufactured. Finally, the end part is formed by applying pressure, high temperature, long setting times (during which self-welding occurs), or any combination thereof. Powder metallurgy technologies may be utilized by minimum initial support facilities to prepare a widening inventory of additional manufacturing techniques, and offer the possibility of creating "seed factories" able to grow into more complex production facilities which can generate many special products in space. The following sections review the basics of powder metallurgy (Jones, 1960).

The history of powder metallurgy and the art of metals and ceramics sintering are intimately related. Sintering involves the production of a hard solid metal or ceramic piece from a starting powder. There is evidence that iron powders were fused into hard objects as early as 1200 BC (Jones, 1960). In these early manufacturing operations, iron was extracted by hand from metal sponge following reduction and was then reintroduced as a powder for final melting or sintering.

A much wider range of products can be obtained using powder processes than from direct alloying of fused materials. In melting operations the "phase rule" applies to all pure and combined elements and strictly dictates the distribution of liquid and solid phases which can exist for specific compositions. In addition, whole body melting of starting materials is required for alloying, thus imposing unwelcome chemical, thermal, and containment constraints on manufacturing. Unfortunately, the handling of aluminum/iron powders poses major problems (Sheasby, 1979). Other substances that are especially reactive with atmospheric oxygen, such as tin (Makhlouf *et al.*, 1979), are sinterable in special atmospheres or with temporary coatings. Such materials may be manipulated far more extensively in controlled environments in space.

In powder metallurgy or ceramics it is possible to fabricate components which otherwise would decompose or disintegrate. All considerations of solid-liquid phase changes can be ignored, so powder processes are more flexible than casting, extrusion forming, or forging techniques. Controllable characteristics of products prepared using various powder technologies include mechanical, magnetic (Kahn, 1980), and other unconventional properties of such materials as porous solids, aggregates, and intermetallic compounds. Competitive characteristics of manufacturing processing (e.g., tool wear, complexity, or vendor options) also may be closely regulated.

4C.1 Cold Welding

Cold or contact welding was first recognized as a general materials phenomenon in the 1940s. It was then discovered that two clean, flat surfaces of similar metal would strongly adhere if brought into contact under vacuum. It is now known that the force of adhesion following first contact can be augmented by pressing the metals tightly together, increasing the duration of contact, raising the temperature of the workpieces, or any combination of the above. Research has shown that even for very smooth metals, only the high points of each surface, called "asperites," touch the opposing piece. Perhaps, as little as a few thousandths of a percent of the total surface is involved. However, these small areas of taction develop powerful molecular connections – electron microscope investigations of contact points reveal that an actual welding of the two surfaces takes place after which it is impossible to discern the former asperitic interface. If the original surfaces are sufficiently smooth the metallic forces between them eventually draw the two pieces completely together and eliminate even the macroscopic interface.

Exposure to oxygen or certain other reactive compounds produces surface layers which reduce or completely eliminate the cold welding effect. This is especially true if, say, a metal oxide has mechanical properties similar to those of the parent element (or softer), in which case surface deformations do not crack the oxide film. Fortunately, the extremely low concentrations of contaminating gases in free space (less than 10^{-14} torr is achievable) should produce minimal coating, so cold welding effects can persist on fresh metal surfaces for very long periods. Contact welding promises a convenient and powerful capability for producing complex objects from metallic powders in space with a minimum of support equipment.

Powders use cold welding to best advantage because they present large surface areas over which vacuum contact can occur. For instance, a 1 cm cube of metal comminuted into 240-100 mesh-sieved particles (60-149 μm) yields approximately 1.25×10^6 grains having a total surface area of 320 cm^2. This powder, reassembled as a cube, would be about twice as big as before since half the volume consists of voids.

If a strong final product is desired, it is important to obtain minimum porosity (that is, high starting density) in the initial powder-formed mass. Minimum porosity results in less dimensional change upon compression of the workpiece as well as lower pressures, decreased temperatures, and less time to prepare a given part. Careful vibratory settling reduces porosity in monodiameter powders to less than 40%. A decrease in average grain size does not decrease porosity, although large increases in net grain area will enhance the contact welding effect and markedly improve the "green strength" of relatively uncompressed powder. In space applications cold welding in the forming stage may be adequate to produce usable hard parts, and molds may not even be required to hold the components for subsequent operations such as sintering.

Hard monodiameter spheres packed like cannonballs into body-centered arrays give a porosity of about 25%, significantly lower than the ultimate minimum of 35% for vibrated collections of monodiameter spheres. (The use of irregularly shaped particles produces even more porous powders.) Porosity further may be reduced by using a selected range of grain sizes, typically 3-6 carefully chosen gauges in most terrestrial applications. Theoretically, this should permit less than 4% porosity in the starting powder, but with binary or tertiary mixtures 15-20% is more the rule. Powders comprised of particles having a wide range of sizes, in theory, can approach 0% porosity as the finest grains are introduced. But powder mixtures do not naturally pack to the closest configuration even if free movement is induced by vibration or shaking. Gravitational differential settling of the mixture tends to segregate grains in the compress, and some degree of cold welding occurs immediately upon formation of the powder compress which generates internal frictions that strongly impede further compaction. Considerable theoretical and practical analyses already exist to assist in understanding the packing of powders (Dexter and Tanner, 1972; Criswell, 1975; Powell, 1980a, 1980b; Shahinpoor, 1980; Spencer and Lewis, 1980; Visscher and Bolsterzi, 1972).

Powder metallurgy in zero-g airless space or on the Moon offers several potential advantages over similar applications on Earth. For example, cold-welding effects will be far more pronounced and dependable due to the absence of undesirable surface coatings. Gravitational settling in polydiameter powder mixtures can largely be avoided, permitting the use of broader ranges of grain sizes in the initial compact and correspondingly lower porosities. Finally, it should be possible to selectively coat particles with special films which artificially inhibit contact welding until the powder mixture is properly shaped. (The film is then removed by low heat or by chemical means, forming the powder in zero-g conditions without a mold.)

Moderate forces applied to a powder mass immediately cause grain rearrangements and superior packing. Specifically, pressures of 10^5 Pa (N/m^2) decrease porosity by 1-4%; increasing the force to 10^7 Pa gains only an additional 1-2%. However, at still higher pressures or if heat is applied the distinct physical effects of particle deformation and mass flow become significant. Considerably greater force is required mechanically to close all remaining voids by plastic flow of the compressed metal.

4C.2 Sintering

Sintering is the increased adhesion between particles as they are heated. In most cases the density of a collection of grains increases as material flows into voids causing a decrease in overall size. Mass movements which occur during sintering consist of the reduction of total porosity by repacking, followed by material transport due to evaporation and condensation with diffusion. In the final stages metal atoms move along crystal boundaries to the walls of internal pores, redistributing mass from the internal bulk of the object and smoothening pore walls.

Most, if not all, metals may be sintered. This is especially true of pure metals produced in space which suffer no surface contamination. Many nonmetallic substances also sinter, such as glass, alumina, silica, magnesia, lime, beryllia, ferric oxide, and various organic polymers. The sintering properties of lunar materials have been examined in detail (Simonds, 1973). A great range of material properties can be obtained by sintering with subsequent reworking. Physical characteristics of various products can be altered by changing density, alloying, or heat treatments. For instance, the tensile strength E_n of sintered iron powders is insensitive to sintering time, alloying, or particle size in the original powder, but is dependent upon the density (D) of the final product according to $E_n/E = (D/d)^{3.4}$, where E is Young's Modulus and d is the maximum density of iron.

Particular advantages of this powder technology include: (1) the possibility of very high purity for the starting materials and their great uniformity; (2) preservation of purity due to the restricted nature of subsequent fabrication steps; (3) stabilization of the details of repetitive operations by control of grain size in the input stages; (4) absence of stringering of segregated particles and inclusions as often occurs in melt processes; and (5) no deformation is required to produce directional elongation of grains (Clark, 1963). There exists a very large literature on sintering dissimilar materials for solid/solid phase compounds or solid/melt mixtures in the processing stage. As previously noted (and see below), any substance which can be melted may also be

atomized using a variety of powder production techniques. Finally, when working with pure elements, scrap remaining at the end of parts manufacturing may be recycled through the powdering process for reuse.

4C.3 Powder Production Techniques

Any fusible material can be atomized. Several techniques have been developed which permit large production rates of powdered particles, often with considerable control over the size ranges of the final grain population. Powders may be prepared by comminution, grinding, chemical reactions, or electrolytic deposition. Several of the melting and mechanical procedures are clearly adaptable to operations in space or on the Moon.

Powders of the elements Ti, V, Th, Cb, Ta, Ca, and U have been produced by high-temperature reduction of the corresponding nitrides and carbides. Fe, Ni, U, and Be submicron powders are obtained by reducing metallic oxalates and formates. Exceedingly fine particles also have been prepared by directing a stream of molten metal through a high-temperature plasma jet or flame, simultaneously atomizing and comminuting the material. On Earth various chemical- and flame-associated powdering processes are adopted in part to prevent serious degradation of particle surfaces by atmospheric oxygen. Powders prepared in the vacuum of space will largely avoid this problem, and the availability of zero-g may suggest alternative techniques for the production of spherical or unusually shaped grains.

Two powdering techniques which appear especially applicable to space manufacturing are atomization and centrifugal disintegration. Direct solar energy can be used to melt the working materials, so the most energy-intensive portion of the operation requires a minimum of capital equipment mass per unit of output rate since low-mass solar collectors can be employed either on the Moon or in space. Kaufman (1979) has presented estimates of the total energy input of the complete powdering process in the production of iron parts. The two major energy input stages – powder manufacturing and sintering – require 5300 kW-hr/t and 4800 kW-hr/t, respectively. At a mean energy cost of \$0.025/kW-hr, this corresponds to \$250/t or about \$0.11/kg. Major savings might be possible in space using solar energy.

Atomization is accomplished by forcing a molten metal stream through an orifice at moderate pressures. A gas is introduced into the metal stream just before it leaves the nozzle, serving to create turbulence as the entrained gas expands (due to heating) and exits into a large collection volume exterior to the orifice. The collection volume is filled with gas to promote further turbulence of the molten metal jet. On Earth, air and powder streams are segregated using gravity or cyclone devices. Cyclone separators could be used in space, although an additional step would be required – introduction of the powder into a pumping chamber so that the working gas may be removed and reused. Evacuated metal would then be transferred to the zero-pressure portion of the manufacturing facility. Figures 4.24 and 4.25 present schematics of major functional units of terrestrial facilities for metal atomization (DeGarmo, 1979; Jones, 1960).

Simple atomization techniques are available in which liquid metal is forced through an orifice at a sufficiently high velocity to ensure turbulent flow. The usual performance index used is the Reynolds number $R = fvd/n$, where f = fluid density, v = velocity of the exit stream, d = diameter of the opening, and n = absolute viscosity. At low R the liquid jet oscillates, but at higher velocities the stream becomes turbulent and breaks into droplets. Pumping energy is applied to droplet formation with very low efficiency (on the order of 1%) and control over the size distribution of the metal particles produced is rather poor. Other techniques such as nozzle vibration, nozzle asymmetry, multiple impinging streams, or molten-metal injection into ambient gas are all available to increase atomization efficiency, produce finer grains, and to narrow the particle size distribution. Unfortunately, it is difficult to eject metals through orifices smaller than a few millimeters in diameter, which in practice limits the minimum size of powder grains to approximately 10 μm. Atomization also produces a wide spectrum of particle sizes, necessitating downstream classification by screening and remelting a significant fraction of the grain.

Centrifugal disintegration of molten particles offers one way around these problems, as shown in figure 4.25(a). Extensive experience is available with iron, steel, and aluminum (Champagne and Angers, 1980). Metal to be powdered is formed into a rod which is introduced into a chamber through a rapidly rotating spindle. Opposite the spindle tip is an electrode from which an arc is established which heats the metal rod. As the tip material fuses, the rapid rod rotation throws off tiny melt droplets which solidify before hitting the chamber walls. A circulating gas sweeps particles from the chamber. Similar techniques could be employed in space or on the Moon. The chamber wall could be rotated to force new powders into remote collection vessels (DeGarmo, 1979), and the electrode could be replaced by a solar mirror focused at the end of the rod.

An alternative approach capable of producing a very narrow distribution of grain sizes but with low throughput consists of a rapidly spinning bowl heated to well above the melting point of the material to be powdered. Liquid metal, introduced onto the surface of the basin near the center at flow rates adjusted to permit a thin metal film to skim evenly up the walls and over the edge, breaks into droplets, each approximately the thickness of the film (Jones, 1960).

Figure 4.25(b) illustrates another powder-production technique. A thin jet of liquid metal is intersected by high-speed streams of atomized water which break the jet into drops and cool the powder before it reaches the bottom of

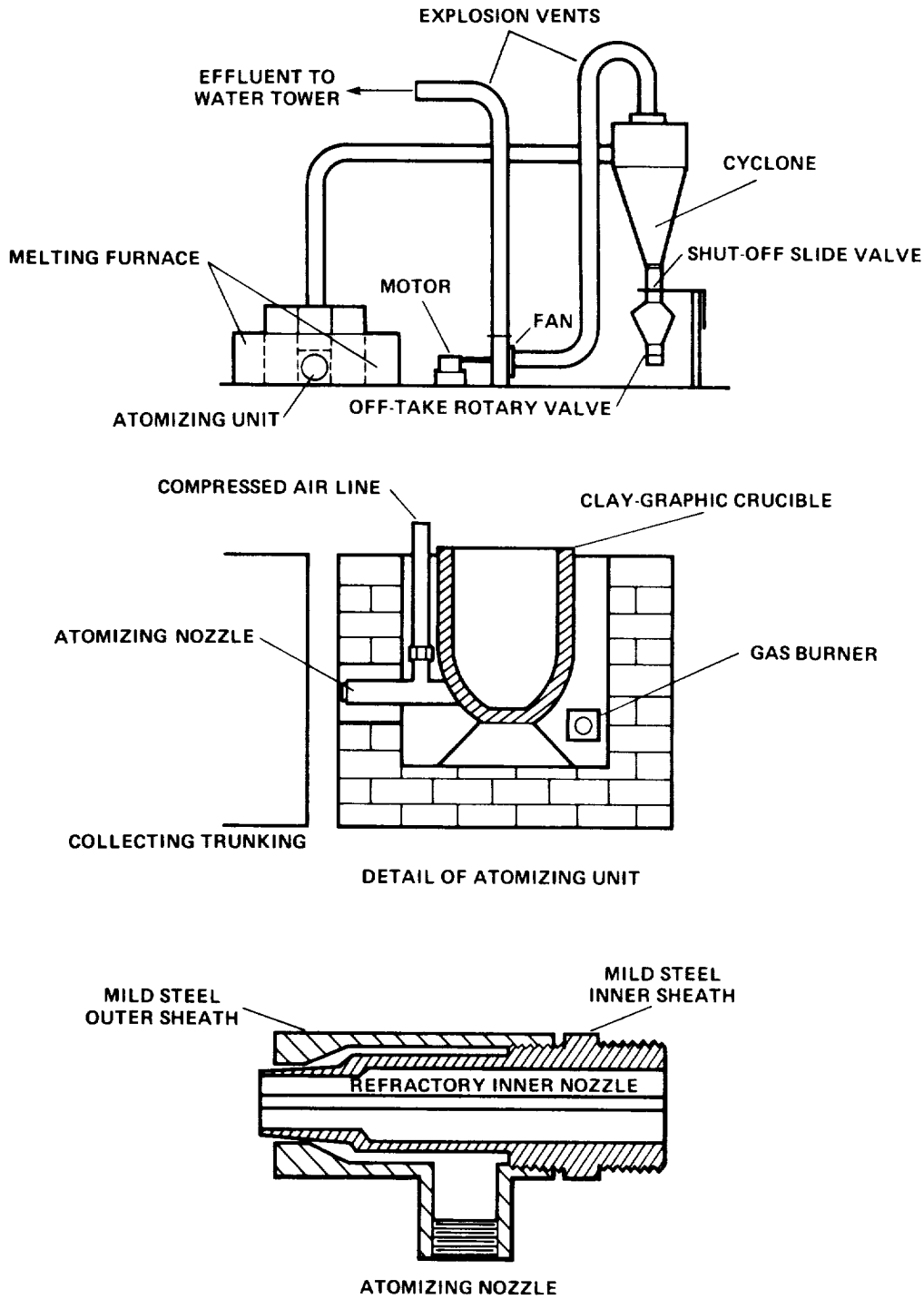

Figure 4.24.– Schematics of an aluminum atomization plant. (From Jones, 1960.)

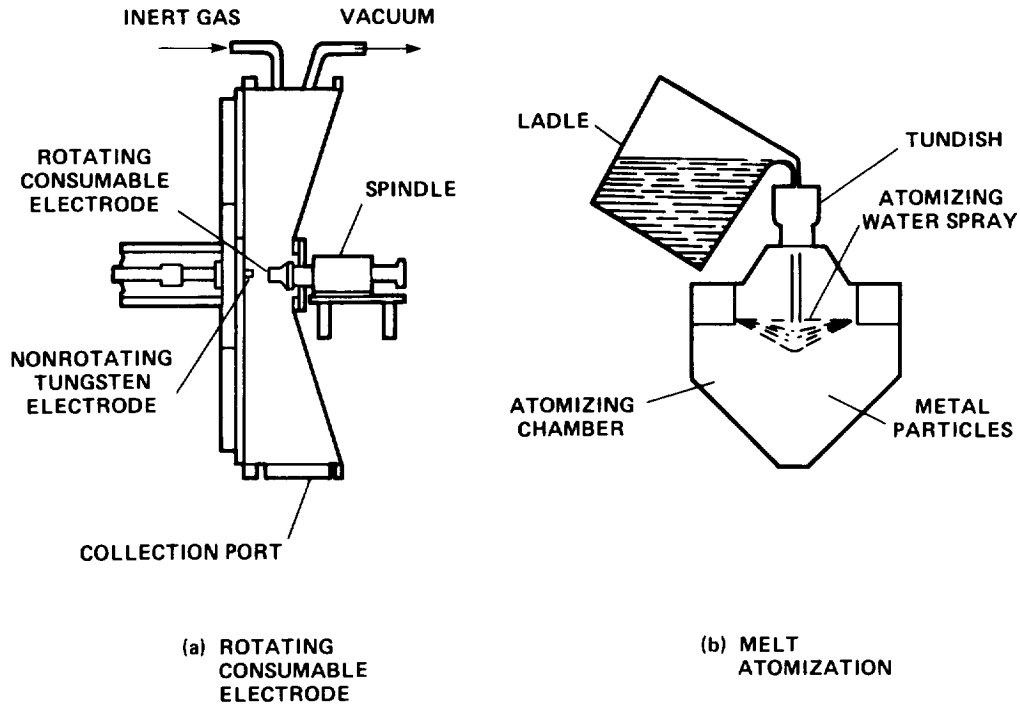

Figure 4.25.– Two methods for producing metal powders. (From Jones, 1960.)

the bin. In subsequent operations the powder is dried. In space applications it would be necessary to recycle the water or other atomizing fluid.

Finally, mills are now available which can impart enormous rotational torques on powders, on the order of 20×10^6 rpm. Such forces cause grains to disintegrate into yet finer particles. Operations in free space should permit a variety of related approaches.

4C.4 Powder Pressing

An extensive literature on the various aspects of powder pressing is available and growing rapidly. Although many products such as pills and tablets for medical use are cold-pressed directly from powdered materials, normally the resulting compact is only strong enough to allow subsequent heating and sintering. Release of the compact from its mold is usually accompanied by a small volume increase called "spring-back." In space, compact strength should far exceed that on Earth due to powerful cold-welding effects on pristine grain surfaces.

In some pressing operations (such as hot isostatic pressing) compact formation and sintering occur simultaneously. This procedure, together with explosion-driven compressive techniques, is used extensively in the production of high-temperature and high-strength parts such as turbine blades for jet engines. In most applications of powder metallurgy the compact is hot-pressed, heated to a temperature above which the materials cannot remain work-hardened. Hot pressing lowers the pressures required to reduce porosity and speeds welding and grain deformation processes. Also it permits better dimensional control of the product, lessened sensitivity to physical characteristics of starting materials, and allows powder to be driven to higher densities than with cold pressing, resulting in higher strength. Negative aspects of hot pressing include shorter die life, slower throughput because of powder heating, and the frequent necessity for protective atmospheres during forming and cooling stages.

One recently developed technique for high-speed sintering involves passing high-amperage electrical current through a powder to preferentially heat the asperities. Most of the energy serves to melt that portion of the compact where migration is desirable for densification; comparatively little energy is absorbed by the bulk materials and forming machinery. Naturally, this technique is not applicable to electrically insulating powders (DeGarmo, 1979).

4C.5 Continuous Powder Processing

The phrase "continuous process" should be used only to describe modes of manufacturing which could be extended indefinitely in time. Normally, however, the term refers to processes whose products are much longer in one physical

dimension than in the other two. Compression, rolling, and extrusion are the most common examples (Jones, 1960).

In a simple compression process, powder flows from a bin onto a two-walled channel and is repeatedly compressed vertically by a horizontally stationary punch. After stripping the compress from the conveyor the compact is introduced into a sintering furnace. An even easier approach is to spray powder onto a moving belt and sinter it without compression. Good methods for stripping cold-pressed materials from moving belts are hard to find. One alternative that avoids the belt-stripping difficulty altogether is the manufacture of metal sheets using opposed hydraulic rams, although weakness lines across the sheet may arise during successive press operations.

Powders can be rolled into sheets or more complex cross-sections, which are relatively weak and require sintering. It is possible that rolling and sintering processes can be combined, which necessitates relatively low roller speeds. Powder rolling is normally slow, perhaps 0.01-0.1 m/sec. This is due in part to the need to expel air from compressed powder during terrestrial manufacture, a problem which should be far less severe in space applications. Considerable work also has been done on rolling multiple layers of different materials simultaneously into sheets.

Extrusion processes are of two general types. In one type, the powder is mixed with a binder or plasticizer at room temperature; in the other, the powder is extruded at elevated temperatures without fortification. Extrusions with binders are used extensively in the preparation of tungsten-carbide composites. Tubes, complex sections, and spiral drill shapes are manufactured in extended lengths and diameters varying from 0.05-30 cm. Hard metal wires 0.01 cm diam have been drawn from powder stock. At the opposite extreme, Jones (1960) considers that large extrusions on a tonnage basis may be feasible. He anticipates that problems associated with binder removal, shrinkage from residual porosity during sintering, and maintenance of overall dimensional accuracies are all controllable. Low die and pressure cylinder wear are expected. Also, it seems quite reasonable to extrude into a vacuum.

There appears to be no limitation to the variety of metals and alloys that can be extruded, provided the temperatures and pressures involved are within the capabilities of die materials. Table 4.25 lists extrusion temperatures of various common metals and alloys. Extrusion lengths may range from 3-30 m and diameters from 0.2-1.0 m. Modern presses are largely automatic and operate at high speeds (on the order of m/sec). Figure 4.26 illustrates seven different processes for generating multilayer powder products by sheathed extrusion.

TABLE 4.25.– EXTRUSION TEMPERATURES OF COMMON METALS AND ALLOYS

Metals and alloys	Temperature of extrusion, K
Aluminum and alloys	673-773
Magnesium and alloys	573-673
Copper	1073-1153
Brasses	923-1123
Nickel brasses	1023-1173
Cupro-nickel	1173-1273
Nickel	1383-1433
Monel	1373-1403
Inconel	1443-1473
Steels	1323-1523

4C.6 Special Products

Many special products are possible with powder-metallurgy technology. A nonexhaustive list includes Al_2O_3 whiskers coated with very thin oxide layers for improved refractories; iron compacts with Al_2O_3 coatings for improved high-temperature creep strength; light-bulb filaments made with powder technology; linings for friction brakes; metal glasses for high-strength films and ribbons; heat shields for spacecraft reentry into Earth's atmosphere; electrical contacts for handling large current flows; magnets; microwave ferrites; filters for gases; and bearings which can be infiltrated with lubricants. The product list can be considerably expanded using terrestrial materials. A profitable line of research would be to determine which elements if brought to LEO could offer especially large multiplier effects in terms of the ratio of lunar-materials mass to Earth-supplied mass.

Extremely thin films and tiny spheres exhibit high strength. One application of this observation is to coat brittle materials in whisker form with a submicron film of much softer metal (e.g., cobalt-coated tungsten). The surface strain of the thin layer places the harder metal under compression, so that when the entire composite is sintered the rupture strength increases markedly. With this method, strengths on the order of 2.8 GPa versus 550 MPa have been observed for, respectively, coated (25% Co) and uncoated tungsten carbides. It is interesting to consider whether similarly strong materials could be manufactured from aluminum films stretched thin over glass fibers (materials relatively abundant in space).

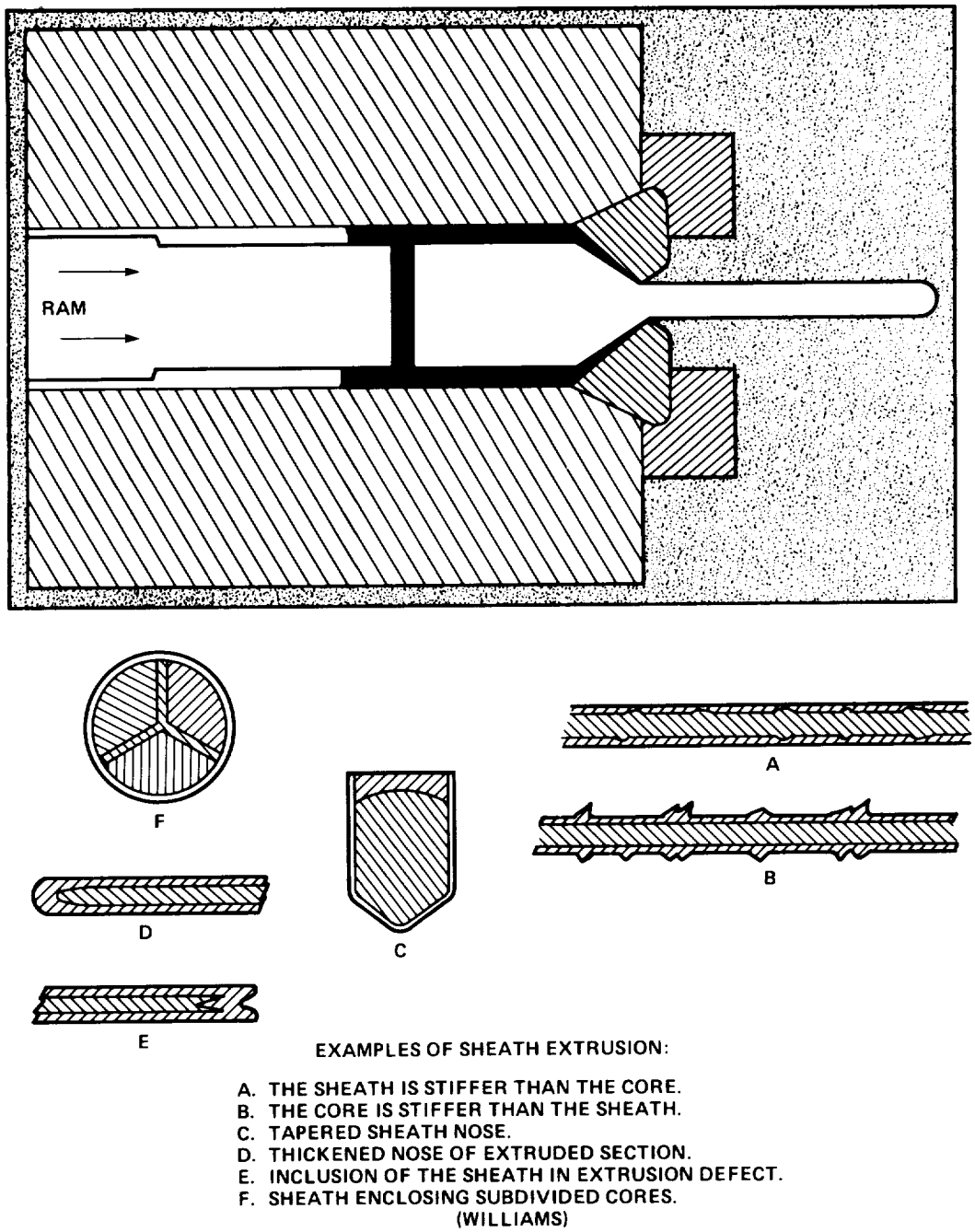

Figure 4.26.– Multilayer powder product production using sheathed extrusion. (From Jones, 1960.)

4C.7 References

Champagne, B.; and Angers, R.: Fabrication of Powders by the Rotating Electrode Process. Intern. J. Powder Metallurgy and Powder Tech., vol. 16, no. 4, October 1980, pp. 359-367.

Clark, Frances: Advanced Techniques in Powder Metallurgy. Rowan and Littlefield, 1963.

Criswell, David R.: The Rosiwal Principle and the Regolithic Distributions of Solar Wind Elements. Proc. 6th Lunar Sci. Conf., Pergamon Press, New York, 1975, pp. 1967-1987.

DeGarmo, E. P.: Materials and Processes in Manufacturing. Fifth edition. Macmillan, New York, 1979.

Dexter, A. R.; and Tanner, D. W.: Packing Densities of Mixtures of Spheres with Log-Normal Size Distributions. Nature (Physical Science), vol. 238, no. 80, 10 July 1972, pp. 31-32.

Jones, W. D.: Fundamental Principles of Powder Metallurgy. Edward Arnold Ltd., London, 1960.

Khan, M. K.: The Importance of Powder Particle Size and Flow Behavior in the Production of P/M Parts for Soft Magnetic Applications. Intern. J. Powder Metallurgy and Powder Tech., vol. 16, no. 2, April 1980, pp. 123-130.

Kaufman, S. M.: Energy Consumption in the Manufacture of Precision Metal Parts from Iron Powders. Intern. J. Powder Metallurgy and Powder Tech., vol. 15, no. 1, Jan. 1979, pp. 9-20.

Makhlouf, M. M.; Mouid, A. M.; and Merchant, H. D.: Sintering of Chemically Preconditioned Tin Powder. Intern. J. Powder Metallurgy and Powder Tech., vol. 15, no. 3, July 1979, pp. 231-237.

Powell, M. J.: Computer-Simulated Random Packing of Spheres. Powder Technology, vol. 25, no. 1, 1980, pp. 45-52.

Powell, M. J.: Distribution of Near-Neighbors in Randomly Packed Hard Spheres. Powder Technology, vol. 26, no. 2, 1980, pp. 221-223.

Shahinpoor, M.: Statistical Mechanical Considerations on the Random Packing of Granular Materials. Powder Technology, vol. 25, no. 2, 1980, pp. 163-176.

Sheasby, J. S.: Powder Metallurgy of Iron-Aluminum. Intern. J. Powder Metallurgy and Powder Tech., vol. 15, no. 4, Oct. 1979, pp. 301-305.

Simonds, C. H.: Sintering and Hot Pressing of Fra Mavro Composition Glass and the Lithification of Lunar Breccias. Amer. J. Sci., vol. 273, May 1973, pp. 428-429.

Spencer, B. B.; and Lewis, B. E.: HP-67-97 and TI-59 Programs to Fit the Normal and Log-Normal Distribution Functions by Linear Regression. Powder Technology, vol. 27, no. 2, 1980, pp. 219-226.

Visscher, W. H.; and Bolsterzi, M.: Random Packing of Equal and Unequal Spheres in Two and Three Dimensions. Nature, vol. 239, no. 5374, 27 October 1972, pp. 504-507.

APPENDIX 4D

REVIEW OF DEFORMATION IN MANUFACTURING

Deformation involves the production of metal parts from ingots, billets, sheets, and other feedstock. Metal is forced to assume new shapes by the application of large mechanical forces to the material while it is either hot or cold. The purpose of this mechanical working is twofold: first, to bring the feedstock into a desired shape, and second, to alter the structure and properties of the metal in a favorable manner (e.g., strengthening, redistribution of impurities).

4D.1 Deformation Techniques

A number of major deformation techniques are described below with emphasis on currently automated techniques, followed by an overview of deformation criteria in space manufacturing applications.

(a) Forging

The deformation of metal into specific shapes includes a family of impact or pressure techniques known as forging. Basic forging processes are smith or hammer forging, drop forging, press forging, machine or upset forging, and roll forging. Special forging processes include ring rolling, orbital forging or rotaforming, no-draft forging, high-energy-rate forming, cored forging, wedge rolling, and incremental forging.

Unimate and Prab industrial robots are already employed in many commercial forge shops. For example, the 2000A Unimate is currently used to feed billets through a two-cavity die-forging press to be formed into raw differential side gears (Unimation, 1979). A more sophisticated robot, the 4000A three-axis Unimate, is used to transfer hot (~1400 K) diesel engine crankshafts from a forging press into a twister (fig. 4.27). The Unimate used in this operation has a 512-step memory, rotary-motion mirror imaging, and memory-sequence control with one base and one subroutine (Unimation, 1979). Forging systems involving gas, steam, or hydraulic drives are excluded from consideration in space or lunar factories since, in general, any system susceptible to fluid leakage is of lower developmental priority for space operations than other processes with similar capabilities.

The energy required for single-drop forging is a function of the mass and velocity of the ram, exclusive of energy to rough form or to heat the parts for the forge. This assumes only a single pass and not the usual progressive steps to create a metal form from one die impression to the next. One modification to be considered in gravity-fall (drop) forging on the Moon is mass enhancement by sintered iron weights, possibly coupled with electromagnetic acceleration (only electrical energy is needed for lunar factory forging processes). Impact forging by electromagnetically driven opposing die sets may produce still closer parts tolerances than drop forging.

Forging operations, from raw precut feedstock to ejected forging, likely can be completely automated on the Moon.

(b) Rolling

Space manufacturing applications of rolling mills have been considered by Miller and Smith (1979). Automated stop-go operations for the rolling mill, slicer, striater, trimmers, welders, and winders in figure 4.28 readily may be visualized. It is important to note that aluminum is the resource considered and ribbon is the processed form. Lunar aluminum-rich mineral recovery, extraction, and processing make good sense since beam builders in Earth orbital space already have been designed for aluminum ribbon feedstock.

Two types of rolling mills can manufacture ribbon from aluminum alloy slabs prepared from lunar anorthosite. The first or regular type of mill consists of a series of rolling stands with lead-in roughing rollers and finishing rollers at the end. Input slabs travel through one stand after another and are reduced in thickness at each stand. Each stand rolls the slab once. High production rates result. A second option is the reversing mill. Slabs are routed back and forth through the same stand several times and are reduced in thickness during each pass. This requires a mill with movable rolls able to continually tighten the gap as slabs grow thinner. Although reversing mills have lower production rates and are more complicated than regular rolling mills, they are more versatile and require fewer machines. Expected yearly aluminum production at the SMF designed by Miller and Smith (1979) is minimal by normal rolling mill standards, so low-mass reversing mills are sufficient for the present reference SMF.

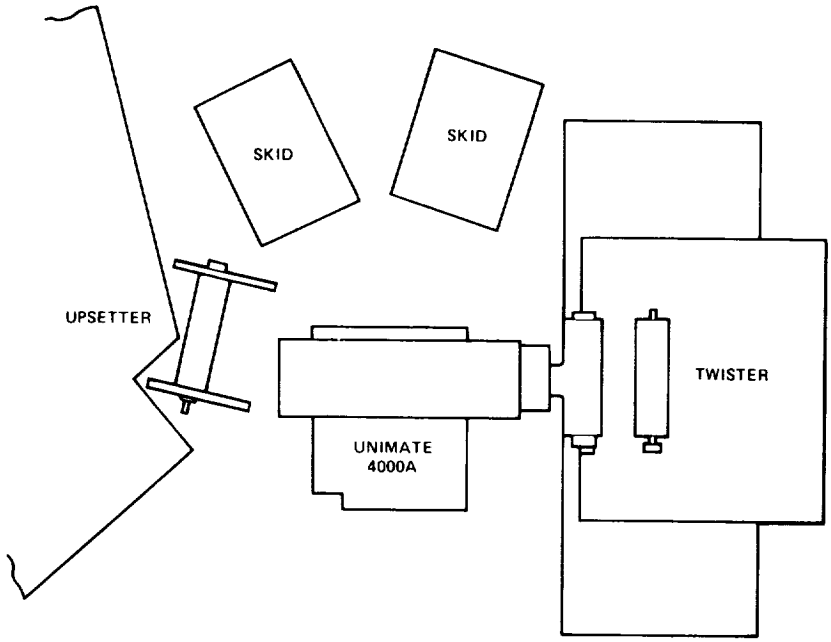

INSTALLATION LAYOUT

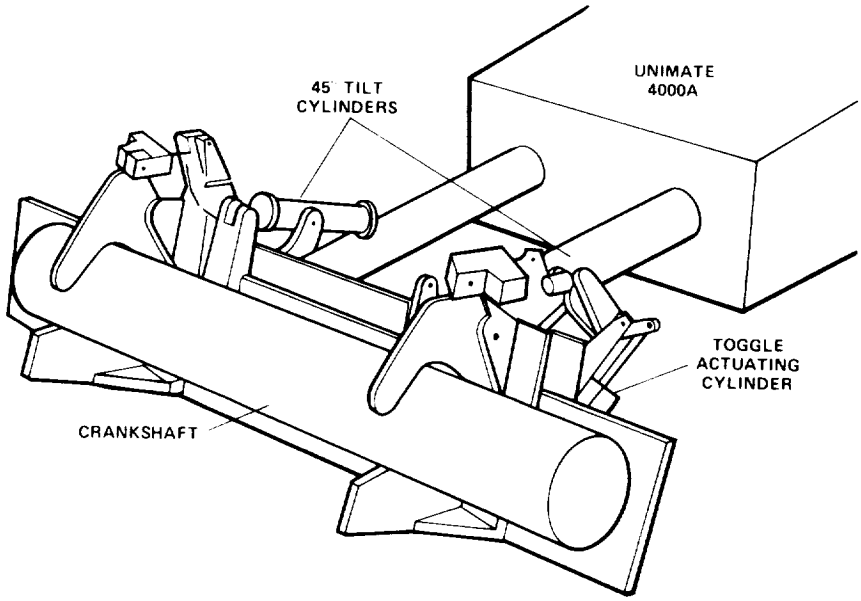

SPECIAL HAND DESIGN

Figure 4.27.– Application of 4000A three-axis Unimate to the production of forged diesel engine crankshafts (upsetter is a double-acting mechanical forge press operating in the horizontal plane).

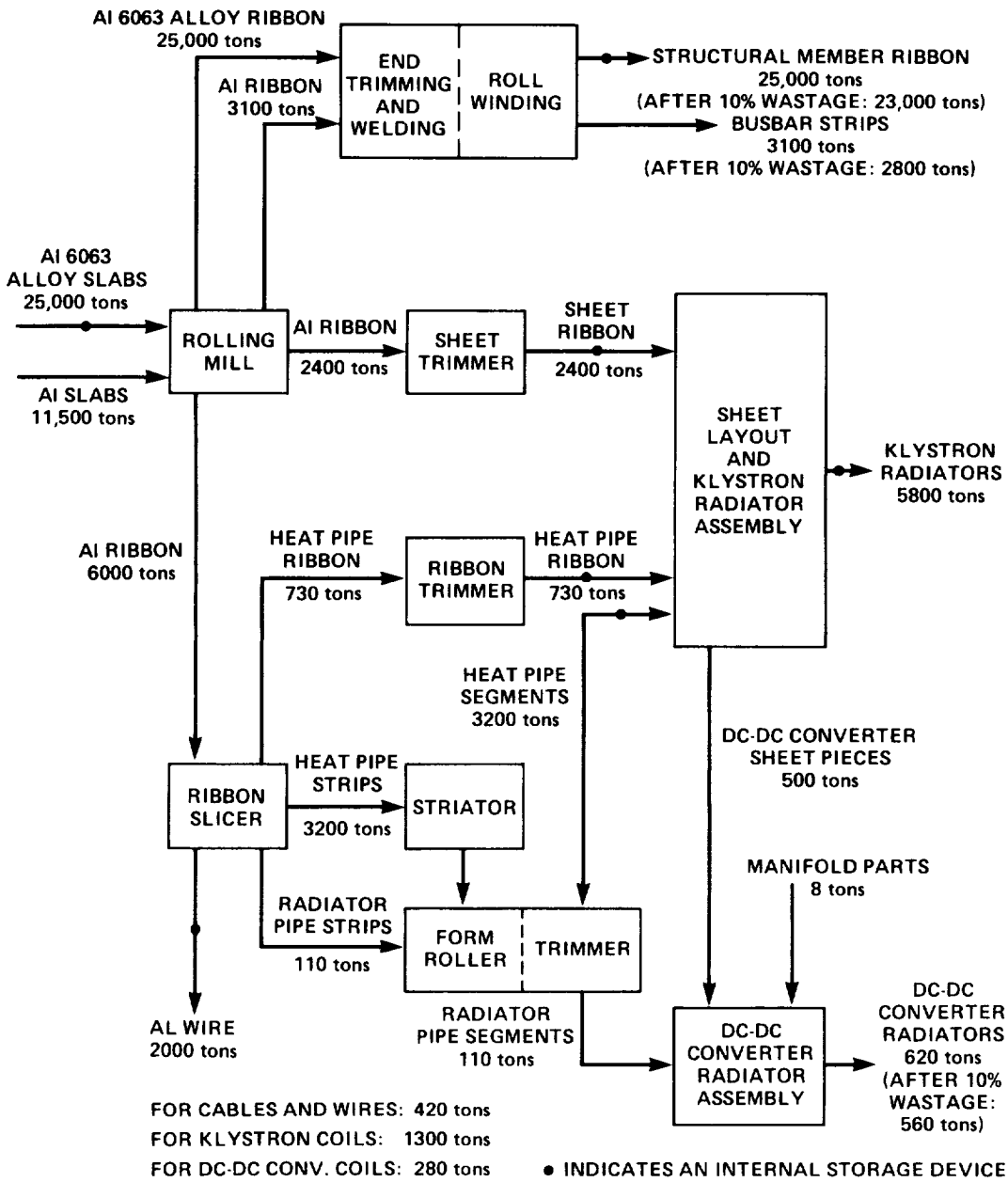

Figure 4.28.– Ribbon and sheet operations; detailed layout for proposed SMF system.

Input slabs can be hot-rolled or cold-rolled. However, if a cold aluminum alloy slab is rolled to more than 120% of its input length, cracks appear in the material. To avoid this problem, slabs are annealed between passes or are rolled hot throughout the process. (The final rolling pass should be done cold to improve the structural properties of the output.) Miller and Smith (1979) chose to hot-roll the input slabs, which, therefore, either travel directly from the continuous caster to the rolling mill without cooling or are taken from intermediate storage and preheated before insertion into the mill. Aluminum alloy slabs elongate roughly by a factor of 11 as they are squeezed from a thickness of 2 cm down to 1.77 mm. Rolling also widens the slabs from 70 to 73.5 cm, the width required for structural member ribbon. Input slab length is arbitrary and often is determined merely by handling convenience, though slabs usually are at least as long as they are wide. An 80-cm-long slab produces about 8.8 m of ribbon.

(c) Special Forming Operations

The following forming operations are considered as a group with respect to robotics applications and lunar factory criteria: conventional stretching, conventional drawing (involving nine suboperations) and deep drawing, swaging, spinning, and bending.

Stretching is a cold-forming process in which sheet metal is wrapped around an upward-moving form block. Conventional drawing involves pressing a flat metal blank into a female die while stretching the blank to force it to conform to the shape of a male die or punch. Shallow drawing is defined as a deformation cup no deeper than half its diameter with little thinning of the metal, whereas, deep drawing produces a cup whose depth may exceed its diameter with more pronounced wall thinning. Swaging is a cold-forging process in which an impact or compressive force causes metal to flow in a predetermined direction. Spinning is a forming technique for plastically deforming a rapidly rotating flat disk against a rotating male contour. Cold spinning is used for thin sheets of metal. Hot-spinning of heavier sheets up to 150 mm thick can produce axisymmetric (shell) shapes. Finally, bending is the plastic deformation of metals about a linear axis with little or no change in the surface area.

Robotics applications and space manufacturing options for these types of deformation processes are minimal, especially under vacuum conditions. If there is no oxidized film on the metal, the workpiece and die may contact weld, causing the machine to seize.

(d) Extrusion

In the extrusion process, either at high or low temperatures, metal is compressively forced through a suitably shaped die to form a product with reduced cross-section – like squeezing toothpaste from a tube. Lead, copper, aluminum, magnesium, and their many alloys are commonly employed, and hydrostatic extrusion using high-pressure fluids into the die makes possible similar processing of relatively brittle materials such as molybdenum, beryllium, and tungsten. Steel is relatively difficult to extrude because of its high-yield strength and its tendency to weld to die walls. Extrusion by pressurizing solid metals shares with other deformation processes problems of cold welding. However, the degree of such welding decreases if markedly dissimilar metals are in contact. The vacuum environment may enhance ductility for some extruded metals.

In one variant of the basic extrusion process, melts are drawn through dies to produce threads. The use of basalt in preparing spun products is well known (Kopecky and Voldan, 1965; Subramanian et al., 1975, 1979) and has numerous lunar applications (see table 4.16). A variation of the technique is the use of centrifugal force to spin the extruded threads (Mackenzie and Claridge, 1979).

In commercial spun basalt processes, molten basalt is drawn through a platinum-rhodium bushing and the final fiber blasted by a tangential gas or steam jet in the air cone as shown in figure 4.7. Fibers also may be produced without the air cone by direct pulling of a winding reel. For example, work done by Subramanian et al. (1975) showed that molten basalt flowing from a 3-mm hole in a graphite crucible, yielded fibers by simple mechanical pulling (table 4.26). The crude fibers created using this procedure were nonuniform, measured about 150 μm diam, and contained many nodules – a poor product compared with air cone output. Assuming the air/steam cone can be eliminated from basalt spinning operations, a step-by-step Unimate-automatable sequence is suggested in table 4.27.

As yet no research has been performed either on vacuum or lunar basalt fiber drawing. Molten basalt on the Moon has very low viscosity which may possibly be controlled, if necessary, by additives. At present it remains unknown whether mechanical spinning of raw lunar basalts is possible or if the vacuum environment will yield a thinner, more uniform product. Still, extrusion of viscous rock melts to produce spun products appears promising and as indicated in table 4.27 is likely amenable to automation in space-manufacturing applications.

(e) Shearing

Shearing is the mechanical cutting of sheet or plate materials using two straight cutting blades, without chip

TABLE 4.26.– AVERAGE TENSILE STRENGTHS OF BASALT FIBERS (10-50 SPECIMENS FOR EACH VALUE)

Temperature at bottom of bushing, K	Fiber size, μm	Tensile strength,	
		MPa	psi
1450	9-11	66	96,000
1510	9-10	134	196,000
	13-15	130	190,000
1525	7-9	143	209,000
	9-11	163	238,000
	13-16	145	212,000
1560	8-10	136	190,000
	11-13	128	187,000
	15-18	132	193,000
1600[a]	7.5	149	218,000

[a]Average of only five specimens.

TABLE 4.27.– OPERATIONAL SEQUENCE FOR AUTOMATED MANUFACTURE OF SPUN BASALT USING UNIMATE ROBOTICS TECHNOLOGY

Step	Procedure
1	Unimate sensors scan electric furnace temperature. Adjusts temperature for optimum viscosity.
2	Unimate introduces 100 kg of raw basalt into furnace through hopper feed gate.
3	Unimate raises furnace temperature to above liquidus with serial decrease to optimum temperature as melting proceeds.
4	Unimate causes discharge of set volume of melt into crucible resting on detent plugging mm-sized hole in crucible base.
5	Unimate sensors monitor crucible temperature fall-off until viscosity increase prevents leakage of charge.
6	Unimate positions crucible within induction coil above drum reel in raised position.
7	Unimate system activates induction furnace to lower viscosity of charge using programmed weight/temperature program to produce temperature (viscosity) plateau until first molten basalt droplet draining from crucible is grasped by clip on reel drum.
8	Unimate controller triggers drum release and turn operation begins, which results in the drawing of fiber.
9	Unimate sensors observe basalt fiber thread output using fiber optic techniques. Fiber diameter controls reel rate and furnace temperature. If no fiber is present, drum is raised and operation repeated.
10	Crucible weight-sensitive switch cuts off induction furnace as melt is consumed. Fiber breaks, filled reel drum is removed by Unimate and is replaced by an empty.
11	Reel drum is raised and empty crucible moved by Unimate onto detent below furnace. Procedure begins again.

formation, burning or melting (DeGarmo, 1979). If the shearing blades have curved edges like punches or dies the process is given another name (e.g., blanking, piercing, notching, shaving, trimming, dinking, and so on as noted in table 4.17.

Shearing already has been automated in many industries. For instance, the Chambersburg Engineering Company has incorporated a 2000B Unimate into a trimming operation performed on the output of an impact forging system. The robot moves 1400 K platters from the forge to hot trimmers, sensing, via hand tooling interlocks, that it has properly grasped the platter. An infrared detector checks parts for correct working temperatures, and the robot rejects all platters for which either grasp or temperature requirements are not met (Unimation, 1979).

Despite its tremendous utility on Earth, shearing appears less desirable than other options for space manufacturing because of the problems of cold welding and shearing tool wear. Also, ceramic and silicate forms cannot be processed by conventional shearing techniques. The most attractive alternative may be laser-beam cutting, piercing, punching, notching, and lancing. Yankee (1979) has reviewed laser-beam machining (LBM) generally, and additional data are provided in section 4.3.1. The application of LBM techniques to metals for shearing operations is an established technology, whereas laser beam cutting of basalt and basalt products is not well-documented.

4D.2 Deformation Criteria and Research Options for Space Manufacturing

In general, deformation processes that do not require gas or liquid drives but emphasize electrical or electromagnetic mechanical power sources appear more practical for space manufacturing applications. Processes yielding thin-walled or ribbon forms such as reversible rolling or electroforming appear favorable. The mass/production ratio argues against heavy forges and in favor of roller technology, an approach which also should improve the quality of output in high-vacuum manufacturing environments. Deformation processes involving forming or shearing typically consume little material (except for fluid-driven devices). On the Moon, the optimum near-term design philosophy is to develop automated systems powered exclusively by electric and magnetic forces.

In order to make tool products, versatile semiautomated machines are initially required for the terrestrial demonstration program. Tool life and machining time must be assessed in view of the extraterrestrial conditions anticipated. For example, Ostwald (1974) has reviewed these

parameters for cost estimation. The Taylor tool life equation is $VT^nF^m = k$, where V is linear tool velocity across the workpiece (m/sec), T is tool life (sec), n and m are dimensionless empirical exponents (logarithmic slopes), F is tool bit-feed rate or relative speed of workpiece and cutting surfaces (m/sec or m/rev), and k is a constant determined by laboratory evaluation of various cutting materials. Machining time t is given by $\pi LD/12VF$, where L is length of cut (m) and D is tool diameter (m). Unfortunately, the special production environment includes low- to zero-g which precludes all shaving- or chip-generating processes unless tools are placed under an oxygen-rich atmosphere.

Clearly, novel techniques must be considered in manufacturing designs intended for nonterrestrial applications. For instance, thread rolling offers a solution to fastener production, electroforming appears suitable for thin-walled containers, and noncentrifugal basalt casting may prove useful in low- or zero-g and yield a more homogeneous product. Vacuum enhances the characteristics of some metals, e.g., cold rolling increases the tensile strength of steel and improves the ductility of chromium. Electrostatic fields may enhance bubble coalescence in metallurgical or rock-melt products.

Many areas of research and development are required to generate appropriate deformation options for an SMF. In deformation processes where oxidized metal surface coatings must be broken (e.g., impact forging, stretching, deep drawing, and shearing), the minimum amount of oxygen necessary to prevent cold welding must be determined. Specific surface poisoning requirements must be measured for specific metals. Thermal environment is also of critical significance. Deformation at temperatures below about 230 K must take proper account of metal embrittlement. Fracture propagation in very cold steel is a serious problem on Earth. Rate processes in metal deformation may be significant in a lunar factory. If an enclosed, slightly oxygenated automated factory bay is provided (perhaps adjacent to the shirtsleeve environment of a manned facility) there appears to be no severe energy constraint in keeping the bay area above 230 K. Temperature control could be achieved by electrical heaters or unidirectional heat pipes for factories sited, say, at the lunar poles (Green, 1978).

Additional research opportunities include:

- Remote sensing of nonterrestrial ore deposits
- Mass launch of materials to processing plants
- Commonality of magnetic impulse forming components with those of mass-launch equipment
- Quality control of ores by intelligent robots
- Optimum spun/cast basalt mixtures
- Tool-life evaluations including sintered and cast basalts
- Powder metallurgy using induction heating or admixed micron-sized raw native iron in lunar "soil" (abundance about 0.5%)
- Factory control strategies
- Factory configuration studies.

Further experimentation also is needed with metal/rock test pairs to determine wear, abrasion, and hardness characteristics after deformation under high-vacuum, low-oxygen conditions. The U.S. Bureau of Mines has done some research on certain aspects of this problem at their centers in Albany, Denver, and Twin Cities. Test equipment, procedures and key personnel pertinent to space and lunar manufacturing options are named in table 4.28.

The role played by humans in space operations will vary with the machine for some deformation processes. Optimum proportions of human and robot activities in lunar factories will doubtless evolve over a period of time, with major manned support expected in early phases of SMF operation, and far less, once production becomes routine. Almost all forming or shearing procedures can be automated either in feed or transfer operations. Indeed, present-day Unimate-series robots have proven especially suitable in such applications in terrestrial industry.

TABLE 4.28.– METAL/ROCK TEST EQUIPMENT SUITABLE FOR LUNAR-FACTORY RESEARCH

FRICTION AND ABRASION WEAR
Erosive-wear testing facility Albany Metallurgy Research Center John E. Kelley, 420-5896 A 12-specimen erosion test apparatus built at AMRC uses an S.S. White Airbrasive model-H unit to propel 27 μm Al_2O_3 particles against specimens at temperatures up to 1,000°C in selected atmospheres and at selected impingement angles. Relative erosion is determined by comparing material loss of a target with that of a "standard" specimen.
Friction and rubbing-wear test facility Albany Metallurgy Research Center John E. Kelley, 420-5896 A Falex-6 friction and wear machine built by Faville-LeVally Corp. is used to measure abrasion wear, adhesive wear, and coefficient of friction of solid materials. Pin-on-disc and ring-on-ring tests can be made, wet or dry, with or without abrasive particles, in either cyclic or continuous rubbing modes, under variable and controllable conditions of speed, load, atmosphere, and temperature to 260°C (500°F).
Friction and wear Twin Cities Mining Research Center D. R. Tweeton, 725-3468 The Dow Corning Alpha LWF-1 friction- and wear-testing machine can measure sliding friction of metal/metal or metal/mineral test pairs in air or environmental fluid.
Impact-abrasion tester Albany Metallurgy Research Center John E. Kelley, 420-5896 An impact machine with variable speed and thrust is used to repeatedly impact test specimens tangentially against a rough material such as sandstone to determine the impact-abrasion wear rate.
Simulated-service ball-valve tester Albany Metallurgy Research Center John E. Kelley, 420-5896 Ball valves fitted with experimental parts such as balls and seats can be tested for wear by automatic cyclic operation. During each cycle a differential pressure up to 2100 Pa at 340°C (650°F) is applied, then relieved, across the valve, and abrasive solids are passed back and forth through the valve by operating the tester in the manner of an hourglass. Parts wear is monitored by recording the rate of gas leakage across, say, the ball and seat each time the differential pressure is applied. Damaged parts are removed and examined both macro- and microscopically.
HARDNESS AND SCRATCH ANALYSIS
Microhardness Twin Cities Mining Research Center George A. Savanick, 725-4543 The Zeiss microindentation hardness tester is capable of measuring the microhardness of selected microscopic areas on solid surfaces. A Knoop diamond is pressed into the solid and the diamond-shaped impresson thus formed is measured under high magnification (500-1,500 X) with a special eyepiece. The optical system is equipped with a Nomarski differential interference contrast capability which enhances image contrast.

TABLE 4.28.– CONCLUDED

HARDNESS AND SCRATCH ANALYSIS – CONCLUDED
Schmidt hardness Twin Cities Mining Research Center W. A. Olsson, R. E. Thill, 725-4580 Soil test Schmidt hardness hammer and Shore scleroscope hardness tester for determining the hardness properties of a material.
Scratch analysis Twin Cities Mining Research Center Robert J. Willard, 725-4573 Hilger and Watts fine-scratch microscope, model TM-52, for use in measuring widths and depth (in inches) of scratches on rock and mineral materials. Moderate experience in scratch measurements, can provide scratch analyses on a limited number of samples of any solid, translucent or opaque material.
Shore hardness Denver Mining Research Center R. Gerlick, 234-3765 Shore hardness tester to determine hardness of rock and other materials.
Rock drilling and cutting Core preparation Denver Mining Research Center H. C. Farley, E. B. Wimer, 234-3755 Trained staff and equipment available to take core from small samples and prepare it for testing, cutting, grinding, etc. Rock cutting and handling Twin Cities Mining Research Center R. L. Schmidt, 725-3455 Trained staff and equipment are available to conduct small- or large-scale experiments in the laboratory or field. Instrument drilling equipment includes a 2-boom jumbo with drifters, airleg drills, a diesel-powered diamond drill, and a truck-mounted rotary drill. Small- and large-scale linear rock-cutting apparatus are also available with thrust capabilities to 14 tons. The laboratory is equipped with service equipment for handling up to 7-ton rock blocks.

4D.3 References

DeGarmo, E. P.: Materials and Processes in Manufacturing. Macmillan, New York, 1979. Fifth Edition.

Green, J.: The Polar Lunar Base – A Viable Alternative to L-5. American Astronautical Society Conference, 30 October-2 November 1978. Paper No. AAS 78-191. 41 pp. (Advances in the Astronautical Sciences, vol. 38, pt. 1, pp. 385-425.)

Kopecky, L.; and Voldan, J.: The Cast Basalt Industry. Annals of the New York Academy of Science, vol. 123, article 2, July 15, 1965, pp. 1086-1105.

MacKenzie, J. D.; and Claridge, R. C.: Glass and Ceramics from Lunar Materials. In Space Manufacturing III, Proceedings of the 4th Princeton/AIAA Conference, J. Grey and C. Krop, eds., 14-17 May 1979, Paper No. 79-1381.

Miller, Rene H.; and Smith, David, B. S.: Extraterrestrial Processing and Manufacturing of Large Space Systems. NASA CR-161293, vol. 1-3, 1979.

Ostwald, Phillip F.: Cost Estimating for Engineering and Management. Prentice-Hall, Englewood Cliffs, New Jersey, 1974.

Subramanian, R. V.; Austin, H. F.; Raff, R. A. V.; Sheldon, G.; Dailey, R. T.; and Wullenwaber, D.: Use of Basalt Rock for the Production of Mineral Fiber, Pacific Northwest Commission Annual Report, Contract NR-3001, College of Engineering, Washington State University, Pullman, Washington, June 1975. 79 pp.

Subramanian, R. V.; and Kuang-Huah, Shu: Interfacial Bonding in Basalt Fiber-Polymer Composites. 34th Annual Technical Conference, Reinforced Plastics/Composites Institute, Section 17C, New Orleans, La., Jan. 1979, pp. 1-10.

Unimation, Inc.: Unimation Application Notes, Industrial Robots: Volume 2 – Applications, Tanner, W. R., ed., Society of Manufacturing Engineers, Dearborn, Michigan, 1979, pp. 93-95.

Yankee, Herbert W.: Manufacturing Processes. Prentice-Hall, Englewood Cliffs, New Jersey, 1979. 765 pp.

APPENDIX 4E

REVIEW OF WELDING, BRAZING, AND SOLDERING TECHNIQUES

Joining techniques involving elevated temperatures and materials fusion include welding, brazing, and soldering. Welding is a process leading to the permanent joining of materials (usually metals) through a suitable combination of temperature and pressure (DeGarmo, 1979). Approximately 40 different welding techniques have been utilized in terrestrial situations (Lindberg, 1977). Brazing and soldering require the use of a molten filler to join metal workpieces. The workpieces themselves are not melted; rather, capillary action facilitates the joining process. Brazing occurs when filler material reaches a melting temperature above 723 K (840°F); soldering uses fillers with melting points below 723 K (DeGarmo, 1979; Schey, 1977).

Within the three basic classes there are numerous joining alternatives for space manufacturing operations. Analysis is greatly simplified by reducing the 61 welding, brazing, and soldering techniques identified in table 4.17 to the following six major categories: electric arc welding, oxyfuel gas welding (i.e., gas-oxygen flame welding), resistance welding, solid-state welding, electronic welding, and brazing/soldering. While some overlap is inevitable, this approach appears effective in providing first-order discrimination between immediately useful and less-feasible joining technologies appropriate for SMF deployment.

4E.1 Metals Joining Analysis

To determine the suitability of various joining processes for space and lunar manufacturing applications, selection criteria for SMF options (table 4.18) were applied to each major terrestrial welding, brazing, and soldering technique. These criteria include usefulness in the production of other manufacturing equipment; production rates and required consumables; energy of production; preparatory steps leading to the manufacture of the process itself or products it can help build; mandatory environmental characteristics to enable processing to proceed; feasibility of automation/teleoperation and people roles required (if necessary); further R&D needed to develop promising alternatives; and a qualitative mass-multiplication ratio or "Tukey Ratio" (see chapter 5), an indication of the extent to which nonterrestrial (i.e., lunar) materials can be utilized as opposed to costly up-shipment of feedstock from Earth (Heer, 1980, unpublished draft notes of the Proceedings of the Pajaro Dunes Goal-Setting Workshop, June 1980.)

4E.1.1 Electric arc welding

Electric-arc-welding techniques include shielded or unshielded metal, gas metal (pulsed, short circuit, electrogas, spray transfer), gas tungsten, flux-cored, submerged, plasma arc, carbon arc, stud, electroslag, atomic hydrogen, plasma-MIG, and impregnated tape welding. The SMF suitability assessment is as follows:

- Make other equipment – A basic joining process is needed.
- Production rates – Houldcroft (1977) gives a figure of 3-140 mm^2/sec and estimates a metal deposition rate of 1-12 kg/hr. Schwartz (1977) cites a 27 kg/hr figure for plasma arc plus hot-wire welding.
- Required consumables – Varies widely according to technique used. Electrodes, flux, wire, and gas (especially argon and helium, often in combination with H_2, CO_2, or O_2) are all used in electric arc welding. Some techniques require only one of these four consumables; many use two. Stud welding demands special collars or ferrules, and 1-2 kg/m of metal also is needed (Houldcroft, 1977). Productivity varies with welding speed, current amplitude, and plate thickness.
- Production energy – Required voltage ranges from 10-70 V, current from 2-2000 A (Schey, 1977; Schwartz, 1979). Romans and Simons (1968) give a maximum value of 10,000 A for electroslag welding. A particularly useful quick survey of various electric arc techniques may be found in Lindberg (1977).
- Preparation steps – A variety of hoses, valves, wire, switches, a power supply and gun are needed to make a welding unit. The amount of preparation required may be extensive in some cases (e.g., securing and aligning pieces, plates to contain slag, etc.). Other techniques require relatively little preparation.
- Production environment – A pressurized welding environment is needed to use flux or slag processes.
- Automation/teleoperation potential – Many of these techniques are already automated in terrestrial applications.
- People roles – Other than design, none required.

- R&D required – Not a promising future line of inquiry.
- Qualitative Tukey Ratio – Moderately poor. Some of the consumables, especially gases, are comparatively difficult to obtain in quantity from lunar soil.

4E.1.2 Oxyfuel welding

Included among the oxyfuel gas-welding techniques are oxyacetylene, methylacetylene propadiene (MAPP), air-acetylene, oxyhydrogen, and pressure gas. The SMF suitability assessment produced the following results:

- Make other equipment – Need a basic joining process.
- Production rates – Estimates include 0.6 to 10 m/hr (2 to 30 ft/hr) (Romans and Simons, 1968), 1.6 to 5.4 mm^2/sec (Houldcroft, 1977), and 0.3 to 0.6 kg/hr (Schey, 1977).
- Required consumables – Main consumables are gases, especially acetylene and oxygen. Filler rods and flux may or may not be required (Houldcroft, 1977).
- Production energy – Romans and Simons (1968) claim that vertical welding at a rate of 2-5 m/hr requires 70-500 liters/hr of acetylene gas at STP.
- Preparation steps – Need gases in pressure tanks, a simple valve/regulator structure, gauges, hoses, torch and torch tip assemblies (Griffen et al., 1978). Surface preparation of workpieces requires a basic cleaning process. Jigs typically are used to hold the workpiece in the proper positions.
- Production environment – Gases necessitate a pressurized environment.
- Automation/teleoperation potential – Already automated in many terrestrial manufacturing applications (Phillips, 1963; Yankee, 1979).
- People roles – Could conceivably be used by astronauts to perform quick, portable repair welding operations in a pressurized environment.
- R&D required – Not a promising future line of inquiry.
- Qualitative Tukey Ratio – Very poor in the near-term due to heavy dependence on gases comprised of chemical elements having low lunar abundances (e.g., acetylene, MAPP, hydrogen).

4E.1.3 Resistance welding

Resistance techniques include spot, projection, seam, flash butt, upset, and percussion welding. (High-frequency resistance welding is discussed as an electronic welding technology.) The assessment follows:

- Make other equipment – Basic joining process is needed.
- Production rates – Ranges from 16 to 107 mm^2/sec are given by Houldcroft (1977) for resistance welding generally, and Romans and Simons (1968) estimate 1 to 4 m/min (36 to 144 in./min) for seam welding.
- Required consumables – Air (gas) or water are necessary to provide high pressures, and water is needed for cooling. Substitutes can probably be found among available nonterrestrial materials.
- Production energy – Considerable electrical energy is required, typically 1000 to 100,000 A at 2 to 20 V (Moore and Kibbey, 1965; Romans and Simons, 1968). Romans and Simons give a range of 1 to 140 W/hr per spot weld.
- Preparation steps – Modest resistance welding machines require very large power supplies. Pressure-producing cylinders for larger equipment are somewhat complex, and sophisticated timing devices are necessary. However, little preparation of materials is needed, perhaps the key reason why resistance welding is so popular on Earth (Moore and Kibbey, 1965).
- Production environment – Moore and Kibbey (1965) indicate that air must be supplied for operation of the electrodes, so a pressurized environment may be necessary.
- Automation/teleoperation potential – These techniques have already been largely automated on Earth.
- People roles – None required other than design.
- R&D required – Not a promising future line of inquiry.
- Qualitative Tukey Ratio – Moore and Kibbey (1965) note that resistance welding electrodes are subjected to 10,800 A/cm^2 at 410 MN/m^2 (70,000 A/$in.^2$ at 60,000 psi). It seems unlikely that lunar-abundant aluminum could even come close to replacing copper-bronze and copper-tungsten alloys used to make electrodes on Earth. Also, it is questionable whether aluminum could be incorporated in the massive high-current power transformers required. The Tukey Ratio appears quite poor in this case.

4E.1.4 Solid-state welding

Included within this category are ultrasonic, explosive, diffusion, friction, inertia, forge, vacuum (cold), and roll welding. The SMF assessment is as follows:

- Make other equipment – Need a basic joining process.
- Production rates – On thin materials, roller-seam ultrasonic welds can be produced at rates up to 10 m/min.

- Required consumables – Air, water, or other pressure-producing agents are needed for cold, friction, and roll welding. Explosion welding uses explosive sheets with TNT, ammonium nitrate, amatol, and others. Ultrasonic welding requires a transmission medium for sound waves.
- Production energy – Vacuum (cold) welding requires only a very light pressure. Ultrasonic welders are rated at up to 25 kW (Schwartz, 1979).
- Preparation steps – Materials to be cold welded under vacuum need only be appropriately positioned for application of modest pressure, though the exact preparation steps for a vacuum welding machine are unknown. Explosion welding involves placing an explosive sheet on the workpieces. Friction and inertia welding require a driving system, hydraulic cylinder, bearing, bearing enclosure, etc. Ultrasonic welding utilizes a rigid anvil, a welding tip consisting of a piezoelectric crystal and a transducer with horn, and a force-application mechanism. Parts alignment is a crucial step in all joining processes.
- Automation/teleoperation potential – Most, if not all, of these techniques should readily be automatable.
- People roles – None, other than original design.
- R&D required – Cold welding has the highest appeal as a simple joining process. A system of applying small pressures without accidentally contact welding the machine to the workpiece must be devised. One simple method is a vise made of insulated metal parts (teflon- or oxide-coated). More must be learned about cold-welding properties of various materials.
- Qualitative Tukey Ratio – Seems likely to be extremely good for cold welding. Closely related forms such as friction, inertia and roll welding should also exhibit satisfactory Tukey Ratios, since only small pressures need be applied. Forge and diffusion welding require heat as well (and hence, seem superfluous), but can probably exhibit favorable ratios with some modification. The ratio for ultrasonic welding appears relatively poor.

4E.1.5 Electronic welding

Electronic welding methods encompass the various forms of electron-beam, laser, induction, and high-frequency resistance welding. The following is the SMF suitability assessment:

- Make other equipment – A basic joining process is needed. (Note: A number of these techniques, particularly the laser, can be used for many other options.)
- Production rates – Lindberg (1977) cites a figure of 16 m/hr (50 ft/hr) for a high-power continuous-wave solid-state laser. The estimate by Schwartz (1979) is much higher: 50 to 80 m/hr (150 to 250 ft/hr). Electron-beam welders can produce up to 1800 small parts per hour in a partial vacuum (Schwartz, 1979) or up to 200 mm^2/sec of welding (Houldcroft, 1977). Induction welding production rates are given as 6.5 m/min (20 ft/min) of 20 cm (8 in.) pipe (Phillips, 1963) and 3.1 m/min (122 in./min) of tube welding for typical machines (Lindberg, 1977). High-frequency resistance methods can weld seams at 50 m/min (150 ft/min) with 60% efficiency (Schwartz, 1979).
- Required consumables – Flashlamps for solid-state lasers have a lifetime of 10^4 to 10^5 shots. Gas lasers may use a variety of gases including $CO_2/H_2/N_2$, argon, krypton, neon, xenon, and others. Electron-beam filaments last 2 to 1000 hr depending on filament type. High-frequency resistance welding contacts are good for roughly 6,000 to 130,000 m (50,000 to 400,000 ft) of welding before they must be replaced (Schwartz, 1979).
- Production energy – Lasers require up to 15 to 20 kW (Lindberg, 1977; Schwartz, 1979). Schwartz notes that gas lasers are inefficient (less than 0.1%) relative to solid-state lasers (up to 10% efficiency). Electron-beam welders draw 6 to 75 kW, with voltages in the 15 to 200 kV range. The American Welding Society (Phillips, 1963) estimates 1 to 600 kW output power for induction welding – as much as 1 MW may be needed in some cases. Energy requirements for high-frequency resistance welding are much lower than other resistance techniques due to increased resistivity at higher (400 kHz) frequencies (Lindberg, 1977; Schwartz, 1979). Schwartz claims that the most powerful high-frequency resistance welding machines in terrestrial use draw 150 kW, though many require only 1 to 50 kW.
- Preparation steps – A solid-state laser is comprised of a rod, laser cavity, precision-ground mirrors, flashlamp, cooling system, focusing optics, and power supply. In recent years ruby rods have been increasingly replaced by Nd:YAG rods (Schwartz, 1979). Flashlamps usually are xenon- or krypton-filled (Lindberg, 1977). Gas lasers do not need rods and flashlamps of such exotic composition, but instead require gas and a heat exchanger. Electron-beam welders need a sophisticated variant of the cathode-ray tube, a very high voltage power supply, and preferably a vacuum environment. Induction welding units are characterized by a large coil at low frequencies, a high-power oscillator circuit at high frequen-

cies, and a heavy-duty power supply and cooling system. High-frequency resistance welding differs from induction joining only in that its contacts are supplied at relatively low loads. Finally, workpieces require alignment. Electron-beam and laser techniques typically are reserved for small, shallower welds demanding very precise alignment. Induction welding usually is in conjunction with a pressure-producing machine.

- Production environment – Electron-beam welders work best in a vacuum. Gas lasers require an enclosed chamber to contain the gas. Otherwise electronic welding techniques appear fairly adaptable.
- Automation/teleoperation potential – Lindberg (1977) notes that both E-beam and laser welding techniques are easy to automate. Induction welding also has been automated to a considerable extent in terrestrial manufacturing.
- People roles – None required beyond the design phase.
- R&D required – Further developments in electron-beam and laser technologies are likely to be highly fruitful. Laser flashlamp lifetimes must be greatly increased.
- Qualitative Tukey Ratio – The Ratio is somewhat poor for solid-state lasers using present-day technologies, though the components are not too massive and so could be lifted from Earth with only modest penalty. With some possible substitutions the Ratios for other electronic welding options appear favorable. Some essential materials may be difficult to obtain in sufficiently large quantities (such as the carbon for CO_2 or inert gases in a gas laser).

4E.1.6 Brazing and soldering

Among the various brazing processes identified in this study are torch, induction, furnace, dip, resistance, infrared, and especially vacuum methods. Soldering includes iron, resistance, hot plate, oven, induction, dip, wave, and ultrasonic techniques. The space manufacturing suitability assessment follows:

- Make other equipment – Since brazing and soldering make weaker bonds than welding they are somewhat less universal in common use. On the other hand, some very dissimilar materials can be brazed but not welded.
- Production rates – No figures were given in any of the references reviewed. Wave soldering allows the processing of entire circuit boards (hundreds of components) in a few seconds.
- Required consumables – Filler metals or alloys and fluxes usually are required, though some processes are fluxless.
- Production energy – Highly variable. (See oxy-fuel gas welding for estimates on one common method.) The major difference between these techniques and welding with respect to production energy is that less heat is required.
- Preparation steps – Alignment jigs are needed to position workpieces to a fairly high degree of accuracy. Flux and heat are applied first, followed by filler material. Some fluxes and fillers are combined. Vacuum brazing requires filler only.
- Production environment – A pressurized environment is mandatory except for vacuum and fluxless brazing.
- Automation/teleoperation potential – These processes are not extremely complex. Furnace brazing and wave soldering are contemporary examples of automated or semiautomated systems.
- People roles – None except for design.
- R&D required – Fluxless brazing (e.g., of aluminum) and vacuum brazing appear fruitful research avenues worthy of further exploration.
- Qualitative Tukey Ratio – The Ratio is poor in most cases. The most commonly used brazing metals (fillers) are copper and copper/silver/aluminum alloys; solders typically are tin/lead mixtures. Most flux materials are not readily available from nonterrestrial sources. However, the Tukey Ratios for vacuum and fluxless brazing of aluminum, titanium, and a few other metals seem rather promising.

4E.2 Summary of Metal-Joining Options in Space Manufacturing

Perhaps the most significant conclusion to be drawn from the preceding analysis is that NASA is on the right track in its research and development efforts on space-qualifiable joining processes. Most promising are vacuum or cold-pressure welding in the solid-state category, the various electronic welding techniques (E-beam, laser, induction, and high-frequency resistance welding), and vacuum and fluxless brazing. NASA has already done some research on electron-beam and laser welding (including successful experiments in space) and vacuum brazing. Explosion welding may be useful if an explosive can be developed from lunar materials and the shock wave made to propagate in a vacuum environment. Friction welding might usefully be combined with vacuum welding (at lower pressures than required on Earth) to quickly remove protective coatings which inhibit undesired contact welding.

Of the most promising techniques, vacuum welding and vacuum brazing seem the simplest, the least energy-consuming, and exhibit the best Tukey Ratios. Vacuum brazing requires some heat to melt filler material, but probably bonds a greater variety of materials (e.g., refractory and reactive bare metals, ceramics, graphite, and composites) than vacuum welding methods. Electronic techniques offer poorer mass multiplication ratios, especially in the case of the laser. However, both E-beams and laser beams are extremely versatile – besides welding a very wide variety of materials, lasers can drill, cut, vapor deposit, heat treat, and alloy (Schwartz, 1979). They can cast and machine as well as weld, making them excellent candidates for the initial elements of a space manufacturing bootstrap operation. High-frequency resistance and induction welding can also join a wide variety of materials, and with high efficiency. Table 4.29 compares key characteristics of laser and electron-beam processes with those of two less-promising alternatives for space and lunar applications. It is apparent that both E-beam and laser techniques are competitive in most categories whether on Earth or in space. Equipment cost of the E-beam should be much lower in a vacuum environment, since the major expense in terrestrial applications is for the maintenance of proper vacuum.

Figure 4.29 provides a useful overview of welding capabilities for various material thicknesses. While this factor has not yet been discussed it is nonetheless important, since production speed diminishes nonlinearly with penetration depth. It is interesting to note that the combination of laser and E-beam technologies spans the entire range of usual material thicknesses. No direct data were available on the vacuum-welding technique, but this range conceivably could be quite large.

From the standpoint of automation in space, a final and most significant conclusion is that all joining processes of interest appear readily automatable. Joining should pose no insurmountable problems for space or lunar manufacturing facilities. General-purpose repair welding must probably be accomplished initially via teleoperation, as this activity requires a much higher degree of intelligence and adaptability.

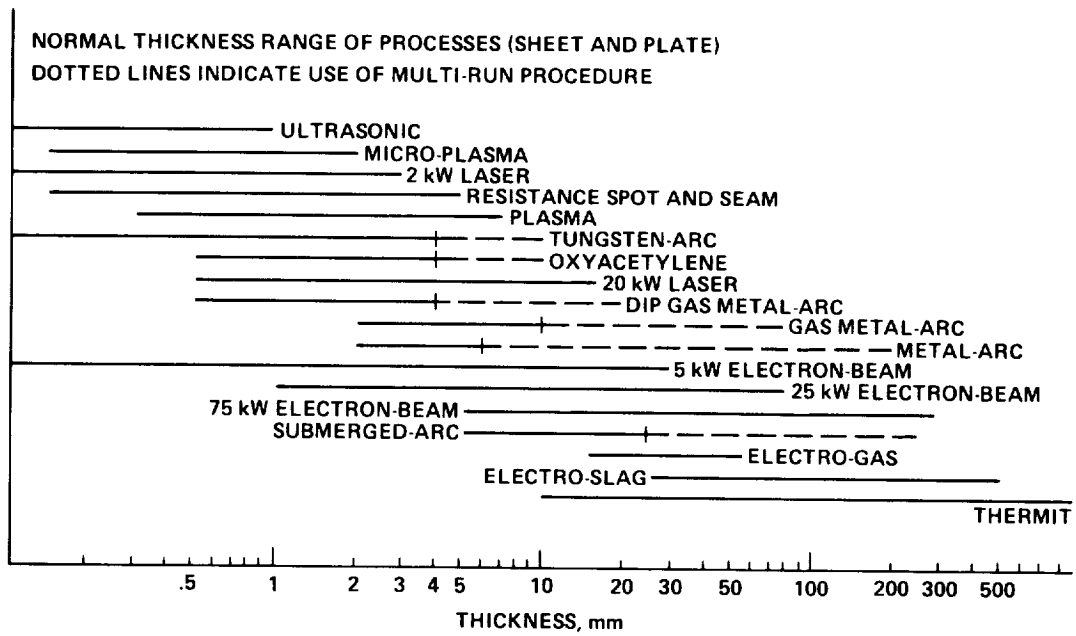

Herbert W. Yankee, MANUFACTURING PROCESSES, ©1979, pp. 349, 528, 533. Reprinted by permission of Prentice-Hall, Inc., Englewood Cliffs, N.J.

Figure 4.29.– Thickness range of welding processes.

TABLE 4.29.– SIMPLIFIED QUALITATIVE COMPARISONS BETWEEN LASERS, E-BEAMS, AND TWO COMMON FORMS OF RESISTANCE AND ARC WELDING

Characteristic	Laser	E-beam	Resistance (spot)	Electric arc (gas tungsten)
Heat generation	Low	Moderate	Moderate-high	Very high
Weld quality	Excellent	Excellent	Good	Excellent
Weld speed	Moderate	High	Moderate	High
Initial costs	Moderate	High	Low	Low
Operating/maintenance costs	Low	Moderate	Low	Low
Tooling costs	Low	High	High	Moderate
Controllability	Very good	Good	Low	Fair
Ease of automation	Excellent	Good	Fair	Fair
Range of dissimilar materials which can be welded	Very wide	Wide	Narrow	Narrow

4E.3 References

DeGarmo, E. P.: Materials and Processes in Manufacturing. Macmillan, New York, 1979. Fifth Edition.

Griffin, I. H.; Roden, E. M.; and Briggs, C. W.: Welding Processes, Van Nostrand Reinhold Company, New York, 1978. Second edition.

Houldcroft, P. T.: Welding Process Technology. Cambridge University Press, Cambridge, England, 1977.

Lindberg, R. A.: Processes and Materials of Manufacture. Allyn and Bacon, Boston, 1977. Second Edition. 714 pp.

Moore, H. D.; and Kibbey, D. R.: Manufacturing Materials and Processes, Irwin, Homewood, Illinois, 1965.

Phillips, A. L., ed.: Welding Handbook: Welding Processes – Gas, Arc and Resistance. American Welding Society, New York, 1963. Fifth Edition.

Romans, D.; and Simons, E. N.: Welding Processes and Technology. Pitman and Sons, London, England, 1968.

Schey, J. A.: Introduction to Manufacturing Processes. McGraw-Hill, San Francisco, 1977.

Schwartz, M. M.: Metals Joining Manual. McGraw-Hill Book Co., San Francisco, 1979.

Yankee, H. W.: Manufacturing Processes. Prentice-Hall, Englewood Cliffs, New Jersey, 1979. 765 pp.

APPENDIX 4F

REVIEW OF ADHESIVES, FASTENERS, AND FITTING

There exist a number of alternatives to welding, brazing, and soldering which might be employed in space industry for joining metals and especially nonmetals. The most important of these are adhesives, metals fasteners, interlace fasteners for stitching or stapling, shrink fitting, and press fitting. Each has been considered for space applications in terms of manufacturing processes, required materials, possible compatible substitute techniques, and the degree of automation attainable. In addition, the unique impact of zero-g (more properly, "free-fall"), hard vacuum, and intense radiation is considered for each joining process examined.

4F.1 Glues and Other Nonmetallic Bonding Agents

Adhesives are used to fasten two surfaces together, usually producing a smooth bond. This joining technique involves glues, epoxies, or various plastic agents that bond by evaporation of a solvent or by curing a bonding agent with heat, pressure, or time. Historically, glues have produced relatively weak bonds. However, the recent use of plastic-based agents such as the new "super-glues" that self-cure with heat has allowed adhesion with a strength approaching that of the bonded materials themselves. As a result, gluing has replaced other joining methods in many applications – especially where the bond is not exposed to prolonged heat or weathering.

A large fraction of modern glues are carbon-based petrochemical derivatives. These can be used to bond almost any combination of surfaces, either by direct contact or by fastening both surfaces to a third as with adhesive tapes. Glues can serve as bonding agents in strong structural materials – one of the earliest, and still common, such use is the fabrication of plywood (a wood composite). Other related composites include fiberglass and various fiber-epoxies such as boron-epoxy and carbon-epoxy. Many of these materials make superior stress-bearing components.

Composite structures often are far less massive than comparable metal components and may be used in structural locations. Some of the early plans for beam construction on Shuttle flights call for carbon-epoxy materials. Composites may be the major use of glue/epoxy adhesives in space. For macroscopic bonding, alternatives such as welding, stapling, bradding, stitching, and other fasteners can replace adhesives if necessary. But although composites in theory can be replaced by metal parts it is far more likely that in space metal parts will give way to composites.

The space application of adhesives includes the following considerations:

- Zero-g – Although some adhesives must bond and cure under pressure, variations on clamping could compensate for the lack of gravity. Application of adhesives also should not demand gravity feed, although squirting and injection techniques have been perfected.

- Vacuum – Many resins and glues used on Earth are fairly volatile and deteriorate under vacuum. But some plastics, once cured, no longer are volatile and may continue to be used in vacuo. Silicate-based waxes and bonding epoxies employed in composites are just two examples of currently available vacuum-compatible adhesives.

- Radiation – Most hydrocarbon-based plastics weaken under the influence of infrared and higher-frequency electromagnetic radiation. These would not be suitable for exposed space use without shielding. More research is needed to develop radiation-resistant adhesives and bonding agents.

The application of glues to complex shapes already is automated in many industries, particularly fabric applications. Composite mixing and curing is now done by machines with a high level of reliability. Further automation of these processes should present no unusual difficulties.

4F.2 Metal Fasteners

Metal fasteners are of two kinds – those producing a permanent bond and those requiring either a releasable or a sliding bond. Screws, nuts and bolts, rivets, brads, retaining rings and clamps are examples from the first category. These are used for permanent fastening where stress loads preclude gluing but do not require welding or where the possibility exists of undoing the bond for some future purpose such as repair. Nonpermanent fasteners include quick-release couplers and clamps intended for removal at a specified time, and pins which allow relative movement of fastened parts. Pins are used where conditions of movement

C-3

are less rigidly constrained than when heavy bearing capability is required.

Metal fasteners must be strong to bear significant loads. In many cases they can be manufactured by powder metallurgical or casting techniques. Iron is a constituent of many types of metal fasteners, although titanium increasingly is coming into use in applications where strength must be balanced against light weight. In most applications where permanent bonding is required metal fasteners are replaceable by some form of welding or soldering. A major consideration here is whether the fabrication of welding rods and the process of welding is a more or less efficient use of available resources and energy than the fabrication and use of fasteners. For nonpermanent bonds there is not much choice except friction/pressure fittings and these run the risk of vacuum welding.

Both iron and titanium are in abundance on the Moon and each has received much attention as two extraterrestrial resources most likely to be investigated early for extraction and utilization. The manufacture of metal rivets from lunar or simulated lunar resources would be a worthwhile early materials processing experiment for an orbital laboratory. Space applications considerations include:

- Zero-g – Metal fasteners may be lighter in weight because loads may be far less than on the ground.
- Vacuum – Permanent bonds are largely unaffected by vacuum. Vacuum welding will promote tighter joining, a benefit in the case of permanent bonds but a definite hindrance if breakable or sliding bonds are desired. Very low vapor-pressure lubricants (e.g., graphite), surface poisoners, or careful choice of incompatible metals may help to eliminate this problem.
- Radiation – Some metal fastener materials may become more brittle with time in the presence of ionizing radiation.

The fastening of rivets and bolts already has been automated in some terrestrial applications. Extending the techniques of automation to space, and including screws and nuts, clamps and pins, seems to present no special problems.

4F.3 Interlace Fasteners – Stitching

Interlace fastener stitching is a joining process by which pieces of material are interwoven through holes in the parts to be joined. The bond is primarily frictional if the joined pieces are not rigid, primarily tensional if they are rigid. On Earth, mostly fabrics are stitched, though items such as tennis racquets and sieves also require a type of stitching in their manufacture. Stitching material usually has physical properties and adhesive characteristics similar to those of the materials joined. Parts to be fastened must have a series of holes through which the interlace passes. These holes may be native to the material, as in a fabric, or specially drilled, as in wood or metal sheets. (Terrestrial stitching is applied to some processes not immediately obvious, such as the knitting together of thin plywood sheets to form a mold for fiberglass.) The primary space-related utility of interlace fasteners is expected to be in the manufacture of EVA pressure suits. Designs such as the Space Activity Suit (Annis and Webb, 1971) rely on tension instead of atmospheric pressure to counterbalance internal hydrostatic forces using corset-like interlaces to join special fabrics. Stitching materials may be organic or synthetic fibers, glass fibers, or even metals.

The space environment places a few constraints on possible stitching materials, as discussed below:

- Zero-g – Except for holding parts in place during fastening, zero-g presents no special hardships as regards stitching. Indeed, one possible indirect advantage is apparent: The lack of gravity permits finer threads to be pulled from molten material than is possible on Earth, because of the absence of both the catenary effect and the necessity to support threads against their own weight in zero-g.
- Vacuum – Vacuum poses two problems for stitching. First, it is nearly impossible to make an airtight interlace without sealant. Second, most interlace materials are hydrocarbon-based, hence are volatile and easily deteriorate in a vacuum. Fortunately, nonvolatile stitches made of metals or basalt glasses can be found, and there do exist sealants effective in closing small holes against the loss of atmosphere.
- Radiation – The deterioration of interlacing materials caused by hard radiation is a serious problem for hydrocarbon-based stitches, but replacement of these by glass or metal substitutes may eliminate the problem. Radiation-proof coatings should be vigorously pursued as an important topic in space manufacturing research.

The availability of stitching materials is strongly constrained. Hard vacuum and radiation in space render hydrocarbon-based threads infeasible due to volatility and molecular deterioration, and hydrocarbons are also relatively rare in near-lunar space. On the other hand, glass and metal interlaces do not suffer from these problems and are easily accessible on the Moon.

Stitching most efficiently must be done by machines in most applications, and these processes are already largely perfected. Interlacing beam ends do not seem to present any special problems for automation. As for alternatives, gluing can replace stitching in some applications such as the joining of fabrics. Gluing has the advantage of airtightness but the common disadvantage of lesser strength. Tack welding can replace interlacing of metals in many jobs, but a penalty must be paid in higher energy consumption.

4F.4 Interlace Fasteners – Stapling

Stapling is similar to stitching except that staple rigidity is important to the load. The staple passes through holes in the material to be fastened and is bent to prevent loaded matter from easily slipping out. Staples almost invariably are made of metal since they must be strong, cheap, and bendable yet fairly rigid. The relative ease and speed of stapling over stitching has led to its increasing use in the fabrics industry, though few large commercial products have direct space applications. Since staples provide a low-cost, low-energy, rapid-fastening capability, they may play a role in various forms of space construction. Beams of thin aluminum or other metals could be stapled rather than welded if desired. Staple bonds are relatively weak but zero-g permits their use in space on flimsy structural members impossible in terrestrial construction.

Stapling is usually done by machine on Earth and this is unlikely to change in space. As for alternatives, if bonded items are metallic, tack welding often can replace stapling. Energy costs increase with bond strength and tear resistance. If bonded items are nonmetallic then welding methods cannot be used, but glues may replace staples if necessary.

4F.5 Shrink and Press Fitting

Shrink fitting is accomplished by heating a part so that a hole in it expands, after which another piece may be fitted, usually under pressure, into that hole. The outer piece then contracts as it cools, creating a tight seal. Some sinter-like bonds may form, but shrink fitting works primarily by friction bonding. It requires thermal energy which press fitting (see below) does not, but less force is needed to achieve the final bond. If the material to be shrink-fitted is metallic, heating may be accomplished by induction.

Press fitting is similar to shrink fitting except that parts are not heated and higher pressures are necessary. Press fitting requires less energy but the bond is weaker. Also, if bonded material has a buckling problem press fitting is not suitable as a joining technique.

Beams made of rigid materials can be joined by fitting, as can many other parts. Gears routinely are attached to shafts by this method. Fitting can produce bonds strong enough for many applications. The great simplicity of these processes strongly urges their automation.

Usually metals are shrink and press fitted, and these materials are relatively abundant in nonterrestrial resources. The energy and materials efficiencies of these techniques make them prime candidates for space applications. Both are preferred to welding where loads are light. Vacuum welding may serve to strengthen bonds. Flames are hard to produce in a vacuum so shrink fitting probably will be accomplished by induction heating if the materials are metallic.

4F.6 References

Annis, James F.; and Webb, P.: Development of a Space Activity Suit. NASA CR-1892, November 1971.