CR-172069

FINAL REPORT

ON

CONTRACT NAS 9-17249

DEVELOPMENT AND VERIFICATION

OF

NASA STANDARD INITIATOR - 2

(NSI-2)

(NASA-CR-172069) DEVELOPMENT AND VERIFICATION OF NASA STANDARD INITIATOR-2 (NSI-2) Final Report (Roberts Research Lab.) 51 p CSCL 19A

N88-29044

Unclas

G3/28 0154962

PREPARED BY Linda Corbin-Roberts DATE 6/15/88

APPROVED BY A.R. Roberts DATE 6/15/88

ROBERTS RESEARCH LABORATORY

TABLE OF CONTENTS

INTRODUCTION

The purpose of this report is to summarize the results of verification testing on NASA Contract NAS 9-17249. This report contains brief discussion of design elements, actual test results, and a discussion of the results of the various tests.

The contract was awarded for development and demonstration of design modifications to the NASA Standard Initiator-1 (NSI-1); the result of the tasks is NASA Standard Initiator-2 (NSI-2).

In accordance with the requirements of Statement of Work Paragraph 1.0, the intent of the project was to develop and prove the following design features.

1) Protection from premature initiation due to electrostatic potential by means other than a spark gap.

2) Development of an integral insulated charge cup for use with a zirconium/potassium perchlorate type mixture.

3) Improved cost and reliability figures by the use of a deposited bridge.

4) Elimination of dudding as a result of the pyrotechnic shock effect, the movement of the primer composition away from the bridge circuit.

SOLUTIONS TO DESIGN PROBLEMS

The following is a brief discussion of our solutions to the chief design challenges of NSI-2 development and verification. Relevant drawings are attached.

Roberts Research Laboratory used integrated solutions to solve the challenges of NSI-2 development in an attempt to reduce costs and maximize the reliability of the initiator.

To eliminate premature firing from high voltage electrostatic discharge, our integral insulated charge cup is a metallic component connected by a low resistance bridge circuit to the pins. It is insulated from the main initiator body by a concentric glass-to-metal seal, which provides insulating resistance characteristics far in excess of the requirements of the Statement of Work. For all practical purposes, the pins and the charge cup are at the same electrical potential with respect to electrostatic discharge. With this design,

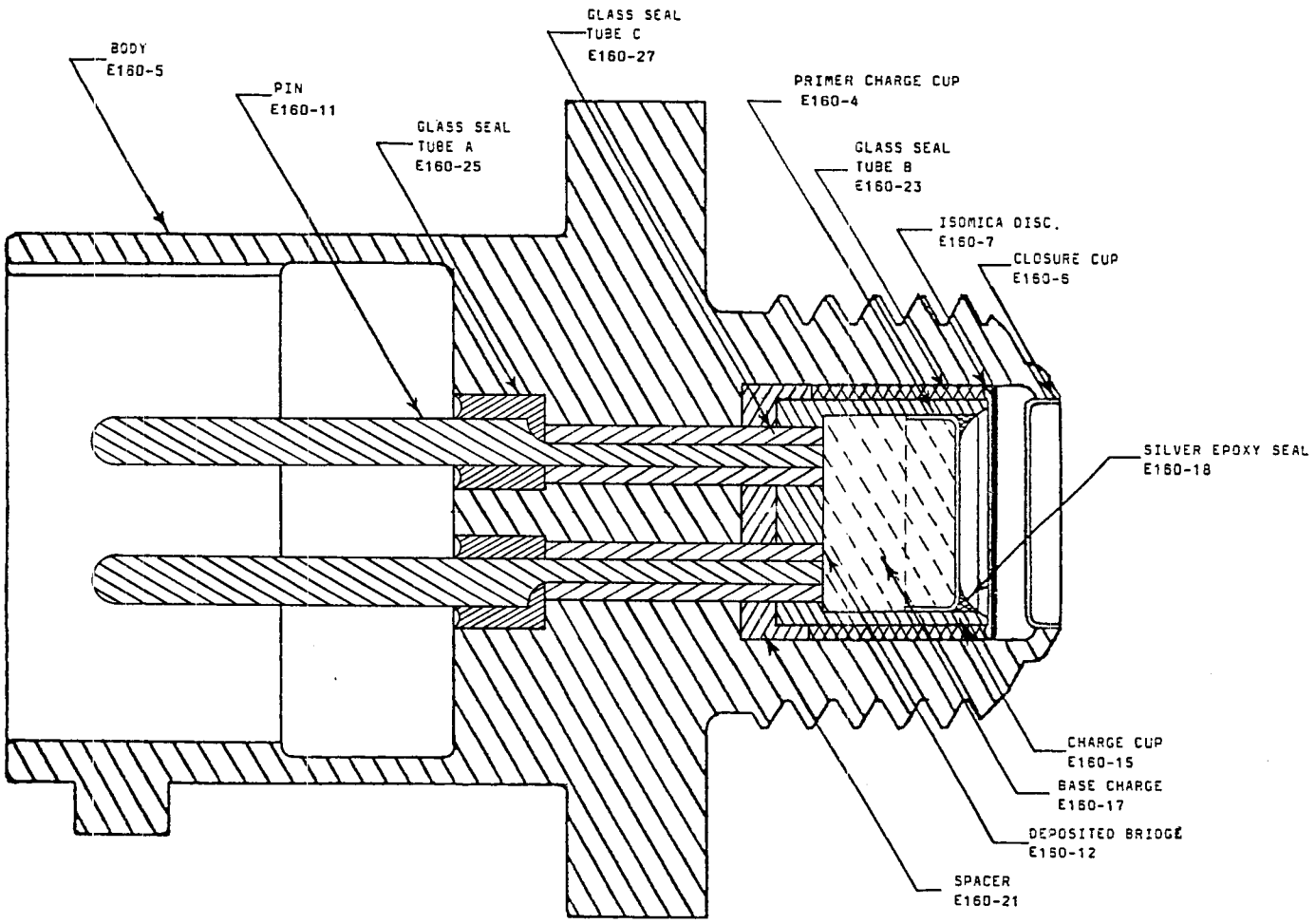

ORIGINAL PAGE IS OF POOR QUALITY

DRAWING TOLERANCES UNLESS OTHERWISE SPECIFIED DEC. ± ANGLES ± DEG. CONCENTRICITY T.I.R. FINISH R.M.S.	ROBERTS RESEARCH LABORATORY 23150 KASHIWA COURT TORRANCE, CALIFORNIA 90505-4027	
	DRAWN BY: ACR	SCALE: 10/1
	APPROVED BY: ACR	DATE: 1/6/88
NSI - 2		DRAWING NUMBER C160-16

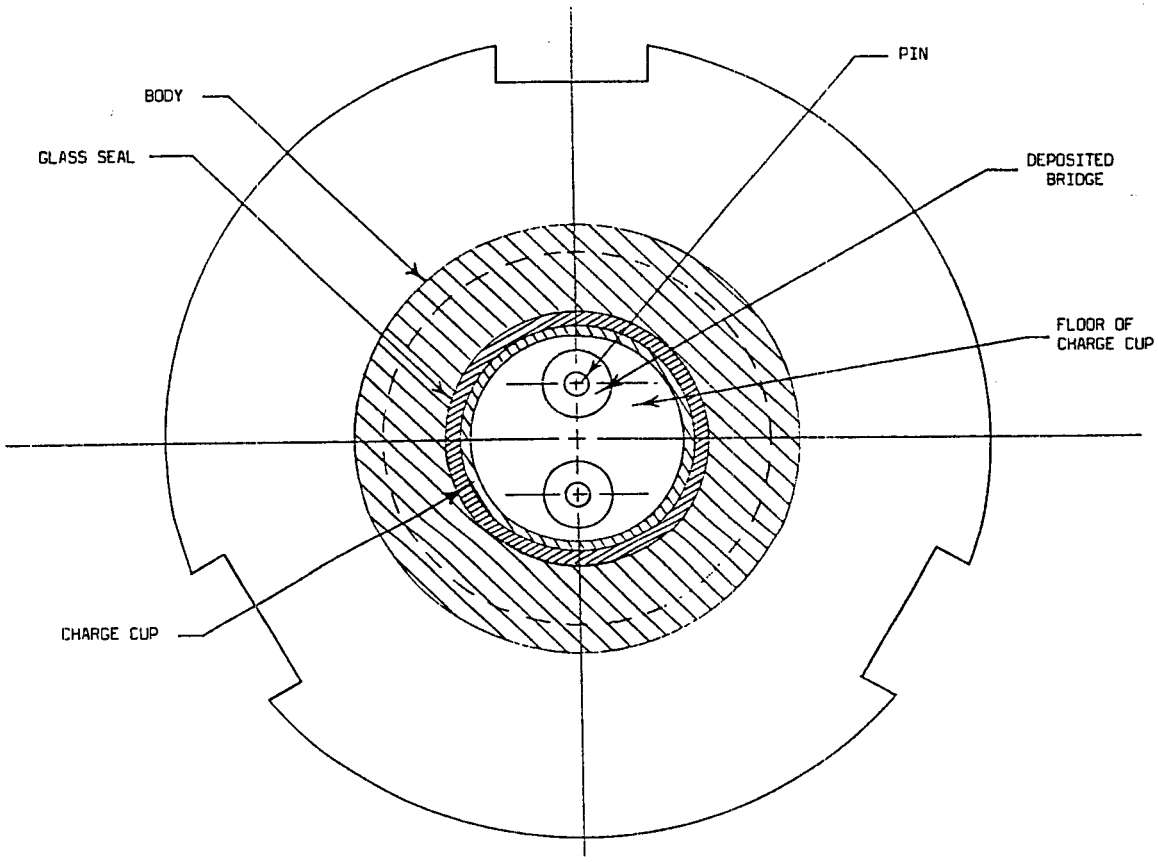

SECTION BB VIEW WITH PRIMER AND BASE CHARGE REMOVED

DRAWING TOLERANCES UNLESS OTHERWISE SPECIFIED DEC. ±_____ ANGLES ±_____ DEG. CONCENTRIC _____ T.I.R. FINISH_____ R.M.S.	ROBERTS RESEARCH LABORATORY 23150 KASHIWA COURT TORRANCE, CALIFORNIA 90505-4027	
	DRAWN BY: ASR	SCALE:
	APPROVED BY: ASR	DATE: 5/4/88
DEPOSITED BRIDGE LOCATION		DRAWING NUMBER D160-5

there exists no path from shorted pins to ground through the explosive charge. Therefore, no amount of electrostatic discharge from shorted pins to ground could ever initiate the unit.

Because the explosive charge is totally encased in the metallic charge cup and vacuum deposited titanium bridge, forming a Faraday shield as demonstrated in the attached drawing, the explosive charge is protected from any high voltage caused by arcing from shorted pins to ground. Any electrostatic discharge must pass from the pins to the charge cup through a low resistance path. If an arc forms, it forms between the outside of the charge cup and the body, or ground, outside of the explosive mixture in the charge cup.

Our use of glass-to-metal sealing techniques makes the charge cup integral with the initiator body. The seal has a number of advantages. Most importantly, use of a glass-to-metal seal bonds the charge cup to the body, eliminating potential movement of the charge cup and body with respect to the pins. The integration of pins to cup greatly reduces the likelihood of dudding as a result of bridge circuit breakage.

Investigating cost and reliability improvements for the bridge circuit led us to the concept of a vacuum deposited titanium bridge. The concept of a vacuum deposited bridge has been tried in many military applications. The vacuum deposited bridge requires less manufacturing skill after initial set-up, reduces production costs and has the advantage of integrating the bridge with the charge cup and pins. In addition, the use of a titanium vacuum deposited bridge ensures a complete Faraday shield, as the entire surface of the charge cup and glass seal are covered.

For the NSI-2, Roberts Research Laboratory developed a modified primer or bridge composition consisting of 49% zirconium, 47% potassium perchlorate, 4% Y-338 Thermodur and 16% xylene. To get higher uniformity and reliability, we needed potassium perchlorate of a particle size approximately the same as that of the zirconium in the composition. The only commercially available potassium perchlorate was of a much larger particle size, 20 microns ± 5 microns per Class 4 of MIL-P-217.

Grinding the potassium perchlorate dry was unsuccessful because of caking. Grinding it wet with such non-solvents as isopropyl alcohol was somewhat dangerous and did not result in the desired uniformity of particle size.

We then tried dissolving the Class 4, MIL-P-217, potassium perchlorate in boiling water and injecting the potassium

perchlorate/water solution into highly agitated reagant grade isopropyl alcohol, which threw the potassium perchlorate out of solution. We then decanted, filtered and dried the potassium perchlorate. The average particle size after this process was 3 microns, quite close in size to the zirconium particles.

The base charge consisted of 50% zirconium, 47% potassium perchlorate (3 micron particle size) and 3% Viton-B. The Viton-B was dissolved in an excess of acetone. The zirconium and potassium perchlorate were added and dispersed under high agitation. The Viton-B was shock gelled by rapidly adding hexane to the highly agitated mixture above. This uniformly coated all the particles with a non-sticky coating of Viton-B. The material was decanted, filtered, partially dried, granulated and thoroughly dried.

By reducing the particle size of the potassium perchlorate through controlled high speed precipitation, we achieved small particle size, giving the pyrotechnic composition greater uniformity. This greater uniformity leads, in effect, to higher sensitivity at cold temperatures.

After exploring a number of alternatives for preventing detonator shock-induced movement of the primer composition away from the bridge circuit, we settled on a technique of painting onto the bridge a thin, low mass pyrotechnic composition with tenacious bond characteristics. A version of this method, used very successfully in both the Mercury and Gemini projects, causes the primer composition to resist forward movement. Should the base charge move away from the bridge circuit, the output of the painted on primer composition is sufficient to flash across the distance and ignite the base charge.

We believe that we have solved the design problems posed by the Statement of Work and offer our test data as verification of that success.

SUMMARY OF PROJECT REQUIREMENTS

The new configuration, NSI-2, meets the configurational, performance and environmental requirements outlined in the Statement of Work with the exceptions noted in the report entitled "Discussion of Unresolved Problems."

The envelope conforms to NASA specification control drawing SLB 26100110 in accordance with Paragraph 2.1.1 of the Statement of Work.

The end closure consists of a 304 L stainless steel cup welded to the body in accordance with Paragraph 2.1.2 of the Statement of Work.

The NSI-2 is hermetically sealed by a glass-to-metal seal in accordance with Paragraph 2.1.3 of the Statement of Work. There is no leakage from the loaded, sealed NSI-2 in excess of 5×10^{-6} cm^3/second of helium at one atmosphere pressure differential, as evidenced in Paragraph 2.3 of the accompanying test data.

The NSI-2 has a deposited bridge which is electrically insulated from the body in accordance with Paragraph 2.1.4 of the Statement of Work. The initiating bridge resistance is 1.05 ohms ± 0.10 ohms, as evidenced by Paragraph 2.4 of the accompanying test data.

The NSI-2 is natural color and has no protective coating or plating in accordance with the requirements of Paragraph 2.1.5 of the Statement of Work.

The NSI-2 uses a zirconium/potassium perchlorate pyrotechnic material in accordance with Paragraph 2.1.6 of the Statement of Work.

The NSI-2 withstands 150 inch-pounds of torque applied to the wrenching area with no evidence of damage in accordance with Paragraph 2.1.7 of the Statement of Work.

The NSI-2 performs aafter temperature cycling of +300° F to -260° F with a rate of change of at least 200° F per minute, as specified in Paragraph 2.2.1.1.2 of the Statement of Work and as evidenced in Paragraph 2.8 of the accompanying test data.

The NSI-2 performs after being subjected to sawtooth shock of 100 g's with an 11 millisecond rise and a 1 millisecond delay as required in accordance with Paragraph 2.2.1.2.1 of the Statement of Work and as verified in Paragraph 2.9 of the accompanying test data.

The NSI-2 performs after being subjected to pyrotechnic shock of a detonation impulse at -450° F in accordance with Paragraph 2.2.1.2.2 of the Statement of Work, except as noted in the preliminary report of NASA test results and the discussion of test results.

The NSI-2 performs after being subjected to random vibration at -65° F in three orthogonal axes as required by Paragraph 2.2.1.3.1 of the Statement of Work and as verified in Paragraph 2.10 of the accompanying test data.

The NSI-2 performs after being subjected to random vibration at -260° F in three orthogonal axes as required by Paragraph 2.2.1.3.2 of the Statement of Work and as verified in Paragraph 2.11 of the accompanying test data.

The NSI-2 meets the humidity requirements of Paragraph 2.2.1.4 of the Statement of Work by similarity. The Roberts Research Laboratory NSI-2 uses a pyrotechnic composition of zirconium and potassium perchlorate.

The NSI-2 is hermetically sealed and, because of similarity of the pyrotechnic components to the NSI-1, meets the vacuum pressure requirement of 10^{-10} Torr for 360 hours in accordance with Paragraph 2.2.1.5 of the Statement of Work.

The unloaded assembly of the NSI-2 withstands a single thermal shock from ambient temperature to -320° F in less than two (2) seconds. There is no evidence of structural degradation or leaking in accordance with Paragraph 2.2.2 of the Statement of Work, as evidenced by Paragraph 2.1 of the accompanying test data.

The NSI-2 does not fire when exposed to a temperature of +400° F for one hour in accordance with Paragraph 2.2.3 of the Statement of Work, as evidenced by Paragraph 2.7 of the accompanying test data. In addition, all units are subjected to +400° F for one hour in the process of loading.

The NSI-2 does not initiate when the bridge circuit is subjected to a dc current of one ampere for five minutes at +300° F without the aid of heat sinks. The unit functions after being subjected to these conditions in accordance with Paragraph 2.3.1.1 of the Statement of Work.

The NSI-2 does not initiate when the bridge circuit is subjected to a dc power of one watt for five minutes at 300° F without the aid of heat sinks. The unit functions after being subjected to these conditions in accordance with Paragraph 2.3.1.2 of the Statement of Work.

The NSI-2 bridge circuit withstands twenty-five (25) applications of a fifty (50) milliampere pulse of one minute duration without degradation in accordance with Paragraph 2.3.1.3 of the Statement of Work.

The NSI-2 withstands an AC voltage of 200 (±10) volts rms for one minute between the body and both pins shorted together with a leakage current of less than 500 microamperes. After being subjected to these conditions, the NSI-2 meets ignition and performance requirements in accordance with Paragraph 2.3.1.4 of the Statement of Work.

The resistance between the NSI-2 body assembly and the pins is a

minimum of 2 megohms when measured with a potential of 250 VDC for fifteen (15) seconds in accordance with Paragraph 2.2.1.5 of the Statement of Work, as evidenced in Paragraph 2.5 of the accompanying test data.

The NSI-2 does not fire or dud when subjected to an electrostatic discharge of 25,000 VDC from a 500 picofarad capacitor between both pins shorted together and the NSI-2 body, in accordance with the requirements of Paragraph 2.3.1.6 of the Statement of work.

The NSI-2 ignites and performs after being subjected to constant current tests described in Paragraph 2.3.2.1 of the Statement of Work. The time from application of current to the start of pressure rise does not exceed 5.0 milliseconds and the time from start of pressure rise to 525 PSI or peak pressure does not exceed 1.0 milliseconds, as verified in Paragraphs 2.13, 2.14 and 2.15 of the accompanying test data.

The NSI-2 ignites and performs after being subjected to capacitor discharge tests described in Paragraph 2.3.2.2 of the Statement of Work. The time from application of current to 525 PSI or peak pressure does not exceed 1.0 milliseconds as verified in Paragraphs 2.13, 2.14 and 2.15 of the accompanying test data.

The pressure output for the NSI-2 is as required by Paragraph 2.3.3 except as noted in the discussion of test results and the report on unresolved problems.

Generally, the units meet the success criteria for individual units specified in Paragraph 4.3.1 of the Statement of Work. The design and verification tests outlined in the NSI-2 Statement of Work have been accomplished.

RESULTS OF VERIFICATION TESTING

ON

NASA STANDARD INITIATOR - 2

(NSI-2)

ROBERTS RESEARCH LABORATORY

PRE-PRODUCTION THERMAL SHOCK TEST

This test was performed to meet requirements of Statement of work Paragraphs 2.2.2 and 4.1.5.

Date: February 1, 1988

Serial Numbers: B1-B10, D1-D8

Method:

All units were glass sealed. Prior to loading, units were stabilized at ambient temperature, plunged into liquid nitrogen to lower the unit temperature to -320° F. and allowed to soak for 15 minutes. The units were removed and returned to ambient temperature.

A short aluminum tube was used to seal between the test unit and the hydraulic pressure chamber. This sealed between the output end of the electric initiator and the pressure chamber, thereby eliminating pressure on the O ring seal. The O ring acts as a force amplifier and makes the strength of the threads marginal at 40,000 PSI.

Units were then subjected to a hydrostatic pressure of 40,000 PSI. No back-up support, such as wrenching flange or connector shell, was used. Water was used as the hydraulic fluid.

Results:

There was no apparent leakage at 40,000 PSI. All units were microscopically examined after conclusion of the hydrostatic pressure tests. There was no evidence of structural degradation or leakage. The units were then thoroughly dried at +400° F for one hour.

Tested by _____

RRL Quality Assurance _____

Chief Engineer _____

NEUTRON RADIOGRAPHY

This test was performed to meet the requirements of Statement of Work Paragraph 4.1.1.4.

Date: February 10, 1988

Serial Numbers: A1-A2, B1-B10, C1-C10, D1-D8, E1-E2, F1-F4

Method:

Units were subjected to neutron radiography per Aerotest Procedure A01001, Revision B.

Results:

Glass-to-metal seals were shown to be very poor because of considerable voids, particularly the seal between the charge cup and body.

Equipment:

See attached test report from Aerotest Operations.

RRL Quality Assurance Linda Corbin-Roberts RRL QA

Chief Engineer A S Roberts

ROBERTS RESEARCH LABORATORY

NEUTRON RADIOGRAPHY CERTIFICATION SHEET

AEROTEST OPERATIONS, INC.

3455 FOSTORIA WAY • SAN RAMON, CALIFORNIA 94583 • (415) 866-1212

1. Customer: Roberts Research Laboratory
2. P.O. No.: 13362
3. Date(s) of Exposure: 2/10/88
4. Film Type: SR-5
5. Description of Parts Radiographed:

   36 ea. NSI-2 Iniitators

6. Handling Of Individual Parts:

   Premounted by Customer: Yes (X) No ( )

   Serialized by Customer: Yes ( ) No (X)

7. Number of Radiographs in this Lot:

   Original Exposures: 1 Duplicate Exposures: ____

   Copies: 1 Prints: ____

8. Serial Number(s) of Neutron Radiographs: #207874

9. Exposure Data:

   Exposure Period: 3.2 min.

   Rate of Exposure: 9.95×10^6 n/cm^2-sec 0.0075 R/sec

S/N's	Number of Times Exposed
#207874	2

10. Method of Neutron Radiography Used is: Direct
11. Resolution: Standard (3 mils/inch)* (X) Other ( ) ____
12. Maximum Deviation of Neutron Beam from Perpendicular at Corners of 14" x 17" Radiograph - 2.5°
13. Comments:
14. Certification: Radiography per Specification No. ( ) A.O. 1001, Rev. B

    (X) Other ASTM-E545

Neutron Radiographer

* Determined by ability to see 6 mil diameter nylon rod 2 inches from film with 1/8" lucite absorber interposed between rod and film.

ROBERTS RESEARCH LABORATORY A.O. (Rev. [illegible]/75)

20191

HERMETIC SEAL TEST

This test was performed to insure units meet requirements of Statement of Work Paragraph 2.1.3 when tested under the conditions of Paragraph 4.1.1.1.

Date: February 11, 1988

Serial Numbers: A1-A2, B1-B10, C1-C10, D1-D8, E1-E2, F1-F4

Method:

Units were subjected to a pressure of 1 inch Hg absolute for 5 minutes. They were then subjected to helium at 2 atmospheres for 15 minutes. Helium was then held at 1 atmosphere until testing was performed. Units were removed from helium environment and measurement was made within 5 minutes.

Results:

Measurements verified that the sealed, loaded samples units had no leakage in excess of 5×10^{-6} cc./sec. when measured at one atmosphere pressure differential.

Equipment:

Veeco SR-4	Calibrated Leak
Veeco MS-9	Leak Detector
Roberts Research	Bombing Station

Tested by D E Roberts

RRL Quality Assurance Linda Carlin-Roberts RRL A1

Chief Engineer A L Roberts

ROBERTS RESEARCH LABORATORY

INITIATING BRIDGE RESISTANCE TEST

This test was performed to insure units meet requirements of Statement of Work Paragraph 4.1.1.3.

Date: February 11, 1988

Serial Numbers: A1-A2, B1-B10, C1-C10, D1-D8, E1-E2

Method:

Ohmmeter leads were soldered to Bendix PT connector and the ohmmeter was zeroed with a u-shaped copper shorting pin plugged into the connector. Units were required to have a resistance of 1.05 ± 0.10 ohms.

Results:

SERIAL NUMBER	OHMS	SERIAL NUMBER	OHMS	SERIAL NUMBER	OHMS
A1	0.96	C1	0.95	D3	1.09
A2	1.02	C2	0.96	D4	1.03
B1	1.10	C3	1.01	D5	1.11
B2	0.96	C4	1.03	D6	1.09
B3	1.05	C5	0.98	D7	1.01
B4	0.97	C6	0.99	D8	1.11
B5	0.98	C7	0.96	E1	0.97
B6	1.12	C8	1.08	E2	1.13
B7	1.10	C9	1.11	F1	1.01
B8	1.12	C10	1.02	F2	0.97
B9	1.08	D1	1.03	F3	0.99
B10	1.13	D2	1.15	F4	1.04

Equipment:

Hickok Multimeter Model MX33

Tested by D E Roberts

RRL Quality Assurance Linda Corbin-Roberts RRL A1

Chief Engineer D E Roberts

ROBERTS RESEARCH LABORATORY

INSULATION RESISTANCE TEST

This test was performed in accordance with Statement of Work Paragraph 4.1.1.2 to insure that the units met the performance criteria outlined in Paragraph 2.3.1.5.

Date: February 11, 1988

Serial Numbers: A1-A2, B1-B10, C1-C10, D1-D8, E1-E2, F1-F4

Method:

One lead of megohmmeter was soldered to both sockets of a Bendix PT connector and plugged into the unit. The other lead had an alligator clip attached and was connected to the flange of the NSI-2 unit. 250 volts DC was applied for 15 seconds between pins and case. Insulation resistance was measured.

Results:

SERIAL NUMBER	MEGOHMS	SERIAL NUMBER	MEGOHMS	SERIAL NUMBER	MEGOHMS
A1	5.8×10^1	C1	9.9×10^2	D3	2.9×10^3
A2	3.0×10^4	C2	7.4×10^3	D4	1.0×10^4
B1	7.2×10^3	C3	2.1×10^3	D5	4.6×10^3
B2	6.7×10^3	C4	3.9×10^3	D6	8.2×10^3
B3	8.1×10^2	C5	8.7×10^2	D7	8.3×10^3
B4	2.1×10^4	C6	5.6×10^3	D8	7.7×10^3
B5	2.6×10^3	C7	2.1×10^4	E1	2.3×10^4
B6	7.3×10^2	C8	4.7×10^3	E2	5.6×10^3
B7	9.6×10^2	C9	6.1×10^3	F1	6.8×10^3
B8	1.2×10^4	C10	8.2×10^3	F2	3.2×10^3
B9	8.6×10^3	D1	1.6×10^3	F3	4.7×10^3
B10	6.5×10^3	D2	3.8×10^3	F4	1.6×10^4

Units met the requirement for a minimum of two megohms insulation resistance.

Equipment:

MEGCHEK High Range Megohmmeter Associated Research Model 2802D

Tested by _____

RRL Quality Assurance _____ RRL A1

Chief Engineer _____

ROBERTS RESEARCH LABORATORY

ELECTROSTATIC SENSITIVITY TEST

This test was performed to meet the requirements of Statement of Work Paragraph 4.1.1.5.

Date: February 11, 1988

Serial Numbers: A1-A2, B1-B10, C1-C10, D1-D8, E1-E2, F1-F4

Method:

Loaded units were subjected to an electrostatic discharge of 25,000 volts DC from a 500 picofarad capacitor between both pins shorted together and the initiator body. Test set-up was in accordance with Figure 3 of Statement of Work. Cycle was repeated 10 times per unit.

Results:

Units did not fire or dud.

Equipment:

Spellman High Voltage Power Supply. Model RHC30PF30
Kilovac Model H-35/115 VDC High Voltage Relay
Plastic Capacitor Model OF300-501 500 picofarad 30KVDCW

Tested by D E Roberts

RRL Quality Assurance Linda Corbin-Roberts

Chief Engineer A S Roberts

ROBERTS RESEARCH LABORATORY

MAXIMUM NO-FIRE CURRENT TEST and
MAXIMUM NO-FIRE POWER TEST

This test was performed to meet the requirements of Statement of Work Paragraphs 2.3.1.1 and 2.3.1.2.

Date: February 19, 1988

Serial Numbers: F1-F4

Method:

Units were subjected to 1 amp constant current for five minutes at +300° F with the initiator suspended by a 0.020" diameter wire through the lock wire hole.

The voltage drop across the bridge was measured, allowing calculation of the bridge resistance at the high temperature.

Results:

In all cases, the resistance exceeded 1 ohm. Therefore, the units were tested at 1 amp and at in excess of 1 watt at the same time to fulfill the requirements of Paragraphs 2.3.1.1 and 2.3.1.2.

Equipment:

Constant Current Power Supply PS6BR E & R Development

Tested by _____

RRL Quality Assurance _____ RRL A1

Chief Engineer _____

ROBERTS RESEARCH LABORATORY

CONTINUITY CURRENT TEST

This test was performed to meet the requirements of Statement of Work Paragraphs 2.3.1.3.

Date: February 19, 1988

Serial Numbers: F1-F4

Method:

Units were subjected to 25 applications of a 50 milli-ampere pulse with a duration of one minute per pulse through the initiating bridge.

Results:

There was no evidence of degradation.

Equipment:

Constant Current Power Supply PS6BR E & R Development

Tested by _____

RRL Quality Assurance _____

Chief Engineer _____

AUTOIGNITION TEST

This test was performed to insure units meet requirement of Statement of Work Paragraph 2.2.3.

Date: February 11, 1988

Serial Numbers: A1-A2

Method:

Units were placed in temperature chamber at 400° F. for one hour. Units were then examined for evidence of premature ignition.

Results:

Units showed no signs of degradation.

Equipment:

Missimer Chamber FT1-100
Leeds Northrup Potentiometer Copper Constantan

Tested by _____

RRL Quality Assurance _____ RRL A1

Chief Engineer _____

ROBERTS RESEARCH LABORATORY

TEMPERATURE CYCLING TEST

This test was performed to insure units meet the requirements of Statement of Work Paragraph 2.2.1.1.2.b.

Date: February 11, 1988

Serial Numbers: B1-B10, C1-C10

Method:

Units were placed in Missimer temperature chamber at +300° F, removed and immediately placed in Associated temperature chamber at -260° F. The rate of change of temperature was at least 200° F per minute. This cycle was repeated twenty times.

Results:

There was no evidence of degradation after completion of twenty cycles.

Equipment:

Missimers Temperature Chamber FT1-100
Modified Associated Temperature Chamber Model SK-2101

Tested by D E Roberts

RRL Quality Assurance Linda Carbin-Roberts RRL A1

Chief Engineer A C Roberts

ROBERTS RESEARCH LABORATORY

SHOCK TEST

This test was performed to insure units meet requirements of Statement of Work Paragraph 2.2.1.2.1.

Date: February 12, 1988

Serial Numbers: A1-A2, B1-B10, C1-C10, D1-D8, E1-E2, F1-F4

Method:

Units were subjected to a sawtooth shock procedure of 100 G's with an 11 millisecond rise and a 1 millisecond delay. Test was repeated three times in each of three mutually perpendicular axes.

Results:

There was no evidence of degradation.

Equipment:

See attached test report 533-8201 from National Technical Systems.

RRL Quality Assurance Linda Corbin-Roberts

Chief Engineer

ROBERTS RESEARCH LABORATORY

Report No. 533-8201
P. O. No. 13364
Date: 15 February 1988

13 Page Report

Los Angeles Facility

Roberts Research Laboratory
23150 Kashiwa Court
Torrance, California 90505-4027

TEST UNITS

NSI'S, Part Number NSI-2, Serial Numbers A1, A2, B1 through B10, C1 through C-10, D1 through D8, E1, E2, and F1 through F4 (Quantity 36)

SUMMARY

This report certifies that the test units identified above have been subjected to the Shock and Random Vibration Tests in accordance with the above-mentioned purchase order and Attachment A to the purchase order. Visual examination at the conclusion of both tests revealed no evidence of physical damage to the units due to the shock and vibration exposures.

TEST EQUIPMENT

NTS No.	Manufacturer	Instrument	Model No.
Shock Test			
D5L	Barry Controls	Shock Test Machine	VP-150
D59L	Endevco Corp.	Accelerometer	2224C
D487L	Unholtz Dickie	Charge Amplifier	D22PMSLT
D581L	Stephens Trusonic, Inc.	Vibration Exciter	ST10A
D582L	NTS	Amplifier	None
D624L	Rockland	Filter	452
E209L	Tektronix, Inc.	Storage Oscilloscope	549
E210L	Tektronix, Inc.	Dual Trace Plug-In Unit	1A1
E609L	Tektronix, Inc.	Oscilloscope Camera	C5C
Random Vibration Test			
D84L	M. B. Electronics	Vibration Exciter	C-150
D228L	Bruel & Kjaer	Voltmeter	2416
D483L	Unholtz Dickie	Charge Amplifier	D22PMSLT
D635L	Tektronix, Inc.	Oscilloscope	2213A
D652L	Bruel & Kjaer	Accelerometer	4368
D660L	Ling	Amplifier	120/150
D684L	Unholtz Dickie	Digital Control System	400AT
ENV152L	John Fluke	Digital Thermometer	2165A-J

NOTE: The test equipment specified above was calibrated, as required, in accordance with MIL-STD-45662, Notice 3, with traceability to the National Bureau of Standards. The NBS traceability records are maintained on file in the NTS/Testing Division Quality Control Office.

TEST PROCEDURES AND TEST RESULTS

Shock Test

Date Performed: 12 February 1988

The NSI'S, identified above, were simultaneously installed in a test fixture and were mounted on the shock test machine. The NSI'S were subjected to one shock pulse in each of the three major orthogonal axes. Each shock pulse had an amplitude of 100 g, a duration of 11 ms, and approximated a terminal peak sawtooth shape.

The Polaroid photographs of the shock pulses are presented in this report in Appendix 1. Visual examination at the conclusion of testing revealed no evidence of physical damage to the units due to the shock exposure.

Random Vibration Test

Date Performed: 12 February 1988

The NSI'S, identified above, were simultaneously installed in a test fixture and were mounted on the vibration exciter. The units were subjected to six minutes and five minutes of random vibration testing at temperatures of -65°F (-53.9°C) and -260°F (-162°C), respectively, at the following intensities:

Frequency (Hz)	Intensity (g^2/Hz)
-65°F (-53.9°C)	
20	0.2
20 - 40	Logarithmic Increase
40 - 60	0.4
60 - 100	Logarithmic Increase
100 - 350	1.0
350 - 600	Logarithmic Increase
600 - 1000	3.0
1000 - 2000	Logarithmic Decrease
2000	0.6
Overall Acceleration: 57.71 grms	
-260°F (-162°C)	
10	0.01
10 - 100	Logarithmic Increase
100 - 400	0.80
400 - 2000	Logarithmic Decrease
2000	0.16
Overall Acceleration: 27.97 grms	

TEST PROCEDURES AND TEST RESULTS (CONT.)

Random Vibration Test (Cont.)

One axis of testing was completed at both levels and temperatures prior to rotation to the subsequent axis. Testing was performed in each of the three major orthogonal axes.

The PSD plots are presented in this report in Appendix 2. Visual examination at the conclusion of this portion of testing revealed no evidence of physical damage to the units due to the random vibration exposure.

2-16-88

Reviewed and Approved by Edmund T. Watts, Program Manager Date

Karl G. Schmidt 2-16-88

Approved by Karl G. Schmidt, Quality Assurance Manager Date

APPENDIX 1

Polaroid Photographs

of

Shock Pulses

CALIBRATION

ORIGINAL PAGE IS
OF POOR QUALITY

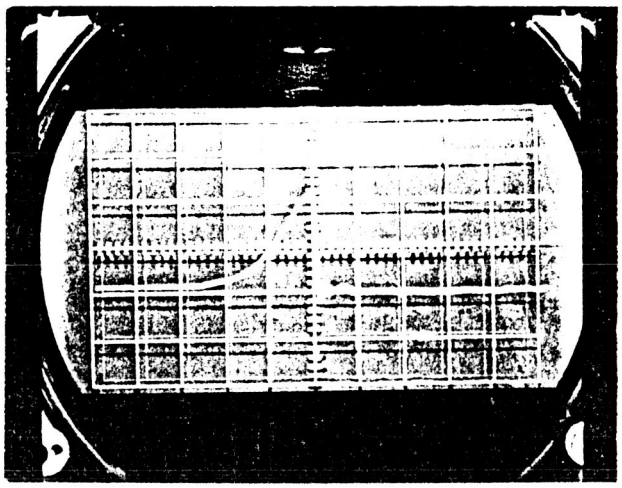

CAL

Vertical Sensitivity: 50 g/div.

Horizontal Sensitivity: 5 ms/div.

X AXIS

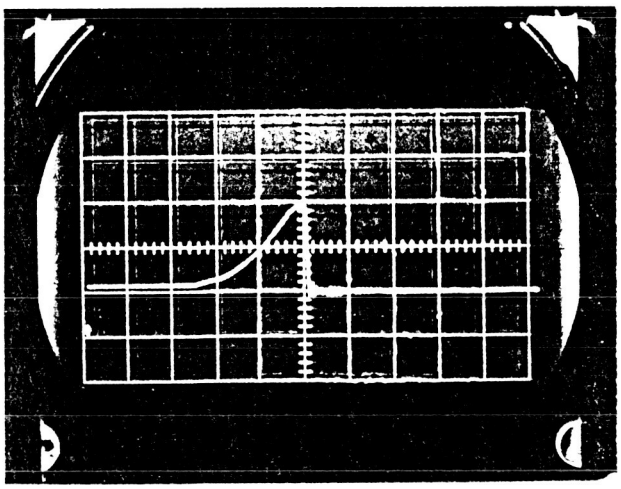

3

Vertical Sensitivity: 50 g/div.

Horizontal Sensitivity: 5 ms/div.

369

Y AXIS

ORIGINAL PAGE IS
OF POOR QUALITY

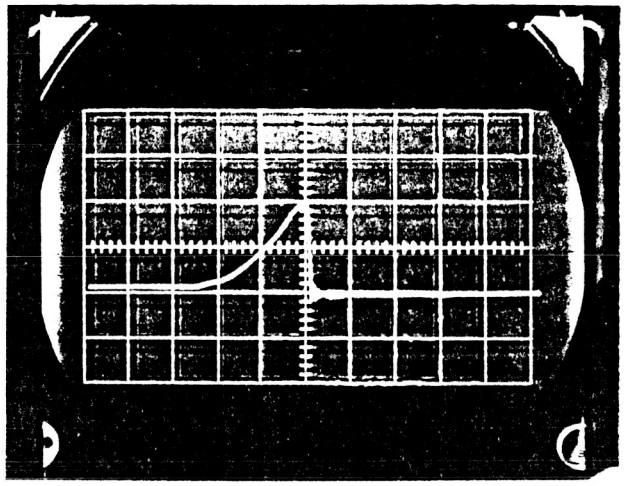

Vertical Sensitivity: 50 g/div.

Horizontal Sensitivity: 5 ms/div.

Z AXIS

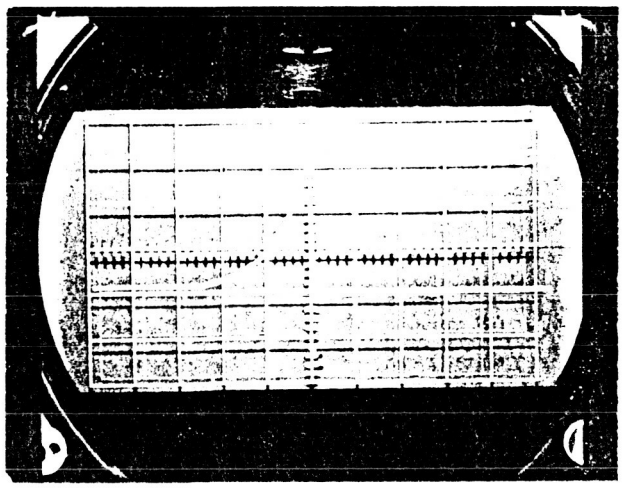

Vertical Sensitivity: 50 g/div.

Horizontal Sensitivity: 5 ms/div.

369

APPENDIX 2

PSD Plots

for

Random Vibration Test

PLOT #1

TEST SETUP ID: ROBRES1 TEST RUN NAME: X-AXIS-@-65F

02/12/88
15:47:59

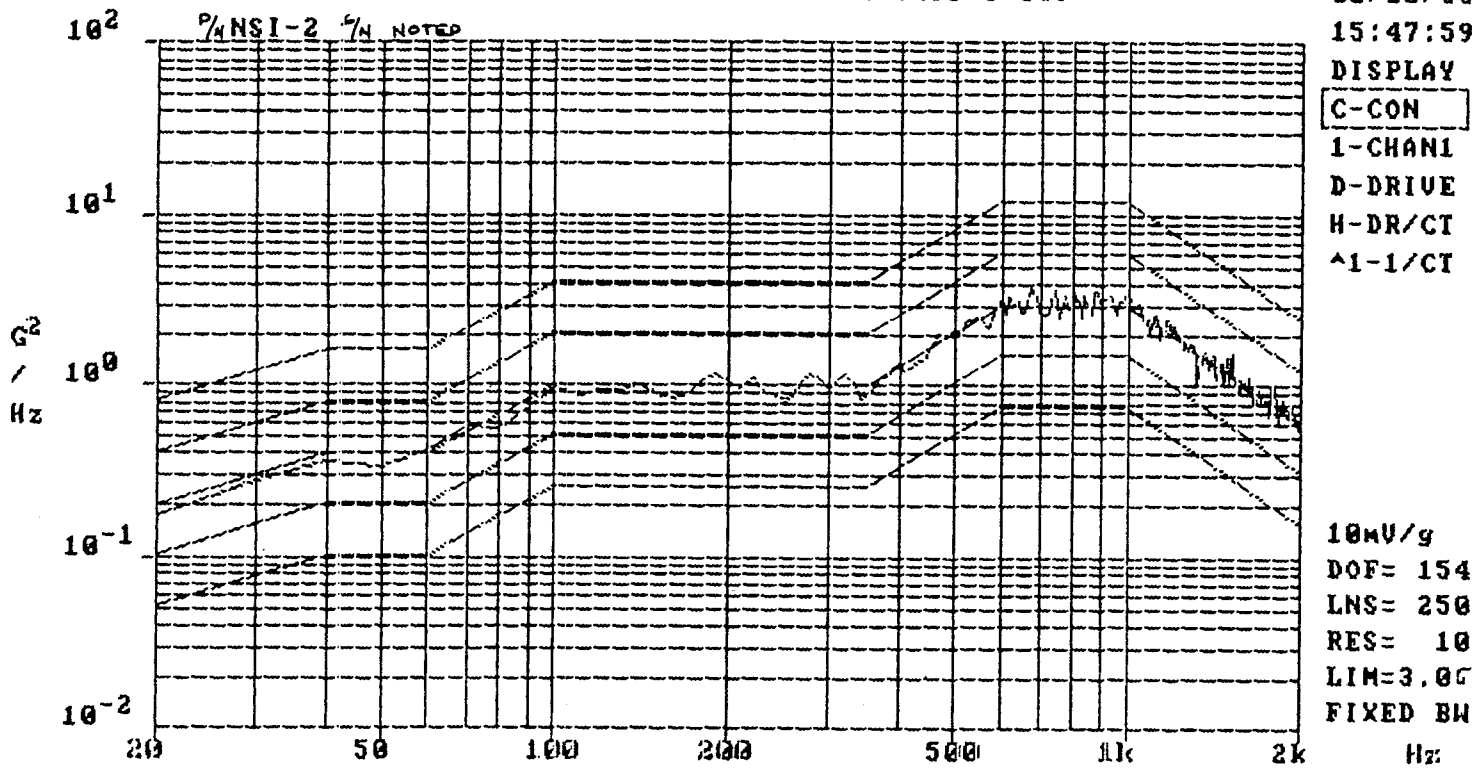

REF GRMS: 57.71 AUTO:00:07:00 STATUS: Finished

CON GRMS: 57.08 TOTL:00:07:31 LEVEL : 0.0dB CHAN SEQ:1

CONTROL @ -65°F
X-AXIS

ROBERTS RESEARCH LABORATORY

PLOT→3

TEST SETUP ID: ROBRES1 TEST RUN NAME: Y-AXIS@-65F

02/12/88
16:52:08

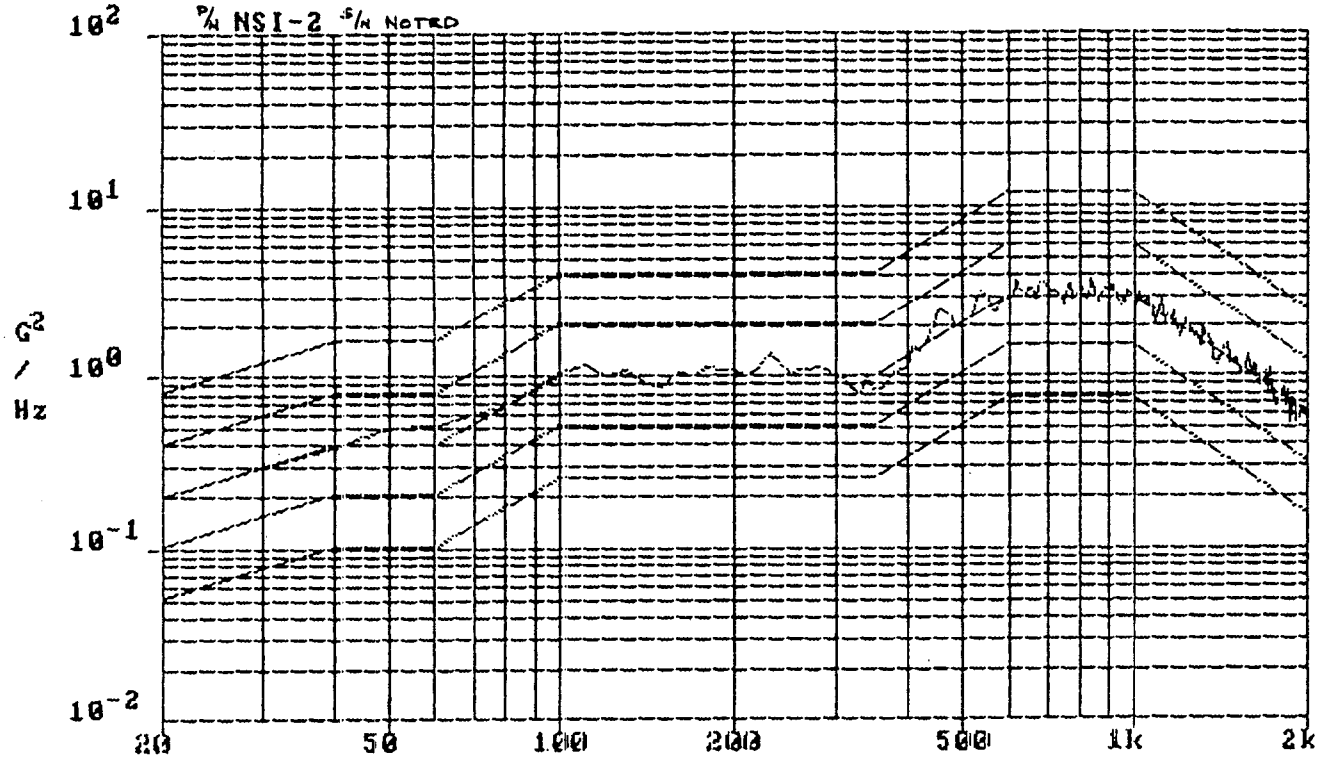

DISPLAY
C-CON
1-CHAN1
D-DRIVE
H-DR/CT
^1-1/CT

10mV/g
DOF= 154
LNS= 250
RES= 10
LIM=3.0G
FIXED BW

REF GRMS: 57.71 AUTO:00:06:58 STATUS: Finished
CON GRMS: 57.63 TOTL:00:07:28 LEVEL : 0.0dB CHAN SEQ:1

CONTROL @ -65°F
Y-AXIS

PLOT #6

TEST SETUP ID: ROBRES1 TEST RUN NAME: Z-AXIS@-65F

02/12/88
18:49:53

P/N NSI-2 S/N NOTED

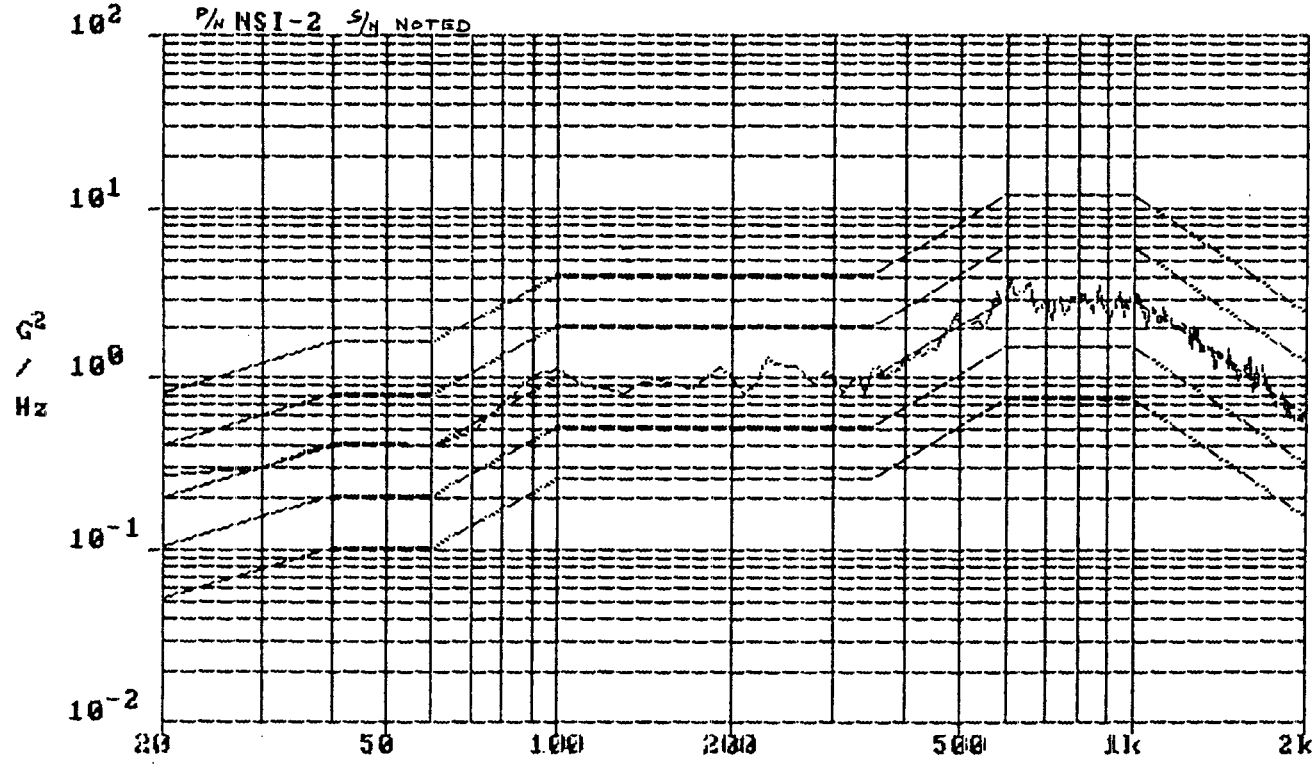

DISPLAY
C-CON
1-CHAN1
D-DRIVE
H-DR/CT
^1-1/CT

10mV/g
DOF= 154
LNS= 250
RES= 10
LIM=3.0σ
FIXED BW

REF GRMS: 57.71 AUTO:00:07:00 STATUS: Finished
CON GRMS: 56.21 TOTL:00:07:30 LEVEL : 0.0dB CHAN SEQ:1

CONTROL @ -65°F
Z-AXIS

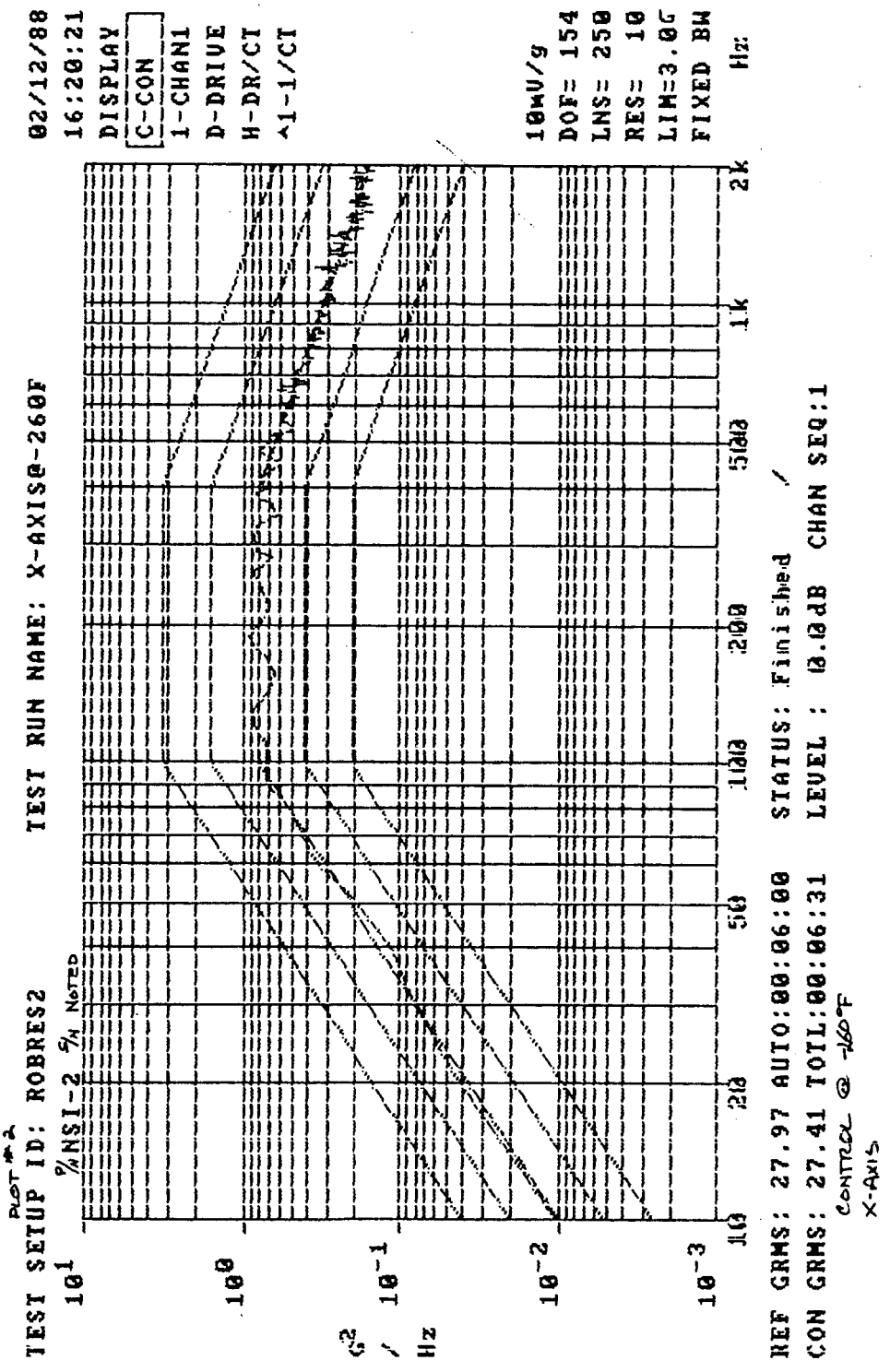

ORIGINAL PAGE IS
OF POOR QUALITY

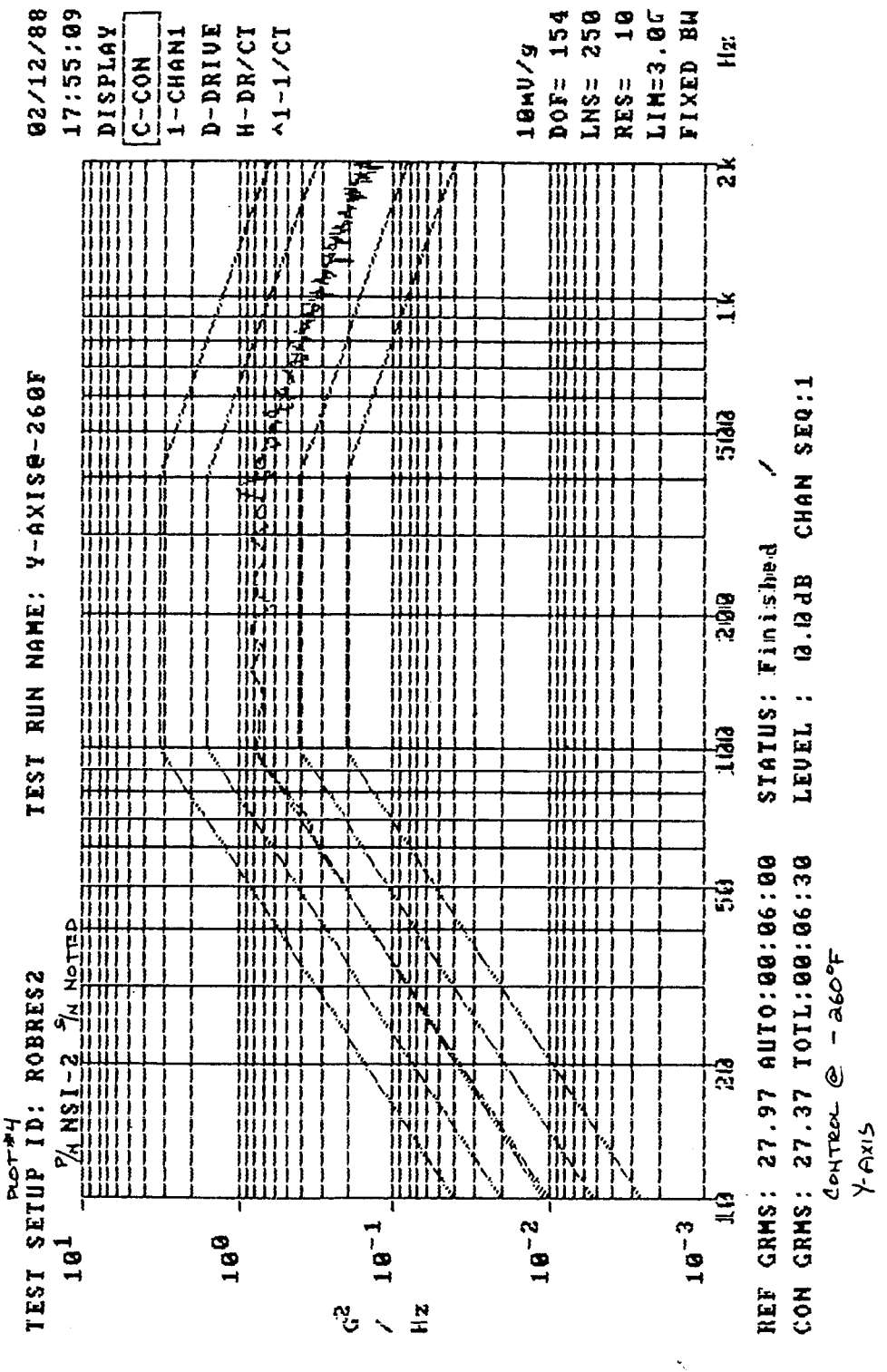
TEST SETUP ID: ROBRES2
TEST RUN NAME: Y-AXIS@-260F
02/12/88
17:55:09
DISPLAY
C-CON
1-CHAN1
D-DRIVE
H-DR/CT
^1-1/CT
10mV/g
DOF= 154
LNS= 250
RES= 10
LIM=3.0G
FIXED BW
Hz
REF GRMS: 27.97 AUTO:00:06:00
CON GRMS: 27.37 TOTL:00:06:30
STATUS: Finished
LEVEL : 0.0dB
CHAN SEQ:1
G²/Hz
10¹
10⁰
10⁻¹
10⁻²
10⁻³
10
20
50
100
200
500
1k
2k
P/N NSI-2
S/N NOTED
PLOT #4
CONTROL @ -260°F
Y-AXIS

PLOT #5

TEST SETUP ID: ROBRES2 TEST RUN NAME : Z-AXIS@-260F

P/N NSI-2 S/N NOTRP

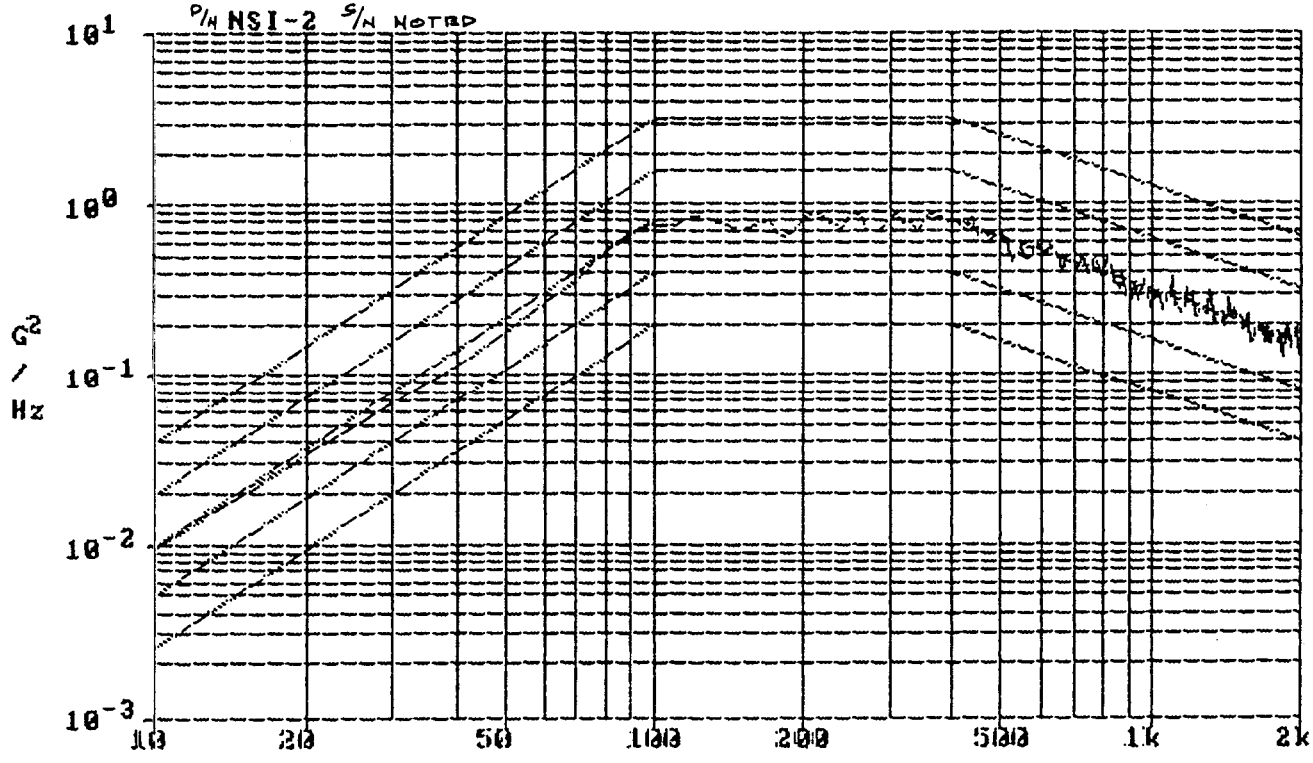

02/12/88
18:17:03
DISPLAY
C-CON
A-CHAN1
D-DRIVE
H-DR/CT
^A-1/CT

10mV/g
DOF= 154
LNS= 250
RES=10.0
LIM=3.0σ
FIXED BW

REF GRMS: 27.97 AUTO:00000:05:59STATUS: Finished /

CON GRMS:27.492 TOTL:00000:06:29LEVEL : 0.0 dB CHAN SEQ:1

CONTROL @ -260°F

Z-AXIS

ROBERTS RESEARCH LABORATORY

RANDOM VIBRATION TEST (-65° F)

This test was performed to insure that units meet the requirements of Statement of Work Paragraph 2.2.1.3.1.

Date: February 12, 1988

Serial Numbers: A1-A2, B1-B10, C1-C10, D1-D10, E1-E2, F1-F4

Method:

Units were subjected to random vibration at -65° F in three orthogonal axes according to the schedule described in the attached test report.

Results:

There was no evidence of degradation.

Equipment:

See attached test report 533-8201 from National Technical Systems.

RRL Quality Assurance Linda Corbin-Nolan RRL AJ

Chief Engineer A B Roberts

ROBERTS RESEARCH LABORATORY

RANDOM VIBRATION TEST (-260° F)

This test was performed to insure that units meet the requirements of Statement of Work Paragraph 2.2.1.3.2.

Date: February 12, 1988

Serial Numbers: A1-A2, B1-B10, C1-C10, D1-D8, E1-E2, F1-F4

Method:

Units were subjected to random vibration at -260° F in three orthogonal axes according to the schedule described in the attached test report.

Results:

There was no evidence of degradation.

Equipment:

See attached test report 533-8201 from National Technical Systems.

RRL Quality Assurance Linda Leorbia-Roberts RRL A1

Chief Engineer A S Roberts

ROBERTS RESEARCH LABORATORY

HUMIDITY

Because the units contain a pyrotechnic mixture of a zirconium/potassium perchlorate type, the humidity test described in Paragraph 2.2.1.4 of the Statement of Work is not required.

FIRING TESTS (AMBIENT)

These tests were performed to insure that units meet the requirements of Statement of Work Paragraph 4.1.2.

Date: February 16, 1988

Serial Numbers: A1-A2

Method:

Unit was placed in NASA 10 cc. bomb and soaked at ambient temperature until five minutes after attached thermocouple reached 70° F. Unit was then fired and time from application of electrical power to pressure reaching 525 PSI was recorded. Peak pressure and time from application of power to peak pressure were also recorded.

Results:

SERIAL NUMBER	SOURCE AND POWER APPLIED	TIME TO 525 PSI (μ s.)	PEAK PRESSURE (PSI)	TIME TO PEAK PRESSURE (μ s.)
A1	C. C. - 3.5 A	875	598	1,010
A2	C. C. - 20 V	250	539	270

C. C. = constant current mode
C. D. = capacitor discharge mode

Equipment:

10 cc. Bomb per SEB 2610021 "D"
Pressure Transducer Kistler Model 601B2
Dual Mode Amplifier Kistler Model 504E4
Oscilloscope Nicolet Model 4094
NASA Standard Firing Unit
Hewlett Packard Plotter Model 7470A

Tested by _____

RRL Quality Assurance _____ RRL QA

Chief Engineer _____

ROBERTS RESEARCH LABORATORY

FIRING TESTS (-260° F)

These tests were performed to insure that units meet the requirements of Statement of Work Paragraph 4.1.3.

Date: February 17, 1988

Serial Numbers: B1-B10

Method:

Unit was placed in 10 cc. bomb and soaked at temperature at -260° F until five minutes after the thermocouple reached -260° F. Unit was then fired and time from application of power to pressure reaching 525 PSI was recorded. Peak pressure and time from application of power to peak pressure were also recorded.

Results:

SERIAL NUMBER	SOURCE AND POWER APPLIED	TIME TO 525 PSI (µs.)	PEAK PRESSURE (PSI)	TIME TO PEAK PRESSURE (µs.)
B1	C. C. - 5 A	550	829	635
B2	C. C. - 5 A	610	822	660
B3	C. C. - 5 A	485	878	540
B4	C. C. - 22 A	140	624	395
B5	C. C. - 22 A	135	746	240
B6	C. D. - 20 V	135	859	180
B7	C. D. - 20 V	695	871	745
B8	C. D. - 20 V	305	862	355
B9	C. D. - 40 V	235	935	335
B10	C. D. - 40 V	435	907	480

C. C. = constant current mode
C. D. = capacitor discharge mode

Equipment:

10 cc. Bomb per SEB 2610021 "D"
Pressure Transducer Kistler Model 6018Z
Dual Mode Amplifier Kistler Model 504E4
Oscilloscope Nicolet Model 4094
NASA Standard Firing Unit
Hewlett Packard Plotter Model 7470A

Tested by D Roberts

RRL Quality Assurance Linda Carbin-Roberts RRL A1

Chief Engineer D S Roberts

ROBERTS RESEARCH LABORATORY

FIRING TESTS (+300° F.)

These tests were performed to insure units meet requirements of Statement of Work Paragraph 4.1.4.

Date: February 19, 1988

Serial Numbers: C1-C10

Method:

Unit was placed in 10 cc bomb and soaked at a temperature of +300° F. until five minutes after thermocouple reached +300° F. Unit was then fired and time from application of electrical power to pressure reaching 525 PSI was recorded. Peak pressure and time from application of power to peak pressure was also recorded.

Results:

SERIAL NUMBER	SOURCE AND POWER APPLIED	TIME TO 525 PSI (µs.)	PEAK PRESSURE (PSI)	TIME TO PEAK PRESSURE (µs.)
C1	C. C. - 3.5 A	*905	456	905
C2	C. C. - 3.5 A	*870	455	870
C3	C. C. - 3.5 A	*1,160	459	1,160
C4	C. C. - 22 A	275	763	300
C5	C. C. - 22 A	*425	419	425
C6	C. D. - 20 V	*500	473	500
C7	C. D. - 20 V	*360	512	360
C8	C. D. - 20 V	*450	447	450
C9	C. D. - 40 V	*305	509	305
C10	C. D. - 40 V	*300	493	300

C.C. = constant current mode
C.D. = capacitor discharge mode

* See discussion of test results.

Equipment:

10 cc. Bomb per SEB 2610021 "D"
Pressure Transducer Kistler Model 601B2
Dual Mode Amplifier Kistler Model 504E4
Oscilloscope Nicolet 4094
NASA Standard Firing Unit
Hewlett Packard Plotter 7470A

Tested by D. Roberts

RRL Quality Assurance Linda Carlin-Roberts

Chief Engineer A. C. Roberts

ROBERTS RESEARCH LABORATORY

DISCUSSION OF TEST RESULTS

The Roberts Research Laboratory NSI-2 performed very well in the environmental and performance tests required by the Statement of Work. There are two matters, however, which require explanantion.

After NASA returned two units from the -450° F detonator shock tests performed in accordance with Paragraph 2.2.1.2.2, the units were disassembled and examined. One unit had a broken bridge circuit and was not functioned. The other failed to function in constant current mode.

Upon careful disassembly and dissolving out of the base charge with acetone by ultrasonic methods, we found that the silicone binder primer composition was intact and rigidly bonded to the base of the charge cup.

We concluded, based upon our examination, that the primer composition did withstand -450° F detonator shock and remained tenaciously affixed to the deposited bridge and charge cup.

On the unit with the broken bridge, the large diameter thin wall glass seal between the charge cup and body was very poor and was not truly bonded to the charge cup. This was caused by using a glass that had a higher fusing point than the remainder of the glass beads used (i. e.: the pin to body glass seal).

The glass beads of the proper composition, the one we wished to use, were drawn to an incorrect size, so we temporarily substituted KG-12 glass beads drawn to the correct size so that we might finish the project as quickly as possible.

The other problem involved gross errors in pressure readings on units fired at high and low temperatures. We mistakenly torqued the Kistler pressure transducer adaptor into the pressure bomb at the same torque we used to seal the pressure transducer into the adaptor (25 inch pounds). The torque on the adaptor to bomb connection should have been 125 inch pounds. This resulted in undetected leaks in shots at both high and low temperatures.

Inasmuch as the output material (zirconium and potassium perchlorate) produces very little gas but very high temperatures, the peak pressure in the bomb is highly dependent upon the quantity of gas in the bomb at the time of firing. At the low temperatures (-260° F), the pressure in the bomb dropped below atmospheric pressure and outside air leaked in, giving approximately 2.65 times as much air in the bomb as is present at 70° F. This resulted in an average pressure reading of approximately 850 PSI instead of 650 PSI.

In the case of the high temperature units (+300° F), the pressure in the bomb went up as a result of gas expansion and leaked out, giving approximately 70% as much air in the bomb as is present at 70° F. Therefore, when the NSI-2 functioned, the resulting pressure measurements were approximately 450 PSI instead of the anticipated 650 PSI.

There are some exceptions. Test units B4 and B5 were fired at -260° F at 22 amps. Due to the relatively high voltage used to stabilize the 22 amp constant current, an electric arc formed between pin and charge cup and between charge cup and initiator ground (or body), causing what appears to be a ground loop. This caused the pressure transducer to read a lower pressure. This was tested and proved by purposely putting electrical potential to the bomb. Test units B9 and B10, fired at 40 volts capacity discharge, did somewhat the same thing but in the opposite direction.

Test unit C4, fired at +300° F and 22 amps constant current, did the same thing for the same reason, except that the pressure reading went up instead of down.

This arcing shows up in the time pressure curves. we would hve expected unit C5 to do the same thing as unit C4 but it did not for unknown reasons.

FINAL STATUS AND RECOMMENDED ACTIONS

We have developed a unit which meets all the requirements of the Statement of Work; however, the units tested had a very poor glass-to-metal seal between body and charge cup. This was because we considered it relatively unimportant and used an available, on-hand glass tube of KG-12 glass. The KG-12 tubes did not seal well at the temperatures required for the other glass-to-metal seals. We should have had a different glass tube drawn but it would have entailed making ten pounds of glass and sending it to an outside manufacturer to be drawn into tubing and cut to length with an additional two to three weeks delay.

Because of the poor seals, detonation shock at -450° F moved the charge cup approximately 0.003" and damaged the bridge on one unit to the extent of completely opening the circuit and damaged another sufficiently to decrease the contact with the pin to the point that the unit did not function at -450° F. A proper glass seal would have prevented this problem. It should be noted, however, that the slurried primer composition remained tenaciously bonded to the bridge and charge cup after detonator shock at -450° F.

However, our analysis of the data we obtained during verification and from further testing, we now feel certain we should have had only one bridge area instead of, in effect, two bridges in series. The rather high coefficient of thermal resistivity of titanium resulted in very low bridge resistance at -450° F which meant that very little of the input electrical power was dissipated in the bridge film, particularly at 20 volt capacity discharge. Most of the power was dissipated in the switch contacts of the firing box and in the lead wires.

Had we used a single bridge with one pin welded directly to the charge cup, we would have obtained four times the power per unit thickness in the brdige that we obtained when we tested the verification units at -450° F.

This would give certainty of firing in a few hundred microseconds at -450° F. The disadvantage is that it would increase power dissipated by a factor of 4 at +300° F in the no-fire, 1 watt, 1 amp condition. Our tests show the single titanium bridge is not capable of dissipating this power for five minutes without firing.

In analyzing the power dissipated at 3.5 amps at -450° F, +70° F and +300° F and at 1 amp at +300° F, we obtained the results shown in Table I.

TABLE I

CALCULATED POWER DISSIPATION PER UNIT THICKNESS IN BRIDGE FILM

	TITANIUM WATTS K^{-1}	STAINLESS 304 WATTS K^{-1}	INCONEL 600 WATTS K^{-1}	NICROME V WATTS K^{-1}
DOUBLE BRIDGE IN SERIES 3.5 A				
-450° F	0.392	1.232	1.205	1.148
+70° F	3.063	1.692	1.250	1.191
+300° F	4.637	1.895	1.270	1.210
SINGLE BRIDGE 3.5 A				
-450° F	1.568	4.948	4.820	4.593
+70° F	12.250	6.806	5.000	4.765
+300° F	18.547	7.622	5.079	4.840
DOUBLE BRIDGE IN SERIES 1 A - NO FIRE				
+300° F	0.3785	0.1547	0.1037	0.0988
SINGLE BRIDGE 1 A - NO FIRE				
+300° F	1.5140	0.6222	0.4146	0.3951

NOTE: $K^{-1} = \frac{1}{\text{CONSTANT}}$

In order of desirability, the Nichrome V gives almost constant power dissipation from -450° F to +300° F at 3.5 amps. Other than titanium, it gives the lowest power per unit thickness of the materials tested at +300° F, no fire.

For the unit to function properly, the bridge must be of a certain thickness. If it is less than that thickness, there will be insufficient energy per unit area to initiate primer composition. If the bridge is too thick, it will not respond quickly enough to meet the initiating time requirements. This thickness in our configuration appears to be around 6000 to 9000 Å. That was the thickness used to calculate Table I.

From Table I, it appears we must have at least 1.25 watts times K^{-1} of power per unit thickness for high reliability. For a good margin of safety, 4 to 5 watts times K^{-1} is desirable. Using titanium, the double bridge in series has a calculated power dissipation of 0.392 which means the unit is unlikely to fire at 20 volts capacity discharge at -450° F; in fact, one of the verification units failed to fire under those circumstances. From Table I, it is evident that none of the four materials (titanium, 304 stainless steel, Inconel 600 and Nicrome V) give sufficient energy to reliably ignite at -450° F when used as a double bridge in series.

On the single bridge system, it is apparent that the titanium would just be slightly above marginal in performance. The 304 stainless steel, Inconel 600 and Nicrome V would all function very reliably with a superior safety margin.

The other aspect which must be considered is the bridge at 1 amp, 1 watt and +300° F. In the double bridge in series configuration at +300° and 1 amp, power dissipation was 0.3785; this was tested in over 100 units and worked very nicely. The 304 stainless steel, Inconel 600 and Nicrome V in double bridge configuration are all considerably lower than titanium and would pass the no-fire requirements without difficulty.

In the single bridge configuration at 1 amp, no-fire and +300° F, the titanium was 1.514. This is too high and fires approximately 70% of the time. The 304 stainless steel, Inconel 600 and Nicrome V are low enough to pass the no-fire requirement. However, the Nicrome V has the largest margin of safety with Inconel 600 next.

Our conclusions are that the 304 stainless steel, Inconel 600 and Nicrome V will all work very well over a temperature range of -450° F to +300° F. The preferred material for the bridge would be Inconel 600 or Nicrome V. We have, however, had considerable experience with

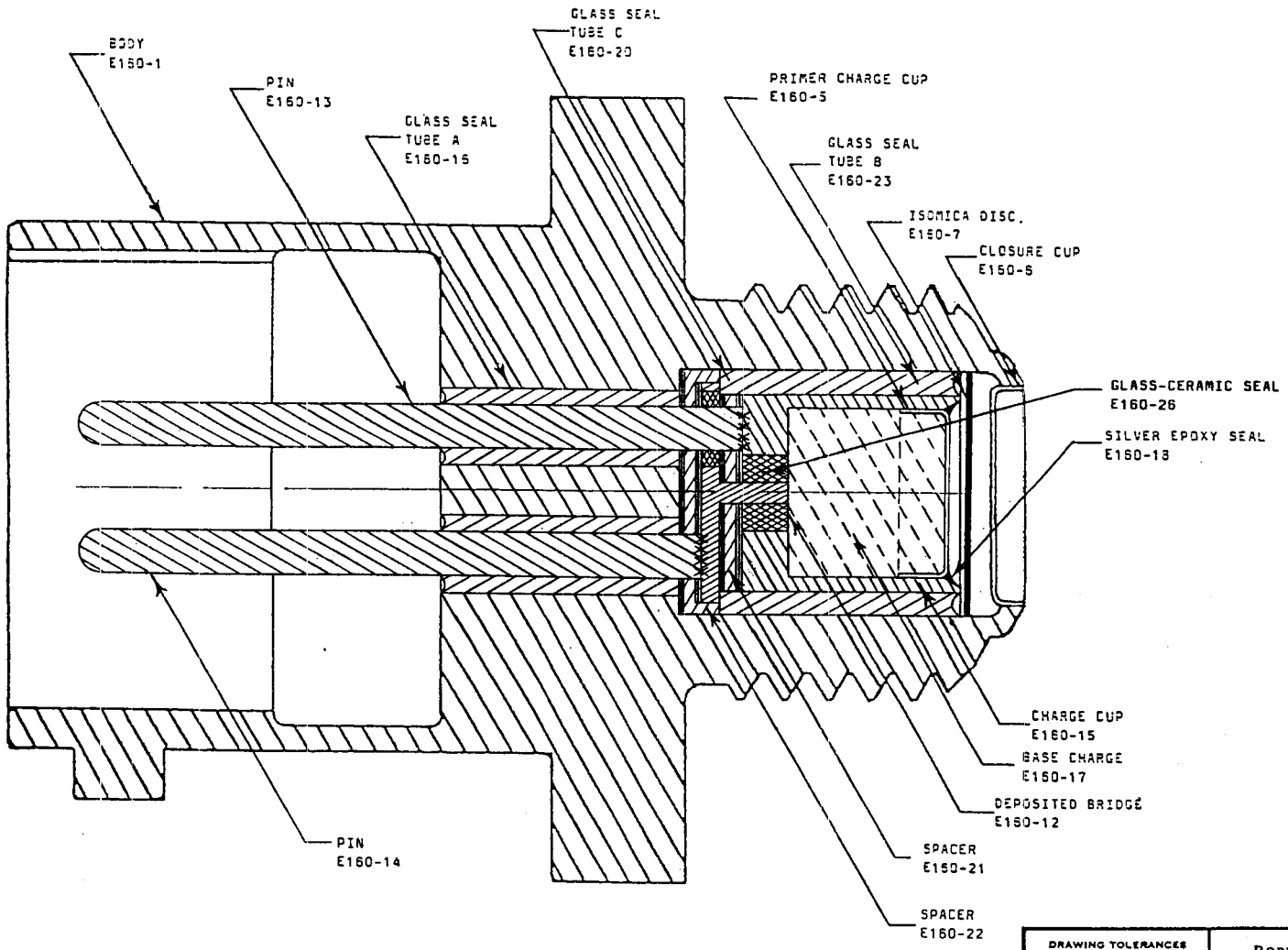

DRAWING TOLERANCES UNLESS OTHERWISE SPECIFIED DEC. ± ANGLES ± DEG. CONCENTRICITY T.I.R. FINISH R.M.S.	ROBERTS RESEARCH LABORATORY 23150 KASHIWA COURT TORRANCE, CALIFORNIA 90505-4027	
	DRAWN BY: ASR	SCALE: 10/1
	APPROVED BY: ASR	DATE: 2/4/88
NSI - 2		DRAWING NUMBER C160-22

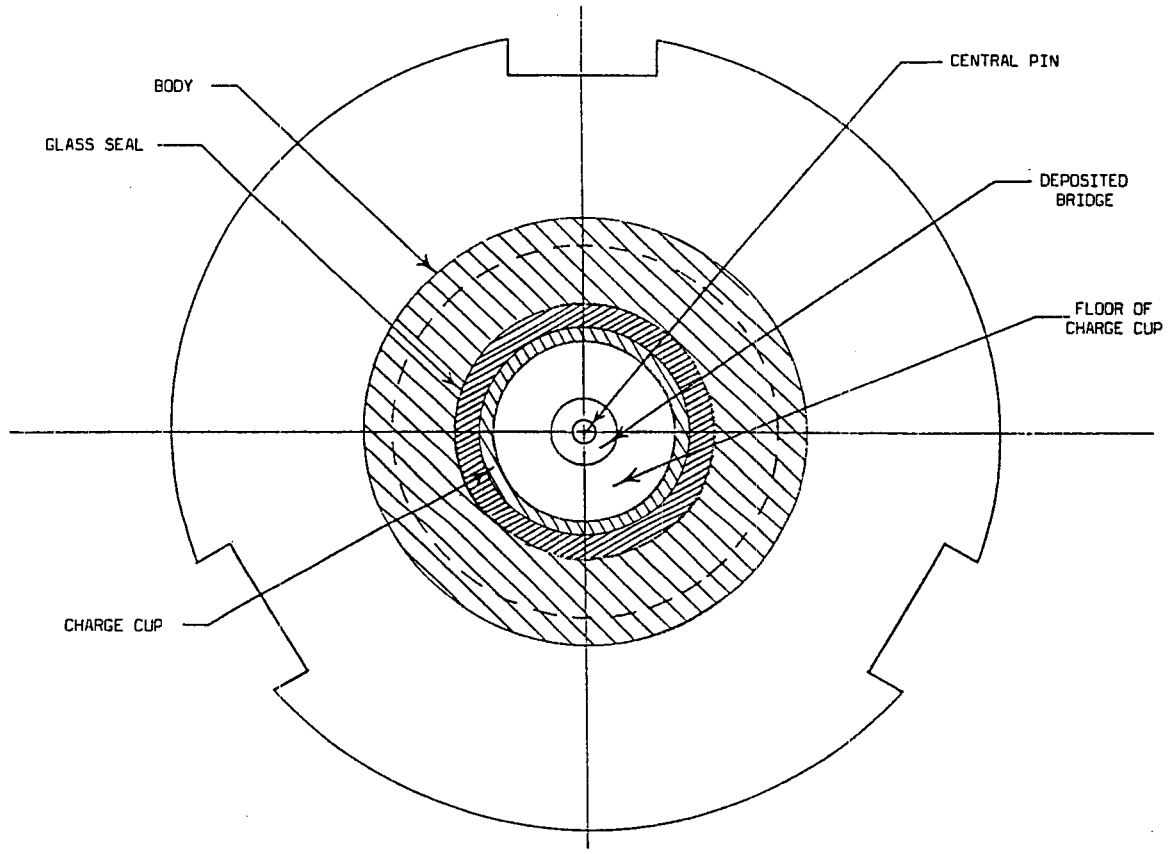

SECTION BB

VIEW WITH PRIMER AND BASE CHARGE REMOVED

ORIGINAL PAGE IS
OF POOR QUALITY

DRAWING TOLERANCES UNLESS OTHERWISE SPECIFIED DEC. ±_____ ANGLES ±_____ DEG. CONCENTRIC _____ T.I.R. FINISH _____ R.M.S.	ROBERTS RESEARCH LABORATORY 23150 KASHIWA COURT TORRANCE, CALIFORNIA 90505-4027	
	DRAWN BY: ACR	SCALE:
	APPROVED BY: ACR	DATE: 5/9/88
DEPOSITED BRIDGE LOCATION		DRAWING NUMBER D160-6

the 304 stainless steel bridge; it is quite easy to handle.

We wish to recommend a combination of improvements to the NSI-2 as shown in Drawing C160-22. In this, we have altered the design to have one circular bridge film, concentric with the initiator body. This offers many advantages.

First, we can reduce the charge cup outside diameter and thereby increase wall thickness of the glass tube that seals primer charge cup to body. Because of the parts tolerances, this greatly increases the percentage fill of the cavity by the glass pre-form, reducing the possibility of voids and making the glass-to-metal seal much stronger and easier to manufacture.

By having a centerline glass-to-metal seal on which the bridge is deposited, grinding its surface is much easier and we have far less smearing of the metal of the primer charge cup and the central pin over the glass. This was the primary problem with the design used in verification testing.

The glass ceramic between the central contact and the primer charge cup is sealed by heating the unit with a pre-form in place to the working point of the glass ceramic material. It is removed from the furnace and pressed in place at relatively high pressures, holding until the material has dropped below its softening point. This eliminates voids and insures a good glass-to-metal seal between the central contact and primer charge cup, as well as between the central contact and body and by spacer (E160-21) and spacer (E160-22).

The sealing system uses discs consisting of a thin layer of glass, a slightly thicker layer of crystallized glass ceramic and another thin layer of glass. This causes the system to put the glass-to-metal seal junction in compression, rather than in shear during high pressure exposure (40,000 PSI); the result is a much stronger and more reliable glass-to-metal seal. In the area between this seal (Spacer E160-22) and the forward portion of the connector cavity, the disc sealing system allows sufficient room to insert a 1.4 microfarad ceramic discoidal capacitor and two ferrite beads. This would give us EMI/RFI filter protection with a minimum insertion loss (dB) per MIL-STD-220 as show in the following chart:

MINIMUM INSERTION LOSS (dB) PER MIL-STD-220

75 kHz	150 kHz	300 kHz	1 MHz	10 MHz	1 GHz
18	28	33	44	60	70

We realize that EMI/RFI protection is not currently required in this design. However, an increasing number of aerospace and military applications are requiring EMI/RFI filters.

We believe we have accomplished the tasks required by the contract. While the design used in verification testing meets the requirements of the Statement of Work, our recommended design offers even more advantages. We will be sending five units manufactured in accordance with Drawing C160-22, incorporating these improvements, to NASA for evaluation at -450° F.