D-54
304453

NASA Technical Memorandum 89114

SHUTTLE TO SHUTTLE II: SUBSYSTEM WEIGHT REDUCTION POTENTIAL

(Estimated 1992 Technology Readiness Date)

(NASA-TM-89114) SHUTTLE TO SHUTTLE 2: SUBSYSTEM WEIGHT REDUCTION POTENTIAL (ESTIMATED 1992 TECHNOLOGY READINESS DATE) (NASA) 54 p CSCL 22B
N90-28589
Unclas
G3/16 0304453

Ian O. MacConochie

May 1988

Date for general release May 31, 1990

National Aeronautics and Space Administration

Langley Research Center
Hampton, Virginia 23665

TABLE OF CONTENTS

	Page
Introduction	2
Subsystems	3
1.0 Wing Group	3
2.0 Tail Group	9
3.0 Body Group	12
4.0 Thermal Protection System	22
5.0 Landing and Auxiliary Systems	29
6.0 Propulsion - Ascent	30
7.0 Reaction Control System (RCS)	33
8.0 Orbital Maneuvering System (OMS)	33
9.0 Prime Power	34
10.0 Electrical Conversion and Distribution	36
11.0 Hydraulic Conversion and Distribution	37
12.0 Surface Controls	38
13.0 Avionics	40
14.0 Environmental Control and Life Support	42
15.0 Personnel Provisions	43
Discussion	
Table I: Summary of Technology Factors	49
Table II: Summary of Configuration Factors	50
Summary	51

Explanatory Note

This document has been prepared in support of an in-house study of an advanced Shuttle, referred to herein as Shuttle II. The following sections are numbered by subsystem with the same numbering system used for the current Shuttle in reporting mass properties. This numbering system is, in turn, patterned after MIL spec 38310 used for reporting mass properties in the aerospace and aircraft industries. Figures accompany each section and are designed as figures 1.1, 1.2, etc. References are similarly numbered. As an exception to the above numbering system, figures accompanying the discussion section are designated D-1, D-2, etc.

Introduction

The current Space Shuttle has considerable capability with regard to the crew size, the length of orbital stay time, and the payload support provided. The technology level that supported the development of this capability is that associated with the seventies and earlier; additional (advanced) technologies available at the time of the vehicle design were not utilized for cost reasons. All of these factors tend to make the Shuttle system large.

The NASA Langley Research Center has been conducting studies to determine the impact of advanced technologies on the next generation Space Shuttle (Shuttle II). This vehicle is envisioned to be manned and to have a 20,000- to 40,000-lb payload capability. A containerized cargo system is used with the container mounted on top of the vehicle. Most of the support requirements for the payload are charged to payload accommodation and do not appear in the basic vehicle dry weight.

In the following sections, current Shuttle subsystems are identified, and estimates for weight reduction potential for the advanced (Shuttle II) subsystems are given. The weight savings, or reduction, for each Shuttle II subsystem is expressed as a percent of the corresponding Shuttle Orbiter subsystem weight. These weight savings projections have been compiled as an aid for those involved in weight estimation of future shuttles.

Weight reductions are classified as technological or configurational. Technology weight savings are those obtained from advances in the state-of-the-art, for example, by substituting an advanced material for a current Shuttle material or by using Shuttle flight experience to better define the aerodynamic and aerodynamic-heating environments. Configuration factors are those associated with a reduction in vehicle weight such as reducing crew cabin size or shortening the mission.

Most combined savings applied to a single subsystem are not additive. For example, if an aerodynamic control surface is reduced in physical size through control configured design by 20 percent and then by 30 percent by using advanced materials, the resulting savings is not 50 percent but

$$[1-(1-.20)(1-.30)]\ 100 = 44 \text{ percent.}$$

As an additional example, if 52 percent of the body structure (this excludes main propellant tanks) can be converted to composites at 32 percent savings and the body structure constitutes 31 percent of the vehicle insertion weight, the overall savings at insertions is

$$(.52)(.34)(.31) = .052 \text{ or } 5.2 \text{ percent.}$$

A factor that does not appear in the tabulated figures for subsystem weight savings is the impact of one subsystem upon another. The two major factors that can dramatically impact the weight of other subsystems are power and cooling demand. Subsystem volume requirements have little impact on overall vehicle weight since there is enough unused volume for the subsystems. The exceptions are payload shape and volume, which can dramatically affect vehicle size and weight.

Subsystems

1.0 Wing Group

Aluminum skin-stringer, aluminum honeycomb, and some composite structures are being used on the current Shuttle wing. Mechanical fasteners are used for joints. An advanced structural wing, however, could be fabricated entirely from high strength organic or metallic composites, titanium, advanced aluminum, or high temperature superalloys. Bonding (as opposed to fastening) could be utilized particularly on the organic composites for a substantial weight savings.

With regard to the structural concept for an advanced wing, the entire upper and lower surfaces could be constructed from a honeycomb sandwich with a probable weight advantage. At present, a large section of the wing surface on the Shuttle Orbiter is made from aluminum honeycomb with the elevon hingeline seals made either from Inconel or titanium honeycomb sandwich, and the elevons made from aluminum honeycomb sandwich--the latter protected with reusable surface insulation (Fig. 1.1).

From the standpoint of wing internals, a wing was proposed in Reference 1.1 in which only two ribs and two spars (one leading edge and one trailing edge spar) were utilized (Fig. 1.2). A static loads analysis, using a finite element program, showed that the wing could withstand the ultimate loading condition with about a 10-percent margin over the 2.5g subsonic maneuver requirement. A factor that enhances the feasibility of the much reduced internal structure for the advanced Shuttle-type wings is the large difference in wing thickness of the clipped delta configurations compared with, for instance, a modern fighter aircraft. The latter wing thickness is that associated with a 3 to 7 percent chord as compared with a 10 to 12 percent chord used for the Shuttle-type vehicles.

By combining honeycomb, bonding for fasteners, and advanced structural concepts such as that suggested in Reference 1.1, a combined savings in wing weight of 44 percent is projected. In addition, a 20-percent reduction in wing area is projected through the application of control configured design (Ref. 1.2). More accurate air data systems should make control configured design possible with somewhat greater relaxation in stability levels (Ref. 1.3).

The assumption of a weight savings through the use of honeycomb is based on data showing honeycomb as the most efficient structure for carrying in-plane compressive loads (Ref. 1.4 and Fig. 1.3). The $\bar{t}$ value represents the equivalent solid thickness of the panel in inches, and R equals panel radius of curvature in inches. The load, N, is given in pounds per inch of circumference. The E is the modulus of the material in pounds per square inch.The tubular structure shown does not qualify as the lightest in an integrated wing design, since the surface is corrugated. Fairings, or carrier panels, would be required for installation of reusable surface insulation and would constitute a weight addition.

Wing Weight Savings Summary

Item	Projected Savings, %	Classification
Materials and Construction - - - - - - - - - - - - - - -	44	Technology
Composites for aluminum, bonding for fasteners, honeycomb for skin-stringer construction - - - - - - - - (30)		
Elimination of wing internals with exception of forward and aft spars and root and wing tip ribs - - - - - - - - (20)		
Control Configured Design - - - - - - - - - - - - - - (allowing for reduced wing area)	20	Configuration

1.1 MacConochie, I. O., LeMessurier, R. W., and Bailey, J. P.: "Large Delta Wings for Earth-to-Orbit Transports," Journal of Spacecraft and Rockets, Vol. 17, No. 5, September-October 1980.

1.2 Freeman, Delma C., Jr. and Wilhite, Alan W.: "Effects of Relaxed Static Longitudinal Stability on a Single-Stage-to-Orbit Vehicle Design" NASA TP 1594, December 1979.

1.3 Pruett, C. D., Wolf, H., Heck, M. L., and Siemers, P. M., III: "Innovative Air Data System for the Space Shuttle Orbiter," Journal of Spacecraft and Rockets, Vol. 20, No. 1, January-February, 1983.

1.4 Shideler, J. L., Anderson, M. S., and Jackson, L. R.: "Optimum Mass-Strength Analysis for Orthographic Ring-Stiffened Cylinders Under Axial Compression" NASA TN D-6772, July 1972.

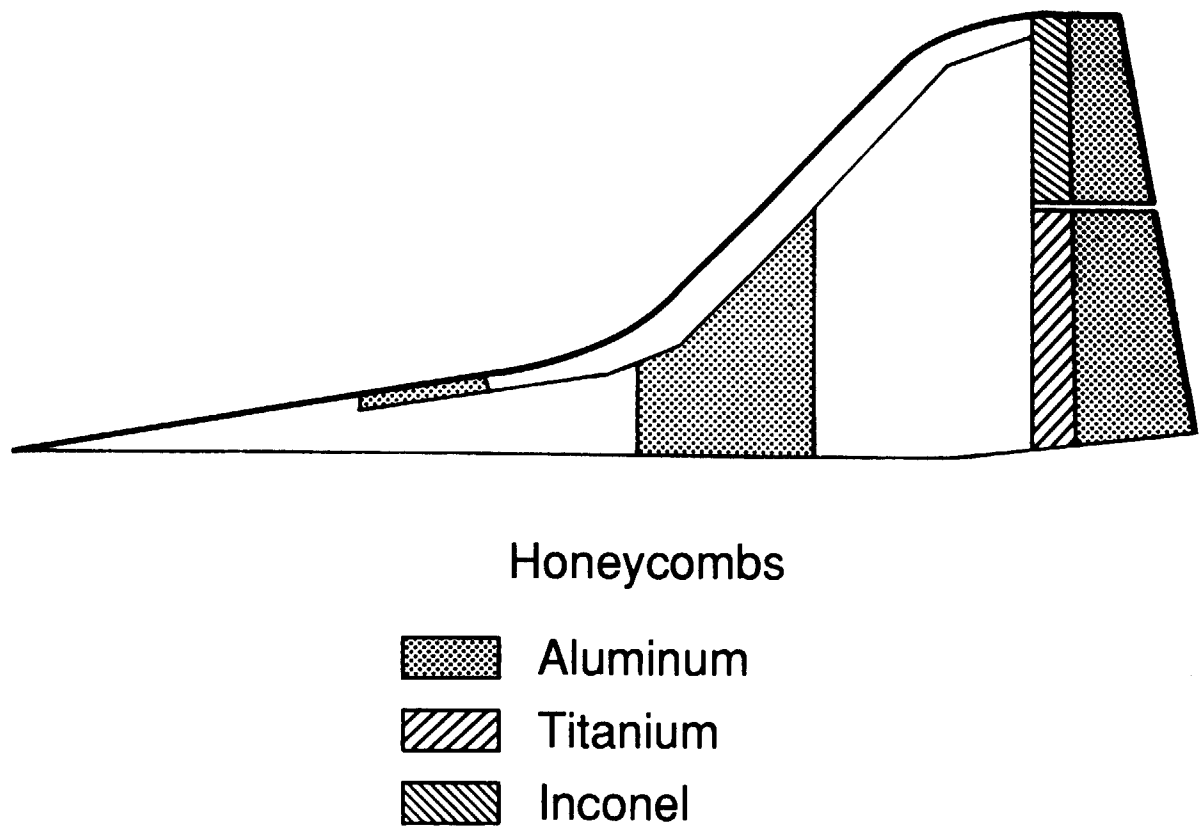

Figure 1.1 Shuttle Orbiter wing honeycomb usage.

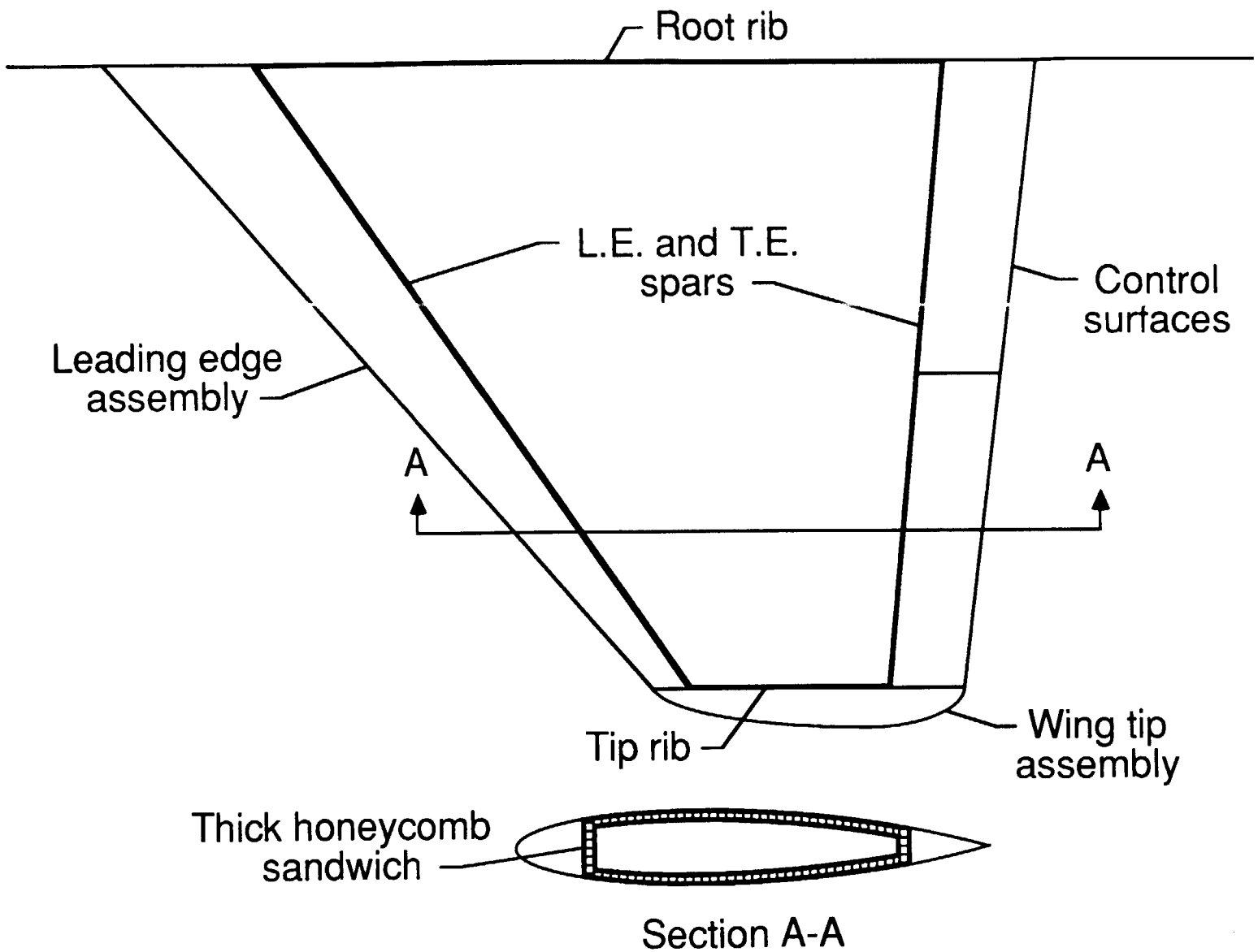

Figure 1.2 Advanced honeycomb sandwich wing construction.

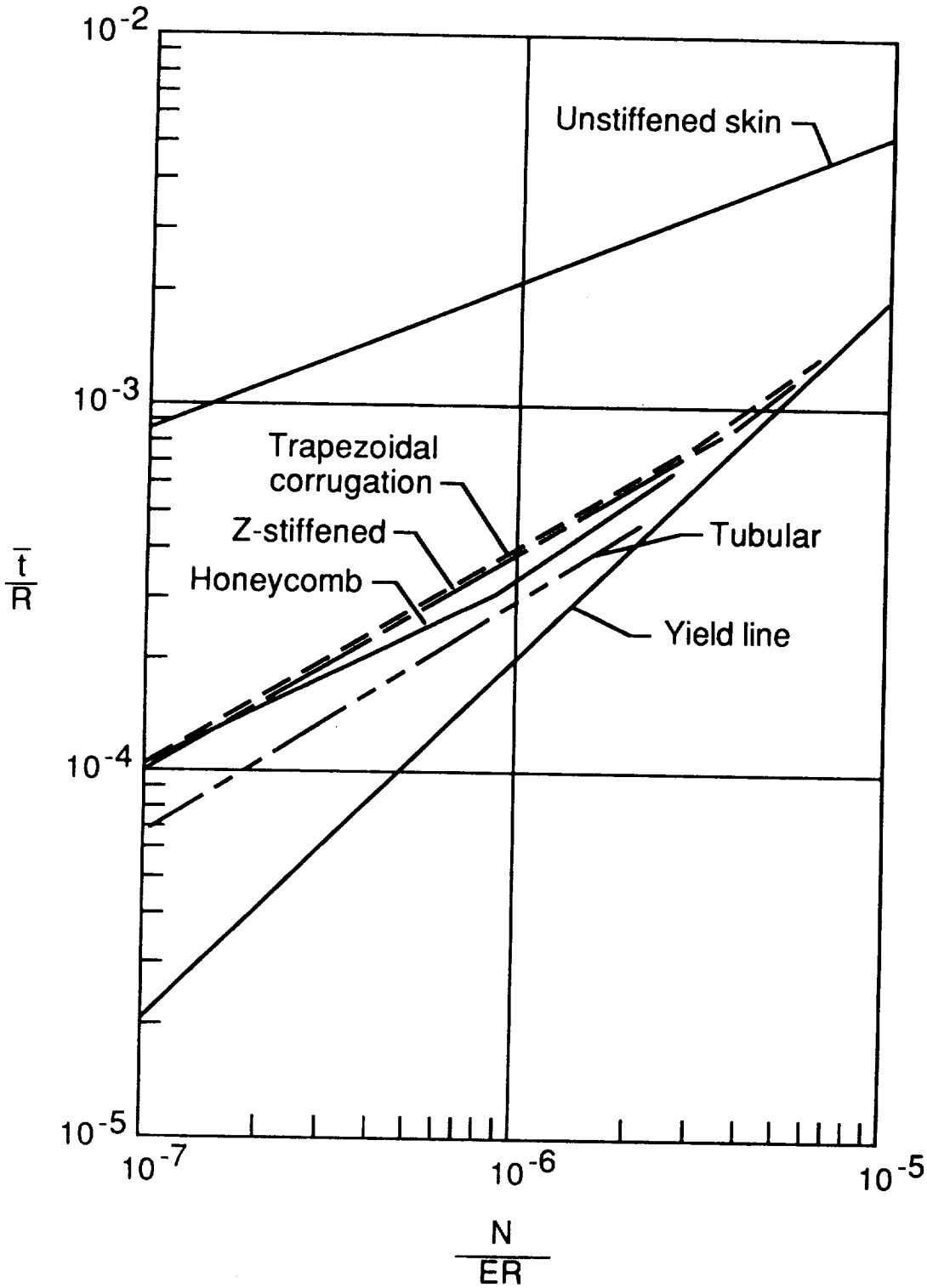

Figure 1.3 Wall construction weight comparisons.

2.0 Tail Group

The current Shuttle Orbiter tail consists of aluminum skin-stringer construction for the fin with aluminum honeycomb covers for the rudder hingeline seals (Fig. 2.1). Spars are machined and ribs are fabricated from aluminum sheet metal.

By using a concept similar to that proposed for the advanced wing (Fig. 1.2) for the vertical tail, a weight savings is projected. Also by utilizing a forward-located fin, referred to as a dorsal (Ref. 2.1), or tip fins (Ref. 2.2) and using active controls, the size and weight of the devices used for directional control can be dramatically decreased. If tip fin controllers are utilized during entry in lieu of a large vertical tail, the use of reaction control system (RCS) jets for yaw control can be discontinued earlier in the flight ($M \approx 3$). The present Orbiter uses the RCS system down to about Mach 1 (Ref. 2.2).

The secondary effect on the RCS system of reduced RCS propellant is not included in the figures below. This could amount to about a 200-pound savings in RCS propellant for a vehicle having an entry weight of 300,000 pounds. Also not included is a reduction in overall system weight derived from the reduced ascent drag and reduced requirements on the actuation and power subsystems for the much smaller tip fins or dorsal.

Tail Weight Savings Summary

Item	Projected Savings, %	Classification
Similar material and construction to that of the advanced wing	44	Technology
Materials (30)		
Construction (20)		
Dorsal or tip fin controllers in lieu of tail	40* to 70	Configuration

*Based on estimates from size of dorsal and actuator power required compared to a vertical tail in reference 2.1. For tip fins, estimated savings is based on data presented to JSC Shuttle program management on LaRC Tip-Fin Controller Study on September 28, 1983. An estimate is made for the weight penalty required for separate speed brakes when using a dorsal.

2.1 Lepsch, R. A. and MacConochie, I. O.: "Subsonic Aerodynamic Characteristics of a Circular Body Earth-to-Orbit Transport." Presented at the AIAA 4th Applied Aerodynamics Conference, San Diego, California. Paper No. AIAA 86-1801-CP, June 9-11, 1986.

2.2 Powell, R. W. and Freeman, D. C., Jr.: "Aerodynamic Control of the Space Shuttle Orbiter with Tip-Fin Controllers." Journal of Spacecraft and Rockets, Vol. 22, No. 5, September-October 1985.

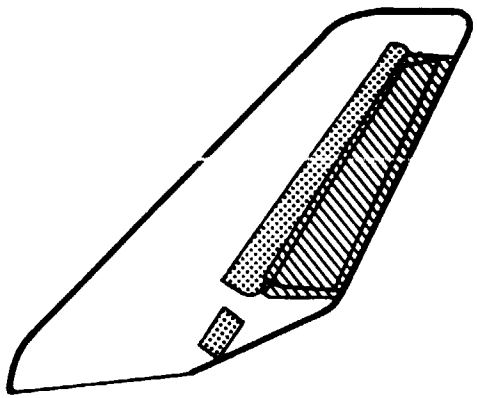

Honeycombs

Aluminum

Inconel

Figure 2.1 Shuttle tail honeycomb usage.

3.0 Body Group

The structural material in the current Shuttle Orbiter body is primarily aluminum. Conventional skin-stringer construction is used extensively throughout. Some components, such as the crew module shell, are integrally stiffened using sections from thick machined aluminum plates. Organic composite honeycomb sandwich is used for the cargo bay doors, and super alloy honeycomb sandwich is used for the base close-outs around the engines. A section of the sides of the body along the wings is aluminum honeycomb (Fig. 3.1). Portions of the engine thrust structure and other body truss structure are fabricated from metallic composites. By necessity, the overall body structure on the Shuttle Orbiter is complex when compared with a vehicle having large internal tanks and large areas with fewer cutouts. The current Shuttle has approximately 60 cutouts for access and vent panels and other penetrations (Ref. 3.1 and Fig. 3.2). Also, discontinuities are present in the body moldline for the pilot's canopy and for the orbital maneuvering system (OMS) pods. These cutouts and discontinuities constitute substantial structural and thermal protection system (TPS) weight penalities. (Note: TPS is usually densified around a cutout.) Every effort should be made to reduce, if possible, the number of penetrations in the body shell for the considerations given above. For operational considerations, increased access is usually sought, not decreased, making it desirable to establish a trade between an extra pound of structure in orbit versus a unit of time saved on the ground for operations.

One of the biggest drivers in structural weight for future Earth-to-orbit transports is the overall body shape. By using a simple circular shape, a savings of 40 to 60 percent is easily achievable through the reduction in body shell wetted area and unit weight over an oblate cross section (Fig. 3.3 and Ref. 3.2). Conceivably, the entire body shell, could be fabricated from honeycomb sandwich and overwrapped with composites. Straight pultruded composite sections could be used where needed for cargo bay door frames and cargo support structure (Refs. 3.3 and 3.4).

In a recent contractual study, an estimate was made of the possible savings from substituting composites for aluminum in the fuselage of large transport aircraft (Ref. 3.5). In accordance with the study guidelines, cabin window spacing could not be changed; therefore, optimum ringframe structure could not be achieved. Damage tolerance of the exposed face sheet of the honeycomb sandwich dictated the face sheet thickness. Even with design constraints, the projected savings in the body shell for the transport was 22.7 percent when substituting graphite-epoxy composites for aluminum.

In addition to providing protection for an advanced Shuttle during severe entry heating, the thermal protection system would also protect a honeycomb sandwich fabricated from ultra-thin face sheets from casual damage. Presumably, the interior face sheet could be protected from damage during manufacture. In view of the casual damage and non-optimum constraints of the commercial airplane study, an additional 9-percent advantage is assumed for a Shuttle II, making the assumed structural savings possible equal to 23 plus 9, or 32, percent.

Titanium is often considered as a structural material for high performance (Shuttle-like) vehicles. Titanium and aluminum structure weigh about the same, but titanium has about twice the temperature capability. If titanium were to be used for the structure on a Shuttle II vehicle, some of the external insulation could be either reduced in thickness or, in the lower temperature regions, eliminated altogether. However, a composite structure is much lighter than either titanium or aluminum, and may result in a lighter vehicle than an all titanium structure with limited areas in which the thermal protection has been removed or reduced in thickness.

For purposes of consistency, the main propulsion tanks, whether they are integral or non-integral, are listed in the body group. In earlier mass properties reports, non-integral tanks have been listed in the propulsion group.

The propellant tanks for future Shuttles must be reusable. Therefore, the tank walls must be thicker to survive cyclic loads. Customarily the liquid oxygen tanks are placed in the aft portion of future Shuttles and are integral with the body structure. Therefore, they must carry the bending and inertial loads of everything ahead of the tank. To efficiently carry compressive loads, some type of stiffener must be added to reinforce the tank wall. The LOX tank, located forward in the external tank (ET) on the current Shuttle, is not provided with wall stiffeners. This tank only has two ring frames for internal support to which a slosh baffle assembly is attached.

The liquid hydrogen tank on most future Shuttles is placed forward and must withstand nose gear slapdown loads, as well as other body loads. The aft-located hydrogen tank in the Shuttle ET must carry the compressive thrust loads from the Shuttle's main engines. This thrust is transmitted through the aft ET fittings and provides the force to accelerate the ET and its propellant load. (Prior to staging of the solids, most of the acceleration thrust is transmitted through the solid rocket motor forward fittings.)

Whereas more conventional methods of construction were used on the Shuttle ET, honeycomb sandwich may be the construction of the future for the advanced Shuttles for the following reasons:

1) The honeycomb sandwich can carry compressive loads more efficiently than skin stringer construction (Fig. 1.3).

2) The honeycomb sandwich is smooth on both sides making it easier to attach insulation either internally or externally. This is not true of corrugated or blade-stiffened tank wall construction.

3) The two walls provide redundancy for the containment of a fluid.

4) Finally, honeycomb sandwich may afford the only practical means for the inspection of a tank for micro-leaks. This could be achieved by using an infrared imaging camera that would detect leakage of cryogenic fluids. The camera would be deployed either internally in an empty tank or externally to scan for leaks; the exact method used would depend on insulation location and other considerations. Honeycomb cells (into which propellant or air had leaked) would show up as cooler or warmer areas depending on heat flow direction relative to the infrared camera location.

An integral tank/hot structure was reported by the Boeing Company in Reference 3.6. In this design, a titanium honeycomb sandwhich was used for the upper half of the body shell, while a René 41 honeycomb sandwich was used for the bottom half. Because the shell cross section was oblate, the tank had to be braced internally to maintain its shape under pressure.

In an in-house study (Ref. 3.7), a somewhat similar approach was taken for tank design except that all of the honeycomb sandwich shell was fabricated from Inconel 718, and further, the shell had a circular shape. Inconel 718 structure has a lower strength-to-density ratio, but the advantages of the alternate design are fourfold, namely: a) Inconel 718 is less susceptible to hydrogen embrittlement than titanium; b) by using a single material for the shell, the difficulty of joining titanium to René 41 is eliminated; c) Inconel 718 can be easily field-repaired by brazing; and d) by making the body shell circular, the necessity for tension ties and much heavier ring frames is eliminated.

Recently, some analytical studies have been conducted (in house) of a honeycomb sandwich tank*. The tank consists of an aluminum liner, a foam-filled organic honeycomb core, and a graphite composite overwrap (Fig. 3-4). The overwrap is placed in tension during the fabrication process. This places the aluminum liner in compression and reduces the tensile stresses in the aluminum during tank use. The result is a tank with extended life by virture of reduced tensile stresses during cyclic loading. This design would also require some type of external insulation if the tank wall is exposed to reentry heating.

Manufacturing experience with filament winding has shown that this method of fabrication is approximately one third the cost of hand layup per pound of material (Ref. 3.8) and is cheaper per pound of fabricated aluminum in certain applications. Elimination of the aluminum liner would result in an even greater reduction in the cost of the tank for the fully reusable shuttles. This suggests that there is a need for the development of some type of simply applied thin membrane liner which is impervious to, and compatible with, LH_2 and LOX.

* Analytical study of the advanced technology tank is being conducted by the writer, Robert B. Davis, and William T. Freeman, Jr.

There is considerable historical precedent, both in flight hardware and in research, for the use of honeycomb sandwich for cryogenic tankage. The basis for this assertion is as follows:

Used as Common Bulkhead on Saturn

Honeycomb sandwich was used on the Saturn S-II and S-1VB stages for the LH_2/LOX common bulkheads. The S-II construction consisted of two sheets of 0.062-inch aluminum bonded to a 4.75-inch-thick phenolic honeycomb core. The S-IVB construction consisted of two sheets of aluminum--one 0.032 inch thick and one 0.055 inch thick, bonded to a 1.75-inch-thick fiberglass core (Ref. 3.9).

Tested as a Tank Wall on a Horizontal-Takeoff Single-Stage Shuttle

A series of tests have been made on a Rene 41 honeycomb sandwich to evaluate its use for an integral tank/fuselage hot structure concept (Ref. 3.6). Test panels were cycled in the laboratory in conditions simulating the boost and entry environments. The tests demonstrated the durable nature of the honeycomb and indicated that 500 flights would be an achievable goal. In the integral tank/hot structure concept, a substantial savings in vehicle weight is achieved through the incorporation of the tank, body, and thermal insulation functions into one honeycomb sandwich.

Reduced Scale Honeycomb Tank Built and Tested for Use as a Shuttle ET

Early in the Shuttle program, an alternative to the aluminum expendable ET was investigated (Ref. 3.10). The tank wall tested consisted of a 0.25-inch NOMEX honeycomb core bonded with a film adhesive to a 0.040-inch aluminum liner. The honeycomb was then overwrapped with a cloth and wet wound in the hoop direction with a 0.015-inch-thick layer of glass* and epoxy. The tank diameter was about one quarter that of the Shuttle tank. The conclusion of the study, for the expendable external tank application, was that the tank would be cheaper to build but would be heavier. The reusable graphite composite tank being studied by the writer et al. is projected to be lighter than an insulated conventional all-aluminum or glass overwrapped tank.

* E-glass (electrical grade glass)

Body Weight Savings Summary

Item	Projected Savings, %	Classification
Overall body shell configuration such as circular versus oblate cross section	40*	Configuration
Composites for aluminum and honeycomb sandwich wall construction for skin-stringer	32	Technology
Tanks (Note: even with advanced technology the reusablility factor is projected to yield a tank 10 to 20 percent heavier.)	-10**	Technology
Tanks simple cross section such as circular versus double lobe or oblate	15	Configuration

* Based on comparison of an oblate cross section with non-integral tanks and a circular cross section with integral tanks (Ref. 3.2).

** Based on the assumption of increasing the wall thickness of the tank by 30 percent to make the tank reusable for at least 500 missions.

3.1 Anon: "Orbiter Crash and Rescue Manual:" JSC-17952, March 1982.

3.2 MacConochie, Ian O. and Klich, Phillip J.: "Technologies Involved In Configuring An Advanced Earth-to-Orbit Transport For Low Structural Mass." SAWE Paper No. 1380. May 12-14, 1980.

3.3 Thompson, V. and Bradley, R. J.: "Pultrusion of Advanced Composites." Presented at the Society of Manufacturing Engineers Conference on Advanced Composites: Design Manufacture and Applications, Los Angeles, California, June 1-3 1976, SME Paper No. EM76-415.

3.4 Wilson, M.L., MacConochie, I. O. and Johnson, G. S.: "The Pultrusion Process for Structures on Advanced Aerospace Transportation Systems." Presented at the 45th Conference of Society of Allied Weight Engineers Inc, Williamsburg, Virginia, SAWE Paper No. 1741, Boeing Ref., May 12-14, 1986.

3.5 Smith, P. J., Thomson, L. W. and Wilson, R. D.: "Development of Pressure Containment and Damage Tolerance Technology for Composite Fuselage Structures in Large Aircraft." NASA CR 3996, August 1986.

3.6 Shideler, John L., Swedle, Allen R., and Fields, R.A.: "Development of Rene 41 Honeycomb Structure as an Integral Cryogenic Tankage/Fuselage Concept for Future Space Transportation Systems." AIAA Paper No. 82-0653. Presented at the 23rd Structures, Structural Dynamics, and Materials Conference, New Orleans, Louisiana, May 10-12, 1982.

3.7 MacConochie, I. C. and Davis, R. B.: "Alternative Designs of Integral Tanks for Advanced Space Transportation Systems" Journal Spacecraft and Rockets, Vol. 22, No. 4, July-August 1985.

3.8 Freeman, William T., Jr. and Stein, Bland A.: "Filament Winding: Waking the Sleeping Giant." Aerospace America, October 1987, pp. 44-49.

3.9 Tharratt, Charles E.: "SERV - a Reusable Single Stage to Orbit Space Shuttle Concept. The British Interplanetary Society Journal, Vol. 28, January 1975, Pages 3-25, NAS8-26341.

3.10 Brown, L. D., Martin, M. J. Aleck, B. J., and Landes, R.: "Composite Reinforced Propellant Tanks--Space Shuttles." The Grumman Corporation. CR-134726, February 1975.

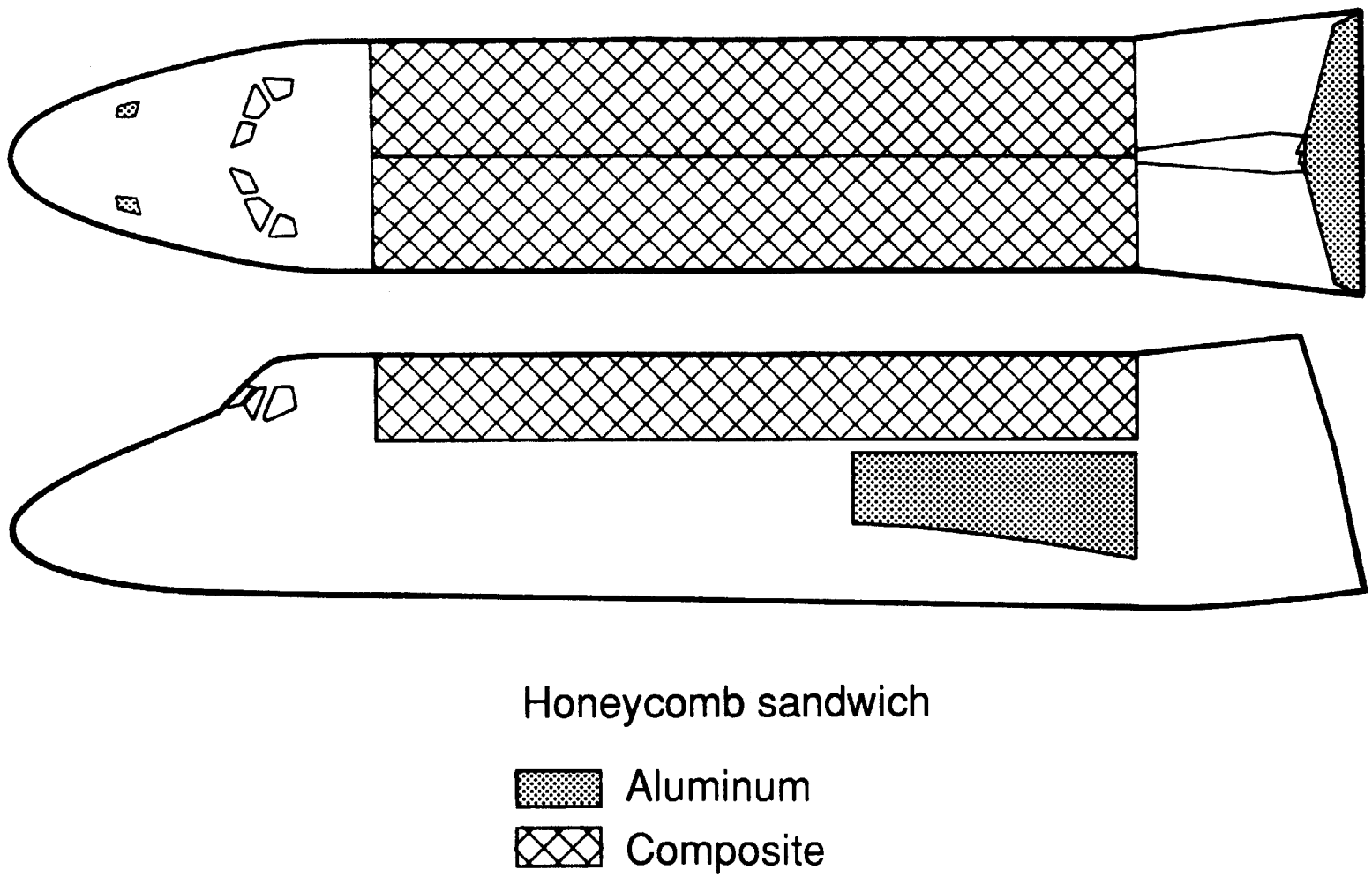

Figure 3.1 Shuttle honeycomb usage (body).

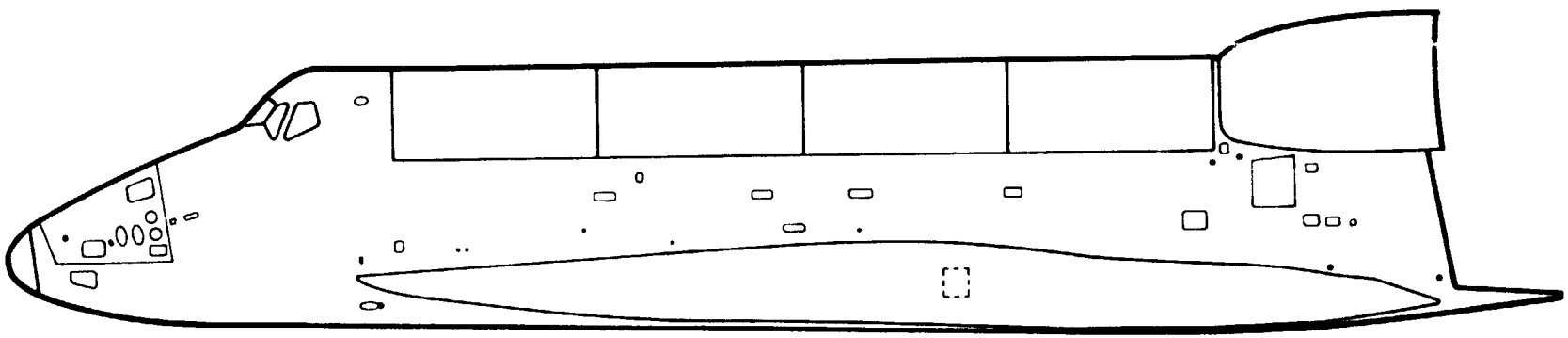

Figure 3.2 Body shell penetrations (left side only).

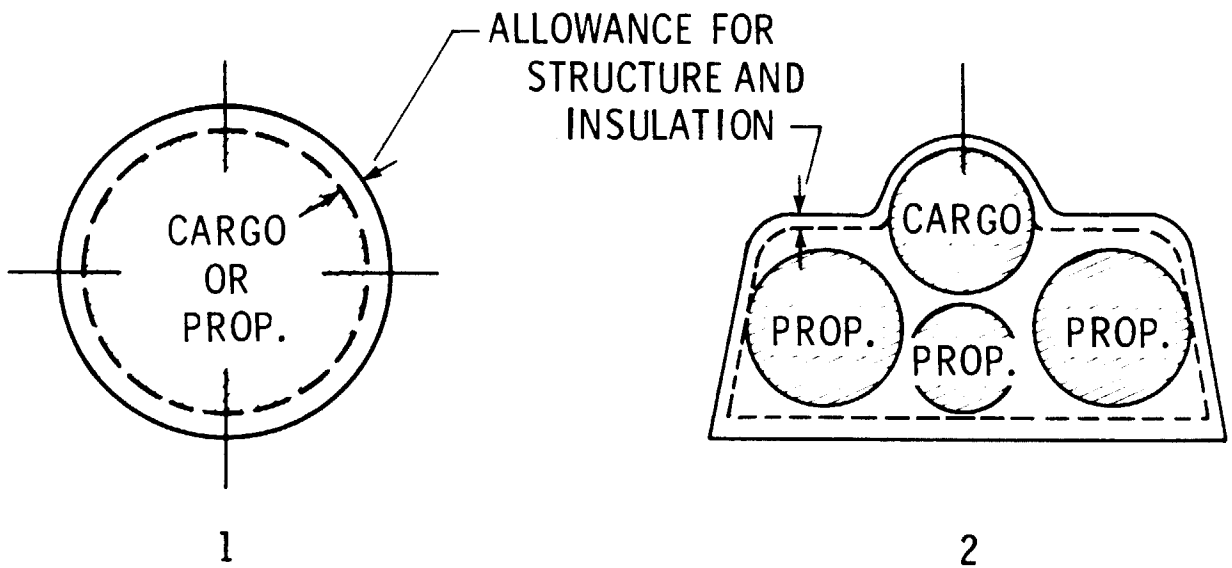

ITEM	CONFIGURATION	
	1	2
USABLE CROSS SECTION	682 m^2 (7332 ft^2)	682 m^2 (7332 ft^2)
STRUCTURAL MASS/UNIT LENGTH	866 kg/m (582 lb/ft)	2218 kg/m (1491 lb/ft)

Figure 3.3 Simple and complex body shapes compared.

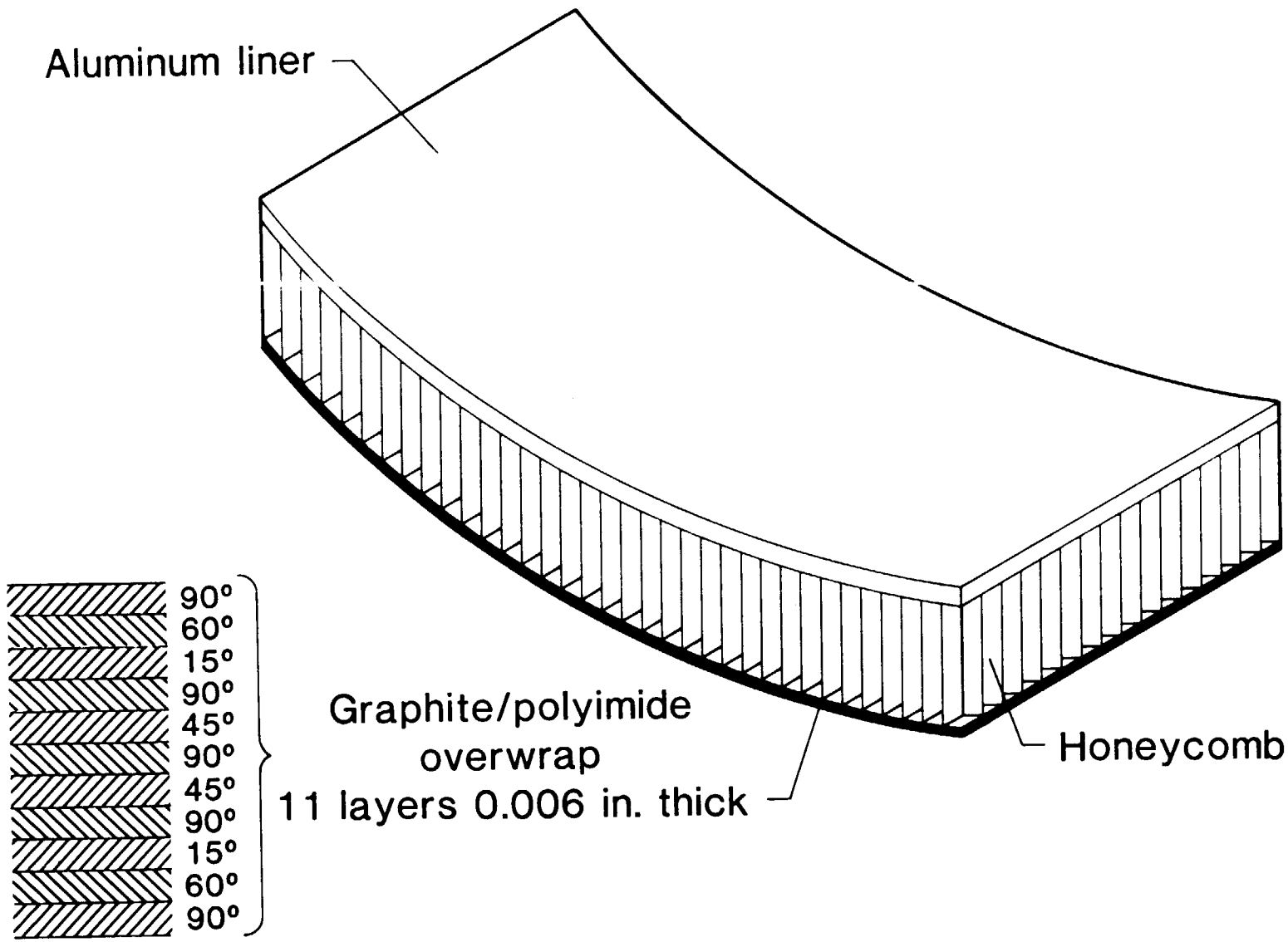

Figure 3.4 Honeycomb tank wall concept.

4.0 Thermal Protection System

The current Shuttle utilizes various insulations on different portions of the vehicle depending upon the thermal and other environmental factors (Fig. 4.1). A flexible reusable insulation (FRSI) is used in those regions where temperatures do not exceed 700° F.

A potentially more durable reusable surface insulation (RSI) tile has been thermally tested by the writer. In this shell tile design, an outer shell is structural and carries the aerodynamic loads while the internally installed flexible insulation provides the insulation (Fig. 4.2 and U.S. Patent No. 4,456,208). In comparison, the current RSI tiles carry the loads and provide the insulation. The sides of the shell tiles tend to be more highly conductive than the siliceous coatings on RSI tiles. On the other hand, the flexible insulations have much lower density-conductivity products. The result is a tile which is lighter than the RSI but slightly thicker and more durable for the same thermal protection. Much more testing of the shell tile concept would be required to corroborate these findings. This would mean testing the tiles for moisture and static and acoustic loadings. The weight of the shell tile compared with other designs is depicted in Fig. 4.3.

In addition to the shell tile, the writer has thermally cycled a heat shield having a 5/8-inch-thick brazed titanium honeycomb sandwich as the outer layer. Flexible high temperature insulation was placed underneath the honeycomb sandwich. The panel was repeatedly cycled to 1200° F without apparent damage to the outer surface even though the nominal operating limit for 6AL-4-V is 750° F. (However, a slight buckle of the interior honeycomb face sheet was evident.) The heat shield is designed for installation on an aluminum tank that is stiffened externally with an integral isogrid (Fig. 4.4).

A TPS that is similar to the Shuttle Orbiter system can be designed with less conservatism by taking advantage of the lessons learned from the Shuttle flights (Refs. 4.1 and 4.2).* The peak structural temperatures, even for the short cross-range flights, were found to be less than expected. The savings in weight, through a reduction in the current Shuttle tile thickness, is estimated to average 25 percent. However, improving the durabililty of the current Shuttle TPS could negate some of the projected savings (Ref. 4.3). By limiting the vehicles to short cross-range entries, an estimated 15 percent weight savings in TPS is projected from reference 4.4.

* Note: One factor that added conservatism to the Shuttle tile designs is an early military requirement that the Shuttle be able to land on the first orbit of a polar mission.

Thermal Protection Weight Savings Summary

Item	Projected Savings, %	Classification
Lessons learned	25*	Technological
Advanced tile design	15*	Technological
Limit vehicle to short cross-range entries	15	Configuration

*The projected savings through technology for Table I at the end of the paper is (1-[(1-.25)(1-.15)]) X 100 = 36 percent.

4.1 Anon.: "Shuttle Performance: Lessons Learned." NASA CP-2283, pp. 949-966, 1983.

4.2 Throckmorton, D. A., Zoby, E. V., and Kantsios, A. G.: The Shuttle Infrared Leeside Temperature Sensing (SILTS) Experiment," AIAA 23rd Aerospace Sciences Meeting, Reno, Nevada; January 14-17, 1985.

4.3 Kelly, H. N. and Webb, G. L.: "Assessment of Alternate Thermal Protection Systems For the Space Shuttle Orbiter. NASA TM-84491, May 1982.

4.4 Wurster, K. E. and Eldred, C. H.: "Technology and Operational Considerations for Low-Heating-Rate Entry Trajectories." Journal of Spacecraft and Rockets, vol. 17, No. 5, September-October 1980, pp. 459.

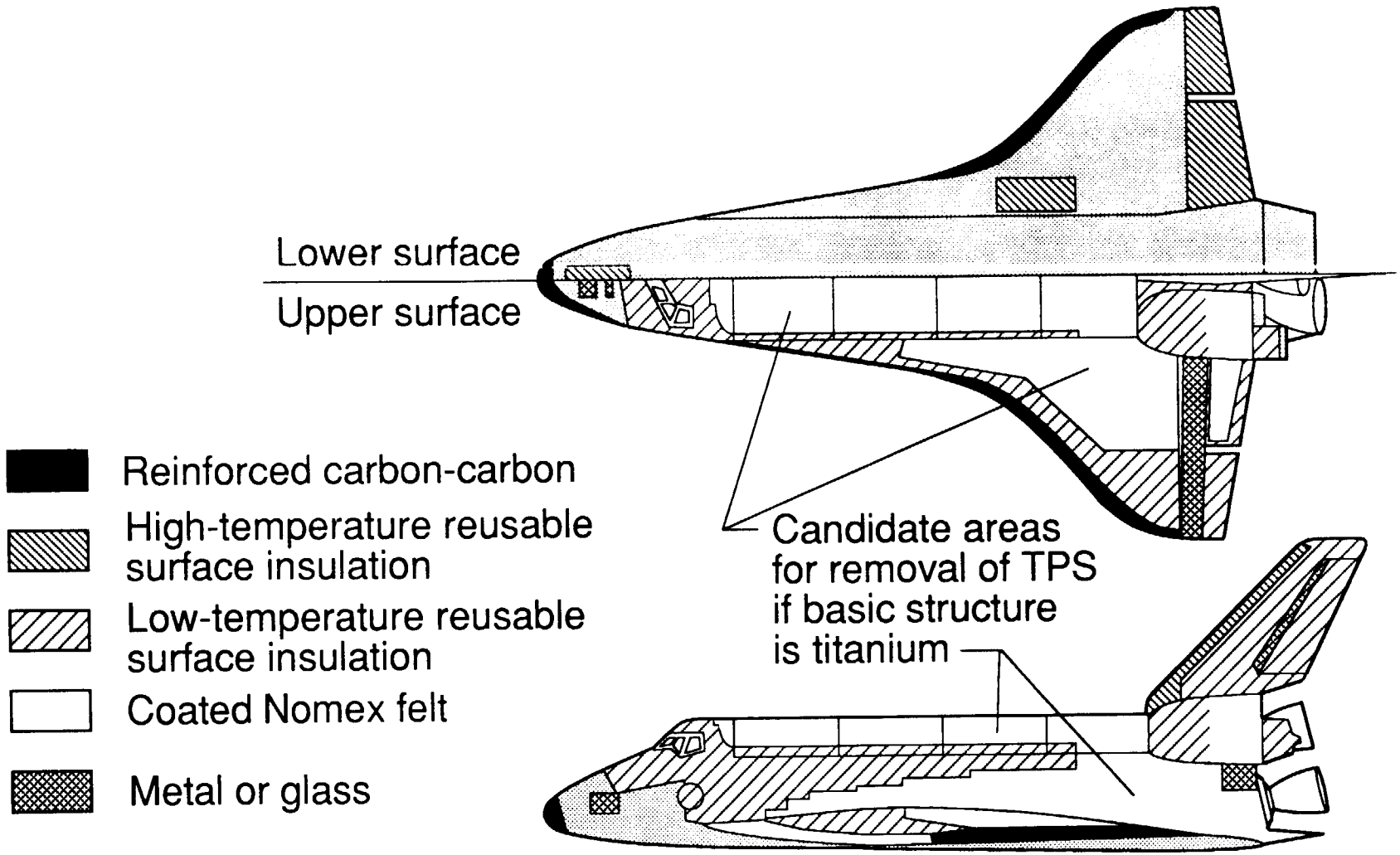

Figure 4.1 Shuttle Orbiter thermal protection.

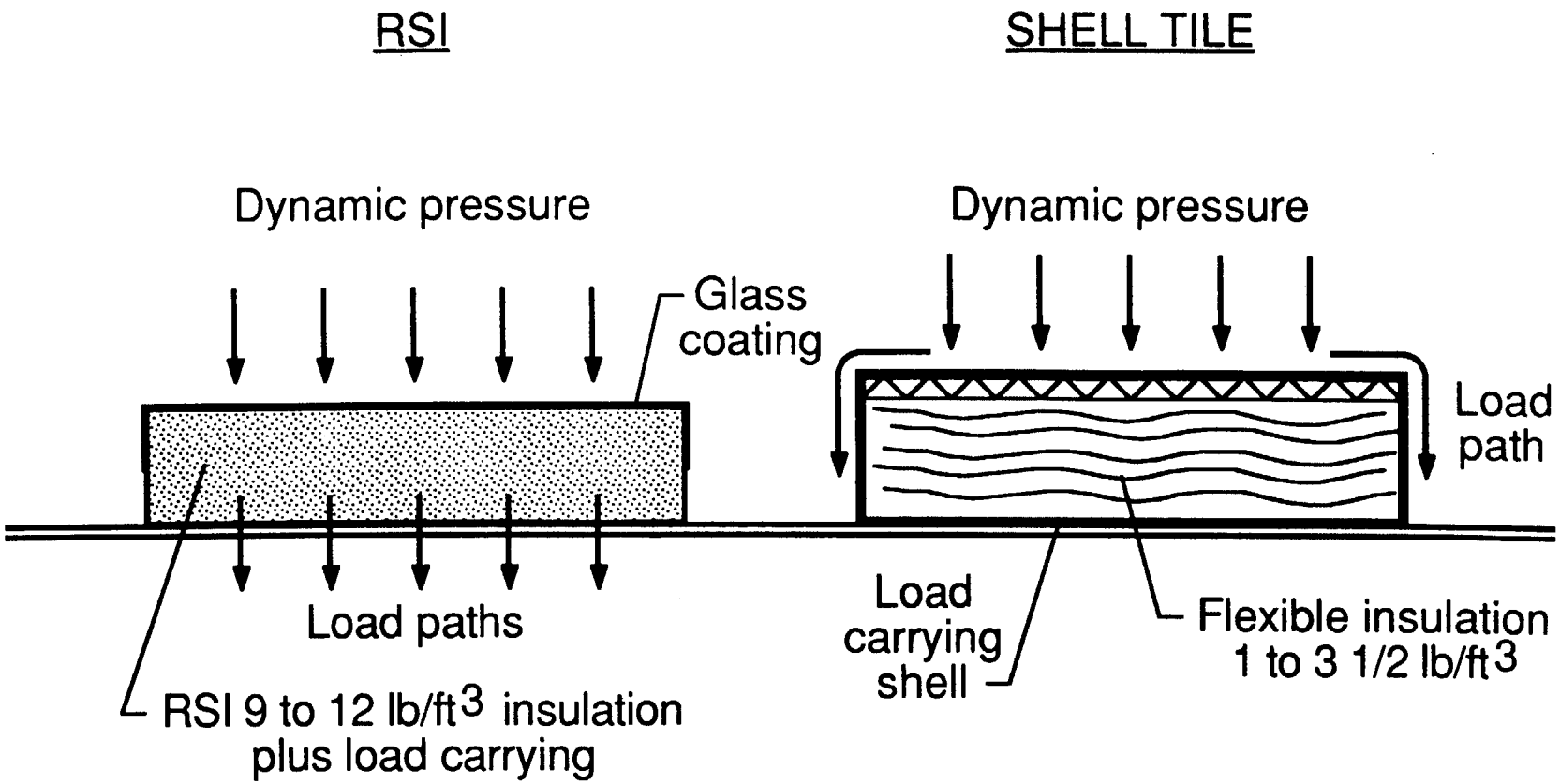

Figure 4.2 Shell Tile and RSI: comparison of concepts.

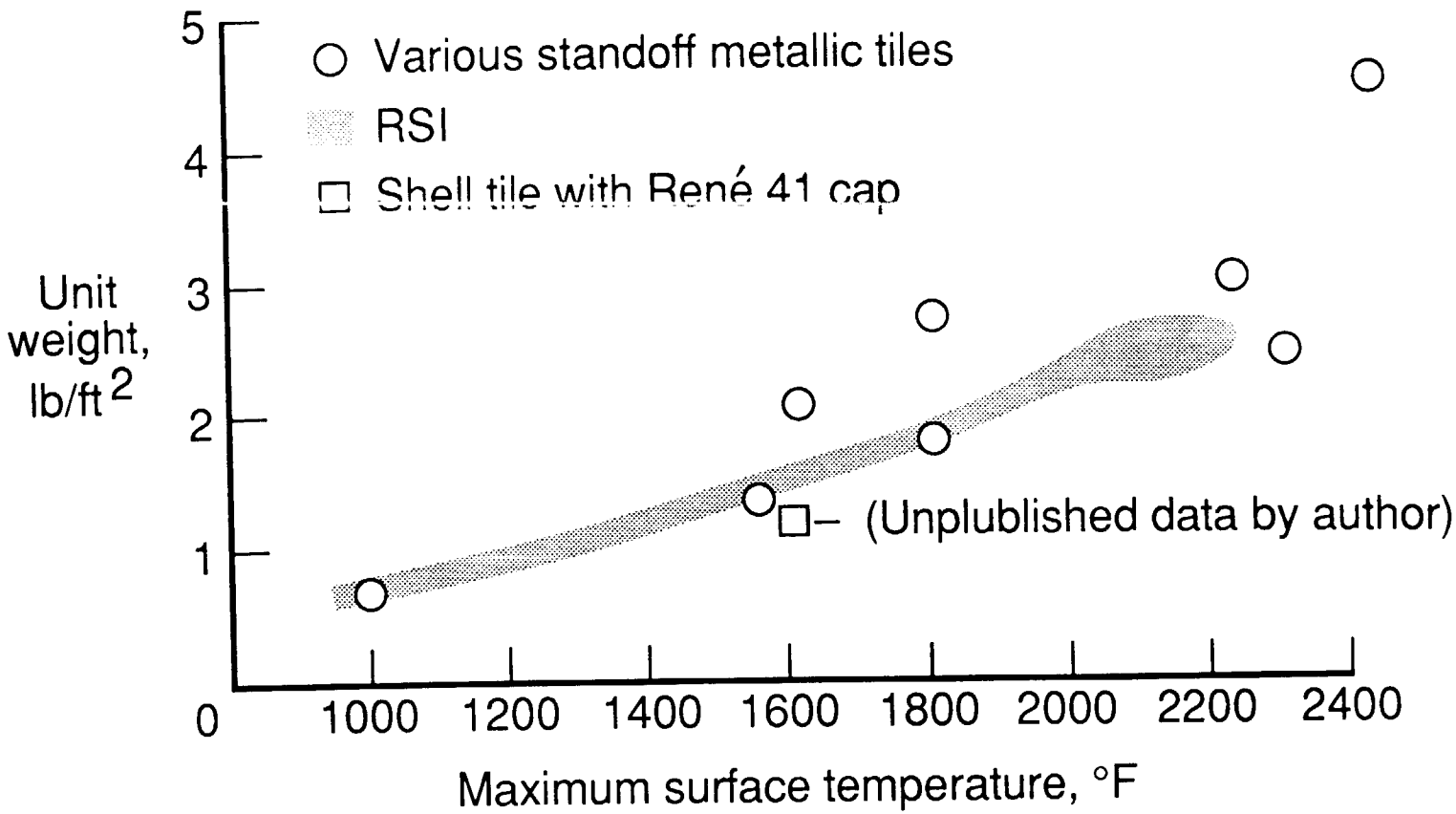

Figure 4.3 Unit weight comparisons for various tile concepts from reference 4.3.

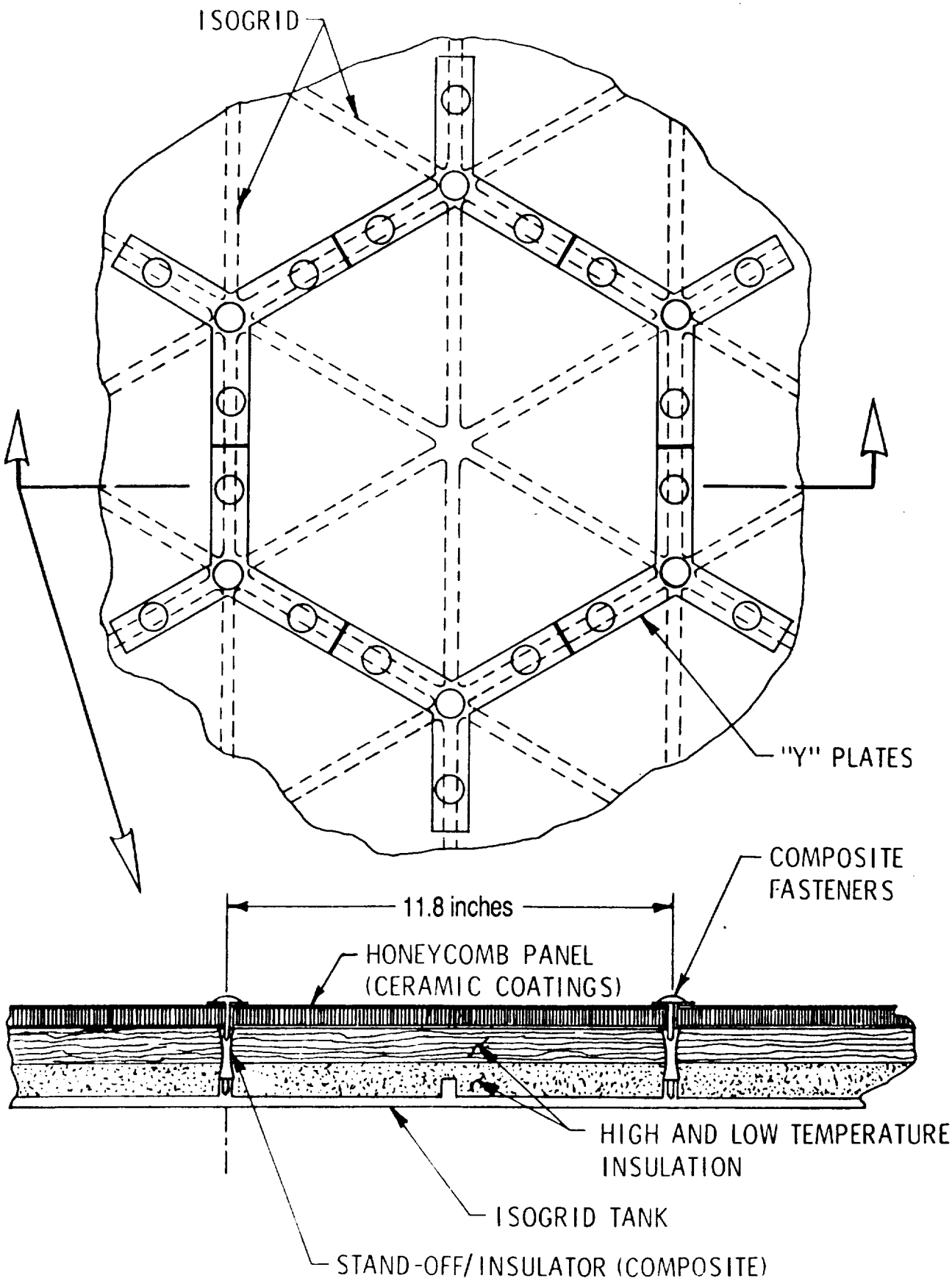

Figure 4.4 Hexagonal tile concept.

5.0 Landing and Auxiliary Systems

On the current Shuttle, this category includes the main landing gear and controls, the brakes, and the on orbit payload separation and manipulator systems. At present, there is no weight allowance for a manipulator arm on the Shuttle II; this function is performed by an (assumed) Space Station or space platform manipulator.

For this assumption, deployment of payloads, other than at a Space Station or space platform, would have to be accomplished using some type of self-release system, such as guides, or rails and springs. To reduce the landing gear weight, drag links and other structure could be fabricated from composites. An oleo main strut could also be filament wound with a composite but lined with a metal. Since composites are somewhat weak in compression, the metallic liner could be sized to assume most of the compressive load of landing while the composite overwrap assumes most of the hydraulic pressure load. Wheels could conceivably be fabricated from composites, but no known research is being conducted in this area. Skids deployed between the main wheels could be used for braking (private communication S. M. Stubbs, Impact Dynamics Branch). Such a braking system would be more durable inasmuch as skids would support the vehicle in the event of tire failure.

Landing Gear and Auxiliary Weight Systems Savings Summary

Item	Projected Savings, %	Classification
Eliminate manipulator arm	15.5	Configuration
Increase composite usage in landing gear	9.0	Technology

6.0 Propulsion - Ascent

The current Shuttle employs three 3,000-psi-chamber-pressure LOX/LH_2 engines each equipped with a fixed expansion-ratio nozzle (77.5 to 1). Each engine weighs 6,885 pounds. Ancillary systems weigh 1,776 pounds per engine. This category includes the gimbal system, hydraulic supply, installation, heat shield, pressurization, and propellant management systems. The propellant feed system for all three engines weighs 5,023 pounds or 1,674 pounds per engine. Summarizing the above, the all-up weight of one third of the Shuttle propulsion system (or one engine) is 10,335 pounds.

Two companies have recently studied two types of new engines and have made estimates of weight savings potential when advanced composites are used (Refs. 6.1 and 6.2). One engine studied is a 670,000-pound-thrust liquid methane engine, and the other is a LOX/LH_2 engine for an orbital transfer vehicle. A commonly made substitution in these studies is SiC/Al for Inconel 718 and CRES. The engines and the savings projected are as follows:

		Projected Savings, %		
Engine	Weight, lb	Contractor A	Contractor B	Shuttle II
670 klb Vacuum Thrust (METHANE)	8212	13	26	15
OTV (LOX/LH_2)	458	20	31	20

A conservative figure of 15 percent will be assumed for main engines. For orbital transfer engines, a 20-percent savings will be assumed.

Bowen and Nagy studied single crystal superalloys for turbopump blades (Ref. 6.3). The primary concern in the study was to design a blade that would avoid a fourth excitation mode. However, single crystal blades for turbines and pumps may provide weight reductions in future rocket engines.

Suhoza and Bickford have studied advanced carbon-carbon nozzles to reduce the weight and improve the efficiency of reusable orbital transfer vehicles (Ref. 6.4). This type of nozzle could serve as a nozzle extension for Earth-to-orbit transports at reduced weight over actively cooled or radiation-cooled metallic designs.

The pressurization and feed systems for the main engines are included in this category. Spond and others have built and tested metal lined feedlines having a composite overwrap (Ref. 6.5). These lines are projected to give a savings of 15 to 20 percent in the pressurization and feed systems. If a scavenging system is developed, this added weight would have to be charged to either the main, maneuvering, or reaction control system propulsion. Such a system is being studied at Lewis Research Center. The net savings realized will be in the propulsive fluids conserved.

The previously mentioned savings are based only on selective material substitutions. Factors which could cause weight increases are requirements for increased engine component life and performance margins. These two factors are related and are obtained by operating the engine at less than maximum thrust capability. In recent space transportation system studies one-engine-out capability is being required (Ref. 6.6). For example, if a vehicle is equipped with seven engines and one engine fails, the remaining six engines must be capable of producing the same amount of thrust, or all seven engines must be normally operated at approximately 86 percent of maximum power in order to allow for one-engine-out capability. In Table II, a 15 percent weight increase is shown to reflect derating the engine operating thrusts.

In terms of the Space Shuttle Main Engines (SSME's) and the definitions used, the derated operating thrust level is 86 percent X 109 percent X 470,000 lbT, or 440,578 lbT. For the SSME the 109 percent thrust level was referred to as the emergency power level (EPL) and corresponds to a thrust level of 512,000 pounds.

Main Engine Weight Category Savings Summary

Item	Savings, %	Classification
Engines	15	Technology
Feedlines	15	Technology
Increased Performance Margins	-15	Configuration

References

6.1 Judd, D. C.: "Composite Material Application to Liquid Rocket Engines." Report No. 2418-F Aerojet Liquid Rocket Company, Contract NAS8-34623, NASA CR-170697, December 10, 1982.

6.2 Huebner, A. W.: "Composite Material Application For Liquid Rocket Engines." Report No. RI/RD82-289, Rockwell International, Contract NAS8-34509, NASA CR-170707, December 1982.

6.3 Bowen, K. and Nagy P,: "The Evaluation of Single Crystal Superalloys For Turbopump Blades in the SSME." Presented at the AIAA/ASME/ASEE 22nd Joint Propulsion Conference, Huntsville, Alabama, Paper No. AIAA-86-1477. June 16-18, 1986.

6.4 Suhoza, J. P. and Bickford, R. L.: "Experimental Evaluation of Candidate Carbon-Carbon Materials for OTV Engine Nozzle Extensions." Presented at the AIAA/ASME/ASEE 22nd Joint Propulsion Conference, Huntsville, Alabama, Paper No. AIAA-86-1429, June 16-18, 1986.

6.5 Spond, D. E., Laintz, D. J., Hall, C. A., and Dulaigh, D. E.: "Vacuum Jacketed Composite Propulsion Feedlines for Cryogenic Launch and Space Vehicles-Volume I." Prepared by the Martin Marietta Corporation. NASA Lewis Research Center, Contract NAS3-16762, NASA CR-134550, March 1974.

6.6 Visek, William A., Jr. "Space Transportation Booster Engine Configuration Study: Executive Summary. United Technologies, Pratt and Whitney Aircraft, FR-19691-1-Vol 1, Contract NAS8-36857, NASA CR-179175, March 1987.

7.0 Reaction Control System (RCS)

The reaction control system on the Shuttle uses two propellants, monomethyl hydrazine (MMH) and nitrogen tetroxide (N_2O_4). On Shuttle II vehicles, LOX and LH_2 have been selected as the baseline propellants for the RCS. These propellants are common to the ascent and maneuver propulsion systems and potentially allow for a reduction in the aggregate impulse propellant and reserve and residual propellants through the use of a central propellant management system. The subsystem weight without any technology improvements would be heavier than the storable system principally because the LH_2 tanks are larger and heavier than the storable fuel tanks. After combining advances in technology with inherently heavier system weight, a zero weight savings is assumed. The overall savings in vehicle weight for the LOX/LH_2 RCS would appear in the fluids categories in the weight statement.

Reaction Control System Weight Savings Summary

Item	Projected Savings, %	Classification
RCS system (including engines, tanks, and pressurization and feed systems)	0	NA

8.0 Orbital Maneuvering System (OMS)

The Shuttle OMS also uses MMH and N_2O_4 as propellants. The Shuttle II vehicle uses cryogenic propellants in its OMS. For the same technology, these cryogenic systems would tend to be heavier than the storable systems because propellant tanks for the hydrogen and LOX tend to be heavier. Like the RCS system, combining an inherent increase in the weight of the system with a decrease by using advanced materials, the weight change of the OMS system is assumed to be zero for the Shuttle II and 1992 technology maturity date.

Orbital Manuevering System Weight Savings Savings Summary

Item	Projected Savings, %	Classification
OMS system (including engines, tanks, and pressurization and feed system)	0	NA

9.0 Prime Power

The Shuttle uses fuel cells to power the avionics and hydrazine-fueled turbines to drive hydraulic pumps for operation of the surface controls, engine gimbals, and other actuators. Currently, the Shuttle (for reliability and safety reasons) uses three fuel cell sets; each set is capable of delivering 7 kW continuously and 12 kW peak. Four reactant dewar sets are used with the three fuel cell sets. For similar reliability reasons, three auxiliary power units are used; each is capable of delivering 63 gal/min of hydraulic fluid at 3,000 psi.

The peak power demands on the Shuttle prime power system occur during ascent and during entry near the terminal area energy management (TEAM) point. The peaks are of short duration.

For the Shuttle II, the present Shuttle fuel cell concept would still be applied. Available new technology suggests that higher current densities could be used to get higher peak powers and effectively increase the power deliverable for a given weight of fuel cell (Ref. 9.1). Operating fuel cells at higher current densities reduces life, but the concept could be used to provide emergency power. In lieu of the hydrazine-powered turbine pumps (referred to as APU's), batteries and electric motors, such as those described in references 9.1 and 9.2, are proposed for Shuttle II.

By using fuel cells and batteries in lieu of fuel cells and hydraulic power, greater commonality exists between the two prime power sources. With the fuel cell-battery combination, the batteries can be used primarily for the short-term high power demands, whereas the fuel cells can be used for the high kilowatt-hour requirements. Both systems could conceivably be "down-sized" by virtue of the ability to recharge "undersized" batteries using the fuel cells during off-peak demand periods and by reducing the number of redundant systems in both prime power sources with the knowledge that either could be relied upon to supply some power (after proper conditioning) in the event of partial failure of one. For further redundancy, the fuel cells should be configured so that they could be operated at much higher current densities in an emergency. High voltages, suitable for actuation functions, can also be attained with fuel cells by placing them in series.

In view of the above (and somewhat arbitrarily), it is assumed that one third of the weight of each primary system can be eliminated by virtue of the cross-use redundancy strategy and, further, that the two systems can be reduced by 33 percent through new techniques for handling peak power.

Prime power weight is directly affected by the duration of the mission and number of crew, the former dictating the number of kW hrs needed and the latter principally affecting the size (and power required) for the life support systems. An obvious means of reducing power requirements is therefore through a reduction in the length of mission and number of crew needed.

Primary Power Weight Savings Summary

Item	Projected Savings, %	Classification
Primary power restructuring	52	Technology
Redundancy through fault tolerant design applied to two similar (electrical) primary power sources	(33)	
Batteries for APU's	(28)	
Reduced mission (Reduced crew and days on orbit. Crew of 5 vs 7 and 3-day mission vs 7)	20	Configuration

References:

9.1 Mullin, J. P. et al.: "The NASA Program In Space Energy Conversation Research and Technology." Proceedings of the 17th Intersociety - Energy Conversion Engineering Conference, Vol. 11, August 1982.

9.2 Swingle, W. L. and Edge, J. T.: "The Electric Orbiter." Proceedings of the IEEE 1981 National Aerospace Electronics Convention, Dayton, Ohio, Vol. 1, May 19-21, 1981.

10.0 Electrical Conversion and Distribution

Potential areas for weight savings in the electrical conversion and distribution equipment include higher frequency (20 kHz) power sources, which reduce the weight of the switching and power-conditioning equipment (Ref.10.1). Electrical cabling weight can be reduced by improved redundancy strategies (i.e., fault tolerant design), by re-routing, and by reduction in the number of connectors. Electrical supports and installation weight can be reduced by utilizing lighter materials such as composites in lieu of metallics.

Overall, the electrical conversion and distribution system weight can be reduced by an estimated 30 percent through the use of high technology (lower power demand) avionics and by configuring the vehicle for lower power usage, such as by reducing crew size, cabin size, and mission length.

Electrical Conversion and Distribution Weight Savings Summary

Item	Projected Savings %	Classification
Overall System	18*	Technology
Conversion and distribution equipment (4)		
Cabling installation & support equipment (10)		
Miscellaneous (5)		
Overall System (reduced demand)	30	Configuration

*Note: The projected savings in the parentheses are not additive since they represent different percentage reductions of different weights within category 10.0.

REFERENCE:

10.1 Hoffman, A.C. et al., "Advanced Secondary Power Systems for Transport Aircraft," NASA Technical Paper 2463, May 1985.

11.0 Hydraulic Conversion and Distribution

The current Shuttle Orbiter utilizes hydraulics at 3,000 psi to power all the surface controls. The distribution system includes the hydraulic supplies to the body flap, elevons, speedbrakes, the nose and main gear, and the six main engine gimbal actuators. The hydraulic supply is obtained from the three hydrazine-turbine-powered hydraulic pumps referred to earlier.

Hydraulic systems that operate at 8,000 psi are being studied (Ref. 11.1). These systems require less volume than their 3,000-psi counterparts. The smaller-size actuator and lines of the high-pressure hydraulics are attractive features for high-performance aircraft having thin wings. For the Shuttle II, a savings of 30 percent is projected for the overall system, which includes actuators and hydraulic distribution and control system. A 20-percent savings is projected for the distribution system; however, the possiblity of leaks (particularly on RSI tile) and the higher heat loads render the advanced hydraulic systems less attractive for future Shuttles.

When control-configured design for the overall vehicle is employed, the hydraulic distribution system weight should decrease because of the smaller relative size of control surfaces (and lower hinge moments) required.

Surface Controls Weight Savings Summary

Item	Projected Savings, %	Classification
High Pressure System	20	Technology
Control-Configured Design	20	Configuration

11.1 Brahney, James H.: "Evolving 8,000 psi Hydraulic Systems." Aerospace Engineering, April 1985.

12.0 Surface Controls

In a study of the current Shuttle Orbiter by Edge (Ref. 12.1), an estimated 2,656 pounds in weight savings was identified by partially converting from hydraulic to electric actuators. This weight reduction resulted from substantial savings in primary power supply (batteries instead of APU's for category 9.0) and a greatly reduced demand on the environmental control system (category 14.0). Some dedicated hydraulic systems were retained.

Table 12-1 represents an estimate of the weight reduction in the Shuttle Orbiter if all actuators are converted to electric. Actuator motor controllers are categorized under item 10.0. This category contains the electrical power control and distribution equipment for the Shuttle and is a logical place for the actuator motor controllers. If charged to the actuator system, the electrical actuators would be an estimated 128 percent heavier rather than 20 percent lighter than hydraulic actuators. The Shuttle hydraulic actuators could be viewed as devices requiring a continuous supply of energy in the form of a 3,000-psi supply of fluid, whereas electric motors are dormant until receiving a command for an actuator deflection. A substantial savings in using the electrical system, however, is in the reduced power and cooling demand, weight savings which do not appear in this category.

Table 12-1

Impact of Substituting Electric For Hydraulic Actuators On The Shuttle Orbiter

Category	Weight Change, %	Weight Change, lb
9.0 Prime Power	-21	-634
10.0 Electrical Conversion and Distribution	+13	+1318
11.0 Hydraulic Conversion and Distribution	-100	-1953
12.0 Surface Controls	-20	-568
25.0 Reserve Fluids*	-5	-322
26.0 Inflight Losses* (Hydrazine)	-18	-619
	Orbiter Weight Savings	2778 lb

12.0 Cont.

A candidate configurational weight saving item would be a reduction in the design surface control rates as vehicle size increases, an apparent characteristic trend for aircraft. Without this factor, actuator weight should vary with surface control area to the three halves power. Another means of reducing weight is to relax the longitudinal static stability requirements or levels and reduce the size of the control surfaces while increasing the surface rates. In reference 12.2, by using a dorsal or tip fins in lieu of a vertical tail, surfaces needed for directional control were reduced by approximately two-thirds in area, but directional stability levels were also reduced. In spite of the requirement for increased control surface rates, a net reduction in actuator weight is projected.

Surface Control Weight Savings Summary

Item	Projected Savings, %	Classification
Actuators		
Hydraulic-to-electric	20	Technology
Reduced stability level (active control)	20	Configuration
Reduced control surface rates with vehicle size increases	Depends on vehicle size	Configuration

12.1 Edge, J. G. Jr.: "An Electromechanical Actuator Technology Development Program." SAE Automotive Engineer Technical Paper No. 1780581, Cherry Hill, North Carolina, April 12, 1978.

12.2 Lepsch, R. A. and MacConochie, I. O.: "Subsonic Aerodynamic Characteristics of a Circular Body Earth-to-Orbit Transport." Presented at the AIAA 4th Applied Aerodynamics Conference, San Diego, California. Paper No. 86-1801-CP, June 9-11, 1986.

13.0 Avionics

Substantial weight savings in avionics items are projected for the Shuttle II compared with the current Shuttle. Some relevant studies of lightweight avionics have been reported in references 13.1 and 13.2. Somewhat arbitrarily, a 50-percent weight reduction is projected for a Shuttle vehicle having similar requirements as the current Shuttle. A substantial savings results from a greatly reduced power and cooling demand, producing a ripple effect on the size and weight of the prime power source and the environmental control system. Again, somewhat arbitrarily, a 50-percent reduction in power requirement for the avionics is projected for the Shuttle II. The assumptions can be altered when a better definition of the systems is available. The following represents some of the technologies which are projected for use in future shuttles. A savings in crew cabin size and weight would also be realized through reduced avionics system volume requirements. Reduced crew size also results in reductions in displays and environmental control system weights. Overall, fault tolerant systems and principles would be applied to eliminate (otherwise required) redundant avionics systems.

	Subcategory	New Technology
13.1	Guidance, Navigation, and Control	New inertial measuring unit New aerosurface amplifier
13.2	Communications and Tracking	Global positioning system for TACAN New technology for S-band amplifiers and pre-amps
13.3	Displays and Controls	LED multi-functional displays for individual cathode ray tube displays
13.4	Instrumentation Systems	Gallium arsenide for signal conditioner

Avionics Weight Savings Summary

Item	Projected Savings, %	Classification
New high technology systems for all subcategories	50	Technology
Reduced Crew Size	10	Configuration

Reference

13.1 Canning, T. D.: "Avionics Weight Control For the Starship and Beyond." A presentation at the 45th annual S.A.W.E., Williamsburg, Virginia, SAWE Paper No. 1736, May 12-14, 1986.

13.2 Kriegsman, B. A., "Guidance and Navigation System Studies For Entry Research Vehicles," The Charles Stark Draper Laboratory, Inc., Cambridge, Massachusetts. Report No. CSDL-P-2864.

14.0 Environmental Control and Life Support

For the Shuttle II systems, a weight savings of 5 percent is projected for the closed-loop (freon) system for long duration (greater than three day) missions. This is achieved through lessons learned and through the elimination of the ammonia system which is now required for ground cooling until the Orbiter is "safed". This presupposes the development of a fast-attach ground-based cooling system so that the ammonia system can be eliminated.

For missions of less than 72 hours, the use of the current Shuttle flash evaporator is assumed. This method of cooling is already used on the Orbiter during ascent from 100,000 ft until the cargo bay doors are opened. The projection for weight savings for the short duration mission is 60 percent and assumes only a requirement for a flash evaporator with elimination of the freon and ammonia systems. The elimination of the Orbiter freon system is not considered to be related to technology but is configurational--since any vehicle limited to very short missions could use this concept.

Some savings may be achievable through the combination of certain heat sources and sinks. That is, some of the Orbiter subsystems require electric heaters to maintain acceptable operating temperatures, whereas some require cooling. Both require power. Presently, the concept is already used on the Orbiter in that some heat is rejected in the hydraulic fluid--a fluid that must be kept warm on-orbit. The underlying issue is that there may be some merit to the utilization of a computer-controlled centralized thermal management system.

Environmental Control System Weight Savings

Item	Projected Savings, %	Classification
Lessons learned: includes a reduction in steam duct weight on the flash evaporator.	10	Technology
Short duration missions using a flash evaporator (Includes reduction in steam duct weight and deletion of the ammonia and freon systems.)	60	Configuration

15.0 Personnel Provisions

Personnel provisions include the food, water, and waste management systems. Also included are the fire detection system, the pilot and mission specialists stations, and airlock provisions. Weight savings are configurational such as the elimination of the galley. No technology factors have been applied, although some savings in these provisions should be available by 1992.

Personnel Provisions Weight Savings Summary

Item	Projected Savings, %	Classification
Reduced food, waste, and water management systems.	40	Configurational

Discussion

Potential weight reductions have been identified for Shuttle II subsystems. For the four years between now and a 1992 launch date, the projected weight savings for Shuttle II subsystems vary widely. This is partly a reflection of the wide variance in the research work being conducted in the various areas and the degree of difficulty. For example, there is little basis for projecting reductions in large reusable cryogenic tanks.

There is, on the other hand, every evidence that large reductions in the weight of avionics over the current Shuttle will be available by 1992. In the area of structure, substantial savings are projected. There is evidence that filament-wound overwraps, pultrusions, and honeycomb sandwiches made of composites (and bonded) will provide the best prospects for the lightest Shuttle II. A graph, such as that shown for filament winding of pressure vessels, is useful for making a prediction for increased usage of this structural concept (Fig. D-1). The substantial usage of honeycomb as delineated in this report on the current Shuttle Orbiter and the increase in its usage in aircraft are also indicators of the future (Fig. D-2).

The further development of honeycomb sandwich and methods of joining are important technologies. Two features of metallic honeycomb sandwich that make it attractive for Earth-to-orbit transports are low conductivity at cryogenic temperatures and high conductivity at entry temperatures (Fig. D-3). At cryogenic temperatures, the honeycomb core acts as both wall stabilizer and insulator. At elevated temperatures, effective thermal conductivity is high, and thermal gradients across the sandwich and, therefore, thermal stresses during entry are minimized. For this latter reason, honeycomb sandwich makes a good outer surface for a thermal protection system as well as for a wall on an unprotected tank. The exponential increase in conductivity versus temperature for honeycomb sandwich is due to heat transfer by radiation, which is a function of absolute temperature to the fourth power. On the other hand, the metal and gas conductivity terms vary nearly linearly with temperature and become less significant as temperature increases. An underlying issue for honeycomb sandwich construction is the concern that the covers of the sandwich may separate when heated if a liquid or gas has been injested into the honeycomb core. The circumstances of design and installation under which this might occur need to be further investigated.

Not evident in the technological and configurational factors listed in Tables I and II is the overall weight savings potential through the reduction of power consumption by the use of advanced avionics. Also not evident is the weight reduction which occurs through the use of electric rather than hydraulic actuators. Much of the savings is the large reduction in prime power and cooling requirements. These potential savings might be referred to as subsystem interrelational factors and only become evident when the vehicle is sized.

Also not included in this report is the weight savings potential through the reduction in residual, reserve, and unusable fluids. These fluids constitute approximately 1 percent of the vehicle weight at main engine cutoff for the Shuttle-ET combination. Some reduction in the weight of these fluids should be possible through lessons learned from Shuttle flights and through the use of new techniques in fluid management such as the transfer of unused fluids in one system for use in another. (Fluids can already be transferred between the RCS and OMS systems on the current Shuttle.)

One of the most significant available areas for weight reduction by a 1992 maturity date is in structure; namely, the projections of 5.2% for technology (Table I) and 5.0% for configuration (Table II). These percentages are based on a main engine cutoff (MECO) weight of 321,000 lb. The MECO weight is derived from the seventh Shuttle flight (FLT7). For this flight, the orbiter and external tank (ET) at MECO weighed 240,000 lb and 81,000 lb, respectively, for a total of 321,000 lb. The combined technological and configurational reductions amount to a 32,000 lb savings of structure for the current Shuttle /ET combination. The savings for a single-stage dual fuel vehicle, using the same assumptions, is estimated to be 44,000 lb for a vehicle weighing 440,000 lb. at MECO.

The projected reductions are based on extensive use of composites for structure and a greatly simplified body shape. The next largest subsystem weight is the propulsion system, but the emphasis for this subsystem is on performance and margins, leaving little opportunity to obtain net weight reductions.

Because of the high cost per pound of payload to orbit, every pound of weight saved is important. The counter issues to this argument are the possible increases in development, manufacturing, and operating costs brought about by the innovative weight savings features.

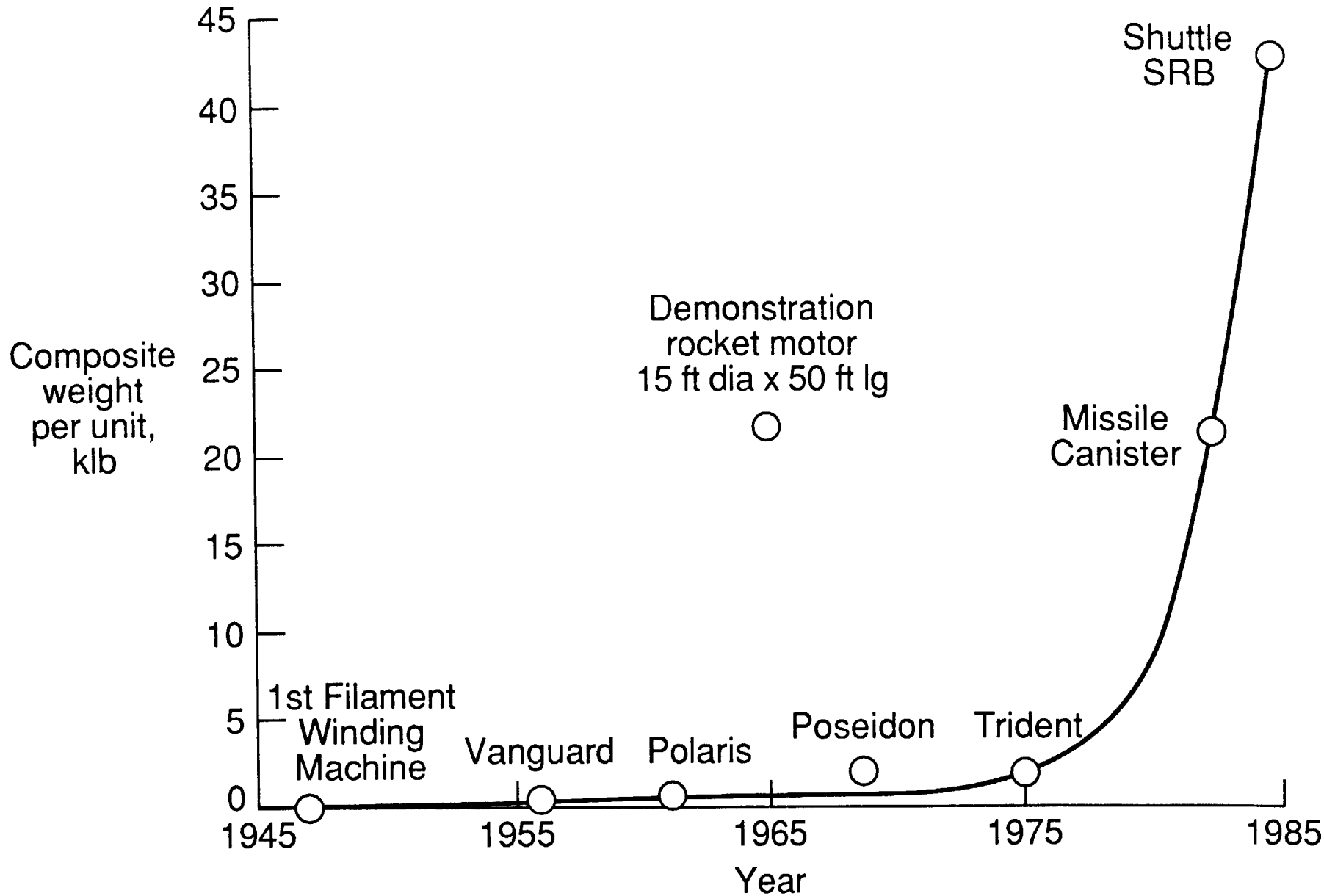

Figure D.1 Usage of filament wound composites in rocket motors.

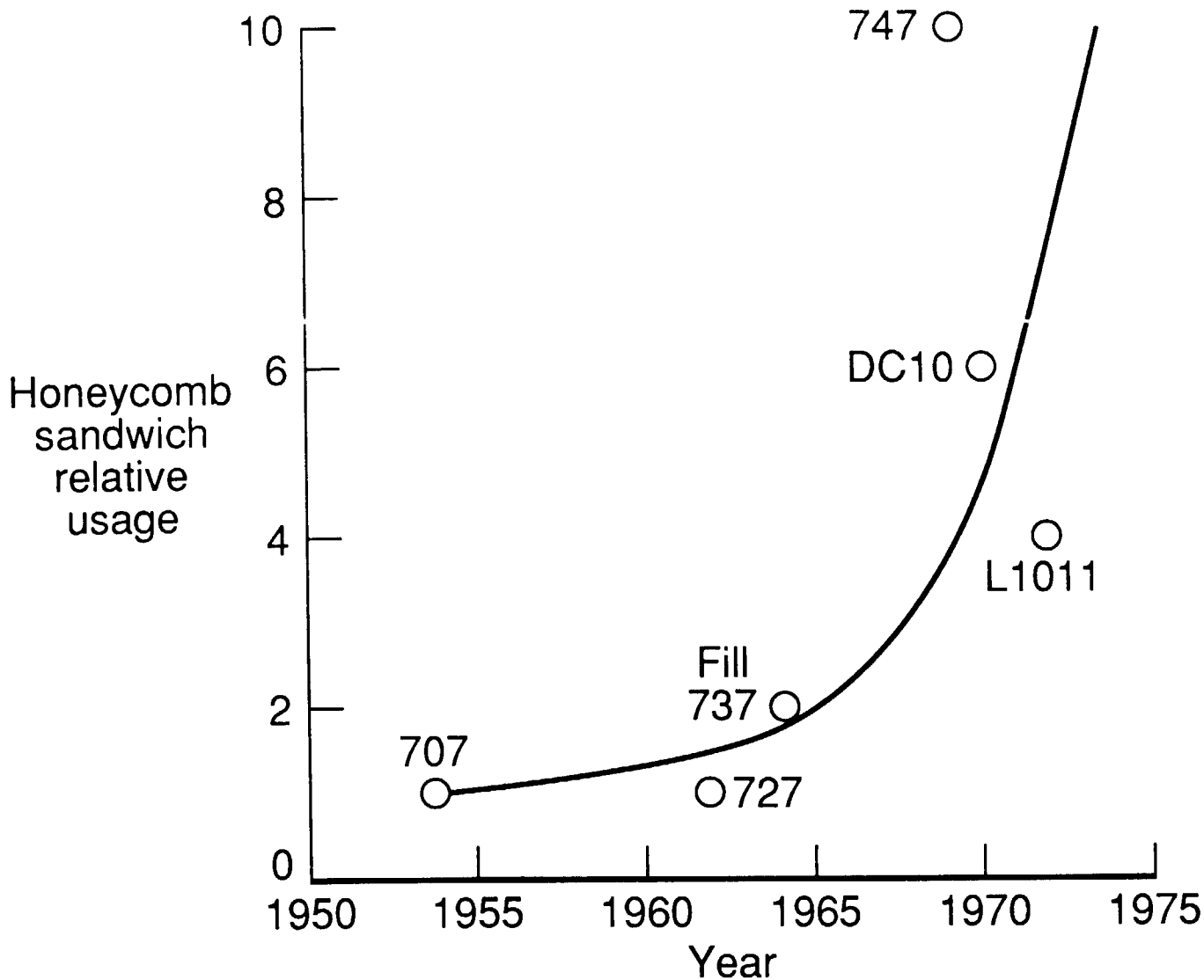

Figure D.2 Relative usage of honeycomb for aircraft versus year.

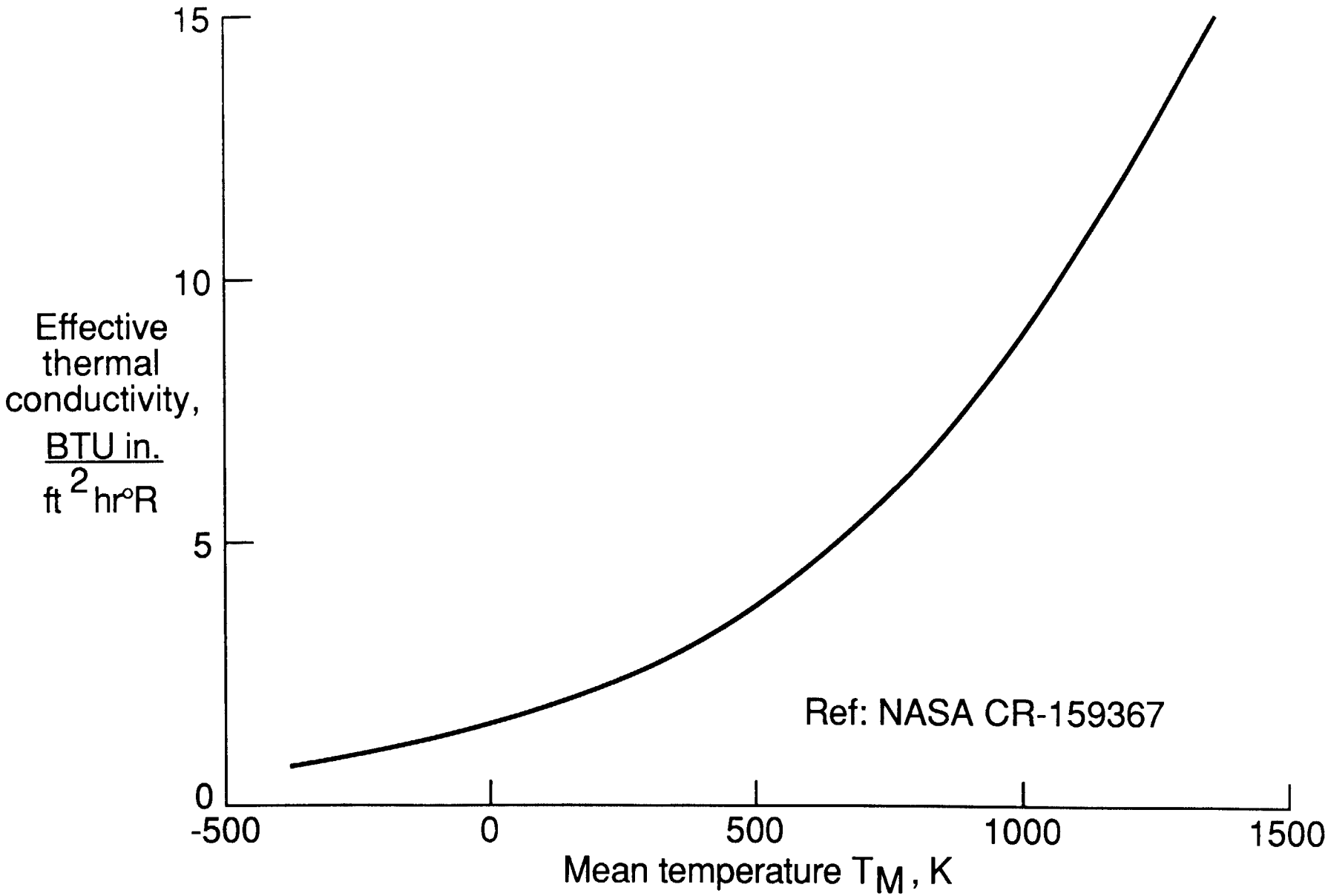

Figure D.3 Effective thermal conductivity of René honeycomb panels.

Table I
Summary of Technology Factors
Shuttle-to-Shuttle II Predictions (1992 Maturity date)

Projected Weight Reduction

Subsystem	% of Corresponding Shuttle Orbiter Subsystem Weight	% of MECO Weight	Comments
1.0 Wing Group	30	1.5	Composite
	44	2.2	Composite plus adv. constr.
2.0 Tail Group	30	0.3	Composite
	44	0.4	Composite plus adv. constr.
3.0 Body Group			
Shell	32	5.2	Composite plus adv. constr.
Tanks	-10	-1.4	Composite plus reusability
4.0 Thermal Protection	36	5.0	Combination of lessons learned plus advanced design
5.0 Landing Gear And Aux. Systems	9	0.2	Partial composite substitution
6.0 Propulsion, Ascent	15	1.4	Composites for selected metallic components
7.0 Propulsion, RCS	0	0	Increased performance using cryogenics but no hardware weight savings
8.0 Propulsion, OMS	0	0	Same as for 7.0
9.0 Prime Power	52	0.6	Batteries for APU's plus fault tolerant design
10.0 Elec. Conversion and Distribution	18	0.6	Advanced distr. systems (20 kHz)
11.0 Hydraulic Conversion and Distr.	20	0.1	8,000 versus 3,000 psi system
12.0 Surface Controls	20	0.2	Electrical for mechanical actuators
13.0 Avionics	50	0.1	LED displays, fault tolerant systems, etc.
14.0 Environmental Control	10	0.1	Lessons learned plus advanced technology
15.0 Personnel provisions	0	0	Mission and configurational

Table II
Summary of Configuration Factors
Shuttle-to-Shuttle II Predictions

Projected Weight Reduction

Subsystem	% of Corresponding Shuttle Orbiter Subsystem Weight	% of MECO Weight	Comments
1.0 Wing Group	20	1.0	Control configured
2.0 Tail Group	40 to 70	0.3 to 0.6	Control-configured design; dorsal or tip fins for tail
3.0 Body Group			
Shell	40	5.0	Simple cross section
Tanks	15	2.1	Simple cross section
4.0 Thermal Protection	15	1.3	Limit vehicle to low cross-range
5.0 Landing and Aux. Systems	16	0.4	Eliminate remote manipulator system
6.0 Propulsion Ascent Propulsion,	-15	-1.4	Derated engines for increased thrust margins
7.0 Propulsion, RCS	0	0	Cryogenic for storables
8.0 Propulsion, OMS	0	0	Use RCS for OMS*
9.0 Prime Power	20	0.2	Reduced mission time and crew
10.0 Elec. Conversion and Distribution	30	1.0	Lower power requirements
11.0 Hydraulic Conversion and Dist.	20	0.1	Control-configured design
12.0 Surface Controls	20	0.2	Control-configured design
13.0 Avionics	10	0.2	Reduced crew size, displays, etc.
14.0 Environmental Control	60	1.0	Eliminate freon system for 72-hr mission
15.0 Personnel Provisions	40	0.2	Reduce or eliminate food, waste, and water mgt. systems for short duration missions

*Not a viable option if total maneuver impulse required is large because of the relatively low efficiency of RCS engines compared to an OMS system.

Summary Remarks

Weight reductions for Shuttle II subsystems are projected using the present Shuttle Orbiter and External Tank as a baseline. Potential savings are categorized as related to technology or configuration. The weight savings projected for a 1992 technology maturity date vary widely from subsystem to subsystem, but the greatest potential for overall reduction in the vehicle weight appears to be in the body shell and thermal protection systems. Weight reductions are projected in the body shell through simplified configuration and high technology materials and fabrication methods, and in the thermal protection system, through lessons learned and the ability to selectively reduce thermal protection system thickness. No substantial weight savings are projected for main propellant tanks for the 1992 maturity date principally because of the reusability feature required and the lack of research in large tanks to support any projections for weight reduction. Also, no substantial weight savings are projected for main rocket engines partly because of the increased performance margins being required. Some weight reductions are projected for other subsystems, but the overall savings are small because of the relatively small size of most of the subsystems when compared to the total vehicle weight.

Strong advocacy is given for the further development of honeycomb for airframes, heat shield elements, and propellant tank walls. Filament winding and pultrusion manufacturing methods, using composites, are also strongly advocated in order to achieve the weight goals for a Shuttle II. These technologies are considered favorable in that they are projected to be mature enough by 1992 for use in primary and secondary structures. The extensive use of honeycomb sandwich construction in the current Shuttle Orbiter is cited as a basis for its more extensive use in Shuttle II.

When all the technology factors are summed, the projected weight reduction is approximately 16 percent of the vehicle weight at main engine cutoff. When the configurational factors are summed, the projected weight reduction is 12 percent. In reality, the projected weight reductions are greater for the following reasons: Firstly, the projected reductions in weight do not include potential savings by employing a scavenging system to recover otherwise unusable fluids. The potential for weight reduction is an additional 2 percent of vehicle weight based on and assumption of 60 percent recovery of the fluids present, but unused, at main engine cutoff. Secondly, the 16 and 12 percent figures for technology and configuration factors become 18 and 13.5, respectively, at engine cutoff if the weight of the payload is not included. Thirdly, the overall reductions projected are the result of algebraic addition of savings for each subsystem. When the individual reductions are combined in a computer driven sizing program, the overall reductions are even greater because of the beneficial effect of the weight reduction of one subsystem on the other subsystems. Based on the above, a savings of 20 to 25 percent is considered achievable through the application of technologies available by 1992. The savings through configuratio[redacted]he percentage reduction depending upon the extent t[redacted]nd other subsystems are simplified or reduced in capacity.

1. Report No.	2. Government Accession No.	3. Recipient's Catalog No.
NASA TM-89114		

4. Title and Subtitle	5. Report Date
Shuttle To Shuttle II: Subsystem Weight Reduction Potential (Estimated 1992 Technology Readiness Date)	May 1988
	6. Performing Organization Code
7. Author(s)	8. Performing Organization Report No.
Ian O. MacConochie	
9. Performing Organization Name and Address	10. Work Unit No.
NASA Langley Research Center Hampton, VA 23665-5225	906-65-05-01
	11. Contract or Grant No.
12. Sponsoring Agency Name and Address	13. Type of Report and Period Covered
National Aeronautics and Space Administration Washington, DC 20546-0001	Technical Memorandum
	14. Sponsoring Agency Code

15. Supplementary Notes

16. Abstract

The objective of this study was to make estimates of the weight savings that might be realized on all the subsystems on an advanced rocket-powered Shuttle (designated Shuttle II) by using advanced technologies having a projected maturity date of 1992. The current Shuttle with external tank was used as a baseline from which to make estimates of weight savings on each subsystem.

The subsystems with the greatest potential for weight reduction are the body shell and the thermal protection system. For the body shell, a reduction of 5.2 percent in the weight of the vehicle at main engine cutoff is projected through the application of new technologies, and an additional configuration-based reduction of 5 percent is projected through simplification of body shape. A reduction of 5 percent is projected for the thermal protection system through experience with the current Space Shuttle and the potential for reducing thermal protection system thicknesses in selected areas. Main propellant tanks are expected to increase slightly in weight. The main propulsion system is also projected to increase in weight because of the requirement to operate engines at derated power levels in order to accommodate one-engine-out capability. The projections for weight reductions through improvements in the remaining subsystems are relatively small. By summing all the technology factors, a projected reduction of 16 percent in the vehicle weight at main engine cutoff is obtained. By summarizing the configurational factors, a potential reduction of 12 percent in vehicle weight is obtained.

17. Key Words (Suggested by Author(s))	18. Distribution Statement
Shuttle Weights Reduction Potential	[redacted] Subject Category 16

ORIGINAL PAGE IS
OF POOR QUALITY

19. Security Classif. (of this report)	20. Security Classif. (of this page)	21. No. of Pages	22. Price
Unclassified	Unclassified	53	