Metal Matrix Laminate Tailoring (MMLT) Code:

User's Manual

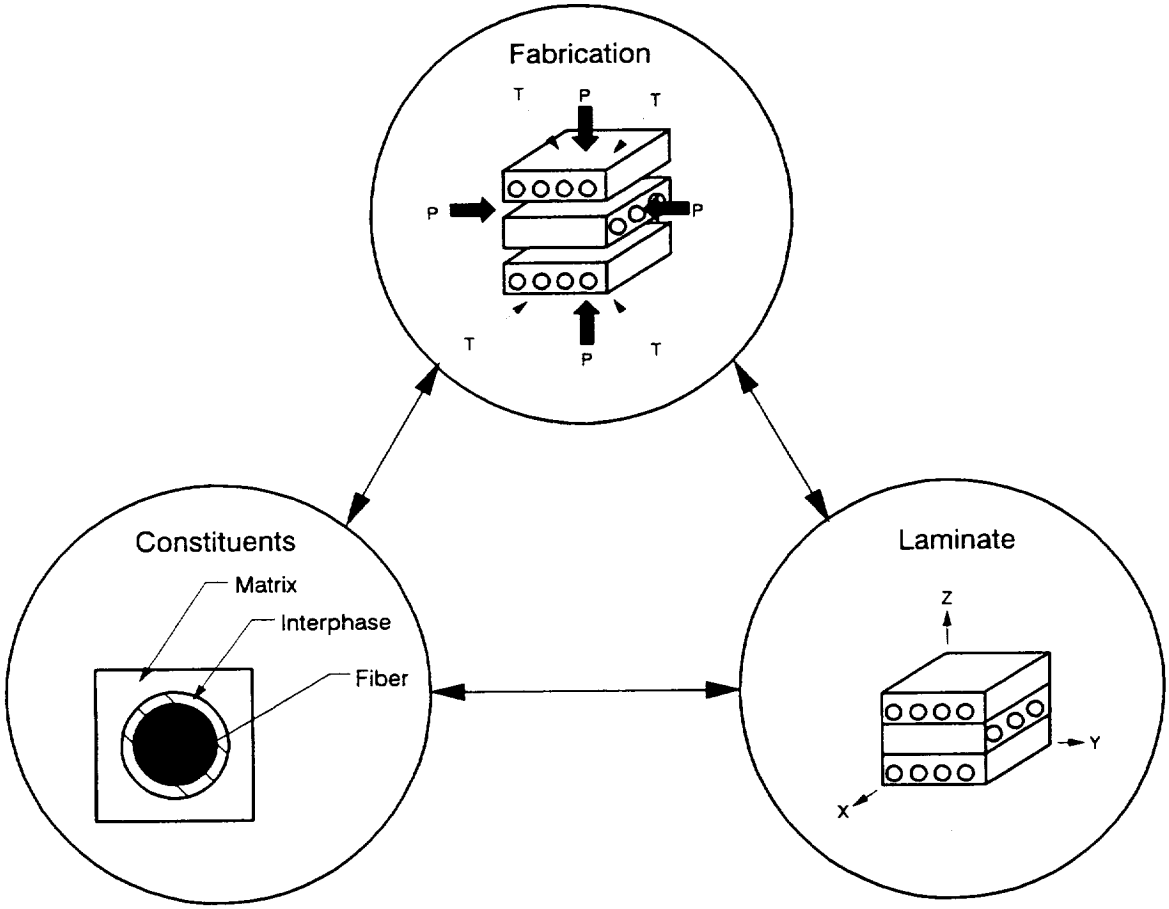

Prepared by:

M. R. Morel
Sverdrup Technology, Inc.
Lewis Research Center Group

D. A. Saravanos
Ohio Aerospace Institute

and

P. L. N. Murthy
NASA Lewis Research Center

Preface

This report is the User's Manual for the Metal Matrix Laminate Tailoring (MMLT) program. The code is capable of tailoring the fabrication process, constituent characteristics, and laminate parameters (individually or concurrently) for a wide variety of metal matrix composite (MMC) materials, to improve the performance and identify trends or behavior of MMCs under different thermo-mechanical loading conditions. This document is meant to serve as a guide in the use of the MMLT code. Detailed explanations of the composite mechanics and tailoring analysis are beyond the scope of this document, and may be found in the references. MMLT has been developed by the Structural Mechanics Branch at NASA Lewis Research Center (LeRC).

Please note that the MMLT code is being made available strictly as a research tool. Neither NASA LeRC, nor any contractors, nor grantees that have contributed to the code development, assume liability for application of the code beyond research needs.

Any questions or related items concerning this computer code can be directed to Dr. P. L. N. Murthy at the NASA LeRC, Cleveland, OH 44135 or call (216) 433-3332.

TABLE OF CONTENTS

PREFACE i

TABLE OF CONTENTS ii

Part I - INTRODUCTION

1.1 Scope 1.1-1

1.2 MMLT Overview 1.2-1

1.3 MMLT Input Example 1.3-1

1.4 MMLT Flowchart 1.4-1

1.5 MMLT Geometric Conventions 1.5-1

1.5.1 Global Coordinate System 1.5-1
1.5.2 Local Coordinate System 1.5-1
1.5.3 Ply Ordering Convention 1.5-1
1.5.4 Ply Angle Orientation 1.5-1
1.5.5 Loading Conventions 1.5-1

1.6 MMLT Input/Output File Structure 1.6-1

Part II - MMLT INPUT PREPARATION

2.1 General Description 2.1-1

2.2 MMLT Data Deck 2.2-1

2.2.1 Fabrication Process and Thermal-Mechanical Loading . . 2.2-4
2.2.2 Material and Laminate Identification 2.2-15
2.2.3 Design Variables and Constraints 2.2-19
2.2.4 Optimization Parameters and Objective Function 2.2-27

TABLE OF CONTENTS

2.3 Sample Input Data Files 2.3-1

2.3.1 Case 1: $[0/90]_{2s}$ Graphite/Copper 2.3-1
2.3.2 Case 2: $[\pm 45]_s$ Silicon Carbide/Titanium 2.3-7

Part III - PROCEDURE TO RUN MMLT

3.1 Introduction 3.1-1

3.2 Run MMLT on the VAX 3.2-1

3.3 Run MMLT on the Cray X-MP 3.3-1

3.4 Run MMLT on the Convex 3.4-1

Part IV - REFERENCES

Part V - APPENDICES

Appendix A: Nomenclature A-1

Appendix B: Constituent Databank B-1

B.1 Fiber Entries B-3
B.2 Matrix Entries B-15
B.3 Interphase Entries B-31

INTRODUCTION

1.1 Scope

Future advancements in the propulsion and aerospace industry require a dramatic extension in materials and processing technology. Current research and development suggest that metal matrix composites (MMCs) will be essential in meeting performance goals in civil transport systems that require increased fuel economy, improved reliability, extended life, and reduced operating costs. However, there is a demand to generate the technology needed that will enable the development of MMCs to meet these lofty goals. MMLT (Metal Matrix Laminate Tailoring) is a Fortran computer code, developed at NASA Lewis Research Center to aid the researcher in producing some of the technology required to advance the fabrication, selection, and tailoring of MMCs as functional materials in the design of high temperature engine components.

Through computational simulation of the current fabrication process and thermo-mechanical (TM) loading, the MMLT code is capable of tailoring the fabrication process, material characteristics, and laminate parameters, individually or simultaneously, for MMCs. By tailoring these parameters the user has the ability to: control the microstresses during fabrication [Reference 1] and subsequent TM loading [Reference 2]; control the development of mechanical properties and micromechanical parameters at the constituent, ply, and laminate level; and improve the TM load carrying capacity of the fabricated composite [Reference 1-2].

The basis of the MMLT code encompasses two computer codes, METCAN (METal matrix Composite ANalyzer) [Reference 3] and the ADS optimizer [Reference 4-5]. To capture the nonlinear behavior of a MMC during fabrication and the subsequent TM loading, nonlinear composite mechanics are used as encoded in METCAN. The composite mechanics include effects of the elevated temperature, the nonlinear response of the constituent materials, and the residual stress build-up during fabrication and TM loading. In order to handle the multifarious optimization problem, the tailoring of the MMC is formulated as a nonlinear programming problem and is solved with the feasible directions method. By taking advantage of the unique capabilities of these two methods, the foundation of the MMLT code has been formed.

MMLT provides the unique feature to either simulate or tailor the complex behavior of MMCs from its fabrication process through its in-service life by considering several design parameters simultaneously. The potential user will be able to determine trends for fabrication and composite parameters before expensive experimental investigations are begun. Also, further insight of the material system under different loading conditions can be quantified. Results from the MMLT package can be used in the design and analysis of composite structures by tailoring both the fabrication process, constituent parameters, and laminate characteristics for specific requirements. However, the potential user of MMLT is reminded that the program is in an evolutionary state and the methodology which MMLT comprises is of an on-going nature.

The remaining sections of Part I include a brief background description of MMLT (which includes most of the assumptions and limitations pertaining to this code), an example input file with instructions, presentation of the geometric conventions used, and input/output files employed and produced by MMLT. Part II contains a detailed description of the command names needed to create a data file that can be executed by the MMLT code. Also, Part II has two example data files to aid the user in creating their own input files. Part III explains the procedures required to execute the MMLT code after the data file has been created on either the VAX, Cray X-MP, or Convex computer systems which are available at NASA Lewis Research Center.

1.2 MMLT Overview

In order to understand the motivation behind the MMLT code, a brief background is presented so that the user can apply the methodology to enhance the performance of the material. The objective of this section, therefore, is to identify existing problems within MMCs, present the physical model used in the simulation, and describe the methodology used to simulate and tailor the complex behavior of MMCs.

Applications of MMCs are becoming a more viable solution for high material property demands in terms of high temperature operation, high modulus, strength, hardness, conductivity, dimensional stability, and low density, but MMCs still have not reached their full potential because of a lack of technology. Furthermore, extensive experimental investigations are prohibitive in time and cost, as a result, it is advantageous to have computational schemes which can simulate the behavior of MMCs as a viable alternative to rigorous experimental investigations. This will also minimize the number of experiments to be performed by eliminating unwanted candidate MMCs. The MMLT code was developed to tailor the fabrication process, interphase layer characteristics, and laminate parameters, either individually or concurrently, in order to improve the thermo-mechanical performance and extended the service life of MMCs. The code can be used to develop trends and lend insight into the impact of different tailorable parameters for MMCs so that the overall performance can be improved.

Significant problems exist within MMCs, for example, the presence of residual stresses in the composite and the interfacial bonding conditions between the fibers and matrix. The residual stresses are developed during cool-down in the fabrication phase because of the mismatch in the coefficients of thermal expansion (CTE) between the fiber and matrix. In composite laminates, additional residual stresses are developed because of differences in the CTE between plies. Depending on the properties of constituents, the fiber volume ratio, and the temperature differential involved, the residual stresses may reach critical magnitudes which degrade the mechanical properties and thermo-mechanical (TM) load carrying capacity of the composite. This may even cause local damage, such as matrix cracking, fiber debonding, and degradation of the constituent properties. Therefore, the development of residual stresses is crucial to the performance of many MMCs.

Although these critical residual stresses exist within MMCs, it is very possible to control them by: (1) altering critical fabrication parameters, such as processing temperature and pressure histories; (2) incorporating a compatible interphase layer between the fibers and the matrix; (3) modifying laminate parameters, such as fiber volume ratio and ply orientation. Candidate design variables include temperature and pressure histories of the fabrication process; the characteristics of a candidate interphase layer, such as, the modulus, CTE, strength, and layer thickness; and laminate parameters, such as the fiber volume ratio, ply thickness, and ply angles. The user is able to control the build-up of microstresses

during fabrication and subsequent TM loading through stress constraints, while ensuring the integrity of the tailored MMC by avoiding failure at the constituent, ply, and laminate levels. Also, improvements in the mechanical properties of the tailored composite and an increase in the load carrying capacity of a MMC system can be achieved.

A typical thermo-mechanical life cycle of a MMC laminate is schematically shown in Figure 1.2-1. The laminate is fabricated consolidating the raw materials at an elevated temperature followed by gradual cooling to room conditions. Consolidation pressure is applied to diffuse and bond the matrix with the fibers. The combination of temperature and pressure during fabrication results in a hot isostatic pressing (HIP) process. The residual microstresses are developed during the cool-down consolidation phase of the fabrication process.

The composite behavior during fabrication and TM loading is computationally simulated with incremental nonlinear composite mechanics [Reference 3]. The composite mechanics include inelastic, thermal and residual stress buildup effects on the constituent, lamina, and laminate levels. In this manner, the procedure provides more accurate predictions and is able to capture the coupling between the fabrication process, interphase layer characteristics, and laminate parameters. The mechanics incorporate a multi-cell model packed in a square array. An idealization of a single unit cell is shown in Figure 1.2-2 with the three material phases available; fiber (f), matrix (m), and an optional interphase (d).

For the optimization, the ADS optimizer [Reference 4-5] is used. A constrained nonlinear programming (feasible directions) method is utilized to minimize an objective function, F(**Z**). The problem solved, in the most general form, is:

Minimize F(**Z**)

Subject to constraints of the following form:

$$\mathbf{Z}^L \leq \mathbf{Z} \leq \mathbf{Z}^U$$

$$Q(\mathbf{Z}) \leq 0$$

The design variables are represented by the vector **Z**, with U and L indicating the upper and lower bounds. Also, Q(**Z**) are inequality performance constraints. The feasible domain is defined by the last two equations with a one dimensional search being performed. Scaling and normalization of the design variables, objective function, and constraints are all done internally in order to improve the efficiency, reliability, and the ease-ability to the user. For further information on the ADS optimizer the user is referred to the references [4-5].

Displayed in Figure 1.2-3 is the modular format of the MMLT code. A user friendly input format is provided to the user. After input is read in, a readable METCAN file is

created from the MMLT. In turn, the analysis of the composite is performed using composite micromechanics and laminate analysis. The results from the METCAN module are used to calculate the material performance measures needed by the ADS optimizer module. Upon completion of the optimization, output files are provided to the user.

Figure 1.2-1: Typical Fabrication and thermo-mechanical loading of metal matrix laminates

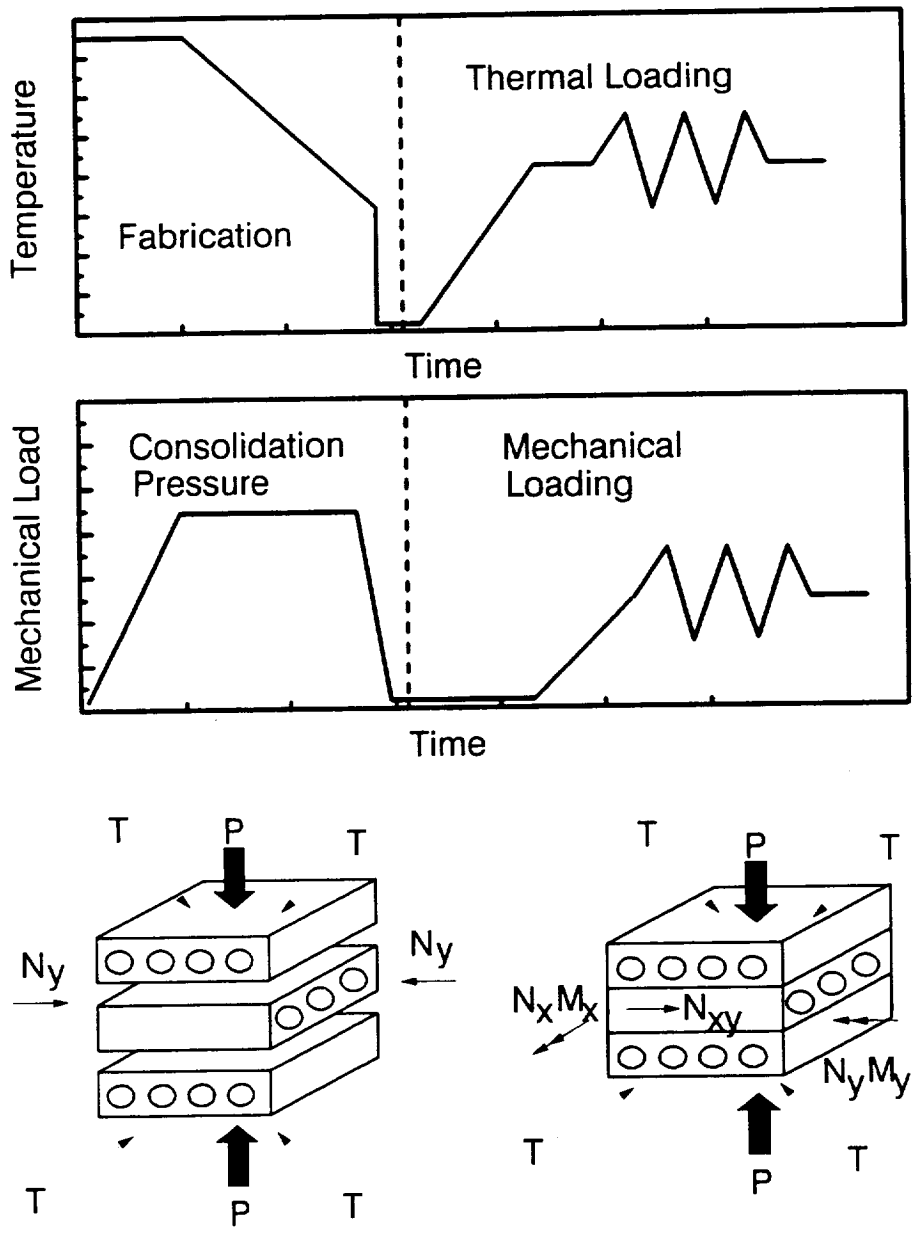

Figure 1.2-2: Idealization of metal matrix composite unit cell

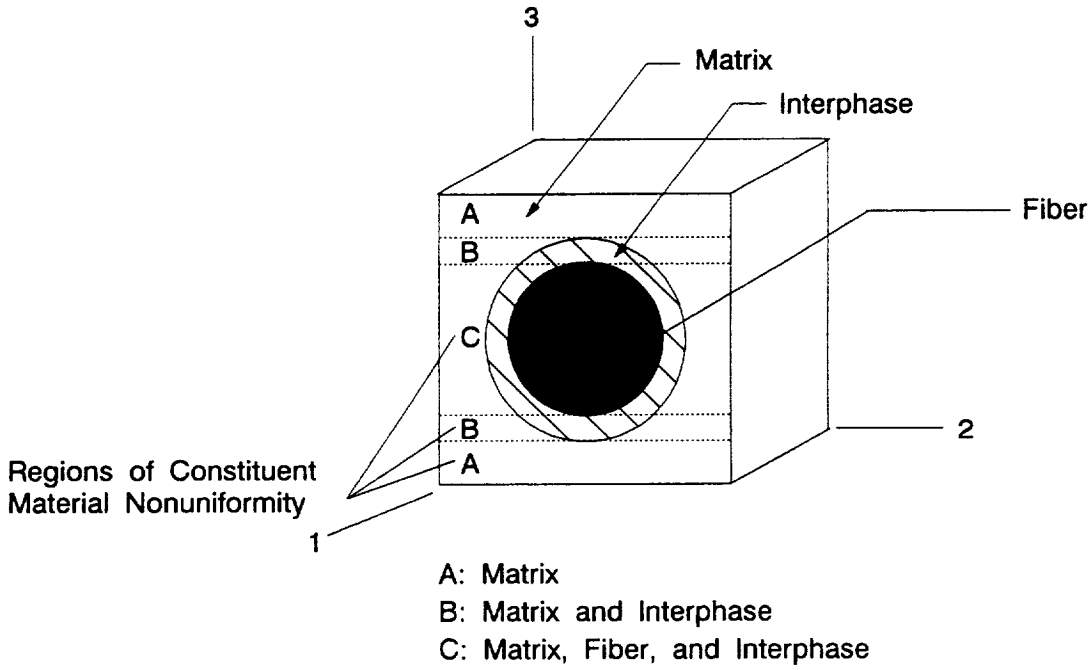

Figure 1.2-3: Modular Structure of MMLT

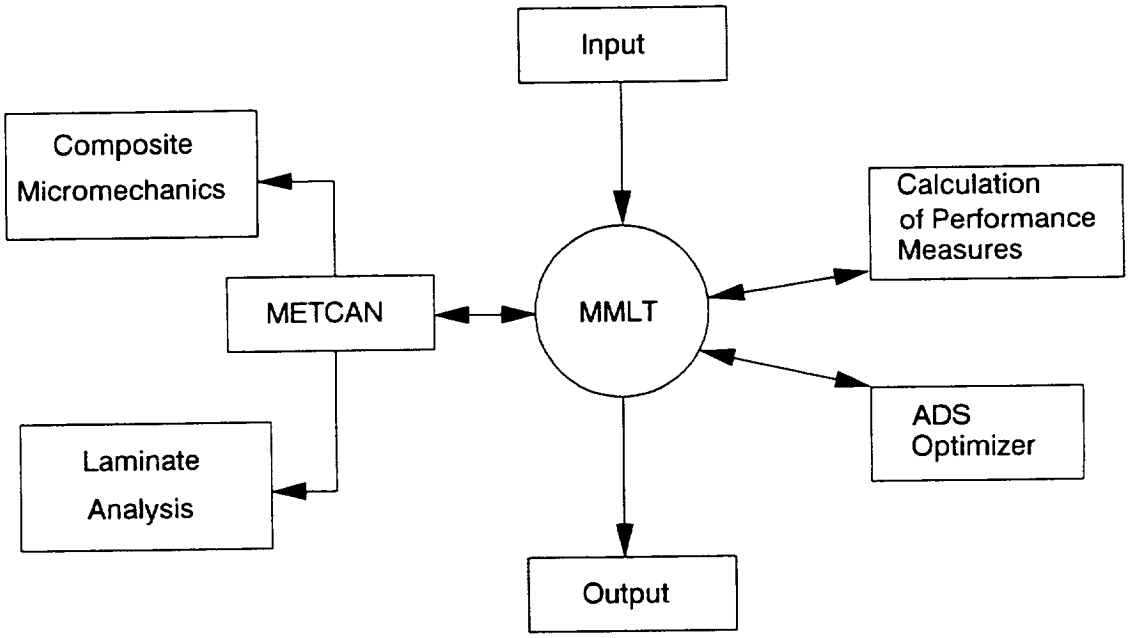

1.3 MMLT Input Example

A sample case with a step by step description of the procedure (Table 1.3-1) required to prepare MMLT input data file (Table 1.3-2) is provided in this section. The objective of this example case is to tailor the fabrication process for a unidirectional graphite (P100)/copper (Cu) MMC in order to reduce the longitudinal and transverse matrix microstresses at the end of fabrication. These high stresses may cause degradation in the composite properties, fiber debonding, and reduce the thermo-mechanical fatigue life. Therefore, it may be beneficial to control these stresses during fabrication.

Current temperature and pressure histories are shown in Figures 1.3-1a and 1.3-1b. A total of 5 load history points (i.e., the control points defining the temperature and pressure history) are needed to simulate the fabrication process and the five points are marked with their appropriate coordinates. As a result, four entries are needed for the subincrements (the number of steps between the load history points), eg. from point one to point two is the first entry of the subincrement, from point two to point three a second entry of the subincrement is needed and so forth. Each designated point on the plots is a design variable except for the consolidation and room temperatures (the first and final temperatures) and the final pressure which is set to zero. Since the build-up of residual stresses and the integrity of the composite material are primarily affected by the temperature and consolidation pressure histories only the cool-down phase of the fabrication process is simulated [Reference 1].

The fiber volume ratio (FVR) is 40%, no voids are present, the ply thickness is 0.04 in., and a perfect bond (no interphase) is assumed between the fiber and matrix. Stress constraints (the current stress is greater than the current compressive strength and less than the tensile strength at any time during the fabrication) on the fiber and matrix are activated throughout fabrication. This ensures the integrity of the tailored MMC by avoiding failures at the micro-level.

The individual steps, along with the corresponding line numbers in the example input data file (refer to Table 1.3-2), that are required to model this problem are presented in Table 1.3-1. The temperature and pressure load histories are taken from Figures 1.3-1a and 1.3-2b. Line numbers are provided in the sample input deck for reference purposes only and are not part of the input file.

Table 1.3-1: Procedure in Preparing an Input Data File

Step No.	Line No.	Description of Data
1	1	Use a comment, "$", record to describe the input file, optional.
2	2	Use the 'PROCESS' record to indicate the load history points (5 control points), which define the temperature and pressure histories in Figures 1.3-1a and 1.3-1b. Also the number of steps (subincrements) between the linear segments of the load history. The number of entries of subincrements is one less than the number of control points defining the load history. For example, from control point one to control point two the first entry for the subincrement is six, i.e. there are six steps between the first linear segment designated by control points one and two.
3	3	Use the 'TIME' record to specify the time range at each control point over the entire process. A numerical label is placed in the 4th field preceded by the mnemonic record and two blank fields. A total of 5 points are needed to match the load history points in the PROCESS record.
4	4	Use the 'TEMPR' record to specify the temperature history during the cool-down phase of fabrication. Refer to Figure 1.3-1a for the current values at each control point.
5	5	Use the 'PRESR' record to specify the pressure history during the cool-down phase of fabrication. Refer to Figure 1.3-1b for the current values at the corresponding control points.
6	6	Use the 'NY' record to specify the transverse applied force at each load segment. The transverse force is equivalent to the corresponding pressure value (refer to 'PRESR' record) multiplied by the laminate thickness (refer to the 'MATERIAL' record). This is used to simulate the hot isostatic pressing of the fabrication process.
7	7	The 'LAY-UP' record defines the order of the ply lay-up by a user supplied name. In this example the composite is unidirectional, thus, only one ply (PLY1) is defined.
8	8	Use the 'MATERIAL' record to define the material of the ply matching the name (PLY1) given in the 'LAY-UP' record. Additional data in this record are the fiber and matrix code names used to retrieve the constituent material properties from the databank. For the graphite fiber use P100 and COPR for the copper matrix, the FVR (0.40), the interphase thickness (0.0) as a percent of the fiber diameter, the ply thickness (0.04), and the fiber orientation angle (0.0).

Step No.	Line No.	Description of Data
9	9-15	Use the 'VARIABLE' record to define all design variables individually by assigning a user supplied name (e.g., TEMP2), the corresponding variable number (e.g., 2 for variable TEMP3) in increasing order, the position of variable in the global design vector (refer to Table 2.2-1 in Section 2.2.3 pg. 2.2-21), the lower bound, the upper bound, and the initial value of the design variable. For this example there are seven design variables, three temperature and four pressure values.
10	16-19	Use the 'DEPEND' record to define the four dependent design parameters to the pressure design variables defined in the previous record. This defines the consolidation pressure in the y direction required by the fabrication process to consolidate the composite. A user supplied name is given for each parameter and the position in the storage vector is given from Table 2.2-1 in Section 2.2.3. The storage position of the design variable that the dependent design parameter is linked to, is also given. Finally, a ratio to the design variable is defined.
11	20-37	Use the 'CONSTRNT' record to define the constraints by assigning the user supplied name (e.g. SF11C), multiplication factor (1.0), equation form of the constraint (e.g. 1, refer to Table 2.2-2 in Section 2.2.3 pg. 2.2-24), type of constraint (e.g. 0, nonlinear inequality constraint), and location of constraint in the storage array, two entries are used to specify the beginning and end point within the storage array, refer to Table 2.2-3 in Section 2.2.3 pg. 2.2-25. A second record is needed, the '&CNST' mnemonic, which is an extension of the first record. This second record contains the bound needed to evaluate the constraint equation chosen by the user from Table 2.2-2.
12	38	Use the 'OPTMIZE' record to activate the optimization solution by defining the optimizer strategy (0), the optimization procedure (5), the search procedure (8), the output request (3440), the scaling indicator (1), the number of design moves (40), and the maximum number of optimization evaluations (200). Except for the last two values, all other values are default values and should be used. Consult Reference 5 for further details.
13	39	Use the 'OBJTYPE' record to specify the objective function. For this example, the longitudinal and transverse matrix microstresses are minimized, therefore, 3 is chosen as the objective function (refer to pg. 2.2-29 for a list of available objective functions).

Step No.	Line No.	Description of Data
14	40-41	Use the 'SENSE' record to indicate the stresses that are to be minimized in the objective function. Since both matrix microstresses are considered in absolute values and weighted evenly, a positive 1.0 is inserted in the proper place to activate σ_{m11A} and σ_{m22A} with 0.0s in the remaining fields to nullify the other matrix microstresses. A continuation '+' record is used, though not all matrix microstresses (a total of nine) are used in the objective function. An optional continuation card is used for completeness.
15	42	Use the '*END_INP' record to indicate the end of input.

Table 1.3-2: MMLT Sample Input

```
Line No. -------1-------2-------3-------4-------5-------6-------7-------8-------9
   1     $ Tailor the temperature and pressure histories of a [0] P100/Copper MMC.
   2     PROCESS         5       6      35      10       5
   3     TIME                           1     0.0  1800.0  3600.0  5400.0  5700.0
   4     TEMPR                          2  1500.0  1500.0  1075.0   650.0    70.0
   5     PRESR                          3     0.0 -1000.0 -1000.0 -1000.0     0.0
   6     NY                             4     0.0   -40.0   -40.0   -40.0     0.0
   7     LAY-UP    PLY1
   8     MATERIAL  PLY1  P100COPR   0.40     0.0    0.04     0.0
   9     VARIABLE  TEMP2        1     12          70.0  1500.0  1500.0
  10     VARIABLE  TEMP3        2     13          70.0  1500.0  1075.0
  11     VARIABLE  TEMP4        3     14          70.0  1500.0   650.0
  12     VARIABLE  PRES1        4    111      -25000.0     0.0     0.0
  13     VARIABLE  PRES2        5    112      -25000.0     0.0 -1000.0
  14     VARIABLE  PRES3        6    113      -25000.0     0.0 -1000.0
  15     VARIABLE  PRES4        7    114      -25000.0     0.0 -1000.0
  16     DEPEND      NY1      201    111   0.04
  17     DEPEND      NY2      202    112   0.04
  18     DEPEND      NY3      203    113   0.04
  19     DEPEND      NY4      204    114   0.04
  20     CONSTRNT  Sf22C      1.0      1      0      51      55
  21     &CNST      0.85
  22     CONSTRNT  Sm22A      1.0      1      0     151     155
  23     &CNST      0.85
  24     CONSTRNT  Sm22C      1.0      1      0     351     355
  25     &CNST      0.85
  26     CONSTRNT  Sm11A      1.0      1      0     451     455
  27     &CNST      0.85
```

```
Line No. -------1-------2-------3-------4-------5-------6-------7-------8-------9
  28     CONSTRNT  Sm11C     1.0       1       0     651     655
  29     &CNST      0.85
  30     CONSTRNT  Sf11C     1.0       1       0     751     755
  31     &CNST      0.85
  32     CONSTRNT   a11      1.0       2       0    1931
  33     &CNST      0.85
  34     CONSTRNT   a22      1.0       2       0    1932
  35     &CNST      0.85
  36     CONSTRNT   a33      1.0       2       0    1933
  37     &CNST      0.85
  38     OPTIMIZE     0        5       8    3440       1      40      200
  39     OBJTYPE      3
  40     SENSE      1.0      1.0     0.0     0.0     0.0     0.0     0.0     0.0+
  41     +          0.0
  42     *END_INP
```

Figure 1.3-1: Current fabrication process for a P100/Cu Unidirectional composite

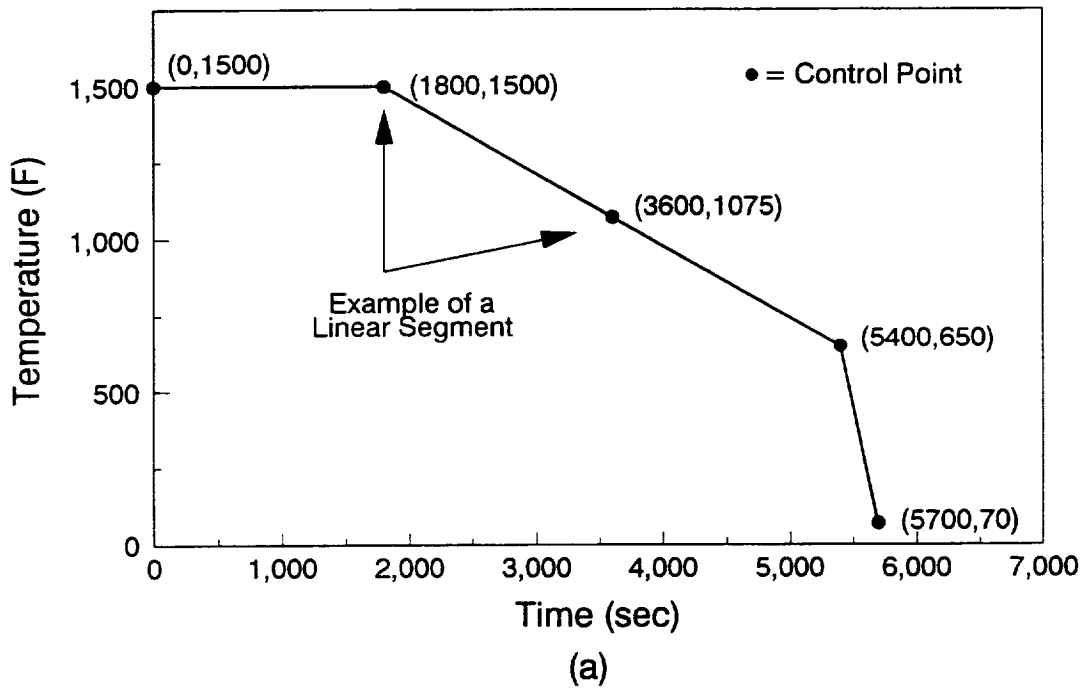

(a)

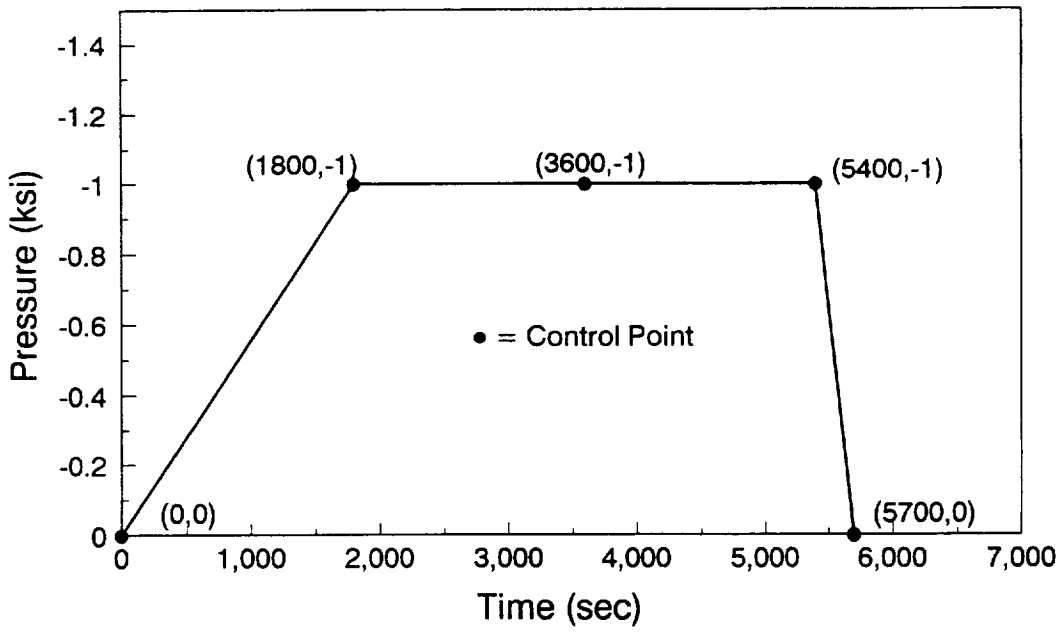

(b)

1.4 MMLT Flowchart

The computational procedure for the solution of the tailoring methodology is schematically shown in Figure 1.4-1. The input file is read to determine the fabrication process, the thermal-mechanical loads applied after fabrication, constituent properties, and ply data. Also, optimization parameters are needed, such as design variables, constraints, and designation of the objective function. The MMC model is then analyzed by METCAN to determine the response of the composite at the constituent, ply, and laminate level under the loading history. Examples of the response are the micro/macro stress histories throughout fabrication and TM loading, and material properties at the constituent, lamina, and laminate level.

The response of the composite material, during fabrication and/or after the TM load is applied, is used to calculate the objective function and constraints chosen by the user at the time of input. By considering the sensitivity of constraints and the size and location within the feasible domain, the optimizer will determine new design variables to reduce the objective function while remaining within the acceptable constraint limits and feasible region. Because of the large number of design variables and constraints used in MMLT and the nonlinearity of the problem, the method of feasible directions is used. The concept behind the method of feasible directions is to rapidly reduce the objective function while maintaining a feasible design. The sensitivity of the design (i.e. the improvement of the design variables) is linked to the objective function and constraints chosen by the user at input. If convergence between the current and new design variables and objective function are within an acceptable tolerance, the program will cease operation, if not, another iteration will be performed till an acceptable design is found. For further details on the composite response or the ADS optimizer used in MMLT, the user should refer to references [3-5].

Figure 1.4-1: Flow Chart of MMLT

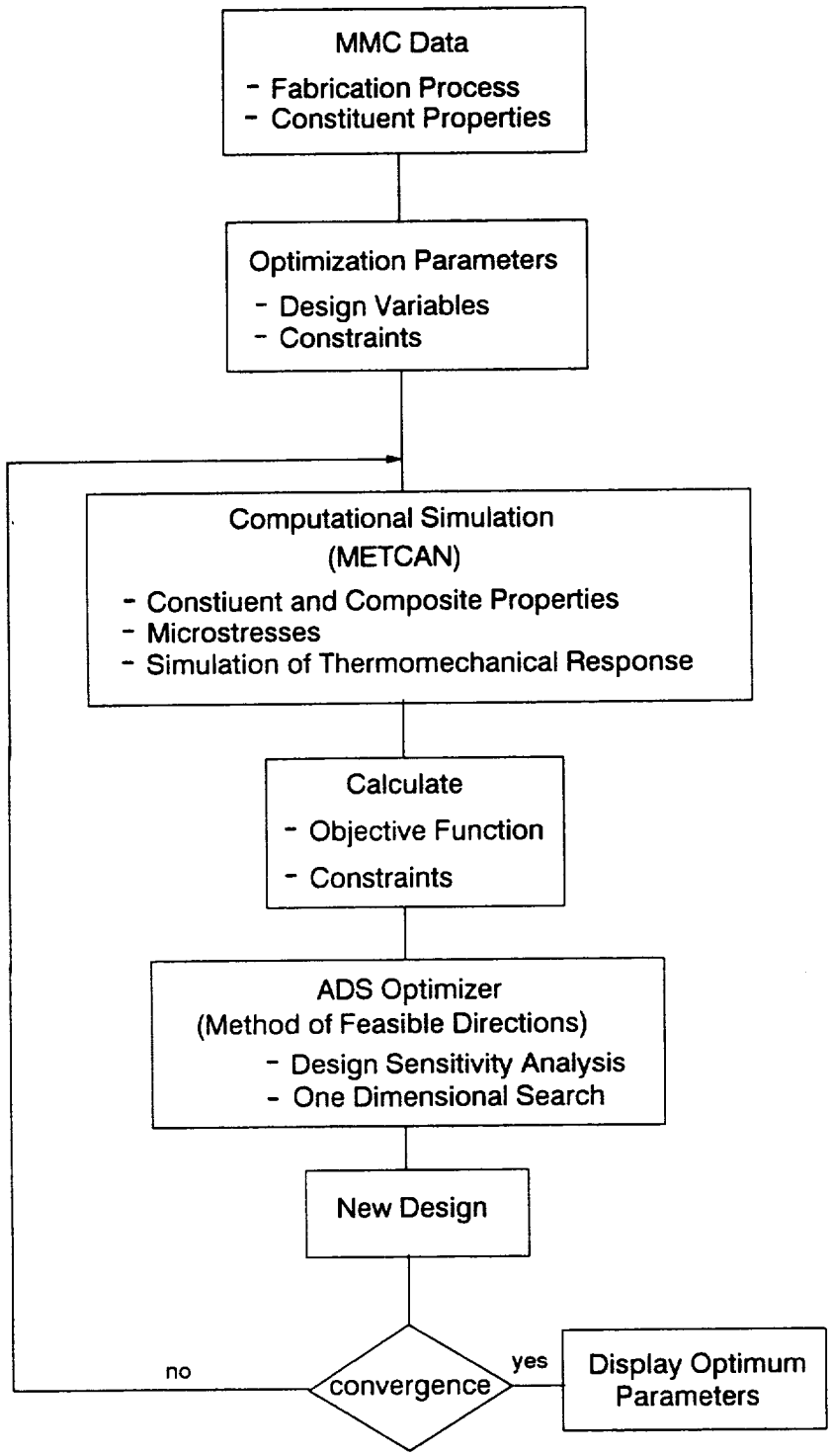

1.5 MMLT Geometric Conventions

The geometric conventions used in MMLT are similar to conventions used in the METCAN code [Reference 3], but for completeness will be repeated herein. To model the composite material, the global and local coordinate systems and the conventions for ply ordering, measuring orientation angle, and loading are presented. The English Engineering System is used throughout this manual and the example problems, but the SI units can be used if all entries are consistent, i.e. in the primary MMLT input file and the constituent databank file. Refer to Appendix A for the nomenclature and unit values used in this manual.

1.5.1 Global (Laminate) Coordinate System

For an arbitrary laminate, shown in Figure 1.5-1, the global coordinate system is defined. An unidirectional laminate has its fibers running parallel to the x-axis, whereas the y-axis is orientated perpendicular to this fiber direction, and the z-axis is orientated through the thickness of the composite.

Figure 1.5-1: MMLT Global (laminate) coordinate system

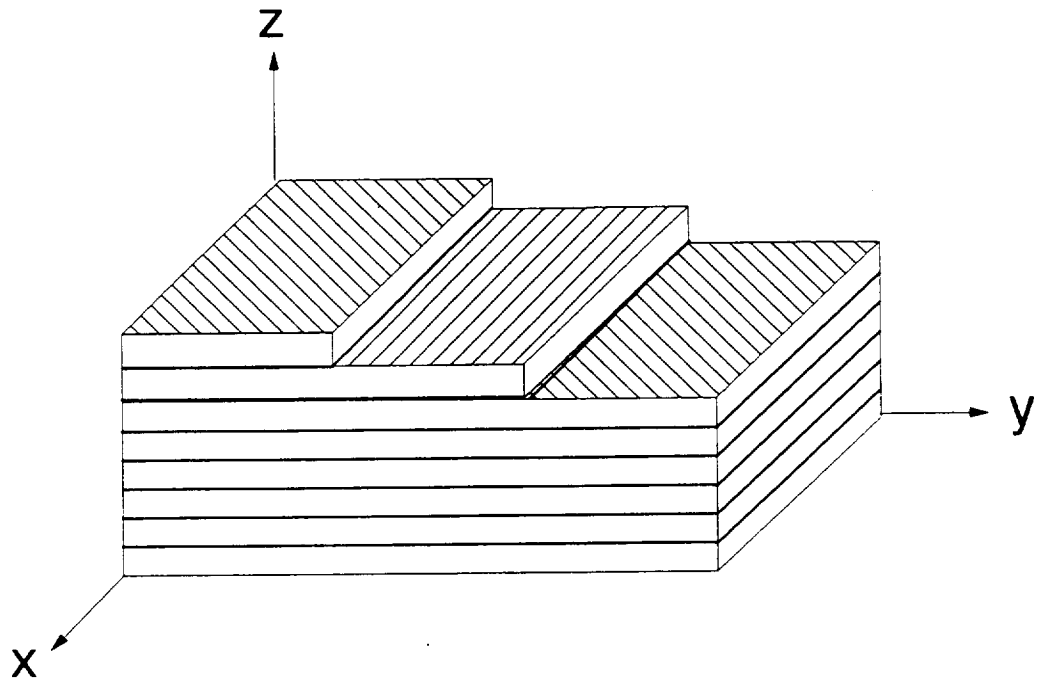

1.5.2 Local (Material) Coordinate System

The local (material) coordinate system on a composite ply is shown in Figure 1.5-2. The direction parallel to fibers is called the longitudinal direction (axis 1). The direction perpendicular to the fibers is called the transverse direction (axis 2). The direction for thickness of the ply is the 3-axis.

Figure 1.5-2: MMLT local (material) coordinate system

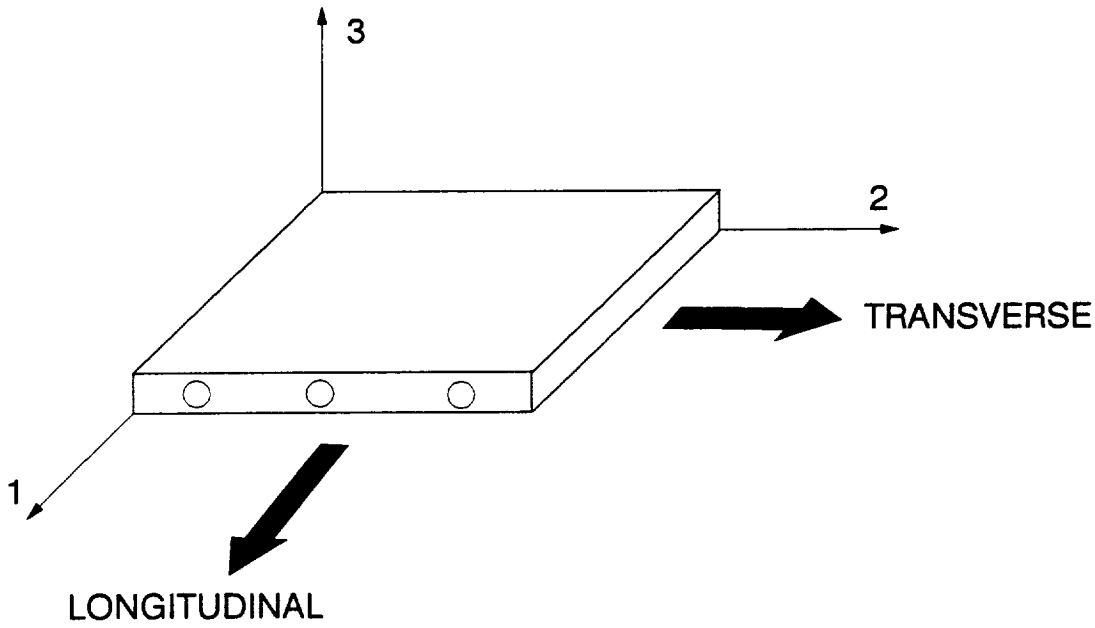

1.5.3 Ply Ordering Convention

The ordering of the plies is depicted in Figure 1.5-3. The first ply is placed at the bottom or in plane z=0. Subsequent plies are stacked on top of the first ply in the positive z direction.

Figure 1.5-3: MMLT ply ordering convention

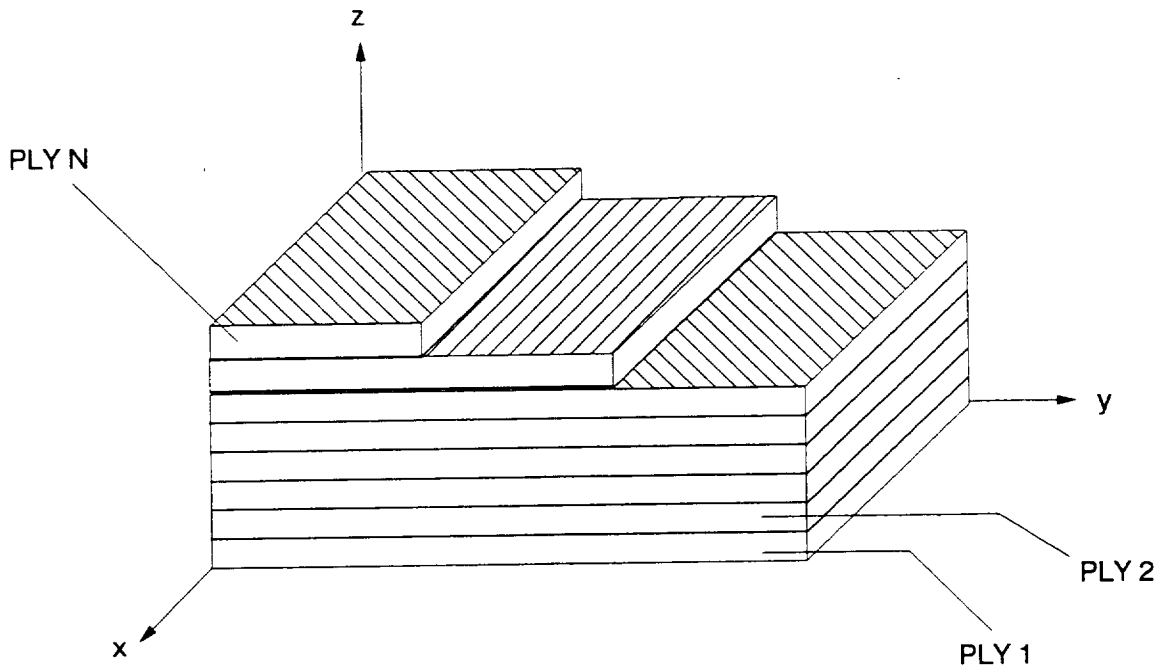

1.5.4 Ply Angle Orientation

The angle θ of a ply is the angle between the local and global coordinate systems. θ is taken positive when the angle of the 1-2 axes measured from the x-y axes is in the counterclockwise direction as shown in Figure 1.5-4.

Figure 1.5-4: MMLT ply orientation angle convention

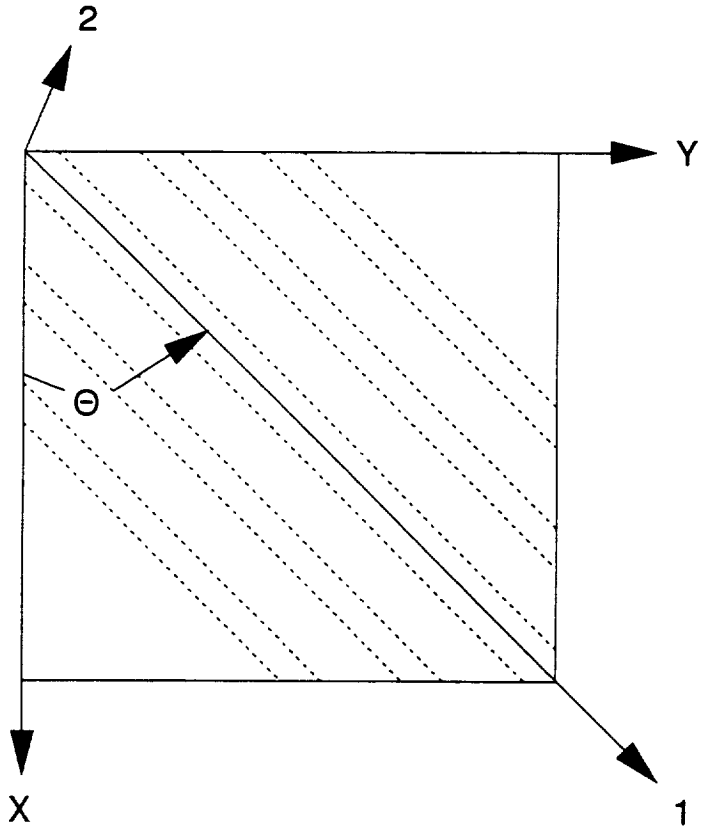

X, Y: global coordinate axes

1, 2: local coordinate axes

Θ: angle between global and local axes

1.5.5 Loading Conventions

The various mechanical loadings (pressure P, resultant force N, and resultant moment M) and their positive sense are presented in Figure 1.5-5. Units for the pressure on the upper and lower surface are force per area, where N_x, N_y, and N_{xy} have the units of force per unit depth, and M_x, M_y, and M_{xy} the units of moment per unit depth. All loading is applied at the global level.

Figure 1.5-5: MMLT positive sense of pressure, resultant forces, and resultant moments

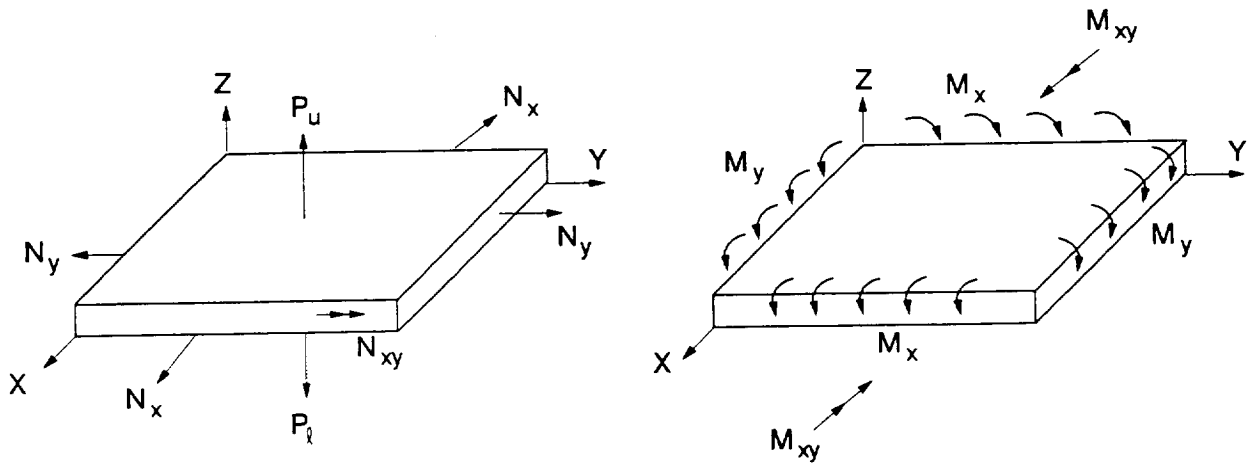

1.6 MMLT Input/Output File Structure

The file structure of the input/output for MMLT is shown in Figure 1.6-1. Two input files are needed to execute the MMLT code, a primary input file and a constituent databank file. MMLT produces four output files: (1) a standard METCAN output file; (2) an input file to METCAN; (3) ten postprocessing files; and (4) a history of optimization. If further details are required on the constituent databank file or any METCAN output file, refer to Reference 3.

The primary input file contains all the fabrication processing history, thermal-mechanical loading, and identifies the constituent materials and the optimizer data. Data needed by the optimizer includes design variables, constraints, optimization strategy, and objective function. The second file is a databank of constituent material properties needed to begin the analysis. By specifying the constituents in the primary input file, their associated reference properties are found in the databank. A description of the constituent databank is located in Appendix B.

Output files include a standard METCAN output file, a METCAN input file, and ten METCAN postprocessing files related to optimum designs. The output files generated by the METCAN module describe the simulation of the tailored MMC and comprises information at three levels, the laminate, ply, and constituent levels. Figure 1.6-2 shows the three levels of analysis and the various information associated with each level. A METCAN input file is provided to the user if future analysis is needed on the tailored MMC. Figure 1.6-3 provides an outline of the METCAN primary input file and a listing of information contained in the file and additional information that can be added. If MMLT was executed for one step, the MMLT input deck would be equivalent to the METCAN input file.

The ten postprocessing output files are automatically generated by MMLT. These ten files essentially contain the same information generated in the primary METCAN output file, but in a more structured format for the user's convenience. The structured format of the files can be very easily manipulated for postprocessing the results, e.g., generating a stress/strain curve for the tailored MMC. Figure 1.6-4 describes the ten postprocessing output files and their contents.

A history of the tailoring steps and a detailed description of the optimization search is located in an output file containing all the steps taken by the optimizer. For example, all design variables are displayed at each step, the active and violated constraints, loading history, a select number of constituent microstresses at the end of fabrication and TM loading, and material properties. The output file from the optimizer is a summary of important information needed by the user to evaluate the results. A summary of the results produced by the optimizer module is shown in Figure 1.6-5.

Figure 1.6-1: MMLT Input/Output File Structure

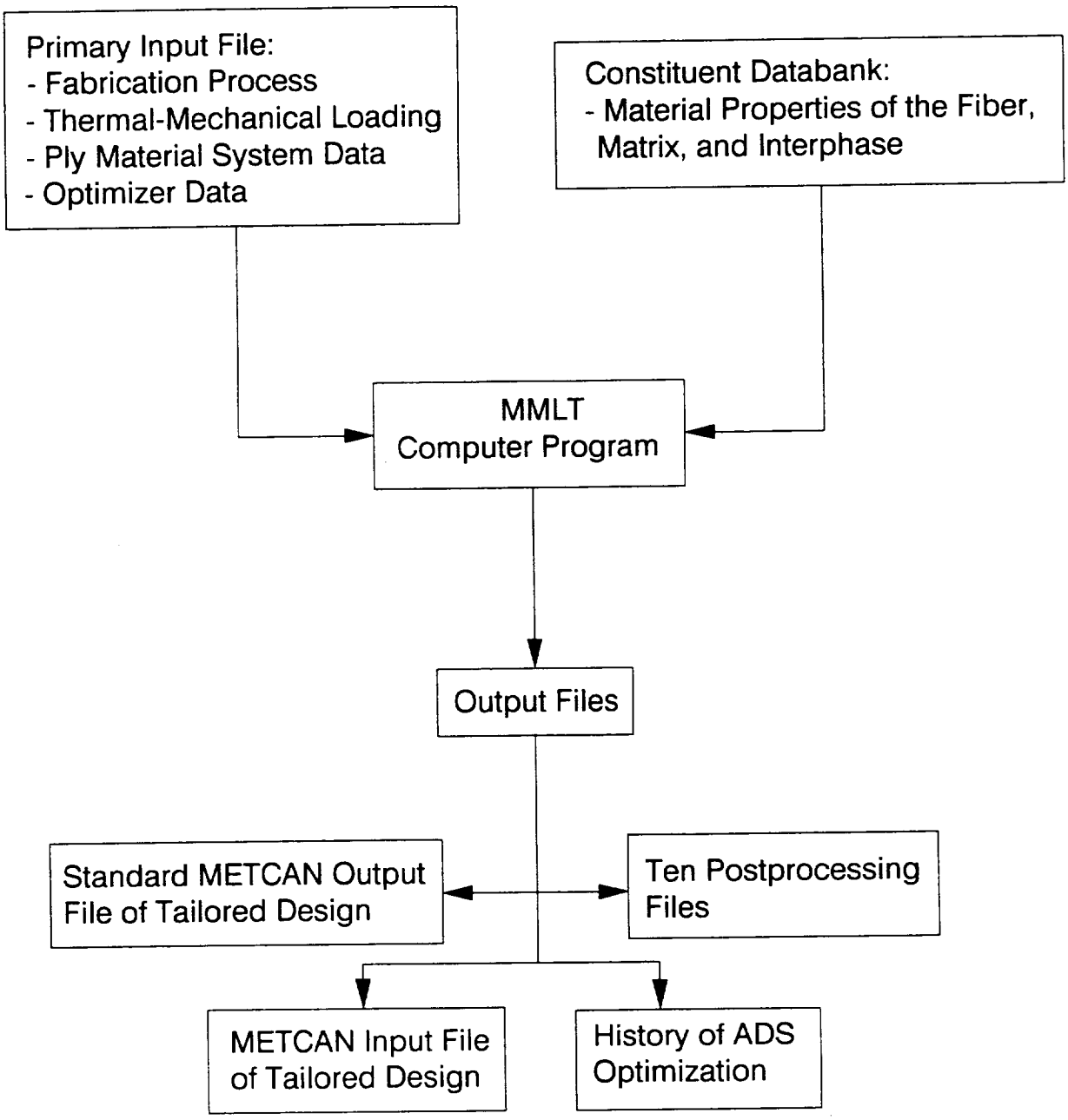

Figure 1.6-2: Levels of Analysis Information Available in the Primary Output File.

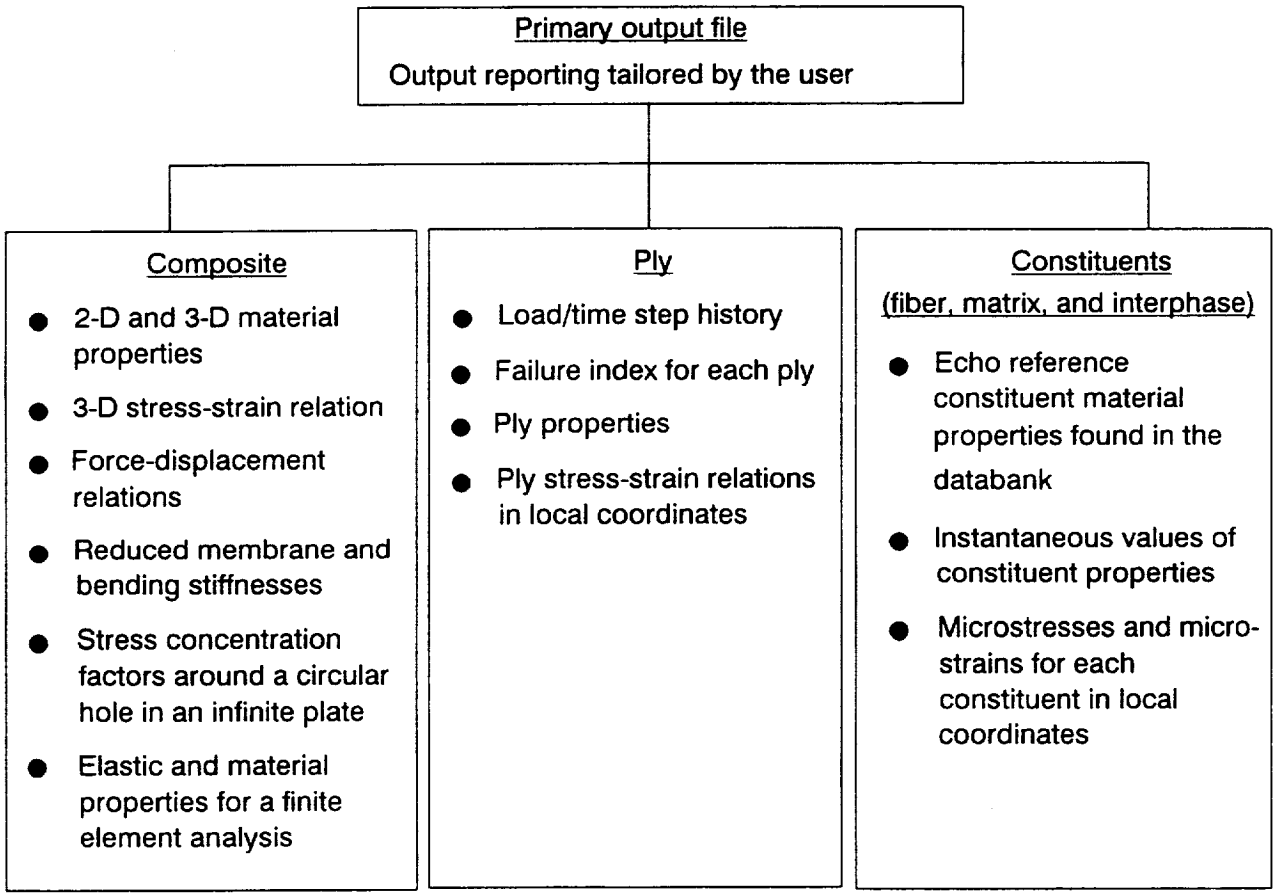

Figure 1.6-3: Functions of the primary input file

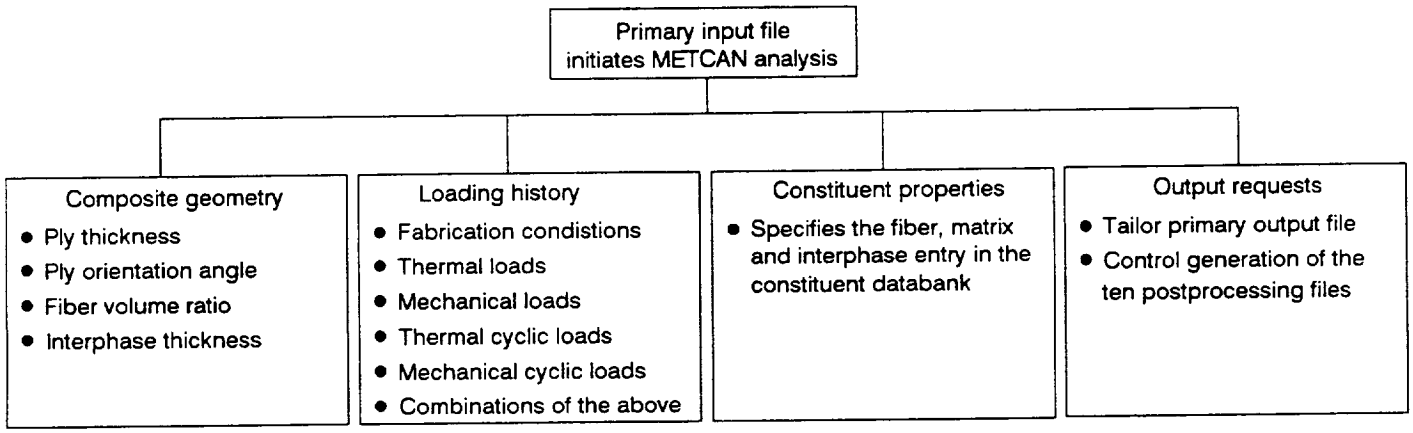

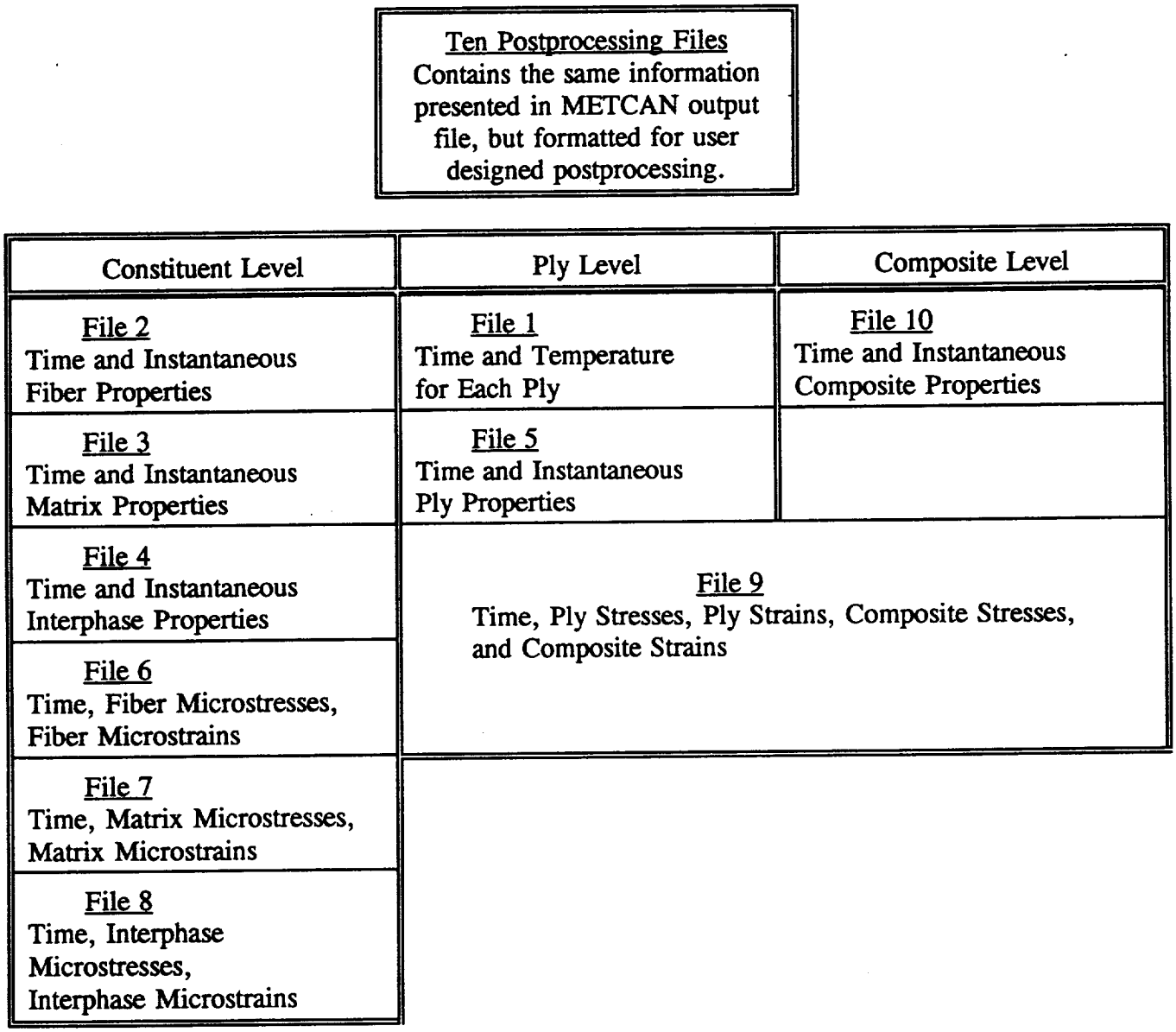

Figure 1.6-4: Contents of the Ten Postprocessing Files.

Figure 1.6-5: List of information available in the history of tailoring output files

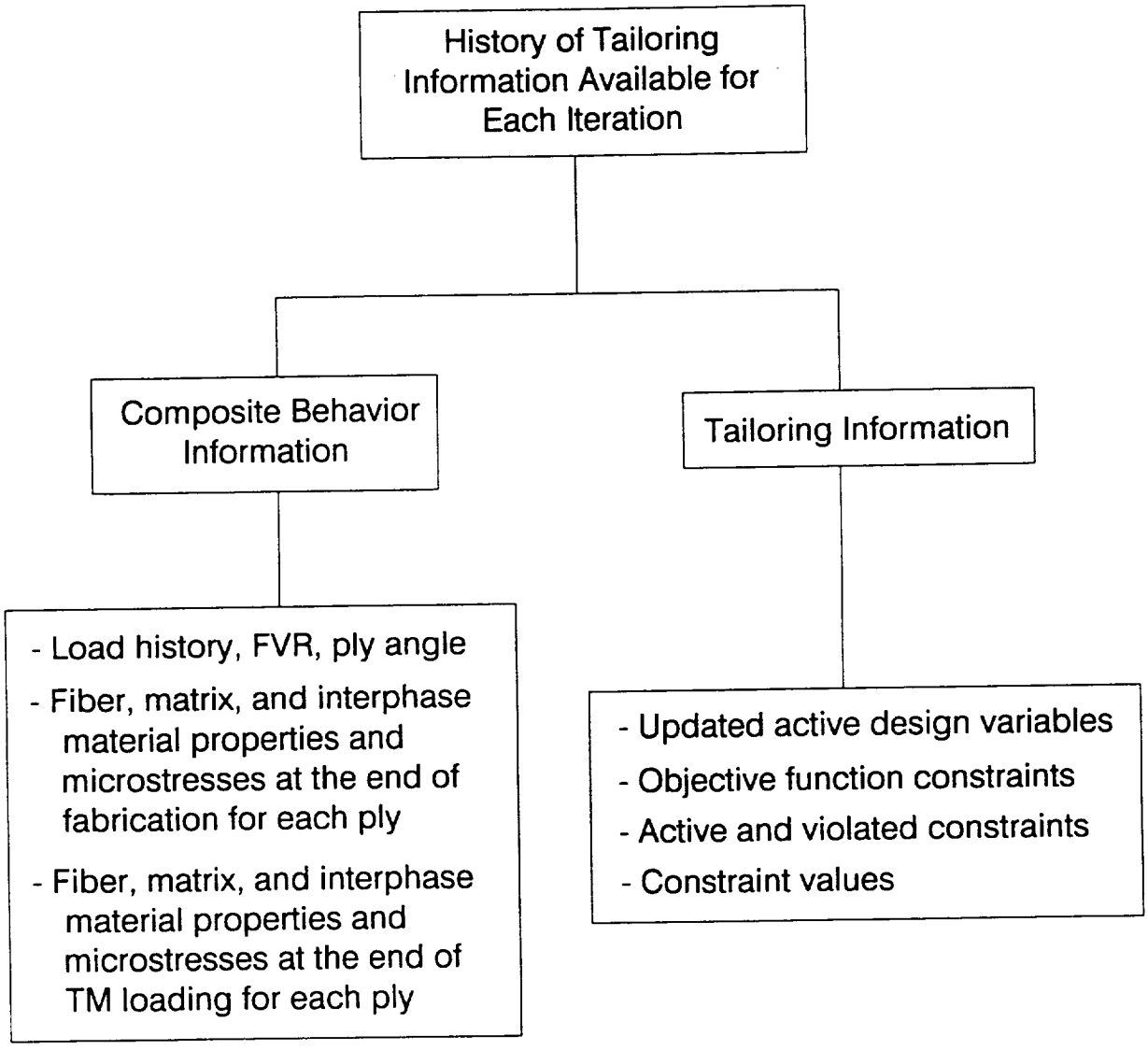

MMLT INPUT PREPARATION

2.1 General Description

Input to the MMLT program is provided in a straightforward user interface. The ASCII input file is created by using "record groups" identified by individual character mnenomics followed by the pertinent information. Character mnemonics are organized in a specific order. Therefore, each record in the input file should be defined in the order they are found in the following sections. The data deck is divided into four different sections. The organization of input mnemonics for MMLT is shown in Figure 2.1-1.

The commands for MMLT are divided into four sections of input. Section 2.2.1 contains the information needed to simulate the fabrication process of the metal matrix composite and thermal-mechanical loading, i.e., the time, temperature, pressure, and mechanical loading at each load step. In the next section (2.2.2), the composite material identification and laminate parameters are defined. Section 2.2.3 assigns the design variables and constraints needed for the optimizer module. The subsequent section (2.2.4) defines the optimization parameters and the objective function. Typical examples of MMLT data files are located in Section 2.3.

Figure 2.1-1: Organization of Input File for MMLT

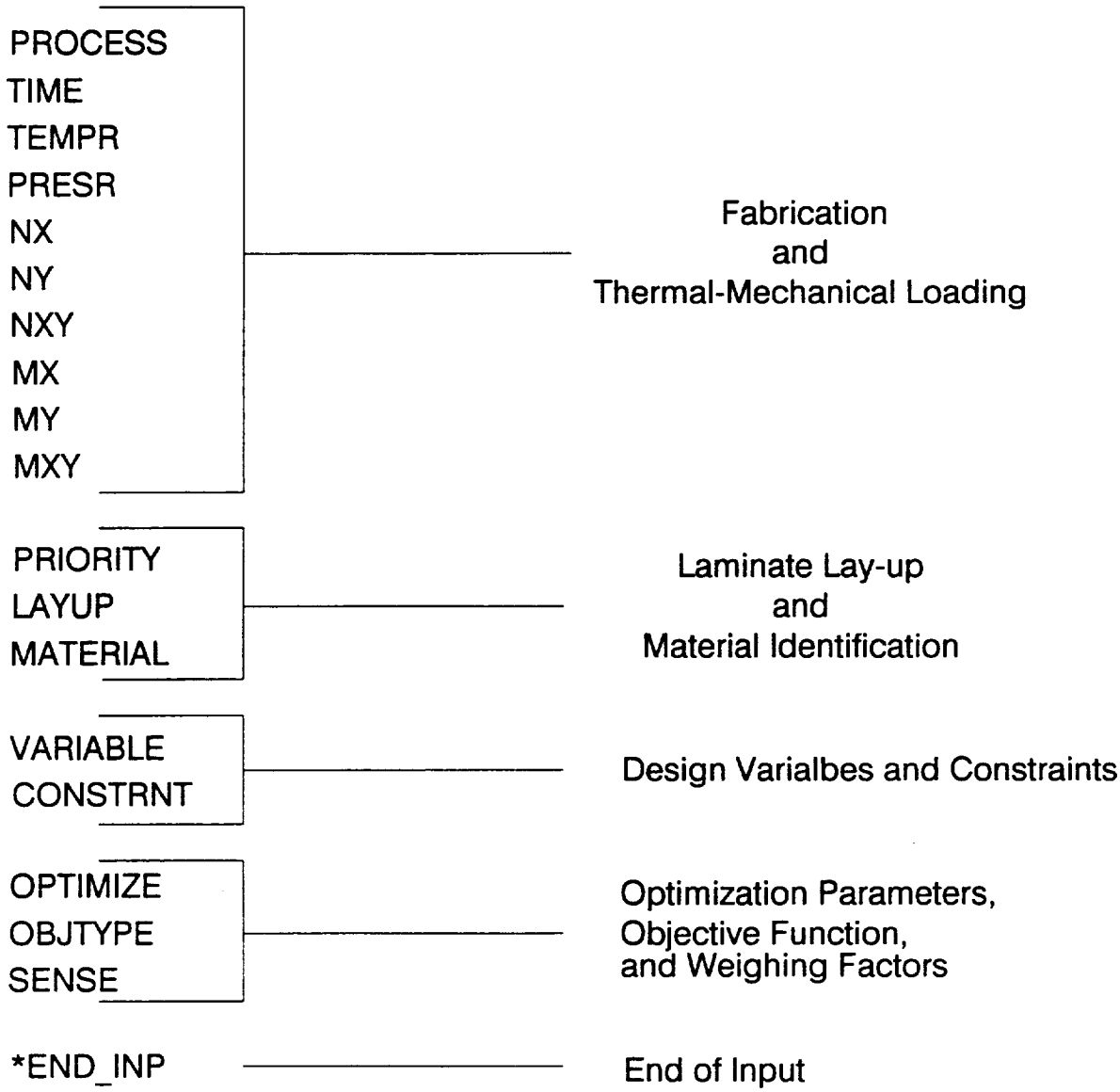

2.2 MMLT Data Deck

This section describes the identification mnemonics needed to create the data deck for MMLT. The command name is at the top of the page followed by a description. The proper format and an example is also included. All fields (ten per line) are eight spaces in length with the first field being a character field (A8). Ensuing fields can be character (A8), real (F8 or E8) or integer (I8) and are specified in the data deck sections. Alphanumeric and integer data can be left or right justified, while real data can be entered anywhere in the appropriate field. Two general commands are given which can be used anywhere within the data deck, i.e., the comment and continuation records.

$

Description:

The $ symbol is used to make comments within the data deck. Also, the $ can be used to inactivate the current line.

Format and Example:

```
$ COMMENT
-------1-------2-------3-------4-------5-------6-------7-------8-------9
$ Comments up to 79 characters long can be used.
```

Field	Format	Name	Columns	Definition
1	A1	$	1	Mnemonic name.
2	A79	COMMENT	2-80	Comment.

Notes:

1. Comments can be inserted anywhere in the input data file, except in between a line and its continuation line. For example, if a line has a + (continuation record indicator) in field 10, then the proceeding line cannot be commented out.

+

Description:

The + symbol indicates a continuation of the current record onto the next line. This symbol is placed at the end of the current line (placed in Field 10 or in column 73-80) and at the beginning of the subsequent line (placed in Field 1 or in column 1-8) to activate the continuation of the current line.

Format and Example:

```
                                                                      +
-------1-------2-------3-------4-------5-------6-------7-------8-------9
+
-------1-------2-------3-------4-------5-------6-------7-------8-------9
TIME                            1     0.0    10.0    20.0    30.0    40.0+
-------1-------2-------3-------4-------5-------6-------7-------8-------9
+           50.0    60.0
```

Current Line:

Field	Format	Name	Columns	Definition
10	A1	+	73	Mnemonic name.

Subsequent Line:

Field	Format	Name	Columns	Definition
1	A1	+	1	Mnemonic name.

Notes:

1. A blank in field ten will indicate that no continuation record is to follow.

2.2.1. Fabrication Process and Thermal-Mechanical Loading Data

The following data records describe the input needed to simulate the fabrication process and subsequent thermal-mechanical loading of the laminate composite. The simulation of the load history to determine the thermal-mechanical response is represented by linear segments of varying temperature and mechanical loadings. The PROCESS, TIME, and TEMPR are needed in the input deck, the remaining mechanical loading records are optional. A list of commands in this section are as follows:

Record Title	Description	Page
Mandatory:		
PROCESS	Defines analysis load history with linear segments.	2.2-5
TIME	Specifies the time during the analysis for each linear segment.	2.2-6
TEMPR	Describes the temperature history of an individual ply.	2.2-7
Optional:		
PRESR	Global lower and upper surface pressure history.	2.2-8
NX	Global in-plane force applied in the x-direction.	2.2-9
NY	Global in-plane force applied in the y-direction.	2.2-10
NXY	Global in-plane shear force.	2.2-11
MX	Global moment resultant applied in the x-direction.	2.2-12
MY	Global moment resultant applied in the y-direction.	2.2-13
MXY	Global twisting moment resultant.	2.2-14

PROCESS

Description:

The PROCESS record defines the total number of discrete load (control) points for the fabrication process and thermal-mechanical (TM) loads. The control points define NPNT-1 load segments. Subincrements are also included to specify the number of steps between control points needed for the nonlinear analysis of the composite.

Format and Example:

PROCESS	NPNT	I_1	I_2 . . .			I_i . .		I_{NPNT-1}
-------1	-------2	-------3	-------4	-------5	-------6	-------7	-------8	-------9
PROCESS	8	5	5	15	20	8	10	5

Field	Format	Name	Columns	Definition
1	A8	PROCESS	1-8	Mnemonic name.
2	I8	NPNT	9-16	Number of load history points needed to define the fabrication process and subsequent TM load.
3	I8	I	17-72	Quantity of subincrements into which a segment is divided for the analysis.

Notes:

1. A maximum of 10 load points (NPNT<10) can be defined.
2. A continuation record must be used when NPNT>7.
3. The maximum number of subincrements is 9 or NPNT-1.
4. The subincrement I is sequentially ordered in the PROCESS record so that I_i corresponds to times t_i to t_{i+1}, in the TIME record.
5. In the above example NPNT=8, therefore, a total of 7 subincrements are needed, I_1 to I_7 should contain quantities. In the second segment for I_2, corresponding to times t_2 to t_3, 5 steps are assigned to perform the linear step analysis.
6. The values of I_1 to I_{NPNT-1} can be any integer value, but as a general rule in choosing the number of subincrements (I_i), select I_i such that each subincrement represents a change in temperature of about 35°F. For example (refer to the TEMPR record), T_{i+1} = 350.0°F and T_i = 70°F then I_i = (350-70)/35≈8 subincrements.

TIME

Description:

The TIME record describes time increments at each point in time for all load segments during the fabrication process and/or thermal-mechanical loading history.

Format and Example:

```
TIME                                J       t1      t2 . . .                  ti+
-------1-------2-------3-------4-------5-------6-------7-------8-------9
+          . . .                 tNPNT
-------1-------2-------3-------4-------5-------6-------7-------8-------9
TIME                                1     0.0  1800.0  3600.0  5400.0  5700.1+
-------1-------2-------3-------4-------5-------6-------7-------8-------9
+         6200.0  6700.0  7200.0
```

1st Record:

Field	Format	Name	Columns	Definition
1	A8	TIME	1-8	Mnemonic name.
2-3			9-24	Intentionally left blank.
4	I8	J	25-32	Numerical label.
5-9	F8	t	33-72	Time increments.
10	A8	+	73-80	Continuation designation.

2nd Record:

Field	Format	Name	Columns	Definition
1	A8	+	1-8	Continuation designation.
2-6	F8	t	9-48	Time increments.

Notes:

1. The number of time steps are equivalent to NPNT specified by the PROCESS record.
2. t_1 to t_2 are the start and end times for the first subincrement located in the PROCESS record at I_1.
3. The continuation record is needed when NPNT>5. This is shown in the above Format and Example section. A + is placed in the first field of the second line and, beginning with the second field, the remaining time steps are recorded using F8 format.
4. Time units are entered as seconds.

TEMPR

Description:

The TEMPR record defines the temperature history of the individual ply corresponding to the number of load segments defined by the PROCESS record.

Format and Example:

```
TEMPR                          J       T1      T2 . . .                 Ti+
-------1-------2-------3-------4-------5-------6-------7-------8-------9
+          . . .               TNPNT
-------1-------2-------3-------4-------5-------6-------7-------8-------9
TEMPR                          2  1500.0  1200.0  1075.0   650.0    70.0+
-------1-------2-------3-------4-------5-------6-------7-------8-------9
+          350.0   700.0   700.0
```

1st Record:

Field	Format	Name	Columns	Definition
1	A8	TEMPR	1-8	Mnemonic name.
2-3			9-24	Intentionally left blank.
4	I8	J	25-32	Numerical label.
5-9	F8	T	33-72	Temperature history.
10	A8	+	73-80	Continuation designation.

2nd Record:

Field	Format	Name	Columns	Definition
1	A8	+	1-8	Continuation designation.
2-6	F8	T	9-48	Temperature history.

Notes:

1. A temperature history must be provided for each ply in the laminate, therefore, a TEMPR record exists for each ply.
2. The number of temperature loads are equivalent to NPNT specified by the PROCESS record.
3. The continuation record is needed when NPNT>5. This is shown in the above Format and Example section. A + is recorded in field 1 of the second line and beginning with field 2 the remaining temperature loads are recorded.
4. Units for temperature are degrees Fahrenheit.
5. Temperature T_i to T_{i+1} is the beginning and ending temperature corresponding to subincrement I_i.

PRESR

Description:

The PRESR command defines the pressure load history for the fabrication process of the metal matrix composite. Pressure is applied in the global z direction on the upper and lower surfaces.

Format and Example:

```
PRESR                                J       P1      P2 . . .                  Pi+
-------1-------2-------3-------4-------5-------6-------7-------8-------9
+           . . .                  PNPNT
-------1-------2-------3-------4-------5-------6-------7-------8-------9
PRESR                                3     0.0 -1000.0 -1000.0 -1000.0     0.0+
-------1-------2-------3-------4-------5-------6-------7-------8-------9
+             0.0     0.0     0.0
```

1st Record:

Field	Format	Name	Columns	Definition
1	A8	PRESR	1-8	Mnemonic name.
2-3			9-24	Intentionally left blank.
4	I8	J	25-32	Numerical label.
5-9	F8	P	33-72	Pressure history.
10	A8	+	73-80	Continuation designation.

2nd Record:

Field	Format	Name	Columns	Definition
1	A8	+	1-8	Continuation designation.
2-6	F8	P	9-48	Pressure history.

Notes:

1. The number of pressure loads are equivalent to NPNT specified by the PROCESS record.
2. The continuation record is needed when NPNT>5. This is shown in the above Format and Example section. A + is placed in the first field of the second line and beginning with the second field the remaining pressure loads are recorded.
3. Units for pressure are pounds per square inch (psi).
4. Pressure P_i to P_{i+1} is the beginning and ending pressure corresponding to subincrement I_i.
5. This command is optional in the input deck.

NX

Description:

A force applied to the laminate composite in the global x direction. Forces are applied at each load point with the default equaling zero.

Format and Example:

```
NX                                J      Nx1       Nx2 . . .                Nxi+
-------1-------2-------3-------4-------5-------6-------7-------8-------9
+          . . .                 NxNPNT
-------1-------2-------3-------4-------5-------6-------7-------8-------9
NX                                4     0.0     0.0     0.0     0.0     0.0+
-------1-------2-------3-------4-------5-------6-------7-------8-------9
+            0.0     0.0   500.0
```

1st Record:

Field	Format	Name	Columns	Definition
1	A8	NX	1-8	Mnemonic name.
2-3			9-24	Intentionally left blank.
4	I8	J	25-32	Numerical label.
5-9	F8	N_x	33-72	Applied resultant forces.

2nd Record:

Field	Format	Name	Columns	Definition
1	A8	+	1-8	Continuation designation.
2-6	F8	N_x	9-48	Applied resultant forces.

Notes:

1. The number of force loads are equivalent to NPNT specified by the PROCESS record.
2. The continuation record is needed when NPNT>5. This is shown in the above Format and Example section. Refer to the continuation record (+) for further details.
3. Forces N_{xi} to N_{xi+1} are the beginning and ending force corresponding to subincrement I_i and vary linearly from t_i to t_{i+1}.
4. The force has units of force per unit depth.
5. A blank field constitutes a zero entry.
6. This command is optional in the input deck.

NY

Description:

A force applied to the laminate composite in the global y direction. Forces are applied at each load point with the default equaling zero.

Format and Example:

```
NY                                  J      Ny1       Ny2 . . .                 Nyi+
-------1-------2-------3-------4-------5-------6-------7-------8-------9
+           . . .                 NyNPNT
-------1-------2-------3-------4-------5-------6-------7-------8-------9
NY                                  5     0.0     0.0     0.0     0.0     0.0+
-------1-------2-------3-------4-------5-------6-------7-------8-------9
+            0.0     0.0   500.0
```

1st Record:

Field	Format	Name	Columns	Definition
1	A8	NY	1-8	Mnemonic name.
2-3			9-24	Intentionally left blank.
4	I8	J	25-32	Numerical label.
5-9	F8	N_y	33-72	Applied resultant forces.

2nd Record:

Field	Format	Name	Columns	Definition
1	A8	+	1-8	Continuation designation.
2-6	F8	N_y	9-48	Applied resultant forces.

Notes:

1. The number of force loads are equivalent to NPNT specified by the PROCESS record.
2. The continuation record is needed when NPNT>5. This is shown in the above Format and Example section. Refer to the continuation record (+) for further details.
3. Forces N_{yi} to N_{yi+1} are the beginning and ending force corresponding to subincrement I_i and vary linearly from t_i to t_{i+1}.
4. The force has units of force per unit depth.
5. A blank field constitutes a zero entry.
6. This command is optional in the input deck.

NXY

Description:

A shear force applied to the laminate composite in the global xy plane. The shear forces are applied at each load point with the default equaling zero.

Format and Example:

```
NXY                                J      Nxy1      Nxy2 . . .                Nxyi+
-------1-------2-------3-------4-------5-------6-------7-------8-------9
+          . . .                NxyNPNT
-------1-------2-------3-------4-------5-------6-------7-------8-------9
NXY                                6     0.0     0.0     0.0     0.0     0.0+
-------1-------2-------3-------4-------5-------6-------7-------8-------9
+            0.0     0.0   500.0
```

1st Record:

Field	Format	Name	Columns	Definition
1	A8	NXY	1-8	Mnemonic name.
2-3			9-24	Intentionally left blank.
4	I8	J	25-32	Numerical label.
5-9	F8	N_{xy}	33-72	Applied shear forces.

2nd Record:

Field	Format	Name	Columns	Definition
1	A8	+	1-8	Continuation designation.
2-6	F8	N_{xy}	9-48	Applied shear forces.

Notes:

1. The number of shear forces are equivalent to NPNT specified by the PROCESS record.
2. The continuation record is needed when NPNT>5. This is shown in the above Format and Example section. Refer to the continuation record (+) for further details.
3. Forces N_{xyi} to N_{xyi+1} are the beginning and ending force corresponding to subincrement I_i and vary linearly from t_i to t_{i+1}.
4. The force has units of force per unit depth.
5. A blank field constitutes a zero entry.
6. This command is optional in the input deck.

MX

Description:

A moment applied to the laminate composite in the global x direction. Moments are applied at each load point with the default equaling zero.

Format and Example:

```
NX                                  J      Mx1       Mx2 . . .                 Mxi+
-------1-------2-------3-------4-------5-------6-------7-------8-------9
+           . . .                 MxNPNT
-------1-------2-------3-------4-------5-------6-------7-------8-------9
NX                                  7     0.0     0.0     0.0     0.0     0.0+
-------1-------2-------3-------4-------5-------6-------7-------8-------9
+             0.0     0.0    10.0
```

1st Record:

Field	Format	Name	Columns	Definition
1	A8	MX	1-8	Mnemonic name.
2-3			9-24	Intentionally left blank.
4	I8	J	25-32	Numerical label.
5	F8	M_x	33-72	Applied resultant moment.

2nd Record:

Field	Format	Name	Columns	Definition
1	A8	+	1-8	Continuation designation.
2-6	F8	M_x	9-48	Applied resultant moment.

Notes:

1. The number of moment loads are equivalent to NPNT specified by the PROCESS record.
2. The continuation record is needed when NPNT>5. This is shown in the above Format and Example section. Refer to the continuation record (+) for further details.
3. Moments M_{xi} to M_{xi+1} are the beginning and ending moment corresponding to subincrement I_i.
4. The moment has units of lbs-in/in.
5. A blank entry constitutes as a zero entry.
6. This command is optional in the input deck.

MY

Description:

A moment applied to the laminate composite in the global y direction. Moments are applied at each load point with the default equaling zero.

Format and Example:

```
NY                                J       My1        My2 . . .                 Myi+
-------1-------2-------3-------4-------5-------6-------7-------8-------9
+           . . .                 MyNPNT
-------1-------2-------3-------4-------5-------6-------7-------8-------9
NY                                8     0.0     0.0     0.0     0.0     0.0+
-------1-------2-------3-------4-------5-------6-------7-------8-------9
+             0.0     0.0     5.0
```

1st Record:

Field	Format	Name	Columns	Definition
1	A8	MY	1-8	Mnemonic name.
2-3			9-24	Intentionally left blank.
4	I8	J	25-32	Numerical label.
5-9	F8	M_y	33-72	Applied resultant moments.

2nd Record:

Field	Format	Name	Columns	Definition
1	A8	+	1-8	Continuation designation.
2-6	F8	M_y	9-48	Applied resultant moment.

Notes:

1. The number of moment loads are equivalent to NPNT specified by the PROCESS record.
2. The continuation record is needed when NPNT>5. This is shown in the above Format and Example section. Refer to the continuation record (+) for further details.
3. Moments M_{yi} to M_{yi+1} are the beginning and ending moment corresponding to subincrement I_i and vary linearly from t_i to t_{i+1}.
4. The moment has units of lbs-in/in.
5. A blank entry constitutes as a zero entry.
6. This command is optional in the input deck.

MXY

Description:

A moment applied to the laminate composite in the global xy plane. The moment are applied at each load point with the default equaling zero.

Format and Example:

```
NXY                                J       Mxy1       Mxy2 . . .                 Mxyi+
-------1-------2-------3-------4-------5-------6-------7-------8-------9
+           . . .                 MxyNPNT
-------1-------2-------3-------4-------5-------6-------7-------8-------9
NXY                                9     0.0     0.0     0.0     0.0     0.0+
-------1-------2-------3-------4-------5-------6-------7-------8-------9
+             0.0     0.0     3.0
```

1st Record:

Field	Format	Name	Columns	Definition
1	A8	MXY	1-8	Mnemonic name.
2-3			9-24	Intentionally left blank.
4	I8	J	25-32	Numerical label.
5-9	F8	M_{xy}	33-72	Applied resultant moment.

2nd Record:

Field	Format	Name	Columns	Definition
1	A8	+	1-8	Continuation designation.
2-6	F8	M_{xy}	9-48	Applied resultant moment.

Notes:

1. The number of moment loads are equivalent to NPNT specified by the PROCESS record.
2. The continuation record is needed when NPNT>5. This is shown in the above Format and Example section. Refer to the continuation record (+) for further details.
3. Moments M_{xyi} to M_{xyi+1} are the beginning and ending moment corresponding to subincrement I_i and vary linearly from t_i to t_{i+1}.
4. The moment has units of lbs-in/in.
5. A blank entry constitutes as a zero entry.
6. This command is optional in the input deck.

2.2.2 Material and Laminate Identification

In this section the laminate make-up, constituent materials and ply characteristics are identified for the desired laminate composite. The following list identifies the records in this section.

Record Title	Description	Page
Mandatory:		
LAY-UP	Defines the lamina order for a composite material.	2.2-17
MATERIAL	Defines the constituent and ply characteristics.	2.2-18
Optional:		
PRIORITY	Ranks the importance of each ply in the laminate.	2.2-16

PRIORITY

Description:

The PRIORITY record defines the hierarchy used to assign the ply thicknesses for the laminate. If the PRIORITY record is omitted the LAY-UP record input will define the layer hierarchy.

Format and Example:

PRIORITY ply_1 ply_2 . . . ply_i . . . ply_n

```
-------1-------2-------3-------4-------5-------6-------7-------8-------9
PRIORITY    SBL1    SBL2    SBL3
```

Field	Format	Name	Columns	Definition
1	A8	PRIORITY	1-8	Mnemonic name.
2-9	A8	ply	9-72	MATERIAL names listed in descending order of importance.

Notes:

1. A maximum of 10 plies can be used.
2. This card should only be used when the thickness is used as a design variable.
3. In the above example, the ply, named SBL1, would be given highest priority, due to the layer hierarchy, followed by each successive layer in the list. The entire thickness of layer SBL1 would be used and if the total thickness was not filled then the SBL2 layer would be added. This process would continue until the total thickness was filled.
4. The ply values are the same values indicated in the MATERIAL records.
5. This record is optional in the input deck.

LAY-UP

Description:

The LAY-UP record defines the ply lay-up for the specific composite listing of each individual ply starting at the bottom ply and moving upward through the thickness of the laminate.

Format and Example:

```
LAY-UP      ply1    ply2 . . .                                          plyn
-------1-------2-------3-------4-------5-------6-------7-------8-------9
LAY-UP      SBL1    SBL2    SBL3
```

Field	Format	Name	Columns	Definition
1	A8	LAY-UP	1-8	Mnemonic name.
2-9	A8	ply	9-72	MATERIAL names listed from bottom surface to top surface.

Notes:

1. A maximum of 10 plies can be used.
2. All plies should be listed in their proper order, even for the case of a symmetric lay-up.
3. The ply names are used to identify each separate ply and the same names are utilized in the MATERIAL records.
4. In the example, SBL1, SBL2, and SBL3 represent the individual plies 1, 2, and 3, respectively.
5. Refer to Figure 1.5-3 for ply ordering sequence.

MATERIAL

Description:

The MATERIAL record defines the ply properties of the individual plies that make-up the laminate, for example, the fiber volume ratio (FVR), interphase thickness, ply thickness, and the ply orientation.

Format and Example:

```
MATERIAL     ply      CODE      FVR        t_d       t_l    ANGLE
-------1-------2-------3-------4-------5-------6-------7-------8-------9
MATERIAL    SBL1 P100COPR     0.40      0.12      0.01       0.0
```

Field	Format	Name	Columns	Definition
1	A8	MATERIAL	1-8	Mnemonic name.
2	A8	ply	9-16	User supplied name for ply.
3	A8	CODE	17-24	Fiber and matrix code names.
4	F8	FVR	25-32	Fiber volume fraction.
5	F8	t_d	33-40	Interphase thickness.
6	F8	t_l	41-48	Ply thickness.
7	F8	ANGLE	49-56	Angle orientation (degrees) relative to the global axis.

Notes:

1. A separate MATERIAL record must be defined for each ply in the composite.
2. A maximum of 10 different plies can be specified.
3. The ply name (e.g. SBL1) should match a name given in the PRIORITY and LAY-UP records and should be unique to all other plies.
4. The CODE field specifies the four letter code names of the fiber and matrix needed to identify the corresponding entries in the constituent databank [Reference 3]. A description on the setup for the databank is located in Appendix B. The four letter code name for each the fiber and matrix is specified in the databank and matched in the CODE field.
5. In the above example, the CODE field specifies P100COPR for a graphite/copper composite, therefore, in the databank file P100 would specify the constituent properties for the fiber and the COPR specifies the copper matrix properties.
6. The user has the ability to setup their own code names within the databank.

7. The fiber volume fraction is restricted to the range:
   $0.05 < FVR < 0.78$
8. If the interphase thickness is:
   (i) $t_d > 0.0$ An interphase exists within the model and extends into the matrix.
   (ii) $t_d = 0.0$ No interphase exists within the model.
   (iii) $t_d < 0.0$ An interphase exists within the model and grows into the fiber.

   The interphase is entered as a percentage of the fiber diameter. In the above example the interphase has a 0.12 or 12% of the fiber diameter thickness.
9. Perfect bonding between the fiber and matrix is assumed if no interphase is considered (i.e. if t_d=0.0).
10. For the angle orientation, θ, refer to Figure 1.5-4. In the example the composite is an unidirectional ply, as a result, θ is equal to 0.0.

2.2.3 Design Variables and Constraints

The design variables and constraints are described by the following commands.

Record Title	Description	Page
VARIABLE	Defines an individual design variable.	2.2-20
DEPEND	Associates a dependent variable to a design variable.	2.2-22
CONSTRNT	Defines the specific constraints for the optimizer.	2.2-23

VARIABLE

Description:

The VARIABLE record defines the information for an individual design variable (parameter) used for the tailoring procedure.

Format and Example:

```
VARIABLE    name       J    VPOS              Z^L        Z^U        Z_START
-------1-------2-------3-------4-------5-------6-------7-------8-------9
VARIABLE   TEMP1       1      11            70.0  1500.0          1350.0
```

Field	Format	Name	Columns	Definition
1	A8	VARIABLE	1-8	Mnemonic name.
2	A8	name	9-16	User supplied name for variable.
3	I8	J	17-24	Numerical identification label.
4	I8	VPOS	25-32	Position of variable within vector of available variables.
5			33-40	Intentionally left blank.
6	F8	Z^L	41-48	Design variable lower bound.
7	F8	Z^U	49-56	Design variable upper bound.
8-9	F16	Z_START	65-72	Initial value of design variable.

Notes:

1. Available design variables and their locations are identified in Table 2.2-1.
2. Each design variable has an individual VARIABLE record. For example, if there are 5 design variables then there must be 5 VARIABLE cards.
3. Initial values of the design variables will overwrite all similar data given by previous input commands. For example, if the consolidation pressures are given in the PRESR command and are also design variables, the initial design variables will overwrite the corresponding pressures given in the PRESR record.
4. In the example, TEMP1 represents the temperature of ply 1 for the first load step which is defined by the VPOS=11.
5. VPOS points to the location of the design variable in the variable storage vector. Further details are located in Table 2.2-1 on the following page.
6. The numerical label (J) should be unique for each VARIABLE record used within the input deck and defined in a numerical order.

Table 2.2-1: Mapping of Available Design Variables

This table lists the available design variables, their dimensions, and locations within the storage array. The user is referred to the VARIABLE record field 4 (VPOS) and the DEPEND record fields 3 and 4 (VPOS1 and VPOS2), respectively.

Description	Dimension	Position
Time	NPRS	1-10
Temperature	NPRS*NLR	11-110
Pressure	NPRS	111-120
Fiber Orientation	NLR	121-130
Fiber Volume Ratio	NLR	131-140
Interphase Thickness	NLR	141-150
Interphase Modulus	NLR	151-160
Interphase CTE	NLR	161-170
Interphase Strength	NLR	171-180
Zeta	1	181
Force, N_x	NPRS	191-200
Force, N_y	NPRS	201-210
Force, N_{xy}	NPRS	211-220
Moment, M_x	NPRS	221-230
Moment, M_y	NPRS	231-240
Moment, M_{xy}	NPRS	241-250

Notes:

1. NPRS is the maximum number of load history segments. Refer to the PROCESS record:
   (i) NPRS = 10
   (ii) NPNT < NPRS
2. NLR is the maximum number of plies the analysis can model.
   (i) NLR = 10
3. The VARIABLE and DEPEND records define the storage position (VPOS, VPOS1, and VPOS2) of the available design parameters.
4. Zeta is the upper bound for the min/max objective function, see the OBJTYPE record.
5. For example, if the ply orientations (for a laminate with 3 plies) are specified as the design variables, then VPOS for ply 1 (bottom ply) is equal to 121, likewise, for ply 2 VPOS = 122 and ply 3 (top ply) VPOS = 123.

DEPEND

Description:

The DEPEND record links additional design parameters which are dependent upon a specified VARIABLE. The DEPEND record allows the user to alter input values without defining another independent design variable. A multiplier is permitted.

Format and Example:

```
DEPEND      name    VPOS1    VPOS2    RATIO
-------1-------2-------3-------4-------5-------6-------7-------8-------9
DEPEND                21       11      1.0
```

Field	Format	Name	Columns	Definition
1	A8	DEPEND	1-8	Mnemonic name.
2	A8	name	9-16	User supplied name.
3	I8	VPOS1	17-24	Position of variable within storage vector of available variables.
4	I8	VPOS2	25-32	Location (VPOS) of the VARIABLE design value that the additional variable is dependent upon.
5	F8	RATIO	33-40	Value assigned as multiplier.

Notes:

1. Positions (VPOS1 and VPOS2) for variables are located in Table 2.2-1.
2. VPOS2 is equivalent to VPOS in the VARIABLE record that the DEPEND record is linking to.
3. In the above example, refer to Table 2.2-1, the DEPEND records indicates that the temperature for the second ply at the first load point, defined by VPOS1=21, will be changed at a 1:1 ratio (RATIO=1.0) to the design variable that is defined by VPOS2=11. A VARIABLE record must exist defining the temperature at storage location (VPOS) 11 which indicates that the temperature in the first ply at the first load point is a design parameter.

CONSTRNT

Description:

The CONSTRNT record defines the constraints for the optimization program. All information needed to compare the calculated value to the allowable value is given by this record along with the specified equation form (refer to Table 2.2-2). The generated terms are stored in an array and referenced by array location (refer to Table 2.2-3).

Format and Example:

```
CONSTRNT     NAME  FACTOR    IFORM    ITYPE  ITERM1  ITERM2
-------1-------2-------3-------4-------5-------6-------7-------8-------9
&CNST        VAL1     VAL2
-------1-------2-------3-------4-------5-------6-------7-------8-------9
CONSTRNT  STRESS      1.0        1        0     151     158
-------1-------2-------3-------4-------5-------6-------7-------8-------9
&CNST        0.95
```

1st Record:

Field	Format	Name	Columns	Definition
1	A8	CONSTRNT	1-8	Mnemonic name.
2	A8	NAME	9-16	User supplied constraint name.
3	F8	FACTOR	17-24	Multiplication factor applied to TERMS for analysis calibration.
4	I8	IFORM	25-32	Equation form of constraint.
5	I8	ITYPE	33-40	0 = nonlinear inequality constraint 2 = linear inequality constraint -1 = nonlinear equality constraint
6 thru 7	I8	ITERM1 thru ITERM2	41-56	Location of constraint terms in storage array, TERMS.

2nd Record:

Field	Format	Name	Columns	Definition
1	A8	&CNST	1-8	Mnemonic name.
2	2F8	VAL1 thru VAL2	9-24	Value needed to calculate constraint equations listed in Table 2.2-2.

Notes:

1. The CONSTRNT record must have the 2nd record.
2. Refer to Table 2.2-2 to set up the proper constraint equations.
3. Available constraints and their locations are identified in Table 2.2-3 to properly set up constraint equations.
4. TERMS refers to the actual values stored in the constraint arrays and located by the ITERM pointers.
5. ITERM1 and ITERM2 define the initial and final locations in TERMS array. In the above example, eight constraints are defined. In case of single constraint definitions ITERM2 may be omitted.

Table 2.2-2: Constraint Equations

The following table is a list of available constraint equations that can be used for the optimizer in the MMLT program. The ID Number listed before each equation is the input on the CONSTRNT record for field 4, IFORM. Each equation compares one or more of the VAL1 through VAL2 input values to the constraint terms, located by ITERM1 through ITERM2 on the CONSTRNT record (refer to Table 2.2-3). Equations are interpreted as follows:

$G \leq 0$ inactive constraint
$G = 0$ active constraint
$G \geq 0$ violated constraint

ID Number	Form of Equation	Description
1	G = (TERM - VAL1) / VAL1	Upper bound constraint.
2	G = (VAL1 - TERM) / VAL1	Lower bound constraint.
3	G = VAL2 - (TERM - VAL1) / VAL1	Constraint from above with margin.
4	G = (TERM - VAL1) / VAL1 - VAL2	Constraint from below with margin.

Table 2.2-3: Mapping of Constraints

This table defines the storage locations of the specified constraints calculated during the optimization. The positions are given under the appropriate heading and are input on the CONSTRNT record fields 6 and 7, ITERMS.

Description (TERMS)	Dimension	Position (ITERMS)
Time	NPRS	1-10
Zeta, σ_{m11A}	2*NLR	11-30
Zeta, σ_{m22A}	2*NLR	31-50
Stress Constraints (Imposed at each control point and each ply):		
σ_{f22C}	NPRS*NLR	51-150
σ_{m22A}	NPRS*NLR	151-250
σ_{m22B}	NPRS*NLR	251-350
σ_{m22C}	NPRS*NLR	351-450
σ_{m11A}	NPRS*NLR	451-550
σ_{m11B}	NPRS*NLR	551-650
σ_{m11C}	NPRS*NLR	651-750
σ_{f11C}	NPRS*NLR	751-850
σ_{d22B}	NPRS*NLR	851-950
σ_{d22C}	NPRS*NLR	951-1050
σ_{d11B}	NPRS*NLR	1051-1150
σ_{d11C}	NPRS*NLR	1151-1250
σ_{f12C}	NPRS*NLR	1251-1350
σ_{m12A}	NPRS*NLR	1351-1450
σ_{m12B}	NPRS*NLR	1451-1550
σ_{m12C}	NPRS*NLR	1551-1650
σ_{d12B}	NPRS*NLR	1651-1750
σ_{d12C}	NPRS*NLR	1751-1850
Final Composite Laminate Strengths:		
S_{T11}	NLR	1851-1860
S_{C11}	NLR	1861-1870

Description (TERMS)	Dimension	Position (ITERMS)
S_{T22}	NLR	1871-1880
S_{C22}	NLR	1881-1890
S_{12}	NLR	1891-1900
S_{13}	NLR	1901-1910
S_{23}	NLR	1911-1920
Interphase Thickness	NLR	1921-1930
Extensional Stiffness	3	1931-1933
Flexural Stiffness	3	1934-1936
Temperature	NPRS	1937-1946
Pressure	NPRS	1947-1956

Notes:

1. NPRS is the maximum number of load history steps (10) and corresponds to the NPNT of the PROCESS record.
2. NLR is the maximum number of plies (10) in the composite.
3. For example, if NPNT=8 and the composite has 3 plies and the fiber stress constraint, σ_{n1}, is used. A CONSTRNT record is needed for each ply and is represented by the following positions in the storage array TERMS:
   a. ITERM1 = 751 and ITERM2 = 758, for ply 1
   b. ITERM1 = 761 and ITERM2 = 768, for ply 2
   c. ITERM1 = 771 and ITERM2 = 778, for ply 3
4. A constraint should only be used when it makes physical sense, for example, if no interphase is used, then stress failure constraint in the B region of the composite model should not be included in the activated constraints.
5. The stress failure constraints are represented by the following equation:
   $$S^C < \sigma < S^T$$
   which is applied throughout the loading history.

2.2.4 Optimization Parameters and Objective Function

This section describes the input records required to set up the optimization problem and the objective function solution. The following records are explained in this section.

Record Title	Description	Page
OPTIMIZE	Sets up the optimization strategy and procedure.	2.2-28
OBJTYPE	Objective function equation type.	2.2-29
SENSE	Sensitivity values for the objective function.	2.2-30
*END_INP	Signals the end of input deck.	2.2-32

OPTIMIZE

Description:

The OPTIMIZE record defines the optimization solution procedure, the optimization strategy, and the search procedure.

Format and Example:

```
OPTIMIZE  ISTRAT    IOPT  ISERCH    IOUT   ISCAL      IDM  MXITER
-------1-------2-------3-------4-------5-------6-------7-------8-------9
OPTIMIZE        0       5       8    3440       1       40    1000
```

Field	Format	Name	Columns	Definition
1	A8	OPTIMIZE	1-8	Mnemonic name.
2	I8	ISTRAT	9-16	Optimizer strategy.
3	I8	IOPT	17-24	Optimization procedure.
4	I8	ISERCH	25-32	Optimizer search procedure.
5	I8	IOUT	33-40	Optimizer output request.
6	I8	ISCAL	41-48	Optimizer scaling indicator.
7	I8	IDM	49-56	Desired number of completed optimizer design moves.
8	I8	MXITER	57-64	Maximum number of objective function/constraints evaluations.

Notes:

1. The user should use the values given in the example for input. The MMLT code was not hardwired for these values to give the user flexibility if they chose to change any of these values.
2. For further information on the terms in this record, the user is referred to Reference 4.
3. One optimization step requires at least NDV+1 objective function/constraint evaluations, where NDV is the total number of design variables defined by the VARIABLE records.

OBJTYPE

Description:

The OBJTYPE record defines the objective function equation type.

Format and Example:

```
OBJTYPE     ITYPE
--------1-------2-------3-------4-------5-------6-------7-------8-------9
OBJTYPE         1
```

Field	Format	Name	Columns	Definition
1	A8	OBJTYPE	1-8	Mnemonic name.
2	I8	ITYPE	9-16	Numeric, 1 thru 5.

Notes:

1. If ITYPE = 1 or 2 then the user must include constraints defined by Zeta in Table 2.2-1.
2. If ITYPE = 3 or 4, the SENSE record must be used to specify the corresponding matrix microstresses or thermal-mechanical loads that are to be minimized or maximized.
3. The following list of objective functions are available:

ITYPE	Objective Function (OF)	Description
1	OF = S_1*zeta	minimize/maximize design variable zeta.
2	OF = S_1*zeta + S_2*(T_i/T_o)	minimize/maximize design variable zeta with temperature added.
3	OF = $S_1*(\sigma_{m11A})^2 + S_2*(\sigma_{m22A})^2 + S_3*(\sigma_{m33A})^2 + S_4*(\sigma_{m11B})^2 + S_5*(\sigma_{m22B})^2 + S_6*(\sigma_{m33B})^2 + S_7*(\sigma_{m11C})^2 + S_8*(\sigma_{m22C})^2 + S_9*(\sigma_{m33C})^2$	minimize/maximize specific matrix stresses.
4	OF = $(S_1*N_x) + (S_2*N_y) + (S_3*N_{xy}) + (S_4*M_x) + (S_5*M_y) + (S_6*M_{xy}) + (S_7*P) + (S_8*T)$	minimize/maximize specific thermal-mechanical loads.
5	OF = $(S_1*A_{11}) + (S_2*A_{22}) + (S_3*A_{66}) + (S_4*D_{11}) + (S_5*D_{22}) + (S_6*D_{66})$	minimize/maximize the laminate stiffness, extensional or bending.

where S_i is the weighted factor.

SENSE

Description:

The SENSE record defines the sensitivity factors for the objective function shown in the OBJTYPE record. The sensitivity factors are used as weighted coefficients to determine rank of importance.

Format and Example:

```
SENSE          S1      S2      S3      S4      S5      S6      S7      S8
-------1-------2-------3-------4-------5-------6-------7-------8-------9
SENSE        1.0     1.0     0.0     0.0     0.0     0.0     0.0     0.0
```

1st Record:

Field	Format	Name	Columns	Definition
1	A8	SENSE	1-8	Mnemonic name.
2	F8	S_1	9-16	Weighted coefficient.
3	F8	S_2	17-24	Weighted coefficient.
4	F8	S_3	25-32	Weighted coefficient.
5	F8	S_4	33-40	Weighted coefficient.
6	F8	S_5	41-48	Weighted coefficient.
7	F8	S_6	49-56	Weighted coefficient.
8	F8	S_7	57-64	Weighted coefficient.
9	F8	S_8	65-72	Weighted coefficient.

2nd Record:

Field	Format	Name	Columns	Definition
1	A8	+	1	Mnemonic name.
2	F8	S_9	9-16	Weighted coefficient.
3	F8	S_{10}	17-24	Weighted coefficient.

SENSE (cont.)

Notes:

1. If the sensitivity is equal to
   (a) a positive value the respective term will be minimized
   (b) a negative value the respective term will be maximized
   based on a positive design value.
2. The values S_1 thru S_{10} correspond to the objective functions listed under the OBJTYP record and the definition of the ITYP value. In the above example, if ITYP=4, then S_1 and S_2 activate and equally weighted the N_x and N_y terms in the objective function.
3. If the sensitivity factor is activated by a nonzero number and ITYP=4 in the OBJTYP record, a VARIABLE record must exist for the corresponding load, otherwise, an error will occur.
4. The continuation card is optional.
5. Default value is 0.0.

*END_INP

Description:

The *END_INP record signals the end of the input file.

Format and Example:

```
*END_INP
-------1-------2-------3-------4-------5-------6-------7-------8-------9
*END_INP
```

Field	Format	Name	Columns	Definition
1	A8	*END_INP	1-8	Mnemonic name.

2.3 Sample Input Data Files

Two examples of input data files, shown in Tables 2.3-1 and 2.3-2, are presented in this section to aid the user in setting up an input file for the MMLT computer code. In addition, the input files demonstrate the flexibility and capabilities of the methodology presented in this manual. In the first example, a $[0/90]_{2s}$ graphite (P100)/copper (Cu) MMC is concurrently tailored for the fabrication process parameters and interphase characteristics in order to reduce the residual matrix microstresses at the end of fabrication. The first example gives a more detailed description than the second example, with each record in the input file given an explanation. The second example involves a $[\pm 45]_s$ silicon carbide (SiC)/titanium (Ti15-3-3-3) with the fabrication process parameters tailored to maximize the in-service loading. In the following sections a description and input file are provided for these two examples.

2.3.1 Case 1: $[0/90]_{2s}$ P100/Copper

The first example problem considers a $[0/90]_{2s}$ laminate made of ultra high modulus graphite (P100)/copper (Cu). The objective is to tailor the fabrication process parameters and interphase characteristics by reducing the longitudinal and transverse stresses in the matrix. Typical design variables include temperature and pressure histories, the interphase modulus, CTE, strength, and layer thickness.

Only the cool-down phase of the fabrication process is simulated during the tailoring and the thermo-mechanical response of the composite. It can be assumed that residual stresses are negligible in the beginning phases of fabrication. The same fabrication process used for the example in Section 1.2 for unidirectional P100/Cu was used as the current process for this laminate (refer to Figure 1.3-1). The first few lines of the input file in Table 2.3-1 are comment records ($) used to describe the problem. A PROCESS record follows to indicate the load history defined by the control points in Figure 1.3-1. The first integer value represents the total number of control points (NPNT=5) and has NPNT-1 linear segments represented by the subincrements ($I_{1 \rightarrow NPNT-1}$) between control points. The TIME, TEMPR, PRESR, and NY records are assigned next. These records simulate the cool-down phase of the fabrication process.

To identify the composite lay-up and material characteristics, the LAY-UP and MATERIAL records are used. The LAY-UP record indicates the individual plies (e.g., PLY1, PLY2, and PLY3) in their stacking sequence by a user supplied name. A MATERIAL record contains the user supplied name of the ply (e.g. PLY1), composite system (P100COPR), the FVR (0.40), interphase layer thickness (12% of the fiber diameter), ply thickness (e. g. 0.01), and angle of ply (e.g. 00.0). For each ply a name must be given in the LAY-UP and MATERIAL records that is the same in both records.

A VARIABLE record identifies the 11 design variables that are tailored. These are the

temperature history (3 design variables) where the consolidation and room temperatures are not used in the tailoring, the pressure history (4 design variables) where the final pressure is always zero, and the interphase properties (4 variables: modulus, CTE, strength, and layer thickness). The current process parameters are shown in Figure 1.3-1. Initial interphase properties were assumed to be the same as the matrix properties. For example, the VARIABLE record can be defined by a user supplied name (e.g., TEMP11), a numerical label (e.g., 1), the position of the variable in the storage array (12, refer to Table 2.2-1), the lower bound, the upper bound, and the initial or current value.

The DEPEND records are used in this example so that consistency among the three plies and loading is maintained. In effect, no new design variables are introduced in tailoring a laminate due to its extra plies. Only the temperature history for ply 1 is used as design variables but the temperature histories for plies 2 and 3 are scaled to equivalent values as ply 1. For the pressures applied to the upper and lower surfaces at each load point, the resultant force (N_y) applied in the y-direction is scaled to the pressure times laminate thickness. This keeps isostatic pressure in the y and z planes. The interphase characteristics are scaled in the same manner as the temperature history, i.e., the interphase characteristics for ply 1 are set as the design variables, where plies 2 and 3 are scaled to equivalent interphase values that are in ply 1. A DEPEND record needs a user supplied name (e.g. TEMP22), the position in the storage array (e.g. 22, refer to Table 2.2-1), the position of the design variable that it is dependent upon (e.g. 12), and a multiplication factor (e.g. 1.0).

Stress constraints are imposed at the control points and defined in the PROCESS record to insure the integrity of the material at all phases of the tailoring. In this manner, five constraints were introduced for each microstress (12) in each ply (3), therefore, a total of 180 stress constraints exist. The CONSTNT and &CNST records identifies the constraint name (e.g. Sf11C1), multiplication factor (1.0), equation form (1, refer to Table 2.2-2), type of constraint (0 indicating a nonlinear constraint), location of constraint in storage array (refer to Table 2.2-3), and for the second record a value that is used to evaluate the constraint. Finally, three additional constraints on the stiffness of the laminate are included to ensure that the integrity of the tailored composite is within 85% of the current composite. Therefore, no substantial degradation is possible during tailoring.

An OPTIMIZE record is used to activate the tailoring procedure by defining the optimizer strategy (0), optimization procedure (5), search procedure (8), output request (3440), scaling indicator (1), maximum number of design moves, and the maximum number of evaluations (200). For further details consult Reference 4. To identify the objective function, the OBJTYPE record is used. In this case, the maximum matrix microstresses (σ_{m11A} and σ_{m22A}) are reduced at the end of fabrication, therefore, 3 identifies this objective function. The SENSE record is used to indicate the active matrix microstresses in the objective function. Finally, the *END_INP record is used to indicate the end of input.

Table 2.3-1: Input for Case 1 (P100/Copper $[0/90]_S$)

```
$=============================================================================
$                                    CASE 1
$
$                                MMLT Input Data File
$
$              Material:  - [0/90]2S Graphite (P100)/Copper (COPR)
$                Tailor:  - Fabrication Parameters
$                              * Temperature and Pressure History
$                         - Interphase Characteristics
$                              * Modulus, CTE, Strength, Thickness
$             Objective:  - Minimize the Residual Matrix Microstresses at
$                           the End of Fabrication in the longitudinal (11)
$                           and transverse (22) directions
$
$=============================================================================
$                         Fabrication Process
$=============================================================================
$  no. of load history points (NPNT), no. of subincrements (I(NPNT-1))
$
PROCESS        5      10      40     10       5
$
$  admissible parameters: TIME, TEMPR, PRESR, NX, NY, NXY, MX, MY, MXY
$     time (secs)
TIME                            1     0.0  1801.0  3601.0  5401.0  5701.0
$     temperature history (°F) of cool-down phase, a TEMPR record for each ply
TEMPR                           2  1500.0  1500.0  1075.0   650.0    70.0
TEMPR                           3  1500.0  1500.0  1075.0   650.0    70.0
TEMPR                           4  1500.0  1500.0  1075.0   650.0    70.0
$     consolidation pressure history (psi)
PRESR                           5     0.0 -1000.0 -1000.0 -1000.0     0.0
$     resultant force (lb/in), equivalent to Pi * tl
NY                              6     0.0   -40.0   -40.0   -40.0     0.0
$=============================================================================
$                 Material and Composite Identification
$=============================================================================
$     assign ply lay-up
LAY-UP      PLY1    PLY2    PLY3
$
$                fib/mat     FVR      td      tl     ang
MATERIAL   PLY1 P100COPR    0.40    0.12    0.01    00.0
MATERIAL   PLY2 P100COPR    0.40    0.12    0.02    90.0
MATERIAL   PLY3 P100COPR    0.40    0.12    0.01    00.0
$=============================================================================
$                      Define Design Variables
$=============================================================================
$
$     temperature variables
$
VARIABLE  TEMP12       1      12            70.0 1500.0     1500.
VARIABLE  TEMP13       2      13            70.0 1200.0     1075.
VARIABLE  TEMP14       3      14            70.0 1200.0      650.
$    link temperatures in ply 1 to plies 2 and 3
DEPEND    TEMP22      22      12     1.0
DEPEND    TEMP23      23      13     1.0
DEPEND    TEMP24      24      14     1.0
DEPEND    TEMP32      32      12     1.0
DEPEND    TEMP33      33      13     1.0
DEPEND    TEMP34      34      14     1.0
```

```
$
$     ... pressure variables
$
VARIABLE   PRES1       4     111          -25000.     0.0        0.
VARIABLE   PRES2       5     112          -25000.     0.0    -1000.
VARIABLE   PRES3       6     113          -25000.     0.0    -1000.
VARIABLE   PRES4       7     114          -25000.     0.0    -1000.
$   ensure that N_yi = P_i * t_l, throughout tailoring
DEPEND     NY1       201     111    0.04
DEPEND     NY2       202     112    0.04
DEPEND     NY3       203     113    0.04
DEPEND     NY4       204     114    0.04
$
$  interphase properties
$       DEPEND allows all plies to have equivalent interphase characteristics
$
VARIABLE modulus       8     151          0.05E08  3.00E8 0.177E8
DEPEND               152     151     1.0
DEPEND               153     151     1.0
VARIABLE     CTE       9     161          0.05E-5 3.00E-5 1.50E-5
DEPEND               162     161     1.0
DEPEND               163     161     1.0
VARIABLE       S      10     171          0.05E05  5.00E5 1.000E5
DEPEND               172     171     1.0
DEPEND               173     171     1.0
VARIABLE      td      11     141             0.05    0.15    0.12
DEPEND               142     141     1.0
DEPEND               143     141     1.0
$=============================================================================
$                            Constraints
$=============================================================================
$         stress constraints where  0.85*S_C^l < σ^l < 0.85*S_T^l
$
$         fiber
$ longitudinal
CONSTRNT Sf11C1    1.000       1       0     751     755
&CNST      0.850
CONSTRNT Sf11C2    1.000       1       0     761     765
&CNST      0.850
CONSTRNT Sf11C3    1.000       1       0     771     775
&CNST      0.850
$ transverse
CONSTRNT Sf22C1    1.000       1       0      51      55
&CNST      0.850
CONSTRNT Sf22C2    1.000       1       0      61      65
&CNST      0.850
CONSTRNT Sf22C3    1.000       1       0      71      75
&CNST      0.850
$
$         matrix
$ longitudinal
CONSTRNT Sm11A1    1.000       1       0     451     455
&CNST      0.850
CONSTRNT Sm11A2    1.000       1       0     461     465
&CNST      0.850
CONSTRNT Sm11A3    1.000       1       0     471     475
&CNST      0.850
$
CONSTRNT Sm11B1    1.000       1       0     551     555
&CNST      0.850
CONSTRNT Sm11B2    1.000       1       0     561     565
&CNST      0.850
CONSTRNT Sm11B3    1.000       1       0     571     575
&CNST      0.850
```

```
$
CONSTRNT Sm11C1     1.000        1        0      651      655
&CNST       0.850
CONSTRNT Sm11C2     1.000        1        0      661      665
&CNST       0.850
CONSTRNT Sm11C3     1.000        1        0      671      675
&CNST       0.850
$ transverse
CONSTRNT Sm22A1     1.000        1        0      151      155
&CNST       0.850
CONSTRNT Sm22A2     1.000        1        0      161      165
&CNST       0.850
CONSTRNT Sm22A3     1.000        1        0      171      175
&CNST       0.850
$
CONSTRNT Sm22B3     1.000        1        0      251      255
&CNST       0.850
CONSTRNT Sm22B3     1.000        1        0      261      265
&CNST       0.850
CONSTRNT Sm22B3     1.000        1        0      271      275
&CNST       0.850
$
CONSTRNT Sm22C1     1.000        1        0      351      355
&CNST       0.850
CONSTRNT Sm22C2     1.000        1        0      361      365
&CNST       0.850
CONSTRNT Sm22C3     1.000        1        0      371      375
&CNST       0.850
$
$          interphase
$ longitudinal
CONSTRNT Sd11B1     1.000        1        0     1051     1055
&CNST       0.850
CONSTRNT Sd11B2     1.000        1        0     1061     1065
&CNST       0.850
CONSTRNT Sd11B3     1.000        1        0     1071     1075
&CNST       0.850
$
CONSTRNT Sd11C1     1.000        1        0     1151     1155
&CNST       0.850
CONSTRNT Sd11C2     1.000        1        0     1161     1165
&CNST       0.850
CONSTRNT Sd11C3     1.000        1        0     1171     1175
&CNST       0.850
$ transverse
CONSTRNT Sd22B1     1.000        1        0      851      855
&CNST       0.850
CONSTRNT Sd22B2     1.000        1        0      861      865
&CNST       0.850
CONSTRNT Sd22B3     1.000        1        0      871      875
&CNST       0.850
$
CONSTRNT Sd22C1     1.000        1        0      951      955
&CNST       0.850
CONSTRNT Sd22C2     1.000        1        0      961      965
&CNST       0.850
CONSTRNT Sd22C3     1.000        1        0      971      975
&CNST       0.850
$ ------------------------------------------------------------------------
$  lower bounds on extensional stiffness (85% of initial)
$
CONSTRNT      a11   1.000        2        0     1931
&CNST       0.850
CONSTRNT      a22   1.000        2        0     1932
```

```
&CNST       0.850
CONSTRNT      a33    1.000        2        0     1933
&CNST       0.850
$
$=============================================================================
$  Define optimization analysis control parameters...          .
$=============================================================================
OPTIMIZE        0        5        8     3440        1       40      200
$=============================================================================
$ Objective Function Data...
$=============================================================================
OBJTYPE         3
SENSE        1.00     1.00     0.00     0.00     0.00     0.00      0.0      0.0+
+            0.0
*END_INP
```

2.3.2 $[\pm 45]_s$ Silicon Carbide/Titanium

The consolidation temperature and pressure histories are tailored in order to maximize the in-service load applied after fabrication for a SiC/Ti15-3-3-3 composite system. The thermo-mechanical (TM) load consists of a linear temperature increase to 600°F followed by the application of a biaxial in-plane tensile force ($N_x = N_y = 1500.0$lb/in) (refer to Figure 2.3-1). A 40% FVR is maintained in each ply and a 0.01in ply thickness is assigned to all plies. To simulate the fabrication process and subsequent TM loading in the input file (Table 2.3-2), a continuation record (+) must be used for the PROCESS, TIME, TEMPRs, PRESR, NX and NY records.

Eight design variables are needed for the simultaneous tailoring of the fabrication process and in-service loading: three temperature parameters, four pressure parameters, and the resultant force which is maximized. The initial and final temperatures during fabrication are not used along with the temperature history used for the in-service loading. The first four control points for the pressure are the design variables, the final pressure during fabrication and the in-service pressure loading after fabrication are all set to zero. A DEPEND record is used to keep N_y equal to the design variable N_x because only one resultant force is needed as a design variable and the DEPEND record ensures equivalency between the loads throughout tailoring.

Stress constraints are similar to the previous example, except for the elimination of the extra microstresses. This is because no interphase is used and the additional stress constraints are created by the TM loading after fabrication. If the interphase is non-existent, then only 6 microstresses exist within the composite model and perfect bonding between the fiber and matrix is assumed. Additional constraints are on the final stiffness of the fabricated laminate.

A different objective function is used for this example, OBJTYPE record identifies the objective function to be 4 and the corresponding loads are indicated in the SENSE record. Note that in the SENSE record the first two entries correspond to N_x and N_y, though only N_x is a design variable, both N_x and N_y are equalled weighed in the objective function. A -1.0 is assigned in the SENSE record indicating maximization of the tensile in-plane force. In contrast, if a compressive in-plane force was maximized a positive 1.0 would be used.

Figure 2.3-1: Current fabrication process and TM loading

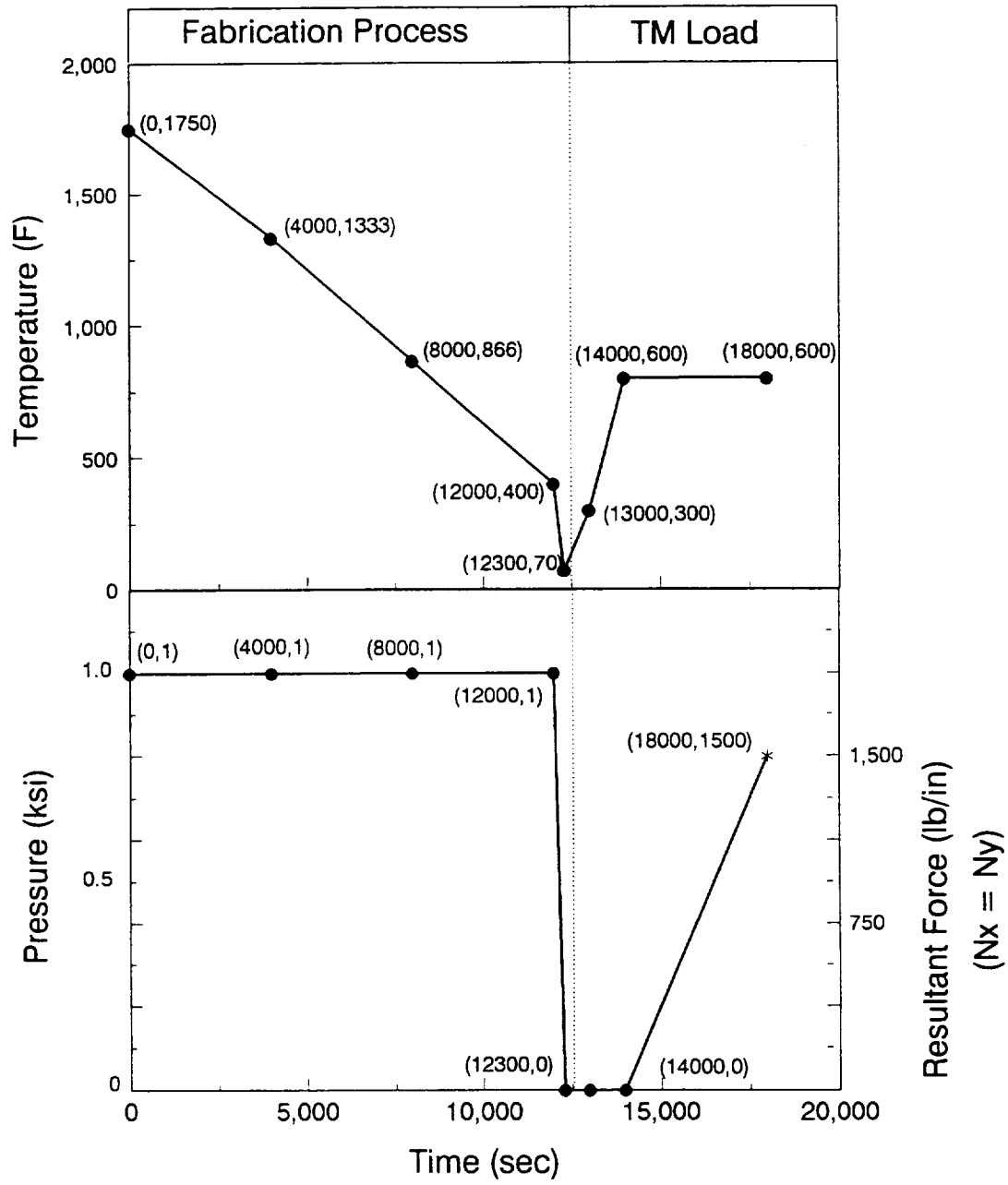

Table 2.3-2: Input for Case 2 ($[\pm 45]_s$ SiC/Ti15)

```
$=============================================================================
$                              CASE 2
$
$                         MMLT Input Data File
$
$             Material:  - [±45]s Silicon Carbide (SICA)/Titanium (TI15)
$               Tailor:  - Fabrication Process
$                           * Temperature and Pressure Histories
$            Objective:  - Maximize the Tensile Load at an Elevated Temperature
$                          and Applied After Fabrication
$
$=============================================================================
$                         Fabrication Process
$=============================================================================
$ no. of load history points (NPNT): no. of subincrements (I(NPNT-1))
$
PROCESS        8      10      20      10       5        5       10       10
$
$ admissible parameters: TIME, TEMPR, PRESR, NX, NY, NXY, MX, MY, MXY
$
$    time (sec), continuation card used
TIME                              1      0.0   4000.0   8000.0 12000.0 12300.0+
+       13000.0 14000.0 18000.0
$    temperature history (°F) of cool-down phase, a TEMPR for each ply
TEMPR                             2   1750.0   1333.0    866.0    400.0     70.0+
+           300.0    800.0    800.0
TEMPR                             3   1750.0   1333.0    866.0    400.0     70.0+
+           300.0    800.0    800.0
TEMPR                             4   1750.0   1333.0    866.0    400.0     70.0+
+           300.0    800.0    800.0
$     consolidation pressure (psi) history
PRESR                             5  -1000.0  -1000.0  -1000.0  -1000.0      0.0+
+             0.0      0.0      0.0
$     tensile resultant force (lb/in), in global x-direction
NX                                6      0.0      0.0      0.0      0.0      0.0+
+             0.0      0.0   1500.0
$     resultant force (lb/in), equivalent Pi * tl
NY                                7    -40.0    -40.0    -40.0    -40.0      0.0+
+             0.0      0.0   1500.0
$=============================================================================
$          Material and Composite Identification
$=============================================================================
$ assign ply lay-up
LAY-UP       PLY1     PLY2     PLY3
$                   fib/mat     fvr       td       tl      ang
MATERIAL     PLY1 SIC2TI53     0.40     0.00     0.01     45.0
MATERIAL     PLY2 SIC2TI53     0.40     0.00     0.02    -45.0
MATERIAL     PLY3 SIC2TI53     0.40     0.00     0.01     45.0
$=============================================================================
$                  Define Design Variables...
$=============================================================================
$
$     temperature variables
$
VARIABLE   TEMP12        1       12              70.0 1700.0      1333.
VARIABLE   TEMP13        2       13              70.0 1700.0       866.
VARIABLE   TEMP14        3       14              70.0 1700.0       400.
DEPEND     TEMP22       22       12      1.0
DEPEND     TEMP23       23       13      1.0
```

```
DEPEND     TEMP24       24       14      1.0
DEPEND     TEMP32       32       12      1.0
DEPEND     TEMP33       33       13      1.0
DEPEND     TEMP34       34       14      1.0
$
$      pressure variables
$
VARIABLE    PRES1        4      111          -50000.     0.0         0.
VARIABLE    PRES2        5      112          -50000.     0.0     -1000.
VARIABLE    PRES3        6      113          -50000.     0.0     -1000.
VARIABLE    PRES4        7      114          -50000.     0.0     -1000.
DEPEND      NY1        201      111     0.04
DEPEND      NY2        202      112     0.04
DEPEND      NY3        203      113     0.04
DEPEND      NY4        204      114     0.04
$
$      Tensile in-plane force applied after fabrication at an elevated temp
$
VARIABLE       NX         8      198             500.0  6500.0  4000.0
DEPEND         NY       199      198      1.0
$=============================================================================
$                             Constraints
$=============================================================================
$          stress constraints where  0.85*S_C^i < σ^i < 0.85*S_T^i
$
$          fiber
$ longitudinal
CONSTRNT Sf11C1     1.000        1        0      751      758
&CNST       0.850
CONSTRNT Sf11C2     1.000        1        0      761      768
&CNST       0.850
CONSTRNT Sf11C3     1.000        1        0      771      778
&CNST       0.850
$ transverse
CONSTRNT Sf22C1     1.000        1        0       51       58
&CNST       0.850
CONSTRNT Sf22C2     1.000        1        0       61       68
&CNST       0.850
CONSTRNT Sf22C3     1.000        1        0       71       78
&CNST       0.850
$
$          matrix
$ longitudinal
CONSTRNT Sm11A1     1.000        1        0      451      458
&CNST       0.850
CONSTRNT Sm11A2     1.000        1        0      461      468
&CNST       0.850
CONSTRNT Sm11A3     1.000        1        0      471      478
&CNST       0.850
$
CONSTRNT Sm11C1     1.000        1        0      651      658
&CNST       0.850
CONSTRNT Sm11C2     1.000        1        0      661      668
&CNST       0.850
CONSTRNT Sm11C3     1.000        1        0      671      678
&CNST       0.850
$ transverse
CONSTRNT Sm22A1     1.000        1        0      151      158
&CNST       0.850
CONSTRNT Sm22A2     1.000        1        0      161      168
&CNST       0.850
CONSTRNT Sm22A3     1.000        1        0      171      178
&CNST       0.850
$
```

```
CONSTRNT Sm22C1     1.000       1       0      351      358
&CNST       0.850
CONSTRNT Sm22C2     1.000       1       0      361      368
&CNST       0.850
CONSTRNT Sm22C3     1.000       1       0      371      378
&CNST       0.850
$ ------------------------------------------------------------------------------
$  lower bounds on extensional stiffness (85% of initial)
$
CONSTRNT      a11   1.000       2       0     1931
&CNST       0.850
CONSTRNT      a22   1.000       2       0     1932
&CNST       0.850
CONSTRNT      a33   1.000       2       0     1933
&CNST       0.850
$   ensures proper temperature gradients after fabrication
CONSTRNT   DTEMP    1.000       1       0     1937     1940
&CNST       2.50
$==============================================================================
$  Define optimization analysis control parameters...
$==============================================================================
OPTIMIZE        0       5       8    3440       1       40      200
$==============================================================================
$ Objective Function Data...
$==============================================================================
OBJTYPE         4
SENSE       -1.00   -1.00    0.00    0.00    0.00    0.00     0.0     0.0
*END_INP
```

PROCEDURE TO RUN MMLT

3.1 Introduction

The MMLT computer code has been run in batch mode on the VAX Cluster, Cray X-MP, and Convex computer facilities at NASA Lewis Research Center. When using the VAX, the VMS operating system is used. In contrast, the Cray X-MP and Convex use UNICOS and UNIX operating systems, respectively. The procedure to compile and execute the program on the VAX, Cray X-MP, or Convex is given in this section. In each example MMLT.FOR is the source code, mmlt.inp is the MMLT input data file, data.dat is the METCAN constituent databank, and mmlt or MMLT.EXE is the executable file depending on the system used. Also, Table 3.1-1 lists the input/output units needed to read and write to the correct files. The compilation and linking of the MMLT code is only required the first time the code is used. Afterwards the mmlt or MMLT.EXE can be used every time an execution is desired.

Table 3.1-1: Read/Write Units for MMLT

Description	Input	Output	File Name
MMLT input	9		mmlt.inp
Constituent database	8		data.dat
METCAN output		16	metcan.out
METCAN input		15	metcan.inp
History of ADS Optimization		7	h_opt.out
Postprocessing files (10)		61-70	post*.out
Scratch files (2)		28-29	scr*.out

The * is used as a wildcard symbol.

3.2 Run MMLT on the VAX

The first step is to compile and link the MMLT program to create an executable file named MMLT.EXE. The following C_MMLT.COM file can be used to compile the source code:

```
! com file to compile and link mmlt.for
for mmlt
link mmlt
exit
```

To execute the command file type "C_MMLT" after the VMS prompt ($) on the VAX machine. After compiling and linking the code, another COM file has to be created which can be called MMLT. COM and is listed below:

```
!                com file for MMLT
!  ------------------------------------------------
! -->  input files
!
! main input file
 assign mmlt.inp           for009
!
! METCAN database
 assign data.dat           for008
!
! -->  output files
 assign metcan.out         for016
 assign metcan.dat         for015
 assign h_opt.out          for007
!
! --> scratch files
 assign scr1.dat           for028
 assign scr2.dat           for029
! --> post processing files from METCAN
 assign post_1.out         for061
 assign post_2.out         for062
 assign post_3.out         for063
 assign post_4.out         for064
 assign post_5.out         for065
 assign post_6.out         for066
 assign post_7.out         for067
 assign post_8.out         for068
 assign post_9.out         for069
 assign post_10.out        for070
!
 run MMLT.EXE
!
 del/noconf          iof1%.dat;*
 del/noconf          scr%.dat;*
 exit
```

The following command is issued to start the execution of the code:

```
$ SUBMIT MMLT.COM
```

where the $ is the VAX prompt. When the execution of the program is completed, the output files, as named in the command file, can be reviewed by the user.

3.3 Run MMLT on the Cray X-MP

The job execution file to compile, link, and execute MMLT on the Cray at NASA LeRC can be submitted from the VAX or VM front-end machines. Slight differences exist between the two files. The procedure used here is very similar to the one used in the previous section (section 3.1). If using the VAX front-end machine, the file type extension *.JOB should be used. The listing of MMLT.JOB submitted from the VAX front-end is given as follows:

```
# USER=myuserid PW=myuserpwd
# QSUB -r MMLT
# QSUB -nr
# QSUB -nc
# QSUB -q batch
# QSUB -lT 60
# QSUB -lM 1.6Mw
# QSUB -eo
set -vxk
cd
mkdir mmlt_o
cd mmlt_o
ja
fetch mmlt.f  -t'mmlt.for'
cft77 -dp -ev mmlt.f
segldr -o mmlt.exe abit.o
fetch fort.09   -t'mmlt.inp'
fetch fort.08   -t'data.dat'
mmlt.exe
dispose fort.16      -t'metcan.out'
dispose fort.15      -t'metcan.inp'
dispose fort.07      -t'h_opt.out'
dispose fort.28      -t'scr1.dat'
dispose fort.29      -t'scr2.dat'
dispose fort.61      -t'post_1.out'
dispose fort.62      -t'post_2.out'
dispose fort.63      -t'post_3.out'
dispose fort.64      -t'post_4.out'
dispose fort.65      -t'post_5.out'
dispose fort.66      -t'post_6.out'
dispose fort.67      -t'post_7.out'
dispose fort.68      -t'post_8.out'
dispose fort.69      -t'post_9.out'
dispose fort.70      -t'post_10.out'
ja -s
exit
```

3.4 Run MMLT on the Convex

The first step is to compile and link MMLT program to create an executable file named mmlt.o. The following mmlt_c file can be used to compile and link the source code:

```
      echo
      echo "compile? (y/n)"
      read p1
      #
      #          compile
      #
      if [ $p1 = "y" ]
      then
        echo "COMPILING..."
      fc -c -72 -nw -db \
       mmlt.f  mmltin.f  metbuf_2.f  objf.f  cons.f  \
       defn.f  aux1.f  rept.f  mmcv3_1.f  u967ads.f
fi
#
#          load
#
echo "LOADING..."
   fc -db -o mmlt \
         mmlt.o mmltin.o metbuf_2.o mmcv3_1.o objf.o cons.o defn.o aux1.o \
         rept.o u967ads.o
#
echo "END"
```

After compiling and linking the code, another executable file should be created which can be called mmlt and is listed below:

```
      #         input - mmlt
      # echo "SETTING I/O UNITS..."
      setenv FOR009    mmlt.inp
      setenv FOR008    data.dat
      #
      #         output file(s)
      #
      setenv FOR016   metcan.out
      setenv FOR015   metcan.inp
      setenv FOR007   h_opt.out
      #
      #      for metcan post processing files
      #
      setenv FOR028   scr1.dat
      setenv FOR029   scr2.dat
      setenv FOR061   post_1.out
      setenv FOR062   post_2.out
      setenv FOR063   post_3.out
      setenv FOR064   post_4.out
      setenv FOR065   post_5.out
      setenv FOR066   post_6.out
      setenv FOR067   post_7.out
      setenv FOR068   post_8.out
      setenv FOR069   post_9.out
      setenv FOR070   post_10.out
      #
```

```
#          run executable
#
echo "RUNNING..."
mmlt
#
#          reset i/o units
#
echo "RESETTING I/O UNITS..."
unsetenv FOR005
unsetenv FOR007
unsetenv FOR008
unsetenv FOR019
unsetenv FOR039
unsetenv FOR040
unsetenv FOR06*
unsetenv FOR070
echo "END"
```

REFERENCES

1. D. A. Saravanos, M. R. Morel, and C. C. Chamis, "Concurrent Tailoring of Fabrication Process and Interphase Layer To Reduce Residual Stresses In Metal Matrix Composites," *SAMPE Quarterly*, Vol. 22, No. 4, July 1991.

2. M. R. Morel, D. A. Saravanos, and C. C. Chamis, "Laminate Tailoring for High-Temperature Performance," *Proceedings of the 37th International SAMPE Symposium and Exhibition*, Anaheim, CA, March 1992.

3. H. -J. Lee, P. K. Gotsis, P. L. N. Murthy, and D. A. Hopkins, "Metal Matrix Composite Analyzer - User's Manual," *NASA TM 105244*, July 1991.

4. G. N. Vanderplaats, "ADS - A Fortran Program for Automated Design Synthesis," *NASA CR 177985*, 1985.

5. G. N. Vanderplaats and H. Sugimoto, "A General-Purpose Optimization Program for Engineering Design," *Computers and Structures*, Vol. 24, No. 1, pp. 13-21, 1986.

APPENDIX A

Nomenclature

Symbols:

E	Modulus (psi).
F(**Z**)	Objective function.
G	Shear modulus (psi).
I	Value of load history subincrement.
i	i-th value of a constant.
M	Moment resultant (lb-in/in).
N	Force resultant (lb/in).
P	Pressure (psi).
Q(**Z**)	Inequality constraint.
S	Strength (psi).
T	Temperature (°F).
T_M	Melting temperature (°F).
T_o	Reference temperature (°F).
t	Time (sec).
t_d	Interphase thickness (%).
t_l	Ply thickness (in).
Z	Design vector.

Greek:

α	Coefficient of thermal expansion (in/in/°F).
ϵ	Strain.
θ	Ply orientation angle (degrees).
ν	Poisson's ratio.
ρ	Density ($lb.in^3$).
σ	Stress (psi).

Coordinate Systems:

x,y,z	Global (laminate) coordinate system.
1,2,3	Local (material) coordinate system.

Subscripts:

A,B,C	Constituent microregion identification.
d	Interphase.
f	Fiber.
l	Laminate.
L	Lower.
m	Matrix
U	Upper.

APPENDIX B

Constituent Databank

MMLT utilizes the same constituent databank used in METCAN. Furthermore, the following description in this appendix contains the same information found in Reference 2 but is included here for the user's convenience. The file contains room temperature constituent (fiber, matrix, and interphase) properties of various materials. The primary purpose of the databank is to relieve the user of the repetitive burden of including this information as part of the primary input file. By assigning a unique code name for each constituent in the databank, the user merely has to specify the code name in the MATERIAL record of the primary input file to acquire the numerous properties for a specific constituent. Also, advantages of using the databank are the flexibility of adding other constituents as they become available and updating current constituent materials due to current research. The databank is organized into three sections; the first for the fiber properties, the second for matrix properties, and the third for the interphase properties. The organization of the databank and the properties contained for each constituent is shown in Figure B-1.

The databank is organized into three sections; each section containing a set of a number of records in a predefined order. The first section contains the fiber properties and contains nine records. The second section arranges the matrix properties into ten records, while the third section contains the interphase properties on nine records. Each record is composed of one or more lines of data whose format varies from record to record. Note that the format for the constituent databank records is different from the fixed format employed in the primary input file. Each line of data begins with a mnemonic. Character, integer, and exponential formats must be right justified, while the floating point format can fall anywhere in the appropriate field. The various constituent properties input into the databank are room temperature values. The units can be given in English or SI but the user must be consistent throughout.

Figure B-1: Organization of the Constituent Databank

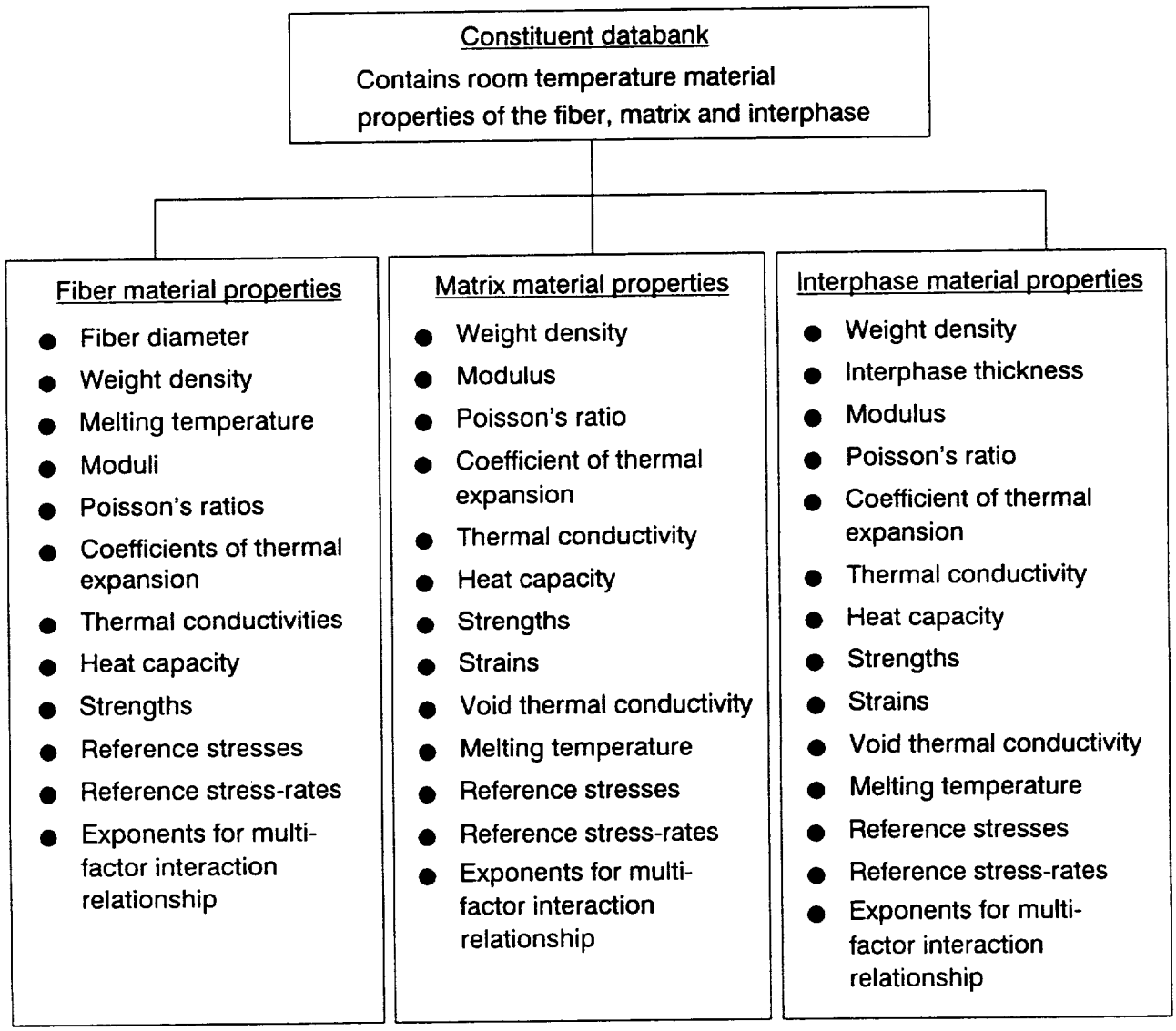

B.1 Fiber Entries

B.1.1 Fiber Data Record: CODE

Description: Defines fiber code name

Format and Example:

```
---+-----------------------------------------------------------+
CODE       COMMENT
---+-----------------------------------------------------------+
SICA       Optional description of fiber
---+-----------------------------------------------------------+
```

Field No.	Field Name	Format	Columns	Description
1	CODE	A4	1-4	Fiber code name
2	COMMENT	A76	5-80	Optional description of fiber

Remarks:

1. The CODE for each fiber in the databank must be unique.

B.1.2 Fiber Data Record: FP

Description: Defines fiber physical properties

Format and Example:

FP	N_f	D_f	ρ_f	T_{Mf}
FP	1	.560E-02	.110E+00	.487E+04

Field No.	Field Name	Format	Columns	Description
1	FP	A2	1-2	Mnemonic name
2	N_f	I5	4-9	Number of fibers per bundle
3	D_f	E10.3	10-19	Fiber diameter
4	ρ_f	E10.3	20-29	Fiber weight density
5	T_{Mf}	E10.3	30-39	Fiber melting temperature

B.1.3 Fiber Data Record: FE

Description: Defines fiber elastic properties

Format and Example:

```
-+---------+--------+--------+--------+--------+--------+--
FE      E         E         n         n         G         G
-+---------+--------+--------+--------+--------+--------+--
FE   .620E+08  .620E+08  .300E+00  .300E+00  .238E+08  .238E+08
-+---------+--------+--------+--------+--------+--------+--
```

Field No.	Field Name	Format	Columns	Description
1	FE	A2	1-2	Mnemonic name
2	E	E10.3	4-13	Fiber longitudinal modulus
3	E	E10.3	14-23	Fiber transverse modulus
4	n	E10.3	24-33	Fiber Poisson's ratio
5	n	E10.3	34-43	Fiber Poisson's ratio
6	G	E10.3	44-53	Fiber in-plane shear modulus
7	G	E10.3	54-63	Fiber out-of-plane shear modulus

B.1.4 Fiber Data Record: FT

Description: Defines fiber thermal properties

Format and Example:

FT	α_{f11}	α_{f22}	K_{f11}	K_{f22}	C_{pf}
FT	.180E-05	.180E-05	.750E+00	.750E+00	.290E+00

Field No.	Field Name	Format	Columns	Description
1	FT	A2	1-2	Mnemonic name
2	α_{f11}	E10.3	4-13	Fiber longitudinal coefficient of thermal expansion
3	α_{f22}	E10.3	14-23	Fiber transverse coefficient of thermal expansion
4	K_{f11}	E10.3	24-33	Fiber longitudinal thermal conductivity
5	K_{f22}	E10.3	34-43	Fiber transverse thermal conductivity
6	C_{pf}	E10.3	44-53	Fiber heat capacity

B.1.5 Fiber Data Record: FS

Description: Defines fiber strength allowable

Format and Example:

FS	S_{f1T}	S_{f1C}	S_{f2T}	S_{f2C}	S_{f12}	S_{f23}
FS	.500E+06	.650E+06	.500E+06	.650E+06	.300E+06	.300E+06

Field No.	Field Name	Format	Columns	Description
1	FS	A2	1-2	Mnemonic name
2	S_{f1T}	E10.3	4-13	Fiber longitudinal tensile strength
3	S_{f1C}	E10.3	14-23	Fiber longitudinal compressive strength
4	S_{f2T}	E10.3	24-33	Fiber transverse tensile strength
5	S_{f2C}	E10.3	34-43	Fiber transverse compressive strength
6	S_{f12}	E10.3	44-53	Fiber in-plane shear strength
7	S	E10.3	54-63	Fiber out-of-plane shear strength

Remarks:

1. In cases where only the experimental tensile strength is available, the following approximate values are used for the compressive and shear strengths:

$$S_C = S_T \quad \text{and} \quad S_S = 0.6\ S_T$$

B.1.6 Fiber Data Record: SIGFO

Description: Defines reference values of fiber stress

Format and Example:

SIGFO	σ_{f11}	σ_{f22}	σ_{f12}	σ_{f23}	σ_{f13}	σ_{f33}
SIGFO	0.	0.	0.	0.	0.	0.

Field No.	Field Name	Format	Columns	Description
1	SIGFO	A5	1-5	Mnemonic name
2	σ_{f11}	E10.3	11-20	Reference longitudinal stress value
3	σ_{f22}	E10.3	21-30	Reference transverse stress value
4	σ_{f12}	E10.3	31-40	Reference in-plane shear stress value
5	σ_{f23}	E10.3	41-50	Reference out-of-plane shear stress value
6	σ_{f13}	E10.3	51-60	Reference out-of-plane shear stress value
7	σ_{f33}	E10.3	61-70	Reference through the thickness stress value

Remarks:

1. The reference values of stress are used in the stress term of the multifactor interaction relationship and are typically set to zero for convenience.

B.1.7 Fiber Data Record: DOTFO

Description: Defines reference values of fiber stress rate

Format and Example:

DOTFO	σ_{f11}	σ_{f22}	σ_{f12}	σ_{f23}	σ_{f13}	σ_{f33}
DOTFO	0.	0.	0.	0.	0.	0.

Field No.	Field Name	Format	Columns	Description
1	DOTFO	A5	1-5	Mnemonic name
2	σ_{f11}	E10.3	11-20	Reference longitudinal stress rate value
3	σ_{f22}	E10.3	21-30	Reference transverse stress rate value
4	σ_{f12}	E10.3	31-40	Reference in-plane shear stress rate value
5	σ_{f23}	E10.3	41-50	Reference out-of-plane shear stress rate value
6	σ_{f13}	E10.3	51-60	Reference out-of-plane shear stress rate value
7	σ_{f33}	E10.3	61-70	Reference through the thickness stress rate value

Remarks:

1. The reference values of stress rates are used in the stress rate term of the multifactor interaction relationship and are typically set to zero for convenience.

B.1.8 Fiber Data Record: EXPONENTS

Description: Defines values of exponents in the multifactor interaction relationship

Format and Example:

EXPONENTS	FEX1	FEX2	FEX3	FEX4	FEX5	FEX6	FEX7	FEX8	FEX9	FEX10
EXPONENTS	0.25	0.25	0.25	0.25	0.25	0.00	0.25	0.25	0.25	0.25

EXPONENTS	FEX11	FEX12	FEX13	FEX14	FEX15	FEX16	FEX17	FEX18	FEX19	FEX20
EXPONENTS	0.25	0.25	0.25	0.25	0.00	0.25	0.25	0.00	0.25	0.25

EXPONENTS	FEX21	FEX22	FEX23	FEX24	FEX25	FEX26	FEX27	FEX28	FEX29	FEX30
EXPONENTS	0.25	0.25	0.25	0.25	0.25	0.25	0.25	0.25	0.25	0.25

EXPONENTS	FEX31
EXPONENTS	0.25

Field No.	Field Name	Format	Columns	Description
Line 1:				
1	EXPONENTS	A9	1-9	Mnemonic name
2	FEX1	F5.2	11-15	Reserved for future use
3	FEX2	F5.2	17-21	Modulus-stress rate exponent
4	FEX3	F5.2	23-27	Modulus-stress exponent
5	FEX4	F5.2	29-33	Modulus-temperature exponent
6	FEX5	F5.2	35-39	Strength-stress rate exponent
7	FEX6	F5.2	41-45	Strength-stress exponent
8	FEX7	F5.2	47-51	Strength-temperature exponent
9	FEX8	F5.2	53-57	Poisson's ratio-stress rate exponent
10	FEX9	F5.2	59-63	Poisson's ratio-stress exponent
11	FEX10	F5.2	65-69	Poisson's ratio-temperature exponent
Line 2:				
1	EXPONENTS	A9	1-9	Mnemonic name
2	FEX11	F5.2	11-15	Reserved for future use
3	FEX12	F5.2	17-21	Reserved for future use
4	FEX13	F5.2	23-27	Reserved for future use
5	FEX14	F5.2	29-33	Heat conductivity-stress rate exponent
6	FEX15	F5.2	35-39	Heat conductivity-stress exponent
7	FEX16	F5.2	41-45	Heat conductivity-temperature exponent
8	FEX17	F5.2	47-51	CTE-stress rate exponent
9	FEX18	F5.2	53-57	CTE-stress rate exponent
10	FEX19	F5.2	59-63	CTE-temperature exponent
11	FEX20	F5.2	65-69	Reserved for future use

Line 3:

1	EXPONENTS	A9	1-9	Mnemonic name
2	FEX21	F5.2	11-15	Reserved for future use
3	FEX22	F5.2	17-21	Reserved for future use
4	FEX23	F5.2	23-27	Reserved for future use
5	FEX24	F5.2	29-33	Reserved for future use
6	FEX25	F5.2	35-39	Reserved for future use
7	FEX26	F5.2	41-45	Reserved for future use
8	FEX27	F5.2	47-51	Reserved for future use
9	FEX28	F5.2	53-57	Reserved for future use
10	FEX29	F5.2	59-63	Reserved for future use
11	FEX30	F5.2	65-69	Reserved for future use

Line 4:

1	EXPONENTS	A9	1-9	Mnemonic name
2	FEX31	F5.2	11-15	Reserved for future use

Remarks:

1. The various exponents listed are used in the multifactor interaction equation (Section 1.6.1). For example FEX4 would be the exponent used to determine the temperature effect on the fiber modulus.

$$\frac{E_{fl1}}{E_{fl1o}} = \left[\frac{T_{Mf} - T}{T_{Mf} - T_o}\right]^{FEX4} \quad \ldots\ldots$$

2. The values of the exponents listed above represent the default values.

3. The locations of the currently used exponents are shown in Table B.1-1 for convenient reference.

Table B.1-1: Location of Exponents in Database File for Fiber

Exponent Field Name (i.e. FEX__)			
Property	Stress Rate	Stress	Temperature
Modulus	2	3	4
Strength	5	6	7
Poisson's Ratio	8	9	10
Heat Conductivity	14	15	16
Coeff. of Thermal Exp.	17	18	19

All other locations are reserved for future use.

B.1.9 Fiber Data Record: OVER

Description: Defines the end of the fiber section in the databank

Format:

```
--------------------------------------------------------------------------------
OVER END OF FIBER PROPERTIES
--------------------------------------------------------------------------------
```

Field No.	Field Name	Format	Columns	Description
1	OVER...	A28	1-28	Mnemonic name

Remarks:

1. This record is used to differentiate between the fiber and matrix sections of the databank. This record is only inserted after the last fiber entry.

B.2 Matrix Entries

B.2.1 Matrix Data Record: CODE

Description: Defines matrix code name

Format and Example:

```
---+-------------------------------------------------------------------------
CODE       COMMENT
---+-------------------------------------------------------------------------
TI15       Optional description of matrix
---+-------------------------------------------------------------------------
```

Field No.	Field Name	Format	Columns	Description
1	CODE	A4	1-4	Matrix code name
2	COMMENT	A76	5-80	Optional description of matrix

Remarks:

1. The CODE for each matrix in the databank must be unique.

B.2.2 Matrix Data Record: MP

Description: Defines matrix physical properties

Format and Example:

```
-+----------+-------------------------------------------------------------------
MP       ρm
-+----------+-------------------------------------------------------------------
MP    .172E+00
-+----------+-------------------------------------------------------------------
```

Field No.	Field Name	Format	Columns	Description
1	MP	A2	1-2	Mnemonic name
2	D	E10.3	4-13	Matrix weight density

B.2.3 Matrix Data Record: ME

Description: Defines matrix elastic properties

Format and Example:

```
-+---------+--------+--------+-------------------------------------------------
ME      Em        νm        αm
-+---------+--------+--------+-------------------------------------------------
ME   .123E+08  .320E+00  .450E-05
-+---------+--------+--------+-------------------------------------------------
```

Field No.	Field Name	Format	Columns	Description
1	ME	A2	1-2	Mnemonic name
2	E_m	E10.3	4-13	Matrix modulus
3	ν_m	E10.3	14-23	Matrix Poisson's ratio
4	α_m	E10.3	24-33	Matrix coefficient of thermal expansion

B.2.4 Matrix Data Record: MT

Description: Defines matrix thermal properties

Format and Example:

```
-+----------+---------+-------------------------------------------------------
MT      K_m        C_pm
-+----------+---------+-------------------------------------------------------
MT    .390E+00 .120E +00
-+----------+---------+-------------------------------------------------------
```

Field No.	Field Name	Format	Columns	Description
1	MT	A2	1-2	Mnemonic name
2	K_m	E10.3	4-13	Matrix thermal conductivity
3	C_{pm}	E10.3	14-23	Matrix heat capacity

B.2.5 Matrix Data Record: MS

Description: Defines matrix strength properties

Format and Example:

MS	S_{mT}	S_{mC}	S_{mS}	ϵ_{mT}	ϵ_{mC}	ϵ_{mS}	ϵ_{mr}
MS	130E+06	.130E+06	.780E+05	.120E+00	.120E+00	.120E+00	.120E+00

Field No.	Field Name	Format	Columns	Description
1	MS	A2	1-2	Mnemonic name
2	S_{mT}	E10.3	4-13	Matrix tensile strength
3	S_{mC}	E10.3	14-23	Matrix compressive strength
4	S_{mS}	E10.3	24-33	Matrix shear strength
5	ϵ_{mT}	E10.3	34-43	Matrix tensile strain
6	ϵ_{mC}	E10.3	44-53	Matrix compressive strain
7	ϵ_{mS}	E10.3	54-63	Matrix shear strain
8	ϵ_{mr}	E10.3	64-73	Matrix torsional strain

Remarks:

1. In cases where only the experimental tensile strength is available, the following approximate values are used for the compressive and shear strengths:

$$S_C = S_T \quad \text{and} \quad S_S = 0.6\ S_T$$

B.2.6 Matrix Data Record: MV

Description: Defines additional matrix thermal properties

Format and Example:

```
-+----------+---------+-------------------------------------------------------
MV      K_v         T_Mm
-+----------+---------+-------------------------------------------------------
MV    .019E+00 .180E +04
-+----------+---------+-------------------------------------------------------
```

Field No.	Field Name	Format	Columns	Description
1	MV	A2	1-2	Mnemonic name
2	K_v	E10.3	4-13	Matrix void thermal conductivity
3	T_{Mm}	E10.3	14-23	Matrix melting temperature

B.2.7 Matrix Data Record: SIGMO

Description: Defines reference values of matrix stresses

Format and Example:

SIGMO	σ_{m11A}	σ_{m22A}	σ_{m22B}	σ_{m22C}	σ_{m12A}	σ_{m12B}	σ_{m12C}
SIGMO	0.0	0.0	0.0	0.0	0.0	0.0	0.0

SIGMO	σ_{m23A}	σ_{m23B}	σ_{m23C}	σ_{m13A}	σ_{m13B}	σ_{m13C}	σ_{m33A}
SIGMO	0.0	0.0	0.0	0.0	0.0	0.0	0.0

SIGMO	σ_{m33B}	σ_{m33C}	σ_{m11B}	σ_{m11C}
SIGMO	0.0	0.0	0.0	0.0

Field No.	Field Name	Format	Columns	Description
Line 1:				
1	SIGMO	A5	1-5	Mnemonic name
2	σ_{m11A}	E10.3	11-20	Reference stress in region m11A
3	σ_{m22A}	E10.3	21-30	Reference stress in region m22A

4	σ_{m22B}	E10.3	31-40	Reference stress in region m22B
5	σ_{m22C}	E10.3	41-50	Reference stress in region m22C
6	σ_{m12A}	E10.3	51-60	Reference stress in region m12A
7	σ_{m12B}	E10.3	61-70	Reference stress in region m12B
8	σ_{m12C}	E10.3	71-80	Reference stress in region m12C

Line 2:

1	SIGMO	A5	1-5	Mnemonic name
2	σ_{m23A}	E10.3	11-20	Reference stress in region m23A
3	σ_{m23B}	E10.3	21-30	Reference stress in region m23B
4	σ_{m23C}	E10.3	31-40	Reference stress in region m23C
5	σ_{m13A}	E10.3	41-50	Reference stress in region m13A
6	σ_{m13B}	E10.3	51-60	Reference stress in region m13B
7	σ_{m13C}	E10.3	61-70	Reference stress in region m13C
8	σ_{m33A}	E10.3	71-80	Reference stress in region m33A

Line 3:

1	SIGMO	A5	1-5	Mnemonic name
2	σ_{m33B}	E10.3	11-20	Reference stress in region m33B
3	σ_{m33C}	E10.3	21-30	Reference stress in region m33C
4	σ_{m11B}	E10.3	31-40	Reference stress in region m11B
5	σ_{m11C}	E10.3	41-50	Reference stress in region m11C

Remarks:

1. The reference values of stress are used in the stress term of the multifactor interaction relationship and are typically set to zero for convenience.

B.2.8 Matrix Data Record: DOTMO

Description: Defines reference values of matrix stress rates

Format and Example:

DOTMO	σ_{m11A}	σ_{m22A}	σ_{m22B}	σ_{m22C}	σ_{m12A}	σ_{m12B}	σ_{m12C}
DOTMO	0.0	0.0	0.0	0.0	0.0	0.0	0.0

DOTMO	σ_{m23A}	σ_{m23B}	σ_{m23C}	σ_{m13A}	σ_{m13B}	σ_{m13C}	σ_{m33A}
DOTMO	0.0	0.0	0.0	0.0	0.0	0.0	0.0

DOTMO	σ_{m33B}	σ_{m33C}	σ_{m11B}	σ_{m11C}
DOTMO	0.0	0.0	0.0	0.0

Field No.	Field Name	Format	Columns	Description
Line 1:				
1	DOTMO	A5	1-5	Mnemonic name
2	σ_{m11A}	E10.3	11-20	Reference stress rate in region m11A
3	σ_{m22A}	E10.3	21-30	Reference stress rate in region m22A

4	σ_{m22B}	E10.3	31-40	Reference stress rate in region m22B
5	σ_{m22C}	E10.3	41-50	Reference stress rate in region m22C
6	σ_{m12A}	E10.3	51-60	Reference stress rate in region m12A
7	σ_{m12B}	E10.3	61-70	Reference stress rate in region m12B
8	σ_{m12C}	E10.3	71-80	Reference stress rate in region m12C

Line 2:

1	DOTMO	A5	1-5	Mnemonic name
2	σ_{m23A}	E10.3	11-20	Reference stress rate in region m23A
3	σ_{m23B}	E10.3	21-30	Reference stress rate in region m23B
4	σ_{m23C}	E10.3	31-40	Reference stress rate in region m23C
5	σ_{m13A}	E10.3	41-50	Reference stress rate in region m13A
6	σ_{m13B}	E10.3	51-60	Reference stress rate in region m13B
7	σ_{m13C}	E10.3	61-70	Reference stress rate in region m13C
8	σ_{m33A}	E10.3	71-80	Reference stress rate in region m33A

Line 3:

1	DOTMO	A5	1-5	Mnemonic name
2	σ_{m33B}	E10.3	11-20	Reference stress rate in region m33B
3	σ_{m33C}	E10.3	21-30	Reference stress rate in region m33C
4	σ_{m11B}	E10.3	31-40	Reference stress rate in region m11B
5	σ_{m11C}	E10.3	41-50	Reference stress rate in region m11C

Remarks:

1. The reference values of stress rates are used in the stress rate term of the multifactor interaction relationship and are typically set to zero for convenience.

B.2.9 Matrix Data Record: EXPONENTS

Description: Defines values of exponents for matrix properties in the multifactor interaction relationship

Format and Example:

```
--------+-----+-----+-----+-----+-----+-----+-----+-----+-----+-----+----------
EXPONENTS  MEX1  MEX2  MEX3  MEX4  MEX5  MEX6  MEX7  MEX8  MEX9 MEX10
--------+-----+-----+-----+-----+-----+-----+-----+-----+-----+-----+----------
EXPONENTS  0.50  0.50  0.50  0.50  0.50  0.00  0.50  0.50  0.50  0.50
--------+-----+-----+-----+-----+-----+-----+-----+-----+-----+-----+----------

--------+-----+-----+-----+-----+-----+-----+-----+-----+-----+-----+----------
EXPONENTS MEX11 MEX12 MEX13 MEX14 MEX15 MEX16 MEX17 MEX18 MEX19 MEX20
--------+-----+-----+-----+-----+-----+-----+-----+-----+-----+-----+----------
EXPONENTS  0.50  0.50  0.50  0.50  0.00  0.50  0.50  0.00  0.50  0.50
--------+-----+-----+-----+-----+-----+-----+-----+-----+-----+-----+----------

--------+-----+-----+-----+-----+-----+-----+-----+-----+-----+-----+----------
EXPONENTS MEX21 MEX22 MEX23 MEX24 MEX25 MEX26 MEX27 MEX28 MEX29 MEX30
--------+-----+-----+-----+-----+-----+-----+-----+-----+-----+-----+----------
EXPONENTS  0.50  0.50  0.50  0.50  0.50  0.50  0.50  0.50  0.50  0.50
--------+-----+-----+-----+-----+-----+-----+-----+-----+-----+-----+----------

--------+-----+-----+-----+-----+-----+-----+-----+-----+-----+-----+----------
EXPONENTS MEX31
--------+-----+-----+-----+-----+-----+-----+-----+-----+-----+-----+----------
EXPONENTS  0.50
--------+-----+-----+-----+-----+-----+-----+-----+-----+-----+-----+----------
```

Field No.	Field Name	Format	Columns	Description
Line 1:				
1	EXPONENTS	A9	1-9	Mnemonic name
2	MEX1	F5.2	11-15	Reserved for future use
3	MEX2	F5.2	17-21	Modulus-stress rate exponent
4	MEX3	F5.2	23-27	Modulus-stress exponent
5	MEX4	F5.2	29-33	Modulus-temperature exponent
6	MEX5	F5.2	35-39	Strength-stress rate exponent
7	MEX6	F5.2	41-45	Strength-stress exponent
8	MEX7	F5.2	47-51	Strength-temperature exponent
9	MEX8	F5.2	53-57	Poisson's ratio-stress rate exponent
10	MEX9	F5.2	59-63	Poisson's ratio-stress exponent
11	MEX10	F5.2	65-69	Poisson's ratio-temperature exponent
Line 2:				
1	EXPONENTS	A9	1-9	Mnemonic name
2	MEX11	F5.2	11-15	Reserved for future use
3	MEX12	F5.2	17-21	Reserved for future use
4	MEX13	F5.2	23-27	Reserved for future use
5	MEX14	F5.2	29-33	Heat conductivity-stress rate exponent
6	MEX15	F5.2	35-39	Heat conductivity-stress exponent
7	MEX16	F5.2	41-45	Heat conductivity-temperature exponent
8	MEX17	F5.2	47-51	CTE-stress rate exponent
9	MEX18	F5.2	53-57	CTE-stress rate exponent
10	MEX19	F5.2	59-63	CTE-temperature exponent
11	MEX20	F5.2	65-69	Reserved for future use

Line 3:

1	EXPONENTS	A9	1-9	Mnemonic name
2	MEX21	F5.2	11-15	Reserved for future use
3	MEX22	F5.2	17-21	Reserved for future use
4	MEX23	F5.2	23-27	Reserved for future use
5	MEX24	F5.2	29-33	Reserved for future use
6	MEX25	F5.2	35-39	Reserved for future use
7	MEX26	F5.2	41-45	Reserved for future use
8	MEX27	F5.2	47-51	Reserved for future use
9	MEX28	F5.2	53-57	Reserved for future use
10	MEX29	F5.2	59-63	Reserved for future use
11	MEX30	F5.2	65-69	Reserved for future use

Line 4:

1	EXPONENTS	A9	1-9	Mnemonic name
2	MEX31	F5.2	11-15	Reserved for future use

Remarks:

1. The various exponents listed are used in the multifactor interaction equation. For example MEX3 would be the exponent used to determine the stress effect on the matrix modulus.

$$\frac{E_{m11}}{E_{m11_o}} = \left[\frac{S_{m11}-\sigma_{m11}}{S_{m11}-\sigma_{m11_o}}\right]^{MEX3} \cdots\cdots$$

2. The values of the exponents listed above represent the default values.
3. The locations of the currently used exponents are shown in Table B.2-1 for convenient reference.

Table B.2-1: Location of Exponents in Database File for Matrix

Exponent Field Name (i.e. MEX__)			
Property	Stress Rate	Stress	Temperature
Modulus	2	3	4
Strength	5	6	7
Poisson's Ratio	8	9	10
Heat Conductivity	14	15	16
Coeff. of Thermal Exp.	17	18	19

All other locations are reserved for future use.

B.2.10 Matrix Data Record: OVER

Description: Defines the end of the matrix section in the databank

Format:

OVER END OF MATRIX PROPERTIES

Field No.	Field Name	Format	Columns	Description
1	OVER...	A28	1-28	Mnemonic name

Remarks:

1.This record is used to differentiate between the matrix and interphase sections of the databank. This record is inserted only after the last matrix entry.

B.3 Interphase Entries

B.3.1 Interphase Data Record: (No Mnemonic)

Description: Defines optional interphase description

Format and Example:

```
-------+-------+-------+-------+-------+-------+-------+-------+-------+-------+
TITLE
-------+-------+-------+-------+-------+-------+-------+-------+-------+-------+
Description of interphase
-------+-------+-------+-------+-------+-------+-------+-------+-------+-------+
```

Field No.	Field Name	Format	Columns	Description
1	TITLE	A80	1-80	Interphase description

Remarks:

1. Unlike the fiber and matrix, which are distinguished by their code names, the interphases are defined by their thickness (see DP record).

B.3.2 Interphase Data Record: DP

Description: Defines interphase physical properties

Format and Example:

```
-+----------+---------+-------------------------------------------------------
DP    ρd          td
-+----------+---------+-------------------------------------------------------
DP .172E+00  .020E+00
-+----------+---------+-------------------------------------------------------
```

Field No.	Field Name	Format	Columns	Description
1	DP	A2	1-2	Mnemonic name
2	ρ_d	E10.3	4-13	Interphase weight density
3	t_d	E10.3	14-23	Interphase thickness

Remarks:

1. The input data file uses the interface thickness to select the desired interphase. This means that the thickness of the desired interphase must be unique.

B.3.3 Interphase Data Record: DE

Description: Defines interphase elastic properties

Format and Example:

```
-+----------+---------+---------+-----------------------------------------------
DE      Ed         νd         αd
-+----------+---------+---------+-----------------------------------------------
DE .300E+07  .320E+00  .450E-05
-+----------+---------+---------+-----------------------------------------------
```

Field No.	Field Name	Format	Columns	Description
1	DE	A2	1-2	Mnemonic name
2	E_d	E10.3	4-13	Interphase modulus
3	ν_d	E10.3	14-23	Interphase poisson's ratio
4	α_d	E10.3	24-33	Interphase coefficient of thermal expansion

B.3.4 Interphase Data Record: DT

Description: Defines interphase thermal properties

Format and Example:

```
-+----------+---------+-------------------------------------------------------
DT      Kd        Cpd
-+----------+---------+-------------------------------------------------------
DT .390E+00  .120E+00
-+----------+---------+-------------------------------------------------------
```

Field No.	Field Name	Format	Columns	Description
1	DT	A2	1-2	Mnemonic name
2	K_d	E10.3	4-13	Interphase thermal conductivity
3	C_{pd}	E10.3	14-23	Interphase heat capacity

B.3.5 Interphase Data Record: DS

Description: Defines interphase strength properties

Format and Example:

DS	S_{dT}	S_{dC}	S_{dS}	ϵ_{dT}	ϵ_{dC}	ϵ_{dS}	ϵ_{dr}
DS	.325E+05	.325E+05	.195E+05	.120E+00	.120E+00	.120E+00	.120E+00

Field No.	Field Name	Format	Columns	Description
1	DS	A2	1-2	Mnemonic name
2	S_{dT}	E10.3	4-13	Interphase tensile strength
3	S_{dC}	E10.3	14-23	Interphase compressive strength
4	S_{dS}	E10.3	24-33	Interphase shear strength
5	ϵ_{dT}	E10.3	34-43	Interphase tensile strain
6	ϵ_{dC}	E10.3	44-53	Interphase compressive strain
7	ϵ_{dS}	E10.3	54-63	Interphase shear strain
8	ϵ_{dr}	E10.3	64-73	Interphase torsional strain

Remarks:

1. In cases where only the experimental tensile strength is available, the following approximate values are used for the compressive and shear strengths:

$$S_C = S_T \quad \text{and} \quad S_S = 0.6\ S_T$$

B.3.6 Interphase Data Record: DV

Description: Defines additional interphase thermal properties

Format and Example:

```
-+----------+---------+-------------------------------------------------------------
DV      Kv        TMd
-+----------+---------+-------------------------------------------------------------
DV .019E+00  .180E+04
-+----------+---------+-------------------------------------------------------------
```

Field No.	Field Name	Format	Columns	Description
1	DV	A2	1-2	Mnemonic name
2	K_v	E10.3	4-13	Interphase void thermal conductivity
3	T_{Md}	E10.3	14-23	Interphase melting temperature

B.3.7 Interphase Data Record: SIGDO

Description: Defines reference values of interphase stresses

Format and Example:

SIGDO	σ_{d11B}	σ_{d22B}	σ_{d22C}	σ_{d12B}	σ_{d12C}	σ_{d23B}	σ_{d23C}
SIGDO	0.0	0.0	0.0	0.0	0.0	0.0	0.0

SIGDO	σ_{d13B}	σ_{d13C}	σ_{d33B}	σ_{d33C}	σ_{d11C}		
SIGDO	0.0	0.0	0.0	0.0	0.0		

Field No.	Field Name	Format	Columns	Description
Line 1:				
1	SIGDO	A5	1-5	Mnemonic name
2	σ_{d11B}	E10.3	11-20	Reference stress in region d11B
3	σ_{d22B}	E10.3	21-30	Reference stress in region d22B
4	σ_{d22C}	E10.3	31-40	Reference stress in region d22C
5	σ_{d12B}	E10.3	41-50	Reference stress in region d12B
6	σ_{d12C}	E10.3	51-60	Reference stress in region d12C
7	σ_{d23B}	E10.3	61-70	Reference stress in region d23B
8	σ_{d23C}	E10.3	71-80	Reference stress in region d23C

Line 2:

1	SIGDO	A5	1-5	Mnemonic name
2	σ_{d13B}	E10.3	11-20	Reference stress in region d13B
3	σ_{d13C}	E10.3	21-30	Reference stress in region d13C
4	σ_{d33B}	E10.3	31-40	Reference stress in region d33B
5	σ_{d33C}	E10.3	41-50	Reference stress in region d33C
6	σ_{d11C}	E10.3	51-60	Reference stress in region d11C

Remarks:

1. The reference values of the stresses are used in the stress term of the multifactor interaction relationship and are typically set to zero for convenience.

B.3.8 Interphase Data Record: DOTDO

Description: Defines reference values of interphase stress rates

Format and Example:

DOTDO	σ_{d11B}	σ_{d22B}	σ_{d22C}	σ_{d12B}	σ_{d12C}	σ_{d23B}	σ_{d23C}
DOTDO	0.0	0.0	0.0	0.0	0.0	0.0	0.0

DOTDO	σ_{d13B}	σ_{d13C}	σ_{d33B}	σ_{d33C}	σ_{d11C}		
DOTDO	0.0	0.0	0.0	0.0	0.0		

Field No.	Field Name	Format	Columns	Description
Line 1:				
1	DOTDO	A5	1-5	Mnemonic name
2	σ_{d11B}	E10.3	11-20	Reference stress rate in region d11B
3	σ_{d22B}	E10.3	21-30	Reference stress rate in region d22B
4	σ_{d22C}	E10.3	31-40	Reference stress rate in region d22C
5	σ_{d12B}	E10.3	41-50	Reference stress rate in region d12B

6	σ_{d12C}	E10.3	51-60	Reference stress rate in region d12C
7	σ_{d23B}	E10.3	61-70	Reference stress rate in region d23B
8	σ_{d23C}	E10.3	71-80	Reference stress rate in region d23C

Line 2:

1	DOTDO	A5	1-5	Mnemonic name
2	σ_{d13B}	E10.3	11-20	Reference stress rate in region d13B
3	σ_{d13C}	E10.3	21-30	Reference stress rate in region d13C
4	σ_{d33B}	E10.3	31-40	Reference stress rate in region d33B
5	σ_{d33C}	E10.3	41-50	Reference stress rate in region d33C
6	σ_{d11C}	E10.3	51-60	Reference stress rate in region d11C

Remarks:

1. The reference values of the stress rates are used in the stress rate term of the multifactor interaction relationship and are typically set to zero for convenience.

B.3.9 Interphase Data Record: EXPONENTS

Description: Defines values of exponents for interphase properties in multifactor interaction relationship

Format and Example:

EXPONENTS	DEX1	DEX2	DEX3	DEX4	DEX5	DEX6	DEX7	DEX8	DEX9	DEX10
EXPONENTS	0.50	0.50	0.50	0.50	0.50	0.00	0.50	0.50	0.50	0.50

EXPONENTS	DEX11	DEX12	DEX13	DEX14	DEX15	DEX16	DEX17	DEX18	DEX19	DEX20
EXPONENTS	0.50	0.50	0.50	0.50	0.00	0.50	0.50	0.00	0.50	0.50

EXPONENTS	DEX21	DEX22	DEX23	DEX24	DEX25	DEX26	DEX27	DEX28	DEX29	DEX30
EXPONENTS	0.50	0.50	0.50	0.50	0.50	0.50	0.50	0.50	0.50	0.50

EXPONENTS	DEX31
EXPONENTS	0.50

Field No.	Field Name	Format	Columns	Description
Line 1:				
1	EXPONENTS	A9	1-9	Mnemonic name
2	DEX1	F5.2	11-15	Reserved for future use
3	DEX2	F5.2	17-21	Modulus-stress rate exponent
4	DEX3	F5.2	23-27	Modulus-stress exponent
5	DEX4	F5.2	29-33	Modulus-temperature exponent
6	DEX5	F5.2	35-39	Strength-stress rate exponent
7	DEX6	F5.2	41-45	Strength-stress exponent
8	DEX7	F5.2	47-51	Strength-temperature exponent
9	DEX8	F5.2	53-57	Poisson's ratio-stress rate exponent
10	DEX9	F5.2	59-63	Poisson's ratio-stress exponent
11	DEX10	F5.2	65-69	Poisson's ratio-temperature exponent
Line 2:				
1	EXPONENTS	A9	1-9	Mnemonic name
2	DEX11	F5.2	11-15	Reserved for future use
3	DEX12	F5.2	17-21	Reserved for future use
4	DEX13	F5.2	23-27	Reserved for future use
5	DEX14	F5.2	29-33	Heat conductivity-stress rate exponent
6	DEX15	F5.2	35-39	Heat conductivity-stress exponent
7	DEX16	F5.2	41-45	Heat conductivity-temperature exponent
8	DEX17	F5.2	47-51	CTE-stress rate exponent
9	DEX18	F5.2	53-57	CTE-stress rate exponent
10	DEX19	F5.2	59-63	CTE-temperature exponent
11	DEX20	F5.2	65-69	Reserved for future use

Line 3:

1	EXPONENTS	A9	1-9	Mnemonic name
2	DEX21	F5.2	11-15	Reserved for future use
3	DEX22	F5.2	17-21	Reserved for future use
4	DEX23	F5.2	23-27	Reserved for future use
5	DEX24	F5.2	29-33	Reserved for future use
6	DEX25	F5.2	35-39	Reserved for future use
7	DEX26	F5.2	41-45	Reserved for future use
8	DEX27	F5.2	47-51	Reserved for future use
9	DEX28	F5.2	53-57	Reserved for future use
10	DEX29	F5.2	59-63	Reserved for future use
11	DEX30	F5.2	65-69	Reserved for future use

Line 4:

1	EXPONENTS	A9	1-9	Mnemonic name
2	DEX31	F5.2	11-15	Reserved for future use

Remarks:

1. The various exponents listed are used in the multifactor interaction equation. For example DEX4 would be the exponent used to determine the stress effect on the matrix modulus.

$$\frac{E_{d11}}{E_{d11_o}} = \left[\frac{S_{d11}-\sigma_{d11}}{S_{d11}-\sigma_{d11_o}}\right]^{DEX3}.....$$

2. The values of the exponents listed above represent the default values.

3. The locations of the currently used exponents are shown in Table B.3-1 for convenient reference.

Table B.3-1: Location of Exponents in Database File for Interphase

Exponent Field Name (i.e. DEX__)			
Property	Stress Rate	Stress	Temperature
Modulus	2	3	4
Strength	5	6	7
Poisson's Ratio	8	9	10
Heat Conductivity	14	15	16
Coeff. of Thermal Exp.	17	18	19

All other locations are reserved for future use.

REPORT DOCUMENTATION PAGE

Form Approved
OMB No. 0704-0188

Public reporting burden for this collection of information is estimated to average 1 hour per response, including the time for reviewing instructions, searching existing data sources, gathering and maintaining the data needed, and completing and reviewing the collection of information. Send comments regarding this burden estimate or any other aspect of this collection of information, including suggestions for reducing this burden, to Washington Headquarters Services, Directorate for Information Operations and Reports, 1215 Jefferson Davis Highway, Suite 1204, Arlington, VA 22202-4302, and to the Office of Management and Budget, Paperwork Reduction Project (0704-0188), Washington, DC 20503.

1. AGENCY USE ONLY (*Leave blank*)	2. REPORT DATE	3. REPORT TYPE AND DATES COVERED
	May 1993	Technical Memorandum

4. TITLE AND SUBTITLE

Metal Matrix Laminate Tailoring (MMLT) Code: User's Manual

5. FUNDING NUMBERS

WU-510-01-50

6. AUTHOR(S)

M.R. Morel, D.A. Saravanos, and P.L.N. Murthy

7. PERFORMING ORGANIZATION NAME(S) AND ADDRESS(ES)

National Aeronautics and Space Administration
Lewis Research Center
Cleveland, Ohio 44135-3191

8. PERFORMING ORGANIZATION REPORT NUMBER

E-7644

9. SPONSORING/MONITORING AGENCY NAME(S) AND ADDRESS(ES)

National Aeronautics and Space Administration
Washington, D.C. 20546-0001

10. SPONSORING/MONITORING AGENCY REPORT NUMBER

NASA TM-106052

11. SUPPLEMENTARY NOTES

M.R. Morel, Sverdrup Technology, Inc., Lewis Research Center, 2001 Aerospace Parkway, Brook Park, Ohio 44142; D.A. Saravanos, Ohio Aerospace Institute, 22800 Cedar Point Road, Brook Park, Ohio 44142; and P.L.N. Murthy, NASA Lewis Research Center. Responsible person, P.L.N. Murthy, (216) 433-4000.

12a. DISTRIBUTION/AVAILABILITY STATEMENT

Unclassified - Unlimited
Subject Category 24

12b. DISTRIBUTION CODE

13. ABSTRACT (*Maximum 200 words*)

This report is the User's Manual for the Metal Matrix Laminate Tailoring (MMLT) program. The code is capable of tailoring the fabrication process, constituent characteristics, and laminate parameters (individually or concurrently) for a wide variety of metal matrix composite (MMC) materials, to improve the performance and identify trends or behavior of MMCs under different thermo-mechanical loading conditions. This document is meant to serve as a guide in the use of the MMLT code. Detailed explanations of the composite mechanics and tailoring analysis are beyond the scope of this document, and may be found in the references. MMLT has been developed by the Structural Mechanics Branch at NASA Lewis Research Center (LeRC).

14. SUBJECT TERMS

Composites; Metal matrix; Fabrication; Processing; Tailoring; Optimization; Laminate; Thermal stress; Residual stress; Interphase; Grading

15. NUMBER OF PAGES
132

16. PRICE CODE
A07

17. SECURITY CLASSIFICATION OF REPORT	18. SECURITY CLASSIFICATION OF THIS PAGE	19. SECURITY CLASSIFICATION OF ABSTRACT	20. LIMITATION OF ABSTRACT
Unclassified	Unclassified	Unclassified	