NASA TN D-718

TECHNICAL NOTE

D-718

IRRADIATION EFFECTS OF 22 AND 240 MEV PROTONS ON SEVERAL TRANSISTORS AND SOLAR CELLS

By W. C. Hulten, W. C. Honaker, and John L. Patterson

Langley Research Center
Langley Field, Va.

NATIONAL AERONAUTICS AND SPACE ADMINISTRATION

WASHINGTON April 1961

NATIONAL AERONAUTICS AND SPACE ADMINISTRATION

TECHNICAL NOTE D-718

IRRADIATION EFFECTS OF 22 AND 240 MEV PROTONS ON SEVERAL TRANSISTORS AND SOLAR CELLS

By W. C. Hulten, W. C. Honaker, and John L. Patterson

SUMMARY

The work covered in this report has been directed toward the investigation of the irradiation effects of 22 and 240 Mev protons on several transistors, solar cells, resistors, and condensers to be used in the space radiation environment. The experimental data indicated definite detrimental effects on transistors and solar cells but no apparent effects on the types of resistors and condensers tested. The detrimental effects are of two distinct types: transient and permanent.

INTRODUCTION

The presence of high-energy particles (protons and electrons) in the outer space environment poses many problems for those concerned with the exploration of outer space. Instrumented satellites and space probes have been utilized to gather a limited amount of important scientific data on the origin, composition, distribution, energy spectra, and time variation of the energetic particles in space. (See refs. 1, 2, and 3.) In view of the experimental findings and theories of well-known authorities it was believed that an investigation of the effects of space radiation should be undertaken. A limited irradiation-effects program with primary emphasis on long-term (1-month to 10-year) effects on orbital payloads has therefore been initiated. Since the current research program at the Langley Research Center includes instrumented payloads for space experiments, it was decided to evaluate the effects of irradiation on instrumentation components slated for use in these experiments. On the basis of present knowledge of the composition of the space radiation, it was believed that simulation of the proton spectra would provide the most important missing data at this time. It is presently accepted that the principal components of the space radiation are protons and electrons, the more energetic particles all being protons.

This report covers the first two experiments of the irradiation-effects program with results from tests conducted in two accelerators

which produce the 22 and 240 Mev portions of the radiation-belt proton spectrum. The initial (no. 1) experiment, conducted August 1, 1960, in the 22 Mev proton accelerator at the Oak Ridge National Laboratory (ORNL), was designed to define some gross limits of irradiation damage on transistors, solar cells, resistors, and condensers and to indicate the area into which the program should be directed. The flux levels in this experiment were relatively high as compared with those in the second (no. 2) experiment conducted October 11, 1960, in the 240 Mev proton accelerator at the University of Rochester. It was made clear from the in-beam monitoring of the transistors that the relatively high flux levels in the no. 1 experiment produced greater ionization within the transistors, or in-beam transient effects. These in-beam transient effects made it impossible to obtain information on permanent damage from the in-beam data of the no. 1 experiment.

The authors are indebted to Dr. J. J. Pinajian and Mr. Frank DeCarlo of ORNL and to Dr. Ernst Heer, Dr. Fred Lobkowicz, and Mr. R. W. Mortenson of the University of Rochester for their valuable assistance and many courtesies extended during the progress of these tests at their respective laboratories.

SYMBOLS

I_b base current, μa

I_c collector current, ma

I_{ceo} collector-to-emitter leakage current, base open, μa

I_{co} collector-to-base leakage current, emitter open, μa

DESCRIPTION OF APPARATUS

The cyclotron at the Oak Ridge National Laboratory is capable of producing proton energies up to 22 Mev at beam currents up to 2.5 milliamperes $\left(1.67 \times 10^{16} \text{ protons/sec}\right)$. The primary use of this machine by outside concerns is for radioisotope production. The dees are 86 inches in diameter and are unique in that they are located between the magnets in a vertical position. The proton beam is piped approximately 40 feet from the dees to a shielded room to eliminate the possibility of background radiation from the machine affecting the specimens. The entire experimental setup is shown schematically in figure 1. The test specimens

were mounted on an aluminum disk (figs. 2 and 3) and attached to a motor shaft (fig. 4) which could be remotely programed to orient the specimens in the proton beam for the desired time intervals (table I). The transistor parameters were monitored during irradiation and time histories were obtained with a direct writing recorder. The transistor circuits used are shown in figures 5 and 6.

At the University of Rochester the cyclotron is of the synchronous type with a 130-inch diameter and produces proton energies up to 240 Mev. The machine is used primarily for proton-scattering experiments in nuclear physics. The proton flux in this machine is approximately 8.6×10^6 protons/cm^2/sec and the beam area was large enough to permit the irradiation of several components simultaneously. The general layout for the University of Rochester test is shown in figure 7. A number of transistors and mounted solar cells were attached to a bracket of high-purity aluminum (to minimize the production of radioisotopes in the bracket) which terminated at a plug-in junction (fig. 8). From this junction box, shielded cables transmitted electrical parameters approximately 300 feet to the cyclotron control room, where they were visually displayed and recorded by means of the instrumentation shown in figure 9. A schematic diagram of the circuit in which the parameters were measured is shown in figure 10.

TRANSISTORS

Procedure

The data obtained from the two experiments consisted of in-beam monitoring (time histories) and pretesting and post-testing measurements. In-beam monitoring was accomplished only on the transistors and consisted of the measurement of collector current I_c and the leakage current I_{ceo} in experiment 1, with the leakage current I_{co} being added to the parameters measured in experiment 2. These parameters were recorded on a direct writing oscillograph. Readout instrumentation utilized during in-beam monitoring and the pretest and post-test instruments have an accuracy of ±2 percent of full scale. The proton-beam current in both accelerators was constant to within ±5 percent.

During experiment 1 at ORNL, specimens were mounted on the disk (fig. 2) and positioned in the beam by means of a television system and a zinc sulfide phosphor. The phosphor was placed on the disk in a vacant position and alined near the beam pipe exit. A beam was then obtained, causing the phosphor to glow and become visible on the television monitor. The beam cross section (circular) could then be marked on the

television monitor with a grease pencil, and each specimen could be positioned so that it would fall near the center of the circle inscribed on the face of the television monitor. During the tests the beam flux was monitored and controlled by utilizing a Faraday cup mounted behind the irradiated specimens. A servo system and disk motor assembly (fig. 4) permitted the programing of each specimen into the beam for various time intervals from 1 to 15 minutes at a flux of 2.5×10^{10} protons/cm^2/sec. These simulated dosages correspond to various orbits from a few months to several years in the most intense region of the inner radiation belt. In experiment 2 at the University of Rochester the test setup varied from that used at ORNL only in the method of mounting the specimens in the beam and the beam flux $\left(8.6 \times 10^6 \text{ protons/cm}^2\text{/sec}\right)$. Because of the larger beam area available it was possible to mount several specimens on the assembly shown in figure 8 and irradiate them simultaneously. The total irradiation time at the flux of 8.6×10^6 protons/cm^2/sec was approximately 32 hours; 14 hours are required to simulate a 1-year exposure in the center of the radiation belt.

Discussion and Results

As pointed out briefly in the introduction, the initial experiments run in the 22 Mev cyclotron at ORNL exposed a number of transistors and solar cells at somewhat extreme flux levels in order to set some boundaries for later more refined experiments. This first experiment provided valuable experience that greatly improved experiment 2 at the University of Rochester.

The transistors irradiated in the 22 Mev cyclotron at ORNL showed extreme in-beam transient effects which were probably caused by the ionization within the transistors, the ionization rate being directly proportional to flux. The in-beam transient effects can be seen from the plots of collector current I_c in figure 11. During the irradiation the proton beam was cut off for a period of 1 minute and the change in collector current of one transistor was recorded (fig. 11) to determine whether the high rate of collector-current changes was of a permament nature or was a transient result of the high flux. In view of this check it may be concluded that the high flux level affected the in-beam data obtained in that the high ionization rate made it impossible to assess the permanent damage from the in-beam records. The permanent damage experienced by the transistors may be seen from the pretest and post-test tabulation of I_c and I_{ceo} (table I). The absence of significant transient effects in experiment 2 at the University of Rochester at considerably lower flux levels indicates that the high rate of collector-current change during the in-beam monitoring at ORNL was due to the

higher proton flux. Transistors required to operate in the space radiation environment would not experience such a high flux as that used in the ORNL test; however, the test served its planned purpose by establishing limits for further testing.

Testing at the University of Rochester included the irradiation of four PNP and three NPN transistors. One transistor specimen, no. 176, was not monitored during irradiation but was checked before and after. Shutting off the proton beam at eight points during the irradiation process and observing the monitored transistor parameters for changes from beam-off to beam-on indicated that there were no significant transient effects within reading accuracy at this energy and flux level.

In figure 12 the high-frequency 50-megacycle transistors (nos. 1 and 3) were not appreciably affected by the irradiation process. The medium-frequency 3-megacycle transistors (nos. 17, 42, and 52) showed considerably greater effects due to irradiation. Changes in leakage current I_{co} during and after irradiation were negligible. Since there was no measurable change in the leakage current I_{co} (less than 1 microampere) it can be assumed that the decrease in collector current I_c reflected a loss in gain for these transistors. Radiation damage to the low-frequency 0.5-megacycle transistors (nos. 175 and 176) was even more pronounced. Leakage currents also increased by large percentages (table II). The sudden rise in collector current indicated in figure 12 for specimen 175 may be the result of the very high leakage current recorded during the early phase of the irradiation process.

From the data collected it may be assumed that the higher frequency transistors are less susceptible to radiation of this level. A comparison of the radiation damage to transistors in the 22 Mev and 240 Mev cyclotrons indicates that the low-energy particles cause greater permanent damage to transistors than the higher energy particles. This result may be directly related to the greater cross section for lower energy protons.

RESISTORS AND CONDENSERS

Procedure

The procedure for the resistor and condenser test differed from that for the transistor test only in that no in-beam monitoring was attempted during irradiation.

Discussion and Results

Several resistors and condensers were irradiated in the 22 Mev proton beam at ORNL, and no permanent effects were indicated. (See table III.)

SOLAR CELLS

Procedure

The type of solar cells and the mounting conditions were the same as on the Scout micrometeoroid satellite. The cells were 1 by 2 centimeters, P on N junction, and nominally 8 percent efficient. They had no coatings or glass covers, and were manufactured by International Rectifier Corporation. They were cemented to 1/8-inch-thick AZ31B-O magnesium-alloy strips having Dow 17 anodized coatings. In each of the three solar-cell tests four cells were included, two with simulated windows and two without. The windows were of commercial-grade fused quartz, 1/16 inch thick, and supplied by the Amersil Division of Engelhard Industries, Inc. They were spaced approximately 1/16 inch from the cells. Figure 13 shows a typical test cell.

In the first test, the cells were individually irradiated for 5 minutes in the ORNL 22 Mev cyclotron with a proton-beam flux of 6.5×10^{10} protons/cm^2/sec $\left(1.95 \times 10^{13}\right.$ protons/cm^2 total$\left.\right)$. Figure 3 shows the mounting arrangement. The cells were alined normal to the proton beam, which was found to be approximately 1/2 inch in diameter. Hence, the entire active cell area was not irradiated with the measured flux but the test did give an indication of the heavy damage that could be expected.

In the next two tests, made in the University of Rochester 240 Mev cyclotron, the proton-beam flux was considerably lower - 7.5×10^6 protons/cm^2/sec. One of the groups of four cells was irradiated with a total integrated flux of 3.7×10^{11} protons/cm^2 and the other group of four cells was irradiated with 5.0×10^{11} protons/cm^2. All of the cells were alined normal to the beam, and the beam was large enough to irradiate the four cells of each group simultaneously. Since there was some variation of flux intensity across the beam, the flux values given are those averaged over the cell area by using curves of the measured beam profile.

When checking the cells before and after irradiation, they were illuminated through a 1-inch-thick water filter with a photoflood lamp

at a filament temperature of 2,900° K. The illumination level was adjusted to 116 mw/cm^2, as measured with a standardized solar cell, to simulate the solar radiation intensity in space near the earth.

Discussion and Results

Figure 14 shows the variation of current and of power with voltage for a typical cell before and after irradiation, obtained by continuously varying a resistive load. The shape of the curves was not greatly altered by irradiation. Before and after irradiation, measurements were made on each cell of short-circuit current, open-circuit voltage, and power output at 0.35 volt (the voltage per cell in the micrometeoroid-satellite power supply). These check points are shown in figure 14, and the percentage reductions of the measured values due to irradiation are given in table IV for each cell tested. The heavy 22 Mev irradiation visibly darkened the quartz in a nonuniform manner. This darkening can be seen in figure 13. Table IV shows that the quartz windows gave a little protection to the cells at 22 Mev, but the effect was approximately nullified by the darkened quartz. The 240 Mev radiation did not darken the quartz and hence the reductions obtained with and without the windows were the same.

The results were not corrected for the shift in the spectral response of the cells due to the irradiation. Approximate measurements of the irradiated cells indicated shifts in the spectral-response curves toward the shorter wavelengths. This indicates that somewhat lower values of damage would have been measured if a true simulation of solar radiation had been available.

The temperature of the cells was not monitored during the irradiation tests. However, a reasonably heavy heat sink was used, and the temperature rise due to the beam energy was estimated to be less than 1° F.

Subsequent checks were made to see whether the cells had a tendency to recover from the damage at normal operating temperatures. At room temperature, the output of the cells given the heavy 22 Mev radiation changed very little after 3 months, while those exposed to the 240 Mev beam had about 4 percent power recovery after 3 weeks. After $3\frac{1}{2}$ days at 130° F, all the cells showed slight improvement - about 2 percent power recovery.

CONCLUDING REMARKS

From the results of the first two experiments it is evident that protons present a major problem in the design of electronic circuits containing semiconductor devices for space missions. The data in this report cover only two discrete energy bands of a few Mev (22 ± 0.6 Mev and 240 ± 5 Mev) and clearly indicate that work should continue to cover the entire proton spectrum in order to arrive at an integrated dose-damage relation for the radiation-belt protons. At this point no recommendation can be made as to corrective measures that might be taken to extend the life of semiconductors other than shielding, which is not applicable in the case of solar cells.

Langley Research Center,
National Aeronautics and Space Administration,
Langley Field, Va., December 14, 1960.

REFERENCES

1. Rothwell, Pamela, and McIlwain, Carl E.: Magnetic Storms and the Van Allen Radiation Belts - Observations From Satellite 1958ε (Explorer IV). Jour. Geophys. Res., vol. 65, no. 3, Mar. 1960, pp. 799-806.

2. Freden, Stanley C., and White, R. Stephen: Protons in the Earth's Magnetic Field. Phys. Rev. Letters, vol. 3, no. 1, July 1, 1959, pp. 9-11.

3. Van Allen, James A., and Frank, Louis A.: Radiation Around the Earth to a Radial Distance of 107,000 km. Nature, vol. 183, no. 4659, Feb. 14, 1959, pp. 430-434.

TABLE I.- TRANSISTORS IRRADIATED IN ORNL 22 MEV CYCLOTRON AT 0.017 MICROAMPERE

BEAM CURRENT (2.5×10^{10} PROTONS/CM^2/SEC)

Transistor	Specimen number	Type	Total flux, protons/cm^2	Beam time, min	Base current, I_b, μa	Collector current, I_c, ma		Change in I_c, percent	Leakage current, I_{ceo}, μa		Change in I_{ceo}, percent
						Before irradiation	After irradiation		Before irradiation	After irradiation	
*2N128	217	PNP	7.5×10^{12}	5	20	1.53	1.31	-14	29	28	-3
*2N128	219	PNP	1.5×10^{13}	10	20	.74	Destroyed		22	Destroyed	
*2N128	200	PNP	2.25×10^{13}	15	20	.71	.25	-65	15	10	-33
2N393	32	PNP	7.5×10^{12}	5	0				12	250	1,980
2N393	100	PNP	1.5×10^{13}	10	0				10	Destroyed	
2N1303	11	PNP	3×10^{12}	2.5	30	6.60	.62	-91	75	86	13
2N1303	54	PNP	3×10^{12}	2.5	30	4.66	3.04	-35	50	890	1,650
2N1303	52	PNP	4.73×10^{12}	3.16	30	4.08	1.12	-73	22	260	1,090
2N146	61	NPN	7.5×10^{12}	5	50	1.07	.09	-92	1	6	500
2N146	134	NPN	1.5×10^{13}	10	50	2.02	.18	-94	7	12	70
2N146	43	NPN	2.25×10^{13}	15	50	1.22	.07	-94	11	11	0
2N169A	71	NPN	7.5×10^{12}	5	50	2.26	.15	-93	4	13	220
2N169A	78	NPN	1.5×10^{13}	10	50	2.15	.04	-98	3	20	570
2N169A	90	NPN	2.25×10^{13}	15	50	2.76	.13	-95	4	26	550
2N1302	50	NPN	7.5×10^{12}	5	100	2.72	.29	-89	13	59	350
2N1302	53	NPN	1.5×10^{13}	10	100	4.46	.14	-97	21	110	420
2N1302	36	NPN	2.25×10^{13}	15	100	2.35	.16	-93	8	83	890

*Exposure time questionable due to beam control limitations.

TABLE II. - TRANSISTORS IRRADIATED IN UNIVERSITY OF ROCHESTER 240 MEV SYNCHROCYCLOTRON

AT TOTAL PROTON FLUX OF 9.3×10^{11} PROTONS/CM^2

[Total time in beam for all transistors was 32 hours]

Transistor	Specimen number	Type	Base current, I_b, ua	Collector current, I_c, ma		Change in I_c percent	Leakage current, I_{ceo}, ua		Change in I_{ceo}, percent	Leakage current, $^*I_{co}$, ua		Change in I_{co}, percent
				Before irradiation	After irradiation		Before irradiation	After irradiation		Before irradiation	After irradiation	
2N128	1	PNP	30	1.34	1.26	-6	7	7	0	---	---	---
2N128	3	PNP	30	.60	.62	3	7	7	0	---	---	---
2N146	17	NPN	50	1.34	1.06	-21	3	3	0	---	---	---
2N146	42	NPN	50	2.04	1.24	-39	2	2	0	---	---	---
2N146	52	NPN	50	1.98	1.52	-23	3	3	0	---	---	---
2N224	175	PNP	75	7.16	2.40	-66	220	390	77	4	20	400
2N224	176	PNP	75	7.0	2.70	-61	240	300	25	5	29	480

$^*I_{co}$ of 1 microampere or less is not listed.

TABLE III.- RESISTORS AND CONDENSERS IRRADIATED WITH 22 MEV PROTONS

(a) Resistors

Number	Rated resistance value, ohms	Type	Manufacturer	Measured resistance before irradiation, ohms	Resistance after irradiation	Total flux, protons/cm^2
1	470	Carbon	Allen Bradley Co.	440	Same	1.15×10^{13}
2	470	Carbon	Allen Bradley Co.	445	Same	2.31
3	100,000	Carbon	Allen Bradley Co.	96,000	Same	1.15
4	100,000	Carbon	Allen Bradley Co.	97,300	Same	2.31
5	470	Carbon film	Texas Instruments, Inc.	460	Same	1.15
6	470	Carbon film	Texas Instruments, Inc.	462	Same	2.31
7	100,000	Carbon film	Texas Instruments, Inc.	100,000	Same	1.15
8	100,000	Carbon film	Texas Instruments, Inc.	100,000	Same	2.31

(b) Condensers

Number	Rated capacitance value	Type	Manufacturer	Measured capacitance before irradiation, μf	Capacitance after irradiation	Total flux, protons/cm^2
9	0.002 μf/1,000 v	Ceramic	Sprague Electric Co.	0.00122	Same	1.15×10^{13}
10	.002 μf/1,000 v	Ceramic	Sprague Electric Co.	.00124	Same	1.15
11	.002 μf/1,000 v	Ceramic	Sprague Electric Co.	.00133	Same	2.31
12	.002 μf/1,000 v	Ceramic	Sprague Electric Co.	.00124	Same	2.31
13	10 μf/35 v	Tantalum	Texas Instruments, Inc.	9.0	Same	1.15
14	10 μf/35 v	Tantalum	Texas Instruments, Inc.	8.5	Same	2.31
15	1 μf/35 v	Tantalum	United Industrial Corp.	.86	Same	1.15
16	1 μf/35 v	Tantalum	United Industrial Corp.	.98	Same	2.31
17	.005 μf	Ceramic	Aerovox Corp.	.0060	Same	1.15
18	.005 μf	Ceramic	Aerovox Corp.	.0056	Same	2.31
19	.001 μf	Ceramic	Aerovox Corp.	.0013	Same	1.15
20	.001 μf	Ceramic	Aerovox Corp.	.0012	Same	2.31

TABLE IV. - SOLAR-CELL DAMAGE

Proton energy, Mev	Total flux, protons/cm^2	Total time in beam	Cell number	Power reduction (at 0.35v per cell), percent	Reduction of short-circuit current, percent	Reduction of open-circuit voltage, percent	Remarks
22	1.95×10^{13}	5 min	3A 4A	70.7 76.4	63.6 68.5	24.7 23.2	No quartz windows used
			5A 6A	72.0 74.2	64.1 64.9	22.4 22.5	Quartz windows left in place while assessing damage
			5A 6A	70.5 71.7	62.7 62.0	22.2 22.1	Quartz windows removed while assessing damage
240	3.72×10^{11}	13.75 hr	2B 3B	33.3 30.0	33.3 28.3	6.0 12.5	No quartz windows used
			5B 9B	23.6 24.0	25.2 22.4	5.1 6.0	Quartz windows left in place while assessing damage
			5B 9B	23.4 24.6	25.2 22.3	5.3 6.0	Quartz windows removed while assessing damage
	5.05×10^{11}	18.33 hr	1B 10B	23.9 32.5	27.1 31.1	5.7 9.0	No quartz windows used
			4B 6B	37.3 34.5	35.4 33.1	11.6 9.3	Quartz windows left in place while assessing damage
			4B 6B	37.1 34.3	35.5 33.1	11.6 9.3	Quartz windows removed while assessing damage

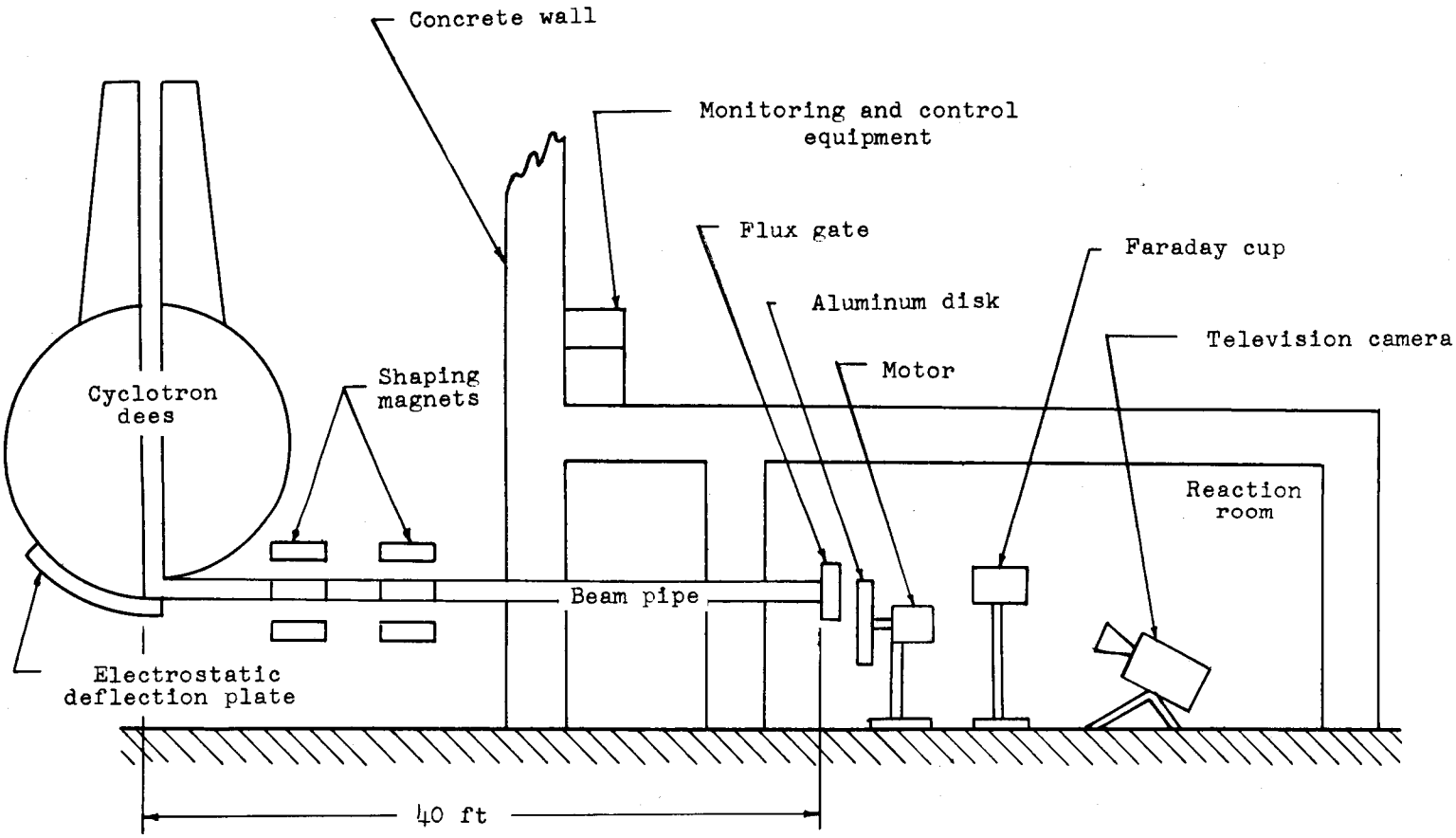

Figure 1.- Test setup in ORNL 86-inch cyclotron.

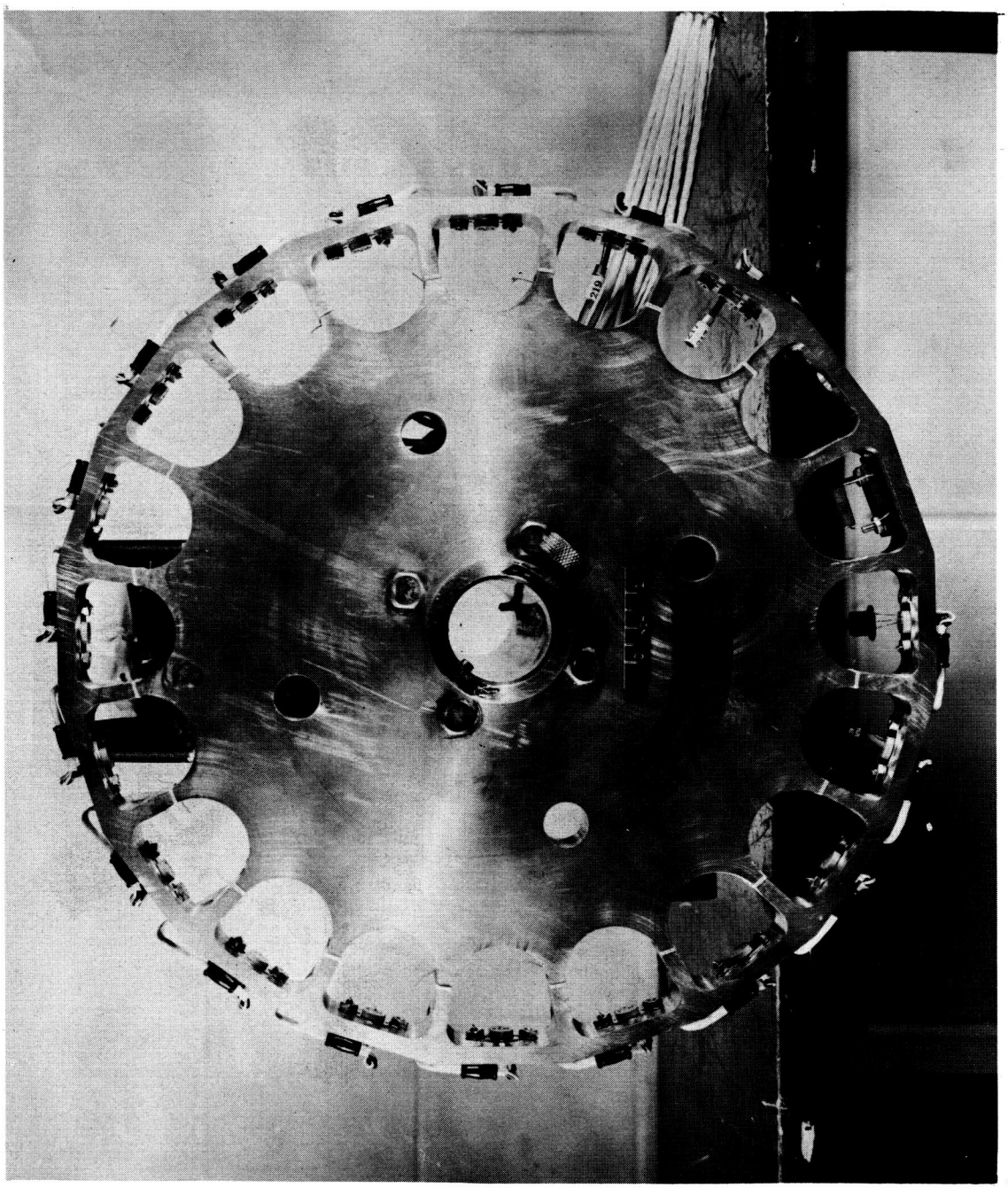

L-60-4038

Figure 2.- Disk used to hold specimens during irradiation in ORNL experiment.

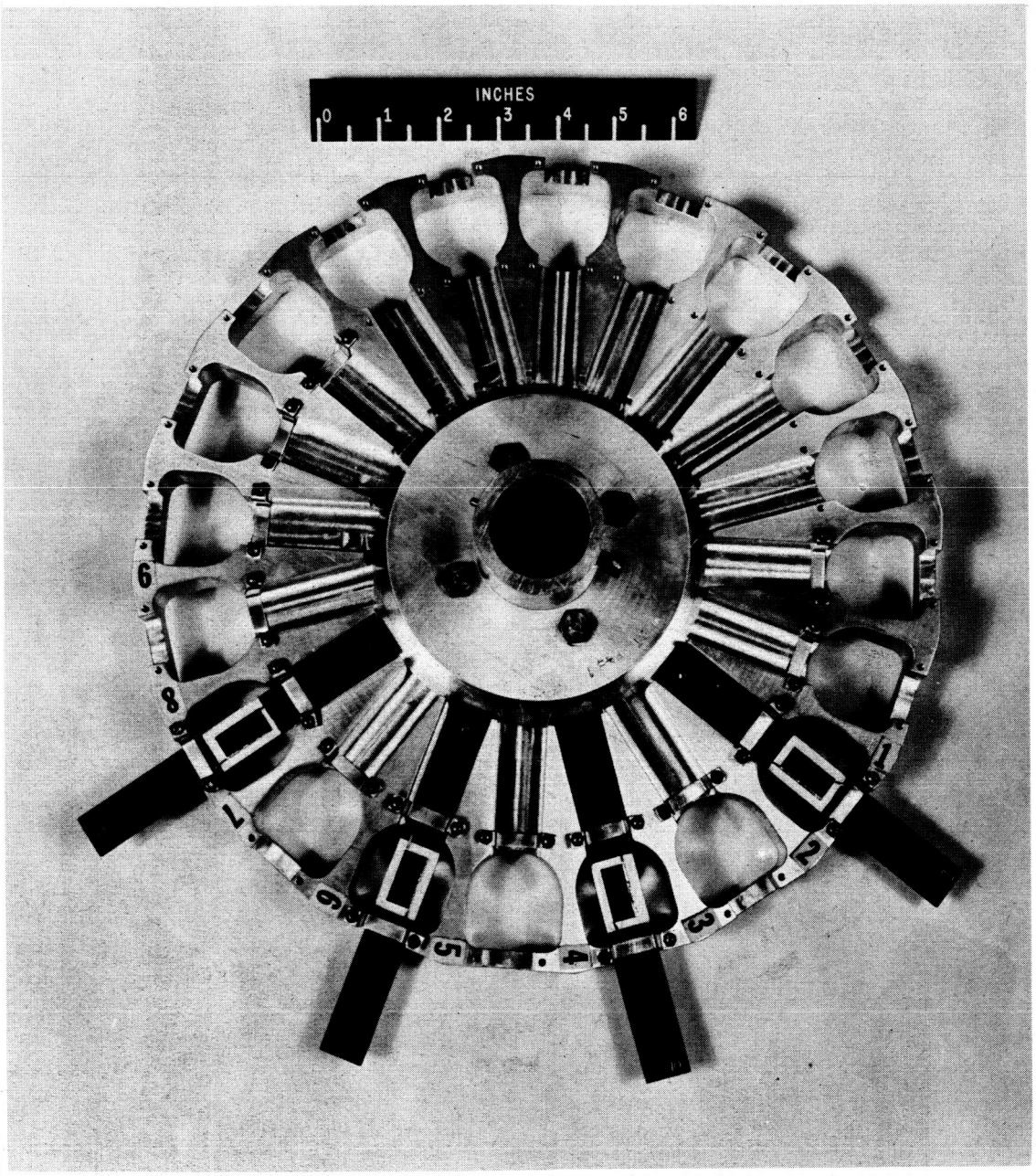

L-60-7931

Figure 3.- Disk used to support solar cells in ORNL experiment.

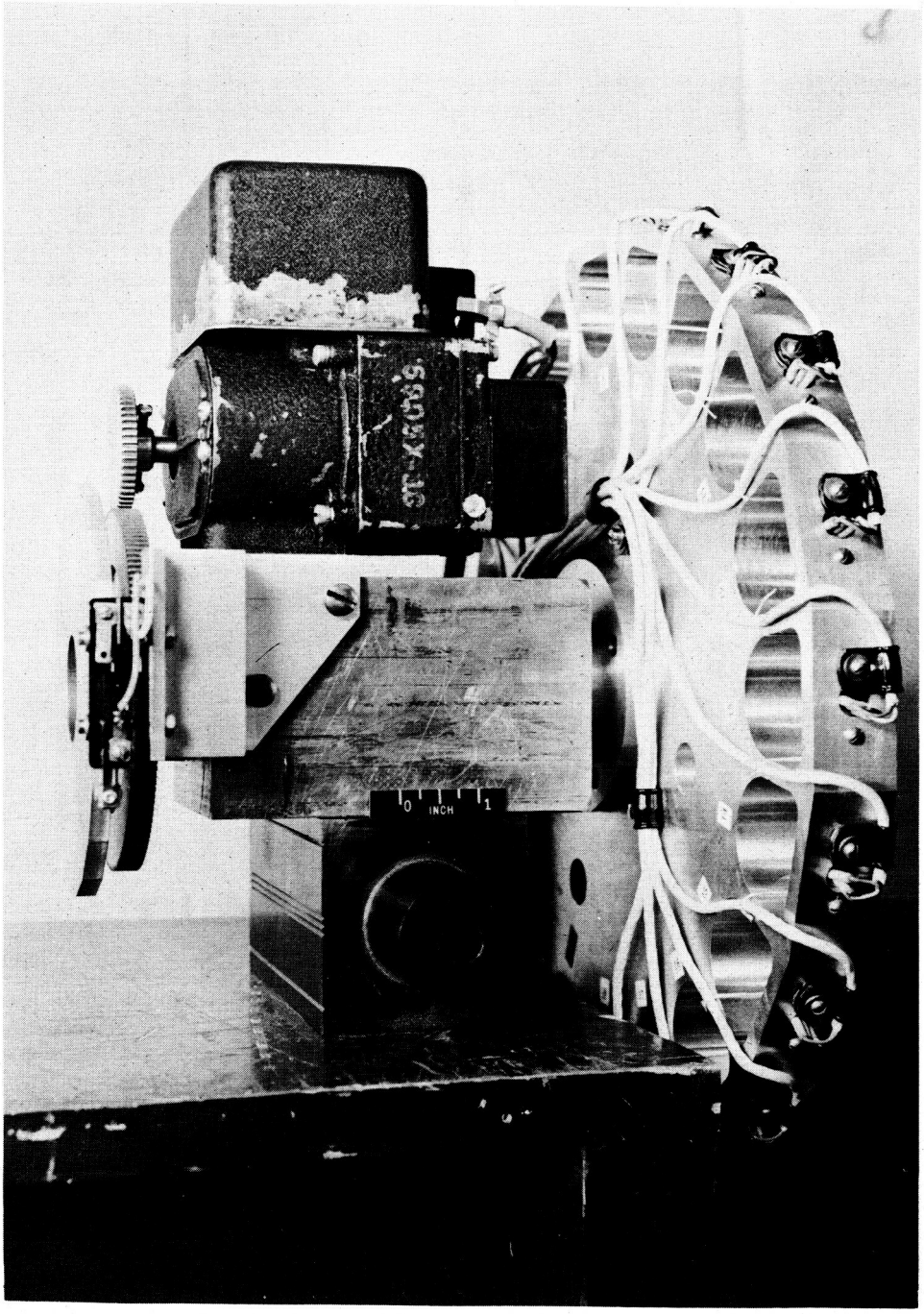

L-60-4035

Figure 4.- Mechanism used to change specimens during irradiation in ORNL experiment.

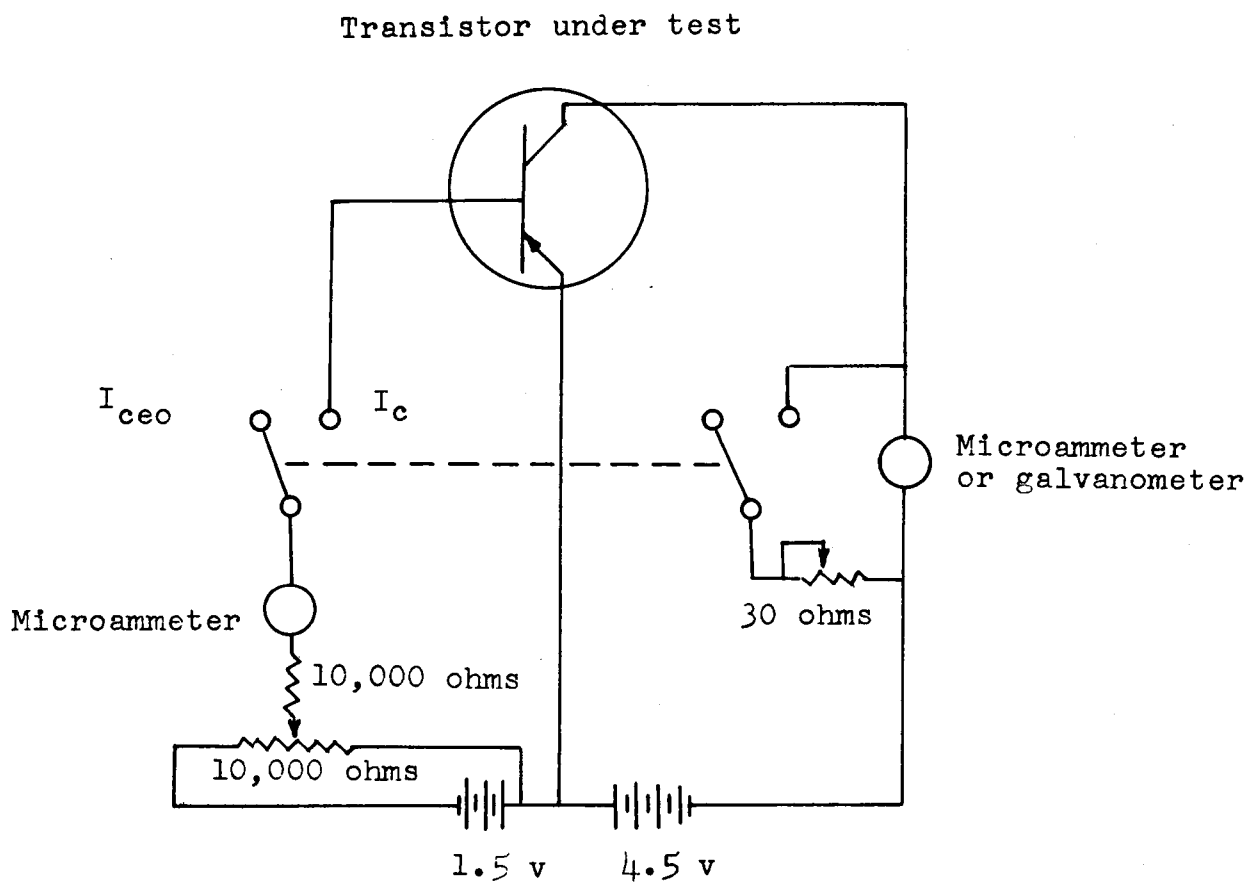

Figure 5.- Basic circuit for checking transistor leakage and collector current for ORNL experiment.

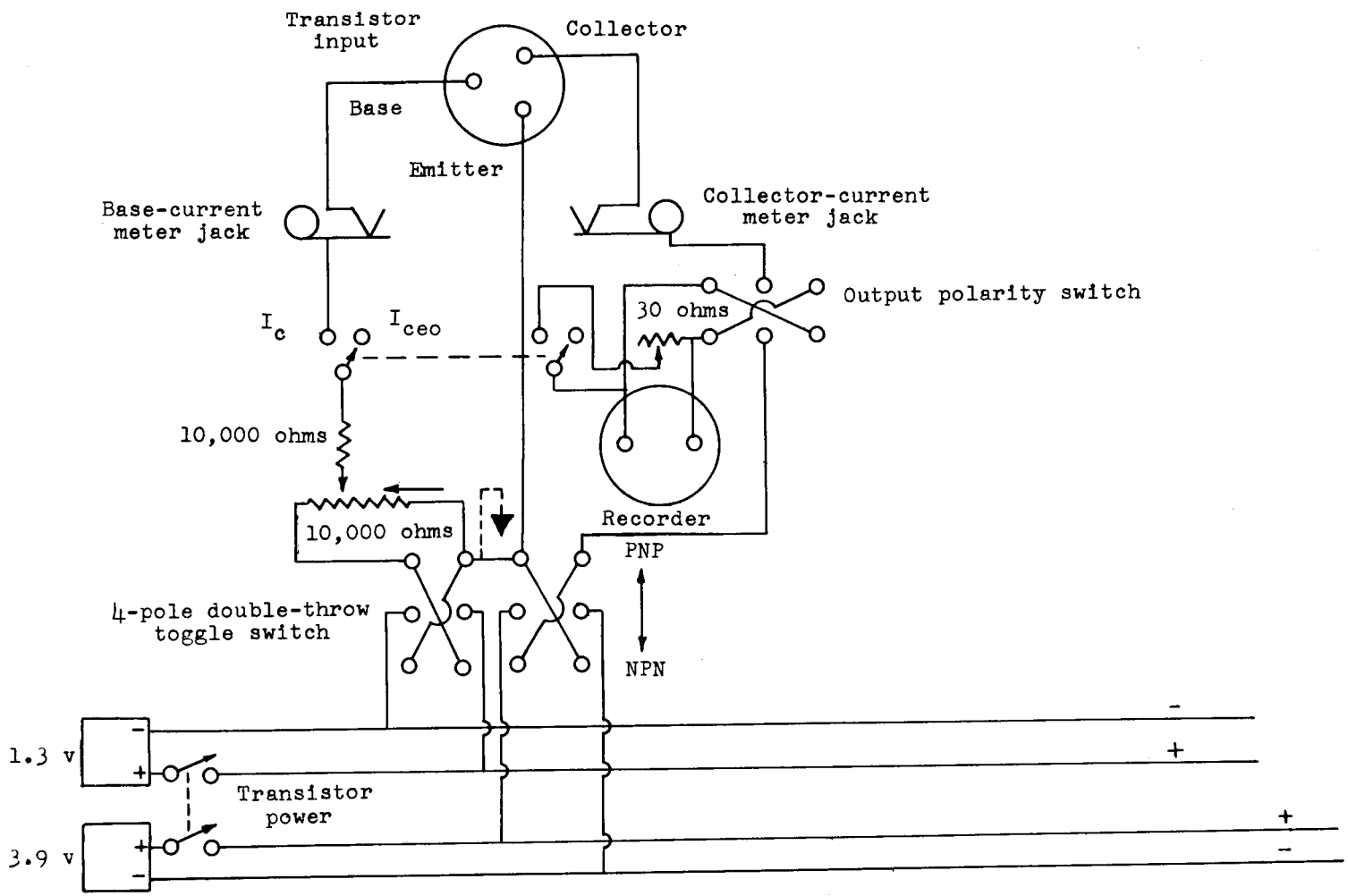

Figure 6.- Wiring diagram for transistor control unit used in ORNL irradiation experiment. Channel 1 of 20 channels.

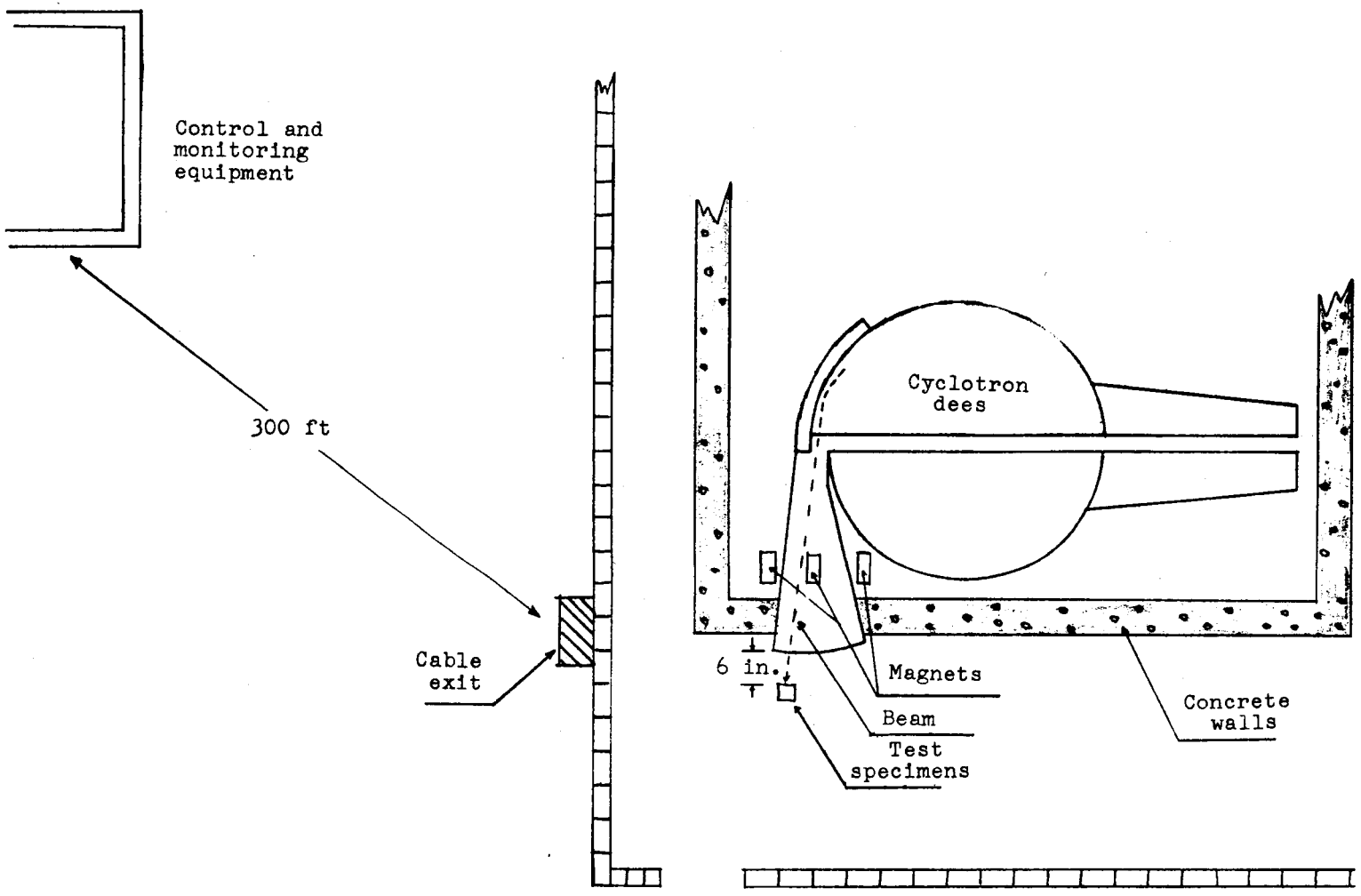

Figure 7.- Test setup in Rochester 130-inch synchrocyclotron.

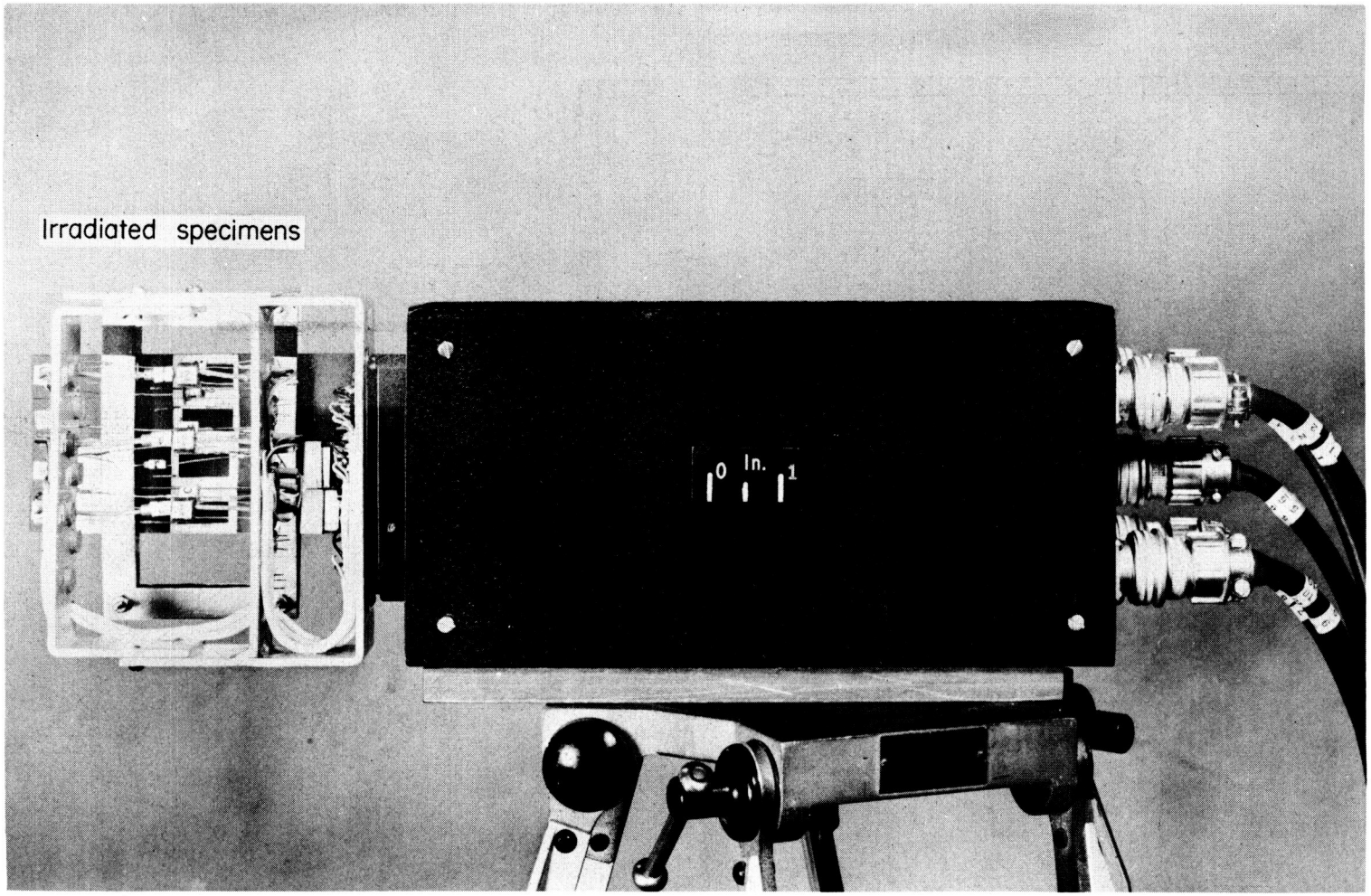

L-60-6715.1

Figure 8.- Specimen support bracket and plug-in junction unit for University of Rochester experiment.

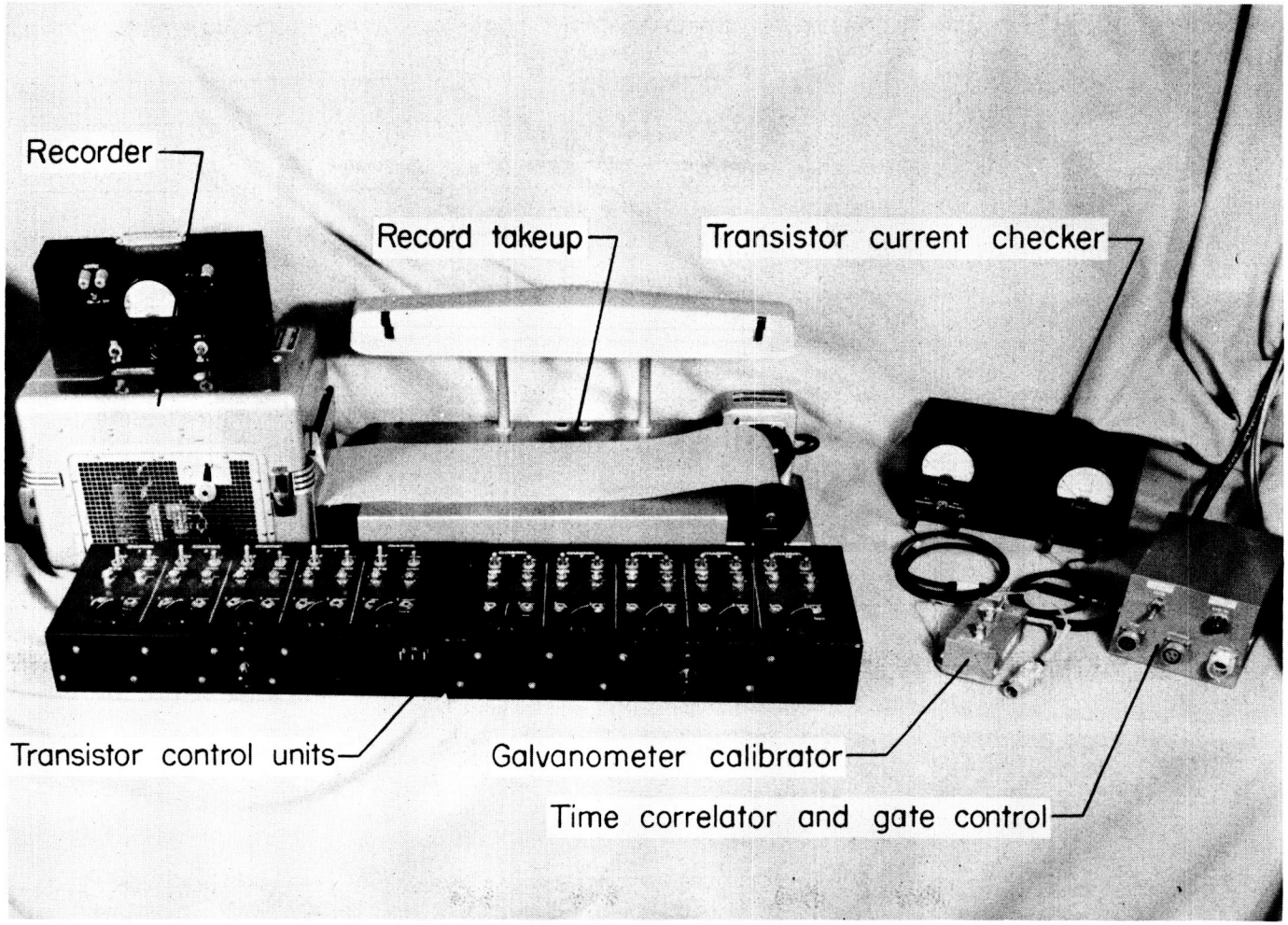

Figure 9.- Monitoring and readout instruments. L-60-6714.1

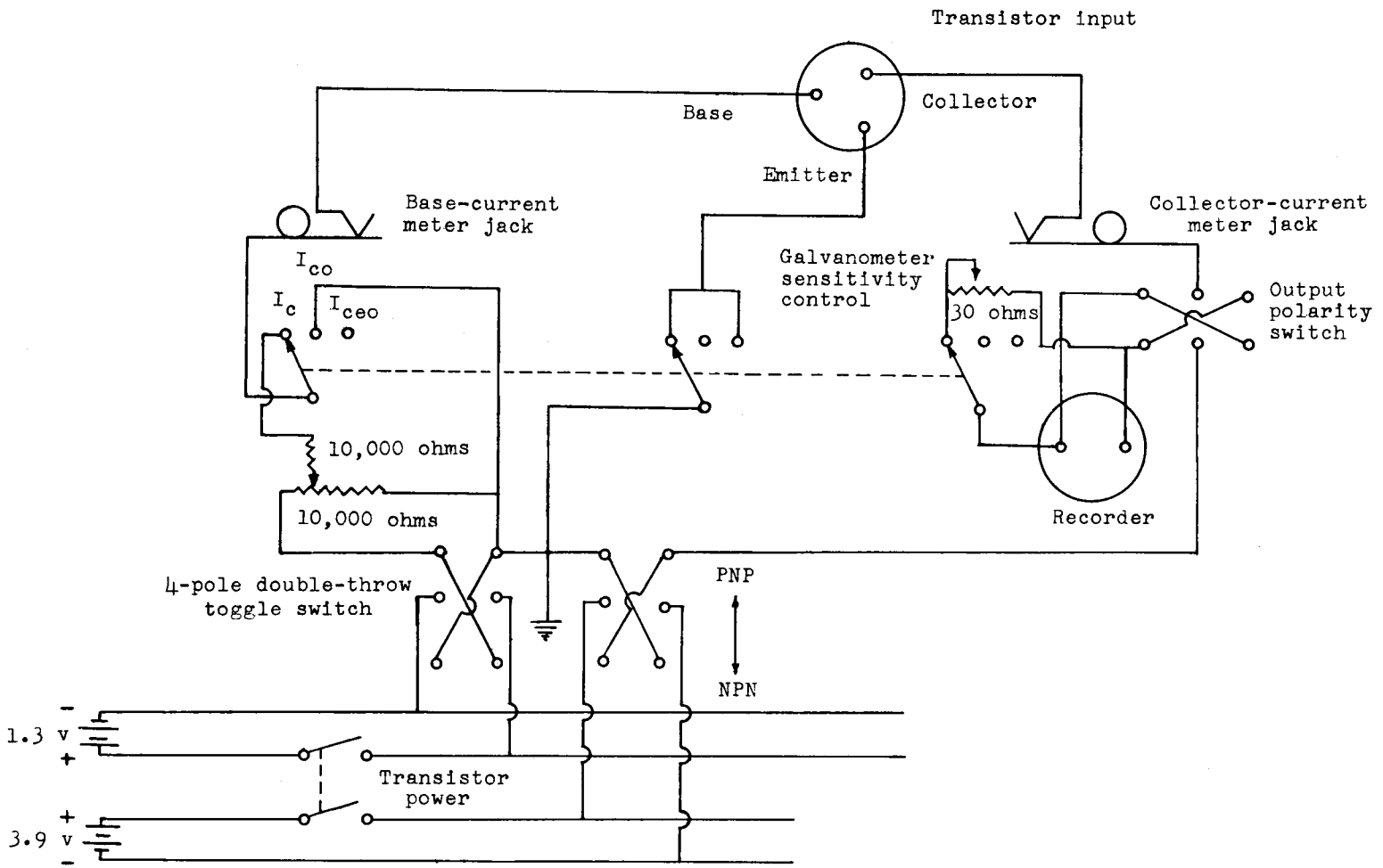

Figure 10.- Wiring diagram for transistor control unit used in University of Rochester irradiation experiment. Channel 1 of 20 channels.

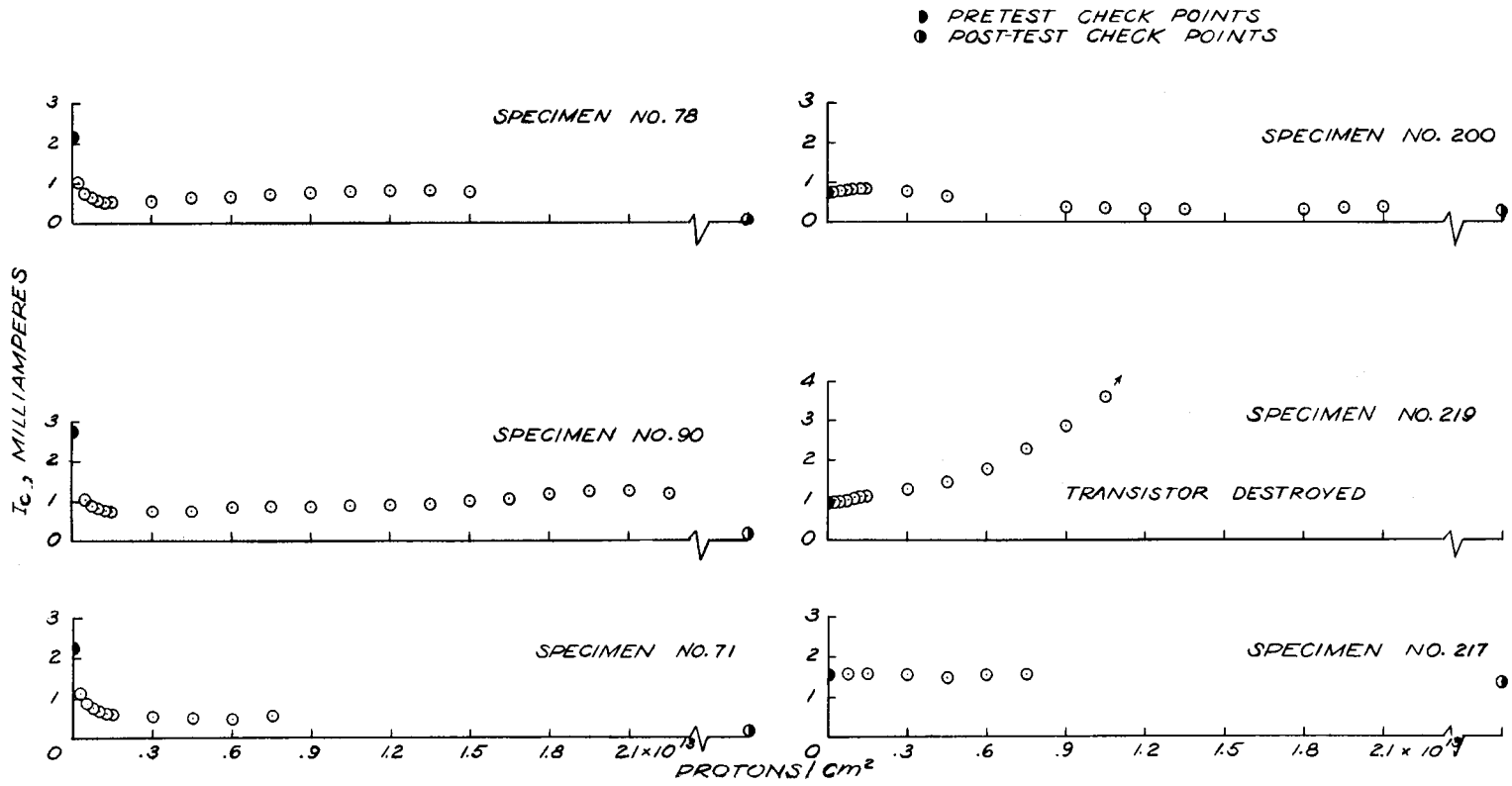

(a) 2N169A NPN; I_b = 50μa.

(b) 2N128 PNP; I_b = 20μa.

Figure 11.- Variation of I_c with integrated flux in a 22 Mev proton beam.

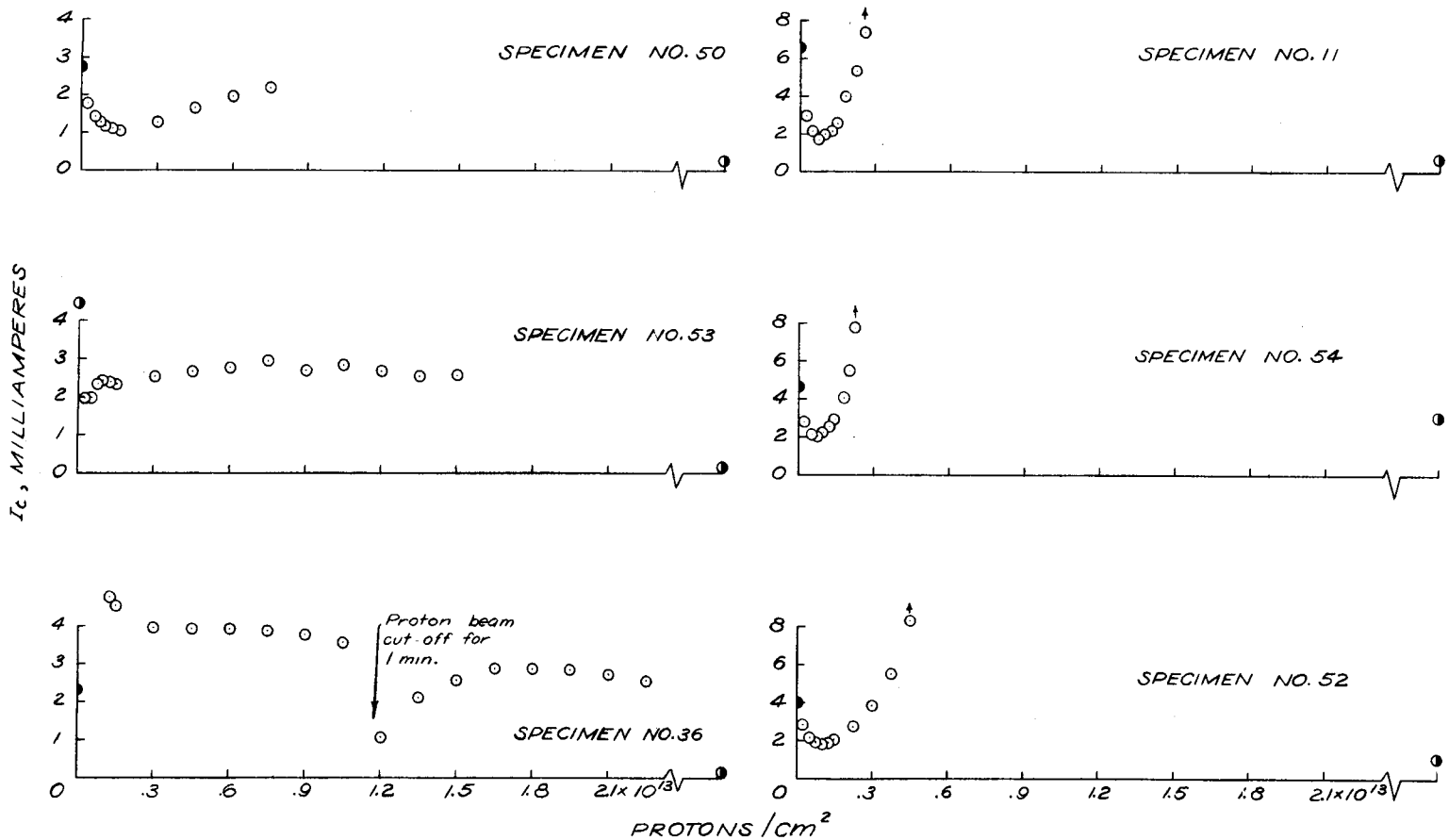

(c) 2N1302 NPN; I_b = 100μa.

(d) 2N1303 PNP; I_b = 50μa.

Figure 11.- Continued.

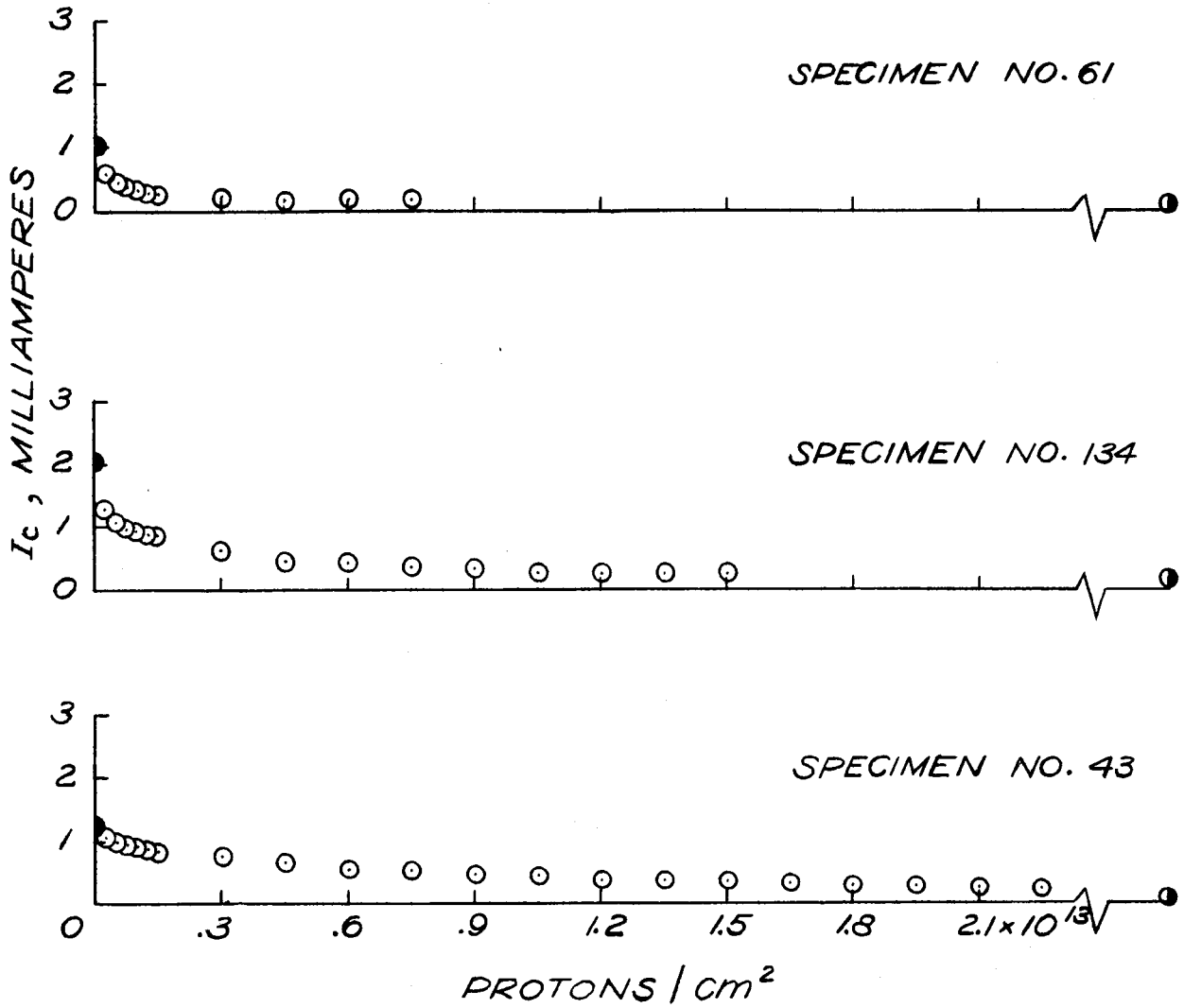

(e) 2N146 NPN; I_b = 50μa.

Figure 11.- Concluded.

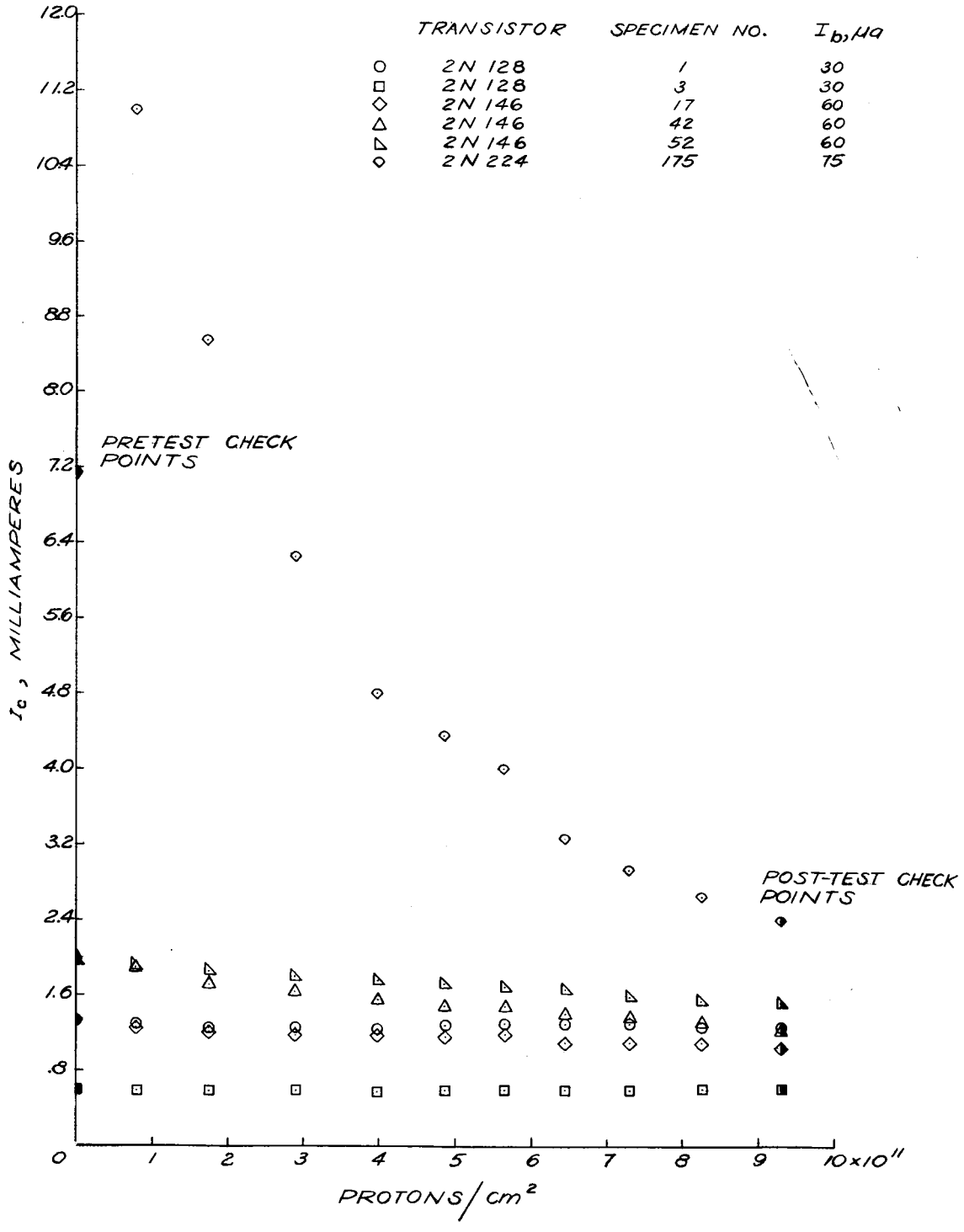

Figure 12.- Variation of I_c with integrated proton flux in a 240 Mev proton beam.

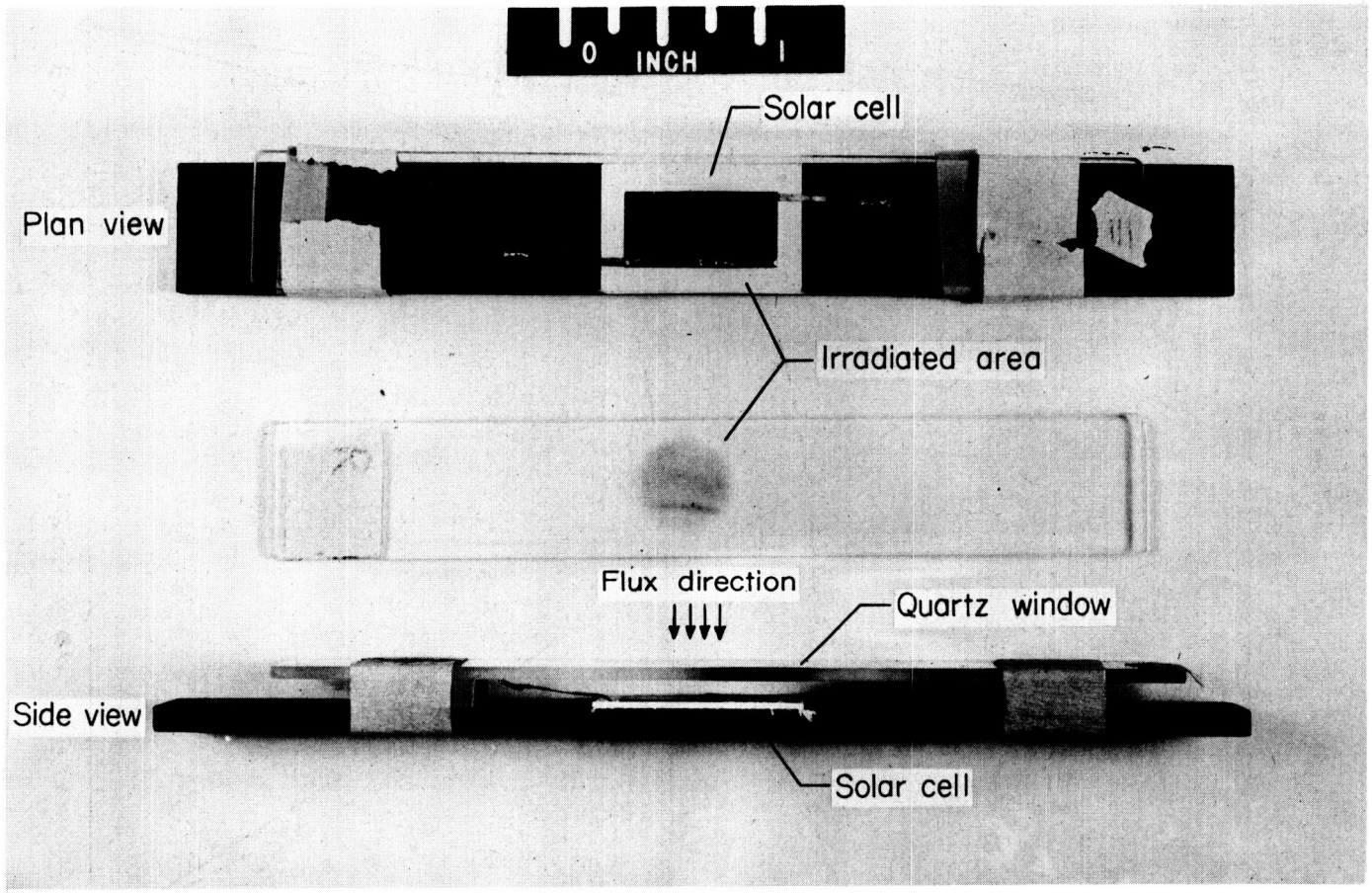

Figure 13.- Irradiated solar cell and quartz window. L-60-6068.1

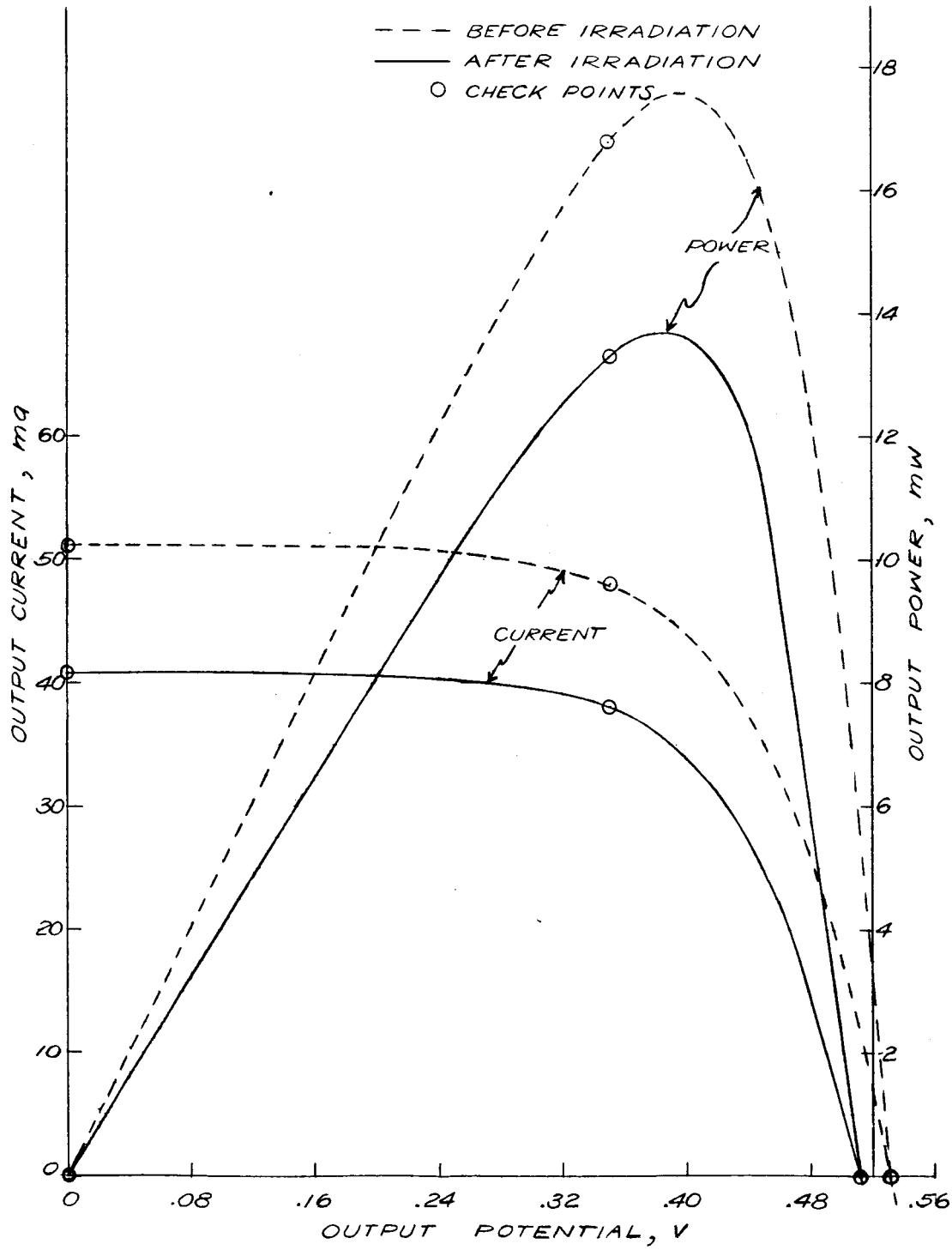

Figure 14.- Typical output curves for solar cells.

NASA - Langley Field, Va. L-1399