TECHNICAL NOTE

D-513

THRUST CHARACTERISTICS OF MULTIPLE LIFTING JETS IN GROUND PROXIMITY

By Edwin E. Davenport and Kenneth P. Spreemann

Langley Research Center
Langley Field, Va.

NATIONAL AERONAUTICS AND SPACE ADMINISTRATION

WASHINGTON September 1960

NATIONAL AERONAUTICS AND SPACE ADMINIS

TECHNICAL NOTE D-513

THRUST CHARACTERISTICS OF MULTIPLE LIFTING JETS IN GROUND PROXIMITY

By Edwin E. Davenport and Kenneth P. Spreemann

SUMMARY

An investigation has been made to determine the thrust characteristics within ground proximity of a series of models which might represent vertical take-off-and-landing (VTOL) aircraft with multiple exit jet engines exhausting vertically downward beneath a lifting surface. Variations in simulated engine configurations were provided by a series of nozzle insert plugs in which the number of jet exits, located symmetrically on a fixed circle, was varied, or the diameter of the circle was varied for a given number of jet exits. Plywood plates were used to represent lifting surfaces, and high-pressure air was used to simulate jet-engine exhaust.

The results of the investigation showed that increasing the number of exits, such that an annular jet configuration was approached, provided more favorable thrust characteristics within ground proximity than any other variation in the geometry of these multiple jets. Tests of a configuration with two nozzles approximating a fan-in-wing VTOL aircraft with fans located at different spanwise locations indicated that the augmentation in thrust within ground proximity was greater for the arrangement with the more inboard location of the nozzles.

INTRODUCTION

Considerable interest is currently being shown in VTOL aircraft which use the vertically directed thrust from turbojet engines for take-off. Some recent aircraft - some of which are still proposals and others which have actually flown (Bell X-14 and Ryan X-13) - are described in references 1, 2, and 3. One proposal which would be applicable to horizontal attitude VTOL aircraft would utilize thrust from jets mounted in the fuselage or nontilting wing. It was found in reference 4 that a simple jet, exhausting vertically below a lifting surface within ground proximity suffers large thrust losses. The above-mentioned investigation also disclosed that this adverse ground effect could be reduced by suitable ground structures such as a perforated plate raised slightly above

the ground. A flying vehicle of the type being discussed would be limited to special take-off-and-landing areas. It is also known that within ground proximity an annular jet of the type discussed in reference 5 possesses favorable thrust characteristics.

The present investigation was made in a static test room in the Langley 7- by 10-foot tunnel building to explore the possibility of reducing the above-mentioned adverse ground effect by modifications to the jet nozzle, such as providing a nozzle arrangement approaching that of an annular jet. These tests included a simple jet nozzle and a series of multiple exit nozzle plugs which could be inserted in the simple jet. Still another modification was that of providing a gap between the simulated lifting surface and the outside diameter of the nozzle. It was hoped that opening the gap and allowing air to flow in might reduce the high negative pressures below the wing thus reducing the losses in lift. Also tested were two double nozzles which would simulate a fan-in-wing configuration with different spanwise spacings. These double nozzles were tested with and without a simulated fuselage.

SYMBOLS

The positive sense of thrust used in this paper is indicated in figure 2.

A_j jet-flow area, sq in.

A_p plate area, sq in.

D_e equivalent nozzle diameter, $\sqrt{\frac{A_j 4}{\pi}}$, in.

D_p diameter of opening in plate, in.

F fuselage

g acceleration due to gravity, 32.2 ft/sec^2

h height of nozzle above ground board, in.

m mass flow, w/g, slugs/sec

p ambient pressure, lb/sq ft

p_t total pressure at nozzle exit, lb/sq ft

R gas constant, $\frac{\text{ft-lb}}{\text{lb}}\Big/{}^{\circ}\text{R}$

t plenum chamber temperature, $^{\circ}$R

T_c calculated thrust, mV_j, lb

T_m measured thrust, lb

V_j jet velocity (isentropic expansion is assumed),

$$\sqrt{\frac{2\gamma}{(\gamma - 1)}Rtg\left[1 - \left(\frac{p}{p_t}\right)^{\frac{\gamma-1}{\gamma}}\right]}, \text{ ft/sec}$$

w weight flow, lb/sec

γ ratio of specific heats for air, 1.4

APPARATUS AND METHODS

A photograph of one of the model configurations and plenum chamber mounted on a strain-gage balance is shown as figure 1. A sketch of the basic model and the plywood ground-board details is shown in figure 2(a). Details of the basic 4-inch-diameter nozzle are also given in this figure. Shown in figure 2(b) are the five multiple nozzles which were made as wooden plugs to fit in the exit of the basic 4-inch nozzle. The geometry of the lifting-surface plates is given in figure 2(c).

Details of the double nozzles which could be considered to represent a fan-in-wing concept are shown in figure 3. A rectangular steel plenum was provided to accommodate directly the smaller sized plate (plate 6) and double nozzle. This plenum is not shown. Dimensions of the balsa wood fuselage used with the double nozzles are also shown in this figure.

Compressed air used to simulate jet-engine exhaust was supplied to the plenum chamber through two flexible hoses connected to a tee fitting so that any pressure effects due to the hoses were at right angles to the thrust axis. The mass flow was determined by means of a standard sharp-edge-orifice flow meter. The mass flow for nozzles 1, 5, and 6 was held constant at about 0.07 slug per second; for nozzles 2, 3, and 4, 0.04 slug per second; and for the double nozzles, about 0.06 slug per second. Stagnation temperatures and pressures, measured in the plenum for the most part varied between 60° to 70° and 16 to 22 pounds per square inch, respectively. Temperatures were measured with the aid of a thermocouple and pressures, with the use of a total-pressure tube and a

manometer board. Exit velocities computed on the basis of isentropic expansion remained subsonic.

The investigation was conducted in a static thrust facility in the Langley 7- by 10-foot tunnels.

RESULTS AND DISCUSSION

The results of the investigation which are shown as plots of the ratio of T_m/T_c against h/D_e are presented in figures 4 to 8. It should be noted that the values of D_e in the ratio of h/D_e are the equivalent diameters as defined in the section "Symbols."

Effect of Plate Modification

It was found from tuft studies in reference 4 that, within ground proximity, a radial outflow across the ground under the plate simulating the lifting surface tended to pump air from beneath the plate; this reduced the pressure and caused an induced download. In an attempt to partially balance the adverse pressures and reduce the negative thrust, a series of gaps, varying from 0 to 20.3 percent of the nozzle diameter, were left between the nozzle (basic nozzle 1) and plate (fig. 4). For comparison the results obtained with the plate off, plate on, and zero gap are included in the figure. The thrust losses with plate off are in line with previous experience and amount to about 2 percent of the basic thrust. Adding the plate increased the losses to about 5 percent out of the ground-effect region and to a much greater extent in the ground-effect region. Opening a gap between the plate and the nozzle had about the same effect upon thrust losses within ground effect as it did out of ground effect. Within the range of gaps investigated, this effect was of little significance.

Multiple Nozzle Modifications

Since it was known that the thrust characteristics of an annular jet within ground proximity are favorable, a logical nozzle modification would be one which produced a multiple nozzle approaching an annular jet. The investigation of this possibility was made by using nozzles 2, 5, and 6, details of which are shown in figure 2(b), and by comparing the results directly with those obtained with nozzle 1, the simple jet. Increasing the number of jet exits which were located symmetrically on a circle of fixed circumference so as to approach effectively the geometry of an annular jet provided some of the advantages of an annular jet, that is, a

reduction in the adverse ground effects. A ratio of jet-exit area to lifting-surface-plate area of 5 percent was necessary to obtain this trend. These results are shown in figure 5. It was noted in the section "Apparatus and Methods" that the mass flow was not constant for all the nozzles compared in figure 5. It can be seen from the data presented in reference 4 that there is some effect upon thrust performance with variation in mass flow. Had the mass flow for nozzle 2 been consistent with that of nozzles 1, 5, and 6, its performance would probably have been improved over what is shown. Another consideration which was not investigated would have kept the jet-exit area constant while varying the number of exits. Further experimentation would be necessary before it would be wise to speculate as to the results which would be expected from this arrangement. A second variation in nozzle geometry which was investigated, that of keeping the ratio of jet area to plate area constant but decreasing the diameter of the circle on which the same number of jets were located, did not result in an improvement in thrust characteristics. (See fig. 6.)

Double Nozzles

The double nozzles, which might represent an aircraft with twin lifting jets or a heavily loaded fan in either wing, produced favorable thrust characteristics within ground proximity under certain conditions. With a simulated fuselage installed so as to represent a high-wing configuration, favorable ground effects were obtained at low heights (fig. 7). Without the fuselage, varying degrees of losses in thrust were experienced, depending on the ratio of jet area to plate area A_j/A_p; a reduction in A_j/A_p produced greater losses. Moving the nozzles spanwise away from the fuselage (fig. 8) reduced or eliminated the favorable effects, again depending upon A_j/A_p. Only at $A_j/A_p = 0.26$ were the effects favorable close to the ground.

Visual observation of the jet flow from the double nozzle close to the sides of the fuselage, made with the aid of a tuft wand, showed the presence of a flow reversal between the ground board and fuselage. The reasons for the reversal in the curve of T_m/T_c against h/D_e for this configuration at $h/D_e \approx 1$ in figure 7 may partially be given by this tuft study. The tuft pattern depicted in the following sketch shows that the flow streamlines in a plane joining the nozzles were meeting beneath the fuselage and were being deflected up against the bottom of the fuselage so as to produce a lift force.

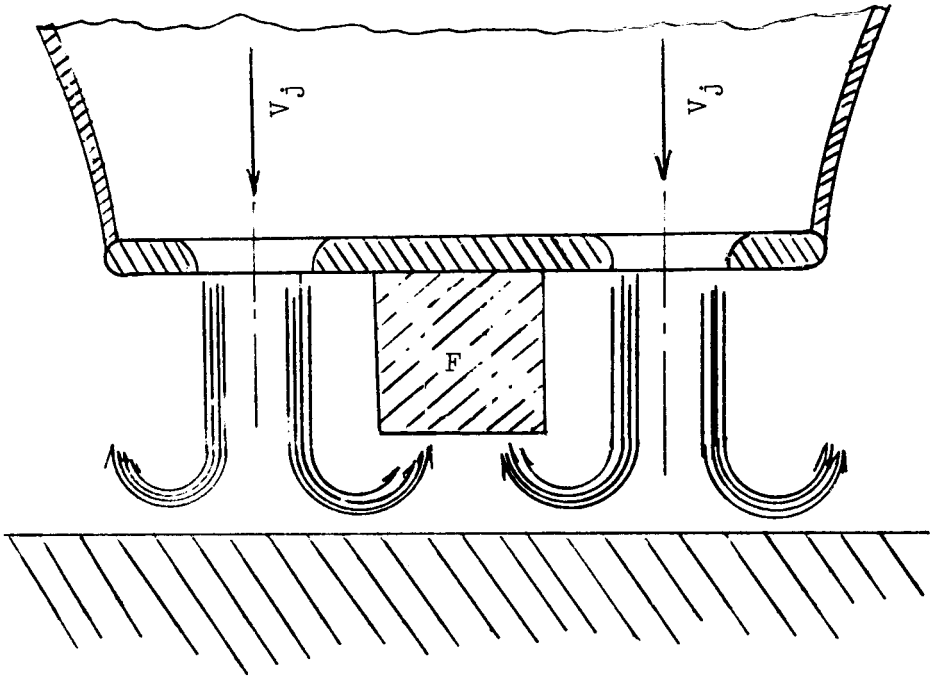

Both ahead of and behind this plane the flow was deflected up at the bottom of the fuselage at a shallow angle or parallel to it as shown in the next sketch.

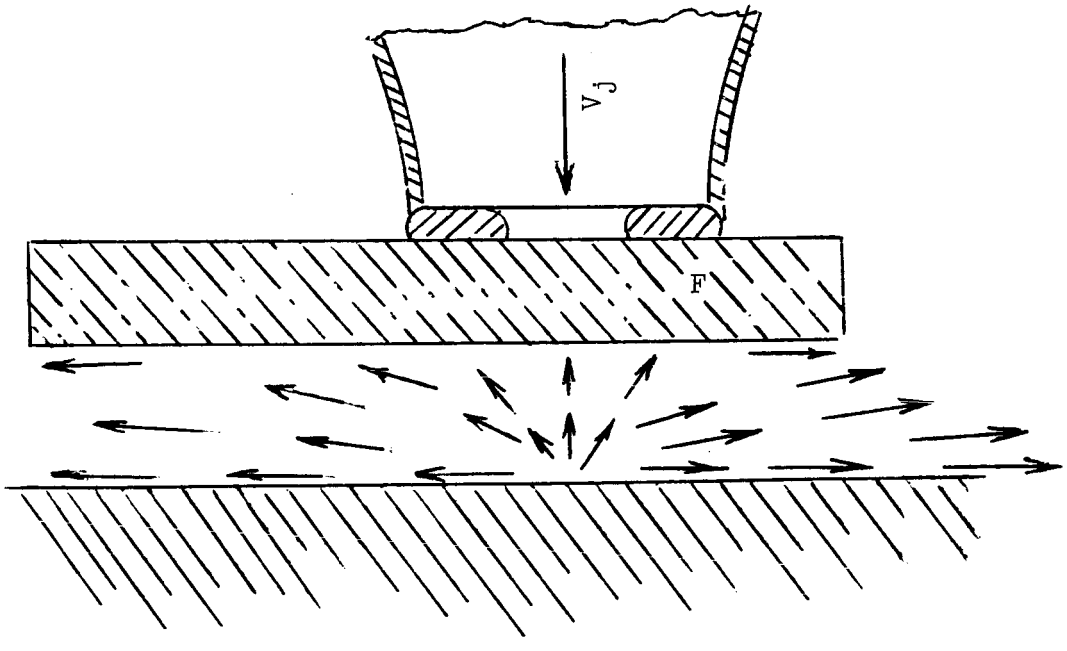

This parallel flow, ahead of and behind the wing or lifting-surface plate, induced a down load. The relative strength of these favorable and unfavorable effects apparently vary with height to produce the erratic variation in the values of T_m/T_c shown in figure 7.

SUMMARY OF RESULTS

The investigation of the thrust characteristics of multiple nozzles exhausting beneath lifting surfaces within ground proximity has indicated the following results.

1. Creation of a gap between a single nozzle and lifting surface was ineffective in reducing thrust losses.

2. Variation in multiple exit nozzle geometry to approach an annular jet did provide a favorable trend in the thrust characteristics. A ratio of jet-exit area to lifting-surface-plate area of 5 percent was necessary to obtain this trend.

3. Increasing the spanwise jet spacing for a combination of a double nozzle, fuselage, and lifting surface while holding the ratio of jet-exit area to lifting-surface area constant reduced the favorable ground effect upon thrust.

4. Erratic variations in thrust were experienced by the combination of a double nozzle, fuselage, and lifting surface with the smaller spanwise spacing of nozzles.

Langley Research Center,
National Aeronautics and Space Administration,
Langley Field, Va., June 20, 1960.

REFERENCES

1. Campbell, John P.: Research on VTOL and STOL Aircraft in the United States. Advances in Aero. Sci., vol. 2, Pergamon Press (New York), 1959, pp. 845-892.

2. O'Malley, James A., Jr., and Landphair, Lee C.: The X-14 VTOL Airplane - A Design Tool. Preprint 95B, SAE National Aeronautic Meeting (Los Angeles, Calif.), Sept. 29 - Oct. 4, 1958.

3. Saari, Martin J.: Powerplant Design Considerations for VTOL Jet Transports. Preprint No. 853, Inst. Aero. Sci., Oct. 1958.

4. Spreemann, Kenneth P., and Sherman, Irving R.: Effects of Ground Proximity on the Thrust of a Simple Downward-Directed Jet Beneath a Flat Surface. NACA TN 4407, 1958.

5. Von Glahn, Uwe H.: Exploratory Study of Ground Proximity Effects on Thrust of Annular and Circular Nozzles. NACA TN 3982, 1957.

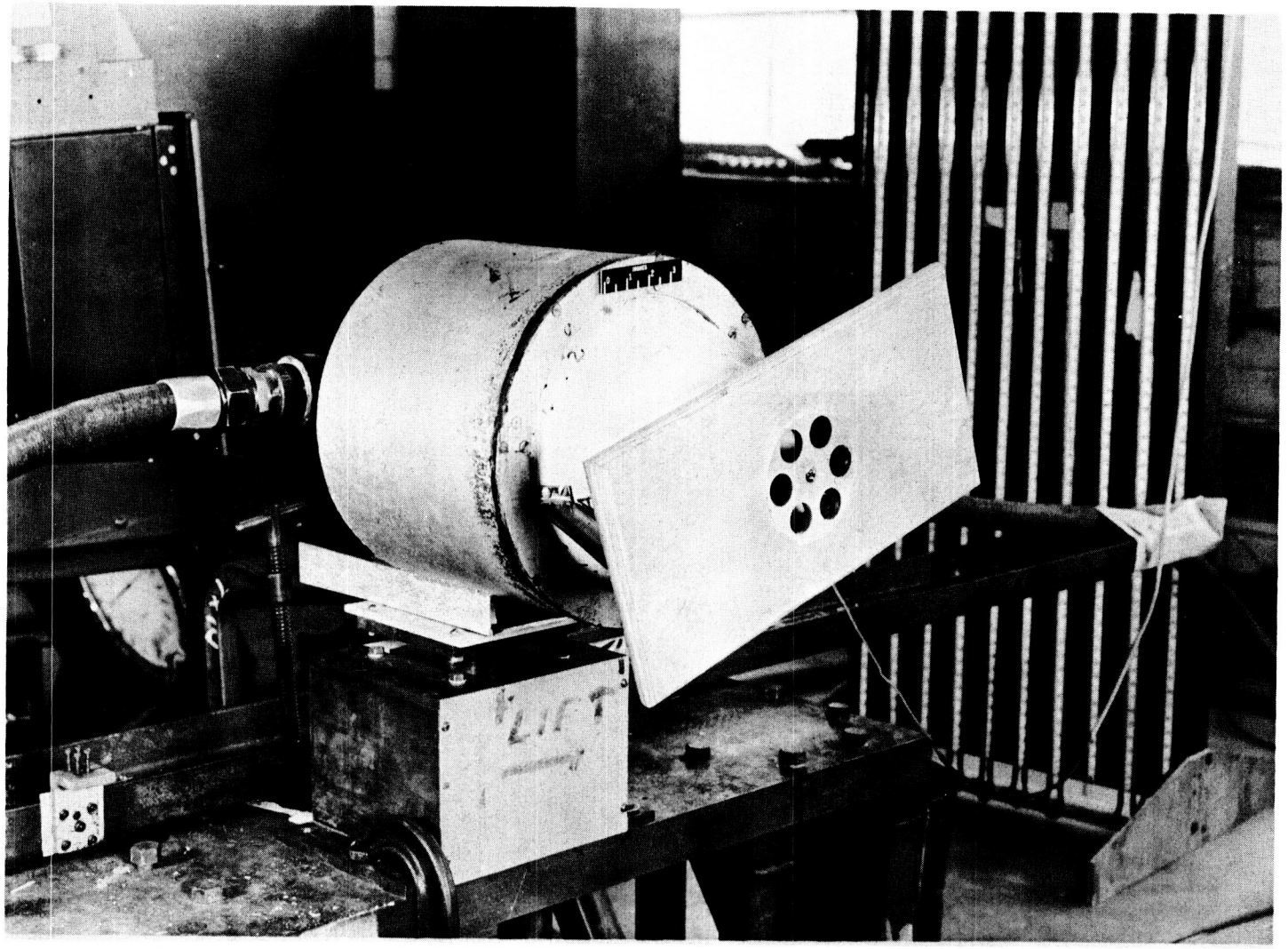

L-59-2444

Figure 1.- Typical test setup with nozzle and lifting-surface plate.

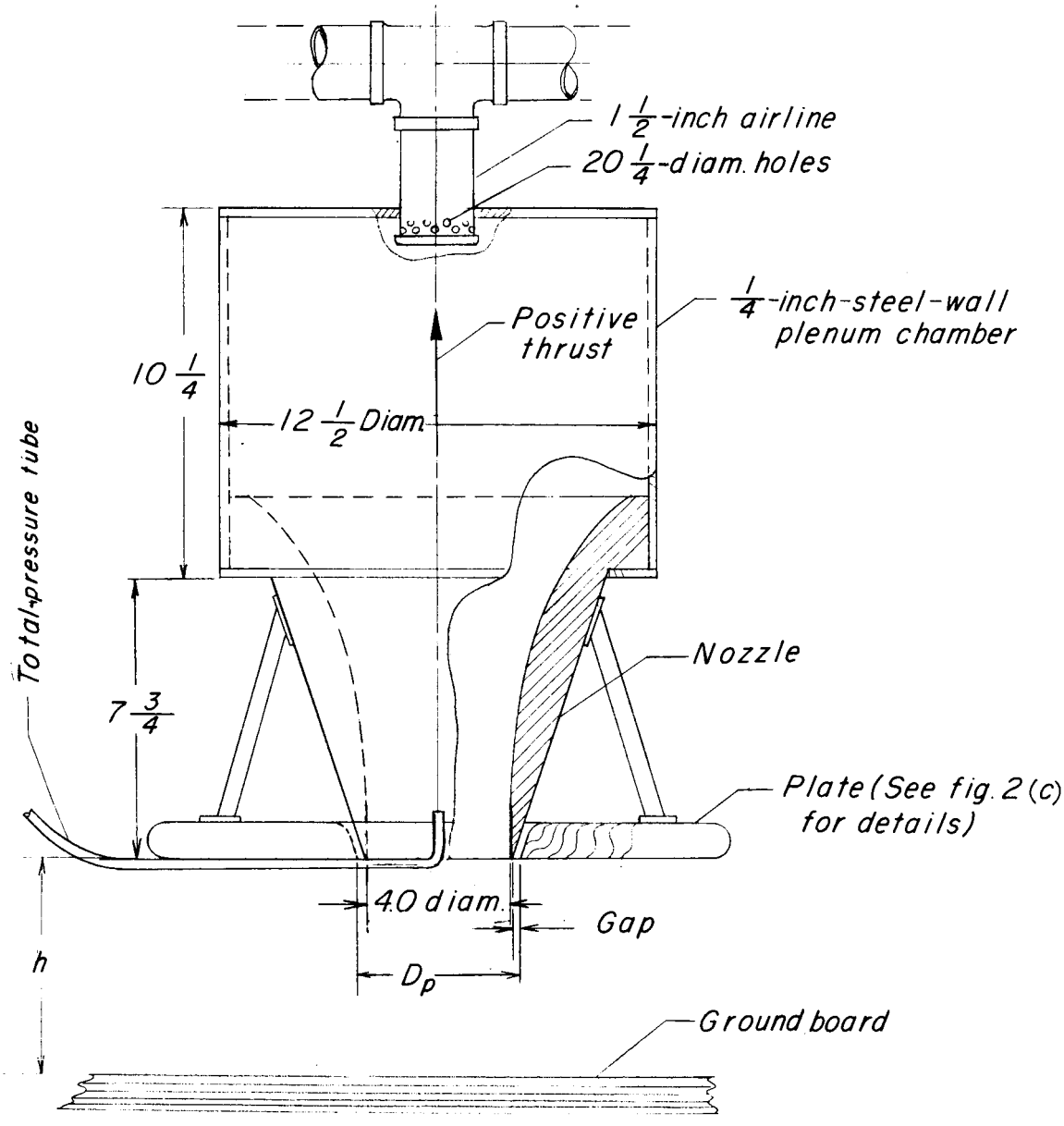

(a) Plenum and nozzle 1 with ground board.

Figure 2.- Model details. All dimensions are in inches except as noted.

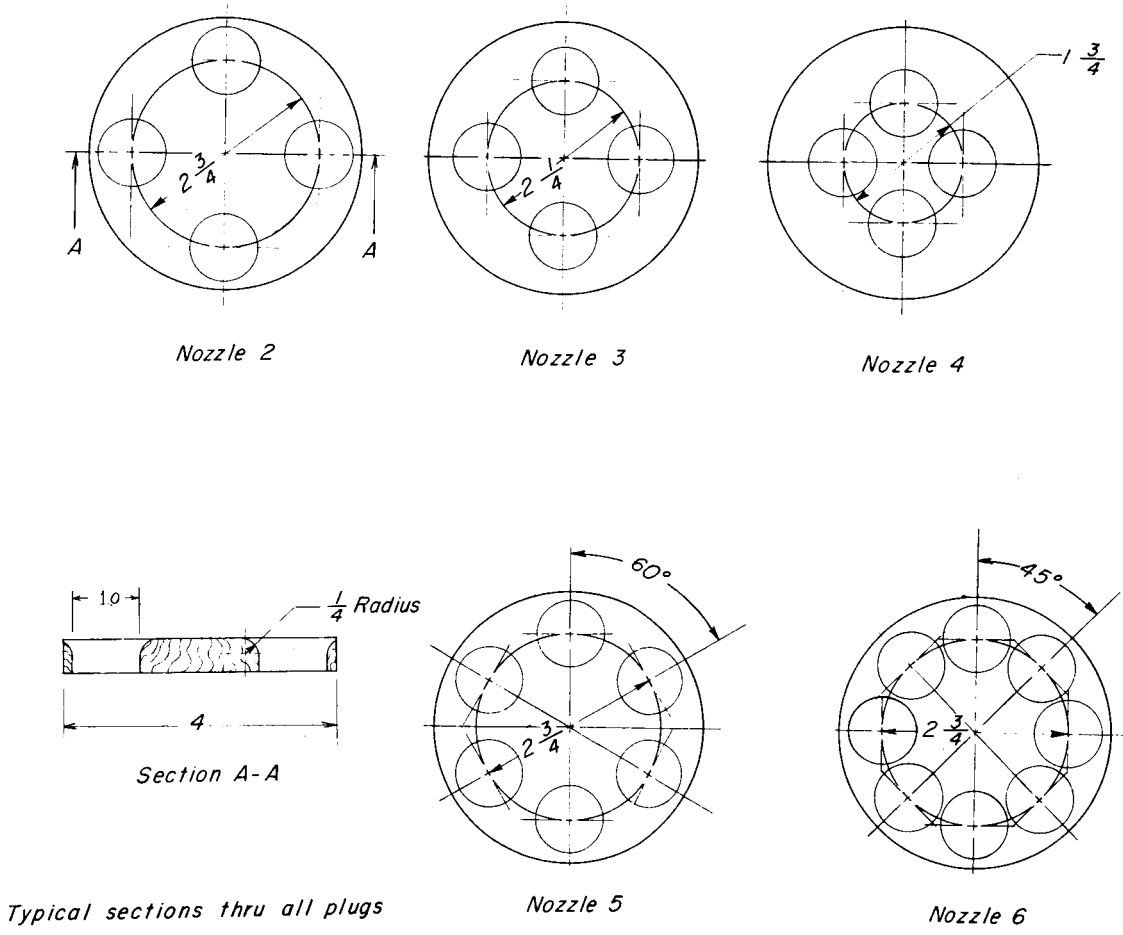

(b) Nozzle insert details.

Figure 2.- Continued.

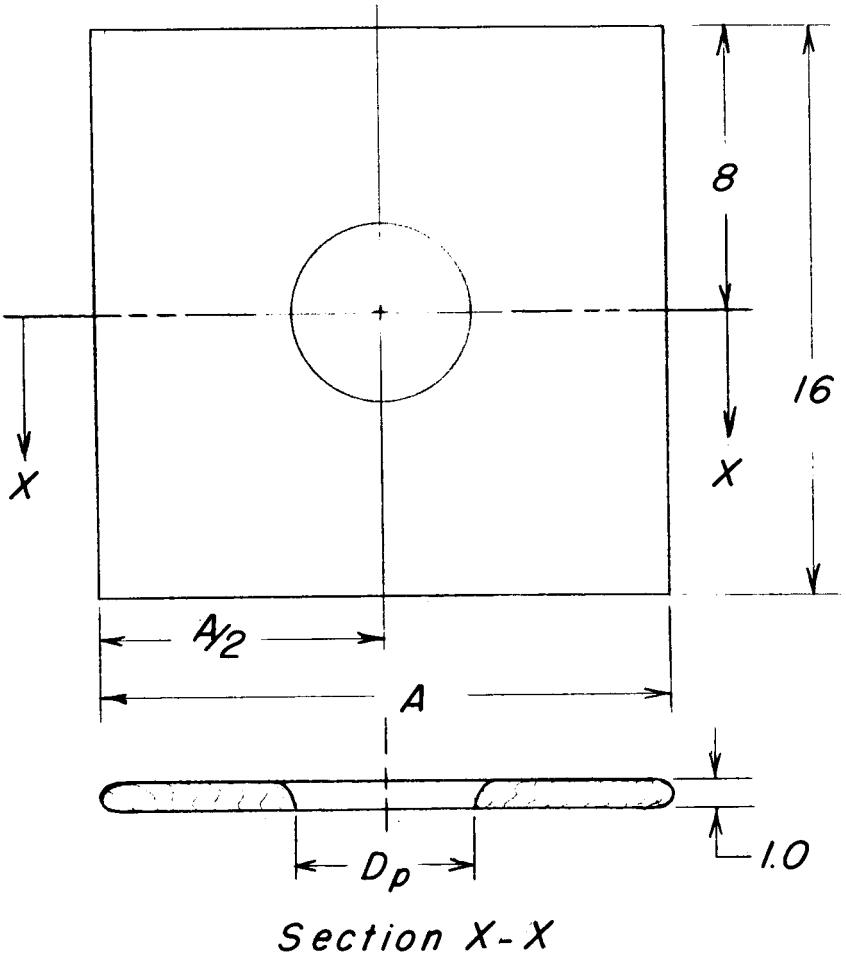

Plate	A	D_p
1	16	4.125
2	↓	4.590
3		5.000
4		5.750
5	8	4.125

(c) Plate details.

Figure 2.- Concluded.

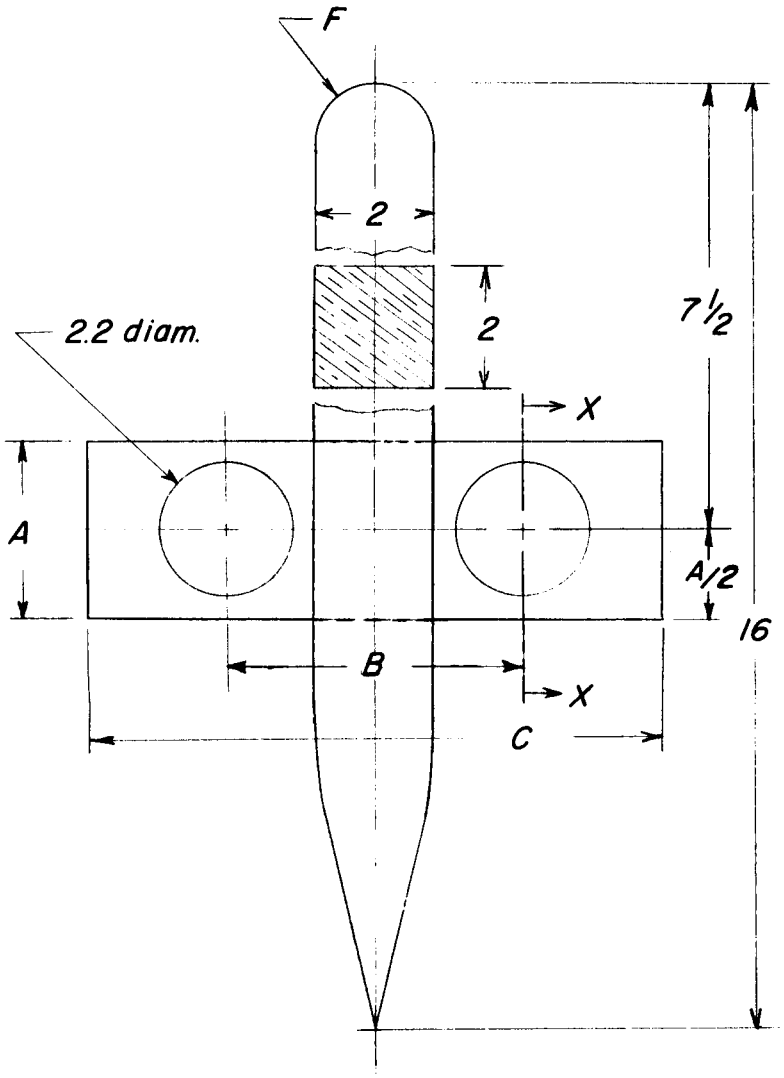

A	B	C	Plate
3.00	5.00	9.75	6
3.00	7.00	9.75	6
5.06	5.00	15.00	7
5.06	7.00	15.00	7
7.14	5.00	21.30	8
7.14	7.00	21.30	8

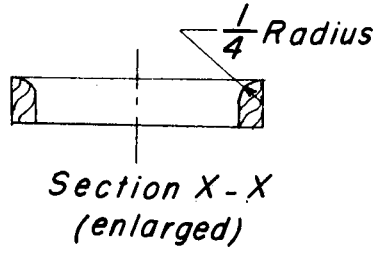

Figure 3.- Double nozzle details. All dimensions are in inches.

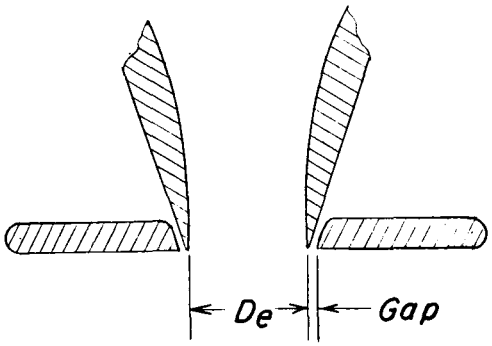

	Plate	Gap/D_e
○	None	——
□	1	0
◇	2	0.058
△	3	0.109
◿	4	0.203

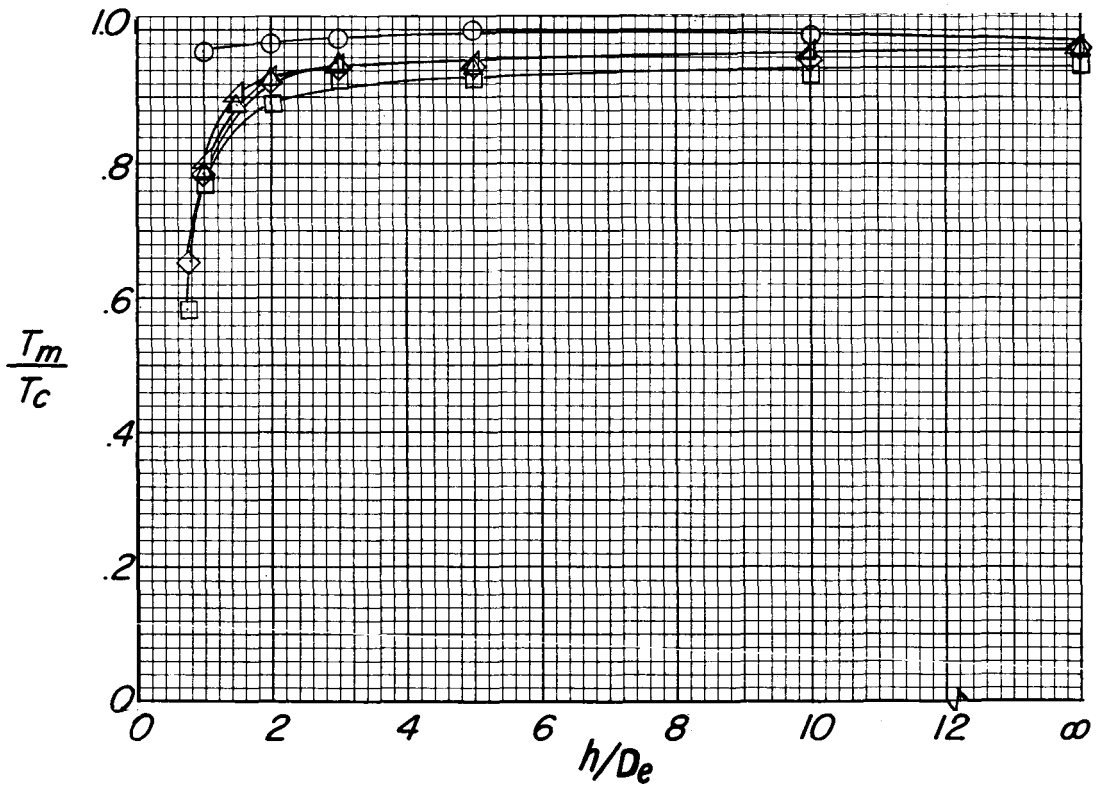

Figure 4.- Effect of plate-opening diameter on thrust characteristics of a simple jet nozzle. Nozzle 1.

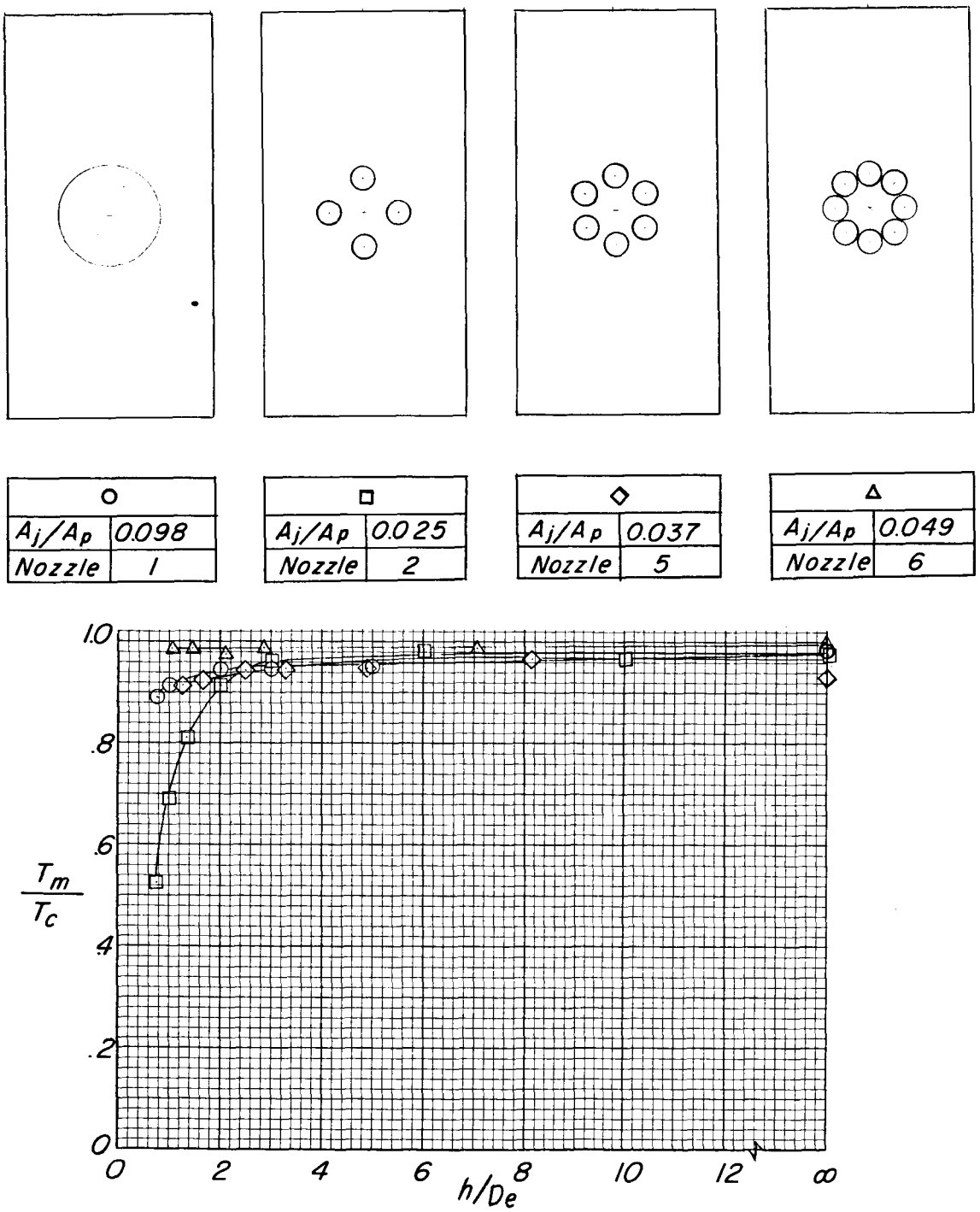

Figure 5.- Effect of nozzle geometry on thrust characteristics of multiple nozzles exhausting beneath plate 5.

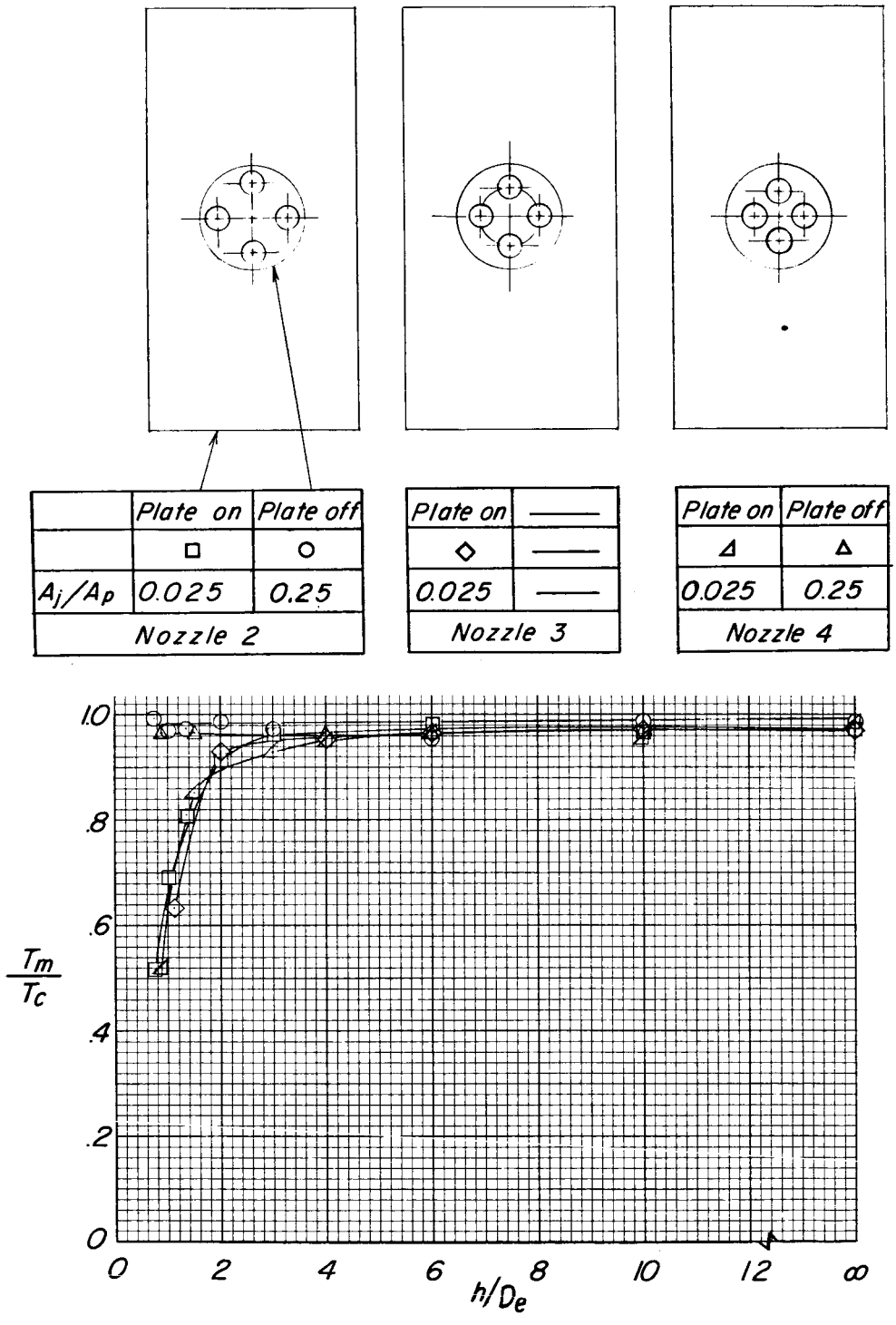

Figure 6.- Effect of nozzle geometry on thrust characteristics of a 4-holed multiple nozzle with and without a lifting surface. Plate 5.

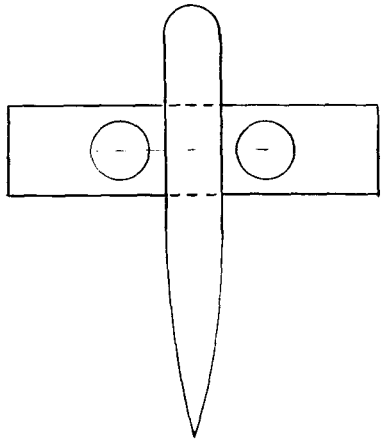

	F	Plate	A_j/A_p
○	Off	6	0.26
□	Off	7	0.10
◇	Off	8	0.05
△	On	6	0.26
◭	On	7	0.10
◬	On	8	0.05

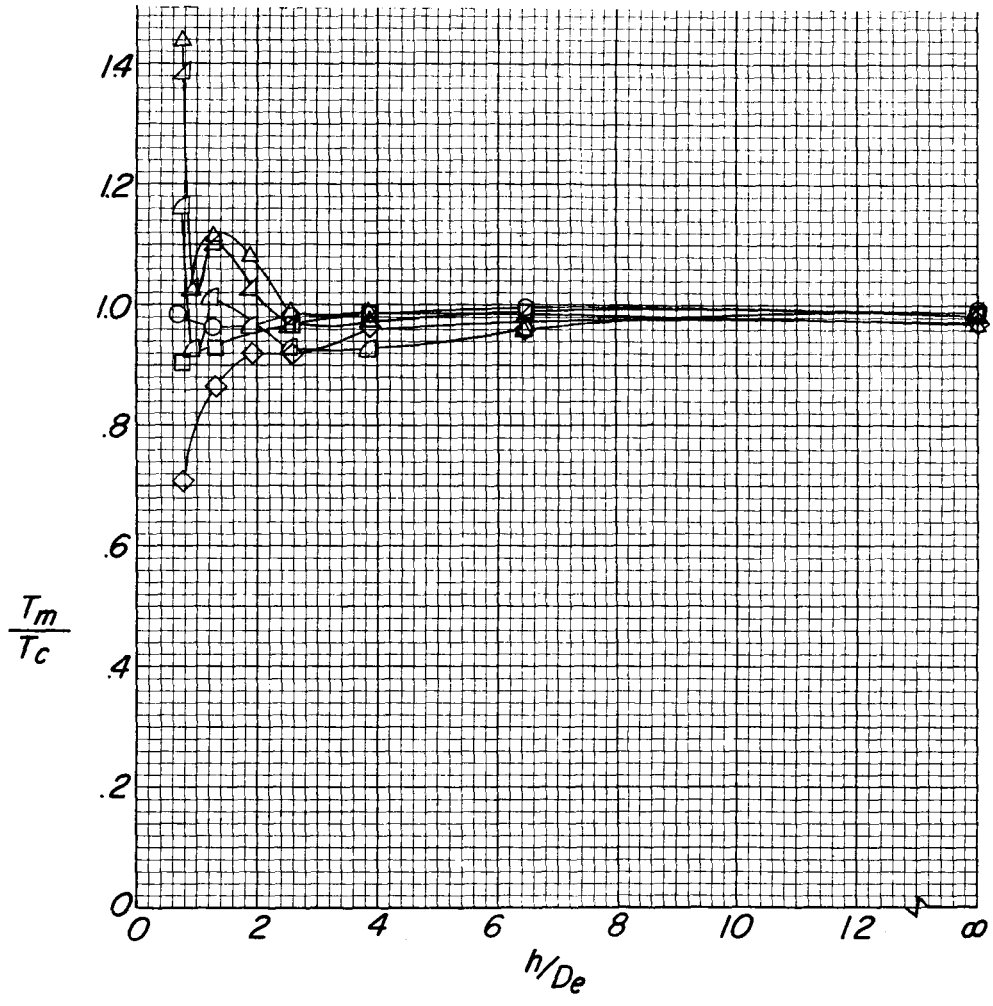

Figure 7.- Effect of fuselage and lifting surface on the thrust characteristics of a double nozzle; 5 inches between centers.

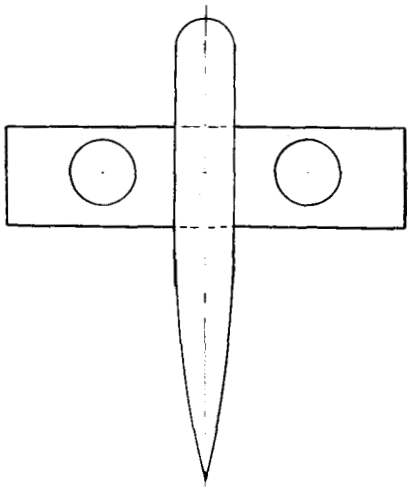

	F	Plate	A_j/A_p
○	Off	6	0.26
□	Off	7	0.10
◇	Off	8	0.05
△	On	6	0.26
◿	On	7	0.10
◺	On	8	0.05

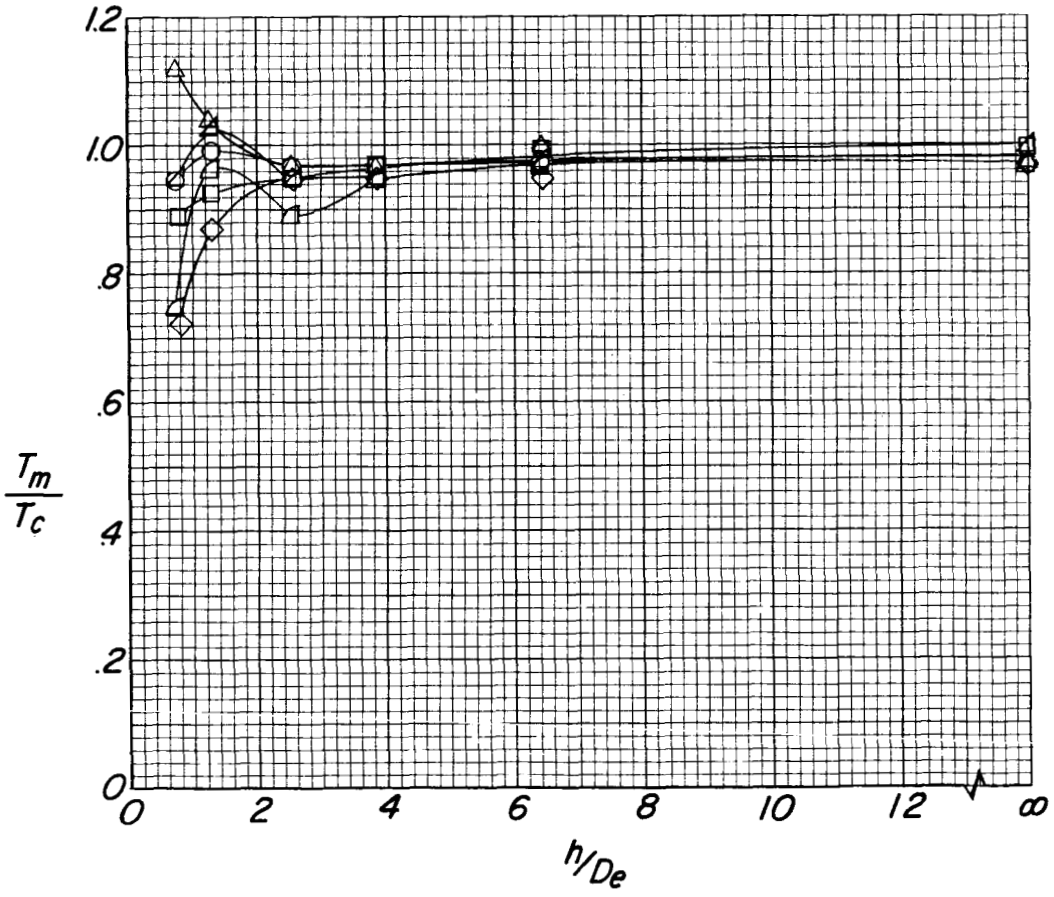

Figure 8.- Effect of lifting surface and fuselage on thrust characteristics of a double nozzle; 7 inches between centers.

NASA - Langley Field, Va. L-868