N 62 10275

NASA TN D-1206

NASA TN D-1206

TECHNICAL NOTE

D-1206

A METHOD FOR CALCULATING THE GENERALIZED AERODYNAMIC FORCES ON RECTANGULAR WINGS DEFORMING SYMMETRICALLY IN SUPERSONIC FLIGHT WITH INDICIAL OR SINUSOIDAL TIME DEPENDENCE

By Reuben Bond, Barbara B. Packard, Robert W. Warner, and Audrey L. Summers

Ames Research Center
Moffett Field, Calif.

NATIONAL AERONAUTICS AND SPACE ADMINISTRATION

WASHINGTON March 1962

NATIONAL AERONAUTICS AND SPACE ADMINISTRATION

TECHNICAL NOTE D-1206

A METHOD FOR CALCULATING THE GENERALIZED AERODYNAMIC FORCES ON RECTANGULAR WINGS DEFORMING SYMMETRICALLY IN SUPERSONIC FLIGHT WITH INDICIAL OR SINUSOIDAL TIME DEPENDENCE

By Reuben Bond, Barbara B. Packard, Robert W. Warner, and Audrey L. Summers

SUMMARY

Indicial and sinusoidal force coefficients are reported in terms of analytical solutions and tabular output samples of digital computer programs. The sinusoidal results are made available primarily for purely sinusoidal problems and for checking the extension of the indicial functions to arbitrary time dependence. Both sets of results are given in terms of generalized forces for which the mode shapes and upwash distributions are polynomials in spanwise and chordwise coordinates based on an origin at the center of the leading edge. In contrast to earlier work, the present results include generalized forces for which modal and/or upwash distributions of odd degree in the spanwise direction have been made symmetrical. These distributions are essential for a general analysis of symmetrical vibration problems.

INTRODUCTION

The purpose of the present report is to extend the numerical tools for unsteady supersonic flow to such a point that a symmetrical flutter or gust-response analysis could actually be performed for linearized potential flow with arbitrary time dependence. The results presented herein are exact for a class of wings with streamwise side edges and supersonic leading and trailing edges. The class considered is comprised of those thin rectangular wings for which a Mach line from a leading corner does not cross the opposite side edge, and certain of the results are further restricted so that Mach lines from the two leading corners do not cross on the wing. Generalized forces are derived for prescribed upwash, where the mode shapes forced are polynomials in chordwise and spanwise coordinates. The spatial dependence of the upwash is also represented by polynomials while the time dependence is indicial for one set of results and steady sinusoidal for another set. The indicial results can be extended to arbitrary time dependence by means of the Duhamel integral and the sinusoidal results by means of the Fourier integral.

Miles (refs. 1 and 2) has given formulas which could, at considerable length, yield numerical generalized forces for the sinusoidally oscillating rectangular wing; and Lomax, Fuller, and Sluder (ref. 3) have obtained many numerical results for the corresponding indicial case. The present report extends the results of reference 3 to include odd-degree spanwise modal and/or upwash polynomials which have been made symmetrical; and this extension is required for a general approximation of actual wing mode shapes in symmetrical vibration problems. Since the formulas of references 1 and 2 are generally unintegrated, the numerical results of the present report represent a necessary extension for the sinusoidal case. Additional theoretical work related to the problem considered here can be found in references 4 to 9. In particular, an appendix of reference 9 describes an IBM 704 program for extending reference 2 to get pressure distributions on an oscillating rectangular wing of rigid chord in supersonic flow, as opposed to the generalized forces on a similar wing of flexible chord found in the present report. A 4 2 6

The numerical results tabulated herein are merely output samples of IBM 704 programs. Additional information on these programs, or their conversion to other computers, is obtainable at the Ames Research Center. For the sake of continuity and completeness, the results have been derived directly from the basic equations of the problem.

NOTATION

A	aspect ratio
a	velocity of sound
b	wing semispan
c_o	wing chord
f_ν^μ	typical term in solution
$g(t)$	time dependence of upwash
I	integral
$I_\nu()$, $J_\nu()$, $K_\nu()$	Bessel functions as defined in reference 10
k	$\frac{\omega c_o}{2V}$ or $\frac{\bar{\omega}}{2M}$
L_{mn}^{pq}	generalized lifting force

$\bar{L}_{mn}^{pq}$	complex amplitude of sinusoidal generalized lifting force
M	Mach number, $\frac{V}{a}$
$\left.\begin{matrix} m \\ n \end{matrix}\right\}$	exponents of $\left\{\begin{matrix} x \\ y \end{matrix}\right\}$ in upwash
p	pressure on wing surface
p_∞	pressure in free stream
$\left.\begin{matrix} p \\ q \end{matrix}\right\}$	exponents of $\left\{\begin{matrix} x \\ y \end{matrix}\right\}$ in generalized force
Q_{mn}^{pq}	dimensionless generalized force coefficient
$\bar{Q}_{mn}^{pq}$	dimensionless complex amplitude coefficient of sinusoidal generalized force
q_∞	free-stream dynamic pressure
S	wing plan area
s	Laplace time transform variable
t	time
t_o	$\frac{at}{c_o}$
V	free-stream velocity
W	upwash, φ_z
W_o	coefficient of upwash on the wing
x,y,z	space coordinates fixed in the wing
Z	vertical displacement of wing surface positive upward
α	$\sqrt{\beta^2\lambda^2 + 2\frac{M\lambda s}{a} + \frac{s^2}{a^2}}$
β	$\sqrt{M^2 - 1}$
λ	Laplace x transform variable
ρ	air density
φ	velocity potential function

$\overline{\varphi}$ Laplace t transform of φ

ψ Laplace x transform of φ

$\overline{\psi}$ Laplace x,t double transform of φ

ω angular frequency of oscillation

$\overline{\omega}$ $\frac{\omega c_o}{a}$

$(\overline{\ })$ Laplace time transform of ( ) in s or complex amplitude of ( ) in ω

OUTLINE OF ANALYSIS

The analytical treatment of the problem is based on the linearized potential flow theory applicable to thin wings and small angles of attack. The linearizing approximations of the wave equation and their limitations are discussed critically in chapter I of reference 5. The form used here is equation A2 of table I of that chapter. The differential equation of the velocity potential is

$$-\beta^2\varphi_{xx} + \varphi_{yy} + \varphi_{zz} - \frac{2V}{a^2}\varphi_{xt} - \frac{1}{a^2}\varphi_{tt} = 0 \tag{1}$$

The coordinate system (x,y,z) is fixed to the wing with the relative free-stream velocity V in the direction of the positive x axis. The undisplaced wing surface lies in the plane $z = 0$ and the surface executes small movements from that plane. Boundary conditions at the wing surface are approximated by the potential φ or its derivatives for $z = 0$. When boundary values are discontinuous through the surface, the upper value will be used as obtained by letting $z \rightarrow 0$ through positive values.

The given boundary value here is the upward velocity component of the air at the surface of the wing. This upwash is given by

$$W(x,y,0,t) = \varphi_z(x,y,0,t) \tag{2}$$

and can be obtained from the motion of the wing by

$$W = Z_t + VZ_x \tag{3}$$

where $Z(x,y,t)$ defines the vertical displacement of any point on the wing at any time. The upwash can also be obtained from a gust.

The resulting aerodynamic pressure change on the upper surface of the wing is given by

$$p - p_\infty = -\rho(\varphi_t + V\varphi_x) \tag{4}$$

and the requirement of the same upwash on both sides leads to a reversal of the sign of the pressure change across the wing and a pressure difference, or local lift, of

$$\Delta p = -2(p - p_\infty) = 2\rho(\varphi_t + V\varphi_x) \tag{5}$$

The undisplaced wing lies in the plane $z = 0$ with leading edge at $x = 0$, side edges of $y = \pm b$, and trailing edge at $x = c_o$ (sketch (a)). The boundary conditions require that the upwash have a prescribed distribution on the wing and that the pressure be continuous off the wing except for analytical discontinuities in regions that do not influence the flow on the wing. Since no influence can be propagated upstream in supersonic flow, it is not necessary to require an analytical solution to satisfy any conditions in the region $x > c_o$.

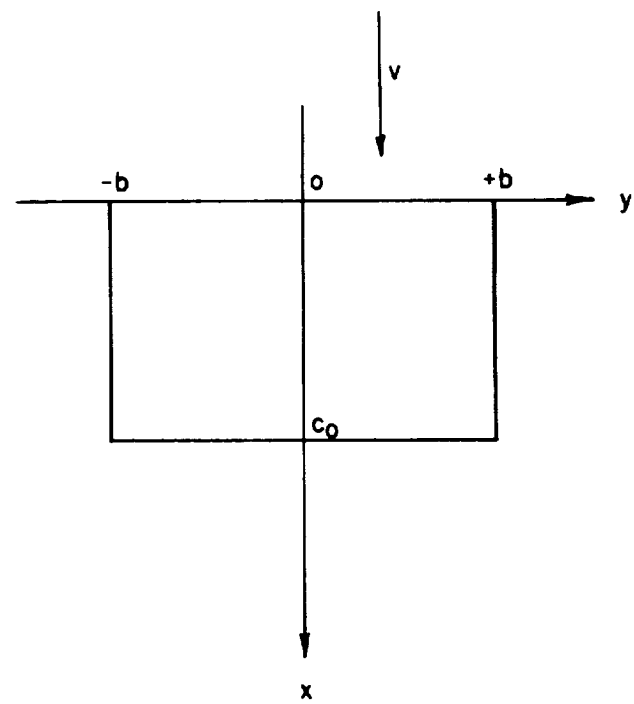

Sketch (a)

The analytical formulation of the boundary conditions is stated in appendix A, equations (A2) through (A6). Solutions are first obtained in general form for all positive x and t. This is a mathematical convenience that does not affect the results for finite x and t because no influence can propagate backward in those coordinates. Partial solutions are obtained for single side edges and for no side edge and these are combined to form a solution satisfying all required conditions for a limited range of x.

The method of solution is based on the use of Laplace transforms in x and t to obtain a transformed differential equation and boundary conditions in the two independent variables y and z. The heart of the mathematical problem is in the mixed boundary condition arising at a streamwise edge and is stated analytically in equation (A16) with boundary

conditions (A21) through (A24). This problem has been successfully attacked by several methods including those of references 1, 2, 3, 7, 8, and 11. The method used here is similar to that of Landahl (ref. 11) but is simplified since the use of Fourier integrals has been avoided and the solution has been worked out in detail.

The Laplace inversion in x is performed for the single side edge case of boundary conditions (A21) and (A22) and the resulting time transformed potential $\bar{\varphi}_I$ is given in integral form in equation (A33). This is included to emphasize the difference between the influence function for time-dependent flow and that for steady flow. The result is stated in equation (A33).

The solution of equation (A16) and boundary conditions (A18) to (A20) usable for small x is given in equation (A47). An alternate form is obtained in equation (A48).

At this stage of the analysis specialized boundary values are introduced and form the subjects of appendixes B, C, and D. The upwash is taken in the form

$$W(x,y,0,t) = W_o g(t) \left(\frac{x}{c_o}\right)^m \left|\frac{y}{c_o}\right|^n \tag{6}$$

for

$$x \geq 0 \ , \qquad |y| \leq b \ , \qquad t \geq 0$$

The time dependence is taken in two forms:

$$\text{Indicial} \qquad g(t) = \begin{cases} 0, & t < 0 \\ 1, & t > 0 \end{cases} \tag{7}$$

$$\text{Sinusoidal} \qquad g(t) = \begin{cases} 0, & t < 0 \\ e^{i\omega t} & t > 0 \end{cases} \tag{8}$$

The indicial case yields a transient solution for small t and the steady-state solution for larger t. The sinusoidal case yields a complicated transient for small t and the steady sinusoidal solution for larger t. The steady state starts at

$$t = \frac{c_o}{V - a} \tag{9}$$

The transient sinusoidal solution is not considered here.

Results are presented as weighted integrals of the local lift of equation (5),

$$L_{mn}^{pq} = \int_0^{c_o}\int_{-b}^{b} 2\rho(\varphi_t + V\varphi_x)_{z=o}\left(\frac{x}{c_o}\right)^p \left|\frac{y}{c_o}\right|^q dy\ dx \tag{10}$$

and this generalized lift is given in a dimensionless coefficient

$$Q_{mn}^{pq} = \frac{2\rho V}{q_\infty S W_o}\int_0^{c_o}\int_{-b}^{b} (\varphi_t + V\varphi_x)_{z=o}\left(\frac{x}{c_o}\right)^p \left|\frac{y}{c_o}\right|^q dy\ dx \tag{11}$$

so that

$$L_{mn}^{pq} = \frac{W_o}{V}\, q_\infty S Q_{mn}^{pq} \tag{12}$$

This generalized force coefficient Q_{mn}^{pq} is thus defined to be independent of the coefficient W_o of equation (6) making it necessary to reintroduce W_o in the formulation for generalized lift in equation (12).

RESULTS AND DISCUSSION

Nature and Applicability of Results

The generalized force coefficients for indicial time dependence, $Q_{mn}^{pq}(t_o)$, are given in equation (C17) and amplitudes, $\overline{Q}_{mn}^{pq}(\overline{\omega})$, of coefficients for sinusoidal time dependence are presented in equation (D13). In addition, because of limitations in the numerical computation, equations (D15) and (D33) are given for the special cases of zero frequency and infinite frequency, respectively. The subscripts m and n in these force coefficients are the exponents of x and y in the upwash distributions, with the origin of coordinates at the center of the leading edge. The superscripts p and q are the exponents of x and y in the modal distribution which is forced, that is, the weighting function. All odd-degree spanwise distributions are made symmetrical. The solutions just described are applicable for low supersonic Mach numbers, M, and for aspect ratio, A, greater than $2/\sqrt{M^2 - 1}$ if either the modal or upwash spanwise distribution in the generalized force is of odd degree, or greater than $1/\sqrt{M^2 - 1}$ if both are of even degree.

The most usable results of the present report are IBM 704 programs for $Q_{mn}^{pq}(t_o)$ and $\overline{Q}_{mn}^{pq}(\overline{\omega})$. The programs can accommodate values of the upwash exponents, m, n, and the modal exponents, p, q, from 0 through 5. If higher exponents are desired, the programs can be extended with minor modifications. The program for the indicial time dependence prints values of the force coefficients, $Q_{mn}^{pq}(t_o)$, for equal increments of the dimensionless time t_o (defined under Notation) in the ranges $0 < t_o < 1/(M + 1)$ and $1/(M + 1) < t_o < 1/(M - 1)$. The number of values of t_o in each range is an input quantity. Similarly, for sinusoidal time dependence, the number of values of reduced frequency k (defined under Notation) desired in the ranges $0 < k < 0.5$, $0.5 < k < 1.0$, and $1.0 < k < 2$ is an input.

Limited numerical results are presented in table I for indicial force coefficients, $Q_{mn}^{pq}(t_o)$, and in table II for the sinusoidal amplitudes, $\overline{Q}_{mn}^{pq}(\overline{\omega})$. These results serve primarily as samples of the 704 program but may be directly usable for problems which happen to have the appropriate parameters. In these tables the upwash exponents, m, n, and the modal exponents, p, q, range only from 0 through 2 for a Mach number of 1.2 and an aspect ratio of 4. The n and q designations in tables I and II indicate that the values of n and q can be interchanged, that is, there is reciprocity between the upwash and the forced mode in the y, or spanwise direction (this being a special case of equation (39) of ref. 3). In table I, the dimensionless time t_o ranges from 0 to 5, the latter being the steady-state value of t_o for a Mach number of 1.2. In table II, the reduced frequency k ranges from 0.02 to 2; and the avoidance of $k = 0$ indicates a weakness in the machine computations (due to $\overline{\omega}$ in the denominator in equation (D12)), which will be discussed later. Spot checks indicate that the numbers in the tables, and hence the programs, are accurate to ±1 in the fourth figure, or better.

As indicated in the Introduction, the indicial results can be used for arbitrary time dependence by means of the Duhamel integral and the sinusoidal results by means of the Fourier integral. There is some indication, however, that the present indicial results are more readily usable in this fashion than are the present sinusoidal results. The reason for this indicial perference is that the entire range of variation with (dimensionless) time is tabulated herein for each indicial function while only a small portion of the variation with (reduced) frequency is tabulated for each sinusoidal function, and this makes the superposition for arbitrary time dependence easier and more accurate for the indicial case. The full-range tabulation for the indicial case is possible because the entire variation in the aerodynamic force for an indicial function in supersonic flow takes place over a short period of (dimensionless) time. In contrast, the sinusoidal functions vary over a range of (reduced) frequency from zero to infinity, and the relatively small range of actual tabulation described earlier is made available primarily for such purely sinusoidal

problems as may arise and for checking the time superposition of the indicial results. It is expected that the advantage just described for the indicial function will be maintained when the equations of motion are solved by direct numerical integration with respect to time, as opposed to a transform method. The superposition of indicial functions by means of the Duhamel integral is illustrated in equation (31) of reference 3, among other places.

It should be noted at this point that the analytical indicial coefficients of the present report agree with those of reference 3 for the even-degree spanwise distributions contained in that reference. The basis for this analytical check is the table of the function $J(g,n)$ in reference 3. In addition, for the particular four columns in table I that have immediately corresponding columns in reference 3, namely, the three with $n = q = m = 0$ and $p = 0, 1, 2$, plus a fourth column $n = 0$, $q = 0$, $m = 1$, $p = 1$, the beginning and end points show numerical agreement. The probability of further numerical agreement is indicated by the nearly identical indicial-function values at nearly corresponding dimensionless times between the end points. These comparisons tend to validate the indicial program. In addition, certain of the sinusoidal results agree with calculations for specialized cases as given, for example, in references 1, 2, 7, and 8.

Comparisons Between Indicial and Sinusoidal Results

When equation (C17) is written for $t_o = 1/(M - 1)$ (steady state) and is compared with equation (D15), it is seen that

$$Q_{mn}^{pq}\left(t_o \geq \frac{1}{M - 1}\right) = \overline{Q}_{mn}^{pq}\ (\overline{\omega} = 0) \tag{13}$$

This is to be expected since both specializations are for steady state, and hence equation (13) serves as a check. Similarly, the writing of equation (C17) for $t_o = 0$ and comparison with equation (D33) yields

$$Q_{mn}^{pq}\ (t_o = 0) = \overline{Q}_{mn}^{pq}\ (\overline{\omega} = \infty) \tag{14}$$

Now equation (13) resolves the computational difficulty mentioned earlier at $k = 0$ (or $\overline{\omega} = 0$), since the steady-state values at the end of the columns in table I can be used for the missing $k = 0$ values in table II. Thus, if sinusoidal results are desired for parameters other than those tabulated herein, and if $k = 0$ is essential, the indicial program can be used as an auxiliary for $k = 0$, with the input time increments selected to include steady state and few other times. Knowledge of the value of a generalized force coefficient for $k = 0$ is, of course, useful in determining the minimum value of k which can be introduced into the sinusoidal program. For example, comparison of the steady-state values

in table I with the $k = 0.02$ values in table II shows a difference of 5 in the third significant figure for one case and a difference of 1 in that figure, or better, for all other cases. Thus steady state has been approached rather closely at $k = 0.02$ with no major deviations due to the 704 program; hence the program is usable for values of k as low as 0.02, at least for the parameters of tables I and II.

CONCLUDING REMARKS

Generalized indicial and sinusoidal force coefficients for rectangular wings deforming symmetrically in supersonic flight have been derived on the basis of linearized aerodynamic theory and programed for the IBM 704. Additional information on these programs is obtainable at Ames Research Center. The analytical solutions are exact for rectangular wings and for the specified polynomials in upwash and modal distributions. All odd-degree spanwise distributions are made symmetrical. The solutions are applicable for a chord length such that a Mach line from a leading corner does not cross the opposite side edge, provided neither the modal nor the upwash distribution in the generalized force is of odd-degree spanwise. Otherwise, the solutions are limited to half the above chord length. There is some indication that the present indicial solutions are more readily extensible to arbitrary time dependence that are the sinusoidal solutions.

Limited numerical results are tabulated for both the indicial and the sinusoidal cases, primarily as samples of the outputs of the 704 programs. As suggested by the absence of zero frequency in the sinusoidal tabulations, that frequency cannot be supplied by the sinusoidal program. It can, however, be supplied by the indicial program at steady state. The smoothness of the approach of the sinusoidal results to steady state can be used to determine how close to zero frequency the program can be carried. This criterion indicates that for the limited parameters tabulated herein the sinusoidal program is valid for a dimensionless reduced frequency (radians per semichord of travel) as low as 0.02.

Ames Research Center
National Aeronautics and Space Administration
Moffett Field, Calif., Nov. 20, 1961

APPENDIX A

SOLUTION FOR TRANSFORMED POTENTIAL

The linearized differential equation of time dependent supersonic flow over a thin wing at small angle of attack is

$$-\beta^2\varphi_{xx} + \varphi_{yy} + \varphi_{zz} - \frac{2V}{a^2}\varphi_{xt} - \frac{1}{a^2}\varphi_{tt} = 0 \tag{A1}$$

The required boundary conditions are

$$\varphi = 0 \quad \text{for} \quad x \leq 0 \tag{A2}$$

$$\varphi = 0 \quad \text{for} \quad t \leq 0 \tag{A3}$$

$$W = \varphi_z \quad \text{given for} \quad z = 0,\ x > 0,\ t > 0,\ |y| < b \tag{A4}$$

$$\varphi = 0 \quad \text{for} \quad z = 0,\ x > 0,\ t > 0,\ |y| > b \tag{A5}$$

$$\varphi = 0 \quad \text{for} \quad z \ \text{sufficiently large} \tag{A6}$$

A solution valid for $x < 2\beta b$ can be obtained in terms of integrations of fairly manageable form. For larger values of x the boundary conditions (A4) and (A5) impose more severe requirements leading to complicated multiple integrals. The condition $x < 2\beta b$ implies that the Mach lines from the leading corners do not intersect the opposite edges (sketch (b)).

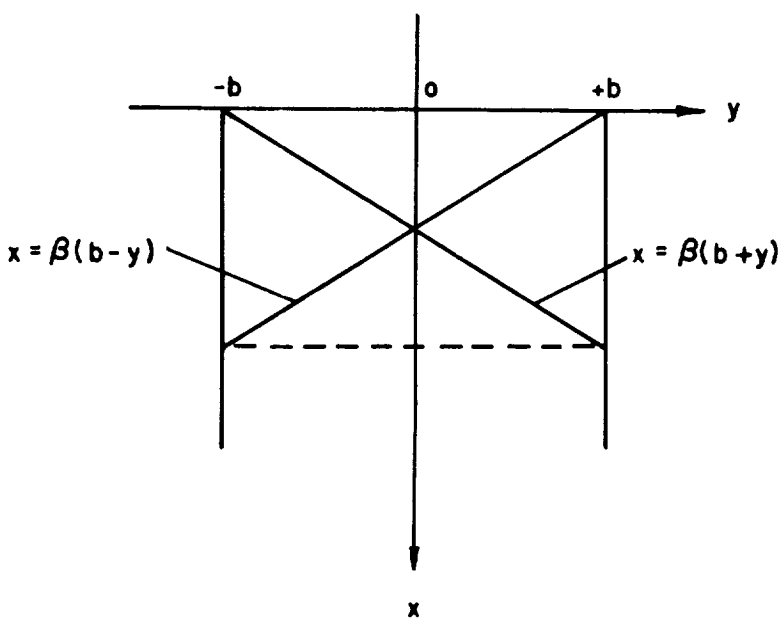

Sketch (b)

The time variable is eliminated from equation (A1) by a Laplace transformation

$$\bar{\varphi}(x,y,z) = \int_0^\infty e^{-st}\varphi(x,y,z,t)dt \qquad \mathrm{Re}(s) > 0 \tag{A7}$$

Then

$$\bar{W} = \int_0^\infty e^{-st}W\,dt \tag{A8}$$

A426

and equation (A1) becomes

$$-\beta^2\bar{\varphi}_{xx} + \bar{\varphi}_{yy} + \bar{\varphi}_{zz} - \frac{2Vs}{a^2}\bar{\varphi}_x - \frac{s^2}{a^2}\bar{\varphi} = 0 \tag{A9}$$

Boundary condition (A3) is satisfied and the others become

$$\bar{\varphi} = 0 \qquad \text{for} \quad x \leq 0 \tag{A10}$$

$$\bar{W} = \bar{\varphi}_z \qquad \text{given for} \quad z = 0,\ x > 0,\ |y| < b \tag{A11}$$

$$\bar{\varphi} = 0 \qquad \text{for} \quad z = 0,\ x > 0,\ |y| > b \tag{A12}$$

$$\bar{\varphi} = 0 \qquad \text{for} \quad z \ \text{sufficiently large} \tag{A13}$$

A second Laplace transform eliminates x from equation (A9)

$$\bar{\psi}(y,z) = \int_0^\infty e^{-\lambda x}\bar{\varphi}(x,y,z)dx \qquad \mathrm{Re}(\lambda) > 0 \tag{A14}$$

and

$$\bar{\psi}_z(y,z) = \int_0^\infty e^{-\lambda\psi}\bar{W}(x,y,z)dx \tag{A15}$$

equation (A9) becomes

$$\bar{\psi}_{yy} + \bar{\psi}_{zz} - \alpha^2\bar{\psi} = 0 \tag{A16}$$

where

$$\alpha = \sqrt{\beta^2\lambda^2 + \frac{2Vs\lambda}{a^2} + \frac{s^2}{a^2}} \tag{A17}$$

and the square root is chosen so that for real s and λ, α is positive when s and λ are positive. In the inverse transform integrations to be used later, this serves to define α for complex s or λ.

Boundary conditions (A2) and (A10) are satisfied and the remaining boundary conditions become

$$\bar{\psi}_z \text{ given for } z = 0, \quad |y| < b \tag{A18}$$

$$\bar{\psi} = 0 \text{ for } z = 0, \quad |y| > b \tag{A19}$$

$$\bar{\psi} \to 0 \text{ for } z \to \infty \tag{A20}$$

A complete solution of equation (A16) for these boundary conditions is not attempted here. For the limitation $x < 2\beta b$ it is sufficient to obtain some special forms of solutions that can be combined to form a solution satisfying the required conditions. Three boundary value cases are considered for equation (A16).

Case I: $\bar{\psi}(y,0) = 0$ for $y < -b$ (A21)

$\bar{\psi}_z(y,0)$ given for $y > -b$ (A22)

Case II: $\bar{\psi}(y,0) = 0$ for $y > b$ (A23)

$\bar{\psi}_z(y,0)$ given for $y < b$ (A24)

Case III: $\bar{\psi}_z(y,0)$ given for all y (A25)

In equation (A16) the introduction of polar coordinates (sketch (c))

$$\left.\begin{aligned} y - \eta &= R\cos\theta \\ z &= R\sin\theta \end{aligned}\right\} \tag{A26}$$

gives

$$\bar{\psi}_{RR} + \frac{1}{R}\bar{\psi}_R + \frac{1}{R^2}\bar{\psi}_{\theta\theta} - \alpha^2\bar{\psi} = 0 \tag{A27}$$

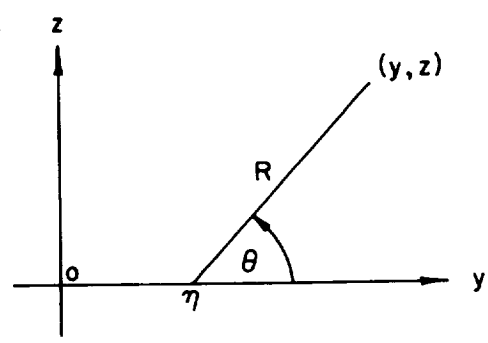

Sketch (c)

Separation of variables in these coordinates gives simple solutions

$$\bar{\psi} = \left\{\begin{matrix} \sin\frac{\theta}{2} \\ \cos\frac{\theta}{2} \end{matrix}\right\} \frac{e^{-\alpha R}}{\sqrt{R}}$$

These can be used to obtain solutions for the boundary value, cases I and II.

For case I, let

$$\bar{\psi}_I(y,z) = \int_{-b}^{\infty} \bar{\psi}_o(y,\eta,z)F(\eta)d\eta \tag{A28}$$

where

$$\bar{\psi}_o(y,\eta,z) = \bar{\psi}_o(R,\theta) = \cos\frac{\theta}{2}\frac{e^{-\alpha R}}{\sqrt{R}}, \qquad 0 \leq \theta \leq 2\pi \tag{A29}$$

Then

A426.

$$\bar{\psi}_o(y,\eta,\infty) = 0$$

$$\bar{\psi}_o(y,\eta,0) = \begin{cases} \dfrac{e^{-\alpha R}}{\sqrt{R}} = \dfrac{e^{-\alpha(y-\eta)}}{\sqrt{y-\eta}}, & \eta < y \\ 0, & y < \eta \end{cases}$$

and

$$\bar{\psi}_I(y,0) = \int_{-b}^{y} F(\eta)\frac{e^{-\alpha(y-\eta)}}{\sqrt{y-\eta}}d\eta$$

$$= 0, \quad \text{if} \quad y < -b$$

Thus $\bar{\psi}_I$ of equation (A28) satisfies the boundary conditions (A20) and (A21).

To find $F(\eta)$ define

$$\bar{G}(y,z) = \int_y^{\infty} e^{-\alpha y}\bar{\psi}_z(y,z)dy$$

$$= \int_y^{\infty} e^{-\alpha y}dy \frac{\partial}{\partial z}\int_{-b}^{\infty} F(\eta)\bar{\psi}_o(y,\eta,z)d\eta$$

$$= \int_{-b}^{\infty} F(\eta)d\eta \frac{\partial}{\partial z}\int_y^{\infty} \cos\frac{\theta}{2}\frac{e^{-\alpha(R+y)}}{\sqrt{R}}dy$$

The differentiation of the inner integral can be obtained easily from a change of variable of integration

$$\xi = y - \eta + R$$

Then

$$\frac{\partial}{\partial z}\int_y^\infty \cos\frac{\theta}{2}\,\frac{e^{-\alpha(R+y)}}{\sqrt{R}}\,dy = \pm\frac{\partial}{\partial z}\int_{y-\eta+R}^\infty \frac{e^{-\alpha(\eta+\xi)}}{\sqrt{2\xi}}\,d\xi$$

$$= -\sin\frac{\theta}{2}\,\frac{e^{-\alpha(R+y)}}{\sqrt{R}}$$

The choice of sign for the second integral is determined from the sign of $\cos(\theta/2)$. Then

$$\bar{G}(y,z) = -\int_{-b}^\infty F(\eta)\sin\frac{\theta}{2}\,\frac{e^{-\alpha(R+y)}}{\sqrt{R}}\,d\eta$$

and for $z = 0$,

$$\bar{G}(y,0) = -\int_{\max(-b,y)}^\infty F(\eta)\,\frac{e^{-\alpha\eta}}{\sqrt{\eta - y}}\,d\eta$$

From its definition $\bar{G}(y,0)$ is known for $y > -b$ and

$$\bar{G}(y,0) = -\int_y^\infty \frac{F(\eta)e^{-\alpha\eta}}{\sqrt{\eta - y}}\,d\eta$$

This is an integral equation similar to Abel's equation and is solved for $F(\eta)$ by noting that

$$\int_\xi^\infty \frac{\bar{G}(y,0)}{\sqrt{y - \xi}}\,dy = -\pi\int_\xi^\infty F(\eta)e^{-\alpha\eta}\,d\eta$$

and by differentiation

$$F(\eta) = \frac{e^{\alpha\eta}}{\pi}\frac{d}{d\eta}\int_\eta^\infty \frac{\bar{G}(y,0)}{\sqrt{y - \eta}}\,dy$$

$$= -\frac{e^{\alpha\eta}}{\pi}\int_\eta^\infty \frac{e^{-\alpha y}\bar{\psi}_z(y,0)}{\sqrt{y - \eta}}\,dy$$

Substituting this definition of $F(\eta)$ into equation (A28) gives

$$\bar{\psi}_I(y,z) = -\frac{1}{\pi}\int_{-b}^{\infty} \cos\frac{\theta}{2}\,\frac{e^{-\alpha(R-\eta)}}{\sqrt{R}}\,d\eta \int_{\eta}^{\infty} \frac{e^{-\alpha y'}\bar{\psi}_z(y',0)}{\sqrt{y'-\eta}}\,dy'$$

$$= -\frac{1}{\pi}\int_{-b}^{\infty} \bar{\psi}_z(y',0)dy' \int_{-b}^{y'} \cos\frac{\theta}{2}\,\frac{e^{-\alpha(R+y'-\eta)}}{\sqrt{R}\,\sqrt{y'-\eta}}\,d\eta \qquad \text{(A30)}$$

In the second integral of equation (A30) a change of variable of integration

$$\xi = R + y' - \eta$$

A426

yields

$$\bar{\psi}_I(y,z) = -\frac{1}{\pi}\int_{-b}^{\infty} \bar{\psi}_z(y',0)dy' \int_{\sqrt{(y-y')^2+z^2}}^{b+y'+\sqrt{(b+y)^2+z^2}} \frac{e^{-\alpha\xi}}{\sqrt{\xi^2-(y-y')^2-z^2}}\,d\xi \qquad \text{(A31)}$$

This is the form that appears first in some methods of solution.

Equation (A31) is useful to obtain a general formulation for $\bar{\varphi}_I$ with boundary conditions corresponding to those of $\bar{\psi}_I$ in equations (A21) and (A22). When the Laplace inversion formula

$$\bar{\varphi} = \frac{1}{2\pi i}\int_{c-i\infty}^{c+i\infty} e^{\lambda x}\bar{\psi}\,d\lambda, \qquad c > 0$$

and the definition of $\bar{\psi}_z$ from equation (A15) are used

$$\bar{\varphi}_I = -\frac{1}{\pi}\int_{c}^{\infty} dx' \int_{-b}^{\infty} \bar{W}(x',y',0)dy' \frac{1}{2\pi i}\int_{c-i\infty}^{c+i\infty} e^{\lambda(x-x')}\,d\lambda$$

$$\int_{\xi_1}^{\xi_2} \frac{e^{-\alpha\xi}}{\sqrt{\xi^2-(y-y')^2-z^2}}\,d\xi \qquad \text{(A32)}$$

where

$$\xi_1 = \sqrt{(y-y')^2+z^2}$$

$$\xi_2 = b + y' + \sqrt{(b+y)^2+z^2}$$

In the inner repeated integral a reversal of the order of integration yields a nonconvergent integral in λ. It is necessary to resort to a device which permits the integration. The integral can be expressed as a derivative

$$\left[- \frac{\partial}{\partial\sigma} \frac{1}{2\pi i} \int_{c-i\infty}^{c+i\infty} \frac{e^{\lambda(x-x')}}{\alpha} d\lambda \int_{\xi_1}^{\xi_2} \frac{e^{-\alpha\xi\sigma}}{\xi\sqrt{\xi^2 - \xi_1^{\,2}}} d\xi \right]_{\sigma=1}$$

In the following it is to be understood that σ is put equal to 1 after differentiation. Now when the order of integration is inverted, this becomes

A426.

$$- \frac{\partial}{\partial\sigma} \int_{\xi_1}^{\xi_2} \frac{d\xi}{\xi\sqrt{\xi^2 - \xi_1^{\,2}}} \frac{1}{2\pi i} \int_{c-i\infty}^{c+i\infty} \frac{e^{\lambda(x-x')-\alpha\sigma\xi}}{\alpha} d\lambda$$

In the inner integral the substitution

$$\lambda = \zeta + \frac{Vs}{\beta^2 a^2}$$

changes the integral to

$$\frac{e^{-Vs(x-x')/\beta^2a^2}}{\beta} \frac{1}{2\pi i} \int_{c+(s/\beta^2a)-i\infty}^{c+(s/\beta^2a)+i\infty} \frac{e^{\zeta(x-x')-\beta\sigma\xi\sqrt{\zeta^2 - (s/\beta^2a)^2}}}{\sqrt{\zeta^2 - (s/\beta^2a)^2}} d\zeta$$

$$= \frac{e^{-Vs(x-x')/\beta^2a^2}}{\beta} I_0\left[\frac{s}{\beta^2a}\sqrt{(x - x')^2 - (\beta\sigma\xi)^2} \right], \qquad x - x' > \beta\sigma\xi$$

$$= 0, \qquad x - x' < \beta\sigma\xi$$

(Ref. 12, p. 249, no. 36). Then the integral becomes

$$\frac{-e^{-Vs(x-x')/\beta^2a^2}}{\beta} \frac{\partial}{\partial\sigma} \int_{\xi_1}^{\min[(x-x'/\beta\sigma),\xi_2]} \frac{I_0\left[s/\beta^2a\sqrt{(x - x')^2 - (\beta\sigma\xi)^2}\right]}{\xi\sqrt{\xi^2 - \xi_1^{\,2}}} d\xi$$

Three cases are found: If $x - x' < \beta\xi_1$ the integral vanishes. If $\beta\xi_1 < x - x' < \beta\xi_2$ differentiation gives, with

$$\eta = \beta\sqrt{\xi^2 - \xi_1^{\,2}},$$

$$\frac{e^{-Vs(x-x')/\beta^2a^2}}{\sqrt{(x-x')^2-\beta^2\xi_1^2}} + e^{-Vs(x-x')/\beta^2a^2}\frac{s}{\beta^2a}\int_0^{\sqrt{(x-x')^2-\beta^2\xi_1^2}} \frac{I_1\left[s/\beta^2a\sqrt{(x-x')^2-\beta^2\xi_1^2-\eta^2}\right]}{\sqrt{(x-x')^2-\beta^2\xi_1^2-\eta^2}}\,d\eta$$

$$= e^{-Vs(x-x')/\beta^2a^2}\frac{\cosh(s/\beta^2a)\sqrt{(x-x')^2-\beta^2\xi_1^2}}{\sqrt{(x-x')^2-\beta^2\xi_1^2}}$$

If $x - x' > \beta\xi_2$ the integral is

$$e^{-Vs(x-x')/\beta^2a^2}\frac{s}{\beta^2a}\int_0^{\beta\sqrt{\xi_2^2-\xi_1^2}} \frac{I_1\left[s/\beta^2a\sqrt{(x-x')^2-\beta^2\xi_1^2-\eta^2}\right]}{\sqrt{(x-x')^2-\beta^2\xi_1^2-\eta^2}}\,d\eta$$

Substituting these results in equation (A32) yields

$$\bar{\varphi}_I = -\frac{1}{\pi}\iint_{S_1}\bar{W}(x',y',0)\frac{e^{-Vs(x-x')/\beta^2a^2}\cosh(s/\beta^2a)\sqrt{(x-x')^2-\beta^2[(y-y')^2+z^2]}}{\sqrt{(x-x')^2-\beta^2[(y-y')^2+z^2]}}\,dx'\,dy'$$

$$-\frac{1}{\pi}\iint_{S_2}\bar{W}(x',y',0)dx'\,dy'e^{-Vs(x-x')/\beta^2a^2}\frac{s}{\beta^2a}$$

$$\int_0^{\beta\sqrt{2(b+y')[b+y+\sqrt{(b+y)^2+z^2}]}}\frac{I_1\left\{s/\beta^2a\sqrt{(x-x')^2-\beta^2[(y-y')^2+z^2]-\eta^2}\right\}}{\sqrt{(x-x')^2-\beta^2[(y-y')^2+z^2]-\eta^2}}\,d\eta \tag{A33}$$

The area of integration is bounded by the requirements (sketch (d))

$$x' \geq 0$$

$$y' \geq -b$$

$$x - x' \geq \beta\sqrt{(y-y')^2+z^2}$$

and is divided by the straight line

$$x - x' = \beta\left[b + y' + \sqrt{(b+y)^2+z^2}\right]$$

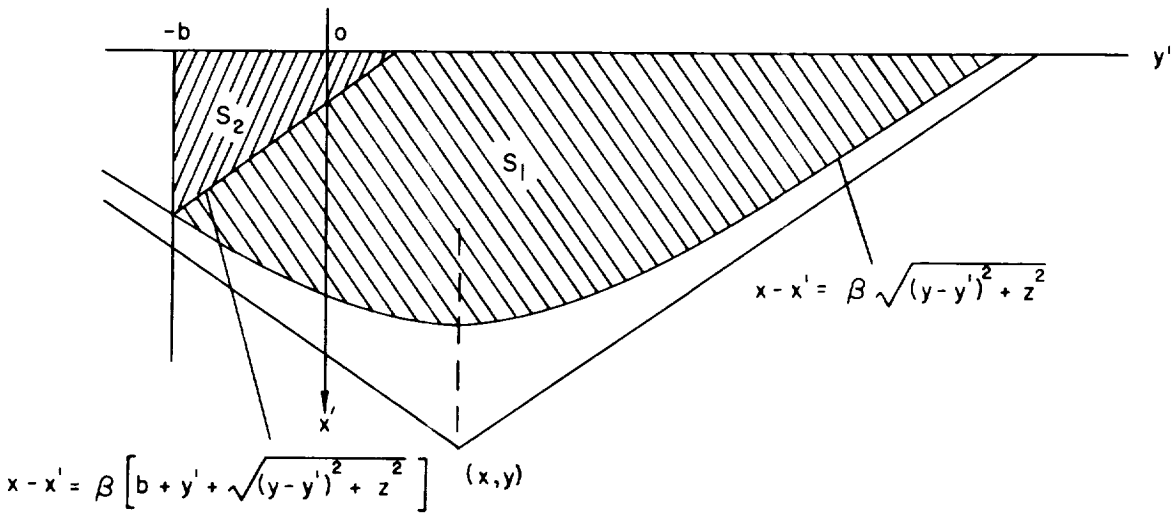

Sketch (d)

In the more familiar case of $z = 0$ the area S_1 is recognized as the entire area of integration for the steady-state solution of Evvard, a result that appears in equation (A33) with $s = 0$. This should be so because $s = 0$ reduces equation (A9) to the equation for steady flow.

In equation (A33) it is seen that the influence at (x,y) from a point (x',y') in S_1 is the same as if there were no edge. This must be so because a distrubance originating in S_1 cannot be propagated to the edge and then reflected to (x,y). Unlike the steady-state result, the second term of equation (A33) shows that a disturbance from S_2 does affect the potential at (x,y).

The solution of equation (A16) for case II with boundary conditions (A23) and (A24) can be treated in the same manner with the function of equation (A29) replaced by

$$\sin\frac{\theta}{2}\,\frac{e^{-\alpha R}}{\sqrt{R}}$$

The procedure is the same with some changes of sign. The solution is

$$\bar{\psi}_{II}(y,z) = -\frac{1}{\pi}\int_{-\infty}^{b} \sin\frac{\theta}{2}\,\frac{e^{-\alpha(R+\eta)}}{\sqrt{R}}\,d\eta \int_{-\infty}^{\eta} e^{\alpha y'}\,\frac{\bar{\psi}_z(y',0)}{\sqrt{\eta - y'}}\,dy'$$

$$= -\frac{1}{\pi}\int_{-\infty}^{b} \bar{\psi}_z(y',0)dy' \int_{y'}^{b} \sin\frac{\theta}{2}\,\frac{e^{-\alpha(R+\eta-y')}}{\sqrt{R}\,\sqrt{\eta - y'}}\,d\eta \qquad \text{(A34)}$$

The solution for case III with boundary condition (A25) can be obtained from either case I or II with $b = \infty$. Then, from I,

$$\psi_{III}(y,0) = -\frac{1}{\pi}\int_{-\infty}^{\infty} \bar{\psi}_z(y',0)dy' \int_{-\infty}^{y'} \cos\frac{\theta}{2}\,\frac{e^{-\alpha(R+y'-\eta)}}{\sqrt{R}\,\sqrt{y'-\eta}}\,d\eta$$

$$= -\frac{1}{\pi}\int_{-\infty}^{\infty} \bar{\psi}_z(y',0)dy' \int_{\xi_1}^{\infty} \frac{e^{-\alpha\xi}}{\sqrt{\xi^2-\xi_1^2}}\,d\xi$$

$$= -\frac{1}{\pi}\int_{-\infty}^{\infty} \bar{\psi}_z(y',0)dy' \int_{1}^{\infty} \frac{e^{-\alpha\sigma\xi_1}}{\sqrt{\sigma^2-1}}\,d\sigma$$

$$= -\frac{1}{\pi}\int_{-\infty}^{\infty} \bar{\psi}_z(y',0)K_0\left[\alpha\sqrt{(y-y')^2+z^2}\right]dy' \qquad \text{(A35)}$$

A426

This is a known result that can be obtained by direct procedures.

The three solutions that have been obtained can be combined to yield a solution satisfying all the boundary conditions for $x \leq 2\beta b$. The boundary value $\bar{\psi}_z(y,0)$ is known only for $|y| < b$ but in some cases with canceling results it will be treated as if it were known also for $|y| > b$.

A difference solution $\bar{\psi}_{IV}$ is defined by

$$\bar{\psi}_{IV} = \bar{\psi}_I - \bar{\psi}_{III} \qquad \text{(A36)}$$

where $\bar{\psi}_{III}$ is defined with the condition that $\bar{\psi}_z(y,0) = 0$ for $y < -b$. Combining from equations (A30) and (A35) yields

$$\bar{\psi}_{IV} = \frac{1}{\pi}\int_{-b}^{\infty} \bar{\psi}_z(y',0)dy' \int_{-\infty}^{-b} \cos\frac{\theta}{2}\,\frac{e^{-\alpha(R+y'-\eta)}}{\sqrt{R}\,\sqrt{y'-\eta}}\,d\eta$$

$$= \frac{1}{\pi}\int_{-b}^{\infty} \bar{\psi}_z(y',0)dy' \int_{\xi_2}^{\infty} \frac{e^{-\alpha\xi}}{\sqrt{\xi^2-\xi_1^2}}\,d\xi \qquad \text{(A37)}$$

The resulting potential $\bar{\varphi}$ is

$$\bar{\varphi}_{IV} = \frac{1}{\pi}\int_{0}^{\infty} dx' \int_{-b}^{\infty} \bar{W}(x',y',0)dy' \,\frac{1}{2\pi i}\int_{c-i\infty}^{c+i\infty} e^{\lambda(x-x')}d\lambda \int_{\xi_2}^{\infty} \frac{e^{-\alpha\xi}}{\sqrt{\xi^2-\xi_1^2}}\,d\xi$$

From the methods used before, it is found that

$$\bar{\varphi}_{IV} \neq 0 \qquad \text{only if} \quad x > \beta\sqrt{(b + y)^2 + z^2} \tag{A38}$$

that is, only inside a Mach cone with the vertex at the leading corner (-b, 0).

The boundary value of $\bar{\varphi}_{IV}$ in the plane of the wing has special properties between the Mach lines from the corner. On the wing, equation (A36) shows a cancellation of normal derivatives and in this area $\bar{W}_{IV} = 0$. Off the wing $\bar{\varphi}_I$ contributes no potential and $\bar{\varphi}_{IV} = -\bar{\varphi}_{III}$. Also $\bar{\varphi}_{IV}$ contributes nothing beyond the other edge of the wing if $x \leq \beta b$ (sketch (e)).

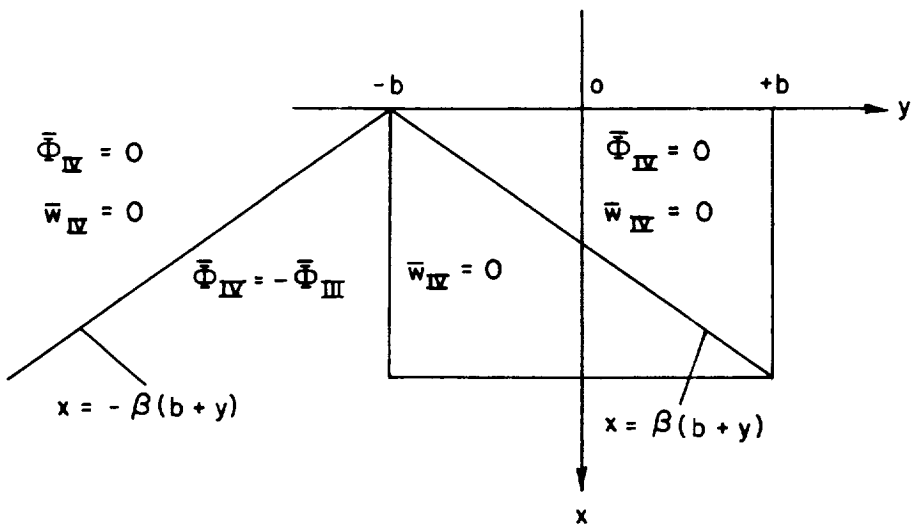

Sketch (e)

A corresponding difference solution $\bar{\psi}_V$ is defined for the edge $y = b$.

$$\bar{\psi}_V = \bar{\psi}_{II} - \bar{\psi}_{III}$$

$$= \frac{1}{\pi}\int_{-\infty}^{b} \bar{\psi}_z(y',0)dy' \int_b^{\infty} \sin\frac{\theta}{2}\,\frac{e^{-\alpha(R+\eta-y')}}{\sqrt{R}\,\sqrt{\eta - y'}}\,d\eta \tag{A39}$$

Then $\bar{\varphi}_V$ has the same behavior as $\bar{\varphi}_{IV}$ but in reversed directions about the edge $y = b$. If $\bar{\psi}_{III}$ is now reintroduced, this time defined with

$$\bar{\psi}_z(y,0) = 0 \qquad |y| > b \tag{A40}$$

the combined forms

$$\left.\begin{aligned} \bar{\psi} &= \bar{\psi}_{III} + \bar{\psi}_{IV} + \bar{\psi}_{V} \\ \text{or} \\ \bar{\varphi} &= \bar{\varphi}_{III} + \bar{\varphi}_{IV} + \bar{\varphi}_{V} \end{aligned}\right\} \qquad (A41)$$

yield a solution that satisfies all required boundary conditions for $x \leq 2\beta b$. If all terms of equation (A41) are defined with condition (A40) the form of (A41) is equivalent to

$$\left.\begin{aligned} \bar{\psi} &= -\bar{\psi}_{III} + \bar{\psi}_{I} + \bar{\psi}_{II} \\ \text{or} \\ \bar{\varphi} &= -\bar{\varphi}_{III} + \bar{\varphi}_{I} + \bar{\varphi}_{II} \end{aligned}\right\} \qquad (A42)$$

A426

It is seen by equation (A38) that the restrictions of condition (A40) are not necessary to calculations using equations (A37) and (A39) in (A41). This is sometimes a convenience in performing the required integrations.

In the following formulas the boundary value is taken for $z = 0$ as reached from the side of positive z. This is attained by putting θ of equation (A26) equal to 0 for results obtained from $\bar{\psi}_I$ and θ equal to π for results obtained from $\bar{\psi}_{II}$. It may be noted that solutions in terms of θ and R apply for a full circle of angle passing around the edge from wing surface to wing surface. The form of integral in equation (A31) is different in that is has correct sign for $z \geq 0$ only. From equation (A26)

$$R = y - \eta , \qquad \theta = 0$$

$$R = \eta - y , \qquad \theta = \pi$$

and the vanishing of some of the trigonometric functions puts limits on some of the intervals of integration. Then from equation (A30)

$$\bar{\psi}_I(y,0) = -\frac{1}{\pi}\int_{-b}^{y} \frac{e^{-\alpha(y-2\eta)}}{\sqrt{y-\eta}}\, d\eta \int_{\eta}^{\infty} \frac{e^{-\alpha y'}\bar{\psi}_z(y',0)}{\sqrt{y'-\eta}}\, dy' \qquad (A43)$$

from (A34)

$$\bar{\psi}_{II}(y,0) = -\frac{1}{\pi}\int_{y}^{b} \frac{e^{-\alpha(2\eta-y)}}{\sqrt{\eta-y}}\, d\eta \int_{-\infty}^{\eta} \frac{e^{\alpha y'}\bar{\psi}_z(y',0)}{\sqrt{\eta-y'}}\, dy' \qquad (A44)$$

and from these, two forms of $\bar{\psi}_{III}(y,0)$ are obtained by putting $b = \infty$.

If equations (A36) and (A39) are substituted and the limits of integration are combined

$$\bar{\psi}_{IV}(y,0) = \frac{1}{\pi}\int_{-\infty}^{\min(-b,y)} \frac{e^{-\alpha(y-2\eta)}}{\sqrt{y-\eta}}\,d\eta \int_{-b}^{\infty} \frac{e^{-\alpha y'}\bar{\psi}_z(y',0)}{\sqrt{y'-\eta}}\,dy' \tag{A45}$$

$$\bar{\psi}_{V}(y,0) = \frac{1}{\pi}\int_{\max(b,y)}^{\infty} \frac{e^{-\alpha(2\eta-y)}}{\sqrt{\eta-y}}\,d\eta \int_{-\infty}^{b} \frac{e^{\alpha y'}\psi_z(y',0)}{\sqrt{\eta-y'}}\,dy' \tag{A46}$$

If these results are used in equation (A41) and values on the wing are taken for $-b < y < b$,

$$\begin{aligned}\bar{\psi}(y,0) = &-\frac{1}{\pi}\int_{-\infty}^{y} \frac{e^{-\alpha(y-2\eta)}}{\sqrt{y-\eta}}\,d\eta \int_{\max(-b,\eta)}^{b} \frac{e^{-\alpha y'}\bar{\psi}_z(y',0)}{\sqrt{y'-\eta}}\,dy' \\ &+\frac{1}{\pi}\int_{-\infty}^{-b} \frac{e^{-\alpha(y-2\eta)}}{\sqrt{y-\eta}}\,d\eta \int_{-b}^{b \text{ or } \infty} \frac{e^{-\alpha y'}\bar{\psi}_z(y',0)}{\sqrt{y'-\eta}}\,dy' \\ &+\frac{1}{\pi}\int_{\max(b,y)}^{\infty} \frac{e^{-\alpha(2\eta-y)}}{\sqrt{\eta-y}}\,d\eta \int_{-\infty \text{ or } -b}^{b} \frac{e^{\alpha y'}\bar{\psi}_z(y',0)}{\sqrt{\eta-y'}}\,dy'\end{aligned} \tag{A47}$$

This is used as a computing form in appendix B. Since the last two integrals contribute only edge effects, the y' integrations can be extended to the infinite limits without affecting the results for $x < 2\beta b$. If the analytic form of the integrands is extended, simpler integrations may be obtained with infinite integrals. With condition (A40) and $\bar{\psi}_{III}$ from the third form of equation (A35) and again for $-b < y < b$, $\bar{\psi}$ becomes

$$\begin{aligned}\bar{\psi}(y,0) = &-\frac{1}{\pi}\int_{-b}^{b} \bar{\psi}_z(y',0)dy' \int_{1}^{\infty} \frac{e^{-\alpha|y-y'|\sigma}}{\sqrt{\sigma^2-1}}\,d\sigma \\ &+\frac{1}{\pi}\int_{-b}^{b} \bar{\psi}_z(y',0)dy' \int_{-\infty}^{-b} \frac{e^{-\alpha(y-\eta)}e^{-\alpha(y'-\eta)}}{\sqrt{y-\eta}\,\sqrt{y'-\eta}}\,d\eta \\ &+\frac{1}{\pi}\int_{-b}^{b} \bar{\psi}_z(y',0)dy' \int_{b}^{\infty} \frac{e^{-\alpha(\eta-y)}e^{-\alpha(\eta-y')}}{\sqrt{\eta-y}\,\sqrt{\eta-y'}}\,d\eta\end{aligned}$$

In this form the η integrations can be modified by substituting integral representations of the form

$$\frac{e^{-\alpha(y-\eta)}}{\sqrt{y-\eta}} = \sqrt{\frac{\alpha}{\pi}}\int_1^\infty \frac{e^{-\alpha(y-\eta)\sigma}}{\sqrt{\sigma-1}}\,d\sigma$$

Then the η integration can be performed and the remaining integrals give

$$\begin{aligned}\bar{\psi}(y,0) = &-\frac{1}{\pi}\int_{-b}^{b}\bar{\psi}_z(y',0)dy'\int_1^\infty \frac{e^{-\alpha|y-y'|\sigma}}{\sqrt{\sigma^2-1}}\,d\sigma \\ &+\frac{1}{\pi^2}\int_{-b}^{b}\bar{\psi}_z(y',0)dy'\int_1^\infty \frac{e^{-\alpha(b+y)\sigma}}{\sqrt{\sigma-1}}\,d\sigma\int_1^\infty \frac{e^{-\alpha(b+y')\xi}}{(\xi+\sigma)\sqrt{\xi-1}}\,d\xi \\ &+\frac{1}{\pi^2}\int_{-b}^{b}\bar{\psi}_z(y',0)dy'\int_1^\infty \frac{e^{-\alpha(b-y)\sigma}}{\sqrt{\sigma-1}}\,d\sigma\int_1^\infty \frac{e^{-\alpha(b-y')\xi}}{(\xi+\sigma)\sqrt{\xi-1}}\,d\xi\end{aligned} \tag{A48}$$

This is an alternate computing form that has been used to check the results from equation (A47).

The y integrations of the generalized lift can be computed in the forms given here. There remain the x and t integration to obtain $\bar{\psi}_z(y,0)$ and the Laplace inversions in x and t to find φ. The calculations for specific boundary values are given in appendix B.

APPENDIX B

INTEGRATIONS OF TRANSFORMED POTENTIAL FOR ARBITRARY TIME DEPENDENCE

To evaluate the dimensionless force coefficient Q_{mn}^{pq}, it is necessary to develop a form suitable for machine computation. Now, from equation (11) of the body of the report,

$$Q_{mn}^{pq} = \frac{1}{q_\infty S(W_o/V)} \int_0^{c_o} \left(\frac{x}{c_o}\right)^p \int_{-b}^{b} \left|\frac{y}{c_o}\right|^q 2\rho \left(\frac{\partial\varphi}{\partial t} + V\frac{\partial\varphi}{\partial x}\right) dy\, dx \tag{B1}$$

where φ is the velocity potential determined by an upwash

$$W(x,y,0,t) = W_o g(t) \left(\frac{x}{c_o}\right)^m \left|\frac{y}{c_o}\right|^n \tag{B2}$$

on a rectangular plan form of chord c_o and semispan b, and $\varphi = 0$ off the wing. (See sketch (f).)

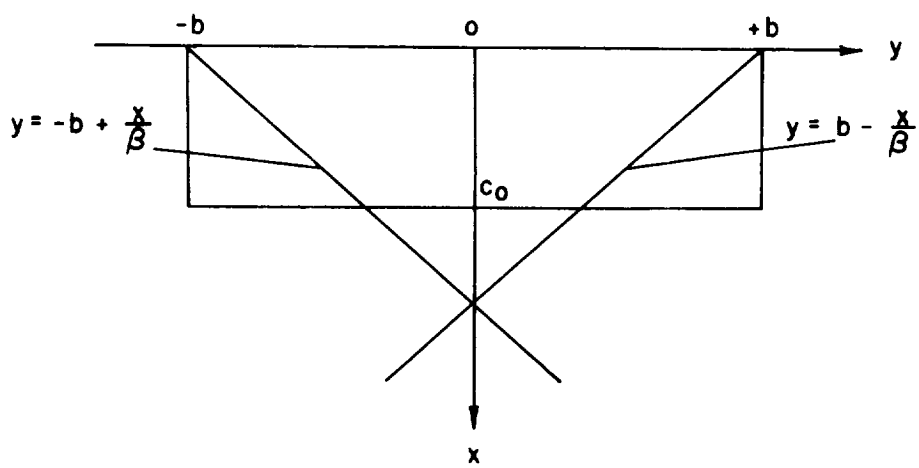

Sketch (f)

THE TRANSFORMED POTENTIAL

First, the transformed potential $\bar{\psi}(y,s,\lambda)$ is determined from equation (A47) where s and λ are the transform variables for t and x, respectively, and where z has been set equal to zero. Taking Laplace transforms on (B2) with respect to x and t gives

$$W_o \left(\frac{x}{c}\right)^m \left|\frac{y}{c_o}\right|^n \int_0^\infty e^{-st} g(t)dt = \bar{g}(s) W_o \left(\frac{x}{c_o}\right)^m \left|\frac{y}{c_o}\right|^n \tag{B3}$$

and

$$W_o \bar{g}(s) \left|\frac{y}{c_o}\right|^n \int_0^\infty e^{-\lambda x} \left(\frac{x}{c_o}\right)^m dx = \frac{\bar{g}(s) m! W_o}{c_o^m \lambda^{m+1}} \left|\frac{y}{c_o}\right|^m \tag{B4}$$

An integral form of the transformed potential $\bar{\psi}$ is obtained by substituting (B4) into equation (A47). A426

$$\bar{\psi} = \frac{\bar{g}(s) m! W_o}{\pi c_o^{m+n} \lambda^{m+1}} \left\{ \int_{-\infty}^{-b} \frac{e^{-\alpha(y-\eta)} d\eta}{\sqrt{y - \eta}} \int_{-b}^{\infty} \frac{|y'|^n e^{-\alpha(y'-\eta)} dy'}{\sqrt{y' - \eta}} \right.$$

$$+ \int_{b}^{\infty} \frac{e^{-\alpha(\eta-y)} d\eta}{\sqrt{\eta - y}} \int_{-\infty}^{b} \frac{|y'|^n e^{-\alpha(\eta-y')} dy'}{\sqrt{\eta - y'}}$$

$$- \int_{-b}^{y} \frac{e^{-\alpha(y-\eta)} d\eta}{\sqrt{y - \eta}} \int_{\eta}^{b} \frac{|y'|^n e^{-\alpha(y'-\eta)} dy'}{\sqrt{y' - \eta}}$$

$$\left. - \int_{-\infty}^{-b} \frac{e^{-\alpha(y-\eta)} d\eta}{\sqrt{y - \eta}} \int_{-b}^{b} \frac{|y'|^n e^{-\alpha(y'-\eta)} dy'}{\sqrt{y' - \eta}} \right\} \tag{B5}$$

SPANWISE INTEGRATIONS

The transformed potential $\bar{\psi}$ can now be reduced to a single integral by making the substitutions

$$\eta = y - \xi$$

$$y' = y + \xi(\sigma - 1)$$

and integrating over ξ.

Since the partial derivatives in (B1) do not involve y, and y is unaffected by the Laplace transforms on x and t, it is possible to multiply $\bar{\psi}$ by $\left|\frac{y}{c_o}\right|^q$ as in (B1) and perform the spanwise integrations on the transformed potential $\bar{\psi}$.

Now, $\int_{-b}^{b}\left|\frac{y}{c_o}\right|^q \bar{\psi}\, dy$ can be integrated by interchanging the order and integrating over y first. All of the preceding integrations are straightforward but very lengthy and, therefore, will not be reproduced in detail.

The results are:

$$\int_{-b}^{b}\left|\frac{y}{c_o}\right|^q \bar{\psi}\, dy = \frac{\bar{g}(s)m!W_o}{c_o^{m+n+q}\pi\lambda^{m+1}}\left(I_1 + I_2 + I_3 + I_4\right) \tag{B6}$$

$$I_1 = -2\int_0^\infty \frac{n!}{\alpha\sqrt{\sigma}\,(1+\sigma)}\sum_{j=0}^{n}\frac{b^{n-j+q+1}\left(\frac{\sigma-1}{\sigma+1}\right)^j d\sigma}{(n-j)!\alpha^j(n-j+q+1)}$$

$$= -\sqrt{\pi}\sum_{j=0}^{n}\frac{n!\,\Gamma\left(\frac{j}{2}+\frac{1}{2}\right)b^{n-j+q+1}[1+(-1)^j]}{(n-j)!\,\Gamma\left(\frac{j}{2}+1\right)(n-j+q+1)\alpha^{j+1}} \tag{B7}$$

$$I_2 = -2[1+(-1)^{n+1}]\int_0^1 \frac{n!q!\left(\frac{1-\sigma}{1+\sigma}\right)^{n+q+1} d\sigma}{\alpha^{n+q+2}\sqrt{\sigma}\,(1+\sigma)}$$

$$= \frac{\sqrt{\pi}\,n!q![1+(-1)^{n+1}]\Gamma\left(\frac{n+q}{2}+1\right)}{\alpha^{n+q+2}\Gamma\left(\frac{n+q}{2}+\frac{3}{2}\right)} \tag{B8}$$

$$I_3 = 2(-1)^{q+n}\int_0^\infty \frac{n!}{\alpha\sqrt{\sigma}\,(1+\sigma)}\sum_{j=0}^{n}\frac{\left(\frac{1-\sigma}{1+\sigma}\right)^j}{\alpha j\sigma^{n-j}}\sum_{h=0}^{n-j}\frac{[b(1-\sigma)]^{n-j-h}(q+h)!}{(n-j-h)!h!}\sum_{k=0}^{q+h}\frac{(-1)^{q+h-k}b^{q+h-k}\sigma^{k+1}d\sigma}{(q+h-k)![\alpha(1+\sigma)]^{k+1}} \tag{B9}$$

To perform the integrations I_3 may be rewritten. Replace $\frac{1}{[\alpha(1 + \sigma)]^{k+1}}$ by the equivalent integral $\int_0^\infty \frac{e^{-\alpha(1+\sigma)\tau}\tau^k \, d\tau}{k!}$. Then (B9) becomes

$$I_3 = 2(-1)^{q+n}\int_0^\infty\int_0^\infty \frac{e^{-\alpha(1+\sigma)\tau}n!(\sigma\tau - b)^q}{\alpha(1 + \sigma)} \sqrt{\sigma}\sum_{j=0}^{n} \frac{\left(\frac{1 - \sigma}{1 + \sigma}\right)^j(\tau - b)^{n-j}}{\alpha^j(n - j)!} \, d\tau \, d\sigma$$

$$= 2\int_0^\infty \frac{n!\sqrt{\sigma}}{\alpha(1 + \sigma)} \sum_{j=0}^{n} \frac{(-1)^j\left(\frac{1 - \sigma}{1 + \sigma}\right)^j}{\alpha^j} \sum_{k=0}^{q} \frac{q!b^{q-k}(-1)^k\sigma^k}{(q - k)!k!} \sum_{h=0}^{n-j} \frac{b^{n-j-h}(-1)^h(k + h)! \, d\sigma}{(n - j - h)!h![\alpha(1 + \alpha)]^{k+h+1}}$$

$$= 2\int_0^\infty \frac{n!\sqrt{\sigma}}{\alpha(1 + \sigma)} \sum_{k=0}^{q} \frac{q!b^{q-k}(-1)^k\sigma^k}{(q - k)!k!} \sum_{h=0}^{n} \frac{b^{n-h}(-1)^h}{(n - h)![\alpha(1 + \sigma)]^{h+k+1}} \sum_{j=0}^{h} \frac{(k + h - j)!(1 - \sigma)^j d\sigma}{(h - j)!} \tag{B10}$$

A426

Now

$$\frac{(k + h + 1)!}{j!(k + h - j)!}\int_0^1 t^j(1 - t)^{k+h-j}dt = 1 \tag{B11}$$

$$I_3 = 2\int_0^\infty \frac{n!\sqrt{\sigma}}{\alpha(1 + \sigma)} \sum_{k=0}^{q} \frac{q!b^{q-k}(-1)^k\sigma^k}{(q - k)!k!} \sum_{h=0}^{n} \frac{b^{n-h}(-1)^h(k + h + 1)!}{(n - h)!h![\alpha(1 + \sigma)]^{k+h+1}}\int_0^1(1 - t)^k(1 - \sigma t)^h dt \, d\sigma$$

$$= 2\sum_{k=0}^{q} \frac{q!b^{q-k}(-1)^k}{(q - k)!} \sum_{h=0}^{n} \frac{n!b^{n-h}(-1)^h}{(n - h)!\alpha^{h+k+2}} \sum_{j=0}^{h} \frac{(-1)^j\Gamma\left(j + k + \frac{3}{2}\right)\Gamma\left(h - j + \frac{1}{2}\right)}{(h - j)!(k + j + 1)!} \tag{B12}$$

$$I_4 = \int_0^\infty \sum_{h=0}^{n+q+1} \frac{e^{-\alpha b[1+g_h(\sigma)]}\gamma_h(\sigma)d\sigma}{\alpha^{h+1}} \tag{B13}$$

where $g_h(\sigma) \geq 0$ and $\gamma_h(\sigma)$ are integrable if $0 \leq \sigma \leq \infty$.

It will be shown that results from I_4 are zero for $x < \beta b$. Therefore, if the plan form is restricted so that $c_o < \beta b$, I_4 may be ignored and

$$\int_{-b}^{b}\left|\frac{y}{c_o}\right|^q\bar{\Psi}(y)dy = \frac{W_o\bar{g}(s)m!}{c_o^{m+n+q}\lambda^{m+1}}\left\{\frac{-1}{\sqrt{\pi}}\sum_{j=o}^{n}\frac{n!\Gamma\left(\frac{j}{2}+\frac{1}{2}\right)b^{n+q+1-j}[1+(-1)^j]}{(n-j)!\Gamma\left(\frac{j}{2}+1\right)(n+q+1-j)\alpha^{j+1}}\right.$$

$$+\frac{-n!q![1+(-1)^{n+1}]\Gamma\left(\frac{n+q}{2}+1\right)}{\sqrt{\pi}\,\alpha^{n+q+2}\Gamma\left(\frac{n+q}{2}+\frac{3}{2}\right)}$$

$$\left.+\frac{2}{\pi}\sum_{k=o}^{q}\frac{q!b^{q-k}(-1)^k}{(q-k)!}\sum_{h=o}^{n}\frac{n!b^{n-h}(-1)^h}{(n-h)!\alpha^{h+k+2}}\sum_{j=o}^{h}\frac{(-1)^j\Gamma\left(j+k+\frac{3}{2}\right)\Gamma\left(h-j+\frac{1}{2}\right)}{(h-j)!(k+j+1)!}\right\} \tag{B14}$$

x INVERSION

The next step is the x inversion of (B14). Note that the transform variable λ appears only in a finite sum of terms of the form

$$\frac{1}{\lambda^{m+1}\alpha^{\nu+1}}$$

$(\nu = 0, 1, 2, \ldots, n + q + 1)$

$$\alpha^2 = \beta^2\lambda^2 + \frac{2Ms\lambda}{a} + \frac{s^2}{a^2}$$

Therefore it is sufficient to consider only one such term.

Define

$$\bar{F}_\nu \equiv \frac{m!}{\lambda^{m+1}\alpha^{\nu+1}} \tag{B15}$$

Taking the x inversion, we have

$$\bar{f}_\nu(x) = \frac{1}{2\pi i}\int_L e^{\lambda x}\bar{F}_\nu d\lambda \tag{B16}$$

where L is the path of integration in the complex plane.

If the following convolution theorem for Laplace transforms is employed:

$$\int_0^t f(t - t')g(t')dt' = \frac{1}{2\pi i}\int_L e^{st}\bar{f}(s)\bar{g}(s)ds \tag{B17}$$

where $\bar{f}$ and $\bar{g}$ are the Laplace transforms of f and g, respectively; then (B16) becomes

$$\bar{f}_\nu(x) = \int_0^x (x - x')^m dx' \frac{1}{2\pi i}\int_L \frac{e^{\lambda x'}d\lambda}{\alpha^{\nu+1}}$$

A
4
2
6

From reference 12, page 239, no. 19,

$$\frac{1}{2\pi i}\int_L \frac{e^{\lambda x'}d\lambda}{\alpha^{\nu+1}} = \frac{\sqrt{\pi}}{\beta\Gamma\left(\frac{\nu}{2} + \frac{1}{2}\right)}\left(\frac{ax'}{2s}\right)^{\nu/2} e^{-Msx'/\beta^2 a} I_{\nu/2}\left(\frac{sx'}{\beta^2 a}\right), \qquad x' > 0$$

$$= 0, \qquad x' < 0 \tag{B18}$$

where $I_{\nu/2}(sx'/\beta^2 a)$ is the modified Bessel function of the first kind. Therefore,

$$\bar{f}_\nu(x) = \frac{\sqrt{\pi}}{\beta\Gamma\left(\frac{\nu}{2} + \frac{1}{2}\right)}\int_0^x (x - x')^m e^{-Msx'/\beta^2 a}\left(\frac{ax'}{2s}\right)^{\nu/2} I_{\nu/2}\left(\frac{sx'}{\beta^2 a}\right) dx' \tag{B19}$$

CHORDWISE INTEGRATIONS AND PARTIAL DERIVATIVES WITH RESPECT TO x

Replacing $m!/\lambda^{m+1}\alpha^{\nu+1}$ by $\bar{f}_\nu(x)$ in equation (B14) gives the weighted integrated potential which is still transformed with respect to time, that is,

$$\int_{-b}^{b}\left|\frac{y}{c_o}\right|^q \bar{\varphi}(x,y,s)dy$$

The partial derivatives with respect to x and the weighted chordwise integrations indicated in equation (B1) are done now. These operations may be performed on the $\bar{f}_\nu(x)$ of equation (B19) and the results substituted into equation (B14).

$$\int_0^{c_o}\left(\frac{x}{c_o}\right)^p \bar{f}_\nu(x)dx = \frac{\sqrt{\pi}}{\beta\Gamma\left(\frac{\nu}{2}+\frac{1}{2}\right)}\int_0^{c_o}\left(\frac{x}{c_o}\right)^p dx \int_0^x (x - x')^m e^{-Msx'/\beta^2 a}\left(\frac{ax'}{2s}\right)^{\nu/2} I_{\nu/2}\left(\frac{sx'}{\beta^2 a}\right) dx'$$

$$= \frac{\sqrt{\pi}}{c_o{}^p\beta\Gamma\left(\frac{\nu}{2}+\frac{1}{2}\right)}\int_0^{c_o} e^{-Msx'/\beta^2 a}\left(\frac{ax'}{2s}\right)^{\nu/2} I_{\nu/2}\left(\frac{sx'}{\beta^2 a}\right)\left[\sum_{l=0}^{m}\binom{m}{l}\frac{c_o{}^{m+p+1-l}(-1)^l x'^l}{(m+p+1-l)} + \frac{(-1)^{m+1}m!p!}{(m+p+1)!}x'^{m+p+1}\right]dx' \tag{B20}$$

Similarly,

$$\int_0^{c_o}\left(\frac{x}{c_o}\right)^p \frac{\partial}{\partial x}\bar{f}_\nu(x)dx = \frac{\sqrt{\pi}}{c_o{}^p\beta\Gamma\left(\frac{\nu}{2}+\frac{1}{2}\right)}\int_0^{c_o} e^{-Msx'/\beta^2 a}\left(\frac{ax'}{2s}\right)^{\nu/2} I_{\nu/2}\left(\frac{sx'}{\beta^2 a}\right)\left[m\sum_{l=0}^{m-1}\binom{m-1}{l}\frac{c_o{}^{m+p-l}(-1)^l x'^l}{(m+p-l)} + \frac{(-1)^m m!p!}{(m+p)!}x'^{m+p}\right]dx' \tag{B21}$$

By substitution of (B20) and (B21) into (B14)

$$\int_0^{c_o}\left(\frac{x}{c_o}\right)^p\int_{-b}^{b}\left|\frac{y}{c_o}\right|^q\bar{\varphi}(x,y,s)dy\ dx$$

$$= \frac{g(s)W_o}{\beta c_o^{m+n+p+q}}\left(-\sum_{j=o}^{n}\frac{n!b^{n+q+1-j}[1+(-1)^j]}{(n-j)!\Gamma\left(\frac{j}{2}+1\right)(n+q+1-j)}\right.$$

$$\left\{\int_0^{c_o}e^{-Msx'/\beta^2a}\left(\frac{ax'}{2s}\right)^{j/2}I_{j/2}\left(\frac{sx'}{\beta^2a}\right)\left[\sum_{l=o}^{m}\binom{m}{l}\frac{c_o^{m+p+1-l}(-1)^l x'^l}{(m+p+1-l)}+\frac{(-1)^{m+1}m!p!}{(m+p+1)!}x'^{m+p+1}\right]dx'\right\}$$

$$-\frac{n!q![1+(-1)^{n+1}]}{\Gamma\left(\frac{n+q}{2}+\frac{3}{2}\right)}\left\{\int_0^{c_o}e^{-Msx'/\beta^2a}\left(\frac{ax'}{2s}\right)^{(n+q+1)/2}I_{(n+q+1)/2}\left(\frac{sx'}{\beta^2a}\right)\left[\sum_{l=o}^{m}\binom{m}{l}\frac{c_o^{m+p+1-l}(-1)^l x'^l}{(m+p+1-l)}+\frac{(-1)^{n+1}m!p!}{(m+p+1)!}x'^{m+p+1}\right]dx'\right\}$$

$$+\frac{2}{\sqrt{\pi}}\sum_{k=o}^{q}\frac{q!b^{q-k}(-1)^k}{(q-k)!}\sum_{h=o}^{n}\frac{n!b^{n-h}(-1)^h}{(n-h)!\Gamma\left(\frac{k+h}{2}+1\right)}\sum_{j=o}^{h}\frac{(-1)^j\Gamma\left(j+k+\frac{3}{2}\right)\Gamma\left(h-j+\frac{1}{2}\right)}{(h-j)!(k+j+1)!}$$

$$\left.\left\{\int_0^{c_o}e^{-Msx'/\beta^2a}\left(\frac{ax'}{2s}\right)^{(h+k+1)/2}I_{(h+k+1)/2}\left(\frac{sx'}{\beta^2a}\right)\left[\sum_{l=o}^{m}\binom{m}{l}\frac{c_o^{m+p+1-l}(-1)^l x'^l}{(m+p+1-l)}+\frac{(-1)^{n+1}m!p!}{(m+p+1)!}x'^{m+p+1}\right]dx'\right\}\right) \tag{B22}$$

and

$$\int_0^{c_0}\left(\frac{x}{c_0}\right)^p\int_{-b}^{0}\left|\frac{y}{c_0}\right|^q \frac{\partial}{\partial x}\,\bar{\varphi}(x,y)dy\,dx$$

$$= \frac{\bar{g}(s)W_0}{\beta c_0^{m+n+p+q}}\left(-\sum_{j=0}^{n}\frac{n!b^{n+q+1-j}[1+(-1)^j]}{(n-j)!\Gamma\left(\frac{j}{2}+1\right)(n+q+1-j)}\right.$$

$$\left\{\int_0^{c_0}\left(\frac{ax'}{2s}\right)^{j/2}e^{-Msx'/\beta^2a}I_{j/2}\left(\frac{sx'}{\beta^2a}\right)\left[m\sum_{l=0}^{m-1}\binom{m-1}{l}\frac{c_0^{m+p-l}(-1)^l x'^l}{(m+p-l)}+\frac{(-1)^m m!p!}{(m+p)!}x'^{m+p}\right]dx'\right\}$$

$$-\frac{n!q![1+(-1)^{n+1}]}{\Gamma\left(\frac{n+q}{2}+\frac{3}{2}\right)}\left\{\int_0^{c_0}\left(\frac{ax'}{2s}\right)^{(n+q+1)/2}e^{-Msx'/\beta^2a}I_{(n+q+1)/2}\left(\frac{sx'}{\beta^2a}\right)\left[m\sum_{l=0}^{m-1}\binom{m-1}{l}\frac{c_0^{m+p-l}(-1)^l x'^l}{(m+p-l)}+\frac{(-1)^m m!p!}{(m+p)!}x'^{m+p}\right]dx'\right\}$$

$$+\frac{2}{\sqrt{\pi}}\sum_{k=0}^{q}\frac{q!b^{q-k}(-1)^k}{(q-k)!}\sum_{h=0}^{n}\frac{n!b^{n-h}(-1)^h}{(n-h)!\,\Gamma\left(\frac{k+h}{2}+1\right)}\sum_{j=0}^{h}\frac{(-1)^j\Gamma\left(j+k+\frac{3}{2}\right)\Gamma\left(h-j+\frac{1}{2}\right)}{(h-j)!(k+j+1)!}$$

$$\left.\left\{\int_0^{c_0}e^{-Msx'/\beta^2a}\left(\frac{ax'}{2s}\right)^{(h+k+1)/2}I_{(h+k+1)/2}\left(\frac{sx'}{\beta^2a}\right)\left[m\sum_{l=0}^{m-1}\binom{m-1}{l}\frac{c_0^{m+p-l}(-1)^l x'^l}{(m+p-l)}+\frac{(-1)^m m!p!}{(m+p)!}x'^{m+p}\right]dx'\right\}\right) \tag{B23}$$

Equations (B22) and (B23) represent the final results prior to specialization of the time dependence. All that remains is to prove that results from I_4 are zero in equation (B6) for the aspect ratios considered herein ($A > 2/\beta$).

VALIDITY OF PLAN-FORM RESTRICTION

To show that results from I_4 are zero for $x \leq \beta b$ (see sketch (f)), the x inversion of an arbitrary term of equation (B13) is considered. Define

$$\bar{G}_h = \frac{1}{2\pi i}\int_L \frac{m!e^{\lambda x}d\lambda}{\lambda^{m+1}}\int_0^\infty \frac{e^{-\alpha b(1+g_h)}\gamma_h(\sigma)d\sigma}{\alpha^{h+1}} \tag{B24}$$

$$\bar{G}_h = \frac{1}{\beta}\int_0^\infty \gamma_h(\sigma)d\sigma\int_0^x (x - x')^m e^{-Msx'/\beta^2 a}dx' \frac{1}{2\pi i}\int_{L'} \frac{e^{\lambda x'/\beta - \sqrt{\lambda^2-(s^2/\beta^2a^2)}\ b(1+g_h)}d\lambda'}{\left[\sqrt{\lambda'^2 - (s^2/\beta^2a^2)}\right]^{h+1}} \tag{B25}$$

A
4
2
6

Case a; $h \neq 0$

$$\bar{G}_h = \frac{1}{\beta}\int_0^\infty \gamma_h(\sigma)d\sigma\int_0^x (x - x')^m e^{-Msx'/\beta^2 a}dx' \int_0^{x'/\beta} I_0\left[s/\beta a\sqrt{(x'^2/\beta^2) - \mu^2}\right] f(u)du \tag{B26}$$

reference 12, page 228, no. 13, where

$$f(u) = \frac{1}{2\pi i}\int_L \frac{e^{\lambda'[u-b(1+g_h)]}d\lambda'}{\lambda'^h}$$

therefore

$$f(u) = \frac{[u - b(1 + g_h)]^{h-1}}{(h - 1)!} \qquad u \geq b(1 + g_h)$$

$$f(u) = 0 \qquad u \leq b(1 + g_h)$$

Therefore $\bar{G}_h = 0$ for $x'/\beta < b(1 + g_h)$ and therefore for all $x \leq \beta b(1 + g_h)$; hence for all $x \leq \beta b$ since $g_h \geq 0$.

Case b; $h = 0$

$$\bar{G}_0 = \frac{1}{\beta}\int_0^\infty \gamma_0(\sigma)d\sigma\int_{\beta b(1+g_0)}^x (x - x')^m e^{-Msx'/\beta^2 a} I_0\left[s/\beta a\sqrt{(x'^2/\beta^2 - b^2(1 + g_0)^2}\right]dx' \qquad \frac{x'}{\beta} > b(1 + g_0)$$

$$\overline{G}_o = 0 \quad \text{if} \quad \frac{x'}{\beta} < \frac{x}{\beta} \leq b(1 + g_o)$$

If the integrations preceding equation (B6) are carried out in detail, it will be noted that for n and q both even, $g_h \geq 1$. Therefore, when n and q are both even, equation (B14) is valid under the less limited restriction $c_o \leq 2b\beta$.

APPENDIX C

GENERALIZED FORCES FOR INDICIAL TIME DEPENDENCE

The formulas in the preceding section are for an arbitrary time dependence. In this section the specialization to an indicial time dependence is made. After the t inversion, a large part of the computations corresponds closely to reference 3, but it is included for completeness and because of the inclusion of absolute value signs on the odd spanwise modes.

A426

From equations (B22) and (B23) define

$$\bar{f}_\nu^{\,\mu} = \bar{g}(s)\int_0^{c_0} x'^{\mu} e^{-Msx'/\beta^2 a}\left(\frac{ax'}{2s}\right)^{\nu/2} I_{\nu/2}\left(\frac{sx'}{\beta^2 a}\right) dx' \tag{C1}$$

For indicial time dependence $\bar{g}(s) = 1/s$. Now, $f_\nu^{\,\mu}$ is the inverse of $\bar{f}_\nu^{\,\mu}$, that is,

$$f_\nu^{\,\mu} = \frac{1}{2\pi i}\int_L \frac{e^{st}}{s}\,ds\int_0^{c_0} x'^{\mu} e^{-Msx'/\beta^2 a}\left(\frac{ax'}{2s}\right)^{\nu/2} I_{\nu/2}\left(\frac{sx'}{\beta^2 a}\right) dx' \tag{C2}$$

and

$$\frac{\partial f_\nu^{\,\mu}}{\partial t} = \frac{1}{2\pi i}\int_L e^{st}ds\int_0^{c_0} x'^{\mu} e^{-Msx'/\beta^2 a}\left(\frac{ax'}{2s}\right)^{\nu/2} I_{\nu/2}\left(\frac{sx'}{\beta^2 a}\right) dx' \tag{C3}$$

Applying equation (B17) gives

$$f_\nu^{\,\mu} = \int_0^{c_0} x'^{\mu}dx'\int_0^{t} F(x',t')dt' \tag{C4}$$

where

$$F(x',t') = \frac{\left(\frac{1}{2}\right)^{\nu}\beta a}{\sqrt{\pi}\,\Gamma\left(\frac{\nu}{2}+\frac{1}{2}\right)}\left[at'(M+1) - x'\right]^{\nu/2-1/2}\left[x' - at'(M-1)\right]^{\nu/2-1/2}$$

for $at'(M - 1) < x' < at'(M + 1)$

$$F(x',t') = 0 \text{ elsewhere}$$

(ref. 12, p. 277, no. 5).

Now $at'(M - 1) < x' < at'(M + 1)$ implies

$$\frac{x'}{a(M + 1)} < t' < \frac{x'}{a(m - 1)}$$

and this gives three possible cases depending on t and c_o

Case 1:

$$t < \frac{c_o}{a(M + 1)}$$

Case 2:

$$\frac{c_o}{a(M + 1)} < t < \frac{c_o}{a(M - 1)}$$

Case 3:

$$\frac{c_o}{a(M - 1)} < t$$

The areas of integration of f_ν^μ are shown in sketch (g).

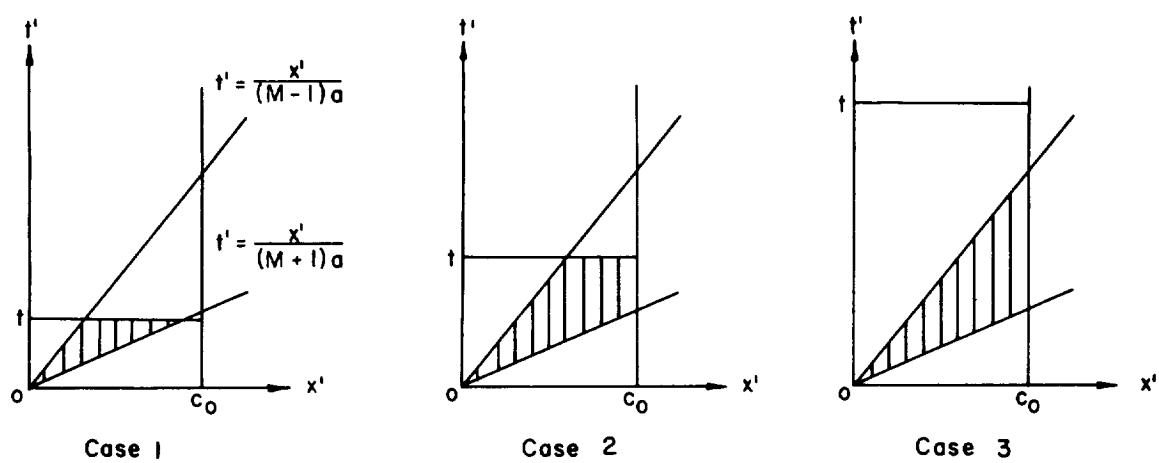

Sketch (g)

Case 1: $at(M + 1) < c_o$

$$f_\nu{}^\mu = \frac{\left(\frac{1}{2}\right)^\nu \beta a}{\sqrt{\pi}\,\Gamma\left(\frac{\nu}{2} + \frac{1}{2}\right)} \left\{ \int_o^{at(M-1)} x'^\mu dx' \int_{x'/a(M+1)}^{x'/a(M-1)} [at'(M + 1) - x']^{\nu/2-1/2} [x' - at'(M - 1)]^{\nu/2-1/2} dt' \right.$$

$$\left. + \int_{at(M-1)}^{at(M+1)} x'^\mu dx' \int_{x'/a(M+1)}^{t} [at'(M + 1) - x']^{\nu/2-1/2} [x' - at(M - 1]^{\nu/2-1/2} dt' \right\} \qquad (C5)$$

Letting $t' = (x'/\beta^2 a)(M - \cos\varphi)$ and interchanging orders of integration gives A426

$$f_\nu{}^\mu = \frac{\beta^{2\mu+\nu+2}(at)^{\mu+\nu+1}}{2^\nu \sqrt{\pi}(\mu + \nu + 1)\Gamma\left(\frac{\nu}{2} + \frac{1}{2}\right)} \int_o^\pi \frac{\sin^\nu\varphi\, d\varphi}{(M - \cos\varphi)^{\mu+\nu+1}} \qquad (C6)$$

Let

$$\cos\varphi = (1 - M\cos\theta)/(M - \cos\theta)$$

$$f_\nu{}^\mu = \frac{\beta(at)^{\mu+\nu+1}}{2^\nu \sqrt{\pi}\,(\mu + \nu + 1)\Gamma\left(\frac{\nu}{2} + \frac{1}{2}\right)} \int_o^\pi \sin^\nu\theta (M - \cos\theta)^\mu d\theta \qquad (C7)$$

Case 2: $at(M - 1) < c_o < at(M + 1)$

$$f_\nu{}^\mu = \frac{\left(\frac{1}{2}\right)^\nu \beta a}{\sqrt{\pi}\,\Gamma\left(\frac{\nu}{2} + \frac{1}{2}\right)} \left\{ \int_o^{at(M-1)} x'^\mu dx' \int_{x'/a(M+1)}^{x'/a(M-1)} [at'(M + 1) - x']^{\nu/2-1/2} [x' - at'(M - 1)]^{\nu/2-1/2} dt' \right.$$

$$\left. + \int_{at(M-1)}^{c_o} x'^\mu dx' \int_{x'/a(M+1)}^{t} [at'(M + 1) - x']^{\nu/2-1/2} [x' - at'(M - 1)]^{\nu/2-1/2} dt' \right\} \qquad (C8)$$

When the same substitutions are used as for case 1,

$$f_\nu{}^\mu = \frac{\beta(at)^{\mu+\nu+1}}{2^\nu\sqrt{\pi}\,(\mu+\nu+1)\Gamma\left(\frac{\nu}{2}+\frac{1}{2}\right)}\int_0^{\text{arc cos}[M-(c_o/at)]} \sin^\nu\theta(M-\cos\theta)^\mu d\theta$$

$$+\frac{c_o{}^{\mu+\nu+1}}{\sqrt{\pi}\,(\mu+\nu+1)\Gamma\left(\frac{\nu}{2}+\frac{1}{2}\right)(2\beta)^\nu}\int_0^{\text{arc cos}[M-(\beta^2at/c_o)]} \sin^\nu\theta\, d\theta \tag{C9}$$

A426

Case 3: $c_o < at(M-1)$

$$f_\nu{}^\mu = \frac{\left(\frac{1}{2}\right)^\nu \beta a}{\sqrt{\pi}\,\Gamma\left(\frac{\nu}{2}+\frac{1}{2}\right)}\int_0^{c_o} x'^\mu dx' \int_{x'/a(M+1)}^{x'/a(M-1)} [at'(M+1)-x']^{\nu/2-1/2}[x'-at'(M-1)]^{\nu/2-1/2}dt' \tag{C10}$$

$$f_\nu{}^\mu = \frac{c_o{}^{\mu+\nu+1}}{(2\beta)^\nu\sqrt{\pi}\,(\mu+\nu+1)\Gamma\left(\frac{\nu}{2}+\frac{1}{2}\right)}\int_0^\pi \sin^\nu\theta\, d\theta \tag{C11}$$

It is now convenient to introduce the following notations:

$$t_o = \frac{at}{c_o}$$

$$\theta_1 = \pi \qquad 0 \le t_o \le \frac{1}{M+1}$$

$$= \text{arc cos}\left(M - \frac{1}{t_o}\right) \qquad \frac{1}{M+1} \le t_o \le \frac{1}{M-1}$$

$$= 0 \qquad t_o \ge \frac{1}{M-1}$$

$$\theta_2 = 0 \qquad 0 \le t_o \le \frac{1}{M+1}$$

$$= \text{arc cos}(M - \beta^2 t_o) \qquad \frac{1}{M+1} \le t_o \le \frac{1}{M-1}$$

$$= \pi \qquad t_o \ge \frac{1}{M-1}$$

Then equations (C7), (C9), and (C11) may be written

$$f_\nu{}^\mu = \frac{c_o{}^{\mu+\nu+1}}{2^\nu \sqrt{\pi}\, \Gamma\left(\frac{\nu}{2} + \frac{1}{2}\right)(\mu + \nu + 1)} \left[\beta t_o{}^{\mu+\nu+1} \int_o^{\theta_1} \sin^\nu\theta (M - \cos\theta)^\mu d\theta \right.$$

$$\left. + \frac{1}{\beta^\nu} \int_o^{\theta_2} \sin^\nu\theta \, d\theta \right] \tag{C12}$$

In finding $\partial f_\nu{}^\mu/\partial t$ it is seen that

$$\frac{\partial f_\nu{}^\mu}{\partial t} = \frac{a}{c_o} \frac{\partial f_\nu{}^\mu}{\partial t_o}$$

$$\frac{\partial f_\nu{}^\mu}{\partial t} = \frac{a c_o{}^{\mu+\nu}}{2^\nu \sqrt{\pi}\, \Gamma\left(\frac{\nu}{2} + \frac{1}{2}\right)(\mu + \nu + 1)} \left[\beta(\mu + \nu + 1) t_o{}^{\mu+\nu} \int_o^{\theta_1} \sin^\nu\theta (M - \cos\theta)^\mu d\theta \right.$$

$$\left. + \beta t_o{}^{\mu+\nu+1} \sin^\nu\theta_1 (M - \cos\theta_1)^\mu \frac{\partial\theta_1}{\partial t_o} + \frac{1}{\beta^\nu} \sin^\nu\theta_2 \frac{\partial\theta_2}{\partial t_o} \right] \tag{C13}$$

The last two terms on the right-hand side cancel, and

$$\frac{\partial f_\nu{}^\mu}{\partial t} = \frac{\beta a c_o{}^{\mu+\nu} t_o{}^{\mu+\nu}}{2^\nu \sqrt{\pi}\, \Gamma\left(\frac{\nu}{2} + \frac{1}{2}\right)} \int_o^{\theta_1} \sin^\nu\theta (M - \cos\theta)^\mu d\theta \tag{C14}$$

Define

$$I_\nu{}^\mu \equiv \int_o^{\theta_1} \sin^\nu\theta (M - \cos\theta)^\mu d\theta \tag{C15}$$

$$\tilde{I}_\nu \equiv \int_o^{\theta_2} \sin^\nu\theta \, d\theta \tag{C16}$$

If $\bar{f}_\nu{}^\mu$ is replaced by the right-hand side of (C14) in equation (B22), then

$$\int_o^{c_o} \left(\frac{x}{c_o}\right)^p \int_{-b}^{b} \left|\frac{y}{c_o}\right|^q \frac{\partial\varphi(x,y,t)}{dt} dy\, dx$$

can be evaluated. Similarly, replacing $\bar{f}_\nu^{\,\mu}$ by the right-hand side of (C12) in (B23) yields an expression for

$$\int_0^{c_o} \left(\frac{x}{c_o}\right)^p \int_{-b}^{b} \left|\frac{y}{c_o}\right|^q \frac{\partial\varphi(x,y,t)}{\partial x}\, dy\, dx$$

If these expressions are substituted into equation (B1), using (C15) and (C16) and the time zones following equation (C11), the following formula for the induced force coefficient $Q_{mn}^{pq}(t_o)$ can be written

A426

$$\begin{aligned}
Q_{mn}^{pq}(t_o) = \frac{2}{\pi M}\Bigg\{ & -\sum_{j=o}^{n}\binom{n}{j}\frac{\left(\frac{A}{2}\right)^{n+q-j}[1+(-1)^j]}{(n+q+1-j)}\Bigg[\sum_{l=o}^{m}\binom{m}{l}\frac{t_o^{\,j+l}(-1)^l}{(m+p+1-l)}\, I_j^{\,l} \\
& + \frac{(-1)^{m+1}m!p!t_o^{\,m+p+1+j}}{(m+p+1)!}\, I_j^{\,m+p+1} + \frac{(-1)\,Mm!p!}{(m+p)!(m+p+j+1)}\left(\frac{1}{\beta^{j+1}}\,\tilde{I}_j + t_o^{\,m+p+j+1} I_j^{\,m+p}\right) \\
& + Mm\sum_{l=o}^{m-1}\binom{m-1}{l}\frac{(-1)^l}{(m+p-l)(j+l+1)}\left(\frac{1}{\beta^{j+1}}\,\tilde{I}_j + t_o^{\,j+l+1} I_j^{\,l}\right)\Bigg] \\
& - \frac{2n!q![1+(-1)^{n+1}]}{(n+q+1)!A}\Bigg[\sum_{l=o}^{m}\binom{m}{l}\frac{t_o^{\,n+q+1+l}}{(m+p+1-l)}\, I_{n+q+1}^{l} + \frac{(-1)^{m+1}m!p!t_o^{\,m+n+p+q+2}}{(m+p+1)!}\, I_{n+q+1}^{m+p+1} \\
& + \frac{(-1)^m Mm!p!}{(m+p)!(m+n+p+q+2)}\left(\frac{1}{\beta^{n+q+2}}\,\tilde{I}_{n+q+1} + t_o^{\,m+n+p+q+2}\, I_{n+q+1}^{m+p}\right) \\
& + Mm\sum_{l=o}^{m-1}\binom{m-1}{l}\frac{(-1)^l}{(m+p-l)(l+n+q+2)}\left(\frac{1}{\beta^{n+q+2}}\,\tilde{I}_{n+q+1} + t_o^{\,n+q+l+2}\, I_{n+q+1}^{l}\right)\Bigg] \\
& + \frac{2}{A}\sum_{k=o}^{q}\frac{q!\left(\frac{A}{2}\right)^{q-k}(-1)^k}{(q-k)!}\sum_{h=o}^{n}\frac{n!\left(\frac{A}{2}\right)^{n-h}(-1)^h}{(n-h)!\,\Gamma\left(\frac{k+h}{2}+1\right)^2}\sum_{j=o}^{h}\frac{(-1)^j\Gamma\left(j+k+\frac{3}{2}\right)\Gamma\left(h-j+\frac{1}{2}\right)}{2^{h+k}(h-j)!(k+j+1)!} \\
& \Bigg[\sum_{l=o}^{m}\binom{m}{l}\frac{t_o^{\,h+k+l+1}(-1)^l}{(m+p+1-l)}\, I_{h+k+1}^{l} + \frac{(-1)^{m+1}m!p!}{(m+p+1)!}\, t_o^{\,m+p+h+k+2}\, I_{h+k+1}^{m+p+1} \\
& + \frac{(-1)^m Mm!p!}{(m+p)!(m+p+h+k+2)}\left(\frac{1}{\beta^{h+k+2}}\,\tilde{I}_{h+k+1} + t_o^{\,h+k+m+p+2}\, I_{h+k+1}^{m+p}\right) \\
& + Mm\sum_{l=o}^{m=1}\binom{m-1}{l}\frac{(-1)^l}{(m+p-l)(l+h+k+2)}\left(\frac{1}{\beta^{h+k+2}}\,\tilde{I}_{h+k+1} + t_o^{\,h+k+l+2}\, I_{h+k+1}^{l}\right)\Bigg]\Bigg\}
\end{aligned} \tag{C17}$$

APPENDIX D

SINUSOIDAL TIME DEPENDENCE

From appendix C, equation (C1),

$$\bar{f}_\nu{}^\mu = \bar{g}(s) \int_0^{c_0} x'^\mu e^{-Msx'/\beta^2 a} \left(\frac{ax'}{2s}\right)^{\nu/2} I_{\nu/2}\left(\frac{sx'}{\beta^2 a}\right) dx' \tag{C1}$$

For sinusoidal time dependence

$$\bar{g}(s) = \frac{1}{s - i\omega} \tag{D1}$$

A426

As in appendix C, $f_\nu{}^\mu$ is the inverse of $\bar{f}_\nu{}^\mu$, that is,

$$f_\nu{}^\mu = \frac{1}{2\pi i} \int_L \frac{e^{st}}{s - i\omega} ds \int_0^{c_0} x'^\mu e^{-Msx'/\beta^2 a} \left(\frac{ax'}{2s}\right)^{\nu/2} I_{\nu/2}\left(\frac{sx'}{\beta^2 a}\right) dx'$$

$$= \int_0^{c_0} x'^\mu dx' \frac{1}{2\pi i} \int_L \frac{e^{st - (Msx'/\beta^2 a)}}{s - i\omega} \left(\frac{ax'}{2s}\right)^{\nu/2} I_{\nu/2}\left(\frac{sx'}{\beta^2 a}\right) ds \tag{D2}$$

where L is a line in the complex s plane parallel to the imaginary axis.

Now

$$I_{\nu/2}\left(\frac{sx'}{\beta^2 a}\right) = \frac{\left(\frac{sx'}{2\beta^2 a}\right)^{\nu/2}}{\sqrt{\pi}\, \Gamma\left(\frac{\nu}{2} + \frac{1}{2}\right)} \int_0^\pi \cosh\left(\frac{sx'}{\beta^2 a} \cos\theta\right) \sin^\nu\theta \, d\theta \tag{D3}$$

Substituting (D3) into (D2) and interchanging orders of integration gives

$$f_\nu{}^\mu = \int_0^{c_0} \frac{x'^\mu \left(\frac{x'}{2\beta}\right)^\nu}{\sqrt{\pi}\, \Gamma\left(\frac{\nu}{2} + \frac{1}{2}\right)} \int_0^{\pi/2} \sin^\nu\theta I_1 d\theta \, dx' \tag{D4}$$

$$I_1 = \frac{1}{2\pi i}\int_L \left[e^{s\left(t - \frac{Mx'}{\beta^2 a} + \frac{x'\cos\theta}{\beta^2 a}\right)} + e^{s\left(t - \frac{Mx'}{\beta^2 a} - \frac{x'\cos\theta}{\beta^2 a}\right)} \right] \frac{ds}{s - i\omega} \qquad \text{Re } s > 0 \tag{D5}$$

The integrand is regular in the complex s plane except for a simple pole at $s = i\omega$, as shown in sketch (h). If $t - \frac{Mx'}{\beta^2 a} + x' \frac{\cos\theta}{\beta^2 a}$ is always less than 0, the path can be closed to the right, and the integral will equal 0 since there are no singular points enclosed. If $t - \frac{Mx'}{\beta^2 a} - x' \frac{\cos\theta}{\beta^2 a}$ is always greater than 0, the path to the left can be chosen, as illustrated in sketch (h), and the value of I_1 will be the residue at $s = i\omega$. For other t, the evaluation of I_1 is more complicated. The concern is only with the steady-state sinusoidal case, or

$$t - \max\left(\frac{Mx'}{\beta^2 a} + \frac{x'\cos\theta}{\beta^2 a}\right) > 0$$

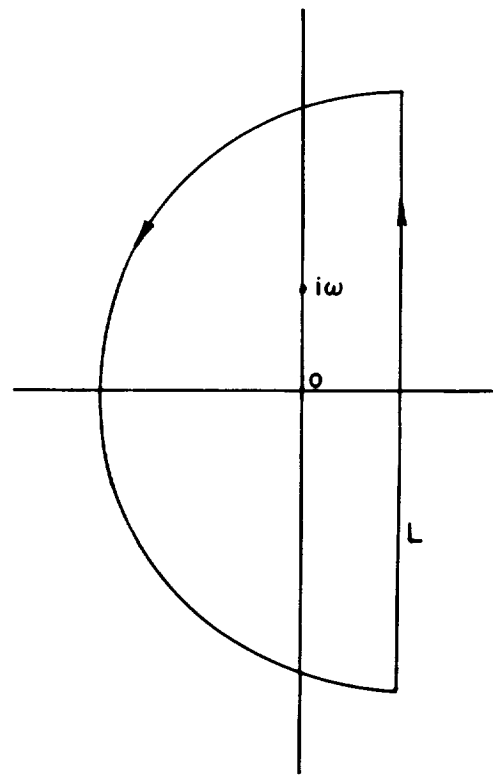

Sketch (h)

Now

$$\max\left(\frac{Mx'}{\beta^2 a} + \frac{x'\cos\theta}{\beta^2 a}\right) = \frac{c_o}{a(M - 1)}$$

Assume

$$t > \frac{c_o}{a(M - 1)}$$

Then

$$I_1 = 2e^{i\omega\left(t - \frac{Mx'}{\beta^2 a}\right)} \cos\left(\frac{\omega x'\cos\theta}{\beta^2 a}\right) \tag{D6}$$

$$f_\nu{}^\mu = \frac{2e^{i\omega t}}{\sqrt{\pi}\ \Gamma\left(\frac{\nu}{2} + \frac{1}{2}\right)} \int_0^{c_o} x'^\mu e^{-i\omega M x'/\beta^2 a} \left(\frac{x'}{2\beta}\right)^\nu dx' \int_0^{\pi/2} \cos\left(\frac{\omega x' \cos\theta}{\beta^2 a}\right) \sin^\nu\theta\, d\theta \tag{D7}$$

Now

$$J_{\nu/2}\left(\frac{\omega x'}{\beta^2 a}\right) = \frac{2\left(\frac{\omega x'}{\beta^2 a}\right)^{\nu/2}}{\sqrt{\pi}\ \Gamma\left(\frac{\nu}{2} + \frac{1}{2}\right)} \int_0^{\pi/2} \cos\left(\frac{x'\omega \cos\theta}{\beta^2 a}\right) \sin^\nu\theta\, d\theta \tag{D8}$$

A
4
2
6

for $\nu > -1$.

With the substitution of equation (D8) into (D7),

$$f_\nu{}^\mu = e^{i\omega t} \int_0^{c_o} x'^\mu e^{-i\omega M x'/\beta^2 a} \left(\frac{a x'}{2\omega}\right)^{\nu/2} J_{\nu/2}\left(\frac{\omega x'}{\beta^2 a}\right) dx' \tag{D9}$$

and

$$\frac{\partial f_\nu{}^\mu}{\partial t} = i\omega f_\nu{}^\mu \tag{D10}$$

Introduce the dimensionless frequency parameter $\overline{\omega}$, where $\overline{\omega} = \omega c_o/a$, and let $x' = c_o x$

$$f_\nu{}^\mu = c_o{}^{\mu+\nu+1} e^{i\omega t} \int_0^1 x^\mu e^{-i\overline{\omega} M x/\beta^2} \left(\frac{x}{2\overline{\omega}}\right)^{\nu/2} J_{\nu/2}\left(\frac{\overline{\omega} x}{\beta^2}\right) dx \tag{D11}$$

Define

$$I_{\nu/2}{}^\mu \equiv \int_0^1 x^\mu e^{-i\overline{\omega} M x/\beta^2} \left(\frac{x}{2\overline{\omega}}\right)^{\nu/2} J_{\nu/2}\left(\frac{\overline{\omega} x}{\beta^2}\right) dx \tag{D12}$$

For $\nu = 0$ this is the f_λ function of reference 13. If ν is even, the recurrence formulas for Bessel functions can reduce equation (D12) to f_λ integrals and similar integrals with the Bessel function of first order. If ν is odd, the Bessel function in equation (D12) can be expressed in trigonometric functions.

As in appendix C, $\bar{f}_\nu^{\ \mu}$ can be replaced by $f_\nu^{\ \mu}$, by means of equations (D11) and (D12), in equation (B23) and by $i\omega f_\nu^{\ \mu}$ in equation (B22), and the resulting expressions can be substituted into equation (B1). Then, with the amplitude defined by

$$\bar{Q}_{mn}^{pq}(\bar{\omega}) = Q_{mn}^{pq}\, e^{-i\omega t}$$

$$\begin{aligned}
\bar{Q}_{mn}^{pq}(\bar{\omega}) = \frac{2}{M\beta}\Bigg\{ & -\sum_{j=0}^{n} \frac{n!\left(\frac{A}{2}\right)^{n+q-j}}{(n-j)!\,\Gamma\left(\frac{j}{2}+1\right)} \frac{[1+(-1)^j]}{(n-j+q+1)} \Bigg[i\bar{\omega}\sum_{l=0}^{m}\binom{m}{l}\frac{(-1)^l}{(m+p+1-l)} I_{j/2}^{l} \\
& + mM\sum_{l=0}^{m-1}\binom{m-1}{l}\frac{(-1)^l}{(m+p-l)} I_{j/2}^{l} + \frac{(-1)^m m!\,p!}{(m+p)!}\left(MI_{j/2}^{m+p} - \frac{i\bar{\omega}}{m+p+1} I_{j/2}^{m+p+1}\right)\Bigg] \\
& - \frac{2n!\,q![1+(-1)^{n+1}]}{A\Gamma\left(\frac{n+q}{2}+\frac{3}{2}\right)} \Bigg[i\bar{\omega}\sum_{l=0}^{m}\binom{m}{l}\frac{(-1)^l}{(m+p+1-l)} I_{n+q+1}^{l} \\
& + mM\sum_{l=0}^{m-1}\binom{m-1}{l}\frac{(-1)^l}{(m+p-l)} I_{(n+q+1)/2}^{l} + \frac{(-1)^m m!\,p!}{(m+p)!}\left(MI_{(n+q+1)/2}^{m+p} - \frac{i\bar{\omega}}{m+p+1} I_{(n+q+1)/2}^{m+p+1}\right)\Bigg] \\
& + \frac{4}{A\sqrt{\pi}}\sum_{k=0}^{q}\frac{q!\left(\frac{A}{2}\right)^{q-k}(-1)^k}{(q-k)!}\sum_{h=0}^{n}\frac{n!\left(\frac{A}{2}\right)^{n-h}(-1)^h}{(n-h)!\,\Gamma\left(\frac{k+h}{2}+1\right)}\sum_{j=0}^{h}\frac{(-1)^j\Gamma\left(j+k+\frac{3}{2}\right)\Gamma\left(h-j+\frac{1}{2}\right)}{(h-j)!\,(k+j+1)!} \\
& \Bigg[i\bar{\omega}\sum_{l=0}^{m}\binom{m}{l}\frac{(-1)^l}{(m+p+1-l)} I_{(h+k+1)/2}^{l} + mM\sum_{l=0}^{m-1}\binom{m-1}{l}\frac{(-1)^l}{(m+p-l)} I_{(h+k+1)/2}^{l} \\
& + \frac{(-1)^m m!\,p!}{(m+p)!}\left(MI_{(h+k+1)/2}^{m+p} - \frac{i\bar{\omega}}{m+p-1} I_{(h+k+1)/2}^{m+p+1}\right)\Bigg]\Bigg\}
\end{aligned} \tag{D13}$$

For the case $\bar{\omega} = 0$, $\bar{Q}_{mn}^{pq}(\bar{\omega})$ reduces to the steady-state result.

$$\begin{aligned}
\lim_{\bar{\omega}\to 0} I_{\nu/2}^{\ \mu} &= \lim_{\bar{\omega}\to 0}\int_0^1 x^\mu e^{-i\bar{\omega}Mx/\beta^2}\left(\frac{x}{2\bar{\omega}}\right)^{\nu/2} J_{\nu/2}\left(\frac{\bar{\omega}x}{\beta^2}\right) dx \\
&= \int_0^1 \frac{x^\mu\left(\frac{x}{2\beta}\right)^\nu dx}{\Gamma\left(\frac{\nu}{2}+1\right)} = \frac{1}{(2\beta)^\nu\,\Gamma\left(\frac{\nu}{2}+1\right)(\mu+\nu+1)}
\end{aligned} \tag{D14}$$

and

$$\bar{Q}_{mn}^{pq}[\bar{\omega}=o] = \frac{2}{M\beta}\left\{ - \sum_{j=o}^{n} \frac{n!\left(\frac{A}{2}\right)^{n+q-j}[1+(-1)^j]}{(n-j)!\Gamma\left(\frac{j}{2}+1\right)(n-j+q+1)} \left[mM \sum_{l=o}^{m-1} \frac{\binom{m-1}{l}(-1)^l}{(m+p-l)(2\beta)^j\Gamma\left(\frac{j}{2}+1\right)(j+l+1)} \right.\right.$$

$$\left. + \frac{(-1)^m m!p!M}{(m+p)!(2\beta)^j\Gamma\left(\frac{j}{2}+1\right)(m+p+j+1)} \right] - \frac{2n!q![1+(-1)^{n+1}]}{A\Gamma\left(\frac{n+q}{2}+\frac{3}{2}\right)} \left[mM \sum_{l=o}^{m-1} \frac{\binom{m-1}{l}(-1)^l}{(m+p-l)(2\beta)^{n+q+1}(n+q+l+2)\Gamma\left(\frac{n+q}{2}+\frac{3}{2}\right)} \right.$$

$$\left. + \frac{(-1)^m Mm!p!}{(m+p)!(2\beta)^{n+q+1}(n+q+m+p+2)\Gamma\left(\frac{n+q}{2}+\frac{3}{2}\right)} \right]$$

$$+ \frac{4}{A\sqrt{\pi}} \sum_{k=o}^{q} \frac{q!\left(\frac{A}{2}\right)^{q-k}(-1)^k}{(q-k)!} \sum_{h=o}^{n} \frac{n!\left(\frac{A}{2}\right)^{n-h}(-1)^h}{(n-h)!\Gamma\left(\frac{k+h}{2}+1\right)} \sum_{j=o}^{h} \frac{(-1)^j\Gamma\left(j+k+\frac{3}{2}\right)\Gamma\left(h-j+\frac{1}{2}\right)}{(h-j)!(k+j+1)!}$$

$$\left.\left[mM \sum_{l=o}^{m-1} \frac{\binom{m-1}{l}(-1)^l}{(m+p-l)(2\beta)^{h+k+1}\Gamma\left(\frac{h+k}{2}+\frac{3}{2}\right)(l+h+k+2)} + \frac{(-1)^m m!p!M}{(m+p)!(2\beta)^{h+k+1}\Gamma\left(\frac{h+k}{2}+\frac{3}{2}\right)(m+p+h+k+2)} \right]\right\} \tag{D15}$$

Another specialization of interest is the limit case of $Q_{mn}^{pq}(\bar{\omega})$ for infinite frequency. It is necessary to obtain $\lim_{\bar{\omega}\to\infty} I_{\nu/2}{}^{\mu}$ and $\lim_{\bar{\omega}\to\infty} i\bar{\omega}I_{\nu/2}{}^{\mu}$.

$$\lim_{\bar{\omega}\to\infty} I_{\nu/2}{}^{\mu} = \lim_{\bar{\omega}\to\infty} \int_0^{\bar{\omega}} \frac{1}{\bar{\omega}^{\mu+\nu+1}} \xi^{\mu} e^{-iM\xi/\beta^2} \left(\frac{\xi}{2}\right)^{\nu/2} J_{\nu/2}\left(\frac{\xi}{\beta^2}\right) d\xi \tag{D16}$$

where μ and ν are 0 or positive integers.

Noting that

$$\left| e^{-iM\xi/\beta^2} \right| \leq 1 \; ; \qquad \left| J_{\nu/2}\left(\frac{\xi}{\beta^2}\right) \right| \leq 1$$

define

$$I'^{\mu}_{\nu/2} \equiv \int_0^{\bar{\omega}} \frac{1}{\bar{\omega}^{\mu+\nu+1}} \xi^{\mu+(\nu/2)} d\xi = \frac{1}{\bar{\omega}^{\nu/2}\left(\mu + \frac{\nu}{2} + 1\right)} \tag{D17}$$

Now

$$I^{\mu}_{\nu/2} \leq I'^{\mu}_{\nu/2} = \frac{1}{\bar{\omega}^{\nu/2}\left(\mu + \frac{\nu}{2} + 1\right)} \tag{D18}$$

Therefore

$$\lim_{\bar{\omega}\to\infty} I^{\mu}_{\nu/2} \leq \lim_{\bar{\omega}\to\infty} I'^{\mu}_{\nu/2} = 0 \qquad \text{for} \quad \frac{\nu}{2} > 0 \tag{D19}$$

and

$$\lim_{\bar{\omega}\to\infty} i\bar{\omega} I^{\mu}_{\nu/2} = 0 \qquad \text{for} \quad \frac{\nu}{2} > 1 \tag{D20}$$

Assuming $\mu \neq 0$ and using the relationship

$$\xi^{(\nu/2)+1} J_{\nu/2}\left(\frac{\xi}{\beta^2}\right) = \beta^2 \frac{d}{d\xi}\left[\xi^{(\nu/2)+1} J_{(\nu/2)+1}\left(\frac{\xi}{\beta^2}\right)\right]$$

$$I^{\mu}_{\nu/2} = \frac{\beta^2}{2^{\nu/2}\bar{\omega}^{\mu+\nu+1}} \int_0^{\bar{\omega}} \xi^{\mu-1} e^{-iM\xi/\beta^2} \frac{d}{d\xi}\left[\xi^{(\nu/2)+1} J_{(\nu/2)+1}\left(\frac{\xi}{\beta^2}\right)\right] d\xi$$

Integration by parts yields

$$I^{\mu}_{\nu/2} = \frac{\beta^2}{2^{\nu/2}\bar{\omega}^{(\nu/2)+1}} e^{-iM\bar{\omega}/\beta^2} J_{(\nu/2)+1}\left(\frac{\bar{\omega}}{\beta^2}\right) + 2iMI^{\mu-1}_{(\nu/2)+1}$$

$$- \frac{2\beta^2(\mu - 1)}{\bar{\omega}} I^{\mu-2}_{(\nu/2)+1} \tag{D21}$$

Using equations (D19) and (D20) on the right-hand side of (D21) yields

$$\lim_{\bar{\omega}\to\infty} I^{\mu}_{\nu/2} = 0 \qquad \text{for} \quad \frac{\nu}{2} > -1 \ , \qquad \mu \neq 0 \tag{D22}$$

$$\lim_{\bar{\omega}\to\infty} i\bar{\omega} I^{\mu}_{\nu/2} = 0 \qquad \text{for} \quad \frac{\nu}{2} > 0 \ , \qquad \mu \neq 0 \tag{D23}$$

For $\mu > 1$, the process can be repeated on $2iMI^{\mu-1}_{(\nu/2)+1}$ giving

$$\lim_{\bar{\omega}\to\infty} i\bar{\omega} I^{\mu}_{\nu/2} = 0 \qquad \text{for} \quad \frac{\nu}{2} > -1 \ , \qquad \mu \neq 0,1 \tag{D24}$$

Therefore, as $\bar{\omega} \to \infty$ all terms drop out, except possibly those containing $I_o^{\,o}$, $i\bar{\omega}I_o^{\,o}$, $i\bar{\omega}I_o^{\,1}$, $i\bar{\omega}I_{1/2}^{o}$, and $i\bar{\omega}I^{o}$.

$i\bar{\omega}I_1^{\,o}$

$$i\bar{\omega}I_1^{\,o} = i\bar{\omega}\int_0^1 e^{-i\bar{\omega}Mx/\beta^2}\left(\frac{x}{2\bar{\omega}}\right) J_1\left(\frac{\bar{\omega}x}{\beta^2}\right) dx$$

$$= -i\beta^2\int_0^1 e^{-i\bar{\omega}Mx/\beta^2}\left(\frac{x}{2\bar{\omega}}\right)\frac{d}{dx} J_o\left(\frac{\bar{\omega}x}{\beta^2}\right) dx$$

A426

Integration by parts gives:

$$i\bar{\omega}I_1^{\,o} = -\frac{i\beta^2}{2\bar{\omega}} e^{-i\bar{\omega}M/\beta^2} J_o\left(\frac{\bar{\omega}}{\beta^2}\right) + \frac{M}{2} I_o^{\,1} + \frac{i\beta^2}{2\bar{\omega}} I_o^{o} \tag{D25}$$

From equation (D18)

$$\frac{1}{\bar{\omega}} I_o^{\,o} \leq \frac{1}{\bar{\omega}}$$

Therefore

$$\lim_{\bar{\omega}\to\infty} i\bar{\omega}I_1^{\,o} = 0 \tag{D26}$$

$i\bar{\omega}I_{1/2}^{o}$

By means of the relationship

$$J_{1/2}(z) = \sqrt{\frac{2}{\pi z}}\sin z$$

$i\bar{\omega}I_{1/2}^{o}$ can be integrated immediately

$$i\bar{\omega}I_{1/2}^{o} = \frac{i\beta}{2\bar{\omega}\sqrt{\pi}}\left(M + 1\right)e^{-i\bar{\omega}/(M+1)} - \left(M - 1\right)e^{-i\bar{\omega}/(M-1)} - 2 \tag{D27}$$

and therefore

$$\lim_{\bar{\omega}\to\infty} i\bar{\omega}I_{1/2} = 0 \tag{D28}$$

$i\bar{\omega}I_o^{\,1}$

From equation (D21)

$$i\bar{\omega}I_o^{\,1} = i\beta^2 e^{-iM\bar{\omega}/\beta^2} J_1\left(\frac{\bar{\omega}}{\beta^2}\right) - 2M\bar{\omega}I_1^{\,o} \tag{D29}$$

Therefore, by equation (D26)

$$\lim_{\overline{\omega}\to\infty} i\overline{\omega}I_o' = 0 \tag{D30}$$

$I_o^{\,o}$

$$I_o^{\,o} = \frac{1}{\overline{\omega}}\int_0^{\overline{\omega}} e^{-iM\xi/\beta^2} J_o\left(\frac{\xi}{\beta^2}\right) d\xi$$

Now, $\int_0^{\infty} e^{-iM\xi/\beta^2} J_o\left(\frac{\xi}{\beta^2}\right) d\xi$ is the Fourier transform of $J_o\left(\frac{\xi}{\beta^2}\right)$.

Since the transform exists,

$$\lim_{\overline{\omega}\to\infty} I_o^{\,o} = 0 \tag{D31}$$

$i\overline{\omega}I_o^{\,o}$

$$\lim_{\overline{\omega}\to\infty} i\overline{\omega}I_o^{\,o} = i\int_0^{\infty} \cos\frac{M\xi}{\beta^2} J_o\left(\frac{\xi}{\beta^2}\right) d\xi + \int_0^{\infty} \sin\frac{M\xi}{\beta^2} J_o\left(\frac{\xi}{\beta^2}\right) d\xi$$

From reference 10 the first integral equals 0 and

$$\lim_{\overline{\omega}\to\infty} i\overline{\omega}I_o^{\,o} = \int_0^{\infty} \sin\frac{M\xi}{\beta^2} J_o\left(\frac{\xi}{\beta^2}\right) d\xi = \beta \tag{D32}$$

Therefore, all terms drop out in equation (D13) except those containing $i\overline{\omega}I_o^{\,o}$ and

$$\overline{Q}_{mn}^{pq}[\overline{\omega} = \infty] = \frac{-4\left(\frac{A}{2}\right)^{n+q}}{M(n + q + 1)(m + p + 1)} \tag{D33}$$

REFERENCES

1. Miles, John W.: The Oscillating Rectangular Airfoil at Supersonic Speeds. Quart. Appl. Math., vol. 9, no. 1, Apr. 1951, pp. 47-65. (Also pub. as: NAVORD Rep. 1170 (NOTS 226), July 21, 1949, and NAVORD Tech. Memo. RRB-15, June 1, 1949.)

2. Miles, John W.: A General Solution for the Rectangular Airfoil in Supersonic Flow. Quart. Appl. Math., vol. 11, no. 1, Apr. 1953, pp. 1-8.

3. Lomax, Harvard, Fuller, Franklyn B., and Sluder, Loma: Generalized Indicial Forces on Deforming Rectangular Wings in Supersonic Flight. NACA Rep. 1230, 1955. (Supersedes NACA TN 3286)

4. Lomax, Harvard, Heaslet, Max. A., Fuller, Franklyn B., and Sluder, Loma: Two- and Three-Dimensional Unsteady Lift Problems in High-Speed Flight. NACA Rep. 1077, 1952. (Supersedes NACA TN's 2403, 2387, and 2256)

5. Miles, John W.: The Potential Theory of Unsteady Supersonic Flow. Cambridge Univ. Press, 1959.

6. Van de Vooren, A. I.: Unsteady Airfoil Theory. Advances in Applied Mechanics, vol. V. Academic Press Inc., New York, 1958, pp. 35-89.

7. Drischler, Joseph A.: Calculation and Compilation of the Unsteady-Lift Functions for a Rigid Wing Subjected to Sinusoidal Gusts and to Sinusoidal Sinking Oscillations. NACA TN 3748, 1956.

8. Nelson, Herbert C., Rainey, Ruby A., and Watkins, Charles E.: Lift and Moment Coefficients Expanded to the Seventh Power of Frequency for Oscillating Rectangular Wings in Supersonic Flow and Applied to a Specific Flutter Problem. NACA TN 3076, 1954.

9. Lessing, Henry C., Troutman, John L., and Menees, Gene P.: Experimental Determination of the Pressure Distribution on a Rectangular Wing Oscillating in the First Bending Mode for Mach Numbers From 0.24 to 1.30. NASA TN D-344, 1960.

10. Watson, G. N.: A Treatise on the Theory of Bessel Functions. Second ed., Cambridge Univ. Press, 1944.

11. Landahl, M. T.: Theoretical Studies of Unsteady Transonic Flow. Part II. The Oscillating Semi-Infinite Rectangular Wing. Aero. Res. Inst. of Sweden, Rep. 78, July 1958.

12. Erdelyi, A.: Tables of Integral Transforms. Vol. I. McGraw-Hill Book Co., New York, 1954.

13. Huckel, Vera: Tabulation of the f_λ Functions Which Occur in the Aerodynamic Theory of Oscillating Wings in Supersonic Flow. NACA TN 3606, 1958.

A
4
2
6

TABLE I.- GENERALIZED INDICIAL FORCE, $Q_{mn}^{pq}(t_o)$, FOR M=1.2, A=4

n=0, q=0

t_o	p	m=0	m=1	m=2	p	m=0	m=1	m=2	p	m=0	m=1	m=2
0.	0	-3.333	-1.667	-1.111	1	-1.667	-1.111	-0.8333	2	-1.111	-0.8333	-0.6667
.04545		-3.296	-1.650	-1.103		-1.646	-1.099	-.8262		-1.098	-.8242	-.6607
.09091		-3.262	-1.640	-1.102		-1.622	-1.088	-.8237		-1.085	-.8158	-.6580
.1364		-3.229	-1.634	-1.109		-1.595	-1.080	-.8255		-1.070	-.8083	-.6583
.1818		-3.198	-1.633	-1.121		-1.565	-1.073	-.8312		-1.053	-.8017	-.6615
.2273		-3.170	-1.637	-1.137		-1.533	-1.068	-.8405		-1.033	-.7964	-.6674
.2727		-3.143	-1.645	-1.158		-1.498	-1.066	-.8528		-1.010	-.7926	-.6757
.3182		-3.119	-1.658	-1.181		-1.461	-1.068	-.8676		-.9836	-.7906	-.6861
.3636		-3.096	-1.675	-1.206		-1.421	-1.072	-.8843		-.9525	-.7909	-.6983
.4091		-3.076	-1.696	-1.233		-1.380	-1.080	-.9023		-.9166	-.7939	-.7117
.4545		-3.059	-1.721	-1.259		-1.337	-1.091	-.9210		-.8754	-.8000	-.7258
.6818		-3.156	-1.862	-1.381		-1.295	-1.171	-1.009		-.8147	-.8526	-.7941
.9091		-3.316	-1.990	-1.479		-1.327	-1.250	-1.081		-.8156	-.9083	-.8513
1.136		-3.476	-2.099	-1.555		-1.377	-1.321	-1.140		-.8330	-.9594	-.8980
1.364		-3.626	-2.192	-1.616		-1.434	-1.384	-1.187		-.8578	-1.005	-.9361
1.591		-3.765	-2.271	-1.664		-1.494	-1.439	-1.225		-.8869	-1.046	-.9672
1.818		-3.893	-2.338	-1.702		-1.555	-1.487	-1.255		-.9189	-1.083	-.9926
2.045		-4.011	-2.395	-1.732		-1.616	-1.529	-1.280		-.9531	-1.115	-1.013
2.273		-4.120	-2.443	-1.756		-1.677	-1.565	-1.300		-.9891	-1.144	-1.030
2.500		-4.221	-2.484	-1.774		-1.737	-1.597	-1.315		-1.027	-1.169	-1.043
2.727		-4.315	-2.519	-1.788		-1.796	-1.625	-1.327		-1.066	-1.192	-1.053
2.955		-4.402	-2.547	-1.799		-1.855	-1.648	-1.336		-1.106	-1.211	-1.062
3.182		-4.482	-2.571	-1.806		-1.912	-1.668	-1.343		-1.147	-1.228	-1.068
3.409		-4.557	-2.590	-1.812		-1.967	-1.684	-1.348		-1.189	-1.242	-1.072
3.636		-4.626	-2.605	-1.816		-2.021	-1.697	-1.351		-1.232	-1.254	-1.075
3.864		-4.689	-2.616	-1.818		-2.072	-1.707	-1.354		-1.274	-1.263	-1.077
4.091		-4.746	-2.625	-1.819		-2.121	-1.715	-1.355		-1.315	-1.270	-1.079
4.318		-4.796	-2.631	-1.820		-2.165	-1.721	-1.356		-1.355	-1.275	-1.079
4.545		-4.840	-2.634	-1.821		-2.205	-1.724	-1.356		-1.392	-1.278	-1.080
4.773		-4.874	-2.636	-1.821		-2.238	-1.726	-1.356		-1.423	-1.280	-1.080
5.000		-4.895	-2.637	-1.821		-2.258	-1.726	-1.356		-1.442	-1.281	-1.080

n=0, q=1 or n=1, q=0

t_o	p	m=0	m=1	m=2	p	m=0	m=1	m=2	p	m=0	m=1	m=2
0.	0	-3.333	-1.667	-1.111	1	-1.667	-1.111	-0.8333	2	-1.111	-0.8333	-0.6667
.04545		-3.260	-1.633	-1.091		-1.627	-1.087	-.8176		-1.586	-.8152	-.6538
.09091		-3.192	-1.607	-1.081		-1.586	-1.066	-.8078		-1.061	-.7988	-.6452
.1364		-3.130	-1.588	-1.080		-1.542	-1.048	-.8035		-1.034	-.7842	-.6405
.1818		-3.072	-1.576	-1.085		-1.497	-1.033	-.8041		-1.006	-.7714	-.6396
.2273		-3.019	-1.570	-1.096		-1.450	-1.021	-.8090		-.9765	-.7606	-.6418
.2727		-2.971	-1.569	-1.112		-1.402	-1.014	-.8174		-.9442	-.7520	-.6470
.3182		-2.928	-1.575	-1.130		-1.353	-1.009	-.8287		-.9090	-.7459	-.6546
.3636		-2.889	-1.585	-1.151		-1.304	-1.009	-.8422		-.8708	-.7426	-.6641
.4091		-2.854	-1.599	-1.174		-1.255	-1.013	-.8571		-.8290	-.7423	-.6751
.4545		-2.823	-1.618	-1.197		-1.205	-1.020	-.8729		-.7836	-.7454	-.6869
.6818		-2.868	-1.732	-1.302		-1.136	-1.081	-.9478		-.7060	-.7841	-.7446
.9091		-2.979	-1.837	-1.385		-1.143	-1.144	-1.009		-.6909	-.8273	-.7929
1.136		-3.095	-1.926	-1.451		-1.169	-1.201	-1.059		-.6934	-.8675	-.8322
1.364		-3.206	-2.002	-1.502		-1.204	-1.251	-1.098		-.7041	-.9036	-.8641
1.591		-3.310	-2.066	-1.543		-1.244	-1.295	-1.130		-.7199	-.9360	-.8901
1.818		-3.406	-2.121	-1.575		-1.285	-1.333	-1.156		-.7390	-.9649	-.9113
2.045		-3.495	-2.167	-1.600		-1.328	-1.367	-1.176		-.7608	-.9906	-.9284
2.273		-3.578	-2.206	-1.620		-1.371	-1.396	-1.193		-.7847	-1.013	-.9422
2.500		-3.654	-2.239	-1.635		-1.415	-1.422	-1.206		-.8105	-1.034	-.9532
2.727		-3.726	-2.267	-1.647		-1.459	-1.444	-1.216		-.8379	-1.052	-.9619
2.955		-3.792	-2.291	-1.655		-1.502	-1.463	-1.223		-.8667	-1.067	-.9687
3.182		-3.854	-2.310	-1.662		-1.545	-1.479	-1.229		-.8967	-1.081	-.9738
3.409		-3.912	-2.325	-1.666		-1.587	-1.492	-1.233		-.9278	-1.092	-.9775
3.636		-3.966	-2.338	-1.670		-1.628	-1.503	-1.236		-.9596	-1.102	-.9802
3.864		-4.015	-2.348	-1.672		-1.668	-1.512	-1.238		-.9920	-1.110	-.9820
4.091		-4.061	-2.355	-1.673		-1.706	-1.518	-1.239		-1.024	-1.116	-.9831
4.318		-4.102	-2.360	-1.674		-1.742	-1.523	-1.240		-1.056	-1.120	-.9837
4.545		-4.138	-2.363	-1.674		-1.775	-1.526	-1.240		-1.087	-1.123	-.9840
4.773		-4.168	-2.364	-1.674		-1.804	-1.527	-1.240		-1.113	-1.124	-.9841
5.000		-4.187	-2.365	-1.674		-1.822	-1.528	-1.240		-1.131	-1.125	-.9843

A426

TABLE I.- GENERALIZED INDICIAL FORCE, $Q_{mn}^{pq}(t_o)$, FOR M=1.2, A=4 (Cont'd)

n=0, q=2 or n=2, q=0

t_o	p	m=0	m=1	m=2	p	m=0	m=1	m=2	p	m=0	m=1	m=2
0.	0	-4.444	-2.222	-1.481	1	-2.222	-1.481	-1.111	2	-1.481	-1.111	-0.8889
.04545		-4.300	-2.154	-1.440		-2.146	-1.434	-1.079		-1.431	-1.075	-.8606
.09091		-4.167	-2.100	-1.413		-2.068	-1.392	-1.057		-1.383	-1.043	-.8437
.1364		-4.047	-2.058	-1.403		-1.989	-1.357	-1.043		-1.334	-1.015	-.8315
.1818		-3.939	-2.029	-1.403		-1.910	-1.328	-1.038		-1.284	-.9907	-.8252
.2273		-3.841	-2.010	-1.411		-1.832	-1.304	-1.040		-1.233	-.9702	-.8242
.2727		-3.754	-2.000	-1.427		-1.754	-1.287	-1.047		-1.180	-.9536	-.8275
.3182		-3.677	-2.000	-1.444		-1.678	-1.276	-1.058		-1.124	-.9412	-.8346
.3636		-3.608	-2.005	-1.463		-1.603	-1.270	-1.072		-1.067	-.9331	-.8445
.4091		-3.549	-2.015	-1.483		-1.530	-1.271	-1.089		-1.006	-.9290	-.8567
.4545		-3.497	-2.038	-1.521		-1.459	-1.277	-1.107		-.9406	-.9309	-.8709
.6818		-3.511	-2.153	-1.644		-1.348	-1.341	-1.194		-.8287	-.9695	-.9361
.9091		-3.620	-2.281	-1.741		-1.339	-1.411	-1.265		-.7989	-1.017	-.9918
1.136		-3.740	-2.382	-1.817		-1.358	-1.474	-1.322		-.7932	-1.070	-1.037
1.364		-3.858	-2.468	-1.877		-1.390	-1.529	-1.368		-.7991	-1.100	-1.074
1.591		-3.969	-2.540	-1.924		-1.429	-1.578	-1.404		-.8121	-1.137	-1.104
1.818		-4.073	-2.602	-1.961		-1.471	-1.622	-1.434		-.8299	-1.168	-1.128
2.045		-4.170	-2.654	-1.993		-1.516	-1.659	-1.458		-.8513	-1.197	-1.148
2.273		-4.260	-2.699	-2.015		-1.562	-1.692	-1.476		-.8756	-1.222	-1.163
2.500		-4.345	-2.736	-2.030		-1.608	-1.721	-1.491		-.9023	-1.245	-1.177
2.727		-4.423	-2.768	-2.044		-1.655	-1.746	-1.503		-.9311	-1.265	-1.186
2.955		-4.496	-2.794	-2.055		-1.702	-1.767	-1.511		-.9617	-1.283	-1.194
3.182		-4.565	-2.816	-2.061		-1.749	-1.786	-1.518		-.9939	-1.298	-1.200
3.409		-4.629	-2.834	-2.067		-1.795	-1.801	-1.523		-1.028	-1.311	-1.204
3.636		-4.688	-2.848	-2.07		-1.840	-1.813	-1.527		-1.062	-1.322	-1.207
3.864		-4.744	-2.860	-2.07		-1.884	-1.823	-1.529		-1.098	-1.331	-1.209
4.091		-4.794	-2.868	-2.07		-1.927	-1.830	-1.530		-1.133	-1.338	-1.211
4.318		-4.841	-2.874	-2.07		-1.967	-1.836	-1.531		-1.169	-1.342	-1.211
4.545		-4.882	-2.877	-2.07		-2.005	-1.839	-1.531		-1.203	-1.347	-1.212
4.773		-4.917	-2.879	-2.07		-2.038	-1.841	-1.531		-1.235	-1.348	-1.212
5.000		-4.940	-2.880	-2.07		-2.060	-1.842	-1.534		-1.256	-1.348	-1.212

n=1, q=1

0.	0	-4.444	-2.222	-1.48	1	-2.222	-1.481	-1.111	2	-1.481	-1.111	-0.8889
.04545		-4.298	-2.153	-1.440		-2.145	-1.433	-1.078		-1.431	-1.075	-.8623
.09091		-4.161	-2.097	-1.41		-2.064	-1.390	-1.055		-1.380	-1.042	-.8427
.1364		-4.034	-2.053	-1.40		-1.982	-1.353	-1.041		-1.329	-1.012	-.8293
.1818		-3.917	-2.019	-1.39		-1.898	-1.321	-1.034		-1.275	-.9855	-.8217
.2273		-3.809	-1.996	-1.40		-1.813	-1.295	-1.034		-1.220	-.9627	-.8192
.2727		-3.711	-1.982	-1.41		-1.728	-1.275	-1.039		-1.162	-.9437	-.8211
.3182		-3.621	-1.977	-1.43		-1.644	-1.260	-1.048		-1.101	-.9288	-.8267
.3636		-3.541	-1.979	-1.45		-1.562	-1.252	-1.061		-1.037	-.9182	-.8353
.4091		-3.469	-1.988	-1.478		-1.481	-1.249	-1.076		-.9708	-.9122	-.8459
.4545		-3.406	-2.003	-1.50		-1.402	-1.252	-1.092		-.9017	-.9110	-.8588
.6818		-3.365	-2.109	-1.61		-1.256	-1.301	-1.171		-.7623	-.9380	-.9171
.9091		-3.422	-2.208	-1.70		-1.214	-1.357	-1.234		-.7085	-.9735	-.9765
1.136		-3.493	-2.298	-1.770		-1.201	-1.407	-1.285		-.6797	-1.007	-1.004
1.364		-3.564	-2.362	-1.82		-1.202	-1.450	-1.325		-.6635	-1.037	-1.038
1.591		-3.632	-2.421	-1.86		-1.212	-1.489	-1.356		-.6551	-1.064	-1.063
1.818		-3.696	-2.470	-1.89		-1.226	-1.522	-1.382		-.6524	-1.088	-1.084
2.045		-3.757	-2.512	-1.92		-1.245	-1.551	-1.402		-.6542	-1.110	-1.101
2.273		-3.813	-2.548	-1.94		-1.266	-1.577	-1.418		-.6596	-1.129	-1.114
2.500		-3.867	-2.577	-1.95		-1.290	-1.599	-1.430		-.6683	-1.147	-1.125
2.727		-3.917	-2.602	-1.96		-1.315	-1.619	-1.440		-.6799	-1.162	-1.133
2.955		-3.965	-2.624	-1.97		-1.342	-1.635	-1.448		-.6942	-1.176	-1.140
3.182		-4.011	-2.641	-1.98		-1.370	-1.650	-1.453		-.7110	-1.188	-1.145
3.409		-4.055	-2.656	-1.987		-1.399	-1.662	-1.458		-.7303	-1.198	-1.149
3.636		-4.097	-2.668	-1.991		-1.429	-1.673	-1.461		-.7520	-1.207	-1.151
3.864		-4.138	-2.677	-1.993		-1.460	-1.681	-1.463		-.7759	-1.215	-1.153
4.091		-4.177	-2.684	-1.994		-1.492	-1.687	-1.464		-.8020	-1.220	-1.155
4.318		-4.214	-2.690	-1.995		-1.525	-1.692	-1.465		-.8300	-1.225	-1.155
4.545		-4.250	-2.693	-1.995		-1.557	-1.695	-1.465		-.8590	-1.228	-1.156
4.773		-4.281	-2.695	-1.995		-1.587	-1.697	-1.465		-.8872	-1.230	-1.156
5.000		-4.304	-2.696	-1.996		-1.608	-1.698	-1.465		-.9081	-1.230	-1.156

TABLE I.- GENERALIZED INDICIAL FORCE, $Q_{mn}^{pq}(t_o)$, FOR M=1.2, A=4 (Concluded)

n=1, q=2 or n=2, q=1

t_o	p	m=0	m=1	m=2	p	m=0	m=1	m=2	p	m=0	m=1	m=2
0.	0	-6.667	-3.333	-2.222	1	-3.333	-2.222	-1.667	2	-2.222	-1.667	-1.333
.04545		-6.376	-3.195	-2.137		-3.181	-2.127	-1.601		-2.122	-1.595	-1.280
.09091		-6.109	-3.082	-2.080		-3.027	-2.043	-1.552		-2.024	-1.530	-1.239
.1364		-5.866	-2.993	-2.045		-2.873	-1.970	-1.520		-1.926	-1.473	-1.211
.1818		-5.645	-2.923	-2.030		-2.721	-1.908	-1.501		-1.828	-1.423	-1.192
.2273		-5.444	-2.873	-2.030		-2.572	-1.858	-1.493		-1.728	-1.380	-1.182
.2727		-5.264	-2.839	-2.041		-2.425	-1.818	-1.495		-1.627	-1.344	-1.180
.3182		-5.103	-2.820	-2.061		-2.284	-1.789	-1.504		-1.525	-1.316	-1.185
.3636		-4.960	-2.813	-2.086		-2.147	-1.770	-1.518		-1.420	-1.295	-1.194
.4091		-4.835	-2.818	-2.116		-2.017	-1.760	-1.536		-1.314	-1.282	-1.206
.4545		-4.726	-2.833	-2.146		-1.893	-1.759	-1.556		-1.207	-1.276	-1.220
.6818		-4.605	-2.954	-2.290		-1.651	-1.809	-1.655		-.9863	-1.299	-1.294
.9091		-4.638	-3.073	-2.403		-1.564	-1.872	-1.736		-.8938	-1.337	-1.356
1.136		-4.699	-3.174	-2.489		-1.525	-1.930	-1.800		-.8394	-1.375	-1.406
1.364		-4.766	-3.258	-2.555		-1.507	-1.981	-1.850		-.8044	-1.409	-1.446
1.591		-4.832	-3.329	-2.607		-1.503	-2.025	-1.889		-.7816	-1.439	-1.477
1.818		-4.896	-3.388	-2.647		-1.508	-2.064	-1.921		-.7674	-1.467	-1.503
2.045		-4.957	-3.438	-2.679		-1.519	-2.098	-1.946		-.7599	-1.492	-1.524
2.273		-5.015	-3.480	-2.703		-1.535	-2.128	-1.966		-.7579	-1.514	-1.540
2.500		-5.070	-3.516	-2.722		-1.554	-2.155	-1.981		-.7607	-1.534	-1.553
2.727		-5.123	-3.546	-2.737		-1.577	-2.178	-1.994		-.7677	-1.552	-1.564
2.955		-5.174	-3.572	-2.748		-1.603	-2.198	-2.003		-.7786	-1.569	-1.572
3.182		-5.224	-3.593	-2.756		-1.631	-2.215	-2.010		-.7933	-1.583	-1.579
3.409		-5.272	-3.611	-2.762		-1.661	-2.230	-2.016		-.8116	-1.595	-1.583
3.636		-5.319	-3.626	-2.766		-1.693	-2.243	-2.020		-.8336	-1.606	-1.587
3.864		-5.365	-3.637	-2.769		-1.728	-2.253	-2.022		-.8592	-1.615	-1.589
4.091		-5.411	-3.647	-2.771		-1.764	-2.261	-2.024		-.8884	-1.623	-1.591
4.318		-5.456	-3.653	-2.772		-1.803	-2.267	-2.025		-.9210	-1.628	-1.592
4.545		-5.499	-3.657	-2.772		-1.842	-2.271	-2.025		-.9564	-1.632	-1.592
4.773		-5.540	-3.660	-2.772		-1.880	-2.274	-2.025		-.9925	-1.635	-1.592
5.000		-5.571	-3.661	-2.773		-1.910	-2.275	-2.026		-1.021	-1.636	-1.593

n=2, q=2

t_o	p	m=0	m=1	m=2	p	m=0	m=1	m=2	p	m=0	m=1	m=2
0.	0	-10.67	-5.333	-3.556	1	-5.333	-3.556	-2.667	2	-3.556	-2.667	-2.133
.04545		-10.09	-5.057	-3.383		-5.031	-3.366	-2.534		-3.357	-2.523	-2.026
.09091		-9.563	-4.831	-3.263		-4.732	-3.199	-2.435		-3.164	-2.396	-1.943
.1364		-9.087	-4.649	-3.186		-4.438	-3.057	-2.365		-2.974	-2.284	-1.883
.1818		-8.660	-4.508	-3.143		-4.152	-2.936	-2.321		-2.787	-2.187	-1.842
.2273		-8.277	-4.401	-3.127		-3.876	-2.837	-2.297		-2.602	-2.104	-1.817
.2727		-7.936	-4.325	-3.132		-3.611	-2.759	-2.290		-2.418	-2.035	-1.806
.3182		-7.635	-4.276	-3.153		-3.359	-2.700	-2.296		-2.235	-1.981	-1.806
.3636		-7.371	-4.250	-3.183		-3.121	-2.658	-2.311		-2.054	-1.939	-1.814
.4091		-7.142	-4.244	-3.221		-2.899	-2.634	-2.333		-1.875	-1.911	-1.828
.4545		-6.945	-4.254	-3.261		-2.691	-2.624	-2.358		-1.698	-1.896	-1.846
.6818		-6.658	-4.391	-3.451		-2.266	-2.666	-2.486		-1.326	-1.905	-1.940
.9091		-6.630	-4.534	-3.600		-2.096	-2.734	-2.592		-1.162	-1.942	-2.020
1.136		-6.659	-4.657	-3.714		-2.003	-2.800	-2.674		-1.060	-1.982	-2.084
1.364		-6.707	-4.759	-3.801		-1.949	-2.858	-2.739		-.9910	-2.020	-2.135
1.591		-6.762	-4.844	-3.868		-1.918	-2.910	-2.790		-.9417	-2.054	-2.175
1.818		-6.818	-4.916	-3.921		-1.902	-2.956	-2.831		-.9066	-2.085	-2.208
2.045		-6.874	-4.977	-3.961		-1.897	-2.996	-2.863		-.8821	-2.114	-2.234
2.273		-6.929	-5.028	-3.993		-1.901	-3.031	-2.888		-.8662	-2.140	-2.256
2.500		-6.983	-5.072	-4.017		-1.912	-3.063	-2.909		-.8577	-2.163	-2.273
2.727		-7.036	-5.109	-4.036		-1.928	-3.090	-2.924		-.8555	-2.184	-2.286
2.955		-7.089	-5.140	-4.051		-1.949	-3.115	-2.937		-.8592	-2.203	-2.297
3.182		-7.141	-5.167	-4.061		-1.974	-3.136	-2.946		-.8684	-2.221	-2.305
3.409		-7.192	-5.189	-4.069		-2.003	-3.155	-2.953		-.8831	-2.236	-2.311
3.636		-7.244	-5.208	-4.075		-2.036	-3.170	-2.958		-.9033	-2.250	-2.316
3.863		-7.296	-5.223	-4.079		-2.073	-3.183	-2.961		-.9291	-2.261	-2.319
4.091		-7.349	-5.234	-4.081		-2.114	-3.194	-2.964		-.9610	-2.271	-2.321
4.318		-7.403	-5.243	-4.082		-2.160	-3.202	-2.965		-.9989	-2.278	-2.322
4.545		-7.458	-5.249	-4.083		-2.209	-3.208	-2.966		-1.043	-2.283	-2.323
4.773		-7.512	-5.252	-4.083		-2.260	-3.211	-2.966		-1.091	-2.286	-2.330
5.000		-7.557	-5.255	-4.084		-2.303	-3.213	-2.967		-1.132	-2.288	-2.324

A
4
2
6

TABLE II.- GENERALIZED SINUSOIDAL FORCE AMPLITUDE, $Q_{mn}^{pq}(k)$ or $\bar{Q}_{mn}^{pq}(\omega)$, FOR M=1.2, A=4

(a) n=0, q=0, p=0

k	m=0		m=1		m=2	
	Real	Imaginary	Real	Imaginary	Real	Imaginary
0.02000	-4.881	0.1894	-2.633	0.07022	-1.819	0.03723
.04000	-4.843	.3748	-2.622	.1396	-1.815	.07417
.06000	-4.780	.5522	-2.605	.2072	-1.808	.1105
.08000	-4.694	.7180	-2.582	.2724	-1.798	.1460
.1000	-4.588	.8688	-2.552	.3343	-1.785	.1803
.1200	-4.465	1.002	-2.517	.3923	-1.770	.2132
.1400	-4.327	1.115	-2.477	.4458	-1.753	.2446
.1600	-4.177	1.207	-2.433	.4943	-1.733	.2740
.1800	-4.021	1.275	-2.385	.5374	-1.712	.3015
.2000	-3.862	1.321	-2.335	.5748	-1.689	.3269
.2200	-3.702	1.344	-2.282	.6064	-1.664	.3450
.2400	-3.547	1.345	-2.229	.6321	-1.639	.3708
.2600	-3.398	1.325	-2.174	.6519	-1.613	.3892
.2800	-3.259	1.288	-2.120	.6661	-1.586	.4052
.3000	-3.133	1.234	-2.067	.6748	-1.558	.4188
.3200	-3.021	1.167	-2.015	.6784	-1.531	.4301
.3400	-2.924	1.090	-1.965	.6773	-1.503	.4391
.3600	-2.843	1.006	-1.918	.6721	-1.476	.4460
.3800	-2.779	.9171	-1.874	.6631	-1.450	.4509
.4000	-2.732	.8272	-1.832	.6509	-1.424	.4538
.4200	-2.699	.7388	-1.794	.6361	-1.399	.4550
.4400	-2.680	.6540	-1.760	.6193	-1.375	.4546
.4600	-2.674	.5751	-1.729	.6008	-1.352	.4528
.4800	-2.678	.5035	-1.701	.5814	-1.330	.4497
.5000	-2.690	.4405	-1.677	.5613	-1.310	.4455
.5500	-2.742	.3239	-1.628	.5113	-1.263	.4314
.6000	-2.801	.2631	-1.595	.4651	-1.224	.4138
.6500	-2.841	.2439	-1.573	.4252	-1.192	.3948
.7000	-2.851	.2446	-1.557	.3923	-1.165	.3757
.7500	-2.831	.2434	-1.543	.3653	-1.143	.3573
.8000	-2.792	.2244	-1.530	.3422	-1.124	.3401
.8500	-2.750	.1810	-1.516	.3210	-1.108	.3241
.9000	-2.720	.1162	-1.503	.3000	-1.094	.3090
.9500	-2.712	.04038	-1.490	.2784	-1.081	.2947
1.000	-2.729	-.03307	-1.480	.2561	-1.069	.2809
1.100	-2.812	-.1309	-1.467	.2118	-1.050	.2544
1.200	-2.889	-.1508	-1.464	.1730	-1.035	.2293
1.300	-2.911	-.1468	-1.465	.1423	-1.024	.2061
1.400	-2.902	-.1783	-1.466	.1169	-1.016	.1853
1.500	-2.919	-.2443	-1.466	.09284	-1.010	.1664
1.600	-2.980	-.2969	-1.469	.06913	-1.006	.1490
1.700	-3.049	-.3048	-1.475	.04757	-1.003	.1328
1.800	-3.086	-.2872	-1.484	.02983	-1.001	.1179
1.900	-3.095	-.2841	-1.492	.01534	-1.001	.1043
2.000	-3.109	-.3077	-1.499	.002358	-1.001	.09195

TABLE II.- GENERALIZED SINUSOIDAL FORCE AMPLITUDE, $Q_{mn}^{pq}(k)$ or $\bar{Q}_{mn}^{pq}(\omega)$, FOR M=1.2, A=4 (Cont'd)

n=0, q=0, p=1

k	m=0		m=1		m=2	
	Real	Imaginary	Real	Imaginary	Real	Imaginary
0.02000	-2.248	0.1192	-1.723	0.05160	-1.355	0.02950
.04000	-2.220	.2352	-1.715	.1025	-1.351	.5875
.06000	-2.174	.3449	-1.702	.1520	-1.345	.8750
.08000	-2.112	.4456	-1.683	.1994	-1.337	.1155
.1000	-2.036	.5345	-1.660	.2442	-1.327	.1425
.1200	-1.947	.6097	-1.632	.2857	-1.314	.1684
.1400	-1.849	.6693	-1.601	.3235	-1.300	.1928
.1600	-1.744	.7122	-1.567	.3573	-1.284	.2158
.1800	-1.636	.7378	-1.530	.3866	-1.266	.2370
.2000	-1.527	.7460	-1.490	.4114	-1.247	.2564
.2200	-1.420	.7373	-1.450	.4314	-1.228	.2739
.2400	-1.318	.7126	-1.409	.4467	-1.207	.2895
.2600	-1.224	.6734	-1.368	.4573	-1.185	.3031
.2800	-1.139	.6216	-1.327	.4635	-1.163	.3146
.3000	-1.066	.5592	-1.288	.4654	-1.141	.3242
.3200	-1.006	.4887	-1.250	.4634	-1.119	.3319
.3400	-.9586	.4127	-1.214	.4578	-1.097	.3377
.3600	-.9254	.3336	-1.180	.4490	-1.076	.3418
.3800	-.9058	.2540	-1.149	.4376	-1.055	.3442
.4000	-.8991	.1763	-1.120	.4240	-1.035	.3451
.4200	-.9044	.1026	-1.095	.4086	-1.015	.3445
.4400	-.9202	.03477	-1.072	.3919	-.9965	.3428
.4600	-.9448	-.02576	-1.053	.3744	-.9788	.3399
.4800	-.9765	-.07785	-1.036	.3565	-.9621	.3360
.5000	-1.013	-.1208	-1.022	.3386	-.9464	.3314
.5500	-1.114	-.1874	-.9969	.2956	-.9119	.3171
.6000	-1.206	-.2019	-.9834	.2581	-.8837	.3007
.6500	-1.268	-.1814	-.9771	.2278	-.8610	.2837
.7000	-1.295	-.1478	-.9740	.2045	-.8429	.2673
.7500	-1.288	-.1219	-.9713	.1866	-.8282	.2520
.8000	-1.263	-.1178	-.9674	.1722	-.8161	.2380
.8500	-1.234	-.1400	-.9620	.1589	-.8057	.2252
.9000	-1.217	-.1838	-.9557	.1455	-.7965	.2134
.9500	-1.222	-.2380	-.9497	.1310	-.7882	.2023
1.000	-1.249	-.2892	-.9450	.1156	-.7808	.1917
1.100	-1.345	-.3427	-.9418	.08459	-.7682	.1712
1.200	-1.426	-.3238	-.9461	.05840	-.7591	.1519
1.300	-1.446	-.2891	-.9527	.03927	-.7529	.1343
1.400	-1.436	-.2952	-.9576	.02427	-.7488	.1186
1.500	-1.453	-.3372	-.9612	.009649	-.7459	.1046
1.600	-1.510	-.3660	-.9663	-.005372	-.7440	.09179
1.700	-1.573	-.3524	-.9740	-.01885	-.7431	.07988
1.800	-1.603	-.3170	-.9830	-.02915	-.7432	.06894
1.900	-1.604	-.2995	-.9912	-.03682	-.7440	.05905
2.000	-1.610	-.3101	-.9982	-.04362	-.7453	.05016

TABLE II.- GENERALIZED SINUSOIDAL FORCE AMPLITUDE, $Q_{mn}^{pq}(k)$ or $\bar{Q}_{mn}^{pq}(\omega)$, FOR M=1.2, A=4 (Cont'd)

n=0, q=0, p=2

k	m=0		m=1		m=2	
	Real	Imaginary	Real	Imaginary	Real	Imaginary
0.02000	-1.434	0.08620	-1.278	0.04072	-1.079	0.02442
.04000	-1.413	.1698	-1.271	.08083	-1.076	.04861
.06000	-1.377	.2482	-1.260	.1197	-1.071	.07237
.08000	-1.328	.3191	-1.245	.1569	-1.064	.09548
.1000	-1.269	.3805	-1.226	.1918	-1.055	.1177
.1200	-1.200	.4306	-1.203	.2240	-1.044	.1390
.1400	-1.124	.4680	-1.177	.2530	-1.032	.1590
.1600	-1.044	.4920	-1.149	.2786	-1.018	.1777
.1800	-.9622	.5020	-1.119	.3004	-1.003	.1949
.2000	-.8806	.4981	-1.087	.3184	-.9876	.2106
.2200	-.8019	.4809	-1.055	.3325	-.9707	.2246
.2400	-.7284	.4513	-1.022	.3426	-.9532	.2369
.2600	-.6621	.4107	-.9889	.3488	-.9352	.2476
.2800	-.6046	.3607	-.9566	.3514	-.9169	.2565
.3000	-.5574	.3032	-.9254	.3505	-.8984	.2637
.3200	-.5212	.2404	-.8957	.3465	-.8800	.2693
.3400	-.4966	.1745	-.8679	.3396	-.8619	.2733
.3600	-.4837	.1076	-.8421	.3303	-.8441	.2759
.3800	-.4820	.04184	-.8187	.3189	-.8268	.2770
.4000	-.4908	-.02075	-.7977	.3058	-.8102	.2769
.4200	-.5090	-.07847	-.7793	.2916	-.7943	.2756
.4400	-.5353	-.1298	-.7634	.2765	-.7792	.2733
.4600	-.5681	-.1738	-.7500	.2610	-.7649	.2702
.4800	-.6056	-.2095	-.7390	.2453	-.7515	.2662
.5000	- 6460	-.2366	-.7302	.2300	-.7391	.2616
.5500	-.7485	-.2673	-.7166	.1942	-.7120	.2483
.6000	-.8341	-.2532	-.7118	.1643	-.6904	.2335
.6500	-.8872	-.2118	-.7120	.1415	-.6734	.2186
.7000	-.9033	-.1644	-.7137	.1251	-.6602	.2046
.7500	-.8887	-.1299	-.7146	.1134	-.6498	.1918
.8000	-.8574	-.1199	-.7135	.1043	-.6412	.1803
.8500	-.8259	-.1370	-.7104	.09579	-.6339	.1700
.9000	-.8083	-.1748	-.7061	.08658	-.6273	.1606
.9500	-.8126	-.2217	-.7020	.07607	-.6214	.1517
1.000	-.8390	-.2643	-.6989	.06441	-.6159	.1432
1.000	-.9281	-.3001	-.6985	.04057	-.6069	.1268
1.500	-.9969	-.2676	-.7045	.02113	-.6005	.1113
1.300	-1.005	-.2253	-.7118	.008034	-.5966	.09718
1.400	-.9866	-.2268	-.7169	-.001730	-.5942	.08479
1.500	-.9965	-.2636	-.7204	-.01179	-.5927	.07380
1.600	-1.047	-.2861	-.7251	-.02266	-.5918	.06373
1.700	-1.101	-.2671	-.7323	-.03231	-.5917	.05438
1.800	-1.120	-.2289	-.7404	-.03913	-.5923	.04582
1.900	-1.113	-.2105	-.7475	-.04371	-.5935	.03814
2.000	-1.113	-.2205	-.7534	-.04780	-.5950	.03128

TABLE II.- GENERALIZED SINUSOIDAL FORCE AMPLITUDE, $Q_{mn}^{pq}(k)$ or $\bar{Q}_{mn}^{pq}(\omega)$, FOR M=1.2, A=4 (Cont'd)

n=0, q=1 or n=1, q=0; p=0

k	m=0		m=1		m-2	
	Real	Imaginary	Real	Imaginary	Real	Imaginary
0.02000	-4.176	0.1433	-2.362	0.05679	-1.673	-0.02455
.04000	-4.145	.2833	-2.353	.1129	-1.669	-.04838
.06000	-4.096	.4170	-2.339	.1676	-1.663	-.07080
.08000	-4.029	.5414	-2.320	.2201	-1.655	-.09116
.1000	-3.946	.6539	-2.296	.2701	-1.644	-.1089
.1200	-3.849	.7522	-2.267	.3168	-1.631	-.1234
.1400	-3.740	.8346	-2.234	.3598	-1.617	-.1343
.1600	-3.624	.8996	-2.198	.3987	-1.600	-.1412
.1800	-3.503	.9469	-2.159	.4331	-1.582	-.1440
.2000	-3.379	.9757	-2.118	.4629	-1.563	-.1425
.2200	-3.256	.9866	-2.075	.4879	-1.542	-.1368
.2400	-3.136	.9803	-2.031	.5080	-1.521	-.1269
.2600	-3.022	.9582	-1.987	.5233	-1.498	-.01131
.2800	-2.917	.9218	-1.943	.5340	-1.476	-.09570
.3000	-2.822	.8732	-1.899	.5402	-1.452	-.07513
.3100	-2.739	.8146	-1.857	.5423	-1.429	-.05187
.3400	-2.668	.7484	-1.817	.5406	-1.406	-.02644
.3600	-2.610	.6771	-1.779	.5355	-1.383	.0005817
.3800	-2.566	.6031	-1.743	.5273	-1.361	.02860
.4000	-2.534	.5286	-1.709	.5167	-1.339	.05702
.4200	-2.514	.4560	-1.679	.5039	-1.318	.08526
.4400	-2.505	.3869	-1.651	.4895	-1.298	.1128
.4600	-2.506	.3230	-1.626	.4738	-1.278	.1391
.4800	-2.515	.2656	-1.604	.4574	-1.260	.1637
.5000	-2.529	.2153	-1.585	.4405	-1.242	.1862
.5500	-2.581	.1236	-1.546	.3986	-1.203	.2319
.6000	-2.635	.07690	-1.520	.3600	-1.170	.2607
.6500	-2.671	.06234	-1.502	.3268	-1.143	.2730
.7000	-2.681	.06158	-1.489	.2993	-1.120	.2719
.7500	-2.666	.05681	-1.478	.2762	-1.101	.2616
.8000	-2.638	.03560	-1.468	.2563	-1.085	.2469
.8500	-2.608	-.006429	-1.457	.2376	-1.071	.2318
.9000	-2.590	-.06556	-1.446	.2189	-1.058	.2191
.9500	-2.592	-.1324	-1.436	.1996	-1.047	.2097
1.000	-2.615	-.1954	-1.428	.1797	-1.037	.2035
1.100	-2.699	-.2762	-1.419	.1403	-1.020	.1956
1.200	-2.773	-.2910	-1.419	.1059	-1.007	.1842
1.300	-2.797	-.2897	-1.422	.07855	-.9983	.1659
1.400	-2.798	-.3216	-1.424	.05551	-.9917	.1455
1.500	-2.825	-.3814	-1.427	.03350	-.9870	.1290
1.600	-2.889	-.4257	-1.432	.01187	-.9836	.1174
1.700	-2.957	-.4298	-1.439	-.007667	-.9816	.1068
1.800	-2.996	-.4135	-1.449	-.02374	-.9808	.09433
1.900	-3.010	-.4119	-1.458	-.03692	-.9810	.08064
2.000	-3.031	-.4333	-1.466	-.04883	-.9819	.06845

A
4
2
6

TABLE II.- GENERALIZED SINUSOIDAL FORCE AMPLITUDE, $Q_{mn}^{pq}(k)$ or $\bar{Q}_{mn}^{pq}(\omega)$, FOR M=1.2, A=4 (Cont'd)

n=0, q=1 or n=1, q=0; p=1

k	m=0		m=1		m=2	
	Real	Imaginary	Real	Imaginary	Real	Imaginary
0.02000	-1.814	0.08649	-1.525	0.01316	-1.239	-0.01260
.04000	-1.792	.1705	-1.519	.02622	-1.236	-.02478
.06000	-1.757	.2495	-1.508	.03909	-1.231	-.03610
.08000	-1.709	.3212	-1.493	.05167	-1.224	-.04618
.1000	-1.650	.3838	-1.474	.06387	-1.215	-.05466
.1200	-1.582	.4354	-1.451	.07561	-1.205	-.06123
.1400	-1.506	.4748	-1.426	.08680	-1.193	-.06564
.1600	-1.426	.5011	-1.398	.09739	-1.180	-.06769
.1800	-1.344	.5137	-1.368	.1073	-1.165	-.06727
.2000	-1.261	.5128	-1.336	.1165	-1.149	-.06432
.2200	-1.181	.4987	-1.304	.1249	-1.132	-.05886
.2400	-1.105	.4723	-1.271	.1325	-1.115	-.05097
.2600	-1.036	.4348	-1.237	.1393	-1.097	-.04081
.2800	-.9746	.3878	-1.205	.1453	-1.078	-.02859
.3000	-.9228	.3329	-1.173	.1504	-1.060	-.01457
.3200	-.8814	.2723	-1.143	.1546	-1.041	.0009402
.3400	-.8509	.2078	-1.114	.1581	-1.023	.01760
.3600	-.8314	.1416	-1.087	.1607	-1.005	.03506
.3800	-.8228	.07571	-1.062	.1625	-.9874	.05294
.4000	-.8244	.01198	-1.040	.1636	-.9704	.07088
.4200	-.8352	-.04791	-1.020	.1640	-.9540	.08852
.4400	-.8542	-.1025	-1.002	.1637	-.9383	.1055
.4600	-.8798	-.1508	-.9869	.1628	-.9236	.1216
.4800	-.9106	-.1918	-.9740	.1614	-.9096	.1364
.5000	-.9448	-.2252	-.9633	.1593	-.8965	.1498
.5500	-1.035	-.2750	-.9447	.1523	-.8675	.1761
.6000	-1.115	-.2831	-.9352	.1430	-.8438	.1912
.6500	-1.169	-.2644	-.9312	.1321	-.8247	.1958
.7000	-1.191	-.2376	-.9295	.1202	-.8094	.1919
.7500	-1.188	-.2194	-.9279	.1078	-.7970	.1824
.8000	-1.170	-.2207	-.9252	.09529	-.7867	.1704
.8500	-1.151	-.2440	-.9213	.08297	-.7778	.1586
.9000	-1.144	-.2845	-.9168	.07104	-.7699	.1485
.9500	-1.156	-.3320	-.9125	.05964	-.7628	.1409
1.000	-1.187	-.3751	-.9096	.04885	-.7564	.1355
1.100	-1.280	-.4165	-.9092	.02916	-.7458	.1277
1.200	-1.354	-.3969	-.9151	.01171	-.7382	.1179
1.300	-1.375	-.3683	-.9226	-.004011	-.7333	.1037
1.400	-1.374	-.3772	-.9285	-.01837	-.7302	.08850
1.500	-1.398	-.4149	-.9334	-.03141	-.7282	.07626
1.600	-1.457	-.4376	-.9398	-.04296	-.7270	.06734
1.700	-1.518	-.4222	-.9486	-.05295	-.7268	.05926
1.800	-1.547	-.3897	-.9582	-.06154	-.7275	.05004
1.900	-1.552	-.3750	-.9671	-.06902	-.7288	.04018
2.000	-1.565	-.3845	-.9750	-.07559	-.7306	.03147

TABLE II.- GENERALIZED SINUSOIDAL FORCE AMPLITUDE, $Q_{mn}^{pq}(k)$ or $\bar{Q}_{mn}^{pq}(\omega)$, FOR M=1.2, A=4 (Cont'd)

n=0, q=1 or n=1, q=0; p=2

k	m=0		m=1		m=2	
	Real	Imaginary	Real	Imaginary	Real	Imaginary
0.02000	-1.125	0.06105	-1.123	0.01349	-0.9832	-0.007642
.04000	-1.108	.1200	-1.117	.02681	-.9807	-.01499
.06000	-1.081	.1750	-1.108	.03979	-.9764	-.02174
.08000	-1.044	.2240	-1.096	.05227	-.9705	-.02764
.1000	-.9982	.2655	-1.080	.06411	-.9631	-.03244
.1200	-.9460	.2981	-1.062	.07516	-.9542	-.03592
.1400	-.8887	.3209	-1.041	.08532	-.9440	-.03792
.1600	-.8283	.3331	-1.019	.09448	-.9327	-.03830
.1800	-.7668	.3344	-.9943	.1026	-.9202	-.03699
.2000	-.7062	.3251	-.9688	.1096	-.9069	-.03395
.2200	-.6482	.3054	-.9426	.1154	-.8928	-.02920
.2400	-.5949	.2764	-.9162	.1201	-.8781	-.02282
.2600	-.5476	.2390	-.8899	.1236	-.8631	-.01490
.2800	-.5076	.1947	-.8641	.1260	-.8477	-.005623
.3000	-.4761	.1450	-.8394	.1274	-.8323	.004841
.3200	-.4535	.09169	-.8158	.1278	-.8170	.01627
.3400	-.4402	.03650	-.7938	.1272	-.8018	.02841
.3600	-.4362	-.01881	-.7736	.1259	-.7870	.04102
.3800	-.4411	-.07254	-.7553	.1239	-.7726	.05383
.4000	-.4542	-.1232	-.7390	.1213	-.7587	.06659
.4200	-.4746	-.1693	-.7248	.1181	-.7454	.07903
.4400	-.5010	-.2099	-.7127	.1146	-.7328	.09094
.4600	-.5321	-.2441	-.7026	.1108	-.7210	.1021
.4800	-.5665	-.2713	-.6944	.1068	-.7098	.1123
.5000	-.6028	-.2914	-.6880	.1026	-.6995	.1214
.5500	-.6922	-.3113	-.6788	.09212	-.6770	.1389
.6000	-.7648	-.2958	-.6764	.08207	-.6589	.1481
.6500	-.8088	-.2600	-.6778	.07279	-.6448	.1497
.7000	-.8219	-.2219	-.6800	.06425	-.6338	.1453
.7500	-.8105	-.1964	-.6814	.05621	-.6250	.1371
.8000	-.7870	-.1925	-.6809	.04832	-.6177	.1273
.8500	-.7653	-.2111	-.6789	.04030	-.6115	.1178
.9000	-.7568	-.2460	-.6760	.03203	-.6060	.1098
.9500	-.7674	-.2867	-.6733	.02356	-.6009	.1036
1.000	-.7963	-.3221	-.6717	.01510	-.5963	.09907
1.100	-.8810	-.3479	-.6735	-.0007837	-.5888	.09225
1.200	-.9429	-.3165	-.6805	-.01405	-.5837	.08393
1.300	-.9520	-.2813	-.6884	-.02475	-.5807	.07252
1.400	-.9411	-.2861	-.6942	-.03414	-.5791	.06056
1.500	-.9579	-.3190	-.6987	-.04315	-.5782	.05093
1.600	-1.009	-.3360	-.7046	-.05162	-.5780	.04384
1.700	-1.060	-.3158	-.7125	-.05881	-.5784	.03741
1.800	-1.079	-.2810	-.7211	-.06442	-.5795	.03018
1.900	-1.076	-.2656	-.7288	-.06888	-.5811	.02255
2.000	-1.081	-.2746	-.7353	-.07283	-.5831	.01585

A426

TABLE II.- GENERALIZED SINUSOIDAL FORCE AMPLITUDE, $Q_{mn}^{pq}(k)$ or $\bar{Q}_{mn}^{pq}(\omega)$, FOR M=1.2, A=4 (Cont'd)

n=0, q=2 or n=2, q=0; p=0

k	m=0		m=1		m=2	
	Real	Imaginary	Real	Imaginary	Real	Imaginary
0.02000	-4.928	0.1538	-2.876	0.06354	-2.074	0.03609
.04000	-4.894	.3040	-2.867	.1263	-2.070	.07188
.06000	-4.839	.4470	-2.851	.1874	-2.063	.1071
.08000	-4.764	.5796	-2.829	.2462	-2.053	.1414
.1000	-4.672	.6987	-2.801	.3019	-2.041	.1747
.1200	-4.564	.8020	-2.769	.3539	-2.026	.2066
.1400	-4.445	.8873	-2.731	.4017	-2.009	.2368
.1600	-4.316	.9533	-2.690	.4447	-1.990	.2653
.1800	-4.181	.9991	-2.646	.4827	-1.969	.2919
.2000	-4.045	1.025	-2.599	.5154	-1.947	.3163
.2200	-3.909	1.030	-2.550	.5425	-1.923	.3385
.2400	-3.778	1.016	-2.501	.5642	-1.898	.3585
.2600	-3.654	.9848	-2.450	.5804	-1.872	.3761
.2800	-3.540	.9377	-2.401	.5913	-1.846	.3914
.3000	-3.437	.8772	-2.352	.5972	-1.819	.4044
.3200	-3.348	.8058	-2.304	.5984	-1.792	.4151
.3400	-3.273	.7263	-2.259	.5953	-1.766	.4236
.3600	-3.213	.6414	-2.216	.5883	-1.739	.4300
.3800	-3.167	.5539	-2.175	.5779	-1.713	.4344
.4000	-3.137	.4664	-2.138	.5646	-1.688	.4370
.4200	-3.119	.3813	-2.104	.5490	-1.664	.4378
.4400	-3.114	.3007	-2.073	.5316	-1.640	.4371
.4600	-3.120	.2262	-2.045	.5129	-1.618	.4350
.4800	-3.134	.1593	-2.021	.4933	-1.597	.4317
.5000	-3.154	.1008	-1.999	.4732	-1.576	.4274
.5500	-3.222	-.006617	-1.957	.4236	-1.531	.4129
.6000	-3.290	-.06297	-1.929	.3779	-1.493	.3951
.6500	-3.336	-.08366	-1.910	.3385	-1.461	.3759
.7000	-3.352	-.08989	-1.896	.3056	-1.435	.3565
.7500	-3.341	-.1018	-1.885	.2778	-1.413	.3378
.8000	-3.314	-.1332	-1.873	.2534	-1.394	.3200
.8500	-3.288	-.1882	-1.862	.2303	-1.378	.3033
.9000	-3.277	-.2620	-1.851	.2072	-1.363	.2874
.9500	-3.288	-.3432	-1.841	.1833	-1.350	.2721
1.000	-3.324	-.4186	-1.833	.1588	-1.339	.2572
1.100	-3.437	-.5143	-1.826	.1105	-1.319	.2282
1.200	-3.533	-.5336	-1.828	.06850	-1.305	.2005
1.300	-3.571	-.5373	-1.835	.03471	-1.295	.1749
1.400	-3.584	-.5810	-1.841	.005931	-1.288	.1516
1.500	-3.630	-.6549	-1.847	-.02166	-1.283	.1303
1.600	-3.718	-.7074	-1.855	-.04864	-1.280	.1105
1.700	-3.809	-.7114	-1.867	-.07292	-1.279	.09200
1.800	-3.864	-.6928	-1.881	-.09292	-1.279	.07487
1.900	-3.890	-.6931	-1.895	-.1094	-1.280	.05920
2.000	-3.926	-.7198	-1.908	-.1244	-1.282	.04488

TABLE II.- GENERALIZED SINUSOIDAL FORCE AMPLITUDE, $Q_{mn}^{pq}(k)$ or $\bar{Q}_{mn}^{pq}(\omega)$, FOR M=1.2, A=4 (Cont'd)

n=0, q=2 or n=2, q=0; p=1

k	m=0		m=1		m=2	
	Real	Imaginary	Real	Imaginary	Real	Imaginary
0.02000	-2.051	0.09027	-1.839	0.04550	-1.530	0.02823
.04000	-2.028	.1777	-1.831	.09033	-1.527	.05621
.06000	-1.989	.2596	-1.819	.1339	-1.521	.08370
.08000	-1.936	.3334	-1.802	.1755	-1.513	.1105
.1000	-1.871	.3969	-1.781	.2145	-1.503	.1363
.1200	-1.796	.4481	-1.755	.2506	-1.491	.1609
.1400	-1.713	.4857	-1.727	.2832	-1.477	.1843
.1600	-1.626	.5086	-1.695	.3121	-1.461	.2061
.1800	-1.536	.5164	-1.661	.3368	-1.444	.2262
.2000	-1.446	.5092	-1.626	.3572	-1.426	.2446
.2200	-1.359	.4873	-1.589	.3733	-1.407	.2612
.2400	-1.278	.4519	-1.552	.3850	-1.387	.2758
.2600	-1.204	.4043	-1.514	.3924	-1.366	.2885
.2800	-1.139	.3463	-1.478	.3956	-1.345	.2993
.3000	-1.085	.2800	-1.442	.3950	-1.323	.3082
.3200	-1.043	.2074	-1.408	.3909	-1.302	.3152
.3400	-1.014	.1310	-1.376	.3835	-1.281	.3204
.3600	-.9969	.05317	-1.346	.3733	-1.260	.3239
.3800	-.9920	-.02394	-1.319	.3607	-1.240	.3258
.4000	-.9986	-.09819	-1.294	.3462	-1.220	.3262
.4200	-1.016	-.1677	-1.272	.3301	-1.201	.3253
.4400	-1.041	-.2309	-1.253	.3131	-1.183	.3232
.4600	-1.075	-.2866	-1.236	.2954	-1.166	.3200
.4800	-1.113	-.3340	-1.222	.2774	-1.150	.3159
.5000	-1.155	-.3724	-1.211	.2595	-1.135	.3110
.5500	-1.265	-.4302	-1.192	.2171	-1.102	.2964
.6000	-1.361	-.4409	-1.182	.1804	-1.075	.2797
.6500	-1.426	-.4222	-1.179	.1506	-1.053	.2625
.7000	-1.456	-.3954	-1.179	.1273	-1.036	.2458
.7500	-1.456	-.3797	-1.178	.1089	-1.022	.2302
.8000	-1.441	-.3866	-1.176	.09339	-1.010	.2157
.8500	-1.430	-.4186	-1.173	.07870	-.9995	.2024
.9000	-1.426	-.4692	-1.169	.06352	-.9905	.1899
.9500	-1.448	-.5265	-1.166	.04728	-.9825	.1780
1.000	-1.491	-.5774	-1.164	.03019	-.9753	.1665
1.100	-1.611	-.6248	-1.166	-.003585	-.9635	.1441
1.200	-1.704	-.6021	-1.176	-.03177	-.9553	.1228
1.300	-1.736	-.5720	-1.187	-.05275	-.9503	.1033
1.400	-1.743	-.5869	-1.197	-.06987	-.9474	.08584
1.500	-1.783	-.6333	-1.205	-.08680	-.9459	.07002
1.600	-1.863	-.6588	-1.215	-.1039	-.9454	.05540
1.700	-1.942	-.6385	-1.228	-.1189	-.9460	.04177
1.800	-1.982	-.5999	-1.242	-.1304	-.9477	.02923
1.900	-1.995	-.5837	-1.255	-.1390	-.9502	.01786
2.000	-2.019	-.5954	-1.266	-.1469	-.9533	.007583

A
4
2
6

TABLE II.- GENERALIZED SINUSOIDAL FORCE AMPLITUDE, $Q_{mn}^{pq}(k)$ or $\bar{Q}_{mn}^{pq}(\omega)$, FOR M=1.2, A=4 (Cont'd)

n=0, q=2 or n=2, q=0; p=2

k	m=0		m=1		m=2	
	Real	Imaginary	Real	Imaginary	Real	Imaginary
0.02000	-1.250	0.06282	-1.346	0.03531	-1.211	0.02316
.04000	-1.231	.1233	-1.340	.07006	-1.208	.04609
.06000	-1.201	.1793	-1.330	.1037	-1.203	.06861
.08000	-1.160	.2287	-1.316	.1357	-1.196	.09049
.1000	-1.111	.2697	-1.298	.1656	-1.188	.1116
.1200	-1.054	.3008	-1.278	.1930	-1.178	.1316
.1400	-.9912	.3209	-1.254	.2174	-1.166	.1505
.1600	-.9256	.3292	-1.229	.2387	-1.153	.1681
.1800	-.8590	.3256	-1.202	.2565	-1.138	.1843
.2000	-.7936	.3101	-1.173	.2707	-1.123	.1989
.2200	-.7317	.2833	-1.144	.2814	-1.107	.2120
.2400	-.6750	.2462	-1.114	.2884	-1.090	.2234
.2600	-.6255	.2000	-1.085	.2919	-1.073	.2332
.2800	-.5844	.1464	-1.056	.2920	-1.055	.2414
.3000	-.5529	.08711	-1.028	.2891	-1.037	.2479
.3200	-.5316	.02410	-1.002	.2832	-1.020	.2528
.3400	-.5209	-.04064	-.9778	.2749	-1.002	.2562
.3600	-.5205	-.1051	-.9555	.2644	-.9852	.2582
.3800	-.5301	-.1674	-.9355	.2521	-.9687	.2589
.4000	-.5489	-.2259	-.9177	.2384	-.9528	.2584
.4200	-.5756	-.2789	-.9023	.2237	-.9376	.2567
.4400	-.6089	-.3254	-.8893	.2084	-.9231	.2541
.4600	-.6474	-.3645	-.8786	.1929	-.9096	.2507
.4800	-.6892	-.3955	-.8701	.1774	-.8969	.2465
.5000	-.7329	-.4183	-.8636	.1622	-.8850	.2417
.5500	-.8392	-.4409	-.8549	.1272	-.8593	.2280
.6000	-.9249	-.4237	-.8538	.09823	-.8389	.2130
.6500	-.9772	-.3848	-.8568	.07602	-.8228	.1980
.7000	-.9942	-.3445	-.8606	.05975	-.8103	.1837
.7500	-.9840	-.3197	-.8632	.04766	-.8004	.1707
.8000	-.9612	-.3200	-.8637	.03767	-.7922	.1589
.8500	-.9417	-.3456	-.8624	.02794	-.7852	.1481
.9000	-.9384	-.3890	-.8602	.01728	-.7790	.1381
.9500	-.9572	-.4378	-.8583	.005297	-.7733	.1286
1.000	-.9969	-.4790	-.8577	-.007705	-.7683	.1194
1.100	-1.104	-.5071	-.8624	-.03358	-.7601	.1014
1.200	-1.181	-.4701	-.8731	-.05433	-.7549	.08426
1.300	-1.196	-.4318	-.8845	-.06862	-.7521	.06869
1.400	-1.190	-.4412	-.8933	-.07991	-.7509	.05486
1.500	-1.220	-.4813	-.9008	-.09168	-.7506	.04244
1.600	-1.288	-.4996	-.9099	-.1040	-.7511	.03097
1.700	-1.353	-.4736	-.9215	-.1147	-.7524	.02028
1.800	-1.380	-.4321	-.9337	-.1221	-.7545	.01047
1.900	-1.380	-.4160	-.9447	-.1273	-.7573	.001656
2.000	-1.393	-.4261	-.9543	-.1320	-.7604	-.006253

TABLE II.- GENERALIZED SINUSOIDAL FORCE AMPLITUDE, $Q_{mn}^{pq}(k)$ or $\bar{Q}_{mn}^{pq}(\omega)$, FOR M=1.2, A=4 (Cont'd)

n=1, q=1; p=0

k	m=0		m=1		m=2	
	Real	Imaginary	Real	Imaginary	Real	Imaginary
0.02000	-4.294	0.1021	-2.692	0.03250	-1.994	0.01263
.04000	-4.270	.2015	-2.684	.06465	-1.990	.02533
.06000	-4.230	.2954	-2.671	.09612	-1.984	.03818
.08000	-4.175	.3814	-2.653	.1266	-1.976	.05124
.1000	-4.108	.4571	-2.631	.1558	-1.965	.06456
.1200	-4.031	.5209	-2.604	.1834	-1.952	.07819
.1400	-3.945	.5711	-2.574	.2092	-1.937	.09214
.1600	-3.853	.6068	-2.540	.2330	-1.921	.1064
.1800	-3.758	.6275	-2.504	.2546	-1.902	.1210
.2000	-3.662	.6331	-2.465	.2740	-1.883	.1359
.2200	-3.569	.6240	-2.426	.2910	-1.862	.1510
.2400	-3.479	.6012	-2.385	.3056	-1.840	.1662
.2600	-3.396	.5658	-2.344	.3178	-1.817	.1816
.2800	-3.322	.5196	-2.304	.3278	-1.794	.1968
.3000	-3.257	.4644	-2.264	.3355	-1.771	.2120
.3200	-3.202	.4022	-2.226	.3410	-1.748	.2268
.3400	-3.159	.3353	-2.189	.3446	-1.724	.2412
.3600	-3.128	.2659	-2.155	.3464	-1.701	.2551
.3800	-3.108	.1961	-2.122	.3465	-1.679	.2683
.4000	-3.099	.1278	-2.092	.3452	-1.657	.2807
.4200	-3.100	.06283	-2.065	.3426	-1.635	.2921
.4400	-3.109	.002730	-2.040	.3390	-1.615	.3025
.4600	-3.125	-.05133	-2.018	.3344	-1.595	.3118
.4800	-3.147	-.09851	-1.999	.3291	-1.576	.3199
.5000	-3.173	-.1383	-1.982	.3231	-1.558	.3267
.5500	-3.243	-.2056	-1.949	.3065	-1.518	.3381
.6000	-3.304	-.2333	-1.926	.2884	-1.484	.3415
.6500	-3.341	-.2369	-1.910	.2696	-1.455	.3378
.7000	-3.349	-.2354	-1.898	.2503	-1.431	.3283
.7500	-3.335	-.2452	-1.887	.2303	-1.411	.3147
.8000	-3.311	-.2762	-1.876	.2095	-1.394	.2989
.8500	-3.291	-.3296	-1.865	.1876	-1.378	.2823
.9000	-3.289	-.3987	-1.855	.1650	-1.364	.2661
.9500	-3.309	-.4717	-1.845	.1420	-1.352	.2510
1.000	-3.350	-.5366	-1.838	.1194	-1.341	.2371
1.100	-3.465	-.6105	-1.833	.07747	-1.322	.2123
1.200	-3.554	-.6165	-1.836	.04211	-1.308	.1891
1.300	-3.587	-.6166	-1.842	.01215	-1.298	.1657
1.400	-3.602	-.6592	-1.848	-.01551	-1.292	.1425
1.500	-3.653	-.7279	-1.854	-.04253	-1.287	.1210
1.600	-3.745	-.7716	-1.863	-.06797	-1.284	.1020
1.700	-3.833	-.7683	-1.875	-.09005	-1.282	.08484
1.800	-3.885	-.7464	-1.889	-.1084	-1.282	.06862
1.900	-3.911	-.7458	-1.902	-.1241	-1.284	.05309
2.000	-3.950	-.7704	-1.915	-.1388	-1.286	.03862

TABLE II.- GENERALIZED SINUSOIDAL FORCE AMPLITUDE, $Q_{mn}^{pq}(k)$ or $\bar{Q}_{mn}^{pq}(\omega)$, FOR M=1.2, A=4 (Cont'd)

n=1, q=1; p=1

k	m=0		m=1		m=2	
	Real	Imaginary	Real	Imaginary	Real	Imaginary
0.02000	-1.602	0.05157	-1.695	0.02628	-1.464	0.01180
.04000	-1.585	.09604	-1.689	.05128	-1.461	.02360
.06000	-1.558	.1444	-1.679	.07753	-1.456	.03541
.08000	-1.522	.1817	-1.665	.1017	-1.449	.04723
.1000	-1.478	.2174	-1.648	.1253	-1.440	.05906
.1200	-1.427	.2341	-1.628	.1443	-1.430	.07087
.1400	-1.371	.2489	-1.605	.1631	-1.418	.08267
.1600	-1.313	.2470	-1.580	.1798	-1.404	.09441
.1800	-1.254	.2372	-1.552	.1941	-1.390	.1061
.2000	-1.197	.2148	-1.524	.2060	-1.374	.1176
.2200	-1.143	.1862	-1.495	.2155	-1.357	.1290
.2400	-1.094	.1464	-1.465	.2223	-1.340	.1402
.2600	-1.052	.09847	-1.436	.2271	-1.322	.1511
.2800	-1.018	.04401	-1.407	.2293	-1.303	.1616
.3000	-.9923	-.01536	-1.379	.2295	-1.285	.1717
.3200	-.9764	-.07784	-1.352	.2276	-1.266	.1814
.3400	-.9702	-.1416	-1.327	.2240	-1.248	.1905
.3600	-.9735	-.2048	-1.304	.2183	-1.230	.1990
.3800	-.9859	-.2658	-1.283	.2124	-1.213	.2068
.4000	-1.007	-.3239	-1.264	.2049	-1.196	.2138
.4200	-1.035	-.3748	-1.248	.1965	-1.179	.2201
.4400	-1.068	-.4206	-1.233	.1877	-1.164	.2256
.4600	-1.107	-.4593	-1.221	.1785	-1.149	.2302
.4800	-1.148	-.4905	-1.211	.1691	-1.135	.2339
.5000	-1.191	-.5141	-1.203	.1593	-1.122	.2368
.5500	-1.294	-.5415	-1.190	.1374	-1.093	.2400
.6000	-1.378	-.5330	-1.184	.1176	-1.069	.2382
.6500	-1.430	-.5065	-1.183	.1007	-1.050	.2320
.7000	-1.451	-.4779	-1.183	.08615	-1.034	.2224
.7500	-1.448	-.4634	-1.182	.07295	-1.021	.2107
.8000	-1.434	-.4762	-1.180	.06000	-1.010	.1980
.8500	-1.426	-.5098	-1.176	.04644	-1.000	.1851
.9000	-1.434	-.5564	-1.172	.03190	-.9918	.1727
.9500	-1.463	-.6100	-1.169	.01651	-.9840	.1611
1.000	-1.512	-.6536	-1.168	.0003180	-.9771	.1504
1.100	-1.632	-.6829	-1.172	-.02869	-.9658	.1311
1.200	-1.719	-.6513	-1.182	-.05244	-.9579	.1130
1.300	-1.745	-.6211	-1.193	-.07068	-.9531	.09519
1.400	-1.755	-.6374	-1.202	-.08675	-.9502	.07799
1.500	-1.800	-.6836	-1.210	-.1030	-.9487	.06223
1.600	-1.882	-.6992	-1.221	-.1190	-.9482	.04824
1.700	-1.959	-.6734	-1.234	-.1325	-.9488	.03559
1.800	-1.996	-.6331	-1.248	-.1427	-.9505	.02375
1.900	-2.009	-.6174	-1.260	-.1507	-.9530	.01257
2.000	-2.035	-.6231	-1.272	-.1581	-.9560	.002266

TABLE II.- GENERALIZED SINUSOIDAL FORCE AMPLITUDE, $Q_{mn}^{pq}(k)$ or $\bar{Q}_{mn}^{pq}(\omega)$, FOR M=1.2, A=4 (Cont'd)

n=1, q=1, p=2

k	m=0		m=1		m=2	
	Real	Imaginary	Real	Imaginary	Real	Imaginary
0.02000	-0.9035	0.03071	-1.228	0.02070	-1.155	0.01040
.04000	-.8912	.05973	-1.223	.04105	-1.152	.02077
.06000	-.8712	.08544	-1.215	.06071	-1.148	.03111
.08000	-.8444	.1064	-1.204	.07936	-1.142	.04137
.1000	-.8118	.1212	-1.190	.09672	-1.135	.05155
.1200	-.7749	.1289	-1.174	.1125	-1.126	.06161
.1400	-.7350	.1288	-1.156	.1265	-1.116	.07153
.1600	-.6939	.1204	-1.135	.1386	-1.105	.08126
.1800	-.6531	.1036	-1.114	.1485	-1.092	.09079
.2000	-.6144	.07871	-1.091	.1563	-1.079	.1001
.2200	-.5793	.04622	-1.068	.1620	-1.065	.1090
.2400	-.5492	.007014	-1.045	.1654	-1.051	.1177
.2600	-.5252	-.03780	-1.023	.1668	-1.036	.1260
.2800	-.5083	-.08691	-1.000	.1662	-1.021	.1338
.3000	-.4992	-.1388	-.9793	.1637	-1.005	.1412
.3200	-.4982	-.1921	-.9594	.1596	-.9903	.1481
.3400	-.5052	-.2450	-.9410	.1541	-.9753	.1544
.3600	-.5201	-.2961	-.9244	.1474	-.9607	.1602
.3800	-.5423	-.3440	-.9095	.1398	-.9466	.1653
.4000	-.5708	-.3874	-.8966	.1314	-.9329	.1698
.4200	-.6046	-.4254	-.8856	.1225	-.9199	.1737
.4400	-.6425	-.4570	-.8766	.1134	-.9075	.1769
.4600	-.6832	-.4818	-.8693	.1042	-.8958	.1794
.4800	-.7252	-.4996	-.8638	.09514	-.8849	.1812
.5000	-.7672	-.5105	-.8598	.08637	-.8748	.1824
.5500	-.8637	-.5099	-.8556	.06647	-.8526	.1825
.6000	-.9358	-.4798	-.8568	.05022	-.8348	.1790
.6500	-.9755	-.4373	-.8605	.03764	-.8207	.1726
.7000	-.9841	-.3999	-.8641	.02786	-.8096	.1641
.7500	-.9714	-.3810	-.8662	.01958	-.8005	.1543
.8000	-.9516	-.3868	-.8662	.01146	-.7929	.1439
.8500	-.9389	-.4151	-.8648	.002513	-.7862	.1336
.9000	-.9437	-.4572	-.8628	-.007703	-.7802	.1238
.9500	-.9697	-.5010	-.8613	-.01906	-.7748	.1145
1.000	1.014	-.5349	-.8613	-.03101	-.7699	.1060
1.100	1.121	-.5481	-.8671	-.05359	-.7621	.09043
1.200	1.191	-.5043	-.8780	-.07089	-.7571	.07584
1.300	1.201	-.4676	-.8891	-.08304	-.7544	.06165
1.400	1.198	-.4794	-.8976	-.09349	-.7532	.04812
1.500	1.233	-.5170	-.9051	-.1048	-.7530	.03581
1.600	1.303	-.5292	-.9144	-.1162	-.7534	.02487
1.700	1.366	-.4985	-.9260	-.1256	-.7547	.01496
1.800	1.390	-.4562	-.9382	-.1321	-.7568	.005733
1.900	1.391	-.4402	-.9490	-.1367	-.7596	-.002905
2.000	1.406	-.4507	-.9586	-.1411	-.7626	-.01080

A426

TABLE II.- GENERALIZED SINUSOIDAL FORCE AMPLITUDE, $Q_{mn}^{pq}(k)$ or $\bar{Q}_{mn}^{pq}(\omega)$, FOR M=1.2, A=4 (Cont'd)

n=1, q=2 or n=2, q=1; p=0

k	m=0		m=1		m=2	
	Real	Imaginary	Real	Imaginary	Real	Imaginary
0.02000	-5.560	0.1029	-3.657	0.06068	-2.771	0.03964
.04000	-5.532	.2025	-3.647	.1205	-2.766	.07895
.06000	-5.487	.2958	-3.632	.1788	-2.758	.1176
.08000	-5.425	.3797	-3.610	.2346	-2.747	.1554
.1000	-5.350	.4517	-3.582	.2873	-2.734	.1919
.1200	-5.263	.5098	-3.550	.3363	-2.718	.2268
.1400	-5.167	.5521	-3.513	.3809	-2.699	.2601
.1600	-5.065	.5776	-3.472	.4208	-2.678	.2913
.1800	-4.960	.5858	-3.428	.4556	-2.655	.3204
.2000	-4.855	.5767	-3.382	.4850	-2.630	.3472
.2200	-4.753	.5509	-3.334	.5089	-2.604	.3716
.2400	-4.657	.5095	-3.285	.5274	-2.576	.3935
.2600	-4.570	.4542	-3.236	.5404	-2.548	.4128
.2800	-4.493	.3870	-3.188	.5482	-2.519	.4295
.3000	-4.428	.3102	-3.141	.5510	-2.489	.4438
.3200	-4.376	.2263	-3.095	.5493	-2.460	.4555
.3400	-4.338	.1380	-3.051	.5434	-2.430	.4648
.3600	-4.313	.04777	-3.010	.5338	-2.401	.4718
.3800	-4.302	-.04172	-2.972	.5210	-2.373	.4767
.4000	-4.304	-.1282	-2.937	.5056	-2.345	.4795
.4200	-4.317	-.2096	-2.905	.4881	-2.318	.4805
.4400	-4.339	-.2843	-2.876	.4690	-2.292	.4798
.4600	-4.370	-.3509	-2.850	.4487	-2.267	.4776
.4800	-4.406	-.4086	-2.828	.4279	-2.244	.4740
.5000	-4.445	-.4570	-2.808	.4068	-2.221	.4693
.5500	-4.547	-.5381	-2.771	.3555	-2.171	.4537
.6000	-4.633	-.5723	-2.746	.3089	-2.128	.4344
.6500	-4.686	-.5798	-2.729	.2687	-2.092	.4134
.7000	-4.702	-.5850	-2.716	.2346	-2.061	.3920
.7500	-4.691	-.6076	-2.704	.2049	-2.035	.3711
.8000	-4.671	-.6586	-2.692	.1774	-2.013	.3510
.8500	-4.659	-.7375	-2.679	.1501	-1.993	.3316
.9000	-4.672	-.8345	-2.668	.1218	-1.976	.3127
.9500	-4.714	-.9338	-2.658	.09200	-1.960	.2942
1.000	-4.783	-1.020	-2.652	.06135	-1.946	.2759
1.100	-4.955	-1.116	-2.650	.001582	-1.922	.2397
1.200	-5.087	-1.126	-2.659	-.04994	-1.905	.2047
1.300	-5.144	-1.134	-2.672	-.09185	-1.894	.1719
1.400	-5.183	-1.200	-2.684	-.1287	-1.886	.1418
1.500	-5.274	-1.296	-2.697	-.1648	-1.881	.1140
1.600	-5.415	-1.353	-2.713	-.2001	-1.878	.08786
1.700	-5.548	-1.347	-2.734	-.2314	-1.878	.06331
1.800	-5.630	-1.319	-2.757	-.2571	-1.880	.04049
1.900	-5.679	-1.322	-2.779	-.2786	-1.883	.01953
2.000	-5.749	-1.357	-2.801	-.2983	-1.887	.0003002

TABLE II.- GENERALIZED SINUSOIDAL FORCE AMPLITUDE, $Q_{mn}^{pq}(k)$ or $\bar{Q}_{mn}^{pq}(\omega)$, FOR M=1.2, A=4 (Cont'd)

n=1, q=2 or n=2, q=1; p=1

k	m=0		m=1		m=2	
	Real	Imaginary	Real	Imaginary	Real	Imaginary
0.02000	-1.902	0.04221	-2.272	0.04086	-2.024	0.03034
.04000	-1.884	.08198	-2.265	.08106	-2.020	.06040
.06000	-1.855	.1170	-2.252	.1200	-2.014	.08993
.08000	-1.816	.1451	-2.236	.1569	-2.005	.1187
.1000	-1.768	.1644	-2.215	.1919	-1.994	.1464
.1200	-1.713	.1735	-2.191	.2229	-1.981	.1728
.1400	-1.654	.1712	-2.164	.2509	-1.966	.1978
.1600	-1.592	.1568	-2.133	.2751	-1.949	.2211
.1800	-1.531	.1302	-2.101	.2954	-1.931	.2426
.2000	-1.473	.09169	-2.067	.3114	-1.911	.2623
.2200	-1.419	.04195	-2.032	.3231	-1.890	.2799
.2400	-1.372	-.01783	-1.997	.3306	-1.868	.2954
.2600	-1.333	-.08612	-1.963	.3340	-1.846	.3088
.2800	-1.305	-.1611	-1.929	.3334	-1.823	.3202
.3000	-1.287	-.2408	-1.896	.3291	-1.800	.3295
.3200	-1.281	-.3229	-1.865	.3215	-1.776	.3367
.3400	-1.287	-.4054	-1.836	.3110	-1.754	.3421
.3600	-1.303	-.4860	-1.809	.2979	-1.731	.3456
.3800	-1.331	-.5627	-1.785	.2827	-1.709	.3473
.4000	-1.367	-.6338	-1.764	.2658	-1.688	.3476
.4200	-1.412	-.6977	-1.746	.2478	-1.668	.3463
.4400	-1.463	-.7533	-1.730	.2291	-1.648	.3438
.4600	-1.519	-.7997	-1.717	.2100	-1.630	.3402
.4800	-1.578	-.8365	-1.706	.1909	-1.613	.3356
.5000	-1.637	-.8638	-1.698	.1722	-1.596	.3302
.5500	-1.777	-.8935	-1.686	.1286	-1.560	.3140
.6000	-1.887	-.8810	-1.682	.09170	-1.531	.2957
.6500	-1.957	-.8485	-1.683	.06204	-1.507	.2768
.7000	-1.986	-.8196	-1.685	.03863	-1.487	.2584
.7500	-1.988	-.8126	-1.686	.01939	-1.471	.2410
.8000	-1.979	-.8360	-1.685	.001948	-1.457	.2247
.8500	-1.980	-.8877	-1.683	-.01566	-1.445	.2092
.9000	-2.004	-.9562	-1.680	-.03461	-1.434	.1944
.9500	-2.055	-1.026	-1.678	-.05512	-1.425	.1800
1.000	-2.131	-1.081	-1.679	-.07660	-1.416	.1658
1.100	-2.305	-1.117	-1.689	-.1183	-1.403	.1378
1.200	-2.427	-1.076	-1.707	-.1523	-1.394	.1109
1.300	-2.472	-1.042	-1.725	-.1778	-1.388	.08608
1.400	-2.500	-1.071	-1.741	-.1996	-1.386	.06356
1.500	-2.577	-1.131	-1.756	-.2218	-1.385	.04293
1.600	-2.702	-1.153	-1.774	-.2440	-1.386	.02366
1.700	-2.814	-1.115	-1.795	-.2631	-1.388	.005610
1.800	-2.872	-1.062	-1.817	-.2774	-1.392	-.01105
1.900	-2.900	-1.044	-1.838	-.2883	-1.397	-.02619
2.000	-2.948	-1.059	-1.857	-.2984	-1.402	-.03993

A
4
2
6

TABLE II.- GENERALIZED SINUSOIDAL FORCE AMPLITUDE, $Q_{mn}^{pq}(k)$ or $\bar{Q}_{mn}^{pq}(\omega)$, FOR M=1.2, A=4 (Cont'd)

n=1, q=2 or n=2, q=1; p=2

k	m=0		m=1		m=2	
	Real	Imaginary	Real	Imaginary	Real	Imaginary
0.02000	-0.01016	0.02116	-1.633	0.03035	-1.591	0.02449
.04000	-.01003	.04039	-1.627	.06014	-1.588	.04874
.06000	-.9816	.05586	-1.618	.08883	-1.583	.07253
.08000	-.9532	.06587	-1.604	.1159	-1.575	.09564
.1000	-.9190	.06900	-1.588	.1409	-1.566	.1179
.1200	-.8806	.06409	-1.569	.1635	-1.555	.1390
.1400	-.8396	.05034	-1.547	.1831	-1.543	.1589
.1600	-.7979	.02735	-1.523	.1997	-1.529	.1773
.1800	-.7576	-.004910	-1.498	.2129	-1.513	.1943
.2000	-.7204	-.04606	-1.471	.2227	-1.497	.2096
.2200	-.6882	-.09536	-1.444	.2291	-1.479	.2232
.2400	-.6625	-.1517	-1.417	.2319	-1.461	.2350
.2600	-.6446	-.2137	-1.391	.2315	-1.443	.2450
.2800	-.6355	-.2797	-1.365	.2280	-1.424	.2533
.3000	-.6359	-.3480	-1.341	.2215	-1.405	.2599
.3200	-.6460	-.4167	-1.318	.2125	-1.386	.2647
.3400	-.6657	-.4839	-1.298	.2013	-1.368	.2680
.3600	-.6944	-.5479	-1.279	.1882	-1.350	.2697
.3800	-.7315	-.6071	-1.263	.1737	-1.332	.2701
.4000	-.7756	-.6599	-1.248	.1580	-1.315	.2691
.4200	-.8255	-.7053	-1.237	.1417	-1.299	.2671
.4400	-.8796	-.7424	-1.227	.1251	-1.284	.2639
.4600	-.9360	-.7709	-1.220	.1086	-1.269	.2600
.4800	-.9933	-.7904	-1.215	.09231	-1.256	.2552
.5000	-1.050	-.8014	-1.212	.07667	-1.243	.2499
.5500	-1.176	-.7953	-1.210	.04146	-1.216	.2347
.6000	-1.269	-.7555	-1.215	.01317	-1.194	.2183
.6500	-1.320	-.7039	-1.222	-.008119	-1.177	.2019
.7000	-1.332	-.6622	-1.229	-.02380	-1.163	.1863
.7500	-1.319	-.6464	-1.233	-.03606	-1.152	.1718
.8000	-1.301	-.6625	-1.234	-.04722	-1.143	.1585
.8500	-1.294	-.7062	-1.234	-.05910	-1.135	.1461
.9000	-1.312	-.7652	-1.233	-.07269	-1.127	.1343
.9500	-1.357	-.8236	-1.233	-.08805	-1.121	.1228
1.000	-1.424	-.8666	-1.236	-.1045	-1.115	.1114
1.100	-1.577	-.8791	-1.248	-.1362	-1.106	.08883
1.200	-1.673	-.8210	-1.266	-.1609	-1.101	.06721
1.300	-1.694	-.7783	-1.284	-.1779	-1.098	.04742
1.400	-1.701	-.8005	-1.298	-.1923	-1.098	.02967
1.500	-1.762	-.8519	-1.311	-.2078	-1.099	.01350
1.600	-1.867	-.8647	-1.327	-.2238	-1.101	-.001603
1.700	-1.958	-.8205	-1.346	-.2371	-1.104	-.01574
1.800	-1.995	-.7644	-1.365	-.2461	-1.108	-.02873
1.900	-2.004	-.7454	-1.382	-.2524	-1.113	-.04043
2.000	-2.035	-.7600	-1.398	-.2583	-1.118	-.05097

TABLE II.- GENERALIZED SINUSOIDAL FORCE AMPLITUDE, $Q_{mn}^{pq}(k)$ or $\bar{Q}_{mn}^{pq}(\omega)$, FOR M=1.2, A=4 (Cont'd)

n=2, q=2, p=0

k	m=0		m=1		m=2	
	Real	Imaginary	Real	Imaginary	Real	Imaginary
0.02000	-7.556	0.09096	-5.255	0.07152	-4.085	0.05105
.04000	-7.513	.1771	-5.237	.1416	-4.075	.1015
.05000	-7.462	.2561	-5.217	.2098	-4.065	.1511
.08000	-7.393	.3241	-5.190	.2750	-4.051	.1996
.1000	-7.310	.3782	-5.157	.3363	-4.033	.2464
.1200	-7.213	.4158	-5.116	.3929	-4.012	.2912
.1400	-7.108	.4350	-5.071	.4441	-3.987	.3338
.1600	-6.997	.4347	-5.021	.4893	-3.960	.3738
.1800	-6.884	.4144	-4.967	.5281	-3.930	.4109
.2000	-6.773	.3743	-4.910	.5602	-3.897	.4451
.2200	-6.667	.3152	-4.851	.5855	-3.863	.4760
.2400	-6.569	.2388	-4.792	.6039	-3.827	.5037
.2600	-6.483	.1471	-4.732	.6156	-3.790	.5281
.2800	-6.410	.04270	-4.673	.6208	-3.753	.5491
.3000	-6.353	-.07144	-4.616	.6200	-3.714	.5668
.3200	-6.312	-.1922	-4.560	.6136	-3.676	.5813
.3400	-6.288	-.3163	-4.508	.6021	-3.638	.5926
.3600	-6.282	-.4407	-4.459	.5861	-3.600	.6010
.3800	-6.291	-.5621	-4.414	.5664	-3.563	.6065
.4000	-6.315	-.6781	-4.372	.5435	-3.527	.6094
.4200	-6.351	-.7861	-4.335	.5182	-3.492	.6099
.4400	-6.399	-.8843	-4.301	.4911	-3.458	.6083
.4600	-6.455	-.9712	-4.272	.4628	-3.426	.6046
.4800	-6.516	-1.046	-4.246	.4339	-3.395	.5993
.5000	-6.581	-1.109	-4.225	.4049	-3.366	.5925
.5500	-6.739	-1.215	-4.184	.3348	-3.301	.5704
.6000	-6.869	-1.264	-4.158	.2714	-3.245	.5436
.6500	-6.952	-1.284	-4.141	.2164	-3.198	.5146
.7000	-6.987	-1.308	-4.129	.1690	-3.158	.4851
.7500	-6.991	-1.358	-4.117	.1268	-3.124	.4560
.8000	-6.986	-1.447	-4.105	.08683	-3.095	.4279
.8500	-6.998	-1.572	-4.092	.04661	-3.069	.4005
.9000	-7.044	-1.716	-4.081	.004684	-3.046	.3737
.9500	-7.130	-1.858	-4.074	-.03914	-3.025	.3472
1.000	-7.251	-1.978	-4.070	-.08398	-3.007	.3208
1.100	-7.528	-2.109	-4.078	-.1707	-2.977	.2683
1.200	-7.736	-2.128	-4.101	-.2454	-2.956	.2176
1.300	-7.843	-2.156	-4.127	-.3069	-2.942	.1698
1.400	-7.935	-2.264	-4.152	-.3619	-2.934	.1257
1.500	-8.102	-2.405	-4.178	-.4161	-2.930	.08465
1.600	-8.336	-2.483	-4.210	-.4686	-2.929	.04596
1.700	-8.549	-2.472	-4.249	-.5149	-2.932	.009517
1.800	-8.687	-2.436	-4.289	-.5530	-2.937	-.02441
1.900	-8.785	-2.447	-4.328	-.5852	-2.945	-.05565
2.000	-8.915	-2.499	-4.366	-.6148	-2.954	-.08437

A426

TABLE II.- GENERALIZED SINUSOIDAL FORCE AMPLITUDE, $Q_{mn}^{pq}(k)$ or $\bar{Q}_{mn}^{pq}(\omega)$, FOR M=1.2, A=4 (Cont'd)

n=2, q=2; p=1

k	m=0		m=1		m=2	
	Real	Imaginary	Real	Imaginary	Real	Imaginary
0.02000	-2.300	0.01945	-3.213	0.04599	-2.967	0.03850
.04000	-2.276	.03646	-3.200	.09088	-2.959	.07649
.06000	-2.244	.04623	-3.185	.1343	-2.951	.1139
.08000	-2.203	.04907	-3.165	.1752	-2.940	.1502
.1000	-2.153	.04185	-3.140	.2131	-2.926	.1852
.1200	-2.097	.02287	-3.111	.2473	-2.909	.2185
.1400	-2.037	-.009053	-3.077	.2772	-2.889	.2499
.1600	-1.976	-.05455	-3.041	.3024	-2.867	.2792
.1800	-1.917	-.1137	-3.002	.3225	-2.843	.3062
.2000	-1.863	-.1859	-2.961	.3377	-2.818	.3307
.2200	-1.815	-.2703	-2.920	.3474	-2.791	.3525
.2400	-1.777	-.3651	-2.878	.3520	-2.762	.3717
.2600	-1.751	-.4685	-2.837	.3515	-2.733	.3882
.2800	-1.737	-.5781	-2.797	.3463	-2.704	.4019
.3000	-1.737	-.6915	-2.758	.3366	-2.674	.4130
.3200	-1.752	-.8058	-2.722	.3229	-2.645	.4214
.3400	-1.780	-.9184	-2.689	.3053	-2.615	.4274
.3600	-1.823	-1.027	-2.659	.2856	-2.586	.4310
.3800	-1.877	-1.129	-2.632	.2632	-2.558	.4324
.4000	-1.943	-1.222	-2.607	.2383	-2.531	.4318
.4200	-2.017	-1.304	-2.589	.2132	-2.505	.4294
.4400	-2.098	-1.375	-2.572	.1869	-2.480	.4253
.4600	-2.183	-1.434	-2.559	.1606	-2.457	.4198
.4800	-2.270	-1.480	-2.549	.1342	-2.435	.4130
.5000	-2.356	-1.514	-2.542	.1087	-2.414	.4052
.5500	-2.556	-1.550	-2.533	.04961	-2.368	.3825
.6000	-2.711	-1.535	-2.535	-.0003845	-2.330	.3571
.6500	-2.811	-1.501	-2.542	-.04086	-2.300	.3310
.7000	-2.859	-1.477	-2.550	-.07351	-2.275	.3056
.7500	-2.874	-1.485	-2.555	-.1012	-2.254	.2813
.8000	-2.881	-1.534	-2.557	-.1271	-2.237	.2584
.8500	-2.905	-1.618	-2.558	-.1536	-2.222	.2366
.9000	-2.962	-1.721	-2.559	-.1822	-2.208	.2155
.9500	-3.057	-1.819	-2.561	-.2127	-2.196	.1948
1.000	-3.181	-1.894	-2.567	-.2444	-2.185	.1743
1.100	-3.449	-1.938	-2.590	-.3049	-2.169	.1336
1.200	-3.636	-1.883	-2.623	-.3541	-2.159	.09454
1.300	-3.716	-1.849	-2.656	-.3918	-2.155	.05831
1.400	-3.783	-1.902	-2.685	-.4248	-2.154	.02528
1.500	-3.924	-1.989	-2.713	-.4584	-2.156	-.005183
1.600	-4.126	-2.014	-2.746	-.4919	-2.159	-.03376
1.700	-4.301	-1.957	-2.783	-.5197	-2.165	-.06057
1.800	-4.399	-1.883	-2.821	-.5408	-2.173	-.08535
1.900	-4.456	-1.862	-2.856	-.5573	-2.183	-.1079
2.000	-4.549	-1.884	-2.889	-.5726	-2.193	-.1284

A425

TABLE II.- GENERALIZED SINUSOIDAL FORCE AMPLITUDE, $Q_{mn}^{pq}(k)$ or $\bar{Q}_{mn}^{pq}(\omega)$, FOR M=1.2, A=4 (Concluded)

n=2, q=2; p=2

k	m=0		m=1		m=2	
	Real	Imaginary	Real	Imaginary	Real	Imaginary
0.02000	-1.130	-0.001026	-2.288	0.03301	-2.324	0.03075
.04000	-1.113	-.004691	-2.278	.06512	-2.318	.06107
.06000	-1.092	-.01246	-2.266	.09598	-2.311	.09084
.08000	-1.063	-.02638	-2.251	.1248	-2.301	.1197
.1000	-1.030	-.04808	-2.231	.1512	-2.289	.1475
.1200	-.9922	-.07879	-2.208	.1744	-2.275	.1738
.1400	-.9533	-.1193	-2.182	.1941	-2.259	.1985
.1600	-.9152	-.1700	-2.154	.2100	-2.241	.2214
.1800	-.8801	-.2308	-2.123	.2219	-2.221	.2423
.2000	-.8500	-.3011	-2.092	.2295	-2.200	.2611
.2200	-.8271	-.3797	-2.061	.2329	-2.178	.2776
.2400	-.8131	-.4653	-2.029	.2322	-2.155	.2919
.2600	-.8093	-.5560	-1.998	.2274	-2.131	.3039
.2800	-.8168	-.6499	-1.969	.2189	-2.107	.3137
.3000	-.8361	-.7447	-1.941	.2070	-2.083	.3212
.3200	-.8674	-.8381	-1.916	.1921	-2.059	.3265
.3400	-.9101	-.9279	-1.893	.1747	-2.035	.3298
.3600	-.9636	-1.012	-1.873	.1551	-2.012	.3311
.3800	-1.026	-1.088	-1.855	.1339	-1.990	.3307
.4000	-1.097	-1.156	-1.841	.1117	-1.968	.3286
.4200	-1.174	-1.213	-1.829	.08881	-1.948	.3251
.4400	-1.255	-1.258	-1.821	.06578	-1.929	.3202
.4600	-1.337	-1.292	-1.815	.04302	-1.910	.3143
.4800	-1.419	-1.315	-1.812	.02089	-1.893	.3075
.5000	-1.498	-1.326	-1.811	-.0003030	-1.878	.2999
.5500	-1.673	-1.314	-1.816	-.04767	-1.844	.2786
.6000	-1.798	-1.263	-1.827	-.08566	-1.816	.2558
.6500	-1.867	-1.203	-1.841	-.1146	-1.795	.2332
.7000	-1.888	-1.161	-1.853	-.1365	-1.778	.2116
.7500	-1.881	-1.156	-1.862	-.1545	-1.764	.1916
.8000	-1.871	-1.193	-1.868	-.1716	-1.753	.1729
.8500	-1.882	-1.264	-1.871	-.1900	-1.743	.1553
.9000	-1.927	-1.352	-1.873	-.2108	-1.734	.1384
.9500	-2.008	-1.433	-1.878	-.2339	-1.726	.1218
1.000	-2.117	-1.490	-1.885	-.2583	-1.719	.1053
1.100	-2.348	-1.499	-1.909	-.3043	-1.709	.07253
1.200	-2.491	-1.420	-1.941	-.3399	-1.704	.04109
1.300	-2.532	-1.372	-1.972	-.3652	-1.703	.01222
1.400	-2.565	-1.414	-1.998	-.3872	-1.705	-.01384
1.500	-2.676	-1.488	-2.023	-.4109	-1.708	-.03774
1.600	-2.845	-1.500	-2.051	-.4348	-1.713	-.06016
1.700	-2.984	-1.432	-2.083	-.4543	-1.720	-.08117
1.800	-3.046	-1.355	-2.116	-.4677	-1.728	-.1005
1.900	-3.073	-1.332	-2.146	-.4773	-1.738	-.1179
2.000	-3.137	-1.354	-2.173	-.4864	-1.747	-.1337

A
4
2
6