N62 12756

NASA TN D-1359

NASA TN D-1359

# TECHNICAL NOTE

D-1359

## A WIND-TUNNEL INVESTIGATION OF PRESSURE FLUCTUATIONS ON THE UPPER VERTICAL TAIL OF THE X-15 WHEN MATED TO THE B-52 CARRIER AIRPLANE

By John W. McKee and Thomas A. Byrdsong

Langley Research Center
Langley Station, Hampton, Va.

NATIONAL AERONAUTICS AND SPACE ADMINISTRATION

WASHINGTON June 1962

1K

NATIONAL AERONAUTICS AND SPACE ADMINISTRATION

TECHNICAL NOTE D-1359

# A WIND-TUNNEL INVESTIGATION OF PRESSURE FLUCTUATIONS ON THE UPPER VERTICAL TAIL OF THE X-15 WHEN MATED TO THE B-52 CARRIER AIRPLANE

By John W. McKee and Thomas A. Byrdsong

L
2
0
2
8

## SUMMARY

A wind-tunnel investigation has been made to obtain the characteristics of the fluctuating pressures acting on the upper vertical tail of the X-15 airplane when carried by the B-52 airplane, the tail passing through a large notch in the trailing edge of the B-52 wing. The effects of various modifications in the vicinity of the notch that were made in an effort to lower the magnitude of the pressure fluctuations are presented.

The predominant frequency of the fluctuating pressures on the notch faces from flight and model tests were approximately the same when scaled to a common basis. The root-mean-square values of the pressure fluctuations on the X-15 upper vertical tail obtained with the original configuration were very much higher than those obtained when the same tail surface was tested in unobstructed flow. The root-mean-square values of the fluctuating tail pressures were reduced by modifications such as wing notch covers that created a "cleaner" aerodynamic configuration but were generally not reduced by modifications such as spoilers in the vicinity of the wing notch that were intended to create a region of "dead" air at the tail.

## INTRODUCTION

In captive flight the X-15 airplane is carried on a rather blunt pylon under the wing of a B-52 airplane, the X-15 upper vertical tail passing through a notch in the trailing edge of the B-52 wing. After the third captive flight an examination of the X-15 revealed internal damage to the upper vertical tail surface. The nature of the damage and of the general arrangement of the configuration suggested that pressure fluctuations were a probable cause of the problem. To establish the magnitude and frequency of fluctuating pressures and to identify their source, pressure transducers were installed in the B-52 wing in

the vicinity of the notch and measurements of pressure fluctuations were made in flight. Data obtained with and without the X-15 in place indicated that the wing notch was the primary source of the pressure fluctuations. Pressure fluctuations with large amplitudes were found to be present at orifices on both the inboard and outboard faces of the notch and their amplitude was primarily a function of flight dynamic pressure.

To aid in devising a modification that would reduce the pressure fluctuations, tests were made in the Langley 300-MPH 7- by 10-foot tunnel by using 0.049-scale models of the B-52 and X-15 with pressure transducers installed in the wing notch and X-15 upper vertical tail. The data from the wind-tunnel tests are presented in this report in terms of root-mean-square values of the fluctuating pressures and power spectral densities of some of the data.

L
2
0
2
8

Although the flight problem was solved by the use of more rugged construction of the upper vertical tail and a change of flight profile to perform the climb-to-launch altitude at a lower dynamic pressure, it is thought that the data are of interest in indicating the magnitudes of some unsteady loads on the original configuration and in illustrating the effect of various modifications.

## SYMBOLS

| | |
|---|---|
| $\Delta C_p$ | fluctuating pressure coefficient, $\frac{\sqrt{\overline{p^2}}}{q}$ |
| $\sqrt{\overline{p^2}}$ | root-mean-square value of pressure fluctuations from the mean, lb/sq ft |
| q | dynamic pressure, lb/sq ft |
| fb/V | Strouhal number |
| f | frequency, cycles/sec |
| b | diameter, ft |
| V | free-stream velocity, ft/sec |
| t | thickness |

## DESCRIPTION OF MODELS

The general arrangement of the 0.049-scale models of the B-52 and X-15 airplanes is shown in figure 1 and the relative positions of the B-52 wing, wing notch, support pylon, and X-15 are shown in figure 2. As shown in figure 1, the B-52 model did not have engine pods or tail surfaces. The wing root angle of incidence of the B-52 model was $6^{\circ}$ relative to the fuselage reference line, and the angle of incidence of the X-15 model was $2^{\circ}$ relative to the B-52 fuselage. The vertical-tail airfoil section of the X-15 model was a wedge having a $10^{\circ}$ included angle at the leading edge. Also shown on figure 2 are the locations of pressure transducers in the upper vertical tail surface of the X-15 model and in the B-52 model wing notch. The locations of the pressure transducers in the B-52 model wing notch (fig. 2) corresponded to the orifice locations that had been used in the flight tests except that the inboard gage was positioned somewhat forward to have sufficient wing thickness to accommodate the transducer.

L
2
0
2
8

Several modifications to the original B-52 and X-15 models were investigated. The modifications were intended to effect changes in the flow about the upper vertical tail of the X-15 model and in the B-52 model wing notch. The modifications, some of which are designated as configurations A to E, are described in table I and shown in figure 3.

## INSTRUMENTATION AND DATA REDUCTION

Shown in figure 4 is a schematic of the instrumentation used to obtain the fluctuating pressure data. The pressure transducers were model 53-T NACA miniature electrical pressure gages similar to the model 49-TP gage described in reference 1; they were flush mounted with their reference side connected to a static reference source. The acoustical and mechanical resonance frequencies of the gages were approximately 12,000 cps and their frequency response was essentially flat to approximately 4,000 cycles per second.

The output of the pressure gages was amplified by a 20-kilocycle carrier amplifier. A 27-kilocycle frequency-modulated tape recorder was used to record the amplified pressure signal; a calibrate signal of 1,000 cycles per second at 1 volt was also recorded periodically. Time-history records were obtained from playbacks of the data to an oscillograph. Example records are shown in figure 5.

The randomly fluctuating data as recorded on magnetic tape were reduced to power spectral density by the use of an electronic analog analyzer as described in reference 2 for selected representative cases.

The data were analyzed in the frequency range from 0 to 4,000 cycles per second using a 60-cycle-per-second band-pass filter. Because of the inherent limitations in the data-reduction equipment, the analysis from zero frequency to approximately 120 cycles per second should be considered as relatively inaccurate.

Root-mean-square values of the pressure fluctuations from the mean were obtained by an overall electronic analysis of the tape recordings and converted to fluctuating pressure coefficient $\Delta C_p$ by dividing by the free-stream dynamic pressure.

L
2
0
2
8

## TESTS

The tests were made in the Langley 300-MPH 7- by 10-foot tunnel. All tests were made at a dynamic pressure of 100 pounds per square foot, corresponding to an airspeed of about 290 feet per second and a Reynolds number per foot of $1.8 \times 10^6$ except for one test made at a dynamic pressure of 50 pounds per square foot (205 ft/sec). The B-52 fuselage reference line was set at an angle of attack of $0^\circ$ and an angle of sideslip of $0^\circ$ for all tests.

## RESULTS AND DISCUSSION

The root-mean-square pressure data are presented in figures 6 and 7 in bar graph form, the data for the various tail and notch transducers being arranged in their relative positions as viewed from the rear. It will be seen that in some instances more than one value is presented for individual gages; these values were obtained from tests that were repeated.

The power spectral densities that were obtained from selected data samples are presented in figure 8. Parts (a) to (l) of figure 8 correspond to the oscillograph records (a) to (l) of figure 5.

### Inverted Tail

The data for the inverted-tail modification (see table I) were obtained to provide a measure of the minimum or background level of pressure fluctuations. The data were obtained with essentially undisturbed flow past the tail because the instrumented upper vertical tail was mounted in the position of the lower vertical tail.

The fluctuating pressure coefficients (fig. 6(a)) were all less than 0.01, or the root-mean-square values of the pressure fluctuations were all less than 1 percent of the free-stream dynamic pressure.

The power spectral density for the middle outboard gage, typical of all gages for this configuration, is shown in figure 8(a) and the corresponding oscillograph record in figure 5(a).

A very low level of power is shown through most of the frequency range up to 4,000 cycles per second. Increased power of the pressure fluctuations is shown near zero frequency. As previously mentioned, the data analysis at very low frequencies is subject to some loss of accuracy.

## Tail Alone in Notch

The root-mean-square data obtained with the isolated X-15 upper tail held in position in the notch (support pylon and X-15 removed) are shown in figure 6(b); power spectral densities, in figures 8(b) to 8(g); and oscillograph records, in figures 5(b) to 5(g). High levels of pressure fluctuations are shown (fig. 6(b)) particularly for the inboard side of the notch and the middle-inboard tail gage. It is very noticeable on some of the oscillograph records (see fig. 5(b), inboard notch) that the pressure data had a periodic content with very sharp pressure peaks at a frequency of about 900 cycles per second. The spectral analyses (figs. 8(b) to 8(g)) all show this periodic content with a peak response at 930 cycles per second. The spectral analyses of pressures on the inboard side also show peaks at harmonic values of the fundamental frequency. The multiple peaks were obtained because the pressure fluctuations were not sine waves but were characterized by very sharp peaks. An exact response to the indicated type of pressure fluctuations would require a gage response flat to a very high frequency. The characteristics as presented do therefore include to some extent unknown distortions.

It is apparent that with the tail surface in the wing notch, radically different pressure fluctuations on the tail were obtained compared with those with the inverted tail. The maximum values of the fluctuating pressure coefficient (on the tail) for these two cases were 0.1192 and 0.0091, respectively.

## Original Configuration

The root-mean-square data obtained with the original configuration are shown in figure 6(c) and figure 6(d); spectral analyses, in figure 8(h) to figure 8(k); and oscillograph records, in figure 5(h) to figure 5(k). The data obtained with a dynamic pressure of 50 pounds

per square foot (fig. 6(d)) show values of the fluctuating pressure coefficient approximately equal to those obtained with a dynamic pressure of 100 pounds per square foot (fig. 6(c)).

The fluctuating pressure coefficients of the original configuration (complete models and pylon, fig. 6(c)) were very different from those with the tail alone in the notch (fig. 6(b)), and rather than having sharp peaks, the spectral analyses (figs. 8(h) to 8(k)) show relatively broad single peaks with maximum values falling between 650 and 1,050 cycles per second. The largest fluctuations were present at the top outboard tail gage rather than the inboard notch gage. The oscillograph records (figs. 5(h) to 5(k)) also show less evidence of regularly spaced peaks.

L
2
0
2
8

## Comparison of Model and Flight Results

The flight data of the fluctuating pressures on the notch faces which were obtained as film records at the NASA Flight Research Center were not suitable for analysis to obtain root-mean-square values or power spectral densities. An example film record is shown in figure 9. Effective peak-to-peak values of the pressure fluctuations were determined arbitrarily, as shown by the horizontal lines in figure 9, for records obtained with and without the X-15 attached to the pylon for many flight conditions: Mach number of 0.34 to 0.84, altitude of 10,000 feet to 50,000 feet, dynamic pressure of 77 pounds per square foot to 288 pounds per square foot, and normal load factor of 1.0 to 1.6. The flight values of these peak-to-peak pressure fluctuations are shown in figure 10. It can be seen that all the data correlate reasonably well with dynamic pressure, the peak-to-peak pressures for the inboard notch face averaging somewhat higher than 40 percent of the dynamic pressure and the outboard somewhat lower.

Peak-to-peak values of the pressure fluctuations on the notch faces were determined from the oscillograph records (figs. 5(h) and 5(j)) obtained from the model tests of the original configuration (B-52 with X-15); these values are shown on figure 10 to be only one-third to one-half as great as flight data. It is not known why the difference shown between pressures obtained from flight and model tests should exist but the big difference between the Reynolds numbers of flight and model tests could be a contributing factor.

The example flight film record (fig. 9) shows definite indications of sharp-peaked periodic pressure fluctuations, particularly for the inboard notch face, and in general appearance (except for the frequency of the fluctuations) this flight record closely resembles the model record of figure 5(b) which was obtained with the tail alone in the notch. The frequency of the pressure fluctuations shown on the flight record is approximately 100 cycles per second, and the record was obtained

at a flight speed of about 700 feet per second. If the frequency was a function of velocity divided by a characteristic length, the model frequency of 930 cycles per second (fig. 8(b)) would correspond

$\left(930 \times \frac{0.049}{1.0} \times \frac{700}{290}\right)$ to a flight frequency of 110 cycles per second.

The periodic content of the pressure fluctuations might have resulted from an alternate shedding of a double row of vortices from the upper and lower surface of the B-52 wing at the front face of the notch. Von Karman has shown (ref. 3) that such a vortex system is stable when the distance between the vortex rows equals 0.281 times the distance between successive vortices in each row. If the assumption is made that the distance between the vortex rows would be equal to the average depth of the front face of the notch and that the vortices would move downstream at free-stream velocity, the resultant vortex frequency (in each row) would be 930 cycles per second for the conditions of the model tests. Some experimental measurements of the frequency of vortices shed by cylinders are given in reference 4. The Strouhal number $fb/V$ at subcritical Reynolds numbers (high drag coefficient, maximum flow separation) was found to be approximately 0.2. Assuming that flow separation at the front of the notch would be a condition comparable to separation from a cylinder with a diameter equal to the average wing thickness at the notch would result in a frequency of 660 cycles per second for the conditions of the model tests. From comparison of the frequency of the pressure fluctuations obtained in the model tests with values obtained experimentally and theoretically for the frequency of alternately shed vortices, it seems that such a flow condition may indeed have been the source of the periodic fluctuations.

## Other Configurations

The root-mean-square pressure data for the other model configurations are presented in bar graph form in figures 6(e) to 6(i) and figure 7. Modifying the original configuration by refairing (as shown in fig. 3) the blunt aft end of the pylon had some effect on the results for all gages (compare fig. 6(e) with fig. 6(c)), the most significant effect being a large reduction for the top outboard gage. The general effect of the faired pylon on the power-spectral-density results, except for the outboard notch gage which was relatively unaffected and for the top outboard gage, was to produce a somewhat sharper peak than that of the original configuration (figs. 8(h) to 8(k)) at approximately 700 to 800 cycles per second. The power spectral densities for the top outboard gage, with (fig. 8(l)) and without the pylon fairing, were very similar in appearance except for a general lowering with the faired pylon.

Comparison of figures 6(f) and 6(g) with figure 6(c) shows that, although no major reductions of the fluctuating pressures were obtained by the use of a top cover on the notch, a large reduction of the top outboard value was obtained when, in addition, the pylon was faired. The effect obtained with the pylon fairing (compare figs. 8(m) and 8(n)) was the elimination of a broad peak at 2,000 cycles per second resulting in a power spectral density with most of the area at the low-frequency end of the curve.

With the top and bottom notch covers (figs. 6(h) and 6(i)), the fluctuating pressures of the gages that remained exposed to the airstream were reduced, and again the pylon fairing lowered the values for the top outboard gage. The effect of the pylon fairing on the power spectral density was similar to that obtained with the top cover, elimination of a broad peak at 2,000 cycles per second.

L
2
0
2
8

Although it would seem that the B-52 wing discontinuity (the notch) and the bluntness of the pylon would be the sources exciting pressure fluctuations, it is difficult to visualize how the effects of the pylon fairing on the top outboard gage, with and without notch covers, could have been created.

In figure 7 the fluctuating pressure coefficients of configurations A, B, C, D, and E are compared with the average values of the original configuration. Although low-speed tuft studies made with some of these configurations seemed to indicate that an effective region of low-energy air had been created in the area around the notch and tail, none of the configurations show much general reduction in the pressure fluctuations.

## CONCLUDING REMARKS

From the results of an investigation of the fluctuating pressures acting on the upper vertical tail of the X-15 airplane when carried by the B-52 airplane, the tail passing through a large notch in the trailing edge of the B-52 wing, the following conclusions can be drawn:

1. The predominant frequency of the fluctuating pressures on the notch faces from flight and model tests were approximately the same when scaled to a common basis.

2. The pressure fluctuations on the X-15 upper tail obtained with the original configuration were very much higher than those obtained when the same tail surface was tested in unobstructed flow.

3. The fluctuating tail pressures were reduced by modifications such as wing notch covers that created a "cleaner" aerodynamic

configuration but were generally not reduced by modifications such as spoilers in the vicinity of the wing notch that were intended to create a region of "dead" air at the tail.

Langley Research Center,
National Aeronautics and Space Administration,
Langley Station, Hampton, Va., April 9, 1962.

L
2
0
2
3

## REFERENCES


1. Patterson, John L.: A Miniature Electrical Pressure Gage Utilizing a Stretched Flat Diaphragm. NACA TN 2659, 1952.

2. Smith, Francis B.: Analog Equipment for Processing Randomly Fluctuating Data. Aero. Eng. Rev., vol. 14, no. 5, May 1955, pp. 113-119.

3. Von Kármán, Th., and Burgers, J. M.: Theory of the Wake. General Aerodynamic Theory - Perfect Fluids. Vol. II of Aerodynamic Theory, div. E, ch. VII, sec. 6, W. F. Durand, ed., Julius Springer (Berlin), 1935, pp. 342-345.

4. Delany, Noel K., and Sorensen, Norman E.: Low-Speed Drag of Cylinders of Various Shapes. NACA TN 3038, 1953.

TABLE I.- DESCRIPTION OF MODEL MODIFICATIONS

| Modification | Description |
|---|---|
| Original | Pylon attachment of X-15 model to lower surface of right wing of B-52 model. The X-15 upper vertical tail extended through a notch in the B-52 wing. (See figs. 1 and 2.) |
| Top cover | A thin metal plate on the upper surface of the B-52 wing which covered the notch and was cut to a close fit around the X-15 vertical tail. |
| Bottom cover | A thin metal plate on the lower surface of the B-52 wing which covered the notch and was cut to a close fit around the X-15 vertical tail. |
| Inverted tail | The lower vertical tail of the X-15 was removed and the instrumented upper surface (inverted) was installed in its place. There was no notch in the B-52 wing. |
| Tail alone | The X-15 model and support pylon were removed. The X-15 upper tail surface was held in position in the notch by a downstream support bracket fastened to the B-52 fuselage. |
| Faired pylon | The blunt aft end of the pylon was refaired with modeling clay extending back onto the X-15 tail. (See fig. 3.) |
| Configuration A | Original configuration with aft end of pylon reshaped with modeling clay so that it terminated abruptly with a squared-off end. (See fig. 3.) |
| Configuration B | Configuration A with the addition of a solid spoiler on the upper surface of the B-52 wing ahead of the notch. (See fig. 3.) |
| Configuration C | Original configuration with spoilers on the sides of the pylon. The spoilers were made of 1/8-inch-thick metal perforated with 1/8-inch-diameter holes with a 3/16-inch spacing. (See fig. 3.) |
| Configuration D | Original configuration with serrated spoilers ahead of the notch on both the upper and lower surface of the B-52 wing and on the pylon. (See fig. 3.) |
| Configuration E | Original configuration with a wedge of screen wire in the wing notch and side walls of screen wire on each side of the pylon. The screen wire had 40 × 40 wires per inch of 0.010-inch diameter. (See fig. 3.) |

L-2028

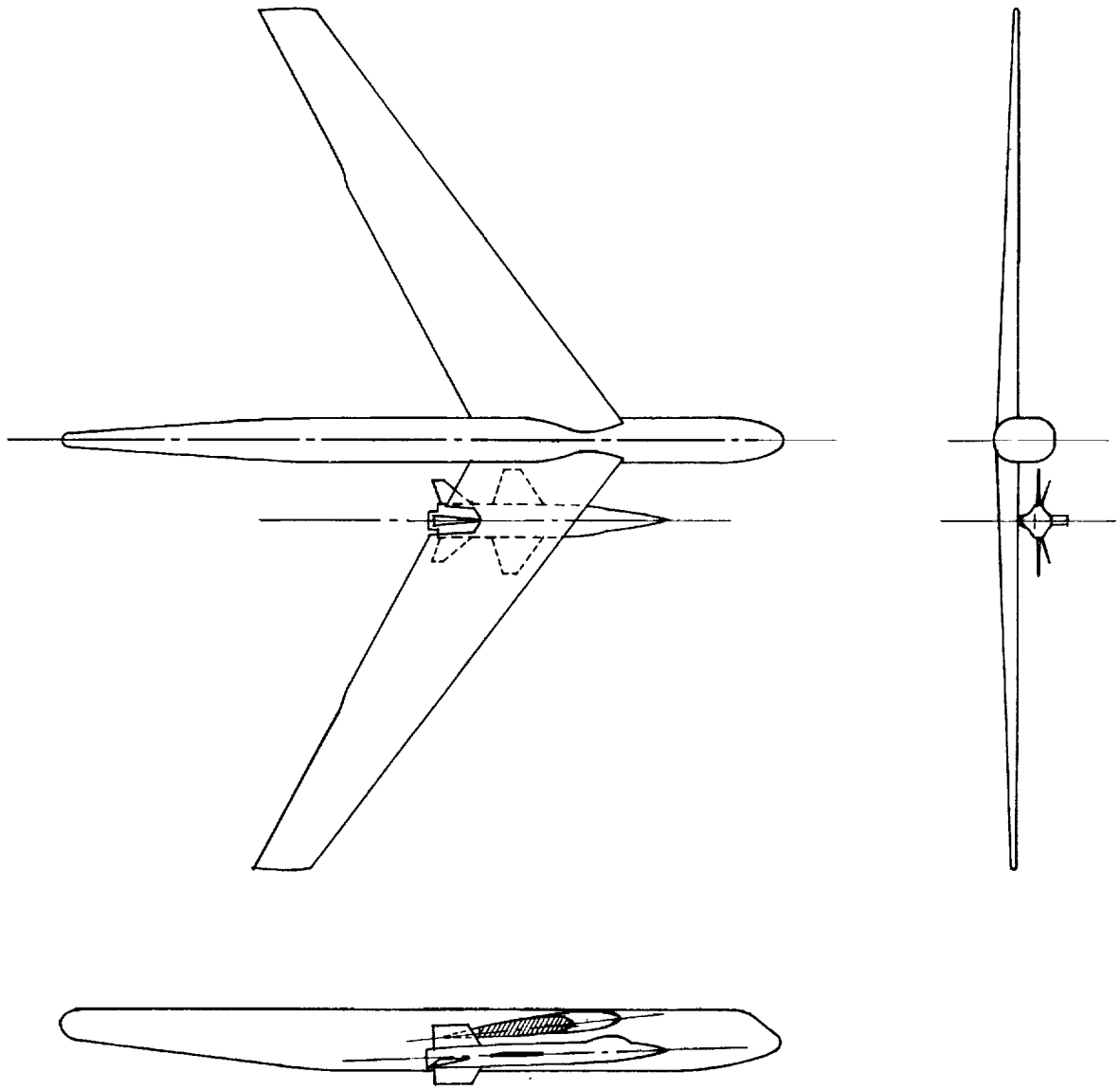

Figure 1.- Relative position of the 0.049-scale models of the B-52 and X-15 airplanes. The connecting pylon is not shown.

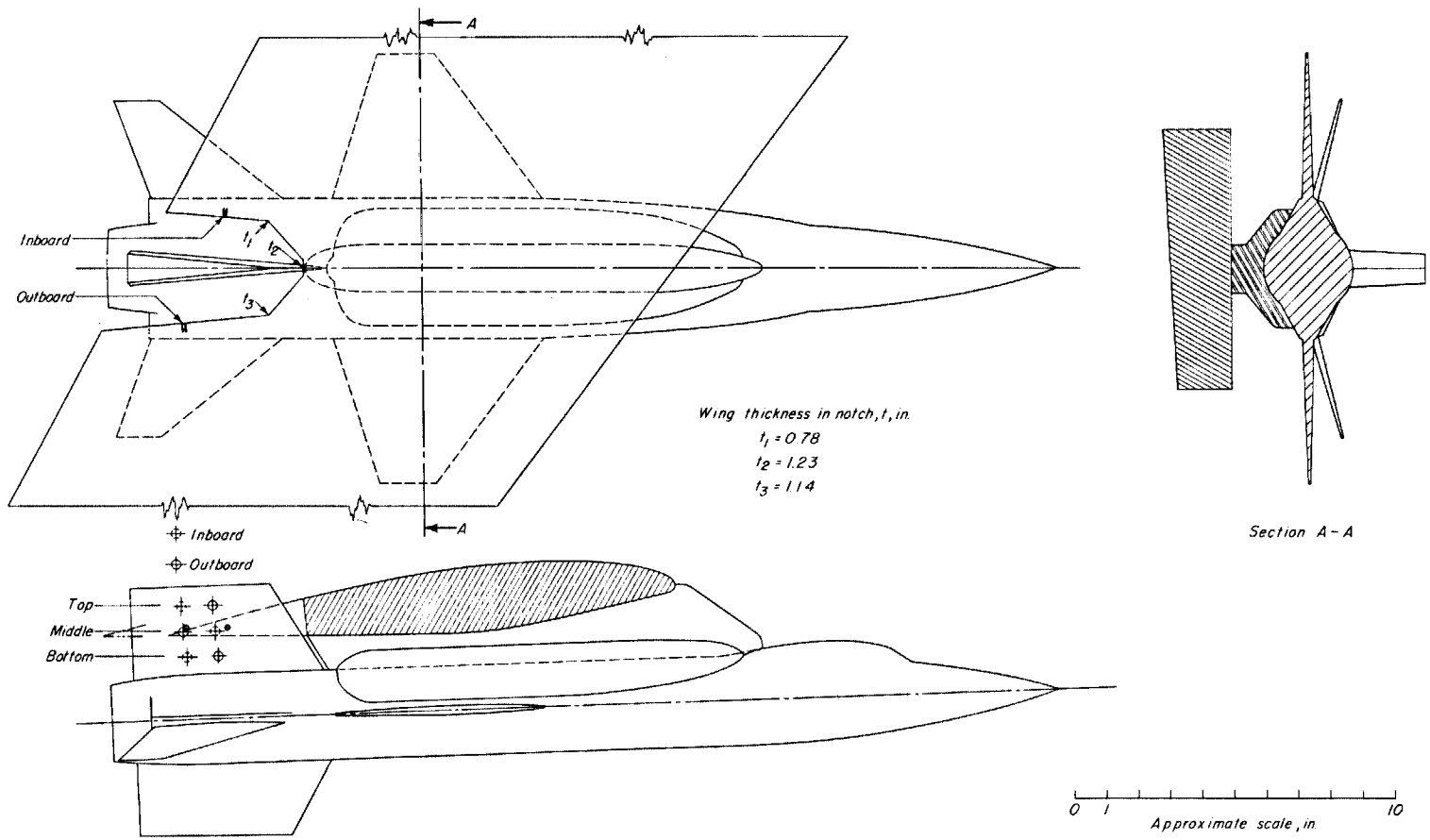


Figure 2.- Relative location of B-52 wing, pylon, X-15, and pressure transducers.

L-2028

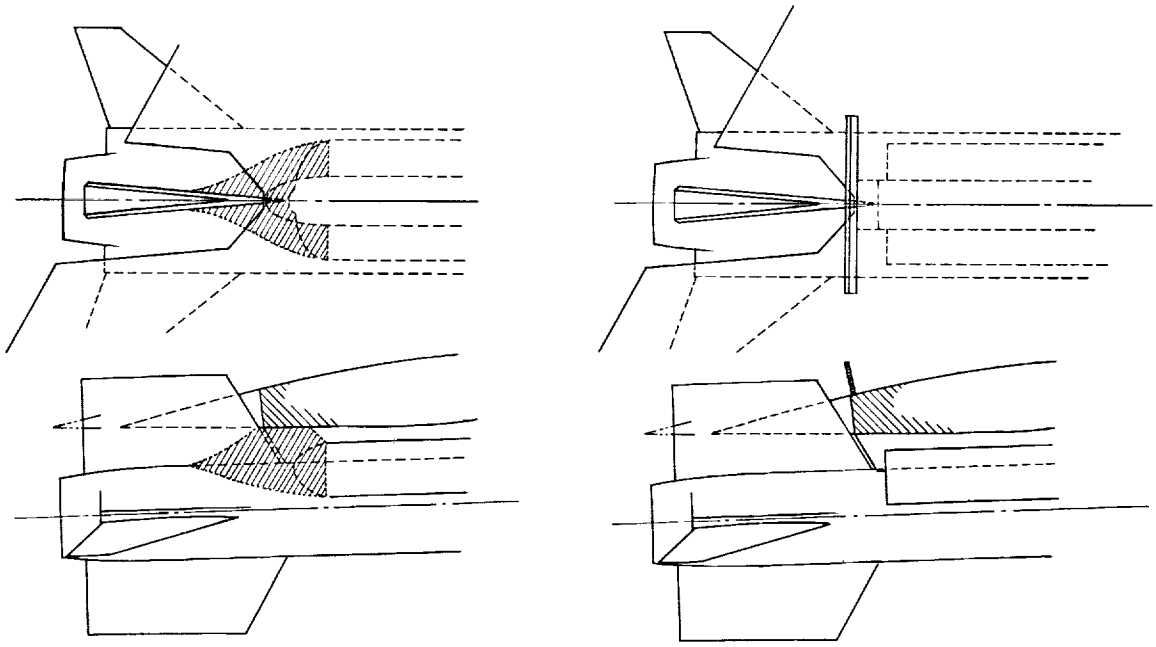

*Faired pylon*

*Configuration A, square-ended pylon.*
*Configuration B, A + upper - surface spoiler.*

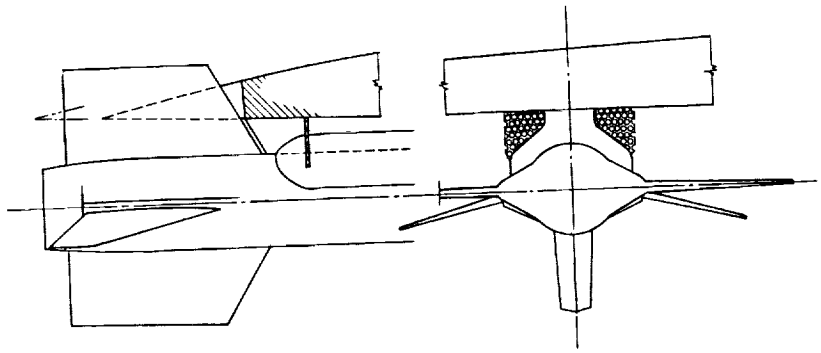

*Configuration C, perforated pylon spoiler*

Figure 3.- Model modifications.

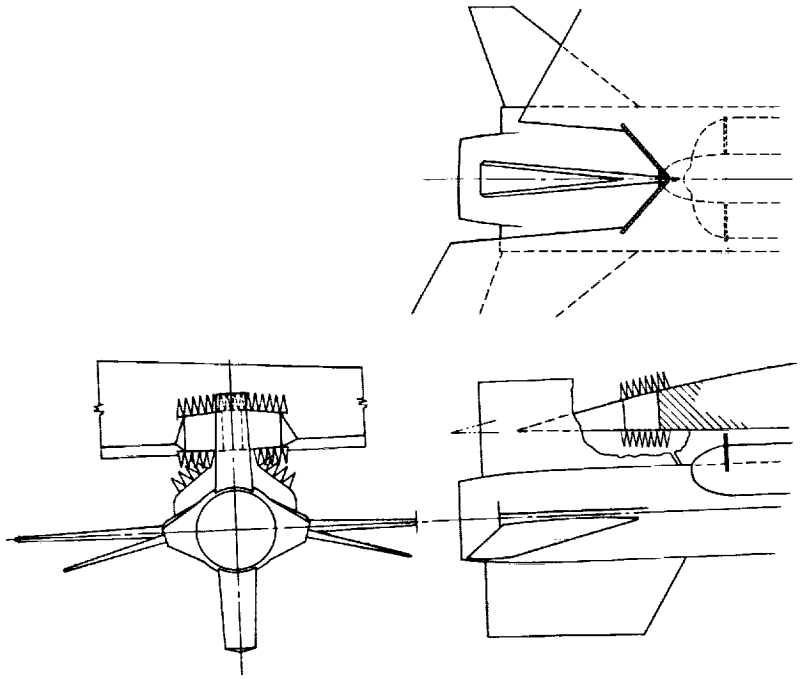

*Configuration D, serrated spoilers.*

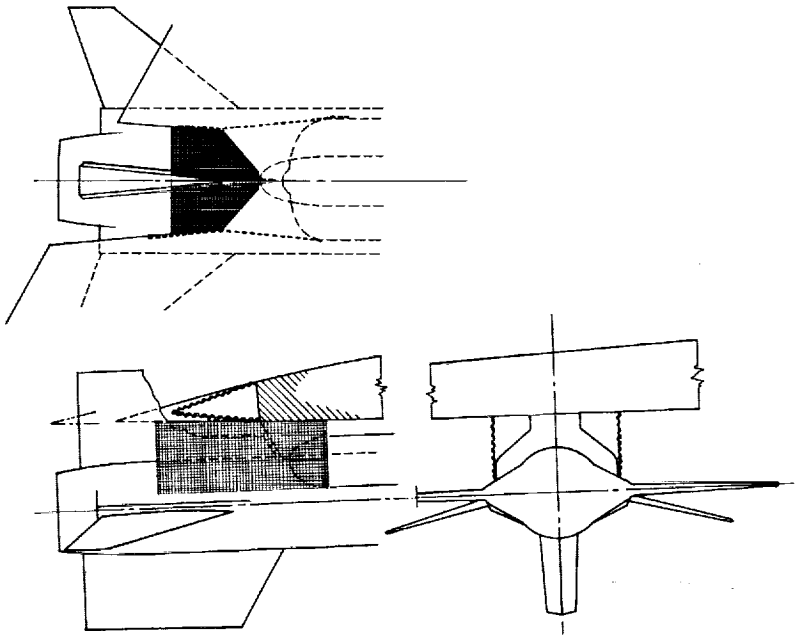

*Configuration E, screen wire wedge and side walls.*

Figure 3.- Concluded.

L-2028

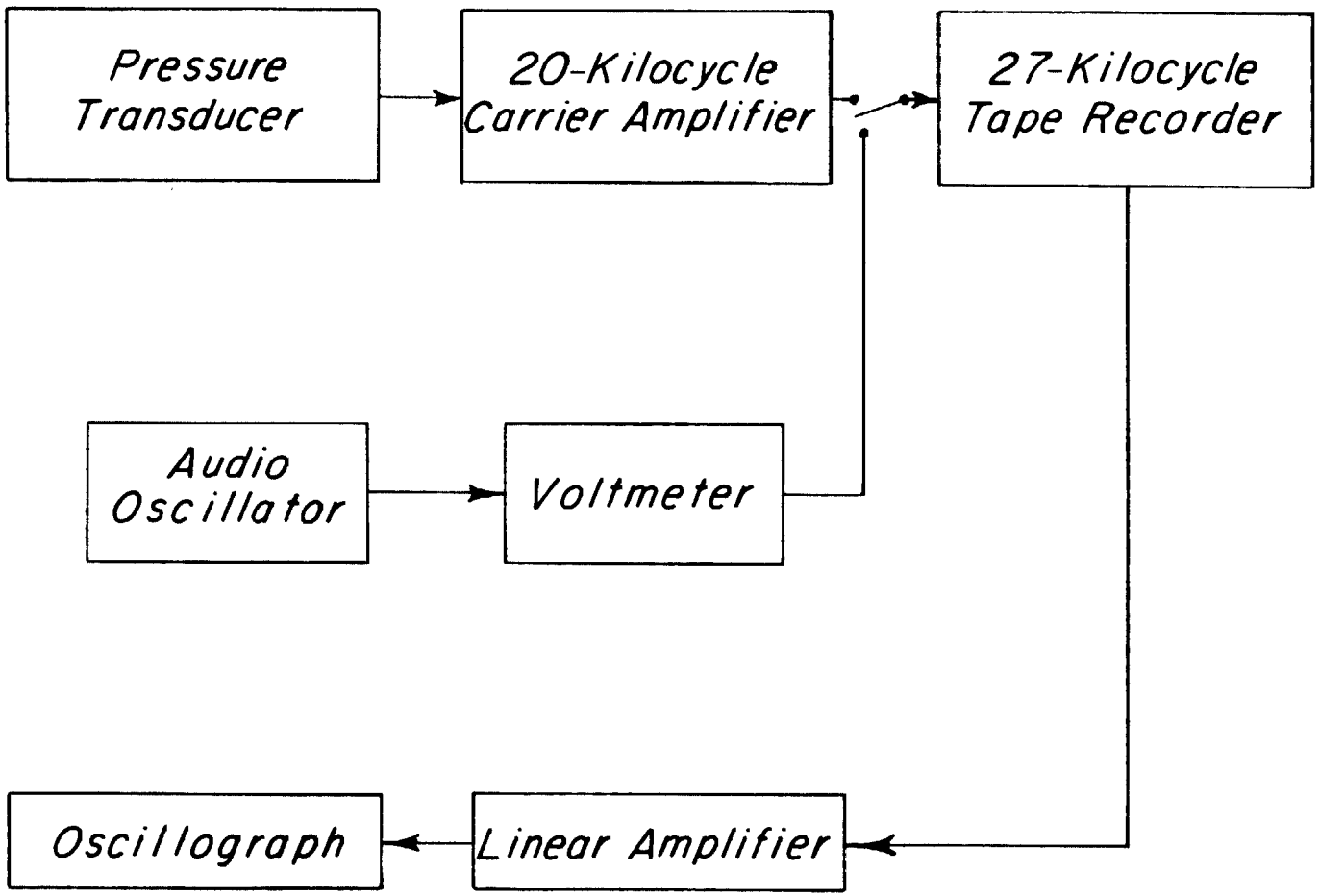


Figure 4.- Schematic diagram of instrumentation.

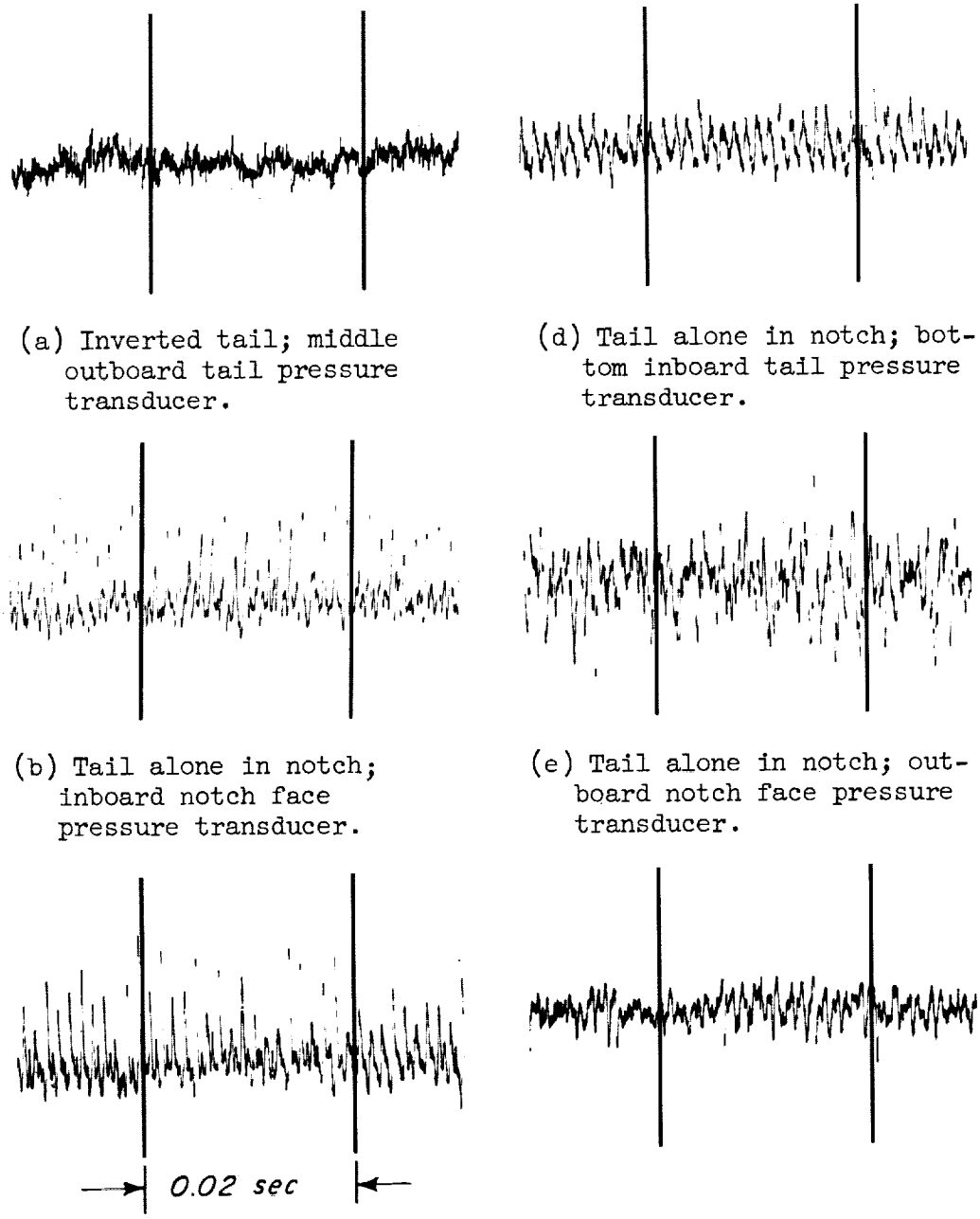


(a) Inverted tail; middle outboard tail pressure transducer.

(b) Tail alone in notch; inboard notch face pressure transducer.

(c) Tail alone in notch; middle inboard tail pressure transducer.

(d) Tail alone in notch; bottom inboard tail pressure transducer.

(e) Tail alone in notch; outboard notch face pressure transducer.

(f) Tail alone in notch; top outboard tail pressure transducer.

Figure 5.- Time-history records of fluctuating pressures on X-15 upper vertical tail and faces of B-52 wing notch for various model modifications.

L-2028

L-2028

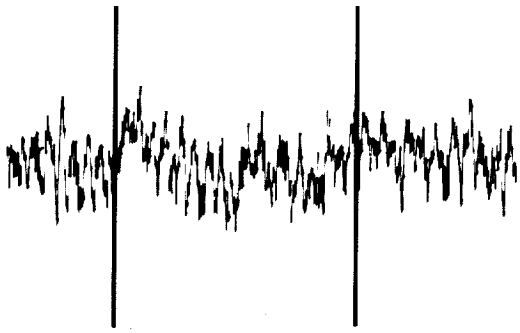

(g) Tail alone in notch; bottom outboard tail pressure transducer.

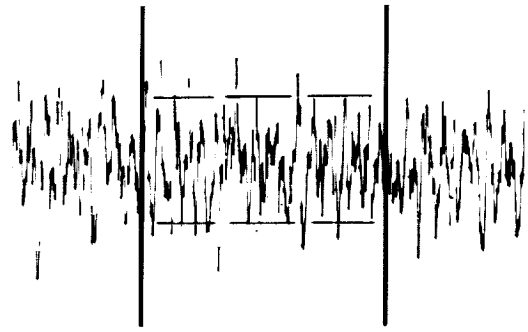

(j) Original configuration; outboard notch face pressure transducer.

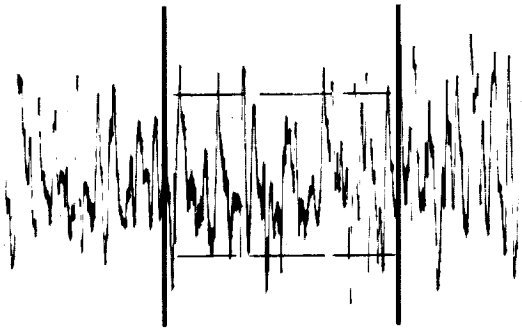

(h) Original configuration; inboard notch face pressure transducer.

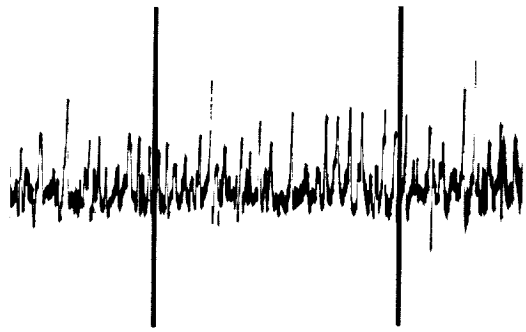

(k) Original configuration; top outboard tail pressure transducer.

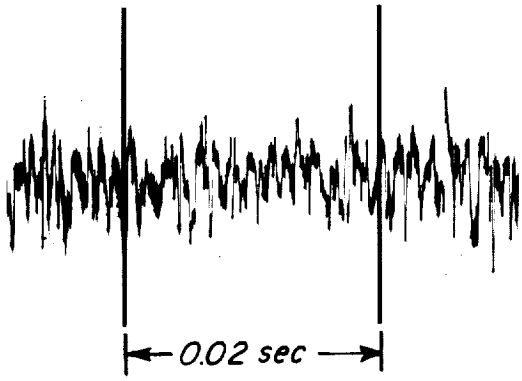


(i) Original configuration; bottom inboard tail pressure transducer.

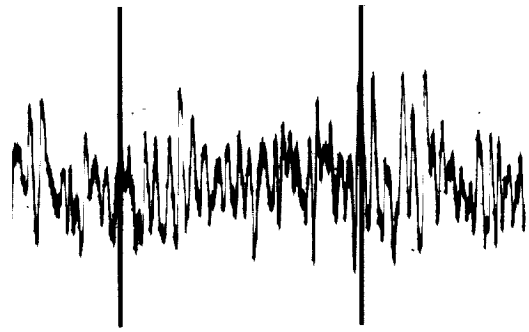

(l) Original configuration with faired pylon; top outboard tail pressure transducer.

Figure 5.- Concluded.

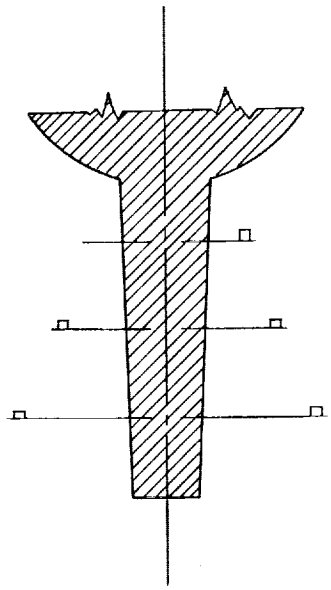

(a) Inverted tail; notch covered.

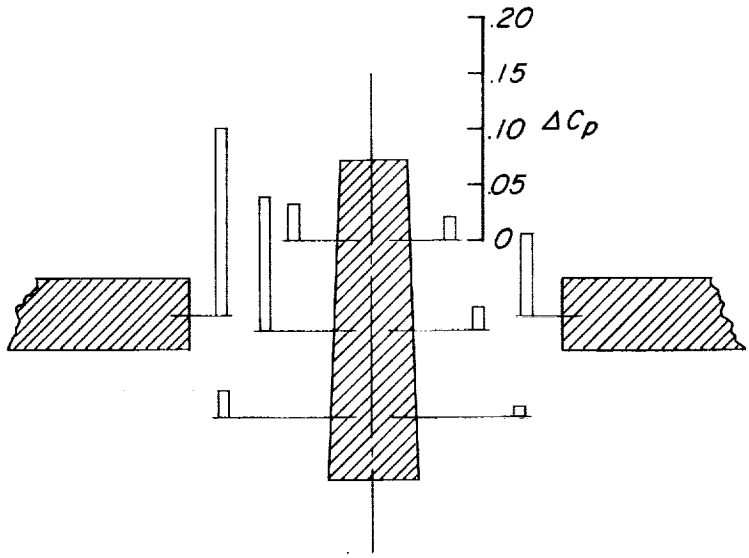


(b) Tail alone in notch.

Figure 6.- Fluctuating pressure coefficients for X-15 upper vertical tail and notch faces of B-52 wing for the original configuration and various modifications shown in relative position as viewed from the rear (outboard to the right).

L-2028

L-2028

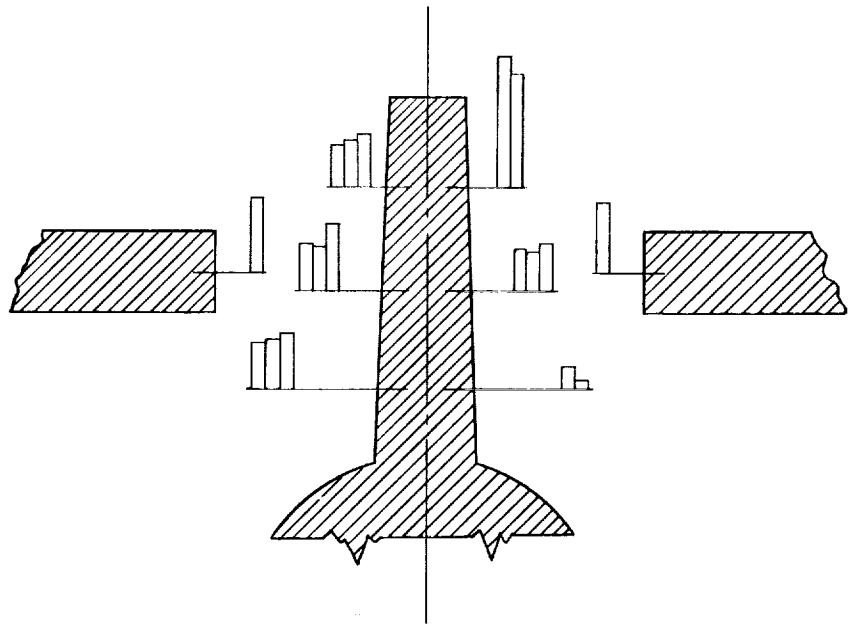

(c) Original configuration.

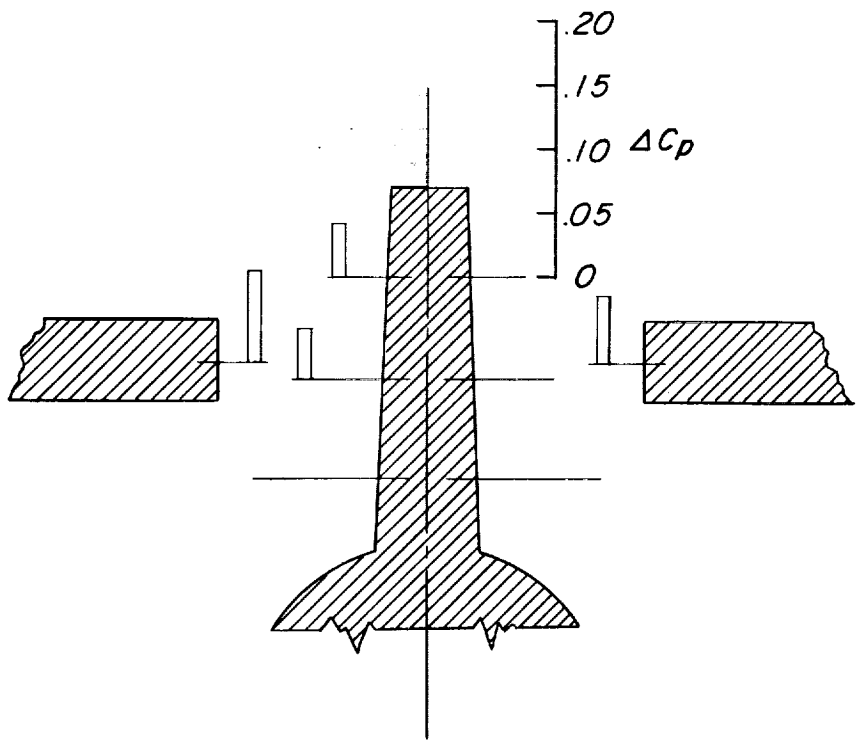


(d) Original configuration; q = 50 lb/sq ft.

Figure 6.- Continued.

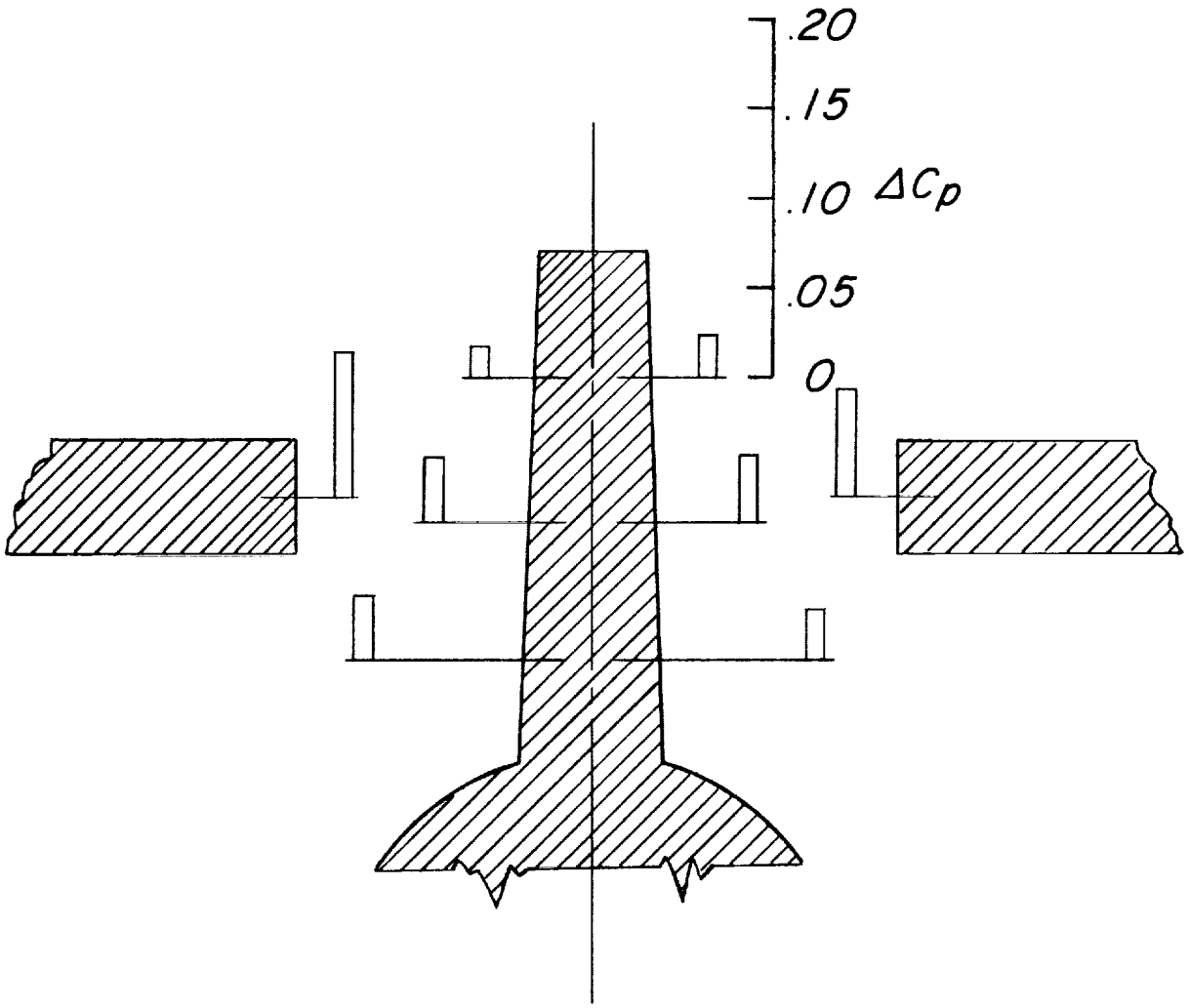


(e) Original configuration with faired pylon.

Figure 6.- Continued.

L-2020

L-2028

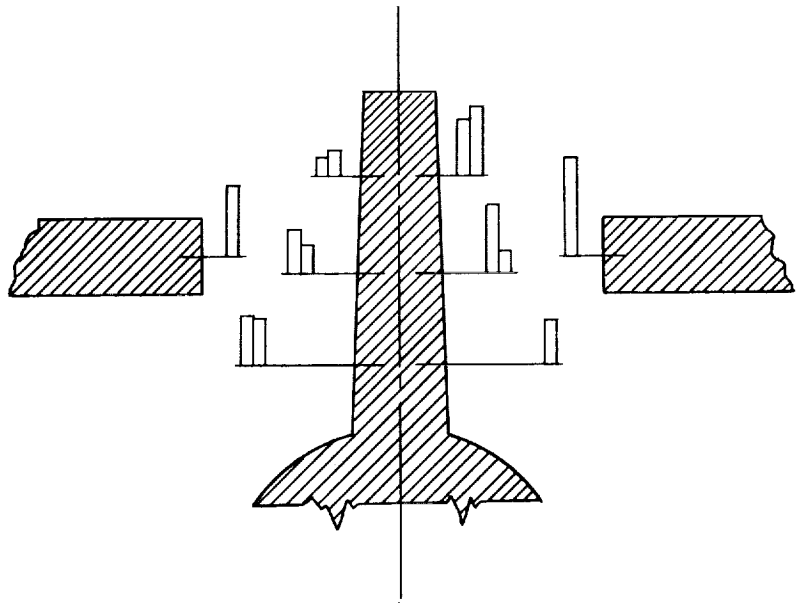

(f) Original configuration with top cover.

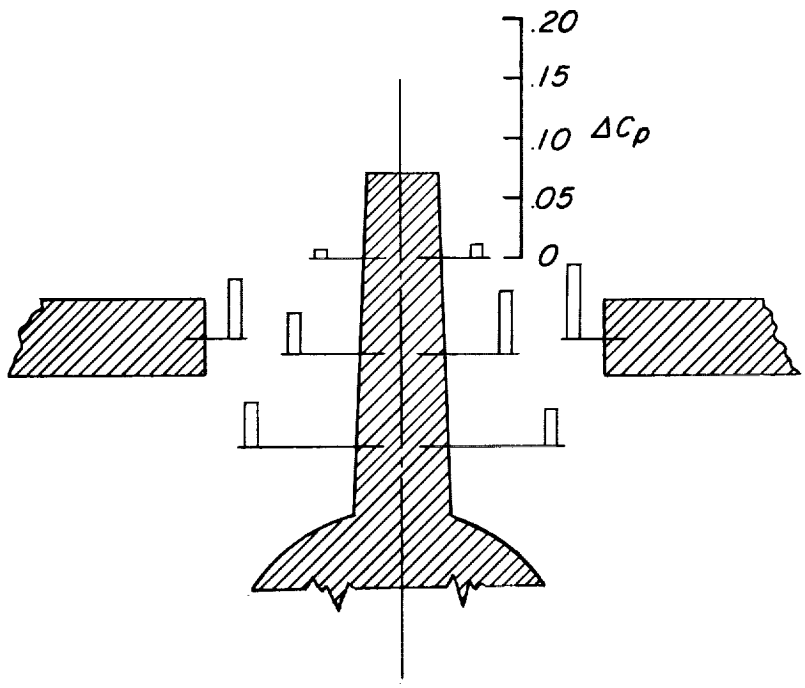


(g) Original configuration with top cover and faired pylon.

Figure 6.- Continued.

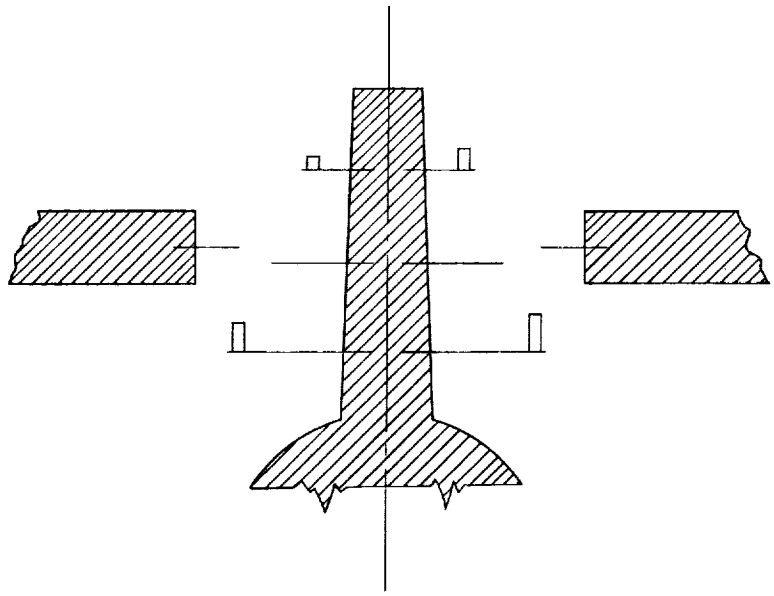

(h) Original configuration with top and bottom cover.

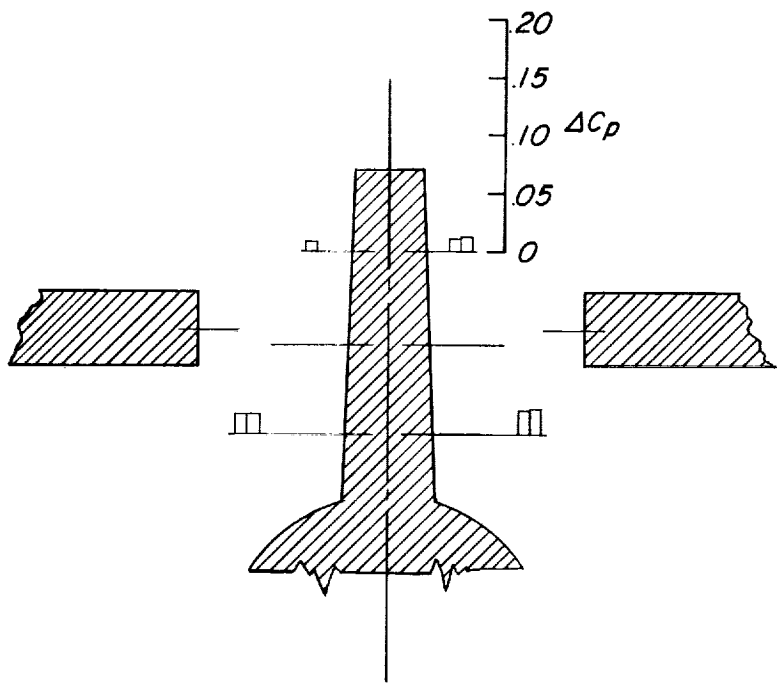


(i) Original configuration with top and bottom cover and faired pylon.

Figure 6.- Concluded.

L-2028

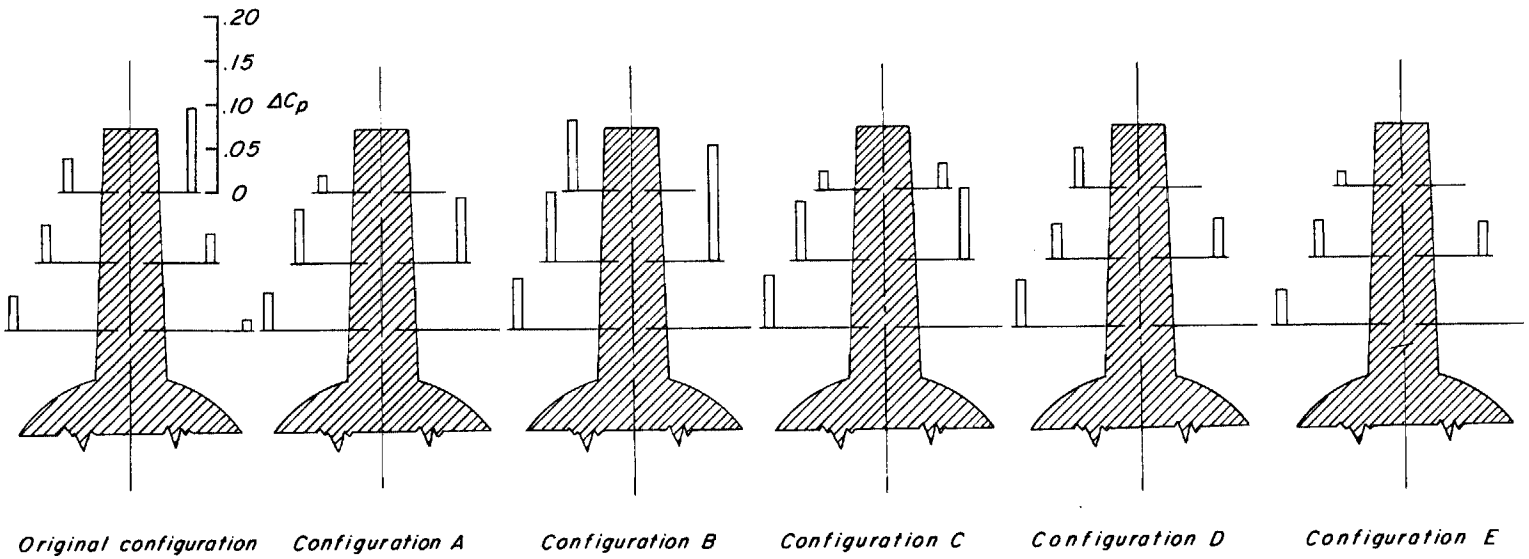


Figure 7.- Comparison of the fluctuating pressure coefficients for the X-15 upper vertical tail, original configuration, with those for configurations A, B, C, D, and E shown in relative position as viewed from the rear (outboard to the right).

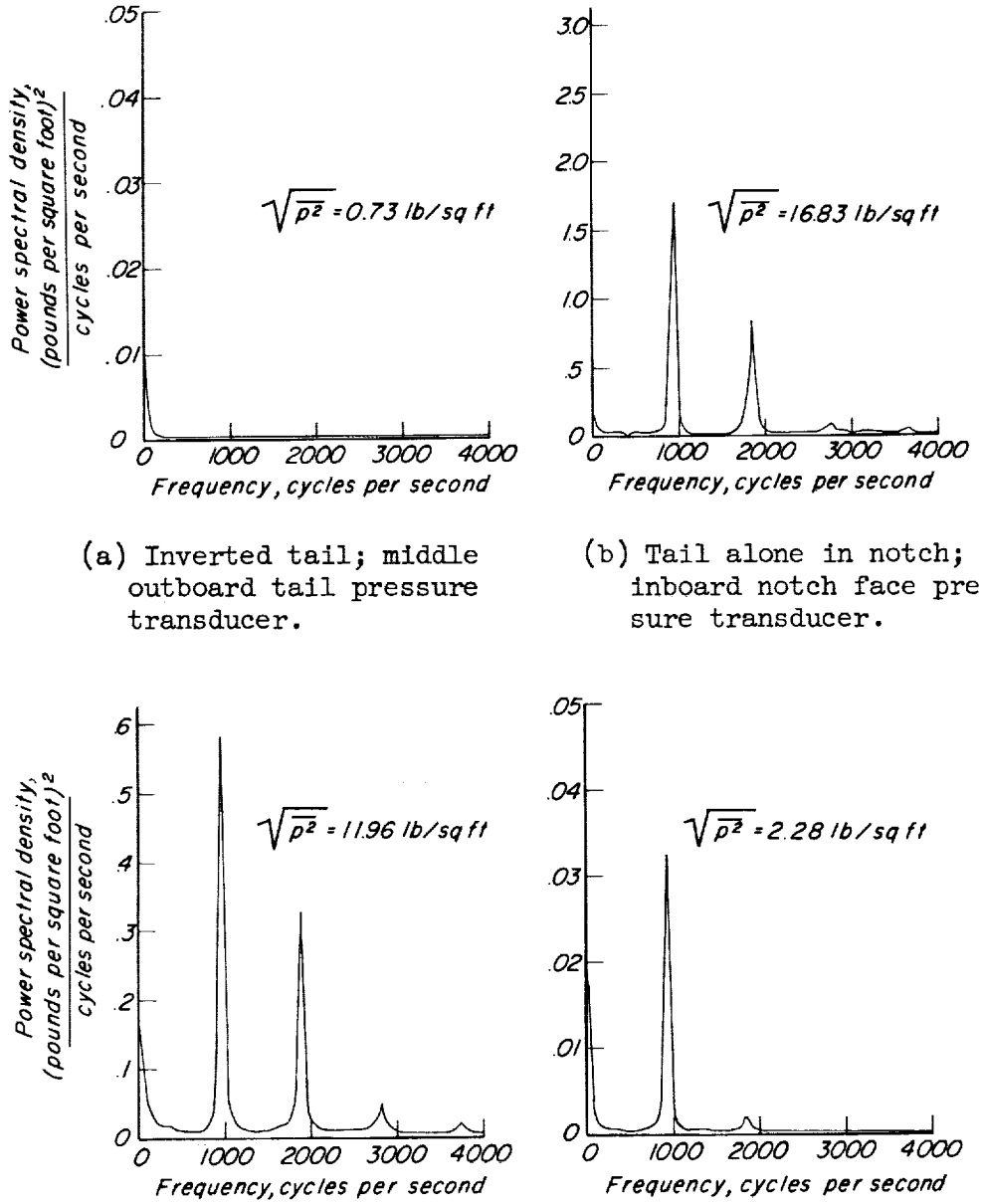


(a) Inverted tail; middle outboard tail pressure transducer.

(b) Tail alone in notch; inboard notch face pressure transducer.

(c) Tail alone in notch; middle inboard tail pressure transducer.

(d) Tail alone in notch; bottom inboard tail pressure transducer.

Figure 8.- Power spectral densities of fluctuating pressures on X-15 upper vertical tail and faces of B-52 wing notch for various model modifications.

L-2028

L-2028

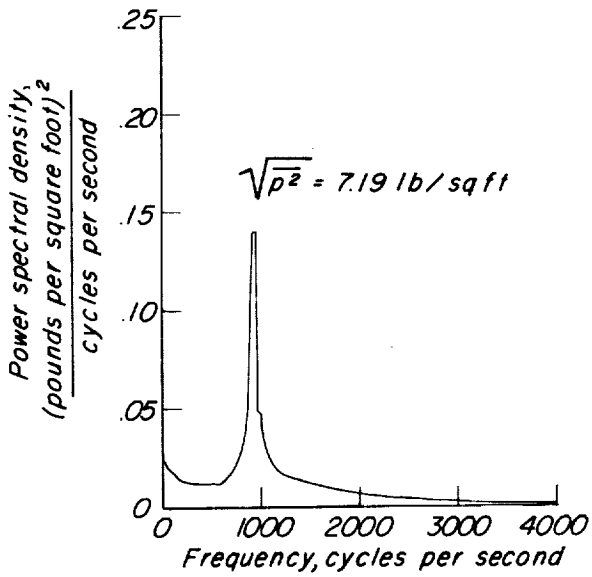


(e) Tail alone in notch; outboard notch face pressure transducer.

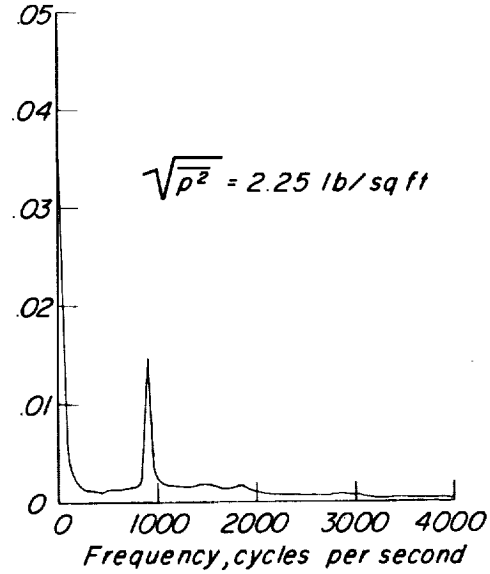


(f) Tail alone in notch; top outboard tail pressure transducer.

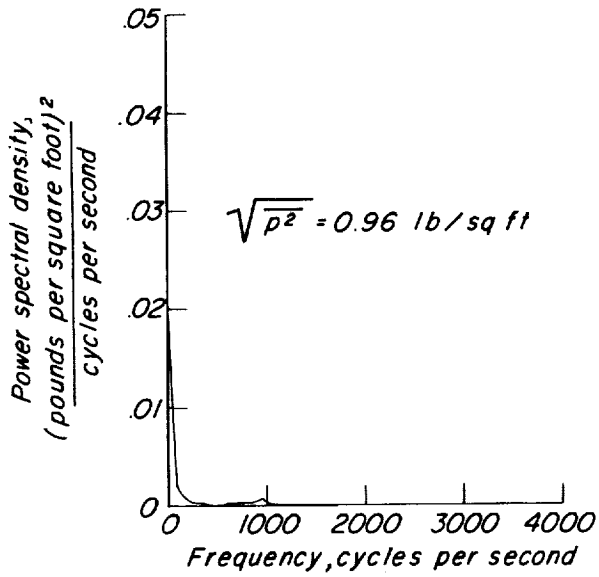


(g) Tail alone in notch; bottom outboard tail pressure transducer.

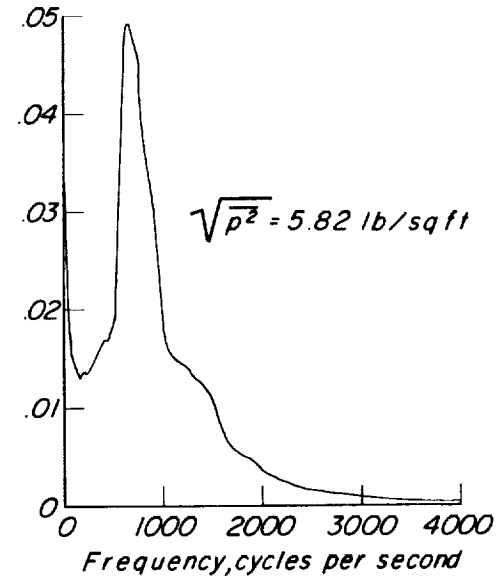


(h) Original configuration; inboard notch face pressure transducer.

Figure 8.- Continued.

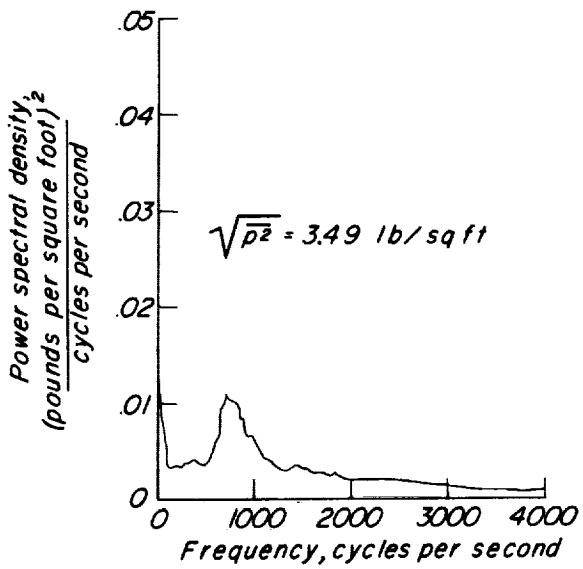


(i) Original configuration; bottom inboard tail pressure transducer.

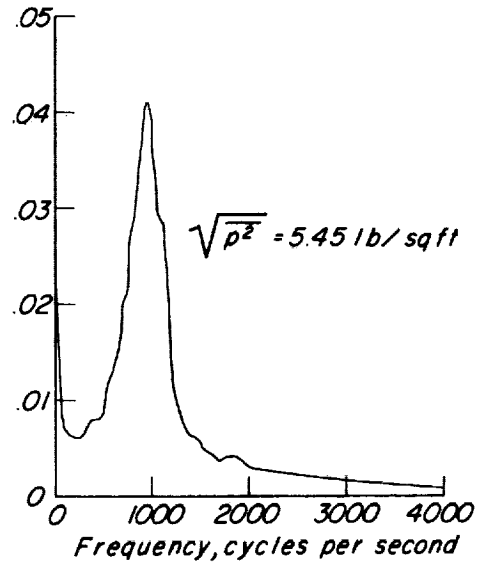


(j) Original configuration; outboard notch face pressure transducer.

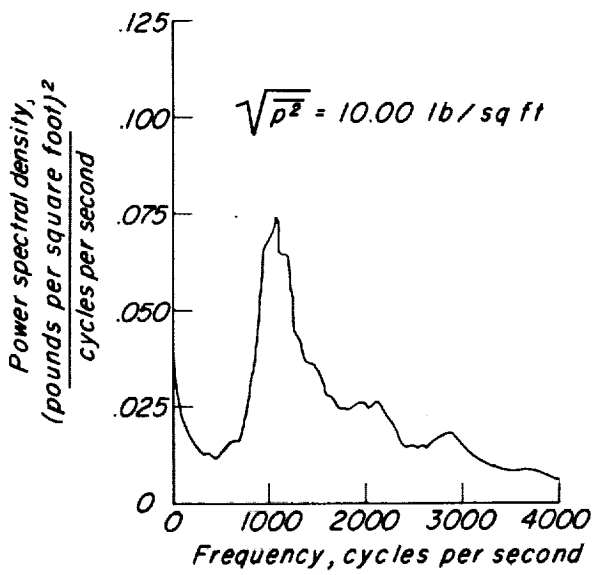


(k) Original configuration; top outboard tail pressure transducer.

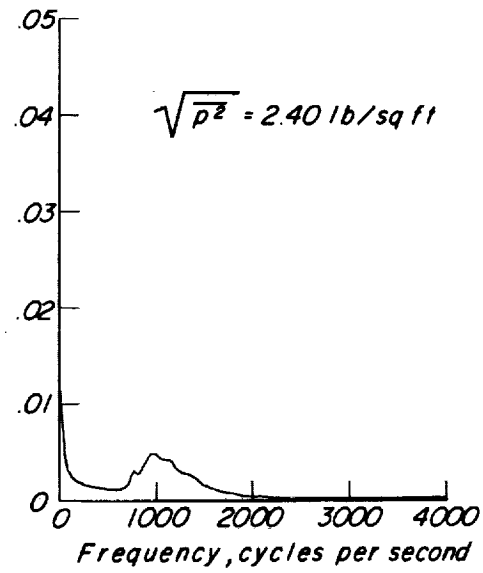


(l) Original configuration with faired pylon; top outboard tail pressure transducer.

Figure 8.- Continued.

L-2028

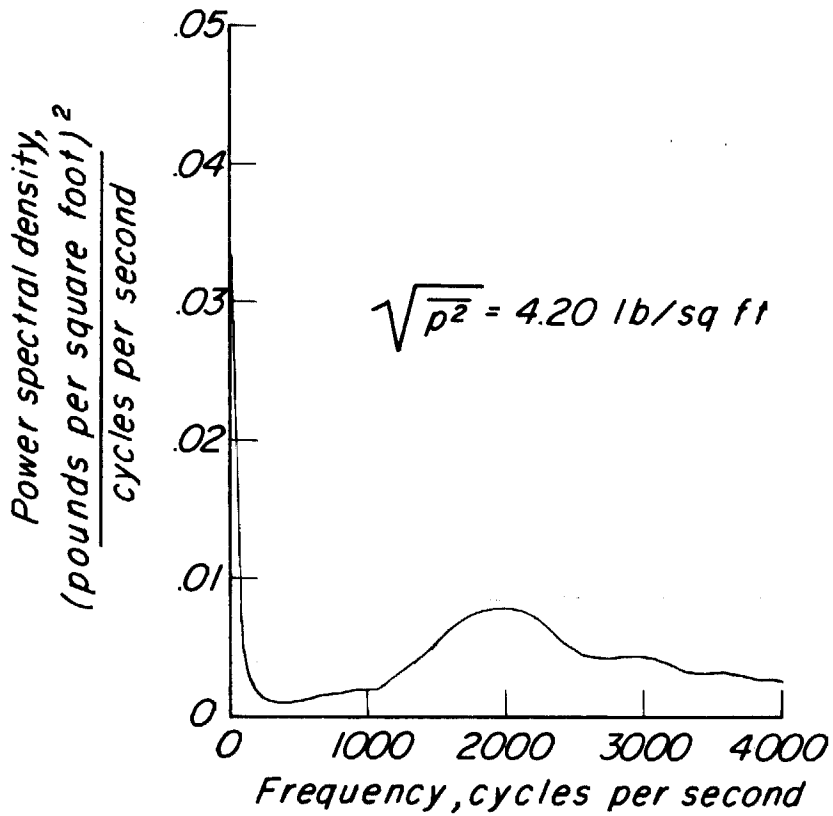


(m) Original configuration with top cover; top outboard tail pressure transducer.

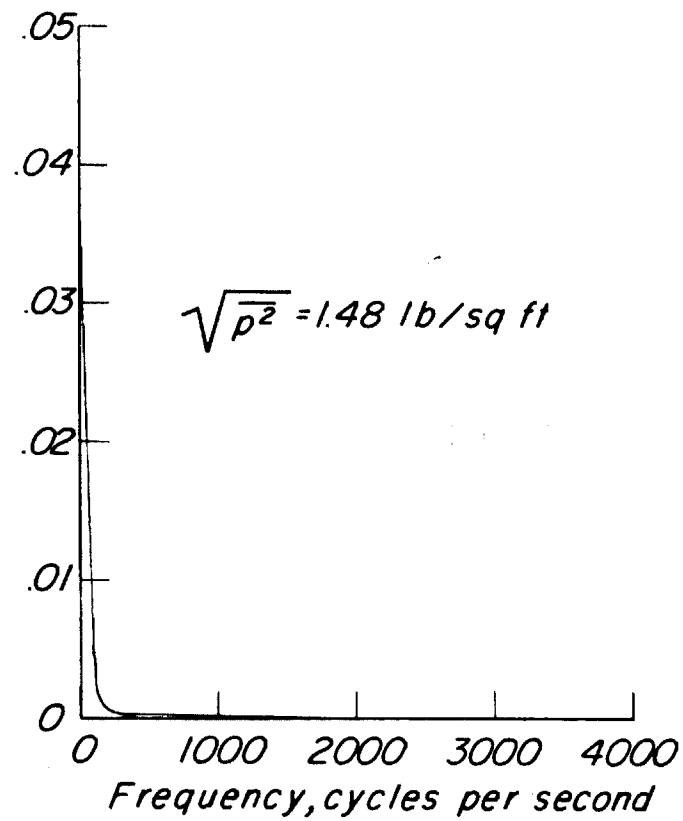


(n) Original configuration with top cover and faired pylon; top outboard tail pressure transducer.

Figure 8.- Concluded.

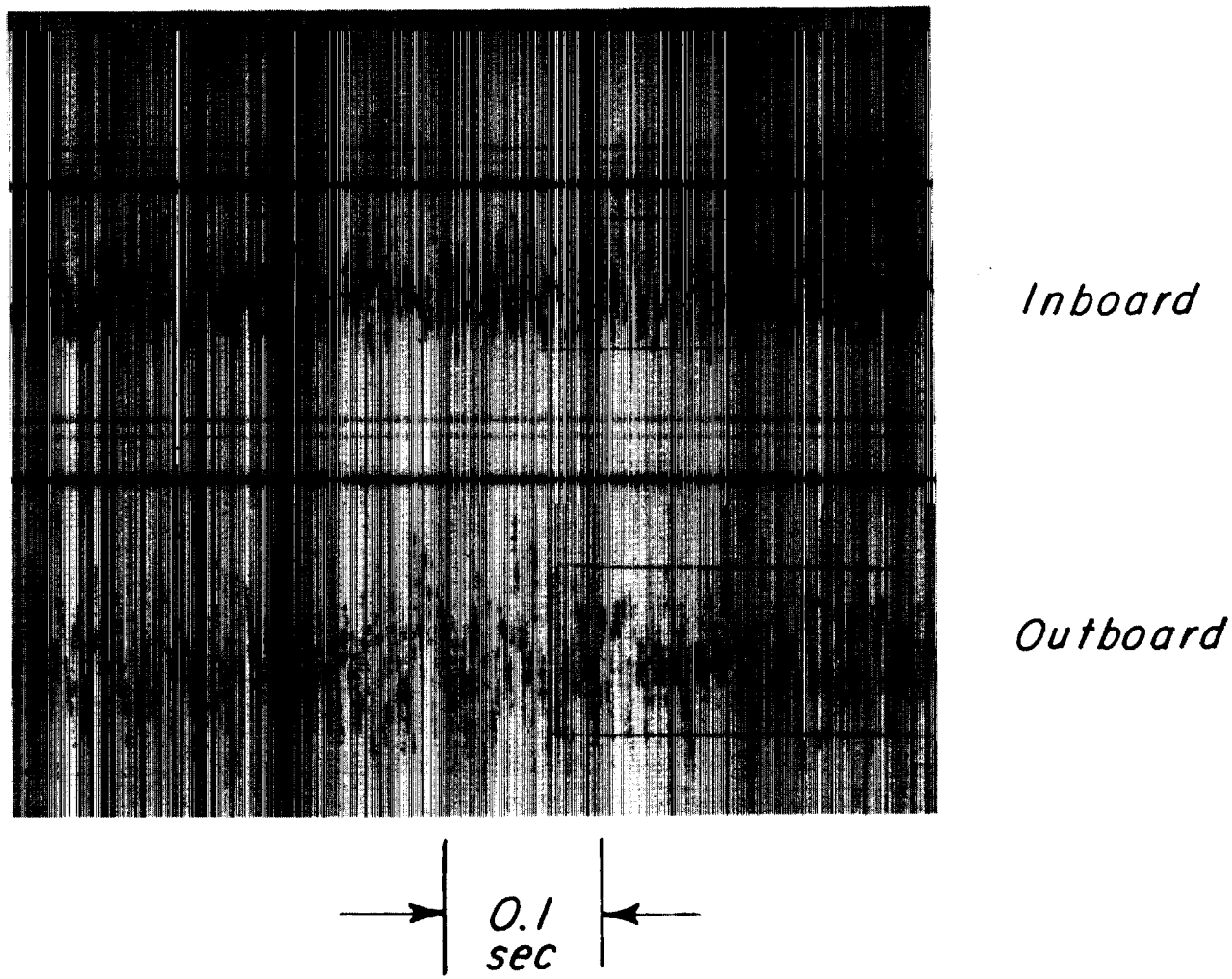


Figure 9.- Film record of fluctuating pressures on faces of B-52 wing notch obtained from flight test, X-15 not being carried.

L-2028

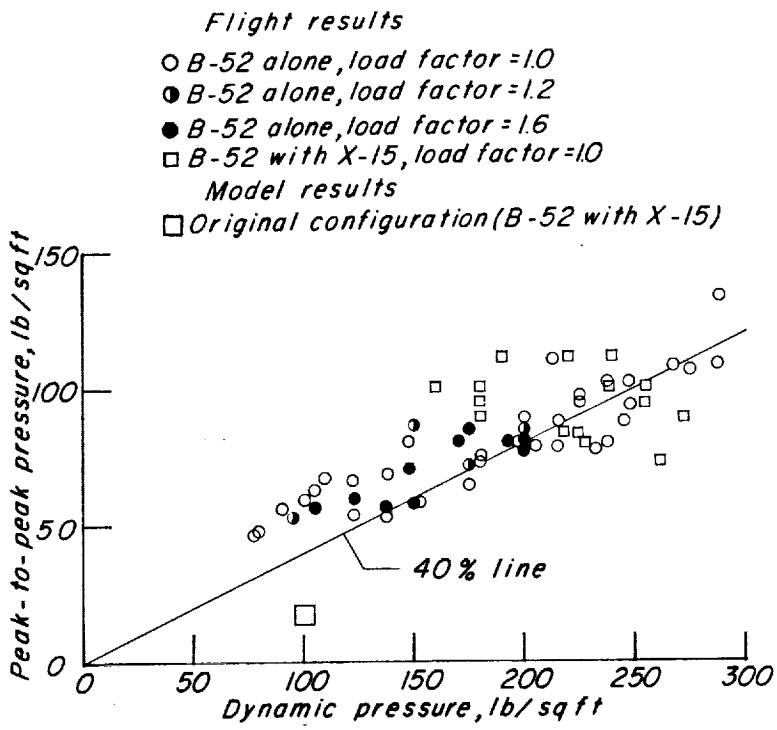


(a) Inboard orifice.

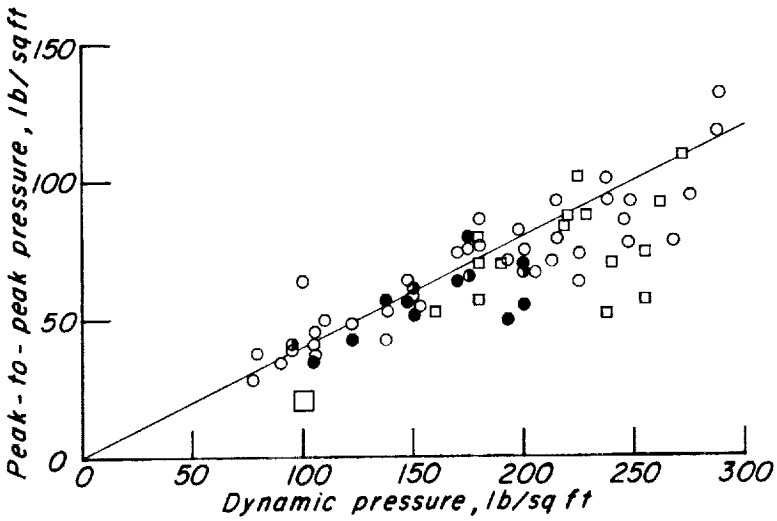


(b) Outboard orifice.

Figure 10.- Variation with dynamic pressure of peak-to-peak pressure fluctuations on faces of B-52 wing notch.

NASA TN D-1359
National Aeronautics and Space Administration.
A WIND-TUNNEL INVESTIGATION OF PRESSURE FLUCTUATIONS ON THE UPPER VERTICAL TAIL OF THE X-15 WHEN MATED TO THE B-52 CARRIER AIRPLANE. John W. McKee and Thomas A. Byrdsong. June 1962. 29p. OTS price, $0.75. (NASA TECHNICAL NOTE D-1359)

A wind-tunnel investigation has been made to obtain the characteristics of the fluctuating pressures acting on the upper vertical tail of the X-15 airplane when carried by the B-52 airplane, the tail passing through a large notch in the trailing edge of the B-52 wing. The effects of various modifications in the vicinity of the notch that were made in an effort to lower the magnitude of the pressure fluctuations are presented.

I. McKee, John W.
II. Byrdsong, Thomas A.
III. NASA TN D-1359

(Initial NASA distribution:
1, Aerodynamics, aircraft;
3, Aircraft;
51, Stresses and loads.)

NASA

NASA TN D-1359
National Aeronautics and Space Administration.
A WIND-TUNNEL INVESTIGATION OF PRESSURE FLUCTUATIONS ON THE UPPER VERTICAL TAIL OF THE X-15 WHEN MATED TO THE B-52 CARRIER AIRPLANE. John W. McKee and Thomas A. Byrdsong. June 1962. 29p. OTS price, $0.75. (NASA TECHNICAL NOTE D-1359)

A wind-tunnel investigation has been made to obtain the characteristics of the fluctuating pressures acting on the upper vertical tail of the X-15 airplane when carried by the B-52 airplane, the tail passing through a large notch in the trailing edge of the B-52 wing. The effects of various modifications in the vicinity of the notch that were made in an effort to lower the magnitude of the pressure fluctuations are presented.

I. McKee, John W.
II. Byrdsong, Thomas A.
III. NASA TN D-1359

(Initial NASA distribution:
1, Aerodynamics, aircraft;
3, Aircraft;
51, Stresses and loads.)

NASA

NASA TN D-1359
National Aeronautics and Space Administration.
A WIND-TUNNEL INVESTIGATION OF PRESSURE FLUCTUATIONS ON THE UPPER VERTICAL TAIL OF THE X-15 WHEN MATED TO THE B-52 CARRIER AIRPLANE. John W. McKee and Thomas A. Byrdsong. June 1962. 29p. OTS price, $0.75. (NASA TECHNICAL NOTE D-1359)

A wind-tunnel investigation has been made to obtain the characteristics of the fluctuating pressures acting on the upper vertical tail of the X-15 airplane when carried by the B-52 airplane, the tail passing through a large notch in the trailing edge of the B-52 wing. The effects of various modifications in the vicinity of the notch that were made in an effort to lower the magnitude of the pressure fluctuations are presented.

I. McKee, John W.
II. Byrdsong, Thomas A.
III. NASA TN D-1359

(Initial NASA distribution:
1, Aerodynamics, aircraft;
3, Aircraft;
51, Stresses and loads.)

NASA

NASA TN D-1359
National Aeronautics and Space Administration.
A WIND-TUNNEL INVESTIGATION OF PRESSURE FLUCTUATIONS ON THE UPPER VERTICAL TAIL OF THE X-15 WHEN MATED TO THE B-52 CARRIER AIRPLANE. John W. McKee and Thomas A. Byrdsong. June 1962. 29p. OTS price, $0.75. (NASA TECHNICAL NOTE D-1359)

A wind-tunnel investigation has been made to obtain the characteristics of the fluctuating pressures acting on the upper vertical tail of the X-15 airplane when carried by the B-52 airplane, the tail passing through a large notch in the trailing edge of the B-52 wing. The effects of various modifications in the vicinity of the notch that were made in an effort to lower the magnitude of the pressure fluctuations are presented.

I. McKee, John W.
II. Byrdsong, Thomas A.
III. NASA TN D-1359

(Initial NASA distribution:
1, Aerodynamics, aircraft;
3, Aircraft;
51, Stresses and loads.)

NASA