N62 13230

NASA TN D-1292

NASA TN D-1292

TECHNICAL NOTE

D-1292

A PULSED FREQUENCY MODULATION DECOMMUTATOR

H. H. Levy,
A. M. Demmerle, and J. L. Tinsley

Goddard Space Flight Center

NATIONAL AERONAUTICS AND SPACE ADMINISTRATION
WASHINGTON June 1962

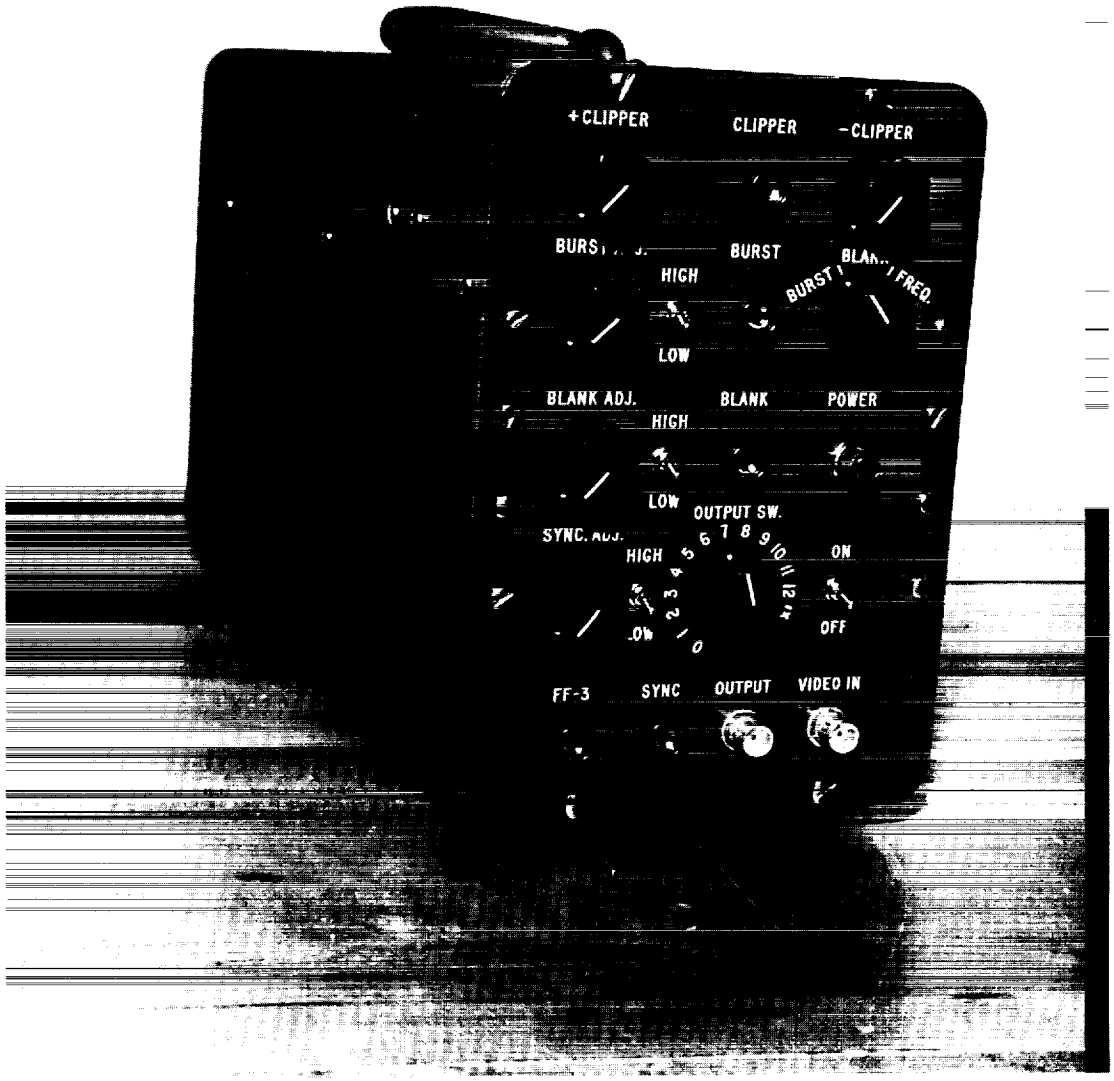

The PFM Decommutator

G-199

CONTENTS

Summary i

Frontispiece iv

INTRODUCTION 1

FRONT END 3

DECOMMUTATOR PROPER 6

OPERATING PROCEDURE FOR THE DECOMMUTATOR. . 11

Step 1—Set the Clippers. 11

Step 2—Set the Burst Adjust, Blank Adjust, and Sync Adjust Controls. 12

UTILIZING THE OUTPUTS 14

1X

G-199

A PULSED FREQUENCY MODULATION DECOMMUTATOR

by
H. H. Levy,
A. M. Demmerle, and J. L. Tinsley
Goddard Space Flight Center

SUMMARY

The Pulsed Frequency Modulation (PFM) type of telemetry is briefly described, and the function of a decommutator for this type of telemetry is explained. Circuit details, the logic description, and complete operating procedures for the decommutator are included. All the inputs and outputs are described.

G-199

A PULSED FREQUENCY MODULATION DECOMMUTATOR

by
H. H. Levy,
A. M. Demmerle, and J. L. Tinsley
Goddard Space Flight Center

INTRODUCTION

A telemetry system originally designed for the Vanguard satellite program (References 1, 2, 3) has been used in many later satellites. It is a combined pulse-width modulation and frequency modulation system comprised of a series of burst-blank combinations, in which the frequency of the burst, the width of the burst, and the width of the blank are each used as an information channel (Figure 1).

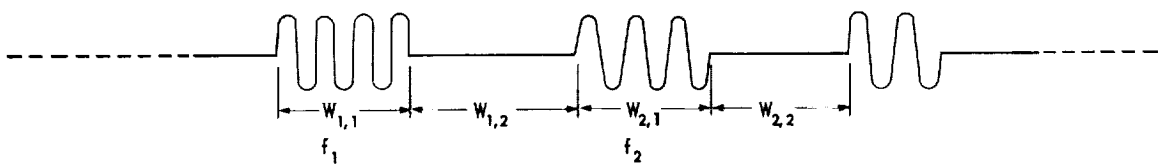

Figure 1 — A pulsed frequency telemeter format

Identification of the individual channels is accomplished by use of a "sync" (synchronous) burst, identifiable by the fact that it is wider than any of the other bursts. The total number of bursts in any one frame, (before $W_{1,1}$ is repeated) depends primarily on the number of information channels needed. This signal is used to modulate an RF carrier. In this report the first subscript number after a "W" indicates the channel (the number in the series of burst-blank combinations) and the second number, when it appears, indicates whether a burst or blank is being discussed.

The principles discussed throughout this paper hold true for any values of W and f and any number of burst-blank pairs before the frame repeats itself. The particular cases dealt with involve values of W in the range of from 0.2 to 25 milliseconds, values of f in the range from 4 to 40 kc, and a total of 16 burst-blank pairs. Therefore, when

numerical values are mentioned they are in connection with the situations involving these limits on W and f and a 16 burst frame.

A decommutator is a device which will process the signal, after it has been demodulated from the RF carrier, and separate the various channels of information, i.e., $W_{1,1}$ $W_{1,2}$, f_1, $W_{2,1}$, $W_{2,2}$, f_2, etc. By the time this signal reaches the decommutator it has suffered several types of degeneration, all of which create problems for the decommutator in regard to properly interpreting the pulse width W. Thus the decommutator's problem is twofold: first, to recondition the signal and, second, to separate the various channels of information. The examination of tape recordings from several different satellites indicates that the decommutator needs to be capable of signal restoration from several types of signal degeneration and combinations of those types:

1. It must be capable of picking the bursts from a noisy background. This noise is the product of both atmospheric and receiver noise, the power spectra of which include the expected frequencies f_1, f_2, etc.

2. It must be capable of restoring the amplitude of the bursts from the effect of a low frequency sinusoidal amplitude modulation, caused by the nulls in the satellite's transmitting antenna pattern as the satellite spins or tumbles. This modulation can cause the amplitude of the bursts to vary by a factor of 10.

3. It must be capable of maintaining the amplitude of the bursts at some fixed value regardless of the strength of the input signal to the decommutator. The signal out of the receiver can become excessively small when the line of sight to the satellite is at variance to the main lobe of the receiving antenna to the degree that the AGC action of the receiver is inadequate.

4. It must be capable of maintaining a constant signal level for adjacent bursts. It seems that the modulators in some of the satellites prefer some bursts to others. This could be due to a frequency sensitivity of the modulators.

Note that items 2, 3, and 4 have one thing in common: the need for automatic gain control (AGC). Differences lie primarily in the time constants involved. In case 2 AGC needs to accommodate signal strength changes at the spin or tumble rate of the satellite, i.e., in the order of hundreds of milliseconds. In case 3 AGC needs to accommodate signal strength changes at a much slower rate, in the order of seconds or tens of seconds. In case 4 AGC needs to accommodate signal strength changes from burst to burst, or at a rate in the order of tens of milliseconds. The last requirement is the most stringent one. Here the gain may be required to change from one burst to the next, the burst with

the smaller signal requiring the larger circuit gain; and yet the gain must be minimized during the blank period to maintain requirement 1, signal detectability in spite of noise. Noise can only add to signal strength in the blank period, whereas it can either add to or subtract from signal strength during the burst period. The problem is not to restore the signal per se, but to measure the width of the burst-blank envelope, the accuracy with which the envelope can be reconstructed being dependent upon the quality of the signal. This job of restoring the quality of the signal and detecting the envelope is done in the "front end" of the decommutator. The job of separating the various channels is done in the remaining portion, the decommutator proper.

FRONT END

The so-called front end of the decommutator is that portion between the input clippers and amp_5 depicted on the logic block diagram (Figure 2).

The clipper limits the magnitude of the peak signal and thus can be set to eliminate much of the burst-to-burst modulation described in item 4 in the previous section.

The variable attenuator is the key to the AGC (automatic gain control) action of the front end (Reference 4). Its principle of operation is similar to that shown in Figure 3. The output of such a network can be held constant, regardless of the input, merely by changing the ratio $(R + R_1)/R$. The resistance R is varied electronically by means of a forward-biased diode. Figure 4 shows how a diode can be used in this circuit in place of the resistor R.

Figure 5 is a typical curve of a diode characteristic, depicting the voltage across a diode as a function of the current through it. The equivalent ac resistance of the diode is: $R = dV_D/dI_D$. The capacitor C serves to isolate the diode from direct currents originating at the input and output. I_g is a current generator with which the equivalent resistance R of the diode can be controlled. Thus, it is possible to keep the ac output voltage constant, in spite of changes in the input voltage, by varying I_g. I_g corresponds to dc amp_2 in Figure 2.

Two characteristics of the input signal are used to control the output voltage of the variable attenuator, the long-term average of the peak signal voltage and the signal-to-noise ratio. The long-term average of the peak signal voltage is determined by the use of a standard diode detector which has a long time constant. When this detector indicates a large peak signal, it tends to increase the current output of dc amp_2, thus decreasing the diode's equivalent resistance R and in turn tending to decrease the output voltage of the variable attenuator. The effect, then, is that the output of the variable attenuator remains constant in spite of long-term changes in the peak voltage of the input signals. This satisfies requirements 2 and 3 of the previous section.

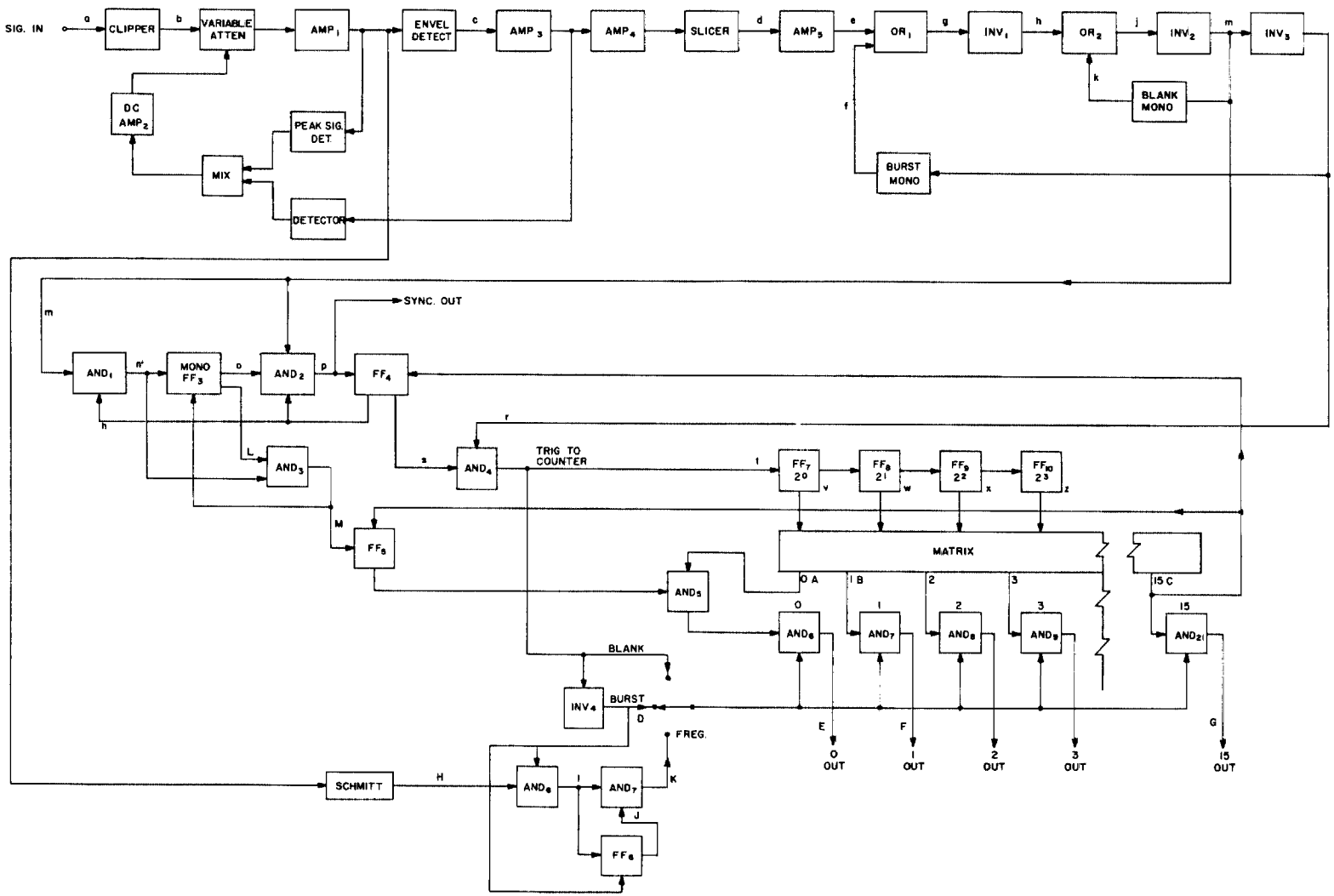

Figure 2 — Decommutator logic block diagram. FF-flip flop.

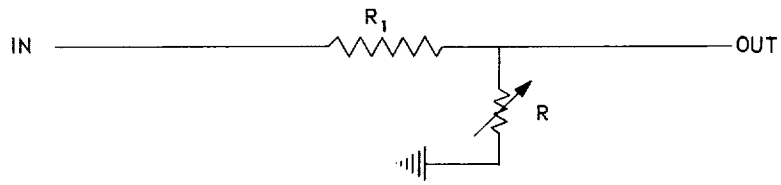

Figure 3 — Principle of the variable attenuator

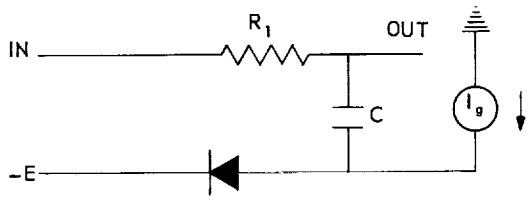

Figure 4 — Variable attenuator with forward biased diode and resistor

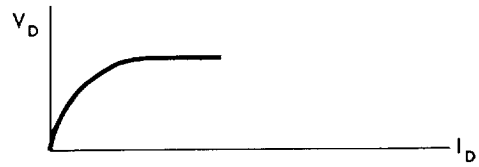

Figure 5 — Diode characteristic

The signal is fed through an envelope detector (Figure 2) whose output voltage is proportional to the ratio of the signal-plus-noise power in the burst to the noise power in the blank. The output of this detector is, then, a voltage which follows the envelope of the input signal, higher during the bursts than during the blanks. The peak value of this envelope, whose nature is that of a deteriorated square wave, is detected and fed back through the mixer so that control is exercised over the variable attenuator. Thus, when the signal-to-noise ratio of the input voltage decreases, the envelope voltage tends to become smaller, causing the equivalent resistance R of the variable attenuator to increase and, hence, increasing the output and the envelope voltage. There are limitations to the effectiveness of these feedback paths because, after a fashion, they work against each other. As the envelope detector shows a deficiency in signal due to a large signal-to-noise ratio, it will try to increase the signal out of the variable attenuator, while at the same time the peak signal detector is trying to decrease the signal from the variable attenuator. Serious degeneration of this system is avoided, however. If the signal-to-noise ratio is unusually low, the average peak signal is not generally large. This leaves a relatively large portion of the dynamic response of the peak signal feedback path unused. The second solution to this apparent dilemma is proper "weighting" of the two feedback paths; this is done in the mixing circuit.

One of the problems with the diode type of detector (Figure 6) in detecting a "square" envelope is the fact that the rise time for the envelope is much shorter than the fall time, resulting in degeneration of the envelope. This problem has been avoided, with no loss in detectability through noise, by slightly biasing the diodes (Figure 7). The envelope

is still imperfect, however, in the sense that its rise and fall times are not fast enough to measure the duration of a burst accurately.

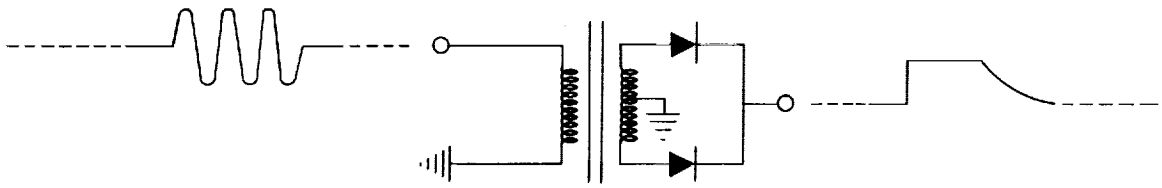

Figure 6—Full wave detector

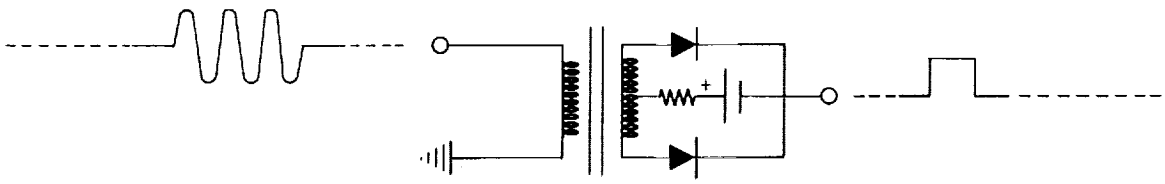

Figure 7—Biased full wave detector

By the use of a "slicer", it is possible to select a voltage at the halfway point of both the rising and falling edges of the envelope detector's output and feed this "sliced" voltage to a saturating amplifier (amp_5 in Figure 2), thus developing a new envelope waveform which has a fast rise and fall time. Although a measurement of the duration of this new envelope pulse may deviate a few percent from the actual pulse duration, this deviation will be constant regardless of the duration; thus, it can be easily dealt with by a calibration. Correction circuits which either stretch or compress this envelope pulse can be added.

DECOMMUTATOR PROPER

When the signal-to-noise ratio is small, there is a high probability that the voltage envelope will have anomalies which in effect indicate a blank in the middle of a burst, and/or a burst in the middle of a blank. This is illustrated in the diagram "Decommutator timing 1" (Figure 8). Often there is some a priori information about the signal waveform. For example, several of the more recent satellites have a constant burst width and a constant blank width, i.e., $W_{1,1} = W_{2,1} = W_{3,1} \cdots$, and $W_{1,2} = W_{2,2} = W_{3,2} \cdots$, where $W_{0,1}$ and $W_{0,2}$ the sync burst and blank are also of known width.

The most general case, however, is when there is a lower limit on both the burst and the blank width, W_1 through W_{15}, a known upper limit on the burst widths W_1 through W_{15}, and the lower limit on W_0 is greater than the upper limit of W_1 through W_{15}. Once these limits are known for a given satellite's data, we can eliminate some of the aforementioned anomalies in the burst-blank envelope. If we know the minimum possible legitimate burst width and

G-199

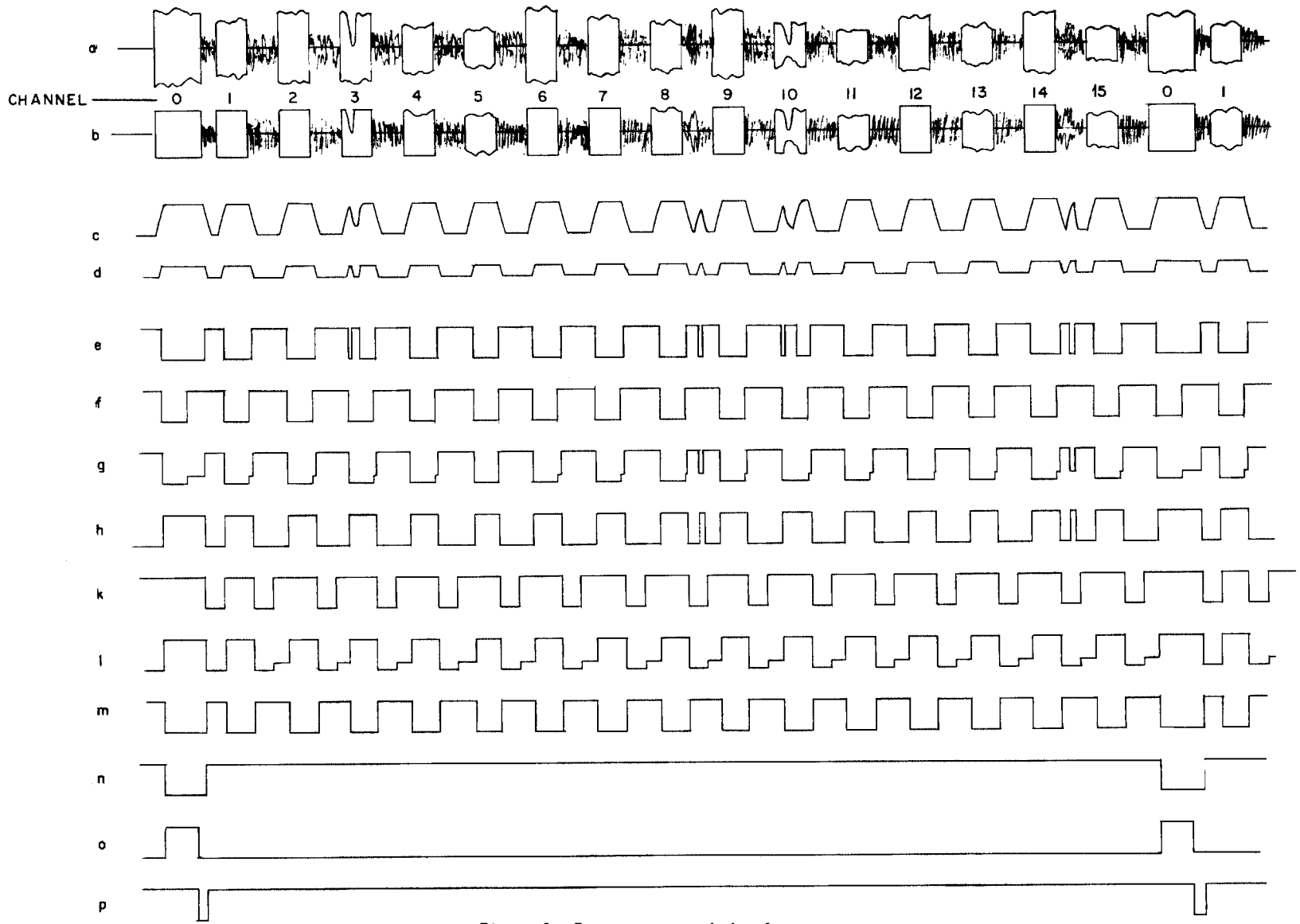

Figure 8—Decommutator timing 1

the minimum possible blank width, we can, with feedback networks, assure that the outputs have minimum burst and blank widths. This feedback arrangement involves "or_1", "inv_1", "or_2", "inv_2", "inv_3", "burst mono", and "blank mono" of the logic block diagram (Figure 2), where the "burst mono" and the "blank mono" are monostable multivibrators. This arrangement is sometimes referred to as the noise lockout circuits. The operation of this arrangement can be best understood by studying the timing 1 diagram (Figure 8). When the voltage at point e goes negative, implying the beginning of a burst, the burst mono will fire, driving the voltage at point f negative, and holding it negative for a preset length of time, T_{BS}. T_{BS} is one of the items of a priori information; it is the minimum possible legitimate burst width. Thus, even if the voltage at point e faltered because of noise in the signal, so long as it faltered before the burst mono's recovery time T_{BS}, the output of "or_1" would be properly restored in the burst interval. The timing 1 diagram shows bursts 3 and 10 to be cut by noise (point e) but restored by the burst mono feedback feature. The blank mono performs the same function during the blank interval. The diagram also shows blanks 8 and 14 cut by noise (point e) but restored by the blank mono.

When the burst-blank envelope has been restored, there remains the problem of selecting the sync burst. This can be done if we know the width of the largest legitimate burst in channels W_1 -W_{15}, and if we know that the sync burst is wider than any of the other bursts. The sync burst is selected through the logic of "and_1", "mono FF_3", "and_2", "FF_4", "and_3", and "and_4" (Figure 2). The interactions of these components are shown on the diagrams of Figures 8 and 9. Let us start the analysis of this sync search system in the middle of a frame where FF_4 is enabling and_4 to trigger the binary counters FF_7 through FF_{10}. When the binary counter has completed its modulus 16 count, the channel 15 output from the matrix, which had been negative from the beginning of burst 15, returns to ground, indicating the end of blank 15 and hence the end of a frame. As this voltage goes positive it resets FF_4, thereby enabling the sync search system to look for sync. FF_4, in its reset condition, enables and_1 in such a way that the next burst envelope will trigger mono FF_3, a monostable multivibrator whose "on time" is slightly greater than the greatest possible nonsync burst time but shorter than the sync burst time. If the burst which triggered mono FF_3 is longer than the FF_3 time, there will be an output from and_2, which in turn sets FF_4 so that and_4 is again enabled, and the burst-blank envelope is permitted to trigger the binary counter. Thus the counter stays reset to zero until a sync pulse is recognized, and is then permitted to count. It counts until it is through channel 15, and then waits for another sync pulse. If the noise on the input signal is so severe that the noise lock-out circuits cannot completely and correctly reconstruct the burst-blank envelope, the effect is that the counter counts through section 15 before the actual section 15 data arrives. In this case the sync search circuit will begin to look at each burst envelope beyond the one which set the counter to zero, to see if it is long enough to be the sync pulse. If it were not for and_3 this could lead to occasional false sync indications. These would occur if a burst-blank combination were shorter than mono FF_3. In that case FF_3's output would

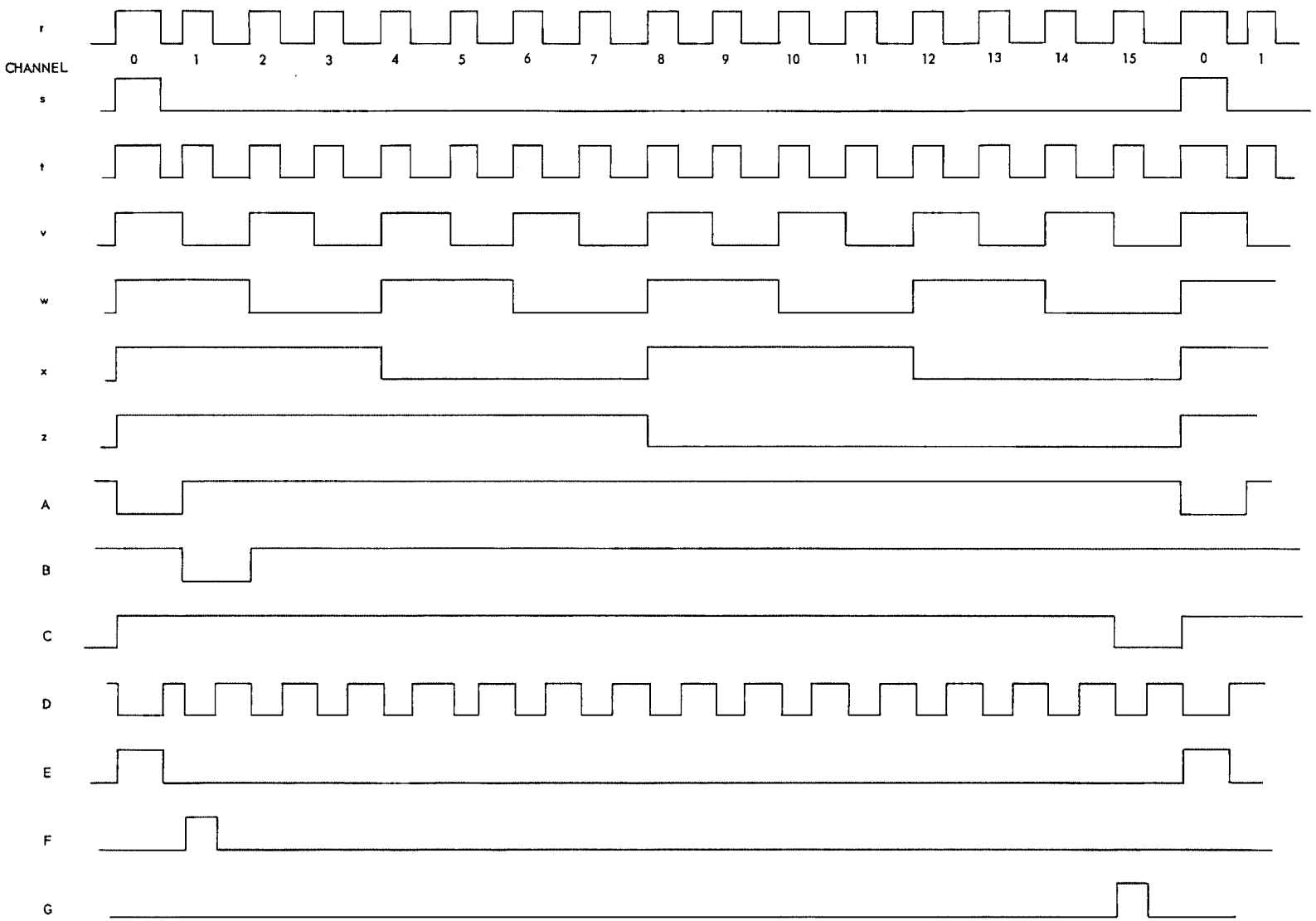

Figure 9 — Decommutator timing 2

be falling negative after reacting to burst A when the burst-blank input to and_2 was negative due to burst B. This would yield a false sync indication and cause the loss of at least one frame of information. In order to avoid this, at the end of each burst, FF_3 is reset by and_3, even though it has not run its natural time. Two features of this sync search system should be borne in mind: (a) It will not look for a sync pulse unless the counter has run its course through 15 and is standing by on the zero count. (b) After the binary counter has returned to zero, each burst envelope is examined individually to see if it is the sync pulse, and if it is not, FF_3 is reset.

The counter is composed of four standard flip-flops, interconnected as a standard, binary scale-of-16 counter. For telemetry systems in which a frame is composed of something other than 16 burst-blank pairs, the counter can be either added to or cut shorter than 16. This counter controls a diode matrix, which converts a vinary voltage combination on four wires to a single voltage on one of sixteen possible wires. During the sync burst time there is a voltage on the channel zero output, and during the first burst-blank time after the sync, there is a voltage on the channel one output. Thus the voltages on the sixteen outputs of the matrix define the time, for each channel, from the beginning of the burst to the end of the blank. In order to define the burst time and the blank time individually for each channel, we can "logically and" the outputs of the matrix with the burst envelope or with the blank envelope. (The burst envelope is that one which is negative during the burst time, and the blank envelope is the one which is negative during the blank interval.) This "logical and" operation is performed in blocks and_6 through and_{21} (Figure 2). Each of these "and" circuits is basically two transistors whose emitter-collector circuits are connected in series, and whose output then depends on the base of both transistors being driven negative.

Thus, there is a pulse with which it is possible to measure the burst or blank width of any channel. The frequency within each burst must also be measured. We have available now, in the matrix outputs, voltage gates which define the time of each channel. We can therefore gate the input with these voltages, and have the frequency of each channel on one of sixteen separate "leads". This is most easily done if the input has short rise and fall times and is first shaped into a voltage which starts at ground and goes negative. This shaping is done with a Schmitt circuit. The easiest way to measure the frequency of such a gated waveform with standard equipment is by an indirect method, viz., by measuring the ten-period average on a standard decade counter. If this is the way chosen to measure periods, care must be taken that the first ten periods out of the "and" circuits are all representative of the frequency within a given burst. Recall that we are enabling these "and" circuits with the burst envelope and the output of a Schmitt circuit which serves to shape the input signal. The exact starting time of the burst envelope depends on the triggering level of several amplifiers and, most of all, on the time constants of the envelope detector circuit. These factors, coupled with the fact that the varying voltage within the burst starts on a pseudo-random phase angle, result in the

Schmitt circuit's output having a pseudo-random phase relationship with the burst envelope. The result of directly "anding" these two waveforms is that the first period of the ten-period average could appear to be shorter than the other periods, thus indicating that the frequency within any burst is higher than it actually is. We can remedy this situation by abolishing the first period after the burst gate. Starting with the second period, the periods will be full and not shortened by a random phase relation. The elimination of the first period after the beginning of the burst gate is accomplished by and_6, and_7, and FF_6. Waveforms H and D of the timing 3 diagram (Figure 10) show the pseudo-random phase relationship between the shaped input and the derived burst envelope. When the output of and_6 first goes positive it sets FF_6 to enable and_7.. And_7 does not have an output until and_6 again goes negative; thus, the first period out of and_7 is truly representative of the frequency within that burst.

As has been noted previously, once FF_4 enables and_4, the binary counter continues to count with the input envelope until it counts through 15 and resets zero, whereupon it resets FF_4 so that and_4 is disabled until another sync pulse is detected. Thus the 0 output of the matrix is negative, so that the 0 output "and gate" is enabled and is susceptible to all the "trash" which might be on its input while the sync search circuit is looking for a sync pulse in a noisy signal. To avoid this spurious output, there is incorporated a "zero channel lockout" feature which is composed of FF_5 and and_5. And_3 has an output each time that mono FF_3 fires and finds the pulse that caused it to fire to be shorter than FF_3 itself, and, hence, not a sync pulse. Thus an output from and_3 implies that the first burst after the counter reset to zero was not a sync pulse, and therefore that the system is temporarily out of sync. This pulse from and_3 is used to set FF_5 to disable and_5 and hence disable and_6. And_5 stays disabled until the next output from the number 15 lead of the matrix, which resets FF_5 on the presumption that the system is in sync again. Thus, when the system is out of sync we choose to lose the output of section zero for one frame rather than have many confusing spurious outputs.

OPERATING PROCEDURE FOR THE DECOMMUTATOR

Step 1—Set the Clippers

An input signal can be fed to the decommutator either through the rear panel connector or via a BNC connector on the front panel. These two connect directly to the clippers (see Frontispiece), which serve to make the peak amplitude of the input signal constant. Clipping voltage is controlled by the two knobs, each labeled "clipper", on the front panel. One knob is for clipping the positive peaks, and the other for clipping the negative peaks. The clippers should be set so that the signal is clipped evenly on both sides and so that the majority of the bursts have the same peak amplitude. Thus, the clippers serve to eliminate most of the peak-to-peak modulation. The raw input should

have a peak-to-peak value of no more than 5 volts, but no less than 1/2 volt. Its dc level can be anything between ground and +20 volts, but should not be negative since the input capacitor is polarized to handle only a positive dc input voltage. The input signal, after it has been clipped, is available for viewing at the clipper test point on the front panel. It should be no less than 1/2 volt peak-to-peak, and preferably more nearly 1 to 2 volts. The clipping controls select the positive and negative voltages which are to be clipped. The least clipping occurs when these controls are turned fully counterclockwise.

Step 2—Set the Burst Adjust, Blank Adjust, and Sync Adjust Controls

The burst adjust, blank adjust, and sync adjust knobs, together with the high-low switches, control the time duration of the burst mono, blank mono, and mono FF_3 (Frontispiece and Figure 2). The burst monostable multivibrator should be set so that the duration of the output pulse is no greater in length (time) than the shortest possible burst, and the blank monostable multivibrator should be set so that the duration of the output pulse is no greater than the shortest possible blank. The high-low switches change the range over which the knobs can control these times. These control ranges are as noted in Table 1. All three adjust switches must be in the position appropriate for the input signal. After the range switch is properly set, the multi time* is set to the exact value desired by using the "burst adj", "blank adj" and "sync adj" control knobs, which actually control resistance values. Then this procedure is to be followed:

Table 1

Limits on Bursts, Blanks, and Sync Monostable Multivibrators

Adjust Switch	Range (msec)	
	High	Low
Burst	0.1-2.8	1.5-53
Blank	0.08-2.6	1.6-50
Sync	0.1-2.8	2-64

The burst adjust knob is set with the aid of an oscilloscope display of the voltage at the burst test point on the front panel. A typical waveform that might be seen at that point is illustrated in Figure 11. The total burst width is T_j, for j = 0,1,2,3 . . . . T_C is the length of time that voltage is added back into an "or gate" to eliminate discrepancies in the burst envelope, as explained previously. The interval T_C, which is constant for each burst, should be set with the "burst adj" knob to be slightly less than the smallest T_j.

The blank adjust knob is set by monitoring, with an oscilloscope, the test point labeled "blank" and following the same reasoning used in setting the burst adjust knob. Now the adjustable level T_C should be set to be slightly shorter than the shortest blank.

The sync adjust knob is set by using an oscilloscope to view the voltage at the test point FF_{-3} and adjusting, with the knob, the duration of this pulse to be longer than the

*Multi time is the time elapsed from when a monostable multivibrator is triggered until it recovers (T_C in Figure 11).

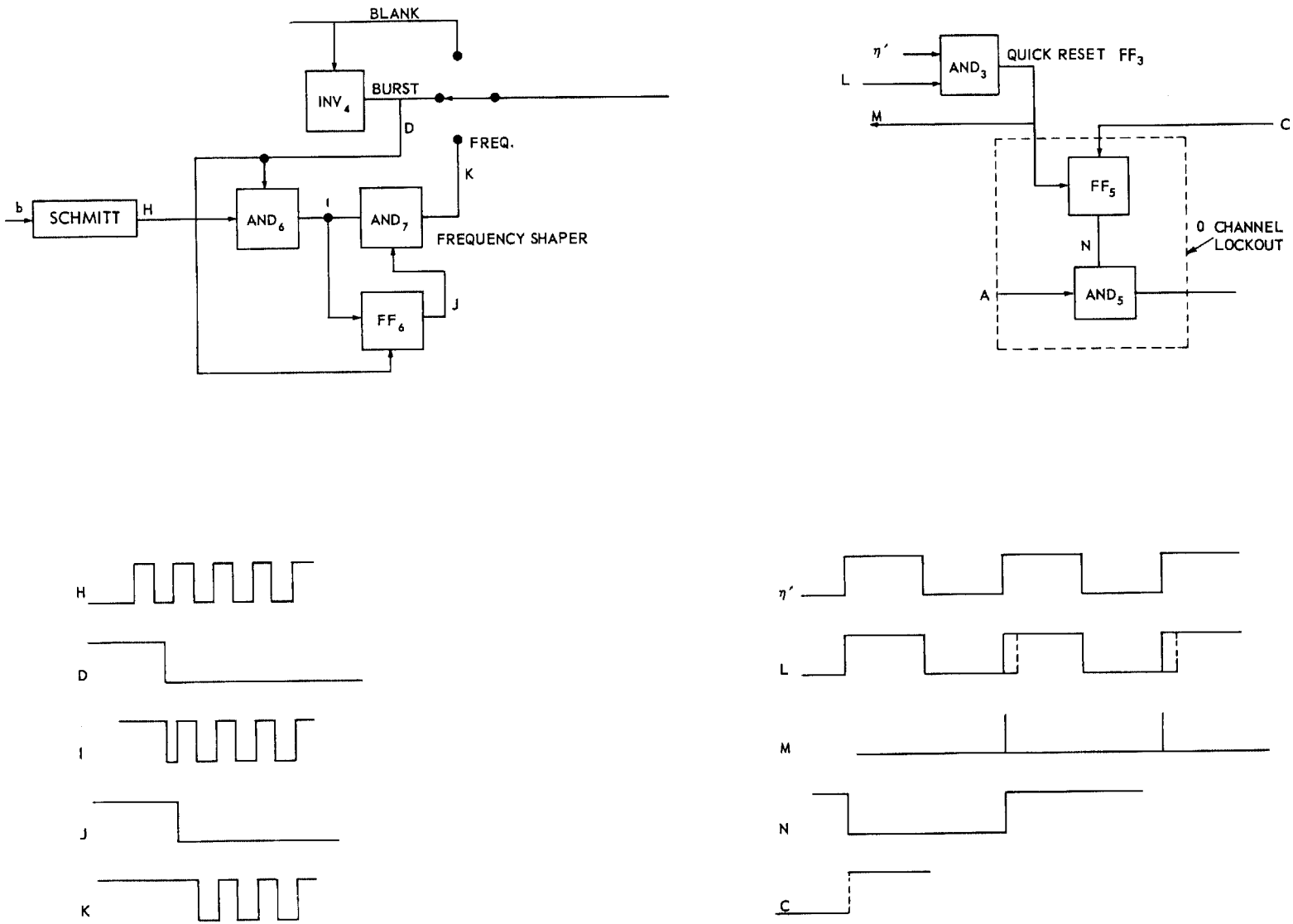

Figure 10—Decommutator timing 3

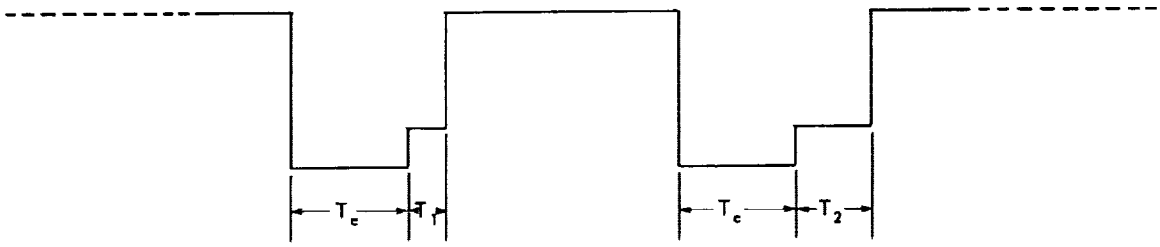

Figure 11 — Burst mono added to detected burst in or_1

longest nonsync pulse in the telemetry frame but shorter than the sync pulse itself. When the adjustment is correct there will be only one pulse per frame at this test point, and that pulse will occur at the time of the sync pulse. If the adjustment is incorrect in that the pulse FF_3 is longer than the sync pulse, there will be more than one FF_3 pulse per frame of information. If FF_3 is adjusted to be too short, i.e. not longer than the longest nonsync pulse, then, although there will be only one FF_3 pulse per frame it is possible that this pulse might not occur during the sync pulse time but, instead, during any burst from the time of the sync burst to the time of the last burst in the frame.

UTILIZING THE OUTPUTS

The outputs which are available on the back panel connector are somewhat dependent on the job for which the particular decommutator was intended. However all the decommutators should have at least the following outputs:

The burst envelopes on 16 wires, one wire for the burst envelope from each channel.

Sixteen signals on 16 additional wires, one wire for each one of 16 channels, carrying a signal dependent upon the setting of the front panel selector switch labeled "burst-blank-freq.". If this switch is set to "burst", the sixteen wires carry the sixteen burst envelopes. If the switch is on "blank", the wires carry the sixteen blank envelopes, and if the switch is on "freq.", the wires carry the sixteen bursts of frequency.

The output of the AGC circuit which is equal to the input signal with most of the modulations removed. This is sometimes used as an input to a comb filter.

The output of input board 1 (Figure 12).

The input of input board 2 (Figure 12).

The continuous burst-blank envelope, negative during the burst time.

The output BNC connector on the front panel has a signal which is dependent on both the "burst-blank-freq." switch, and the output switch. The "output sw." determines which channel is put on the output BNC and the b-b-f switch determines which parameter of that channel is to be considered: the burst envelope, the blank envelope, or the frequency. The front panel test point called "sync" contains a pulse which is the difference between the sync pulse and the FF_3 pulse.

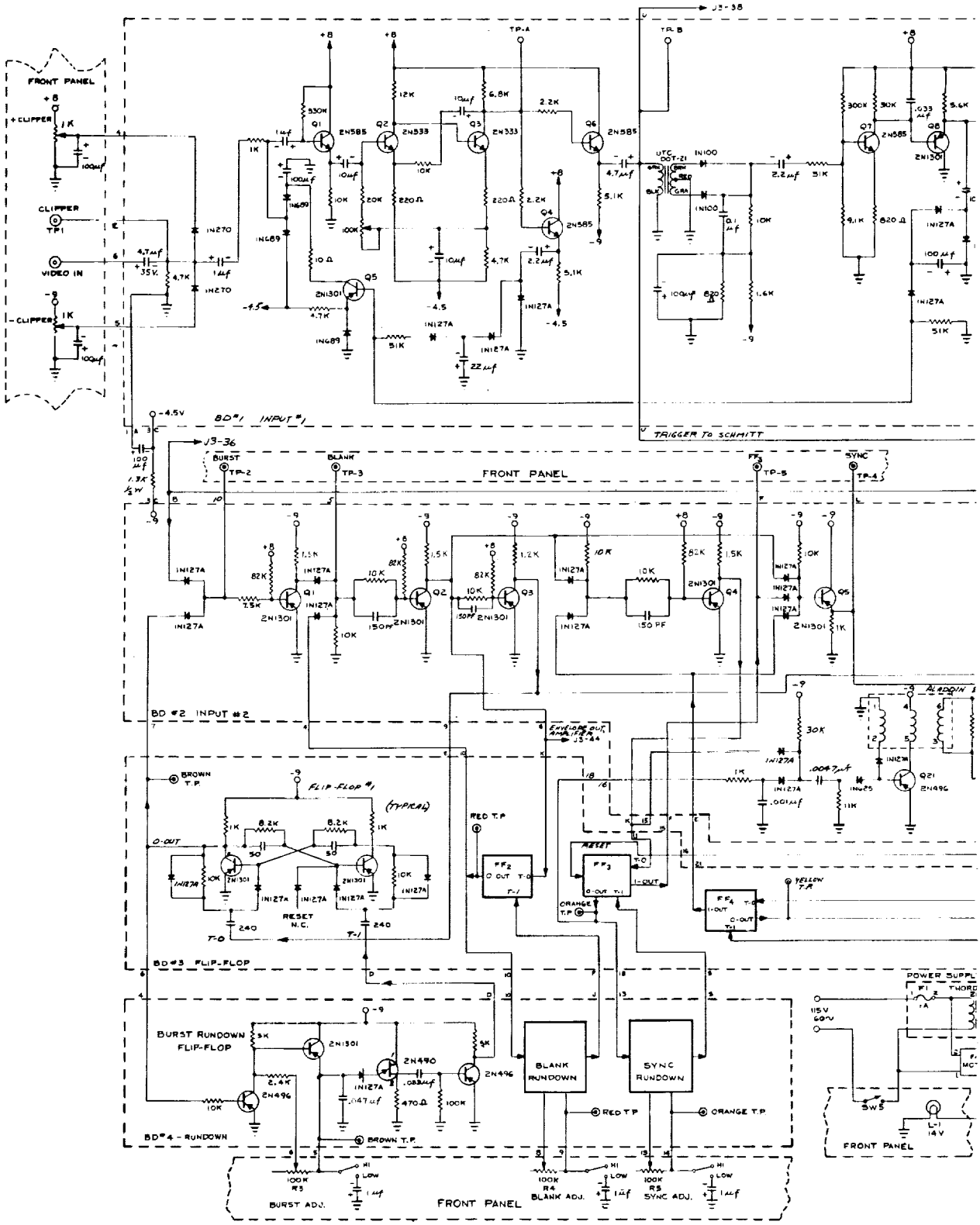
FRONT PANEL
+ CLIPPER
CLIPPER
TP1
VIDEO IN
- CLIPPER
J3-38
TP-A
TP-B
TRIGGER TO SCHMITT
BD #1 INPUT #1
J3-36
BURST
TP-2
BLANK
TP-3
FRONT PANEL
TP-5
SYNC
TP-4
BD #2 INPUT #2
ENVELOPE OUT AMPLIFIER
J3-44
BROWN T.P.
FLIP-FLOP #1
(TYPICAL)
RESET N.C.
RED T.P.
RESET
ORANGE T.P.
YELLOW T.P.
BD #3 FLIP-FLOP
BURST RUNDOWN FLIP-FLOP
BLANK RUNDOWN
SYNC RUNDOWN
BD #4 - RUNDOWN
BROWN T.P.
RED T.P.
ORANGE T.P.
POWER SUPPL
115V 60~
SW5
L-1 14V
FRONT PANEL
BURST ADJ.
BLANK ADJ.
SYNC ADJ.
FRONT PANEL

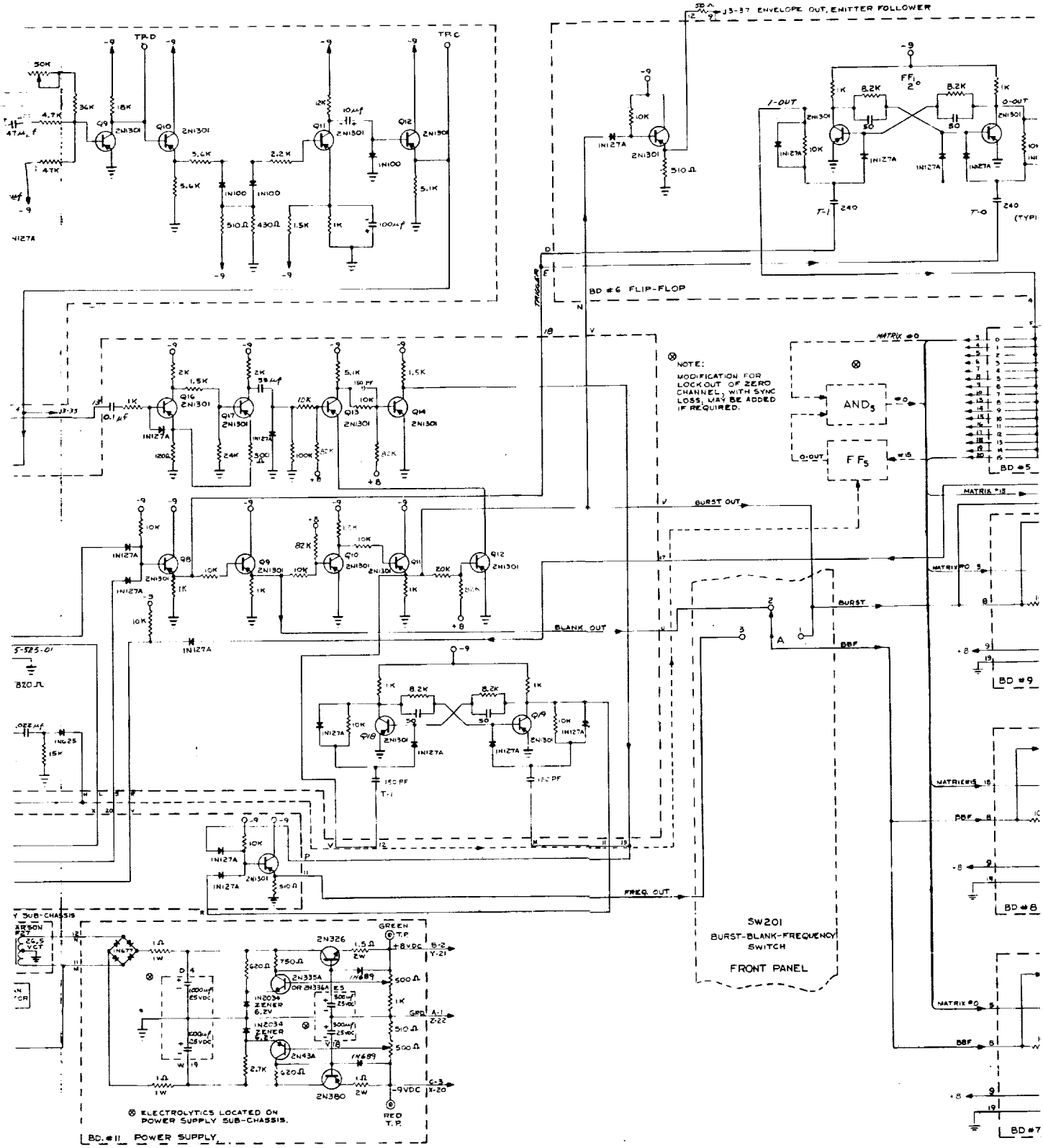
J3-37 ENVELOPE OUT, EMITTER FOLLOWER
BD #6 FLIP-FLOP
NOTE:
MODIFICATION FOR LOCKOUT OF ZERO CHANNEL, WITH SYNC LOSS, MAY BE ADDED IF REQUIRED.
AND3
FF5
MATRIX #0
MATRIX #13
MATRIX #15
BURST OUT
BURST
BLANK OUT
BBF
FREQ. OUT
SW201
BURST-BLANK-FREQUENCY SWITCH
FRONT PANEL
BD #5
BD #9
BD #8
BD #7
BD #11 POWER SUPPLY
ELECTROLYTICS LOCATED ON POWER SUPPLY SUB-CHASSIS.

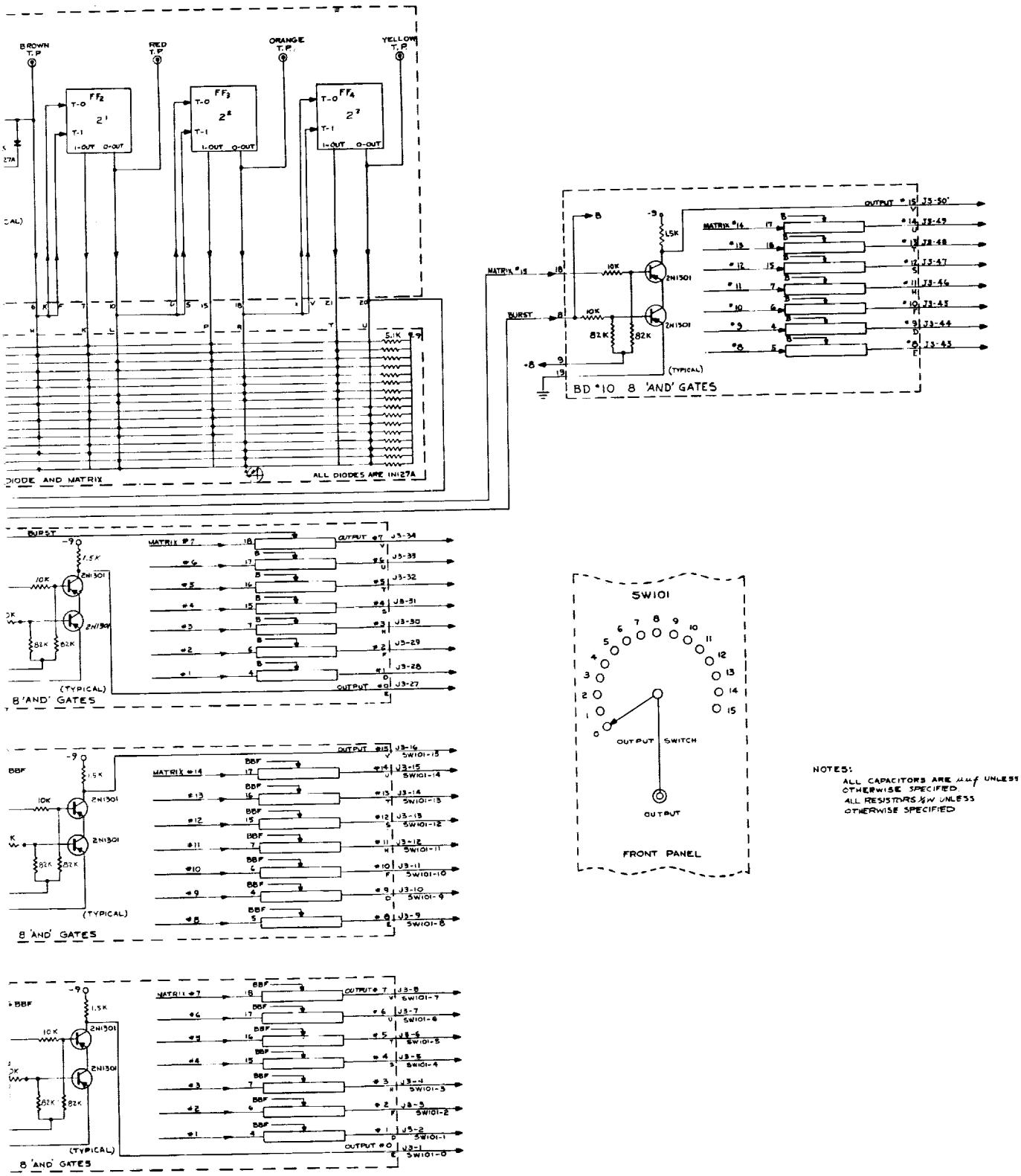

Figure 12a — Schematic of the decommutator

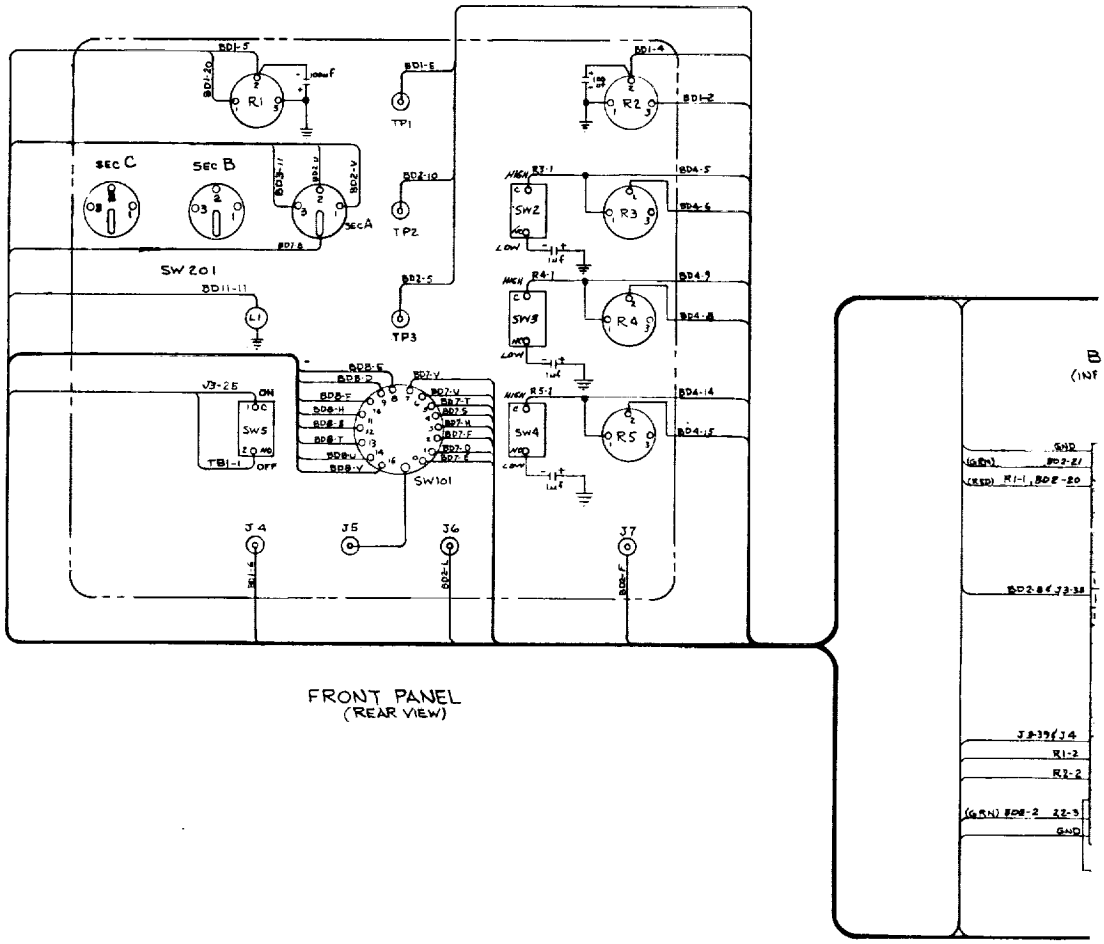

FRONT PANEL
(REAR VIEW)

REFERENCES

1. Matthews, W., "Earth Satellite Instrumentation," Electrical Engineering 76(7):562-567, July 1957

2. Matthews, W., "Telemetering in Earth Satellites," Electrical Engineering 76(11):976-981, November 1957

3. Rochelle, R. W., "Earth Satellite Telemetry System," Electrical Engineering 76(12): 1062-1065, December 1957

4. Shirman, J., "Designing a Stable Transistor AGC Amplifier," Electronic Design 8(10): 44-47, May 11, 1960

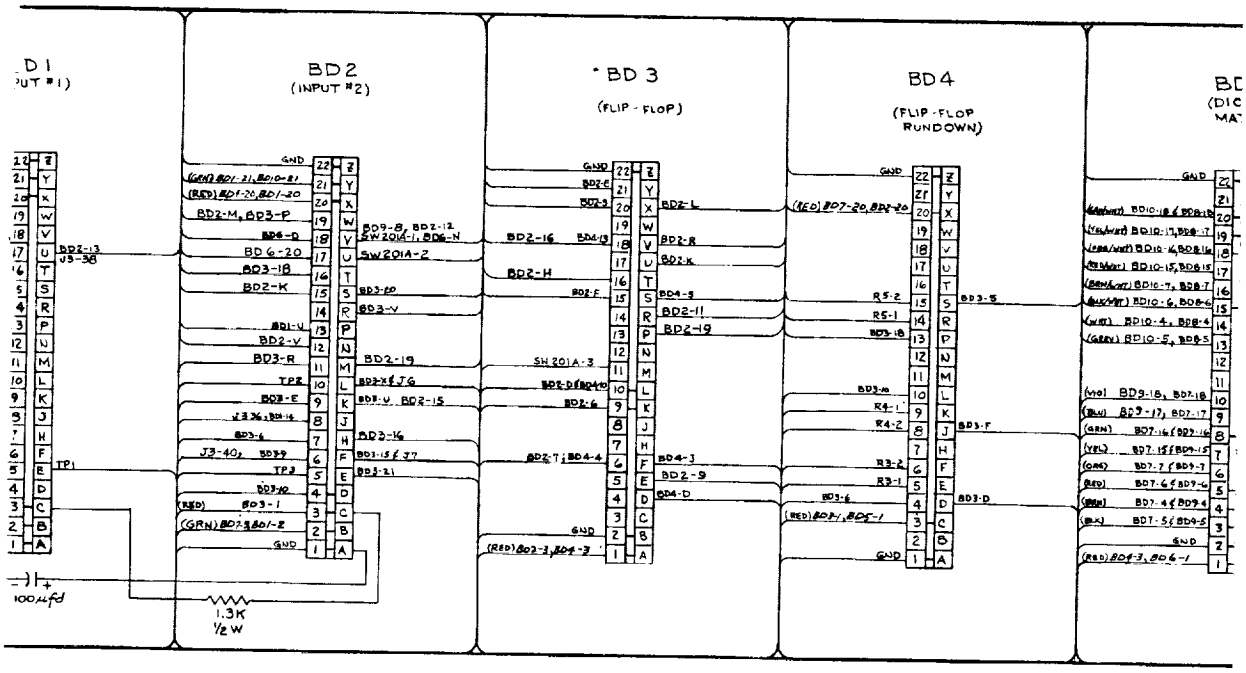
BD2
(INPUT #2)
BD 3
(FLIP - FLOP)
BD4
(FLIP - FLOP
RUNDOWN)
100μfd
1.3K
½ W

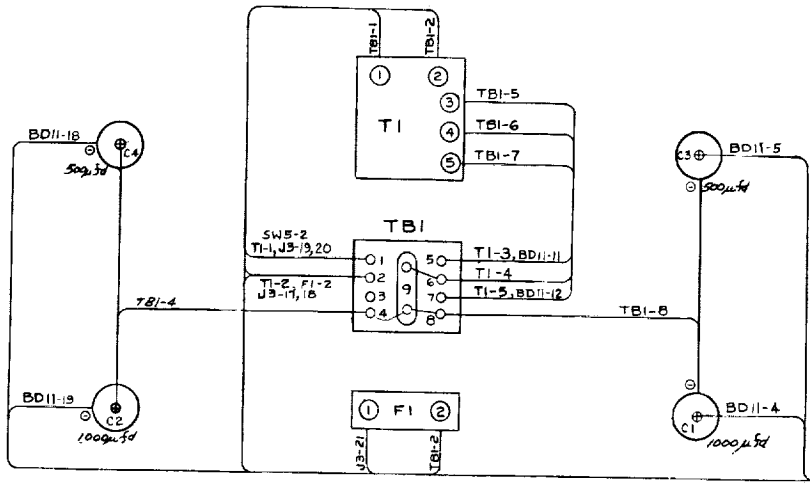

POWER SUPPLY - SUB-CHASSIS

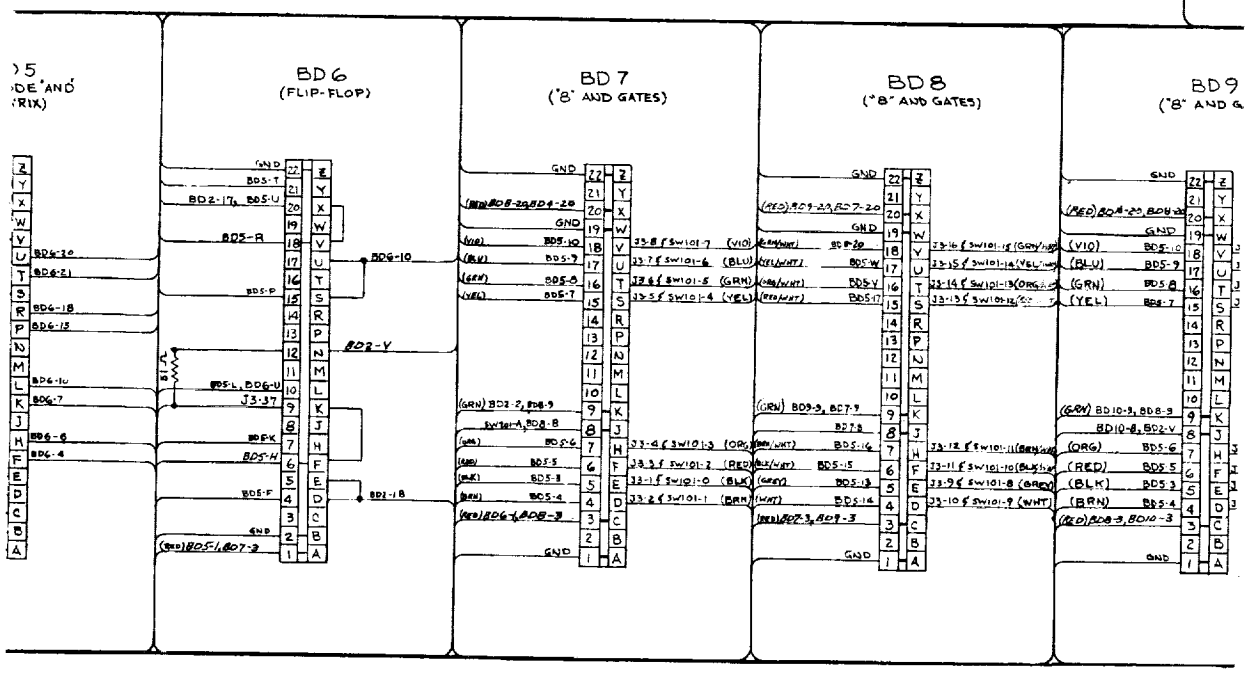

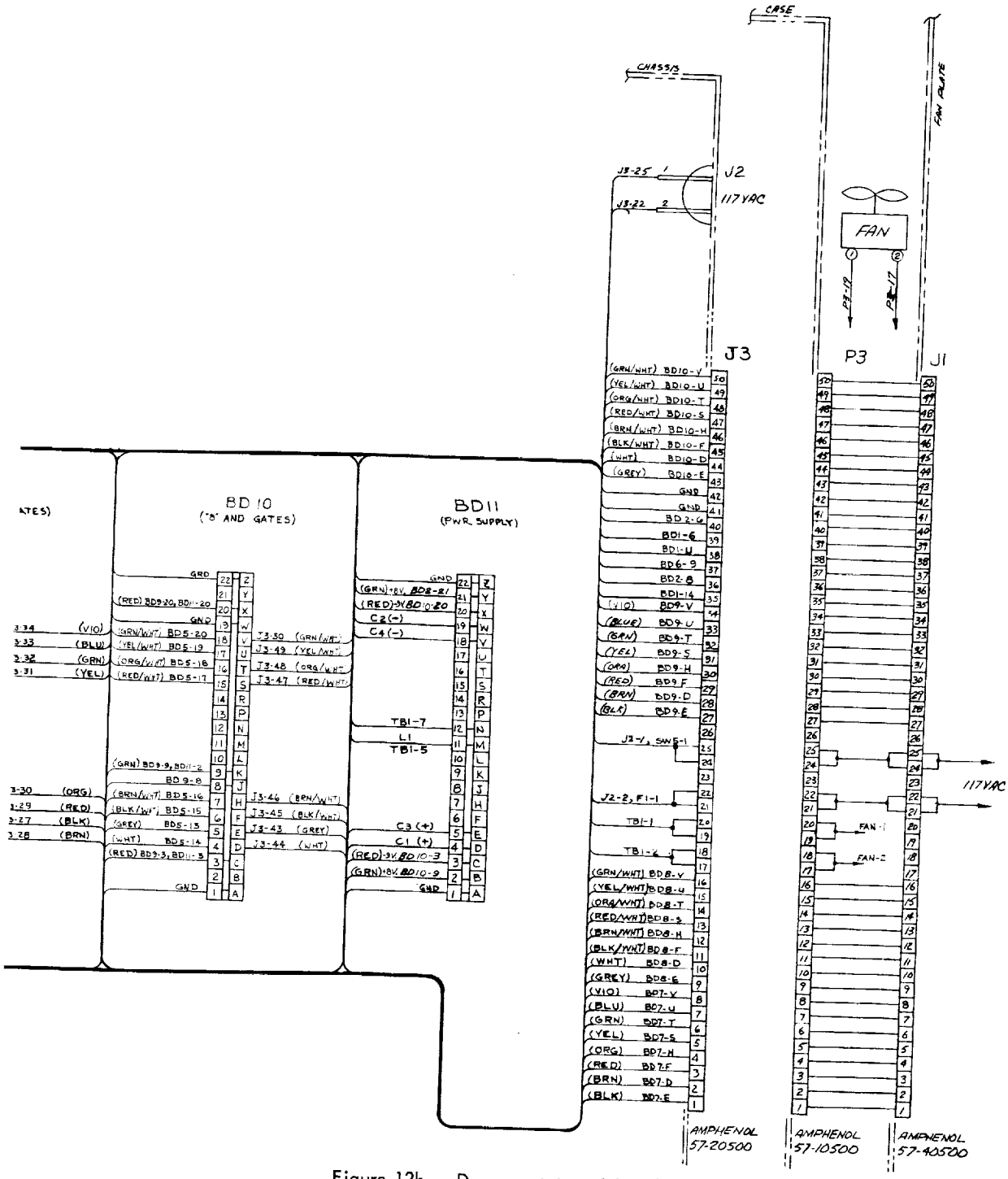

Figure 12b — Decommutator wiring diagram

NASA TN D-1292
National Aeronautics and Space Administration.
A PULSED FREQUENCY MODULATION DECOMMUTATOR. H. H. Levy, A. M. Demmerle, and J. L. Tinsley. June 1962. 18p. OTS price, $0.50. (NASA TECHNICAL NOTE D-1292)

The pulsed frequency modulation (PFM) type of telemetry is briefly described, and the function of a decommutator for this type of telemetry is explained. Circuit details, the logic description, and complete operating procedures for the decommutator are included. All the inputs and outputs are described.

I. Levy, H. H.
II. Demmerle, A. M.
III. Tinsley, J. L.
IV. NASA TN D-1292

(Initial NASA distribution: 17, Communications and sensing equipment, flight; 18, Communications and tracking installations, ground; 19, Electronics.)

NASA

NASA TN D-1292
National Aeronautics and Space Administration.
A PULSED FREQUENCY MODULATION DECOMMUTATOR. H. H. Levy, A. M. Demmerle, and J. L. Tinsley. June 1962. 18p. OTS price, $0.50. (NASA TECHNICAL NOTE D-1292)

The pulsed frequency modulation (PFM) type of telemetry is briefly described, and the function of a decommutator for this type of telemetry is explained. Circuit details, the logic description, and complete operating procedures for the decommutator are included. All the inputs and outputs are described.

I. Levy, H. H.
II. Demmerle, A. M.
III. Tinsley, J. L.
IV. NASA TN D-1292

(Initial NASA distribution: 17, Communications and sensing equipment, flight; 18, Communications and tracking installations, ground; 19, Electronics.)

NASA

NASA TN D-1292
National Aeronautics and Space Administration.
A PULSED FREQUENCY MODULATION DECOMMUTATOR. H. H. Levy, A. M. Demmerle, and J. L. Tinsley. June 1962. 18p. OTS price, $0.50. (NASA TECHNICAL NOTE D-1292)

The pulsed frequency modulation (PFM) type of telemetry is briefly described, and the function of a decommutator for this type of telemetry is explained. Circuit details, the logic description, and complete operating procedures for the decommutator are included. All the inputs and outputs are described.

I. Levy, H. H.
II. Demmerle, A. M.
III. Tinsley, J. L.
IV. NASA TN D-1292

(Initial NASA distribution: 17, Communications and sensing equipment, flight; 18, Communications and tracking installations, ground; 19, Electronics.)

NASA

NASA TN D-1292
National Aeronautics and Space Administration.
A PULSED FREQUENCY MODULATION DECOMMUTATOR. H. H. Levy, A. M. Demmerle, and J. L. Tinsley. June 1962. 18p. OTS price, $0.50. (NASA TECHNICAL NOTE D-1292)

The pulsed frequency modulation (PFM) type of telemetry is briefly described, and the function of a decommutator for this type of telemetry is explained. Circuit details, the logic description, and complete operating procedures for the decommutator are included. All the inputs and outputs are described.

I. Levy, H. H.
II. Demmerle, A. M.
III. Tinsley, J. L.
IV. NASA TN D-1292

(Initial NASA distribution: 17, Communications and sensing equipment, flight; 18, Communications and tracking installations, ground; 19, Electronics.)

NASA