N63-11056
code 1

NASA TN D-1690

32p

NASA TN D-1690

TECHNICAL NOTE

D-1690

A CONTRIBUTION TO THE THEORY OF FOLDING DEFORMATIONS IN EXPANDABLE STRUCTURES WITH A PARTICULAR APPLICATION TO TOROIDAL SHELLS

By H. U. Schuerch and G. M. Schindler

Prepared Under Contract NASr-8 by
ASTRO RESEARCH CORPORATION
Santa Barbara, California
for

NATIONAL AERONAUTICS AND SPACE ADMINISTRATION

WASHINGTON December 1962

NATIONAL AERONAUTICS AND SPACE ADMINISTRATION

TECHNICAL NOTE D-1690

A CONTRIBUTION TO THE THEORY OF FOLDING DEFORMATIONS IN EXPANDABLE STRUCTURES WITH A PARTICULAR APPLICATION TO TOROIDAL SHELLS

By H. U. Schuerch and G. M. Schindler

Astro Research Corporation
Santa Barbara, California

SUMMARY

Outlines for a theory of large deformations, including folding, of arbitrary inextensible membranes are presented. The approach to the problem utilizes isometric mapping techniques complemented by the additional topological constraints of the folding problem in real membrane structures. The theory is applied to an inextensible membrane in the form of a torus. Rigorous solutions are found for a particular class of deformations. Theoretical results are verified, qualitatively, by realization of predicted folding patterns on two torus models.

INTRODUCTION

Expandable pneumatic structures, i.e., structures that can be packaged into small volumes and erected by inflation into relatively rigid devices, have been considered for a number of space missions. Of particular interest is the design of expandable large sized manned orbital space laboratories in the form of a modified torus, either partially or fully constructed from flexible materials.

Other examples where expandable structures can find applications are the large surfaces required for reflectors of electromagnetic radiation (Echo satellite), collectors for solar energy, and

expanding and retracting devices for manipulation of instruments during flight or re-entry, or for operations after landing on foreign celestial bodies.

In many of these applications the operating pressure and/or the size of the expandable structure is such that considerable structural forces arise from pressurization. This requires a wall construction which is strong and, as a consequence, stiff, at least in directions tangential to the surface. Thus, while optimum design and materials selection may result in a thin walled strong shell that retains sufficient bending compliance to allow relatively sharp bending radii, these designs exhibit normally sufficient membrane stiffness to limit the membrane strains to small values. As a limiting case, such structures can be considered as inextensible but completely flexible membranes.

A theory of "momentless" (i. e., flexible) shells with a detailed discussion of their inextensible deformation characteristics is presented, for instance, in reference 1. The discussion in reference 1 is limited, however, to shells of revolution and concerns itself primarily with infinitesimally small deformations in the normal sense of the theory of elastic structures. For the purpose of an analytical treatment of the packaging and folding problem of expandable structures a more general theory is required. Such a theory can be developed based upon isometric mapping techniques (references 2, 3, and 4).

This research has been performed with the support of the National Aeronautics and Space Administration.

SYMBOLS

E, F, G	Gaussian coefficients of the first fundamental form
R	radius of circumferential center line of torus
S	surface
$\bar{X}$	radius vector

f, g, h, k	auxiliary functions of (u, v)
n	integer
p	deformation parameter
u, v	curvilinear surface coordinates
x, y, z	Cartesian coordinates
λ	direction of propagation on surface
ρ	radius of meridonal circular torus section

The superscript * refers to functions of the deformed surface.

Subscripts in parentheses, such as $X_{(u)}$, refer to the variable of a function X.

Plain subscripts, such as X_u, indicate a partial derivative of the function X with respect to the variable u.

GENERAL CRITERIA FOR DEFORMATION OF INEXTENSIBLE MEMBRANES

Consider a thin walled structural shell. Its shape can be described by a neutral surface S located between the two faces of the shell. Assume that the neutral surface admits no membrane strains in tangential direction and that the shell is completely compliant in bending. Such a structural shape will be described as an inextensible membrane.

Let the neutral surface S be deformed continuously into a consecutive set of new surfaces $S^*_{(p)}$ where p is a continuously varying parameter. For the corresponding inextensional membranes to be deformable into the consecutive shapes described by the parametric set of surfaces S^*, the following conditions need to be satisfied:

(a) All surfaces of the set S^* must be isometric with S, i.e., the transformation $S \rightarrow S^*$ must retain all lengths (and, consequently, all angles) on the entire surface. Isometry of transformation satisfies the condition of zero membrane strain required by inextensible membranes.

(b) In the domains where the original surface S is continuous, the surfaces of the set S^* must also be continuous. It will not be required, however, that the derivatives of the surfaces S^* be continuous at all points. Thus, the deformation may involve ridges and/or folds along certain lines that may either be fixed on the surface or traveling over the surface with a variation of the deformation parameter p. The admission of slope discontinuities for the deformation of membranes constitutes a departure from the usual conventions of deformations in thin shells. For instance, closed analytical surfaces of continuously positive curvature (egg-surfaces) are normally considered as rigid (references 2 and 4). This is true only if deformations involving slope discontinuities are excluded.

(c) The topological characteristics of the surfaces S^* must be equal to the topological characteristics of the original surface S. This refers particularly to the surface connectivity (genus) and surface orientation (insides of closed surfaces must remain inside).

The condition of invariant connectivity excludes, for instance, the case of mapping a closed, periodic surface upon an infinitely extended open surface. An example of this is given in the mapping of a torus upon a corrugated tube, discussed in the section "Isometric Deformation of a Circular Torus."

The topological condition of surface orientation must be applied to exclude those deformations which, while isometric and continuous, would require the membrane to change sides by mutual permeation.

An example of admissible and inadmissible isometric deformations generated by reflection of the surface on intersecting planes and involving ridge formation is shown in figure 1.

BASIC EQUATIONS FOR ISOMETRIC DEFORMATION OF SURFACES

Let the inextensible membrane in consideration be represented by its neutral surface S . Its analytical expression may be given by the vector $\bar{X}_{(u, v)}$ extending from an origin 0 to a point P on the surface and referred to the three dimensional Euclidian system of coordinates (x, y, z) as shown in figure 2.

The parameters u and v describe a parameter net of curvilinear coordinates u = Constant and v = Constant on the surface S . The vector $X_{(u, v)}$ can be written in terms of its components as follows:

$$\bar{X}_{(u, v)} = \begin{pmatrix} x_{(u, v)} \\ y_{(u, v)} \\ z_{(u, v)} \end{pmatrix} \tag{1}$$

The "infinitesimal" vector $d\bar{X}$ from the point $P_{(u, v)}$ to the point $Q_{(u + du,\ v + dv)}$ is given by the components:

$$d\bar{X} = \begin{pmatrix} x_u\, du + x_v\, dv \\ y_u\, du + y_v\, dv \\ z_u\, du + z_v\, dv \end{pmatrix} \tag{2}$$

where the subscripts refer to the partial derivatives $x_u = \frac{\partial x}{\partial u}$, etc.

The absolute value of $d\bar{X}$ is equal to the length of the line element ds of the surface. The square of the differential length, ds^2 , can be obtained by scalar multiplication of $d\bar{X}$ with itself:

$$(ds)^2 = (d\bar{X} \cdot d\bar{X}) = E_{(u, v)} du^2 + 2F_{(u, v)} dudv + G_{(u, v)} dv^2 \tag{3}$$

This is the "first fundamental form" of the surface S with the Guassian fundamental functions of u and v :

$$
\begin{aligned}
E_{(u,\,v)} &= (x_u)^2 + (y_u)^2 + (z_u)^2 \\
F_{(u,\,v)} &= x_u x_v + y_u y_v + z_u z_v \qquad (4) \\
G_{(u,\,v)} &= (x_v)^2 + (y_v)^2 + (z_v)^2
\end{aligned}
$$

Consider now a second surface S^* which is represented by the vector $\bar{X}^*_{(u,\,v)}$ with the coordinates $x^*_{(u,\,v)}$, $y^*_{(u,\,v)}$, $z^*_{(u,\,v)}$ referred to the same parameters u, v as $X_{(u,\,v)}$. The two surfaces S and S^* are called locally isometrical if in the points u, v on S the differential length ds is equal to the differential length ds^* in the corresponding point u, v on S^* . This means that for arbitrary directions of propagation $\lambda = \frac{du}{dv}$ the equation

$$
\left(\frac{ds}{ds^*}\right)^2 = \frac{E du^2 + 2F du dv + G dv^2}{E^* du^2 + 2F^* du dv + G^* dv^2} = \frac{E\lambda^2 + 2F\lambda + G}{E^*\lambda^2 + 2F^*\lambda + G^*} = 1 \qquad (5)
$$

must be satisfied. Here $E^*_{(u,\,v)}$, $F^*_{(u,\,v)}$, $G^*_{(u,\,v)}$ are the Gaussian fundamental quantities of S^* referred to the same curvilinear surface coordinates u, v to which S is referred. The two surfaces S and S^* are entirely isometrical if equation (5) holds for all points (u, v) and for arbitrary directions λ . This is possible only if the following identities hold:

$$
E = E^*, \qquad F = F^*, \qquad G = G^* \qquad (6)
$$

Let the surface S be represented by

$$\bar{X}^* = \begin{pmatrix} x^*(u, v) \\ y^*(u, v) \\ z^*(u, v) \end{pmatrix} \tag{7}$$

The necessary and sufficient condition that S^* be isometrical to S is that the components x^*, y^*, z^* satisfy the following system of partial differential equations:

$$\left.\begin{aligned} (x^*_u)^2 + (y^*_u)^2 + (z^*_u)^2 &= E \\ x^*_u x^*_v + y^*_u y^*_v + z^*_u z^*_v &= F \\ (x^*_v)^2 + (y^*_v)^2 + (z^*_v)^2 &= G \end{aligned}\right\} \tag{8}$$

where E, F, G are the Gaussian fundamental quantities of the original surface S.

The entirety of surfaces which are isometrical to the given surface S is obtained from the entirety of solutions x^*, y^*, z^* of the system (8).

Trivial solutions of (8) can be found by rigid body displacements:

$$\left.\begin{aligned} x^* &= x + c_1 p \\ y^* &= y + c_2 p \\ z^* &= z + c_3 p \end{aligned}\right\} \tag{9a}$$

where c_1, c_2, c_3 are arbitrary constants and p is the continuously varying deformation parameter. Another class of isometric deformations is obtained by intersecting the surface by a plane and reflecting the portion of the surface on one side of the

plane upon the other side, such as shown in figure 1. For instance, if the reflecting plane is parallel to the xy-plane and is described by $z = p$, then the coordinates of the deformed surface are:

$$\left.\begin{aligned} x^* &= x \\ y^* &= y \\ z^* &= z \text{ for } z < p \\ z^* &= 2p - z \text{ for } z > p \end{aligned}\right\} \tag{9b}$$

This deformation generates normally a ridge along the line of intersection traveling on the surface with a change of location p of the reflecting plane.

Since the system of equations (8) is nonlinear in the derivatives of its functions, it will be difficult to find general solutions. In specific cases, it may be convenient to transform system (8) into a linear system by the following substitutions:

$$\left.\begin{aligned} x^*_u &= \sqrt{E} \cos f \cos g \\ y^*_u &= \sqrt{E} \cos f \sin g \\ z^*_u &= \sqrt{E} \sin f \end{aligned}\right\} \tag{10a}$$

$$\left.\begin{aligned} x^*_v &= \sqrt{G} \cos h \cos k \\ y^*_v &= \sqrt{G} \cos h \sin k \\ z^*_v &= \sqrt{G} \sin h \end{aligned}\right\} \tag{10b}$$

where $f_{(u, v)}$, $g_{(u, v)}$, $h_{(u, v)}$, $k_{(u, v)}$ are four auxiliary functions of u and v.

The first and third conditions of system (8) are implicitly satisfied by equations (10a) and (10b). The second condition in

system (8) yields the algebraic relation:

$$\cos f \cos h \cos (g-k) + \sin f \sin h = \frac{F}{\sqrt{EG}} \tag{11}$$

The integrability conditions for twice differentiable domains of the surface (i. e., domains excluding slope discontinuities) require:

$$\left.\begin{aligned} x^*_{uv} &= x^*_{vu} \\ y^*_{uv} &= y^*_{vu} \\ z^*_{uv} &= z^*_{vu} \end{aligned}\right\} \tag{12}$$

Differentiating equations (10a) and (10b) and substituting into equations (12)

$$\left.\begin{aligned} \frac{\partial}{\partial v}(\sqrt{E} \cos f \cos g) &= \frac{\partial}{\partial u}(\sqrt{G} \cos h \cos k) \\ \frac{\partial}{\partial v}(\sqrt{E} \cos f \sin g) &= \frac{\partial}{\partial u}(\sqrt{G} \cos h \sin k) \\ \frac{\partial}{\partial v}(\sqrt{E} \sin f) &= \frac{\partial}{\partial u}(\sqrt{G} \sin h) \end{aligned}\right\} \tag{13}$$

The system (13) constitutes three simultaneous differential equations for the four functions f, g, h, k of u and v which are, as an additional condition, related by the algebraic equation (11). These four equations are equivalent to the system (8), and may in specific cases be more convenient for the purpose of finding non-trivial, twice differentiable isometric deformations.

A general solution will not be attempted here. Instead, the specific case of an inextensible torus membrane will be investigated.

ISOMETRIC DEFORMATION OF A CIRCULAR TORUS

A class of deformations for a torus, as shown in figure 3, can be obtained explicitly by integration of equations (11) and (13). For the coordinate system shown, the radius vector to a point (u, v) on the torus is given by

$$\bar{X} = \begin{pmatrix} x_{(u,v)} \\ y_{(u,v)} \\ z_{(u,v)} \end{pmatrix} = \begin{pmatrix} (R + \rho \cos u) \cos v \\ (R + \rho \cos u) \sin v \\ \rho \sin u \end{pmatrix} \tag{14}$$

where R is the distance from the origin 0 to the centerline of the torus and ρ is the radius of the meridional circle which generates the torus by revolution about the z-axis .

The curvilinear coordinates u = Constant and v = Constant , in this case, represent parallel circles and meridians, respectively; u is the angle between the radius ρ and the xy-plane , v is the central angle between the plane containing the meridian v = Constant and the xz-plane . The coordinates u and v are equivalent to the latitude and longitude angles conventionally used as spherical coordinates.

By inspection of the coordinate geometry shown in figure 3, the line element of the torus is:

$$ds^2 = \rho^2 du^2 + (R + \rho \cos u)^2 dv^2 \tag{15}$$

and the Gaussian fundamental quantities become by comparing equation (15) with (3):

$$\left.\begin{aligned} E &= \rho^2 \\ F &= 0 \\ G &= (R + \rho \cos u)^2 \end{aligned}\right\} \tag{16}$$

Solutions for isometric deformations will now be restricted to

those where parallel circles remain curves in parallel planes $(z_v^* = 0)$.

With the expressions in equations (16), a set of solutions of equations (11) and (13) can then be given by:

$$\left.\begin{aligned} f &= \cos^{-1}\left(\frac{\sin u}{p}\right) \\ g &= -\pi + pv \\ h &= 0 \\ k &= pv + \frac{\pi}{2} \end{aligned}\right\} \qquad (17)$$

Inserting these solutions into equations (10a) and (10b) yields

$$\left.\begin{aligned} x_u^* &= -\frac{\rho}{p} \sin u \cos pv \\ y_u^* &= -\frac{\rho}{p} \sin u \sin pv \\ z_u^* &= \rho \sqrt{1 - \frac{1}{p^2} \sin^2 u} \end{aligned}\right\} \qquad (18a)$$

and

$$\left.\begin{aligned} x_v^* &= -(R + \rho \cos u) \sin pv \\ y_v^* &= (R + \rho \cos u) \cos pv \\ z_v^* &= 0 \end{aligned}\right\} \qquad (18b)$$

From these equations the components of $\bar{X}^*$ describing the surface S^* can be obtained by quadrature:

$$\left.\begin{aligned} x^* &= \frac{1}{p} (R + \rho \cos u) \cos pv - c_1 \\ y^* &= \frac{1}{p} (R + \rho \cos u) \sin pv - c_2 \\ z^* &= \rho \int_{u_0}^{u} \sqrt{1 - \frac{1}{p^2} \sin^2 \xi}\, d\xi - c_3 \end{aligned}\right\} \qquad (19)$$

The three integration constants c_1 , c_2 , and c_3 represent a rigid body translation which can be disregarded for further discussion.

In this case the surface S^* is generated by revolution of a meridional curve defined in the xz-plane by the parametric relation:

$$\left.\begin{aligned} x^*_{(u)} &= \frac{1}{p}\,(R + \rho \cos u) \\ z^*_{(u)} &= \rho \int_0^u \sqrt{1 - \frac{1}{p^2}\sin^2 \xi}\; d\xi \end{aligned}\right\} \qquad (20)$$

The integral expression of the second of equations (20) represents an elliptical integral of the second kind. Values for this integral, tabulated in reference 5, have been used for the construction of the meridional curves discussed in the subsequent section.

DISCUSSION OF RESULTS

Solutions for the meridional shapes according to equations (20) are shown in figure 4 for selected parameters p . If p is any value between zero and one, the curve consists of segments of real branches (figure 4(a)). The openings between these branches correspond to parameter values $u > \sin^{-1} p$ (i.e., to those values of u for which the radicand $(1 - \frac{1}{p^2}\sin^2 u)$ is negative). These solutions cannot satisfy the topological restraints for a complete torus surface and will therefore not be considered further.

It will be observed that the meridional curves described by equations (20) even for $p \geq 1$ are not necessarily closed; thus the conditions of equal topological connectivity between S and S^* is not satisfied a priori. Closed meridians can be obtained, however, by reflection. The simplest case is obtained by axial folding, that is, by reflection on a plane z = Constant through the parallel circles $u = \pm\frac{\pi}{2}$. The result is a lenticular section with two ridges, as

shown in figure 4(c). This reflection can be expressed mathematically by the convention that the square root under the integral in equation (20) be taken positive for $-\frac{\pi}{2} < u < \frac{\pi}{2}$ and negative for $\frac{\pi}{2} < u < \frac{3\pi}{2}$.

With the convention of simple reflection at $u = \pm\frac{\pi}{2}$, closed curves are obtained for all values of $p \geq 1$. For $p = 1$, a circle is obtained which generates exactly the original torus (figure 4(b)). As p approaches infinity, the meridional curve degenerates into a line covering twice the z-axis from $-\rho\frac{\pi}{2}$ to $+\rho\frac{\pi}{2}$ (figure 4(d)).

A set of more general closed meridional sections can be obtained by reflection on planes through u = Constant and $u + \pi$ = Constant , as shown for the case $p = 2$ in figure 5(a). Further shapes, particularly shapes of vanishing cross-sectional area, may be obtained by subsequent reflections on other planes z = Constant as shown in figure 5(b).

A similar situation exists with respect to the circumferential coordinate v : Topological connectivity of the surface in circumferential direction requires that the surface S^* be periodic in v with the period 2π . This can be accomplished, for instance, by a circumferential folding technique as follows:

Consider n equal segments of the deformed torus where the end meridians of each segment enclose a central angle of $2\pi\frac{p}{n}$. Each segment can now be reflected on a vertical plane bounded by the z-axis , intersecting the segment at an angle $\frac{p+1}{n}\pi$. By this reflection, the segment will be folded into itself and the increment in central angle between end meridians becomes $\frac{2\pi}{n}$. By joining all n segments, the topological periodicity condition that the end of the last segment $v = 2\pi$ coincide with $v = 0$ is satisfied. Figure 6 shows a circumferential folding schematic for $p = 3$, $n = 2$.

By this method certain domains of the deformed surface are

covered by the membrane in multiple layers. The minimum number of layers is three for $1 < p < 3$. For $p = 3$, the whole torus domain is triply covered. Further increase of $3 < p < 5$ will require quintuple coverage of certain domains up to $p = 5$, etc.

Finally, it should be remarked that the necessity for circumferential folding disappears if the torus can be cut along any meridian (torus segment). Such a structure may be folded into a tight scroll of vanishing enclosed volume and frontal area.

EXPERIMENTAL VERIFICATION

Qualitative verification of the theoretical data presented has been obtained by experimentation with two torus models. For this purpose, a full and a quarter torus have been fabricated with the following overall dimensions:

$$R = 19.5''$$

$$\rho = 3.5''$$

The method of fabrication consists of winding two overlapping layers of 2.5 mil thickness adhesive-coated tape on an inflatable mandrel made from a standard-size 670-15 automotive inner tube. The tape is applied in such a manner that the adhesive-coated side of the two layers are in mutual contact. This process results in an average wall thickness of 7 mils. After completion of the winding process, the rubber tube is removed through a slit, and the slit is repaired for the closed torus by an overlay of tape. The models fabricated in this fashion approximate closely the idealized conditions of inextensible membranes.

The two torus models are shown in figures 7 and 8 in their expanded condition. Figure 9 shows the folded shape of the complete torus with circumferential and axial folding according to the folding schematic shown in figures 5(b) and 6. Figure 10 shows the quarter torus segment folded into a closed shell ($p = 4$) exhibiting the predicted lenticular meridional shape. Figure 11 shows the torus segment in a tight scroll according to figure 4(d).

An interesting variant of folding deformation deviating from

rotational symmetry is shown in figure 12. This shape involves deformation of the original parallel circles u = Constant into leafed curves resembling epicycloids. The reverse fold required at the cusps between leafs is topologically possible since the cross-section at these meridians degenerates into a double line at the reverse fold locations. While, in principle, the leafed shape is possible for a completely closed torus, attempts to produce this pattern from the original full torus were not successful, indicating that no continuous isometric and topologically invariant set S^* exists between the leafed "epicycloid" shape and the original complete circular torus.

CONCLUDING REMARKS

It is clear that, for instance, the circumferential folding technique shown in figure 6 in its pure form is possible only for infinitely thin membranes. For practical structural shells of finite thickness, such a problem can be overcome, for instance, by a periodic variation of the torus cross-section, allowing finite spacing of the concentric layers. Furthermore, axial folding involving concave folds such as shown in figures 5(b) and 9 can be used to reduce the difficulty in circumferential folding.

A second, possibly more serious, practical difficulty is the presence of stationary and traveling cross folds (i. e. folds crossing ridges), as indicated in figure 6. Practical implementation may require specific provisions in the wall design allowing for finite membrane strains in the domains occupied by cross folds. Other possibilities may be provided by different folding patterns, such as those of the type shown in figure 12, which may eliminate traveling cross folds.

Further study should be directed toward isometric deformations that do not necessarily retain rotational symmetry. Also of interest will be the expansion of the general theory to shells which admit finite membrane strains. Such an expansion will be particularly useful for a study of local fold and cross fold areas.

Astro Research Corporation,
Santa Barbara, California, July 20, 1961.

REFERENCES

1. Vlasov, V. Z.: The Theory of Momentless Shells of Revolution. NASA TT F-6, 1960.

2. Struick, D. J.: Differential Geometry. Addison Wesley Press, Inc., 1950.

3. Blaschke, W.: Differential Geometrie. Julius Springer, 1930.

4. Coxeter, H. S. M.: Introduction to Geometry. John Wiley & Sons, Inc., 1961.

5. Jahnke, E., Emde, F.: Tables of Functions. Dover Publications, 1945.

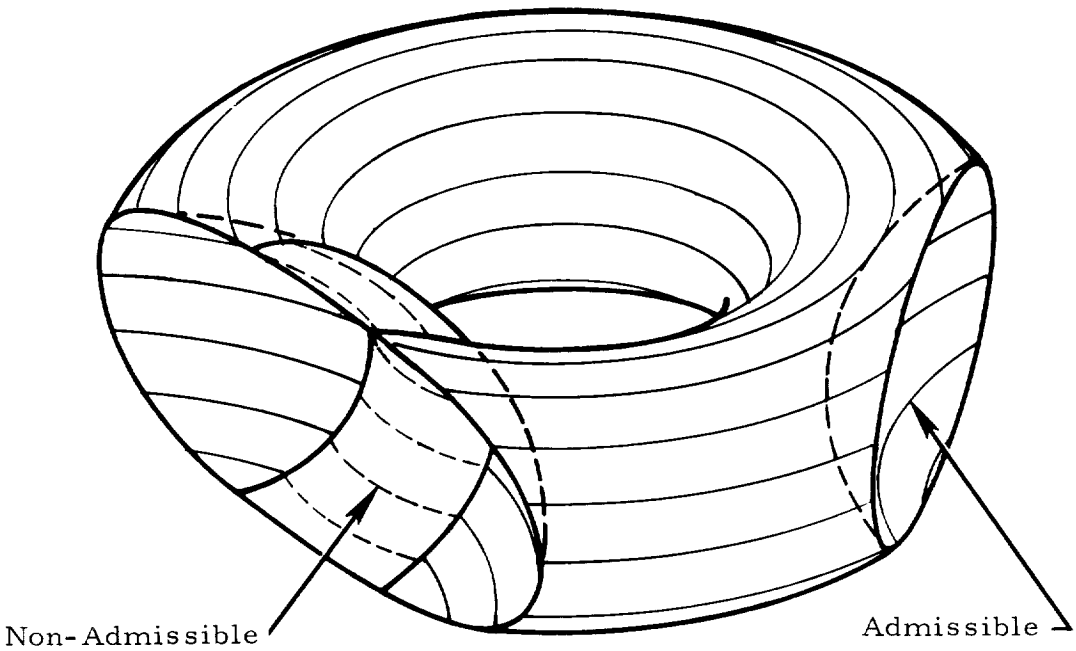

Figure 1.- Isometric Deformation of Torus Membrane by Reflection on Intersecting Planes.

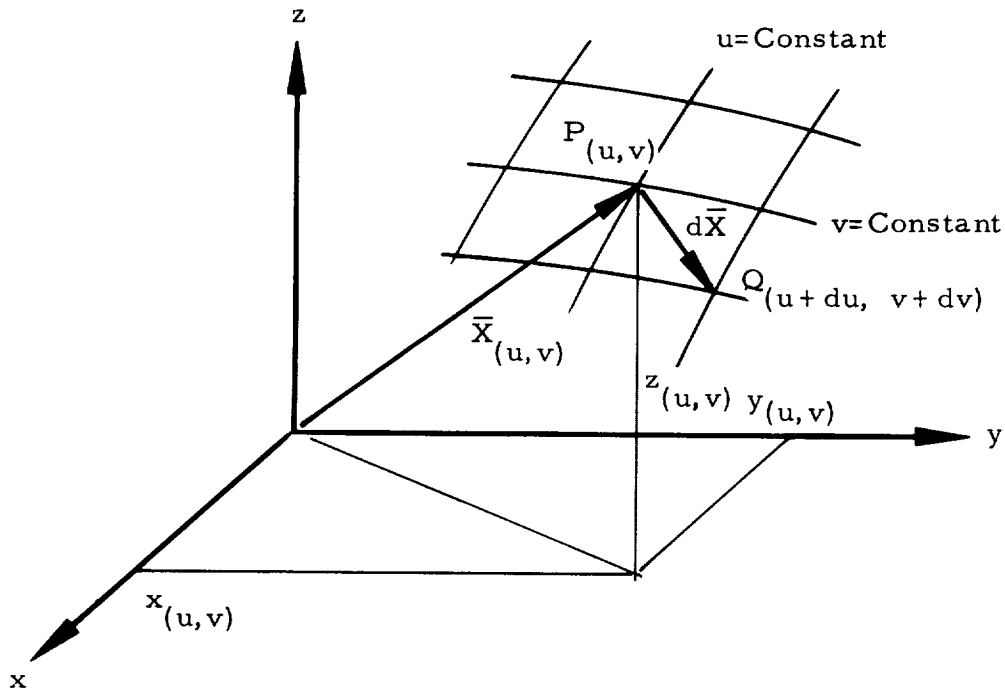

Figure 2. - Coordinate System for General Surface.

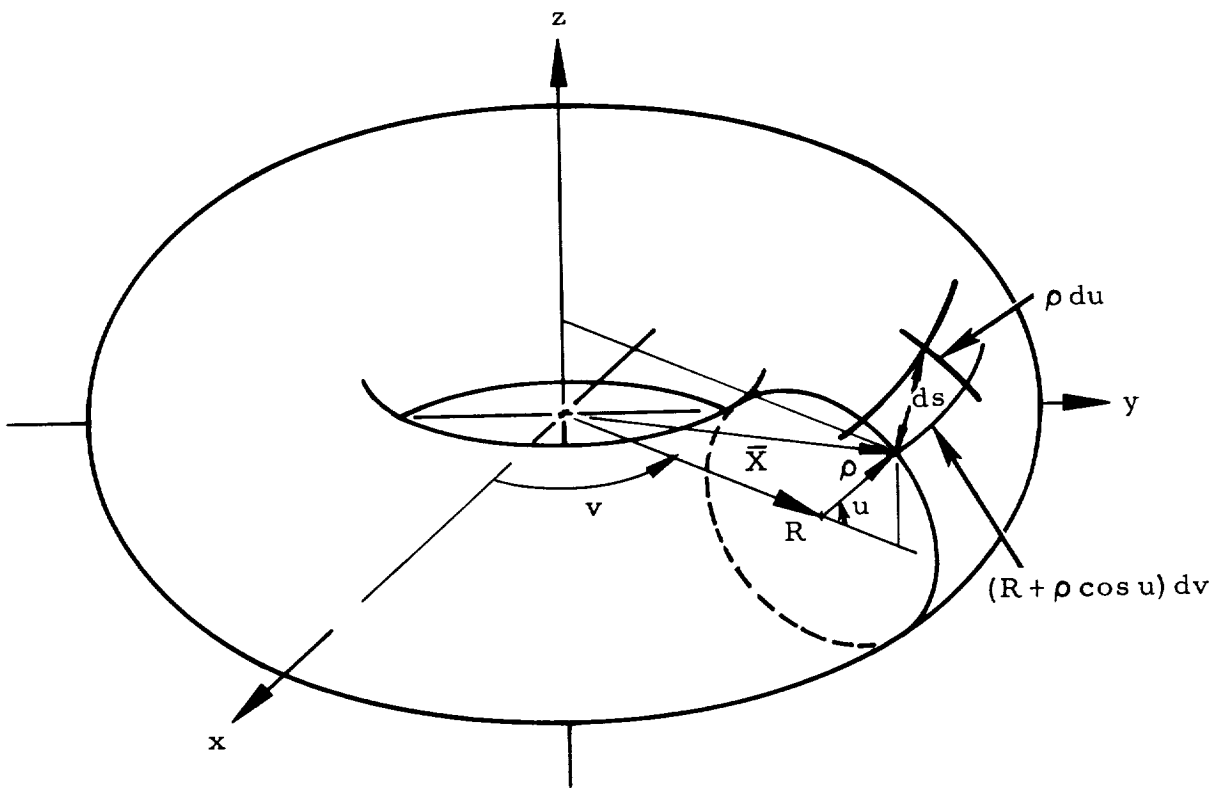

Figure 3. - Torus Coordinates.

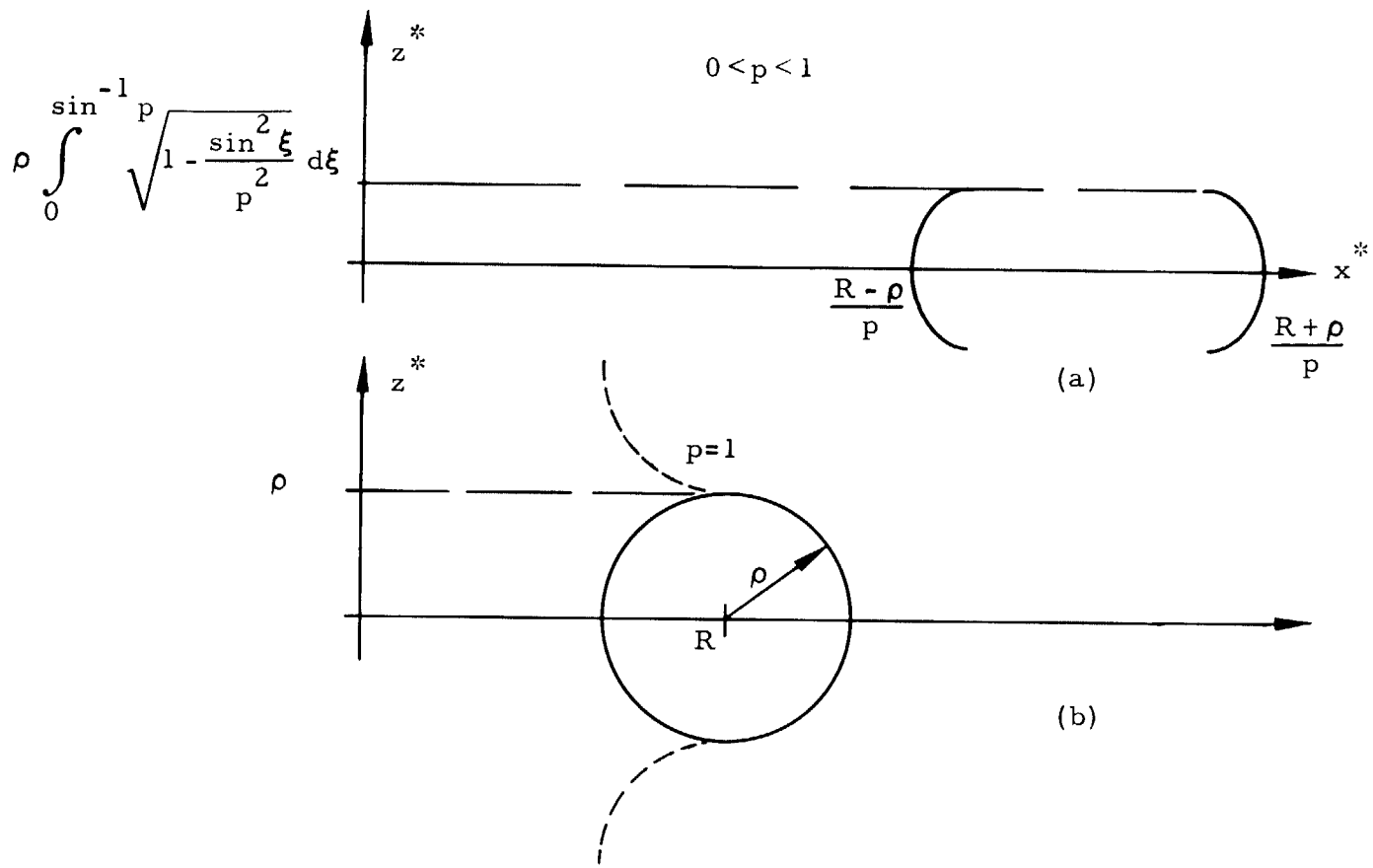

Figure 4. - Solutions for Isometric Torus Sections According to Equation (20).

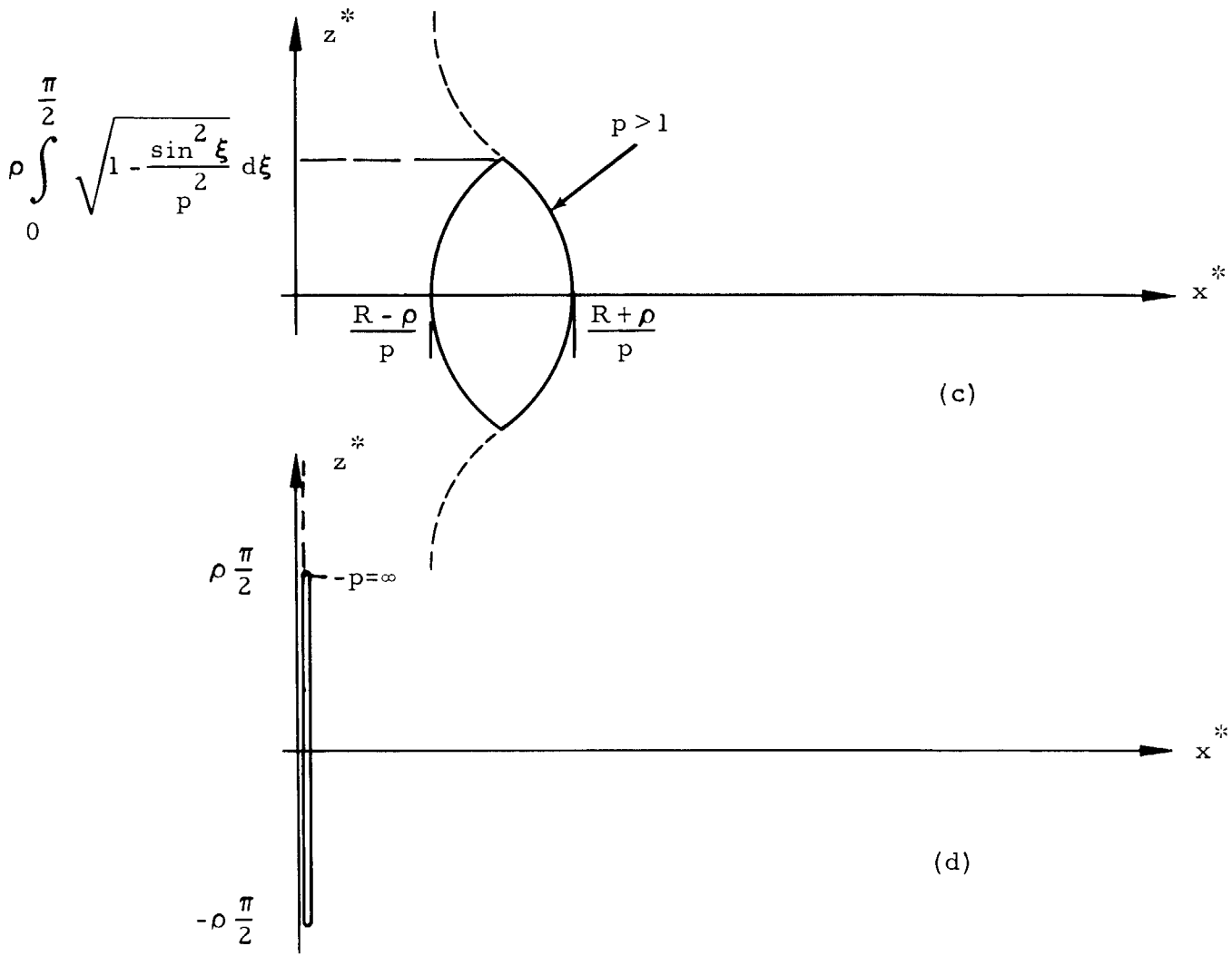

Figure 4. - Concluded.

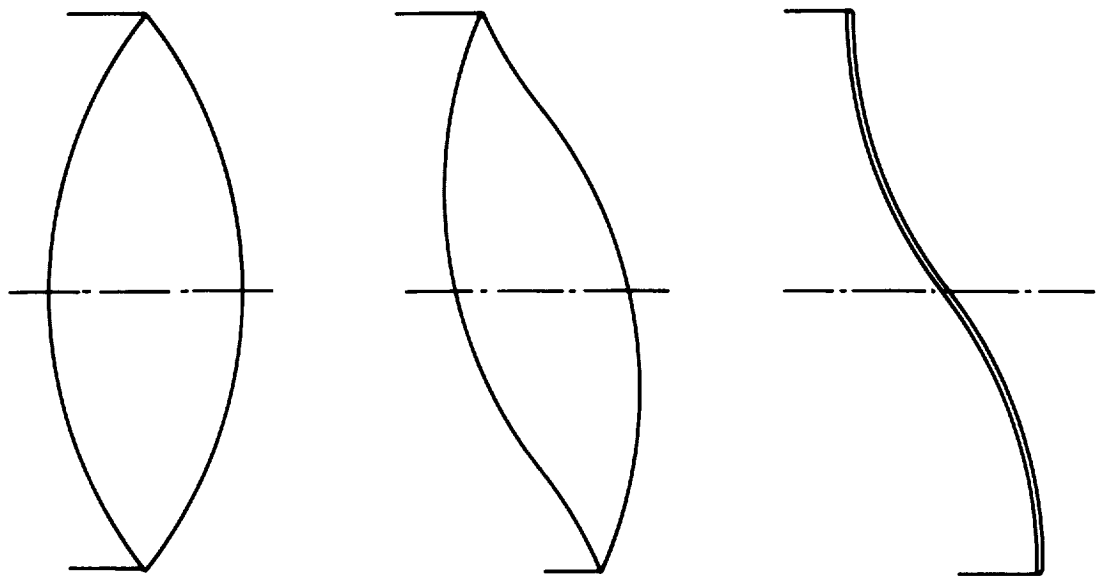

(a)

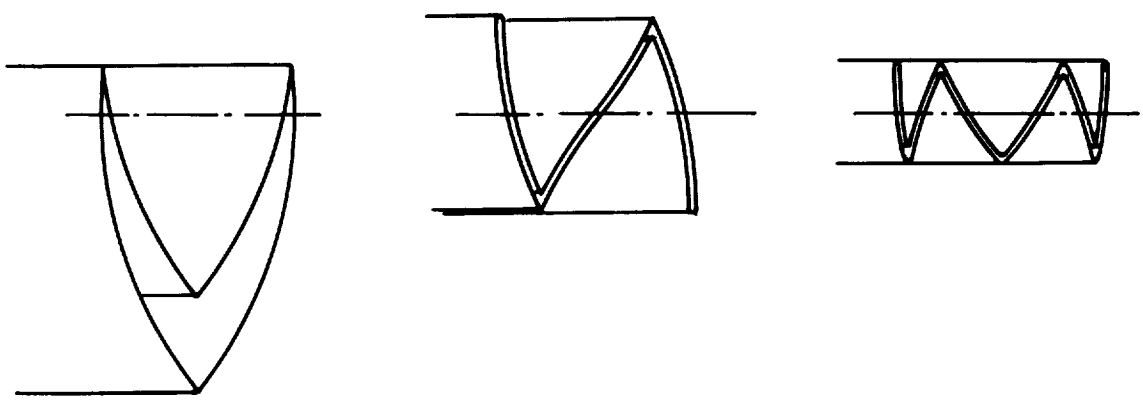

(b)

Figure 5. - Closed Isometric, Meridional Torus Cross-Sections Obtained by Reflection.

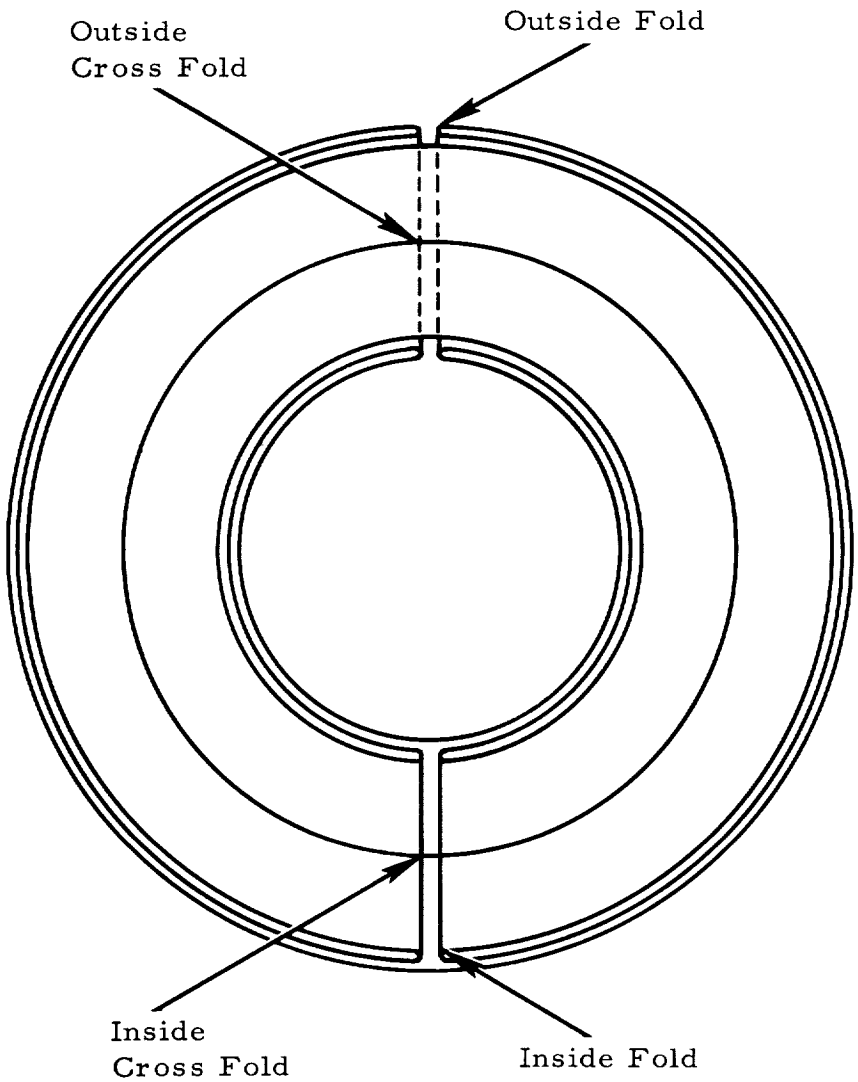

Figure 6. - Circumferential Folding Schematic of Torus for $n = 2$, $p = 3$.

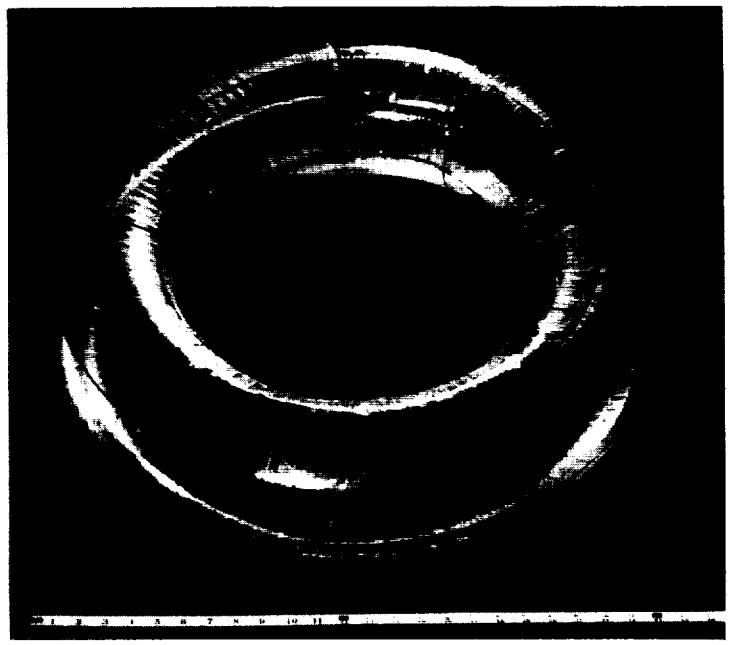

Figure 7. - Full Torus - Expanded.

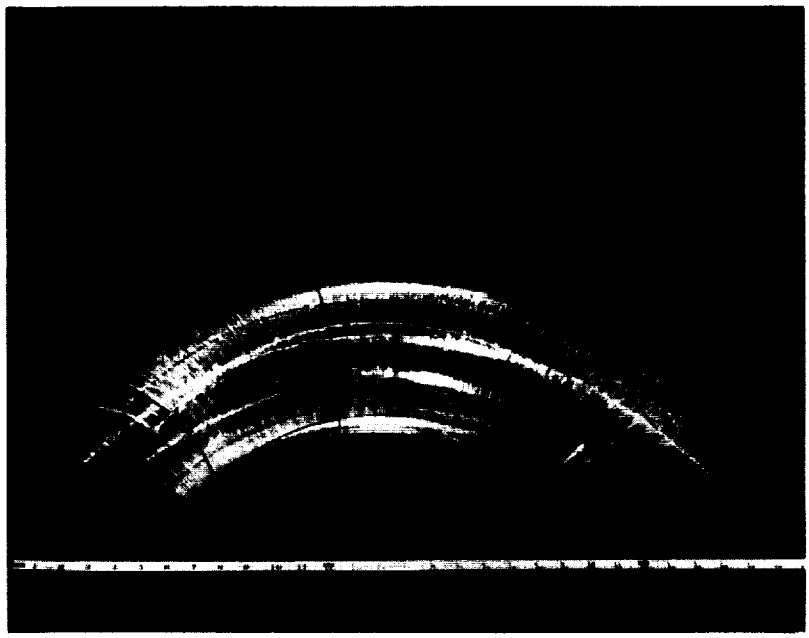

Figure 8. - Quarter Torus - Expanded.

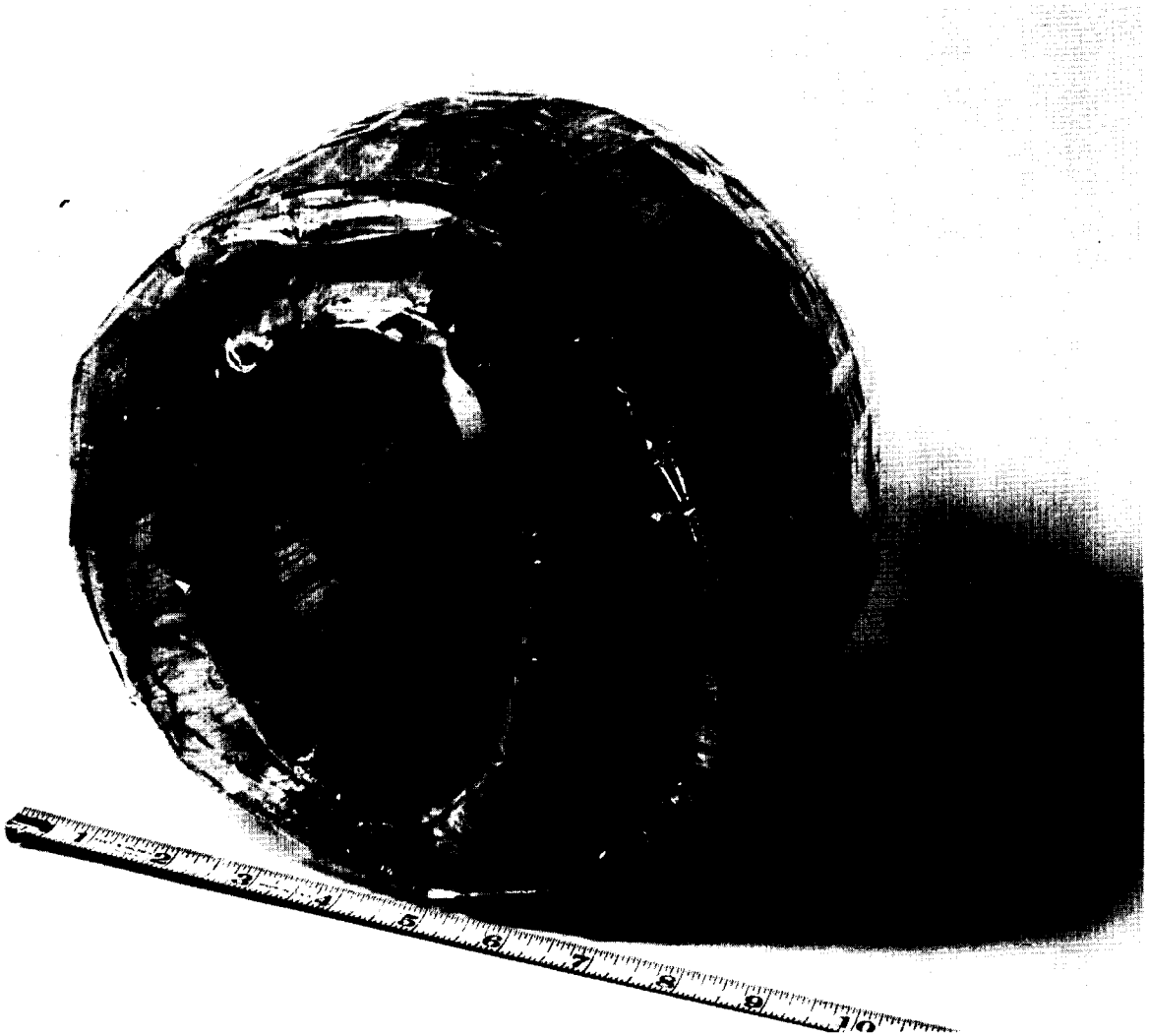

Figure 9.- Full Torus - Folded (p = 3 , n = 2).

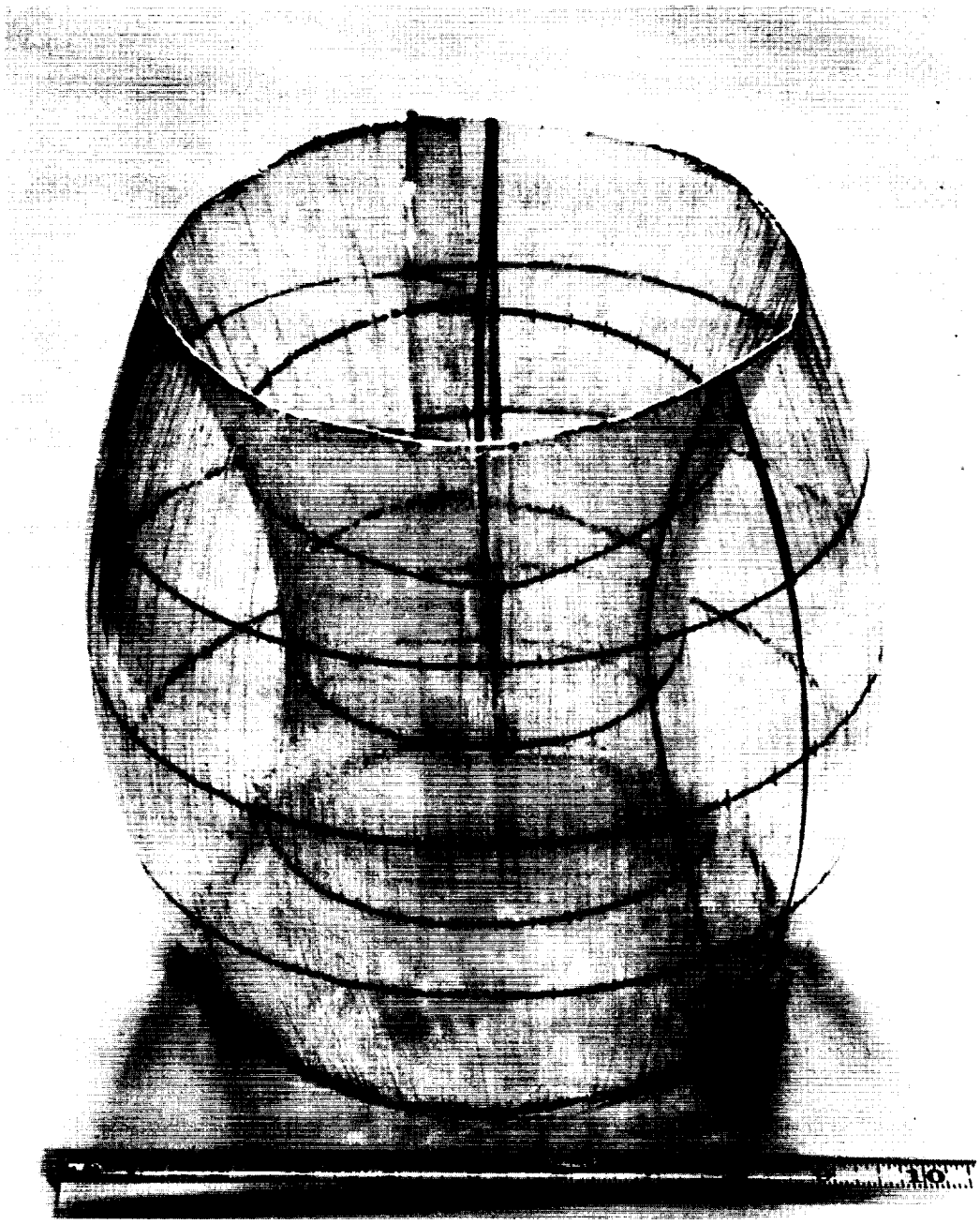

Figure 10.- Quarter Torus - Folded (p = 4).

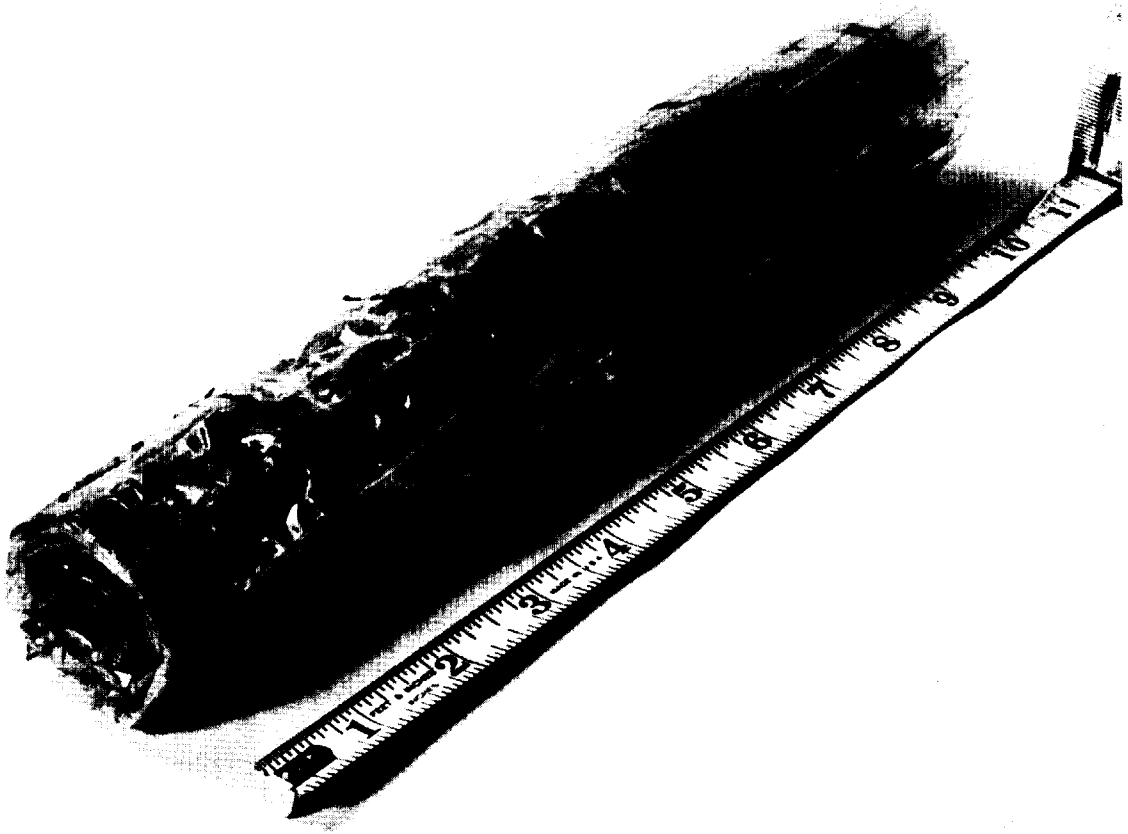

Figure 11.- Quarter Torus - Folded ($p \to \infty$).

Figure 12.- Full Torus - Folded (Epicycloid).

NASA-Langley, 1962 D-1690

RECEIVED
DEC 26 1962

NASA TN D-1690
National Aeronautics and Space Administration.
A CONTRIBUTION TO THE THEORY OF FOLDING DEFORMATIONS IN EXPANDABLE STRUCTURES WITH A PARTICULAR APPLICATION TO TOROIDAL SHELLS. H. U. Schuerch and G. M. Schindler, Astro Research Corporation. December 1962. 28p. OTS price, $0.75.
(NASA TECHNICAL NOTE D-1690)

Outlines for a theory of large deformations, including folding, of arbitrary inextensible membranes are presented. The approach to the problem utilizes isometric mapping techniques complemented by the additional topological constraints of the folding problem in real membrane structures. The theory is applied to an inextensible membrane in the form of a torus. Rigorous solutions are found for a particular class of deformations. Theoretical results are verified, qualitatively, by realization of predicted folding patterns on two torus models.

I. Schuerch, H. U.
II. Schindler, G. M.
III. NASA TN D-1690
IV. Astro Research Corp.

NASA

NASA TN D-1690
National Aeronautics and Space Administration.
A CONTRIBUTION TO THE THEORY OF FOLDING DEFORMATIONS IN EXPANDABLE STRUCTURES WITH A PARTICULAR APPLICATION TO TOROIDAL SHELLS. H. U. Schuerch and G. M. Schindler, Astro Research Corporation. December 1962. 28p. OTS price, $0.75.
(NASA TECHNICAL NOTE D-1690)

Outlines for a theory of large deformations, including folding, of arbitrary inextensible membranes are presented. The approach to the problem utilizes isometric mapping techniques complemented by the additional topological constraints of the folding problem in real membrane structures. The theory is applied to an inextensible membrane in the form of a torus. Rigorous solutions are found for a particular class of deformations. Theoretical results are verified, qualitatively, by realization of predicted folding patterns on two torus models.

I. Schuerch, H. U.
II. Schindler, G. M.
III. NASA TN D-1690
IV. Astro Research Corp.

NASA

NASA TN D-1690
National Aeronautics and Space Administration.
A CONTRIBUTION TO THE THEORY OF FOLDING DEFORMATIONS IN EXPANDABLE STRUCTURES WITH A PARTICULAR APPLICATION TO TOROIDAL SHELLS. H. U. Schuerch and G. M. Schindler, Astro Research Corporation. December 1962. 28p. OTS price, $0.75.
(NASA TECHNICAL NOTE D-1690)

Outlines for a theory of large deformations, including folding, of arbitrary inextensible membranes are presented. The approach to the problem utilizes isometric mapping techniques complemented by the additional topological constraints of the folding problem in real membrane structures. The theory is applied to an inextensible membrane in the form of a torus. Rigorous solutions are found for a particular class of deformations. Theoretical results are verified, qualitatively, by realization of predicted folding patterns on two torus models.

I. Schuerch, H. U.
II. Schindler, G. M.
III. NASA TN D-1690
IV. Astro Research Corp.

NASA

NASA TN D-1690
National Aeronautics and Space Administration.
A CONTRIBUTION TO THE THEORY OF FOLDING DEFORMATIONS IN EXPANDABLE STRUCTURES WITH A PARTICULAR APPLICATION TO TOROIDAL SHELLS. H. U. Schuerch and G. M. Schindler, Astro Research Corporation. December 1962. 28p. OTS price, $0.75.
(NASA TECHNICAL NOTE D-1690)

Outlines for a theory of large deformations, including folding, of arbitrary inextensible membranes are presented. The approach to the problem utilizes isometric mapping techniques complemented by the additional topological constraints of the folding problem in real membrane structures. The theory is applied to an inextensible membrane in the form of a torus. Rigorous solutions are found for a particular class of deformations. Theoretical results are verified, qualitatively, by realization of predicted folding patterns on two torus models.

I. Schuerch, H. U.
II. Schindler, G. M.
III. NASA TN D-1690
IV. Astro Research Corp.

NASA