3p

554097 58p

NASA TN D-1422

N63-12125
code 1

TECHNICAL NOTE

D-1422

THE NIMBUS SPACECRAFT AND ITS COMMUNICATION SYSTEM AS OF SEPTEMBER 1961

Rudolf A. Stampfl

Goddard Space Flight Center
Greenbelt, Maryland

NATIONAL AERONAUTICS AND SPACE ADMINISTRATION

WASHINGTON January 1963

THE NIMBUS SPACECRAFT AND ITS COMMUNICATION SYSTEM AS OF SEPTEMBER 1961

by
Rudolf A. Stampfl
Goddard Space Flight Center

SUMMARY

The major objective of the Nimbus project is to provide a capability for continuous satellite weather observation for application to weather analyses and forecasting. The spacecraft and associated ground systems have been designed to meet this objective and are now under construction. The basic measurements to be obtained include global television picture coverage of daytime cloud cover and measurements of infrared and reflected radiation, and the earth's heat balance. This paper describes the fundamental design criteria, and conditions governing this design. The characteristics of the Nimbus vehicle and its major systems are discussed in detail and their performance is defined. At the time that this paper is being published, in the fall of 1962, most of the subsystems are in the process of prototype testing or have already completed it. Integration and qualification testing of the prototype spacecraft as a whole is about to begin. The Nimbus satellites not only will be applied to weather analyses and forecasting but also will be used for research and development.

CONTENTS

Summary i

Frontispiece iv

INTRODUCTION 1

ORBIT 2

BASIC COMPONENTS OF THE SPACECRAFT 3

- Controls and Structure 3
- Power Supply 7
- Clock 10
- Telemetry 12

SENSORY SUBSYSTEMS 17

- Television 17
- High Resolution Infrared Radiometer 26
- TV and HRIR Subsystem Parameters 28
- Five Channel Infrared Scanner (Medium Resolution Infrared Radiometer) 29
- Antennas 32

THE GROUND SYSTEM 38

- Antenna and Receivers 38
- Command Console 40
- Telemetry Presentation 41
- MRIR Data Presentation 43
- Cloud Cover Presentation Equipment 44

CONCLUSION 47

ACKNOWLEDGMENTS 48

References 48

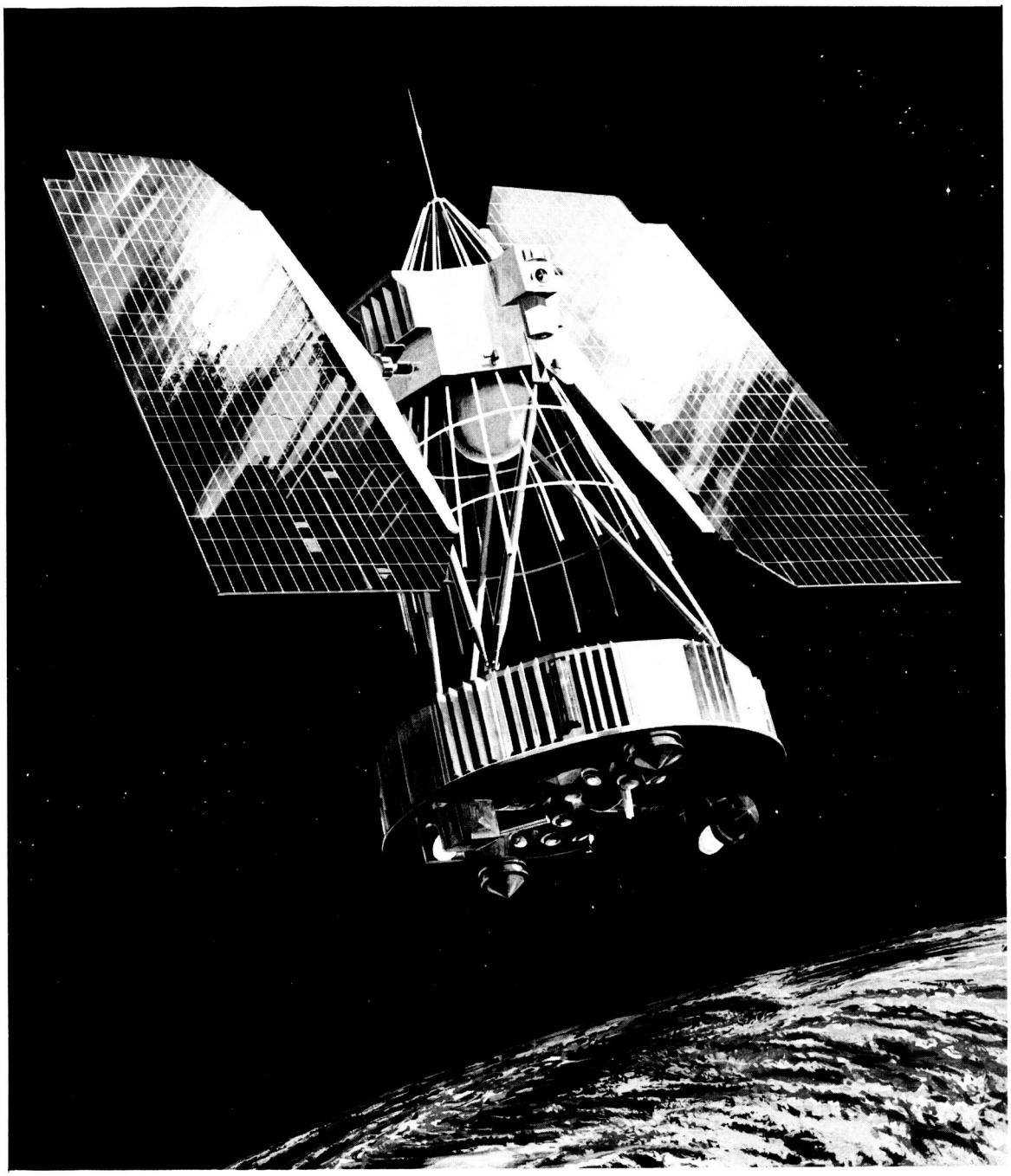

Nimbus - Artist's Conception

THE NIMBUS SPACECRAFT AND ITS COMMUNICATION SYSTEM AS OF SEPTEMBER 1961*

by
Rudolf A. Stampfl
Goddard Space Flight Center

INTRODUCTION

The Latin word "nimbus" means cloud or raincloud. Meteorologists have applied this term to any rain-carrying cloud, and the NASA has named its second-generation meteorological satellite project, Nimbus. The Nimbus spacecraft are a family of research and development satellites evolving from the TIROS experiments (References 1 and 2 and Figure 1). They will provide a means for performing numerous and diversified geophysical experiments. The Nimbus satellites, weighing approximately 650 pounds, differ from their immediate predecessor, TIROS, in that they will be earth-oriented and placed in a circular orbit. The orbit will be inclined approximately 80 degrees retrograde; its plane will precess at a rate equal to that at which the earth circles the sun and will always include the earth-sun line. The satellites will be stabilized within ±1 degree. This discussion can roughly be divided into three parts: (a) the basic component structure — operational controls, power supply, electronic clock, and telemetry — in relation to its service to the entire system; (b) the sensory subsystems and experiments, and the system design; (c) the available ground facilities and presentation of the data.

A three camera television system will be used to photograph global cover cover. When it is used in conjunction with a high resolution infrared scanner, complete coverage of the earth can be accomplished within 12 hours. A five channel medium resolution infrared scanner provides data concerning the emitted and reflected radiation of the earth's surface in five spectral bands. The end products of the Nimbus spacecraft system are cloud pictures presented by facsimile-type recorders, located at the ground stations, magnetic tapes for storage of picture signals, and signals derived from the medium resolution infrared scanner. Telemetry carrying data acquired at a slow rate and engineering-type data are stored on magnetic tape in digital format. Command, receiving, and telemetry quick-analysis equipment are the ground system counterparts to the basic spacecraft components. An 85-foot diameter parabolic antenna, located at the ground facility, points automatically or by program command.

*This paper was given as a lecture in the 1961 summer extension course on "Space Communications" at the University of California, Los Angeles, California. The spacecraft description pertains to the overall spacecraft system; initial Nimbus satellites will not employ redundant features and will not carry all the subsystems described. Further in the course of development, power and weight figures have changed.

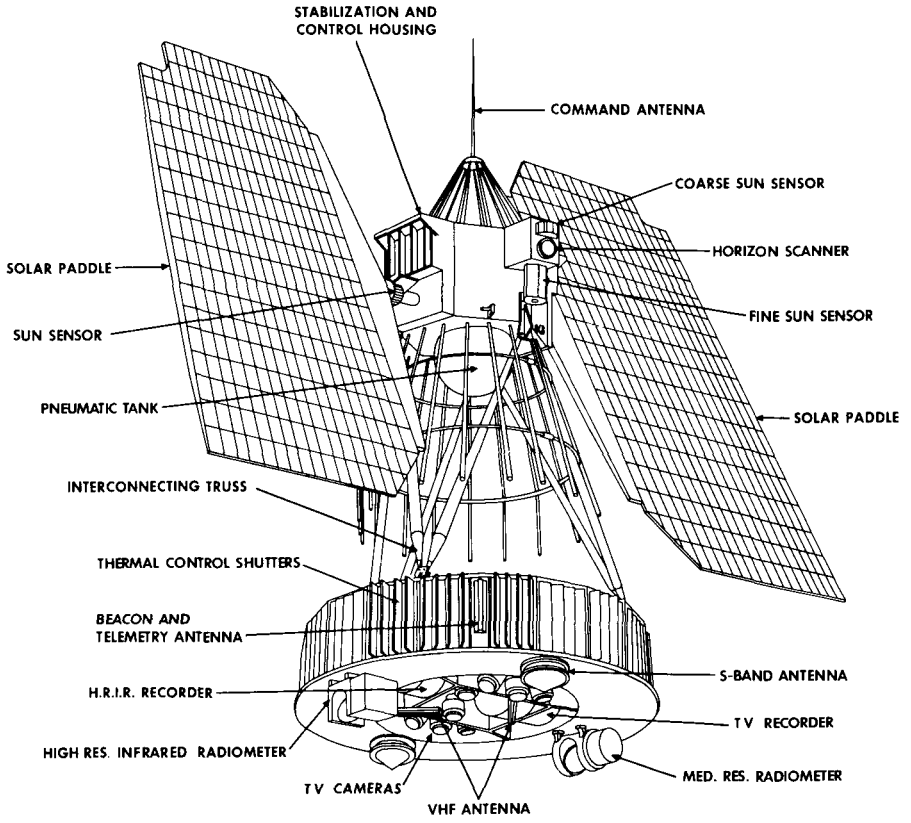

Figure 1—Nimbus spacecraft with the shell removed

The Nimbus spacecraft will acquire more data during one of its orbits than all the present U.S. ground-based meteorological networks can in the same period of time. Its measurements will be readily delivered to a high-latitude data acquisition station for transmission to GSFC and the U. S. Weather Bureau, which also receives the standard meteorological data.

The spacecraft system emphasizes flexibility and interchangeability of subsystems to permit the application of new experiments. Besides the cloud measurements, which are only qualitative, the project will uncover little information about the kinetics and dynamics of the atmosphere. But other parameters, such as the heat budget of the earth and reflected radiation, can also be measured. It is believed that the enormous quantity of experimental results will stimulate research in those fields and enhance useful cooperation among the groups handling meteorological data.

ORBIT

A polar circular orbit is ideally suited, for a stabilized platform, for acquisition of television and other optical data, since the earth's rotation then provides the means for

complete earth coverage. Furthermore, system demands on the spacecraft power supply are considerably simplified when the attitude of the solar power supply, with respect to the sun, is maintained constant. This feature can be achieved when the orbital plane always contains the earth-sun line (Reference 3).

Since the earth's equatorial diameter is 43 km larger than its polar diameter, its gravity potential field is non-spherical and a satellite's angular momentum vector (normal to the orbital plane) precesses around the earth's axis. This precession is normally referred to as the rate of nodal regression of a satellite. A satellite launched into a circular orbit of an altitude of 1000 km, towards the southwest quadrant, at an inclination of 80.11° to the equator, regresses 0.98 degree per day, exactly the regression of the mean sun relative movement around the earth (in terms of celestial coordinates). Such an orbit will have the formerly stated feature of being nearly polar. Other considerations necessary for obtaining optimum data from the television system indicate the desirability of an orbital altitude of approximately 1000 km. An error analysis for the system, based on the launch vehicle performance margin, indicates that a 1 degree error in inclination will cause an 18 degree deviation from the mean sun position after a half-year of orbital life, with an altitude error of 70 km corresponding to 6 degrees deviation for the same period of time. Table 1 summarizes the orbital characteristics planned for the Nimbus satellites.

Table 1
Nimbus' Planned Orbital Characteristics

Altitude	1000 km
Inclination	80.1 degrees
Period	107 min.
Rate of nodal regression	0.98 degree/day

BASIC COMPONENTS OF THE SPACECRAFT

Controls and Structure

A stabilized platform which views the earth continuously from one specific area, in this case the base plate, must be controlled in all three of its axes. Two horizon sensors and a rate gyro will generate error signals to be used as computer inputs to control gas jets and inertia wheels. Initial stabilization is accomplished by means of a sun sensor. Gas jets are mounted so that control within ±3 degrees to the local vertical direction is possible in the three axes. A sufficient gas supply will be carried to sustain operation for 6 months. The inertia wheels, in conjunction with the gas systems, will stabilize the spacecraft to ±1 degree. The flywheels will function primarily to control periodic disturbances; the gas system will unbias the inertia wheels when maximum speed is reached and when steady disturbances occur. Angular rates of movement will be controlled to ±0.05

degrees/sec in all three axes, a value which enters directly as a design parameter into all the Nimbus optical scanning systems. The feature of a retrograde orbit results in considerable simplification in the drive system for the solar energy collectors. The present state of the Nimbus design requires that solar energy and photovoltaic energy converters be used. These solar cells will have a constant power input when the sun is viewed and the sun angle is maintained at 90 degrees to their surface. Because of the orbit selected, the sun's rays will always be nearly parallel to or in the orbital plane of the satellite during its projected lifetime. So the rotational motion of the satellite - once per orbit - generated by the satellite's control system must be counteracted only for the solar paddles.

A brief description of the Nimbus spacecraft configuration will be helpful in the discussion which follows (Figures 2 and 3).* Stabilization is enhanced by the earth gravity potential field when a satellite is designed in the shape of a dumbbell. This effect will aid the Nimbus control system because of the ratio of moments of inertia to the body. Of course, the stability of the system is not dependent on this effect but it provides an additional margin of safety. Other conceptual design considerations of the spacecraft are related to the degree of flexibility required for future missions. This guiding principle is evidenced throughout the entire spacecraft, particularly in regard to the control, power supply, routine telemetry, and antenna systems. In agreement with these considerations the control and sensory systems are physically separated (Figure 2).

The control system, with its error detectors, is housed in a hexagonally shaped container from which the solar paddle drive shafts protrude. With the exception of the wire connections, including the primary power connection, the system is independent from the spacecraft in all respects including its thermal design. The single interrogation antenna, mounted on top of the control system container, receives commands from the ground for the entire spacecraft. Slip rings are on the paddle shaft to feed power to the batteries, sun sensor voltage to the controls computer, and signals to the paddle. The resulting mechanical and electrical interface between the paddles and the control system is extremely simple. The hexagonally shaped control system container measures 22 inches across one side, is 18 inches high, and weighs 112 pounds. Truss members, 48 inches long, connect the control system to a lower torroidal section, a sensory ring, which houses the sensors and their associated equipment. The sensory ring is divided into 18 compartments, each 6 x 8 x 13 inches. All equipment is designed to fit into these standard volumes, or into subdivisions, by quarters, of the 8-inch dimension (or by division of 13 inches by two). Eight divisions provide sufficient flexibility for modular design of electronic and most mechanical components. Optical equipment, such as scanners, cameras, passive detectors, or other bulky equipment, including tape recorders, are located in the cylindrical section within the torus or underneath the torus. The entire base area can be used for instrumentation. The engineering advantages of this design are as follows: (1) all instrumentation can easily be replaced; (2) subsystems can be changed between flights; (3) the control system can be

*Not all of the above components will be included on the initial flights.

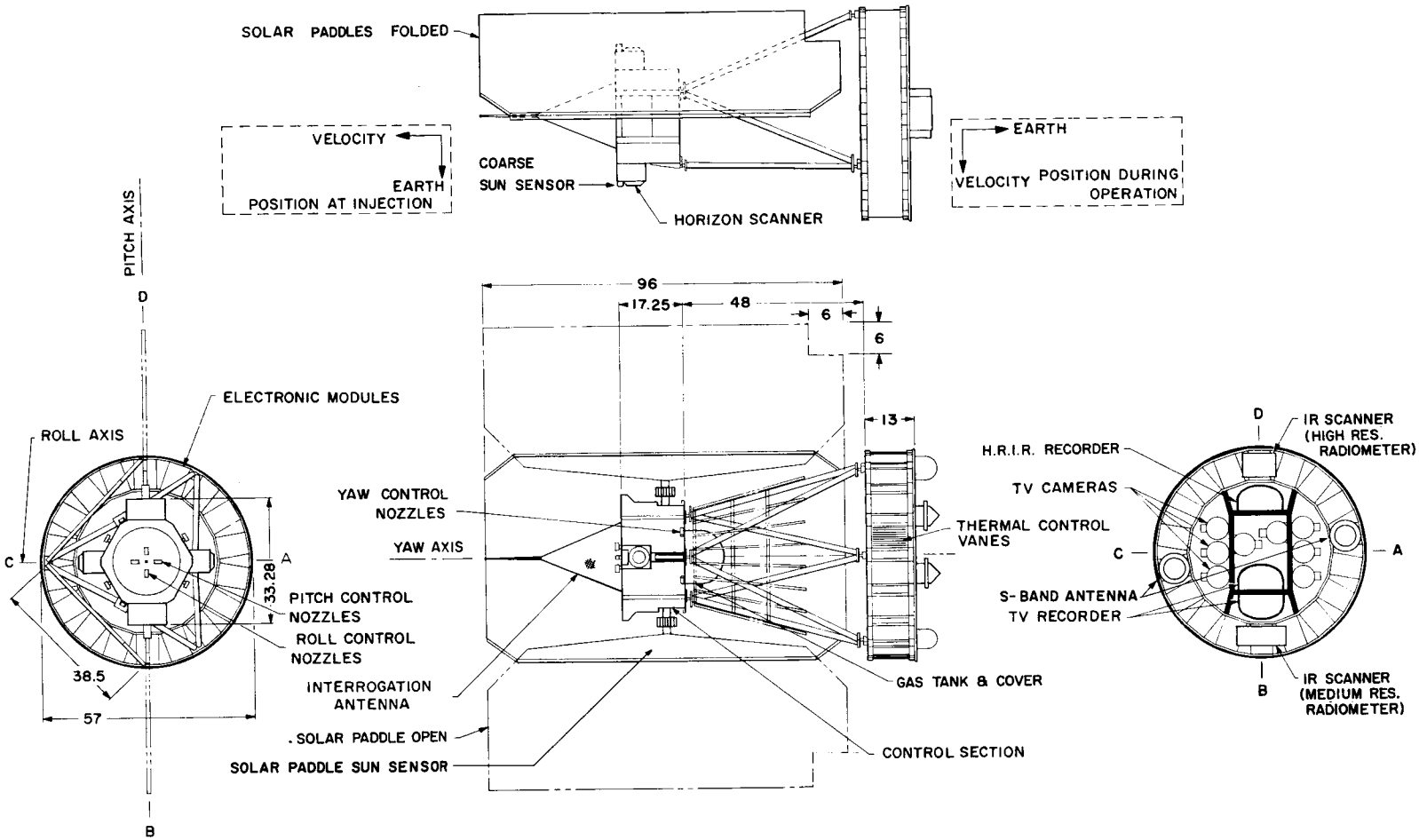

Figure 2—Arrangement of the Nimbus spacecraft components (measurements are in inches)

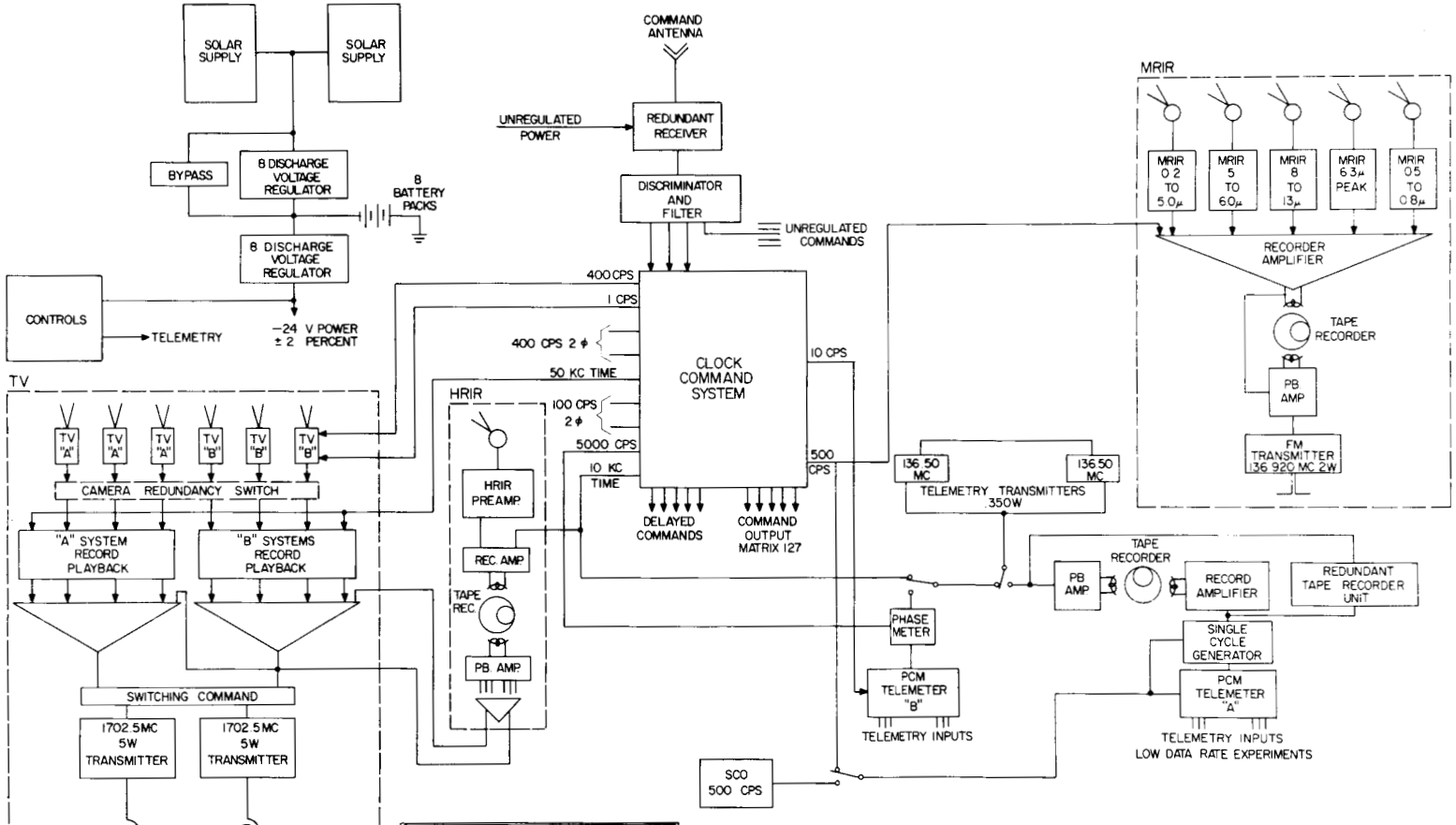

SUBSYSTEM	WEIGHT	POWER
CONTROLS	112 LB	78W
POWER	150 LB	—
PCM & BEACON	61 LB	6W
CLOCK & COMMAND	314 LB	11W
CLOUD COVER	170 LB	70W
MRIR	28 LB	9.5W

Figure 3—Nimbus schematic

developed almost independently of the spacecraft; (4) the power supply can be replaced with one of higher power and even a nuclear power supply may be used; and (5) the choice of experiments is almost unlimited. Torus and truss weight is approximately 60 pounds, achieved by using magnesium where possible. The independence of control and sensory parts is further enhanced by making the thermal properties of these two sections as independent as possible; the thermal power flow through the truss is less than 2 watts and radiation exchange between the two bodies is limited by the fact that they operate at approximately the same temperatures. Both sections contain active temperature control devices designed to operate like venetian blinds. These serve as energy valves, permitting heat to radiate towards the cold sky when they are open and conserving heat when they are closed. Error detectors are located on the sensory ring of the 18 compartments, mechanically actuating the blinds so that an opening is assured at a nominal temperature of 25°C.

Testing of the spacecraft and calibration of the sensors are tasks of considerable magnitude and will not be discussed in this presentation; however, many design features have been influenced by the testing requirement. Flight spacecraft will be tested at 7 g rms with noise extending from 20 to 2000 cps. The spacecraft will spend approximately 60 days in a thermal vacuum test, half of the time at 45°C and half at 5°C. This represents a margin of 10°C beyond the maximum possible error of the thermostat. Calibration is performed by mounting appropriate calibration equipment with test patterns or other targets in an adapter section connecting the spacecraft with the rocket carrier. This procedure is more accurately termed a "check of calibration," since primary calibration is performed prior to installation of the system in the spacecraft. It must be performed in vacuo, as will be apparent later. The spacecraft will be in a space simulator for approximately 60 days.

Power Supply

The power supply is a solar-conversion type, designed as a separate unit but closely associated with the design of both the structure and control components. Solar power has been chosen for best weight economy, and because it has sufficient reliability and, of course, longevity to be used for extended periods of time in a space environment.

When the Nimbus spacecraft is orbiting at 1000 km in a circular orbit, it will spend 69 minutes in sunlight and 38 minutes in the earth's shadow. Therefore, 41,040 cm^2 of silicon cell surface area will be available to intercept a maximum solar energy equivalent to 5700 watts, during the period of sunlight (Figure 2). However, the actual average energy that will be available during the entire orbit is subject to the variation of several parameters, which must be taken into account. Silicon cells will be selected which have an efficiency better than 10.5 percent (air mass zero) for a large production yield even for 2×2 cm cells. However, if a more detailed analysis is desired, the efficiency degradation which is due to increasing surface temperatures, various types of filters used to reject certain radiation heating effects, and space environment erosion, must be taken into account.

The various subsystems require a multiplicity of voltages with many conflicting voltage-stability demands. The only practical solution to these problems is the employment of dc to dc converters with auxiliary regulation. Input voltage for these circuits is determined by the maximum breakdown voltage of the transistors and a desire to operate as close to it as possible for optimum conversion efficiency. These reasons, and the experience gained from the use of a multiplicity of other spacecraft power values in the TIROS series, led to the choice of -24.5 volts and a regulation of ±2 percent.

The number of silicon cells required to gather energy lends itself uniquely to redundant designs of series and parallel connections of the cells, and an arrangement of blocking diodes so that solar cell strings producing low voltages do not load those producing higher voltages. By considering cell efficiency, losses incurred because of the interaction of cells, and losses inherent in the diodes, and allowing further for the spectral response of the cells at the orbital altitude, it is found that 440 watts will be obtained from the cells when the paddles are illuminated at their mean temperature of 30°C. As a Nimbus satellite leaves the earth's shadow available power will be greater, but continuous heating in sunlight will decrease the power output. To maintain a favorable mean temperature, cells are coated with a filter material to provide the appropriate absorptivity-to-emissivity ratio to receive light in the spectral region where the cells are sensitive and reject infrared radiation components of the spectrum. A glass cover provides protection against meteoric erosion and serves as a base for the filter coating. The total weight of each solar paddle is 23 pounds.

The output voltage from the silicon cells will not be constant; thus charging of the storage batteries must be regulated (Figure 4). Sealed nickel-cadmium cells will provide the energy storage capability for the spacecraft. Advantages of these cells are a good energy to weight ratio, a convenient temperature operating range, and a high cycling capability. Nevertheless, the batteries are of lower reliability than the solar cells and redundancy must be provided. The power supply designed can choose depth of discharge, extra capacity, by adding more battery strings, and separation of battery strings, by appropriate circuitry. For Nimbus, 4.5 ampere-hour cells have been chosen and 15 percent of their full ampere-hour capacity will be discharged. Eight separate and independent battery packs will be provided; the total load will be satisfied by 75 percent of the capacity, or 6 batteries. Charging of the nickel-cadmium batteries depends on the state of battery discharge and also on the temperature and gas pressure within the cell. High temperature and high pressure destroy the cells. Any charge in addition to the normal charging rate of the batteries increases the temperature and pressure. Sensors at each battery string operate a switch to reduce the regulator output to a smaller charge rate sufficient to maintain the normal state of charge, thus preventing temperature buildups or significant gas generation. The regulators themselves, conventional current-series regulators of the dc amplifier type, limit the current at the beginning of the charge period to 1.5 amperes. The smaller charge rate is maintained at 0.5 ampere.

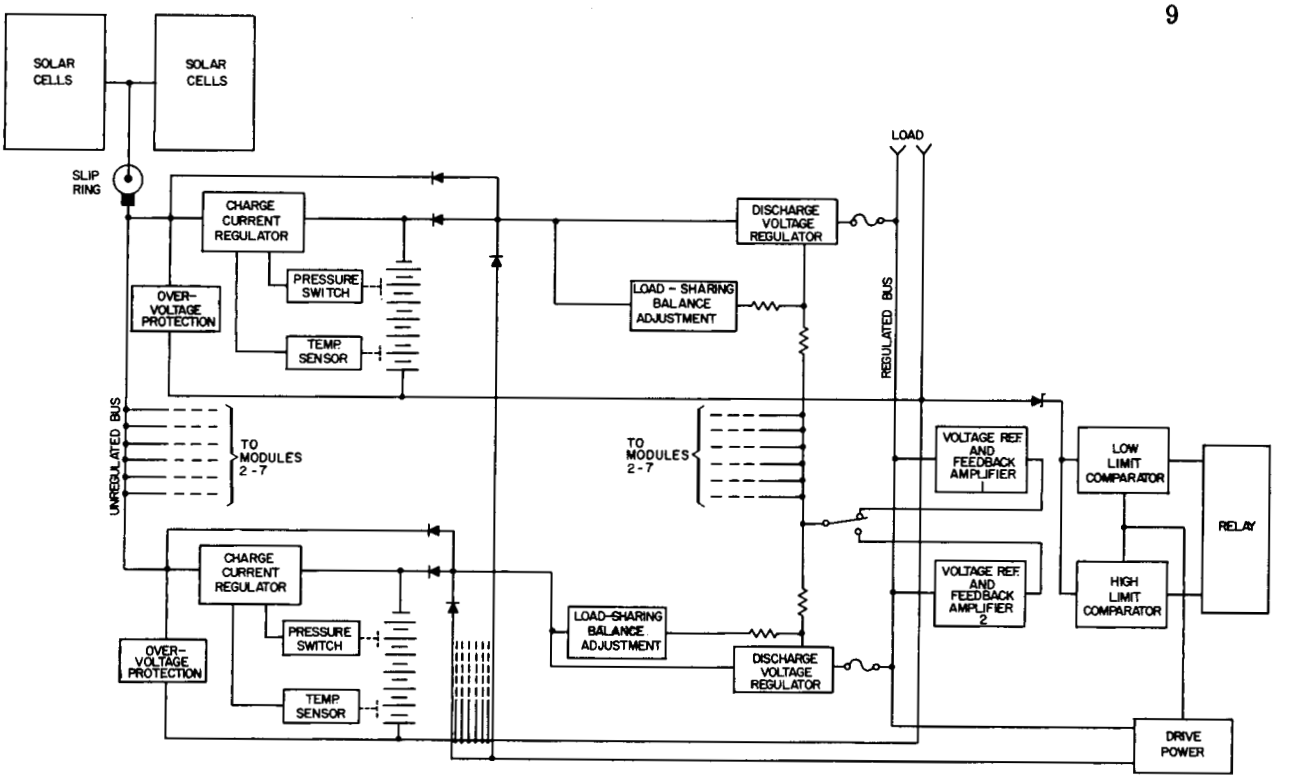

Figure 4—Nimbus power supply schematic

When the batteries are in the low charge state because of excessive temperature or excessive pressure or both, no power can be supplied to the load through the discharge regulator. In order to overcome this condition, a diode can be supplied to bypass the regulator; an overvoltage protection of the unregulated power bus guarantees that a safe limit for the discharge regulator is not exceeded. This arrangement also provides power to the load under sun illumination if all batteries have failed. Each of the eight units has a series discharge voltage regulator. A voltage reference and feedback amplifier which is common to all regulators senses the output voltage and provides a feedback signal to the discharge voltage regulator. At the same time this regulator is driven by a load-sharing balance adjustment so that batteries in a higher state of charge share more of the load than batteries in a lower state of charge. A redundant voltage reference and feedback amplifier unit guards against malfunction. Two voltage comparators sample the low and high voltage limits and compare them with the regulated bus voltage. If one of the limits is exceeded, a relay switches the redundant feedback reference amplifier into the loop. Separate fuses disconnect modules from the output when energy would be fed into them.

This power supply can provide a load of over 200 watts for an entire orbit. The actual instrumentation and subsystems daytime demand is 206 watts, except for the interrogation period when it is 400 watts; during the night it is 170 watts, except for the interrogation period when it is 342 watts.

The paddles are folded against the truss and torus to permit installation of the RF transparent shroud over the spacecraft (Figure 2). After shroud ejection and spacecraft separation the solar paddles are driven open by a motor until they finally latch in position and assume their function. After an appropriate time delay the control system is activated.

Clock

It is obvious that meteorological information must be related to geography to be of any use. Orbital determination and absolute time are therefore very important. Quartz crystals now being produced for crystal-stabilized oscillators will have an accuracy of 10^{-7} at frequencies around 1 Mc in a thermostabilized environment. If set at launch, 6 months later the clock will be 1.6 seconds in error. Resetting the clock is desirable since it improves accuracy and needs to be done only infrequently. An 800-kc aged crystal has been chosen. It is sealed in a glass container heated by a coil and maintained at 60°C. The frequency is then divided by a chain of multivibrators to 400 kc, 50 kc, 10 kc, 500 cps, 400 cps, and 100 cps (Figure 5).

Both the 50 and 10 kc sinusoids are amplitude-modulated with the standard NASA time code. This code has a frame rate of one per second and uses four-bit binary-coded decimal for seconds, tens of seconds, minutes, tens of minutes, hours, tens of hours, days, tens of days, and hundreds of days. "Zeros" correspond to 2-millisecond pulses; "ones" to 6-millisecond pulses. Zeros are interlaced so that an average pulse rate of 100 pulses/sec results. The code is generated by a small computer which uses a magnetostrictive delay line as the temporary storage element for 156 bits. External drive is provided at an 800 kc rate, and one computation is performed in 200 μsec. Four flip-flops in the loop are used for the four-bit binary-coded decimal code generation. Additional logic determines when 10 tenths of seconds and 10 hundredths of seconds have been reached and it drives two flip-flops to generate a 10 and 1 cps square wave signal. Appropriate circuitry converts zero and ones as they occur in the time code to 2-millisecond and 6-millisecond pulses, respectively, as demanded by the code. The timing code then modulates the two coherent carriers, 50 and 10 kc (Figure 5). The 10 kc frequency is radiated continuously through the tracking beacon. Required tracking accuracy is compatible with the Minitrack system (Reference 4). The Nimbus system will therefore use a 136.5 Mc beacon in the satellite and an interferometer arrangement in the ground network. Modulation on the beacon does not interfere with the tracing network as long as no sidebands lower than 1000 cps are adjacent to the carrier and sufficient carrier power is provided under all modulation conditions. For the former reason subcarriers such as the 10 kc timing oscillator are used with the beacon.

The availability of a time code computer in the clock permits the use of certain logic components for the secure command system which cannot be described here. Two receivers,

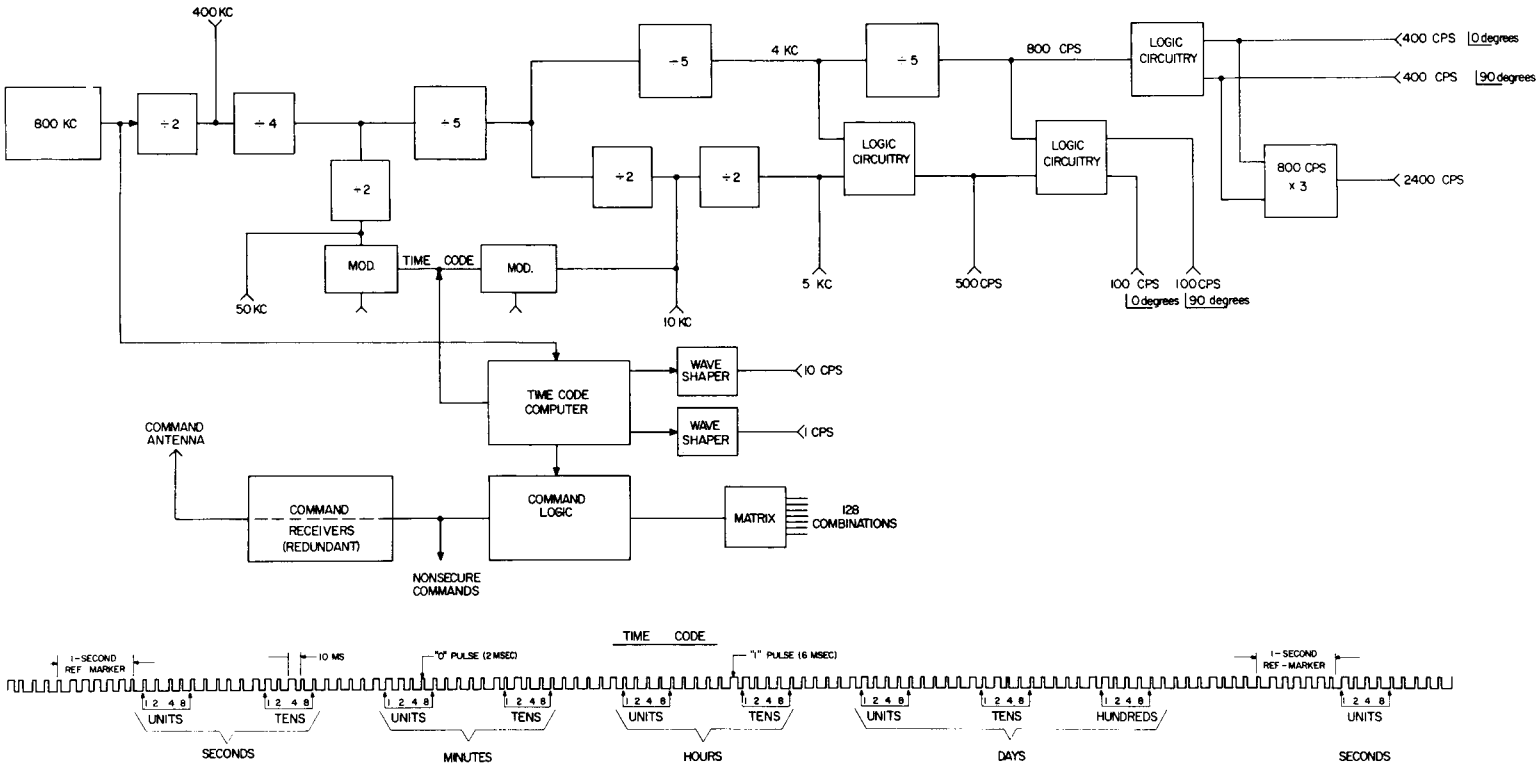

Figure 5—Nimbus clock

connected in parallel with fail-safe isolation circuitry to implement redundancy, receive binary-coded signals and feed the command logic. The timing is arranged so that approximately 30 commands will be given on an average pass; a total of 128 different commands can be transmitted. In case of clock failure, unsecure commands provide a minimum capability for purposes of analysis.

Telemetry

Pulse Code Modulation

The complexity of the spacecraft should be well appreciated, making a justification for analytical telemetry superfluous. Engineering evaluation of the system in orbit will provide a basis for more reliable designs in the future. This evaluation will also permit the life of the spacecraft to be prolonged since malfunctioning subsystems can be turned off through the command system or can be replaced by redundant modules. Both the electronic clock and a pulse code modulation (PCM) analytical telemeter, to be described, use the beacon as their transmitter. The telemetry installed aboard the spacecraft is designed to provide information on spacecraft performance, as well as sensor information. Accuracies of test point data to be telemetered will range from better than 1 percent to the determination of the mere presence of a signal.

Further considerations that should be taken into account are the current state of telemetry development and its likelihood of improvement, the possibility of increased or changed demands in the future, the overall complexity and reliability, and the ease of ground data readout and handling. Consideration of such problems resulted in the standardization in the use of PCM for all major spacecraft systems at Goddard Space Flight Center. The present state of the art does not seem to permit accuracies better than what a seven-bit code entails within the severe environment involved and the 6 month (approximately) longevity of the Nimbus spacecraft. Many data points that are sampled or sensed are valuable only if their reported time or the spacecraft's location are known. Naturally the data transmission rate varies greatly, and furthermore some test points must be analyzed continuously, whereas one transmission per orbit is adequate for others. These considerations led to the conclusion that a tape recorder must be employed which simultaneously with recording also determines at least one boundary for a maximum data rate. Conversely, a maximum data rate can be established by recalling that the fastest stability acquisition rate is 0.05 degree/sec for spacecraft control systems. A sampling rate of one data point per second seems to be adequate for the Nimbus system.

"A" System

Two independent PCM telemeters are provided, one to be recorded continuously on an endless loop recorder and the other to be commanded at any time. In the recorded

telemeter, which shall be referred to as the "A" telemeter, a frame consists of 64 words and each word of seven bits plus a word sync bit. The sync word is all ones and the word sync bit is a zero. Word numbers 33 to 48 are subcommutated into 16 columns, so that 256 channels are available at a data rate of one/16 sec. The remaining 16 channels of the first row are subcommutated into 16 columns, also available at a sampling rate of one in 16 seconds; however, the arrangement was made so that further subcommutation is possible. By adding an additional 256 gates, and making a small change in the timer, the number of subcommutated channels can be doubled and the sampling rate divided in half.

Subcommutation identification is made by the second word, which indicates the column number. By excluding the 256-channel gates, the "A" system is limited to 542 channels. It follows that a 500-pulse-per-second bit rate is required; this is supplied by the master clock. If the clock fails, a tuning fork oscillator replaces it by unencoded ground command. A coherent 500 cps subcarrier is modulated by the coder output and recorded on an endless loop recorder. The 240 foot tape passes the single record-playback head at 0.4 in./sec.

Playback of the "A" telemeter is performed separately by command. Power is applied to the playback motor which drives the tape through an appropriate drive mechanism at 12 ips, thirty times faster than the record speed. The 500 cps subcarrier signal is now converted to 15 kc, covering a spectral bandwidth from very low frequency components up to 30 kc. Any one of the three signals – time, telemeter "A", or telemeter "B" (to be explained below) – modulates the 350 milliwatt beacon-transmitter to 80 percent of its amplitude.

Since the weakest links in the "A" subsystem are the tape recorders and beacons, by ground command the redundant units will replace units that have failed so that evaluation of the failure is possible for as long as required. Automatic circuitry is prone to failure and is avoided for this reason.

Large PCM systems like large computers, although complex, contain simple logic (Figure 6). For the Nimbus system a 500 pps bit-rate signal is provided by the master clock and converted to word rate in a shift register. There are six additional 16-bit shift registers; four are driven in sequence and the remaining two form a matrix with two registers driven in parallel. Timing logic provides a pulse for the first position of the first shift register; the second pulse, corresponding to the second word, triggers the first position of the second shift register; the third and fourth words are fed to the first position of the third and fourth shift registers. The fifth word opens the second position of the first shift register. The two pairs of shift registers form a 256-position matrix and are timed in the conventional fashion. Each position of the registers and the matrixes opens a gate corresponding to a particular channel. There are 542 inputs through 542 gates available as mentioned previously. Parallel connection of all the gate outputs would be prone to failure because a single short would eliminate all channels. For this reason a number of

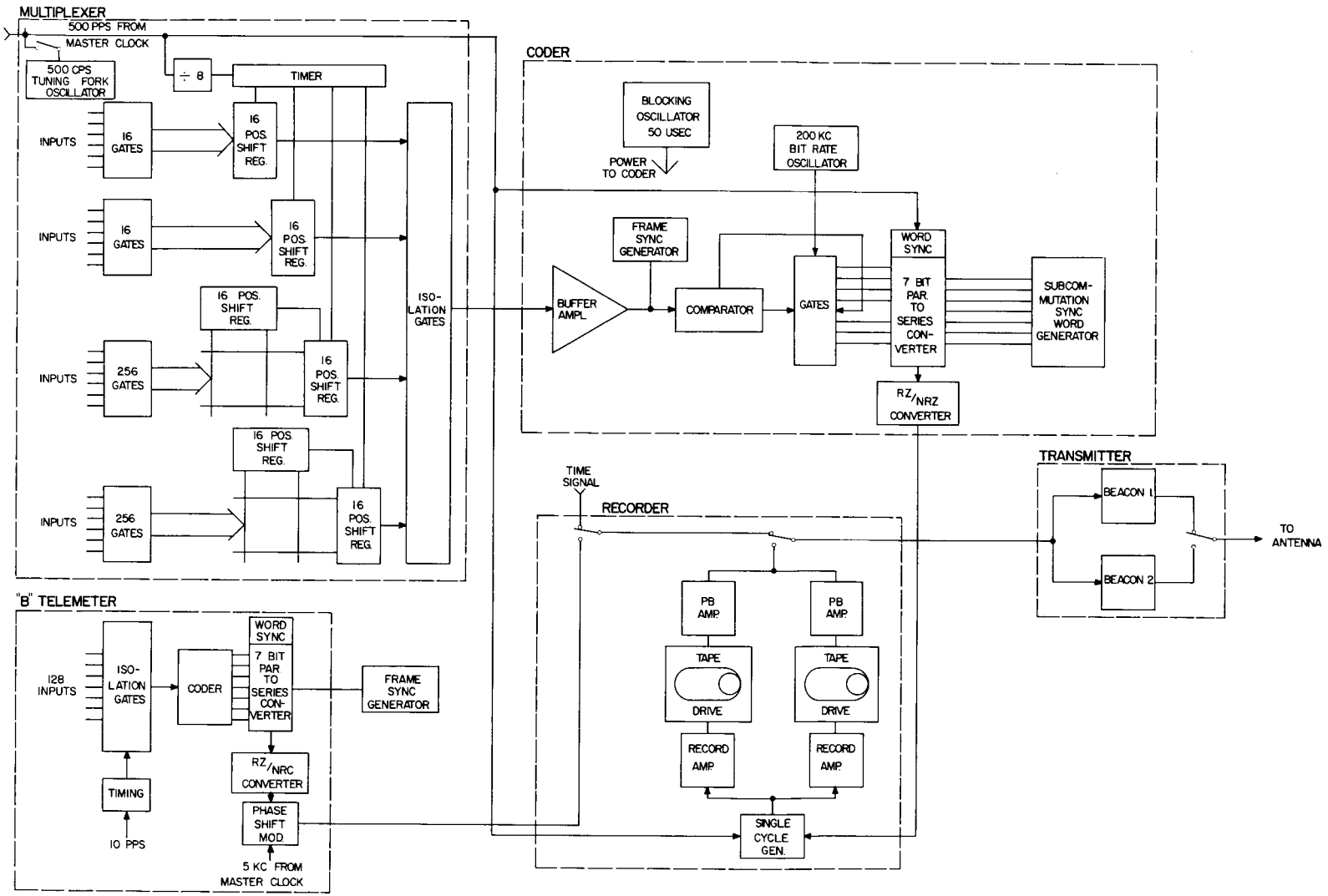

Figure 6—Nimbus PCM telemetry

isolation gates are provided so that failure of a single gate deactivates only a limited number of channels. The time sharing multiplexer, as described, feeds a single connector to the coder, which contains the analog-to-digital converter, a parallel-to-series converter, and the synchronization generator. Analog-to-digital conversion is accomplished by comparing the input signal to a binary-weighted reference voltage applied through gates at a faster rate than the fixed bit rate. For power conversion coding is performed within 50 μsec at a rate of 200 kc. The code is then stored in a core buffer where the word sync bit is added and read out at the bit rate of 500 pps. Additional windings on the cores are used to apply the sync word for the subcommutation code generator. Frame sync is generated by application of a maximum voltage into the analog-to-digital converter. A return-to-zero output from the coder is converted to nonreturn-to-zero. This signal gates a single cycle per bit of the 500 cps coherent source, which in turn drives the record head of the tape recorder through a record amplifier.

"B" System

The "B" telemeter cycles through 128 data channels preceded by three synchronization words, the first one being all ones succeeded by a word all zeros and another word containing all ones. The bit rate of 10 pulses/sec is again furnished by the master clock. The pulse train resulting from coded output uses the nonreturn-to-zero method. A coherent 5000 cps subcarrier signal derived from the master clock is phase-shift keyed by the pulse train. When commanded for "B" telemetry the 10 kc time code signal is turned off so that interference is eliminated and a higher modulation degree can be used on the transmitter, if desired.

The logic for the "B" telemeter is very similar to that of the "A" unit. The multiplexer samples the 128 channels and feeds them through isolation gates to the coder. A parallel-to-series converter uses the 10 bit/sec master clock signal for readout in a similar fashion to the "A" system. Availability of an identical coder permits its redundant use in case of failure. Transfer between the systems is accomplished by command (not shown in Figure 6).

Transmitter

Justification for the use of the modulation techniques and a listing of system parameters is in order. The choice of AM on the transmitter was made to satisfy the Minitrack requirement for a stable carrier with no sidebands of significant power closer than 1000 cps, and, secondly, for convenient autotrack acquisition. Furthermore, AM lends itself to very simple modulator circuitry. Transistors can be used to achieve the 350-mw CW power so a reduction in power, possible by application of wide-band modulation techniques, would not substantially change the circuit design concept, but would complicate the modulator. Subcarriers must be used because of the dc nature of PCM and because of the

carrier-to-sideband separation needed. Phase-shift keying is easily accomplished in a ring modulator and will yield a small modulation improvement.

A more detailed discussion of the properties of tape recorders will follow, and it will suffice to say at this time that speed variations of the tape result in phase and frequency variations which would make a detector for a phase-shift keyed signal from the tape recorder difficult to design. By recording amplitude, the amplitude instability of magnetic tape is traded for the phase instability. However, tests proved it to be the lesser evil.

The choice of transmitter power is determined by the following considerations:

1. Telemetry must be received even when the satellite tumbles, for analysis of control system check points.
2. Allowance for a high fade-margin will be made, since the spacecraft frequency is larger than one wavelength of the frequencies involved and design of an omnidirectional antenna pattern is very weight consuming.
3. Marginal reception at the horizon or under tumbling conditions is permissible.

By using the range equation

$$\frac{P_{received}}{P_{transmitted}} = \left(\frac{\lambda}{4\pi \text{ distance}}\right)^2 \times \text{antenna gain product},$$

the path attenuation is found to be 146.5 db, from the tracking frequency of 136.5 Mc and an horizon distance of 3700 km. Because of the possibility of the spacecraft tumbling, a requirement was introduced that a turnstile pattern must be generated on the spacecraft antenna if possible. Such an antenna ideally consists of two dipoles at right angles to each other, each fed in quadrature. Because of the right angle mounting, no coupling is experienced and each can be considered independent of the other. Radiation in the antenna plane is linearly polarized, normal to the direction of propagation. Radiation normal to this plane is right-handed circularly-polarized in one direction, and left-handed in the other; propagation in any other direction experiences an elliptically polarized signal. Receiving equipment must never experience a loss greater than -3 db. Ground receiving antennas use 85 foot parabolic reflectors with low noise parametric preamplifiers, driven by separate cross-polarized linear elements. The antenna gain is 26 db at 136.5 Mc. For computation of the signal-to-noise ratio the sky background must be taken into account. Extensive measurements performed by Balton, Westfold, and Reber show that the antenna temperature will rarely exceed 1000°K (Reference 5). The receiver temperature can be neglected when compared with this figure and therefore the noise power is found to be -148 dbw, with 60 kc as the receiver bandwidth. If 350 mw of power is radiated, the ratio between power received and noise power is 24 db; so an 80 percent modulated AM transmitter will yield a 19 db S/N ratio after demodulation. For a single bit error probability of

10^{-3}, there would be a fade margin of 10 db for imperfections of the antenna pattern. As a discussion of the antenna system will reveal later, reception will be marginal for a tumbling satellite at horizon distance. However, for zenith altitude, 19 db is realized, so that data can satisfactorily be received under this condition.

Arrangement of the channels is such that 128 of the most important test points are telemetered by the "B" telemeter in addition to being recorded. The extremely low data sending rate requires only 100 cps bandwidth for the subcarrier so that a subcarrier predetection S/N ratio of about 45 db is available. A wide fade-margin can be accommodated, and phase-shift keying will further yield a small modulation improvement, so that under all conditions a negligible error rate will be experienced.

The explanation of the spacecraft, with all its basic components, is now complete – except for an antenna system which will be explained later. The basic spacecraft weighs 500 pounds, including antennas, and continuously consumes 100 watts.

SENSORY SUBSYSTEMS

Television

Many considerations, including linear resolution, maximum transmission time per pass, bandwidth, and orbital characteristics, enter into the choice of system parameters. Time and bandwidth are interchangeable but time depends on the choice of satellite antenna beamwidth and so does its gain.

The resolution of a television camera and the postulation of area coverage and gray scale levels determine television information content. Since a satellite utilizing TV cameras can be considered an indefinite source of information, processing must occur at the same rate at which information is gathered. The time lag between collecting the data and receiving it at the ground station is arbitrary but must not exceed a certain limit since its value diminishes with time. For instance, if the data is received soon enough a weather analysis map for weather forecasting may be made from television pictures received at the ground station. In other words, the weather is to be forecast rather than studied after it happens. For this reason pictures are readout as soon as the satellite passes over a ground station.

Ideally, a single ground station should be placed at the North or South Pole, but adverse conditions at those locations make this impractical. A survey of more conveniently located sites quickly reveals that more than one station is then needed if every pass is to be readout. Even by placing some burden on the satellite in providing storage for two orbits, more than one is needed if the true polar station is to be avoided. But temporarily only one ground station, located at Fairbanks, Alaska, is available (Figure 7). This station

is provided with a high-gain antenna (85 ft. parabolic reflector). Figure 7 illustrates the proposed Nimbus orbital paths on the range of acquisition for the Fairbanks' site. A total of fourteen orbits per day are possible. The two circles around Fairbanks cover ranges of 1200 and 1400 nautical miles. They are intercepts of a conical view, 5 and 10 degrees, respectively, above the horizon from Fairbanks, with an orbital altitude of 600 nautical miles. With a viewing time of 5-10 minutes (e.g.) ten of the fourteen orbits are covered for this altitude.

The question then arises whether to use a narrow-beam high-gain antenna on the satellite, or a wide-angle transmission cone. Rigorous treatment leads to mathematically trivial solutions because of the square law relationship of cone angle and antenna gain and the $1/R^2$ dependence on transmitter power. The problem can be illustrated simply by assuming an overhead pass and plotting the transition time of the antenna cone against the value of the cone angle (antenna beamwidth). (See Figure 8.) Conveniently, orbital altitude is used as a parameter. Since time and bandwidth can be exchanged linearly, transmitter power increases (or decreases) proportionally with them. But for small antenna angles the highest antenna gain and widest bandwidth (shortest transmission time) is the best choice, so equipment limitations would force a compromise. The plots further show that for large angles a very favorable trade of transmission time vs. cone angle can be effected, thereby compensating for the inverse square law dependence on distance. Thus, the last point shown on the graphs will be chosen. This is the earth disc-viewing angle as seen from the satellite vantage point. For a 1000-km orbit, this angle is 122 degrees with a corresponding time of 17 minutes. Orbital passes other than overhead passes will shorten this time; as a result, 10 minutes was chosen as a compromise time.

The number of picture elements varies quadratically with the linear (or angular) resolution desired. Experience gained in the TIROS series shows that coverage is more important than resolution and that resolution elements need not be smaller than 1.5 km. Selection of television tubes becomes simple if circuit complexity, ruggedness, weight, and power of the various choices are compared. The advantage in sensitivity offered by the image orthicon, compared to the vidicon, is not sufficient to make its use feasible in the earth's shadow under star illumination; during daylight a vidicon is completely adequate. So the vidicon will be used. Angular resolution limitations are determined by the number of lines an electronic scan system can provide. Laboratory models of 1-inch diameter tubes with a 1/2-inch photosensitive area have achieved 1200 to 1500 lines, indicating that 800 lines is a reliable, practical limitation. Further related limitations of a different nature will become apparent from the tape recorder design characteristic that will be used as the storage medium.

Consider the geometry of a retrograde astronomical orbit in spring or autumn when the sun is directly over the earth's equator (Figure 9). Suppose the satellite passes just overhead; after one period (107 min.) it will again pass the equator. The earth rotates 27

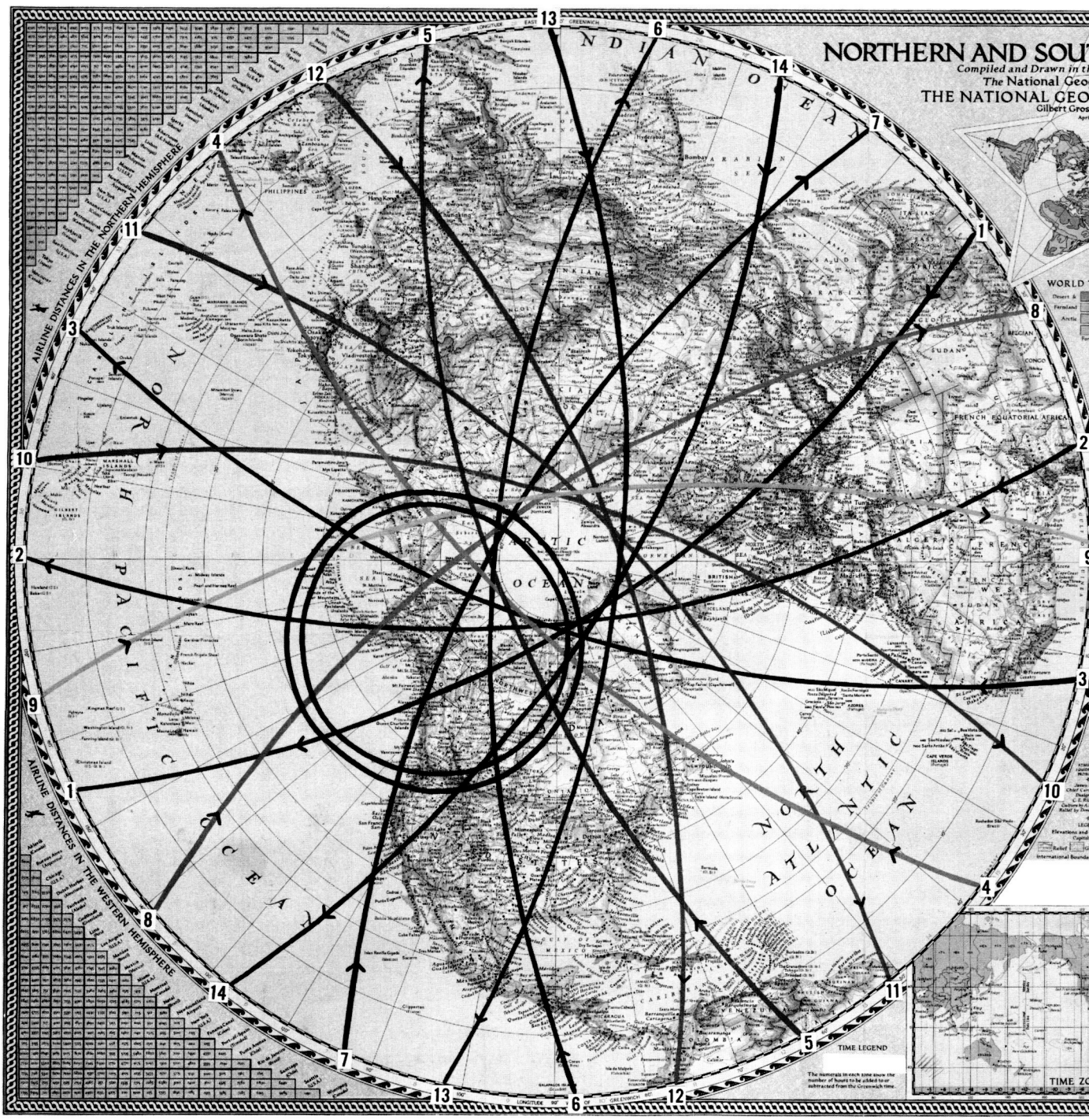
NORTHERN AND SOUT
Compiled and Drawn in th
The National Geo
THE NATIONAL GEO
Gilbert Gros
AIRLINE DISTANCES IN THE NORTHERN HEMISPHERE
AIRLINE DISTANCES IN THE WESTERN HEMISPHERE
INDIAN OCEAN
NORTH PACIFIC OCEAN
NORTH ATLANTIC OCEAN
ARCTIC OCEAN
PHILIPPINES
FRENCH EQUATORIAL AFRICA
TIME LEGEND
The numerals in each zone show the number of hours to be added to or subtracted from the Greenwich time.
TIME ZO

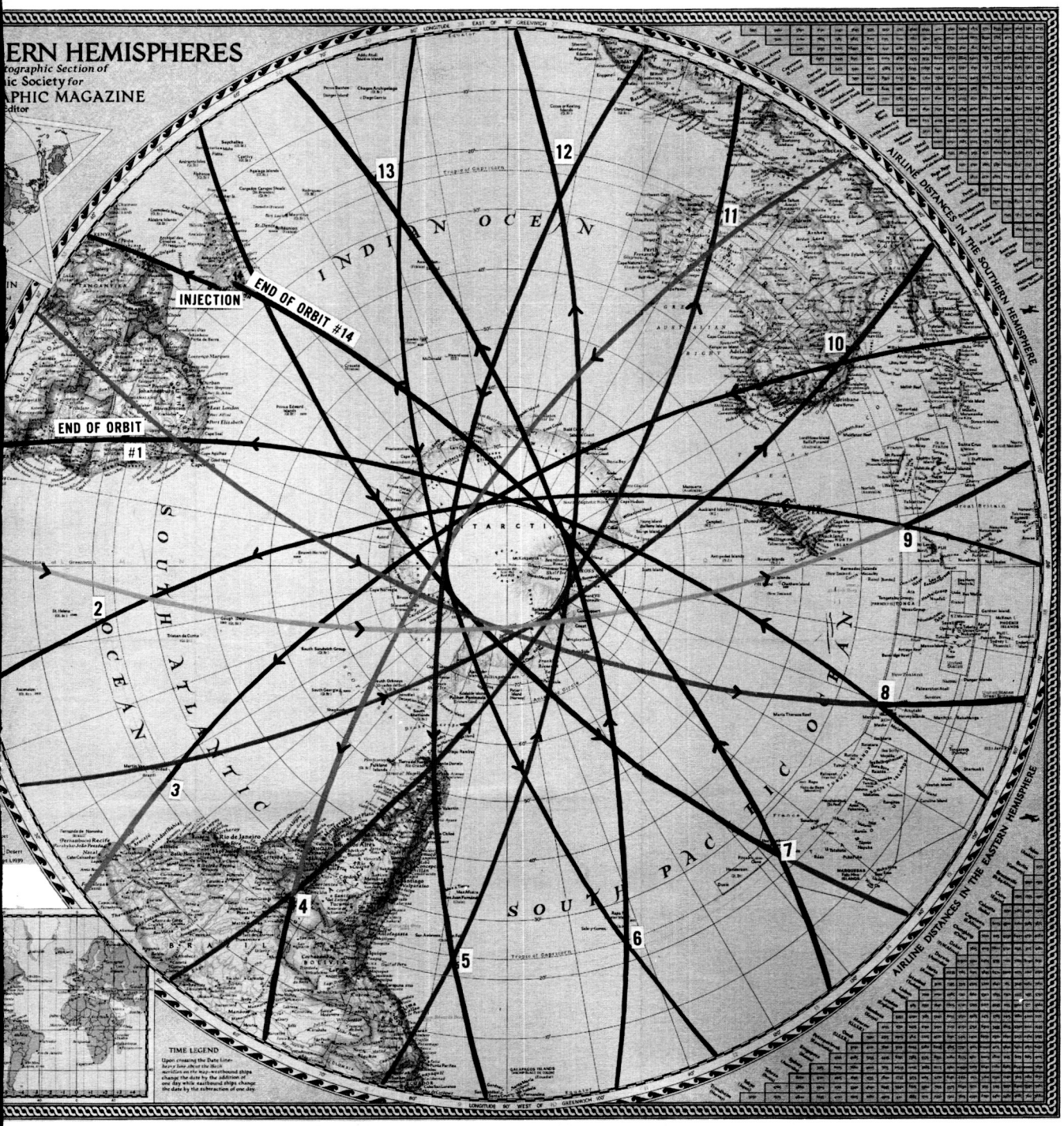

Figure 7—Orbital coverage from Fairbanks, Alaska

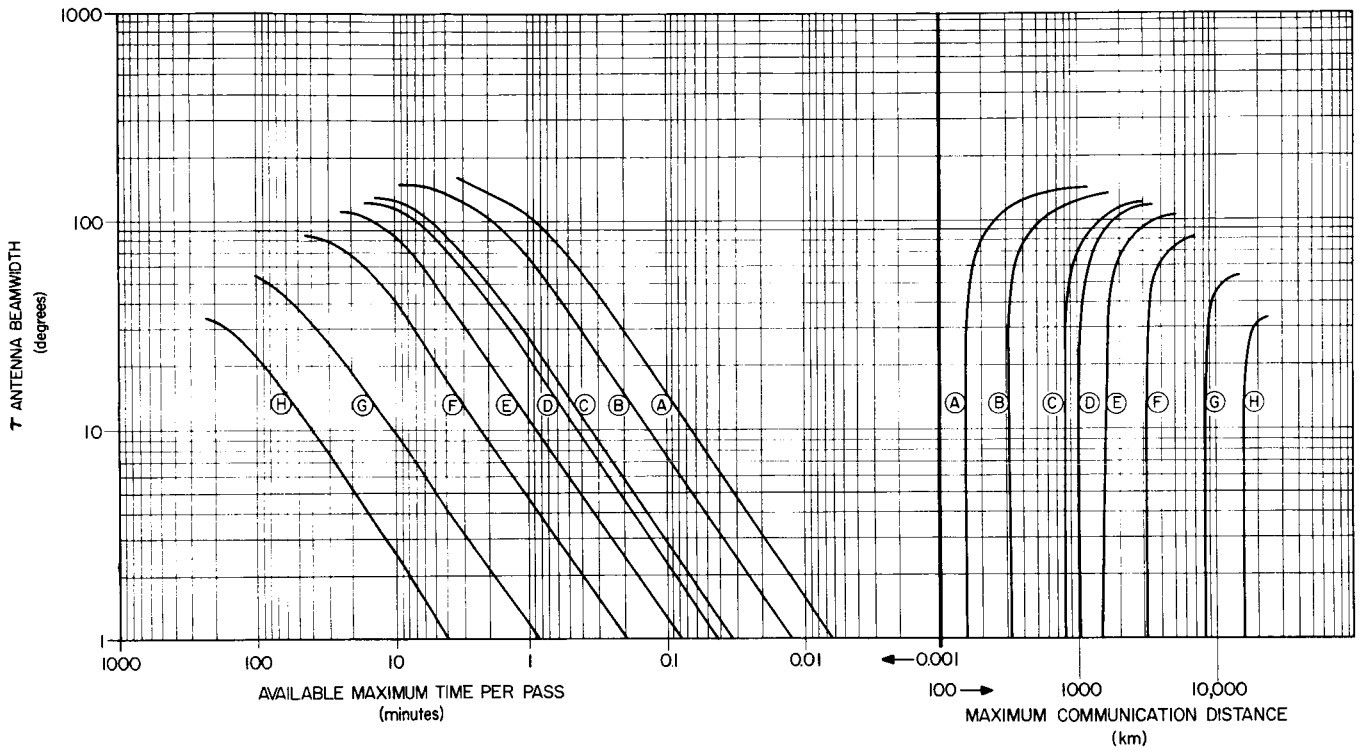

HEIGHTS		
SYM	KM	MILES
A	160.9	100
B	321.8	200
C	804.5	500
D	965.4	600
E	1609.0	1000
F	3218.0	2000
G	8045.0	5000
H	16,090.0	10,000

Figure 8—Antenna beam-width vs. telemetry time and communication distance

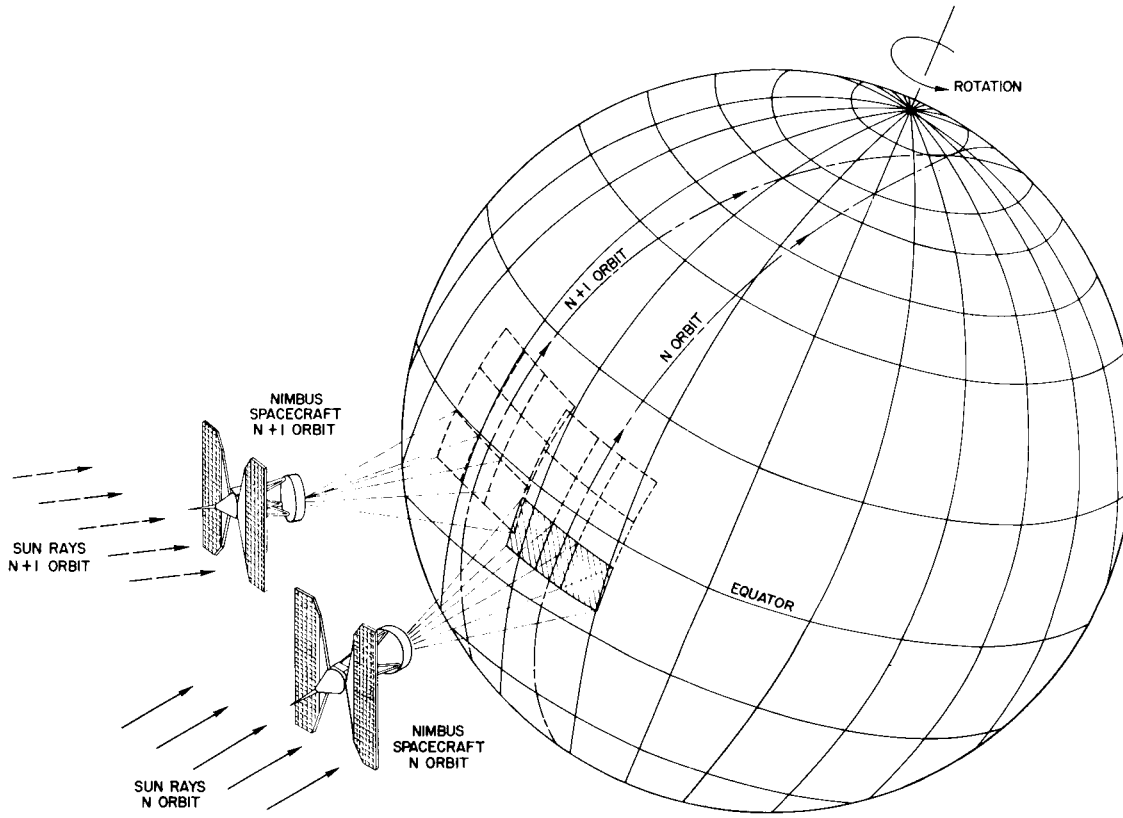

Figure 9—Nimbus television coverage

degrees around its axis during that time (an arc of 3000 km). The TV camera optics must encompass an angle of 108 degrees in order to view the area given by the 27 degree earth sector. This view divided by any multiple of 800 lines yields the angular resolution and the number of cameras required for that number of lines. Three cameras arranged like a fan (Figure 9) would encompass 36 degrees along the equator with a lens having a field of view of approximately 51 degrees. Linear resolution varies from less than one km (0.8 km) at the optical axis of the center camera to more than 2 km at the corners of the side cameras.

In order to determine the optic characteristic, the light-energy level must be derived for the photosensitive surface of the vidicon. This depends on the camera's sensitivity and exposure time. Long exposure time causes smear of a picture when a camera moves, as demonstrated by a photograph from a camera held by a human hand. Camera movement referred to the earth's surface is 6 km/sec, so that smear less than 10 percent of a picture element demands that exposure time must be held to less than 130 milliseconds. The residual instability of the spacecraft is held to ±0.05 degree/sec and a similar computation for less than 10 percent smear leads to the desire for exposure times of less than 90 milliseconds. In the worst case the errors will add linearly; by allowing a small safety factor, 40 milliseconds exposure time was decided on. Basic lens parameters are now fully

determined; however, search for a commercial product has not revealed a lens with these exact values. A Bell and Howell 17 mm lens with a 49 degree field of view was finally selected as having close to the desired angles and exhibiting acceptable optical properties, ruggedness, and small weight. It will be noticed that illumination will decrease with increasing northern or southern latitude, and that the three-picture pattern overlaps from orbit to orbit at positions other than at the equator. Rigorous elimination of the redundant information thus generated could save as much as 30 percent of the information to be transmitted; however, turning the two side cameras off when the center camera could handle the swath width saves only a few frames, so no attempt will be made to reduce the amount of information.

Figure 9 reveals that illumination is greatest at the equator and correspondingly less as the distance from the equator increases. Previous measurements and knowledge of cloud properties show that the camera f number is 16 over the equator and 4 near the poles. This latter setting corresponds to a sun angle of 5 degrees, a value experimentally determined with the TIROS I satellite by taking pictures in succession over a night-dawn-daylight section of the earth. The optic contains a variable iris which is continuously varied from an f-16 setting to an f-4 setting, according to Lambert's law, by a cosine potentiometer attached to the solar paddle shaft and a motor drive.

A suitable timer programs the camera and tape recorder operations so that pictures are taken every 108 sec, exactly the time the satellite takes to traverse from picture center to picture center. Thus 32 three-picture sets cover the illuminated half of one orbit from near the South Pole to near the North Pole. The storage medium then must accommodate more than 64 frames. For switching the system the cosine potentiometer, generating cosine voltage variation for the iris setting over the orbit, feeds a switch with an adjustable threshold. When the voltage is below this threshold, the cameras are turned off. Since no more than 10 minutes will be used for one series of 64 frames, 9.4 seconds are available per frame.

Since the resolution has been selected, as well as the time, from antenna and orbital considerations, the video bandwidth is easily found. In such an idealized computation the maximum video frequency is generated when the beam scans a pattern where half the picture elements are white and the adjacent (remaining) elements are black. One further property of the vidicon tube offers flexibility to the system designer; the image on the tube illuminates the photoconductor, which, in conjunction with a dielectric, generates a charge pattern. Thus certain storage properties exist in the tube. A considerable advantage becomes evident since exposure time and scan time of the tube can be quite different.

Since exposure must be limited for stability reasons to 40 milliseconds, because of time considerations approximately 9.4 seconds will be available per frame on transmission, and no more than 108 seconds can be used from one frame to the next. Use of the various times for frequency conversion or expansion would demand different record or playback

speed for the tape recorder. It was decided not to make the tape recorder this complex. Picture recomposition in a receiver depends on relative timing of picture elements with respect to fixed markers. Standard commercial television uses line sync and frame sync pulses; for Nimbus only line sync is provided, thus time is lost and must be deducted from the frame time interval (approximately 30 percent of line time) in computing the required video bandwidth. As deduced before, tape-recorder speed will be the same for record and playback, requiring the start-stop operation of the recorder for each time frame. Acceleration time and deceleration time constitute further time loss. This is equivalent to adding tape length but does not affect video bandwidth. Consideration of all these factors shows that approximately 6 sec/frame are available, so 5.3 sec are used for actual video readout, resulting in 60 kc video bandwidth. Tape-recorder speed should be absolutely constant but cannot be so. The effect of this speed variation is equivalent to changing the relative time-scale of the electronic scanner. The result is an apparent crowding of picture elements when speed is slower than the linear constant scan would demand, and an apparent expansion when speed is higher than the nominal value. A maximum deviation can be established by postulating that no picture element will be displaced more than 10 percent of its width, i.e., 0.0125 percent of the width of the 800 scanning lines. This value cannot be achieved in present-day tape recorders, so higher displacements must be tolerated or compensation techniques employed.

Transmission to the ground employs an FM/FM frequency-sharing system as the most practical means to handle considerable information bandwidth and maintain an adequate S/N ratio without complex circuitry (Figure 10). A timer (not shown in Figure 10) turns the camera circuitry on for a warm-up period and the tape recorder is brought up-to-speed after an appropriate interval. At exactly 108 seconds after the preceding frame, the shutter is activated to expose the vidicon. Concurrently, a flash tube exposes a narrow gray-scale wedge to furnish a calibration with each picture. The timer then generates the readout scan sequence. Video output is fed to a voltage-controlled oscillator of 95 kc deviated ±24 kc by the video output. Positive modulation is used and line-synchronization pulses are inserted as negative signals below the black level. Each individual camera and modulator feeds a separate head and track on the tape recorder. A fourth track is used to record the 50 kc timing signal serving both to record picture time and to compensate for speed variations on the ground. The recorder uses 1/2 inch tape wound on two reels, driven by a single, reversible-speed, synchronous motor. The drive voltage has a frequency synchronized with the 400 cps 2-phase master clock output. Record and playback speeds are 30 ips. Erase is performed immediately after playback by a dc magnetic field. Frames are recorded in sequence, as previously described, and the tape is stopped by a limit switch when the end is reached. When commanded to readout at any tape position before the limit is reached, the speed is reversed and the three camera signals are processed through a doubler and mixer circuit with local oscillators, generating the frequency-sharing spectrum (Figure 10). This information is summed with other information to feed a 5-watt S-band

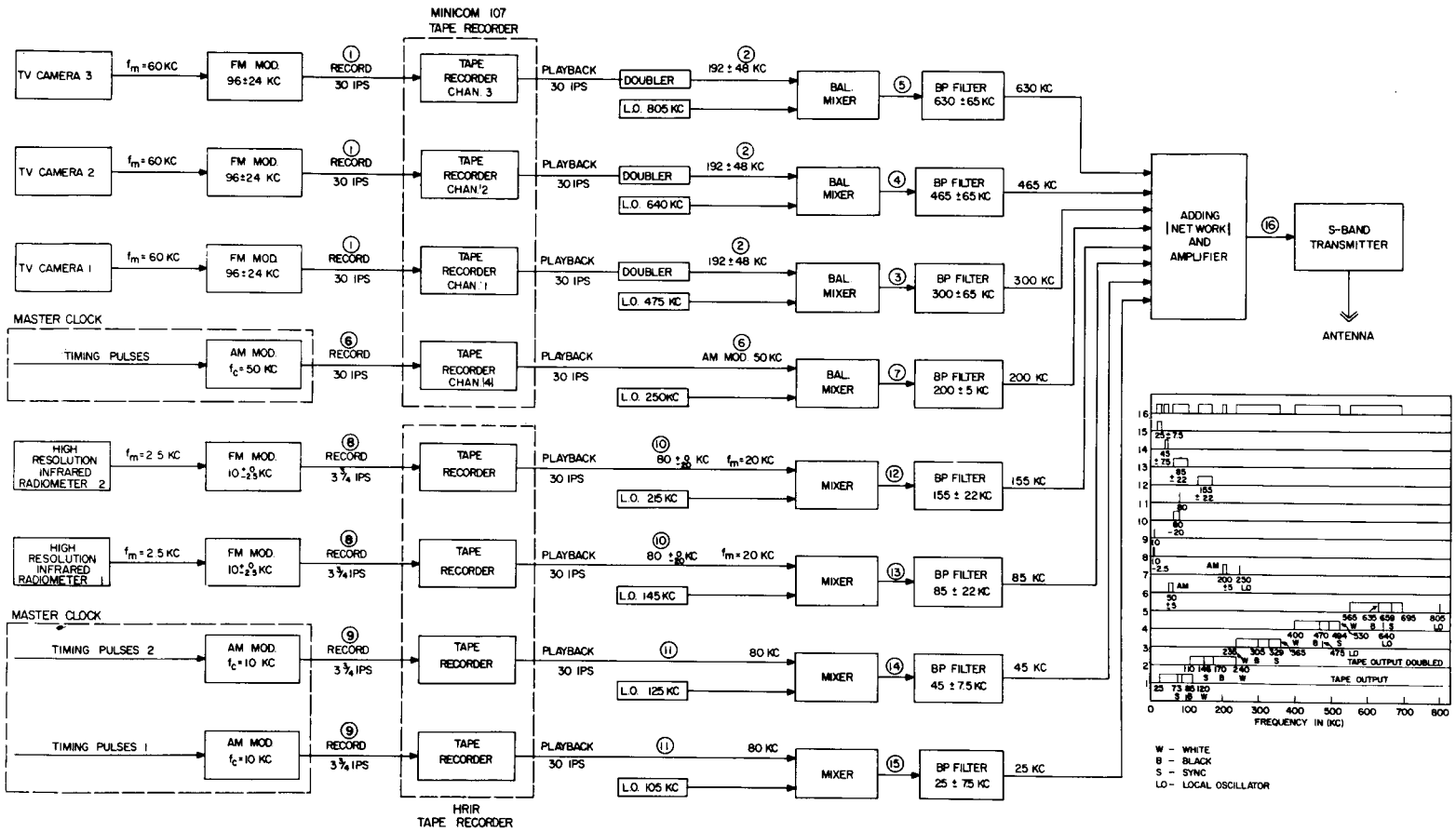

Figure 10—Television subsystem block diagram. Circled numbers refer to the block at right. The symbol f_m is modulating frequency; f_c is carrier frequency.

transmitter. The center frequency is held stable to ten parts per million by using a crystal discriminator in a feedback loop. A varactor diode modulator provides the composite voltage which produces a deviation of ±1.5 Mc. The operational importance of television was mentioned before; operation for a half-year or longer is virtually impossible to guarantee. Random component failures could cause incomplete orbital picture coverage. To increase the chance of satisfactory operation, duplicates of the cameras, tape recorders, and transmitter will be included in the spacecraft. Appropriate switching by command will eliminate defective components and replace them with identical ones. Before an analysis of the FM/FM system is made, the remaining part of the spectrum associated with the lower half of Figure 10 will be discussed.

High Resolution Infrared Radiometer

Television will show the meteorologist complete cloud cover over the illuminated side of the globe, measured at local noon, because of the noon-midnight orbit. Television cannot be used during the midnight half of the orbit because the vidicons lack sufficient sensitivity to televise under star illumination. Nor is any other tube presently capable of the required sensitivity. As known from fundamental physics, a body at a certain temperature radiates energy having a spectral distribution which can be computed from Planck's law. In the case of the sun, the peak of emission takes place in the visible spectrum; this light from the sun is reflected by clouds, making them visible from space. Since the earth is a body at 250°-260° K, the peak of its emissive spectrum lies at 10-11 μ. Clouds located between a detector and the earth (which is a radiator in this case, not a reflector) will shield the "light source" because they are at much colder temperatures. Considering atmospheric constituents and their effect on infrared radiation, one would conclude that radiation measured in 3-4 or 10-11 μ bands will give a nighttime cloud cover picture. TIROS II demonstrated this for the first time for the 10-11 μ band (Reference 1). Infrared systems may utilize a large variety of detectors with many orders of magnitude difference in sensitivity among them. The time constant, noise properties, and variations of these with temperature, cover a considerable range, so that a great number of variables must be taken into account. There is much less energy available from the earth at 4 μ; however, lead selenide can be utilized as a detector, thus providing higher sensitivity and lower noise than a detector for 10-11 μ radiation. Thus, a higher video output can be obtained from the weaker (3-4 μ) radiation than from the stronger (10-11 μ).

The infrared detectors have design parameters for optical resolution based on the detector dwell-time on the target. In contrast to television, no image is formed; the detector only integrates the energy received from the target. Composition of a picture is achieved by scanning with a mirror so that the detector continuously sweeps from horizon through the sky until it starts at the horizon again. The optical axis prescribes a plane. The entire assembly, the radiometer, is mounted on the satellite in such a way that this plane is

normal to the instantaneous velocity vector. Fitting line after line, thus scanned, to a picture requires that Nimbus advance the width of one picture-element during the time it takes the mirror to scan one revolution. The optical angle is thus determined by this method of scan.

The Nimbus high resolution infrared radiometer (HRIR) is designed for an angle of view of 2.8×10^{-3} radians and a 2360 cps video bandwidth. It scans 700 elements at 2 rps over the 122 degree angle from horizon to horizon, thus achieving 2.8 km linear resolution at the center.

The light beam is mechanically chopped in accordance with standard practice to avoid dc amplifiers and to be independent of detector bias stability. The ac signal is amplified and rectified so that a video bandwidth from dc to 2360 cps must be processed. After a scan cycle from horizon to horizon, an analog signal will appear, declining rapidly when the sky is in the field of view to practically a zero-output voltage. The hot spacecraft, over more than a 180 degree angle, will produce saturation in the amplifiers followed by a zero sky signal. During this sky-sweep time, a permanent magnet on the mirror axis triggers a gate and a multivibrator so that three pulses are generated, serving to synchronize ground equipment. Stability of the spacecraft enters directly into the problem of recomposing the picture, since scan lines must be adjacent to each other. The stability rate is 0.88 milliradians/sec or 0.44 milliradians/scan. Within a 2800 meter picture-element, a 440 meter smear might degrade the resolution from 1.5 to 3.02 km. However this is not strictly true since the stability rate is ±0.05 degree/sec, and over the entire orbit optimum resolution will be 3.240 km.

The HRIR output modulates a 10 kc voltage-controlled oscillator by 2.5 kc (Figure 10). The sky level corresponds to 10 kc and the hottest signal deviates to 7.5 kc.

A tape recorder, almost identical in design to the television recorder, records the signal at 3.75 ips. A four-track head combination, similar to the TV camera recorder, is used. One track receives the radiometer signal; another records the 10 kc timing signal from the master clock. When one tape reel is fully unwound, the movement is reversed and the signals are switched to the remaining two tracks. The recorder continues to record until the reel is empty again and then is stopped by a limit switch. When interrogation is commanded at this position or any arbitrary position, the direction of tape movement is reversed and the speed increased eightfold. All tracks are applied to four heads simultaneously and the local oscillators and mixers generate a frequency-multiplexing spectrum. Both the television and HRIR tape recorders carry momentum compensation motors. Rotation of the moving parts in either tape recorder generates a reaction movement which tends to turn the spacecraft; compensation eliminates the movement and saves control-system energy. Compensation for start and stop transients, or for the different moments of inertia for fully wound tape reels as opposed to empty reels, is not fully accomplished.

By coincidence, flutter and wow requirements for this subsystem are almost identical to those of the TV subsystem.

TV and HRIR Subsystem Parameters

Design principles of FM/FM telemetry systems have been treated exhaustively in the literature (Reference 6) and it will suffice here to repeat only the most pertinent facts. The spectrum of a frequency-modulated carrier contains many sidebands spaced in multiples of the modulating frequency (theoretically broadband) on both sides of the carrier.

The S/N ratio at the output of an FM discriminator is better than the ratio which would be obtained by AM transmission; this improvement is proportional to the deviation. If white noise is the disturbance of a FM transmission link, an ideal FM discriminator responding to frequency only, not to amplitude, yields noise amplitudes which increase proportionately with frequency in the familiar triangular noise spectrum in FM reception. A complex waveform produced by adding many subcarriers will, therefore, experience different channel S/N ratios, the worst for the highest-frequency channel and the best for the lowest-frequency channel. Because of this, the voltages of subcarriers are not chosen to be equal but are weighted so that the higher-frequency channels cause more deviation on the RF carrier than the lower-frequency channels.

The filters used in the satellite and ground equipment warrant a brief statement in regard to their effect on a frequency-modulated carrier. It can be shown that distortion in the amplitude response of a filter has negligible influence on the FM signal as long as the distortion is symmetric (Reference 7). Asymmetry causes an increase in the time constant so that transients will not be reproduced faithfully; phase distortion of the filters enters strongly and causes amplitude distortion of the demodulated waveform and group delay. This is a problem in transmission characteristic of TV-type signals, since the relative time-scale within a sweep must be maintained. In contrast to all the disadvantages of FM, its advantages lie in the amplitude insensitivity of magnetic-tape recordings and the noise-improvement properties in both the S-band link and the subcarriers. It is noteworthy that crosstalk, the most bothersome effect in multiplexing, is largely rejected, like any other noise signal.

An 85 foot parabolic reflector with separate linear elements is available with a preamplifier having a noise figure of approximately 4 db. For a 1700-Mc signal and a 3-Mc IF bandwidth, a 25 db carrier/noise ratio is obtained, since the antenna has 52 db gain. Communication distance is again assumed to be 3700 km (to the horizon). Tumbling of the satellite need not be considered because television cannot be received from an unstable spacecraft. For the same reason no polarization loss need be taken into account. A small satellite antenna gain is realized but is not included in the computation because of the rather marginal 120 degree beam coverage, to be discussed later.

By using the appropriate video bandwidth (60 or 2.35 kc) and channel subcarrier oscillator frequencies, individual S/N ratios in excess of 35 db can be achieved (Reference 7). Crosstalk and the noise properties of the magnetic tape will reduce this value. On the other hand, the question arises as to what S/N ratio is required for visual presentation and what S/N ratio the detector yields (lead selenide or vidicon). The following is the equation for determining the individual S/N ratios:

$$\left(\frac{S}{N}\right)_{rms} = \frac{\Delta F_{RF}\ \Delta F_{sc}\ \sqrt{B}}{2f_{video}^{\frac{3}{2}}\sqrt{\frac{1}{3}f_{sc}^2 + \frac{1}{5}f_{video}^2}}\left(\frac{\text{Carrier}}{\text{Noise}}\right)_{rms},$$

where

ΔF_{sc} = peak subcarrier deviations due to video,

B = intermediate frequency (IF) bandwidth,

f_{video} = maximum video frequency,

f_{sc} = subcarrier frequency.

Commercial television can operate even under poor S/N ratio conditions as long as synchronization is maintained. The human eye, by integrating the noise over many frames, averages the noise and adapts to the consistent parts of the picture. Since Nimbus pictures have only a single frame, the noise is frozen at the specific instant the picture is finally exposed on film. Extensive tests show that 20 db is desirable but that even 15 db is acceptable to the viewer. Noise in the vidicon is extremely low, and composite measurements of the vidicon and preamplifier show that the first stage of the preamplifier determines the noise properties of the system. Careful selection of tubes yields 20 db ratios.

After taking detector noise into account, a lead selenide detector in the HRIR scanner still permits achievement of the 35 db S/N ratio. However, deterioration results from the limited stability of the subcarrier oscillator. Still, the final S/N ratio exceeds 25 db. It could be asked why telemetry power is not reduced or deviation decreased, thus saving bandwidth, but this is because spacecraft will carry equipment in the future which may need better S/N ratios or the amount of information to be transmitted in these future spacecrafts may be increased. Also, it is desirable to let the detector, not the telemetry link, determine the quality of the measurement. The system is purposely not optimized, but instead overdesigned, thus providing a safety margin for the long lifetime required.

Five Channel Infrared Scanner (Medium Resolution Infrared Radiometer)

Experiments for Nimbus were selected at a time when no meteorological satellite had carried instrumentation other than television. Subsequent launchings of TIROS II and III

yielded measurements of terrestrial and reflected solar radiation, which were of a basic research nature and had no immediate time-dependent application (Reference 9). For these reasons the same experiments flown in the TIROS series will be adapted for the Nimbus spacecraft. Measurements from a stabilized platform eliminate the difficulties encountered by those conducted from spinning bodies such as TIROS. The choices of the optical bands are as follows:

1. 6.5 - 7.0 microns – water vapor absorption
2. 10 - 11 microns – atmospheric window
3. 0.55 - 0.75 micron – visible reference and daytime cloud cover
4. 7 - 30 microns – thermal radiation
5. 0.2 - 4 microns – reflected solar radiation

Ninety-nine percent of the back-scattered and reflected sun energy falls within the band of channel 5. Channel 4 covers the range of thermal emission of the earth. Albedo and thermal emission will permit study of the energy budget of the earth from Nimbus findings. Channel 3 was chosen to give good contrast between clouds and background under sun illumination, serving mainly as a reference and aid for the human mind. Channel 2 measures the temperature of the earth in a band where the atmosphere is transparent. Since clouds are generally cooler than the surface of the earth, a map showing isolines of radiant emittance can be interpreted as a cloud cover map. This method is valuable since it works also on the dark side of the earth, which is unobserved by television cameras, and it can serve as a coarse backup for HRIR measurements. The difference between the terminal points of channels 4 and 2 is essentially radiation between 10 and 11, and 7 and 30 μ, characterized by strong absorption bands of carbon dioxide and water vapor. The spectrum of channel 1 corresponds to the region of water vapor absorption between 6.5 and 7 μ. The temperature profile and the relative humidity in the atmosphere determine the energy which can be observed by this channel. Although physically different from the HRIR radiometer, the five channel radiometer uses the same principle, i.e., it is a scanning mirror with detectors mounted at the focal point. Again, in order to avoid using dc amplifiers and for stability in the detectors bias, the light beams are chopped and the signals amplified in tuned amplifiers. Synchronous detectors rectify the signal so that five quasi dc outputs are available. Resolution and other parameters were chosen to be compatible with existing TIROS equipment. It follows from the same type of reasoning used for the HRIR radiometer that, since a 50-km optimum linear resolution is desired, an 8-cps video bandwidth must be provided for a 2.85-degree field of view optic scan at 7.9 rpm. Again it is assumed that the maximum frequency is generated when half of the picture elements are hot and adjacent ones cold.

The telemetry part of the instrumentation uses FM/FM, chosen mostly because of the ready availability of components and for historical reasons. As the ground system will show, PCM would be a better technique but cannot be applied because of tape recorder

limitations. The output of the five radiometer channels is fed to five subcarrier oscillators (Figure 11). These voltage controlled oscillators are of the phase shift type with symmetric amplifiers in the feedback loop, the gains of which are controlled by the balanced input signal. Each subcarrier oscillator is deviated 50 cps for full modulation.

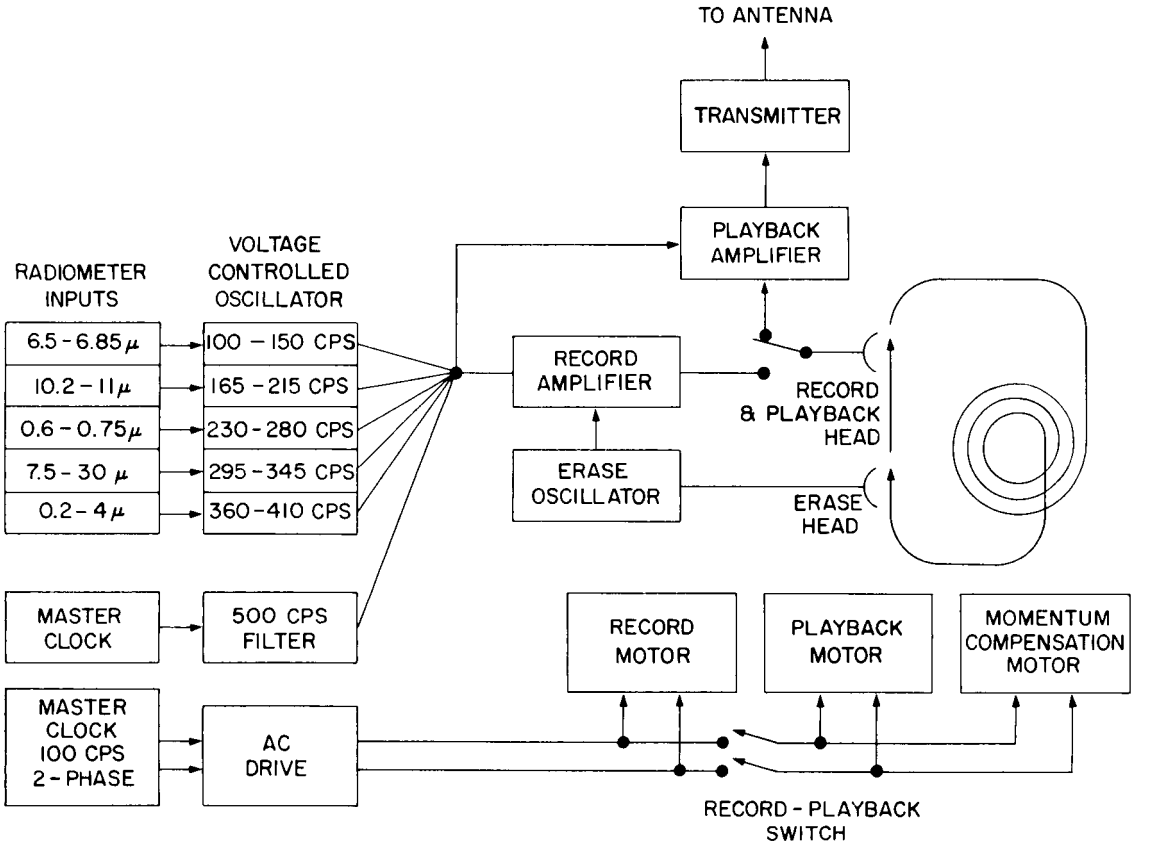

Figure 11—Nimbus MRIR subsystem

The five frequency bands are: (1) 100 – 150 cps; (2) 165 – 215 cps; (3) 230 – 280 cps; (4) 295 – 345 cps; (5) 360 – 410 cps. A 500 cps signal provided by the master clock serves as a timing reference similar to the 50 and 10 kc signals for the TV and HRIR information, respectively. Because of bandwidth limitations no time code is modulated on this reference frequency. The outputs from these five channels are summed and the resultant composite signal is equalized for a transfer characteristic correction in a record amplifier which drives the head of a miniature tape recorder. It is the same recorder used for PCM telemetry except for electronics. An oscillator provides an alternating current bias to the record head, and the signal required for the erase head. For convenience, erase of the magnetic tape occurs immediately before recording. As discussed before, the tape recorder is an endless loop, two-speed design recorder running at 0.4 ips record and 12 ips

playback speeds. The loop records continuously, day and night, except during a playback sequence. A hysteresis synchronous motor generates torque in the record mode by means of a mylar belt speed reduction. The motor is driven by the 100-cps two-phase signal delivered by the master clock. Playback is initiated upon command by applying power to the playback motor and amplifier. The motor is another 100 cps hysteresis synchronous motor. A third motor provides momentum compensation. A low flutter and wow of 2.5 percent peak-to-peak measured, without frequency limitations, is achieved by using precision bearings and ground-in-place shafts having tolerances smaller than 50 parts per million. A command pulse activates the playback motor, the playback amplifier, and a 2-w 136-Mc FM telemetry transmitter feeding the antenna.

Calculation of the system parameters can be performed in a similar way as for the television system and, because of the narrow-band information to be transmitted, the resultant S/N ratio is excellent. For horizon distance (3700 km), the same ground antenna conditions and unity satellite antenna gain for a 90-kc IF bandwidth would show a 29 db predetection S/N ratio. Individual channel S/N ratios and their weighting can be computed using the same equation as for the television system. With the use of the standard FM S/N ratio improvement, 35 db is found to be the average S/N ratio for the composite subcarrier oscillator signal.

In contrast to the cloud cover measurements, an absolute measurement is attempted rather than the reproduction of a relative contrast. Accuracy is therefore determined by the stability of the oscillators, the quality of the tape recorder, and primarily by the calibration of the infrared scanner. Temperature stability of one cps has been achieved, which corresponds to 2 percent absolute accuracy. The tape recorder speed ratio is subject to small variations as the temperature varies. These will affect the absolute frequency of the five channels but can be compensated for by making use of the clock reference. The worst deterioration is introduced by the tape recorder. Speed variations such as flutter and wow generate frequency variations which appear as noise after discrimination. Flutter and wow up to 300 cps is less than 1.5 percent of the output frequency of each oscillator. It is only significant to measure up to 300 cps because greater frequencies are highly attenuated in the output lowpass filter. A 10 percent peak-to-peak inaccuracy must be accepted relative to deviation which is a measure for the dynamic range. This clearly is the largest error in the entire subsystem. Accuracy is only 20 db and the peak signal-to-rms-noise ratio is approximately 30 db. Since accuracy and noise are determined by instrumentation properties and not by telemetry, no weighting of the subcarrier oscillators was attempted.

Antennas

The problem of an antenna system for Nimbus has already been introduced and desirable coverage requirements have been stated. A multiplicity of added constraints must be

met for a variety of system considerations. Flexibility gained by separating controls and power from the remaining equipment in the spacecraft is further enhanced if it is possible to place antennas on the sensory torus and not on the interconnecting truss or controls. Mechanical interference, during launch, with the shroud to be installed over the spacecraft must be avoided. Finally, the base area of the spacecraft should be unobstructed because the scanning sensors must have a clear field of view. (Since further measurements of the earth's atmosphere can be conducted only by viewing it from the base area a minimum of this area should be used for antennas.) An attempt to design the spacecraft to include all these constraints can be made only with the aid of experiments.

S-Band Antenna

For radiation of any selected frequency between 1700 and 1710 Mc, a cavity-backed double spiral radiates a circularly polarized wave. A Fiberglas cone will be used (Figure 12) which has two arms of two logarithmic spirals ($r = ke^a$) of copper, preferably made like printed circuits. The 50-ohm feed point is located at the apex of the cone and the feed cable is carefully trimmed along one of the copper spirals. The cone is mounted on one

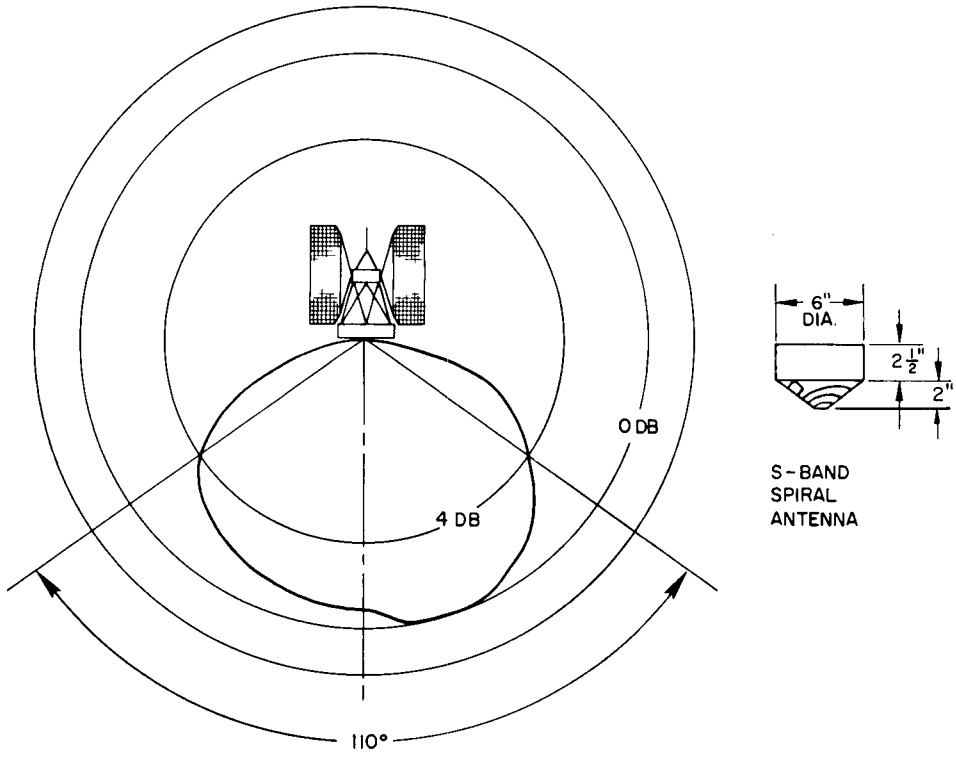

Figure 12—S-band antenna and pattern

side of a cylindrical cavity. As the measured pattern demonstrates, a 110 degree angle was achieved at -4 db points, a fair approximation to the desired 120 degree coverage. For implementation of redundant transmitters coupling measurements have been performed and as long as separation is held to 30 inches or more isolation will be 30 db or greater.

Command Antenna

In order to have an efficient command subsystem for the spacecraft, a high power transmitter is used as the radiation source. The most elementary type of antenna for this purpose is the whip or dipole antenna. Antennas of this type, when mounted on the top of the controls container, will show a null pattern in the axis of symmetry. Since the possibility that the spacecraft will be interrogated at the zenith is small, this restriction is not serious. A whip antenna shows the familiar circular dipole pattern in the plane normal to the axis of symmetry. Therefore, when the spacecraft rises over the horizon the transmission ray encompasses 60 degrees with the spacecraft axis of symmetry. It becomes necessary therefore to tilt the lobe a maximum of 30 degrees toward the truss and maintain this shifted pattern regardless of the effect of solar paddle movement. The interrogation frequency is approximately 120 Mc or a wavelength of 2.5 meters. The solar paddles are 2.7 meters long, so severe coupling or reflection from the paddles must be expected. A series of scale measurements (Figure 13) revealed a token amount of decoupling between paddles and whip if the spacecraft was given the electrical appearance of a cone. This leads to the employment of a conical mesh construction on the top of the control housing, and a conical mesh skirt extending about two-thirds of the way down the truss structure from the controls housing.

Sample patterns taken with 0, 45, and 90 degree rotations of the solar paddles reveal that a dipole pattern is approximated but that dependence on the paddle position is strong,

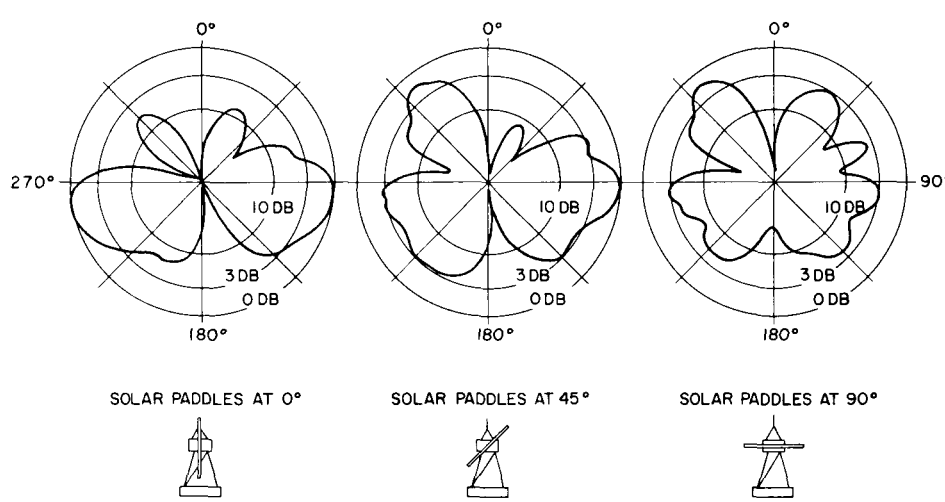

Figure 13—Nimbus command antenna pattern

as the deep nulls for 0 and 45 degree paddle positions show. It will be noted however that interrogation is unlikely to be commanded from this direction because of orbital geometry limitations.

Tracking and Telemetry (136 Mc) Antenna

By far the most difficult design is that of the 136 Mc telemetry antenna. The maximum spacecraft height of 3 meters is approximately equal to the wavelength of 2.2 meters which is the wavelength of this frequency. Consequently a turnstile pattern can only be approximated by using a multiplicity of radiators properly phased. This approach was rejected because it is extremely weight consuming and would require elements on the torus and other parts of the spacecraft. Fortunately, selection of the radiating element itself meets with lesser difficulties. Radiating rods or slots were not considered because they are too bulky. The quadraloop antenna (Reference 10), developed by New Mexico State University is used because it is the most compact, lightweight radiator developed for this frequency (Figure 14). A U-shaped conductor with one short end, is filled with a suitable dielectric in the gap left by the U. Close to the short end of the U, drive power is applied across the two branches. The remaining part can be considered a transmission line. By loading the line at the open end with a capacitor, the loop antenna can be physically shortened and tuned. Naturally these conditions hold for a rather narrow band only and tuning must be provided for the specific frequency. Matching of the drive source is dependent on the distance from the shortened end and is determined experimentally.

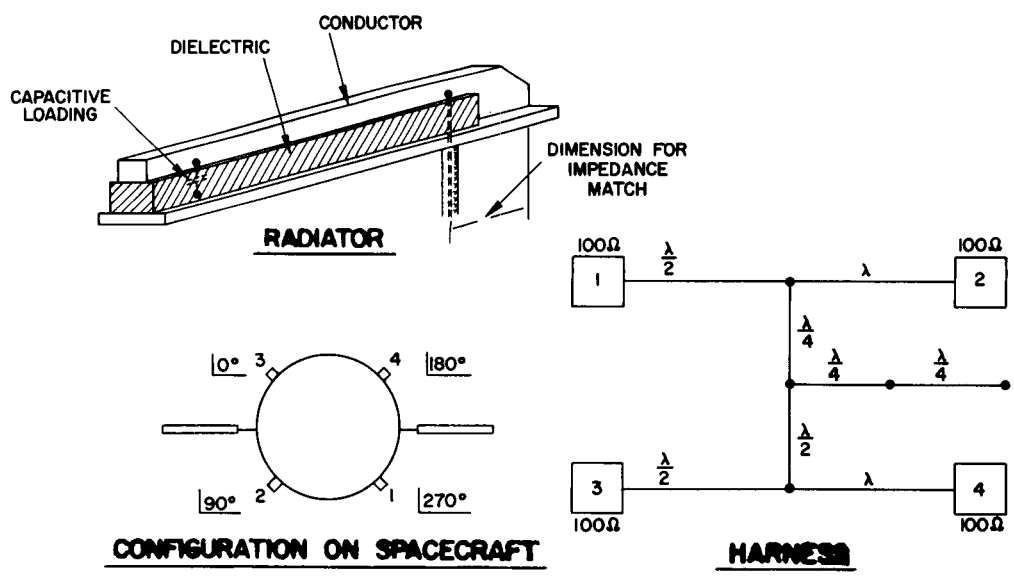

Figure 14—Telemetry and tracking antenna

The E-vector propagates between the two branches of the U and generates a pattern essentially like that of a dipole, the nulls being in the direction of the largest dimension of the loop. Four such elements are arranged around the sensory ring. Phasing of the radiators was experimentally determined and the unconventional phase relationship between the radiators has at present no reasonable explanation. It must be mentioned that the antenna beamwidth is within a very narrow 100 kc band, and the final pattern achieved is not that which was sought. Figure 15 illustrates the patterns measured for these radiators. Two cross-polarized linear receiving elements have been used and the field strength as represented by the signal output has been measured. The procedure was repeated for different solar paddle positions to show the effect of solar paddle rotation. For the case where the paddles are in the axis of symmetry there is a linear wave emitted toward the subsatellite point changing polarity and rotation toward the sides. If the spacecraft is stabilized, a good signal will be received even at 90 degree (and 270 degree) satellite viewing angles.

The same conclusion is reached when the paddles are at 45 degrees. In all three cones the upper half of the pattern is unimportant to the operating and functioning satellite. A circularly polarized receiving antenna suffices for this case. No polarization diversity is needed although the received power will vary approximately 5 db, in addition to the range variation. Suppose the satellite tumbles and the paddles are in an arbitrary position. If they are at 0 degree a -11 db signal variation could be encountered because of the tumbling rate and, in addition, polarization changes from bottom to top will be noticed. The 45 and 90 degree paddle positions show an even more degraded pattern since a null

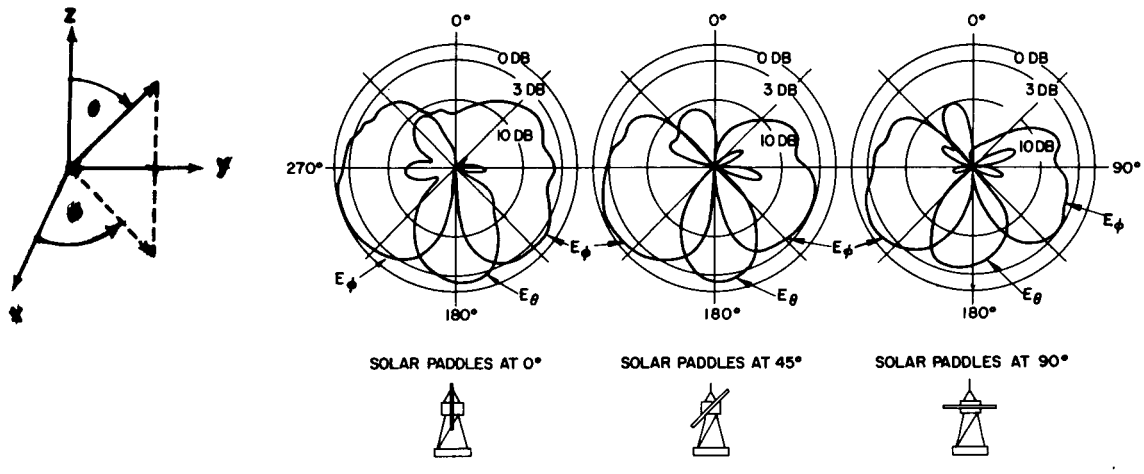

Figure 15—Nimbus telemetry antenna linear polarization components

develops near the top as the angle is increased. As the pattern shows, no energy is emitted by either of the two linear components; thus, no power will be received and a periodic deep fade will be found. The pattern can be considered typical. A large number of patterns have been measured in order to verify repeatability and the influence of the paddles. Because of the symmetrical shape of the spacecraft, with the exception of the paddles, a pattern shape measured in the plane perpendicular to the axis of symmetry is more circular than the three examples shown.

In order to be prepared for the tumbling satellite, receiving antennas must employ polarization diversity, e.g., mutually perpendicular elements and separate receivers for each element. Even so, tumbling would cause deep fades.

Medium Resolution Infrared Radiometer Antenna

The five channel radiometer information is of no value when tumbling occurs and for this reason a certain directivity in the radiator associated with this subsystem is desirable. It is simply a single quadraloop, mounted on the base section (Figure 16). The patterns resemble that of a non-ideal dipole, radiating energy towards earth and space and showing nulls at positions near the patterns' tops. The pattern dependence on solar paddle positions is still present although it is much smaller than for the telemetry antenna. The similarity of patterns between the telemetry and MRIR antennas, and the difficulty which was experienced in changing it by trying different phasing or geometry, permits speculation that the whole spacecraft is the radiator and the elements merely exciters.

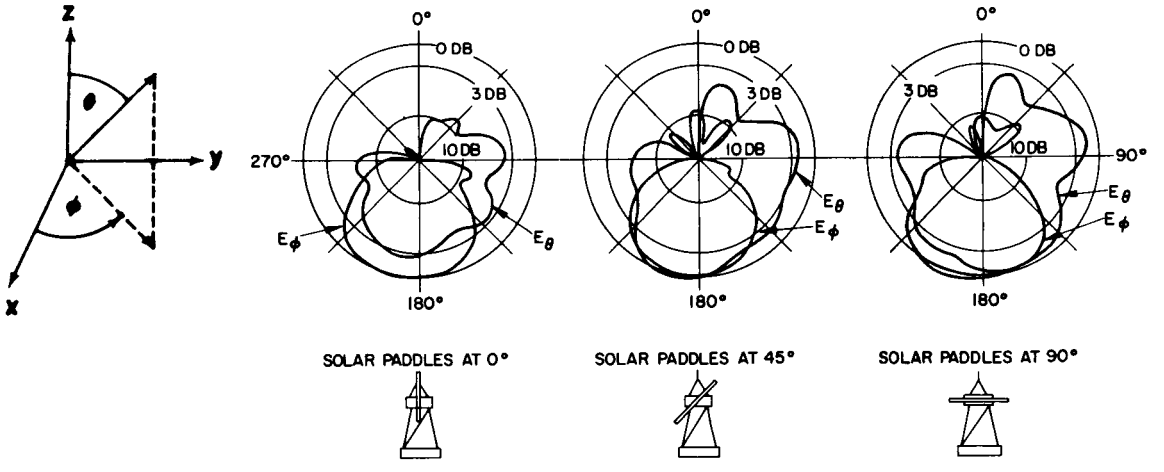

Figure 16—Nimbus MRIR antenna linear polarization components

THE GROUND SYSTEM

A spacecraft, especially one as large and complex as Nimbus, requires large ground communication and data processing systems. Considerations presented up to this point had to take into account certain ground equipment properties. These have been stated when needed. However, the design of the spacecraft system obviously must depend on ground equipment design limitations and it must be influenced by the desired final product. A great deal of thought can be given to what the final product or products in a specific case will be: a weather forecast to the local radio station, or to a ship at sea; a weather chart for the forecasters' use or merely a cloud map; a mosaic of pictures, compatible with standard map projections; nonrectified versions of terrestial cloud cover and features; etc. Similar to the fine distinction which lies between data processing and data analysis is the problem of data presentation as distinguished from data utilization.

Data acquisition and presentation strongly influence the system design and in most projects are made part of the spacecraft system. These and other considerations lead to the conclusion that standard film is the end product for pictorial data and digital computer tape for data serving further research. Pictorial data is applicable for TV and HRIR cloud cover; tape data for experiments telemetering through PCM and for the 5-channel radiation experiment. It has been mentioned before that complete orbital coverage is obtained only if a station is located at the North or South Pole; more than one station is needed for locations anywhere nearer the equator. Only one station has been selected for the Nimbus satellite program. This is, of course, the ground station near Fairbanks, Alaska, and it alone will be used for the initial Nimbus spacecraft.

Antenna and Receivers

The 85 foot parabolic reflector at the ground station near Fairbanks, Alaska, contains separate cross-polarized linear feeds for the 136 and 1700 Mc bands, (Figure 17). Pointing of the antenna requires movement around two axes which for mechanical reasons have been chosen to lie in the horizontal plane. Such a drive system is called an X-Y mount in contrast to two axes driving azimuth and elevation respectively. Manual operation of such a narrow-beam antenna is impracticable, so automatic tracking modes will be provided. The antenna can be operated in three possible modes: (1) it can be driven by a tape recorder where azimuth and elevation data are stored as a function of time; (2) it can autotrack on 136 Mc; and (3) it can be operated in autotrack on 1700 Mc. To fully appreciate the pointing problem of such a large antenna, it is interesting to note that the beamwidths derived from the antenna gains are 0.6 degree for S-band and 6 degrees for VHF.

A typical pass will involve the following steps: (1) Computer predictions for time and azimuth will be made by the computing center and communicated to the station, taking into

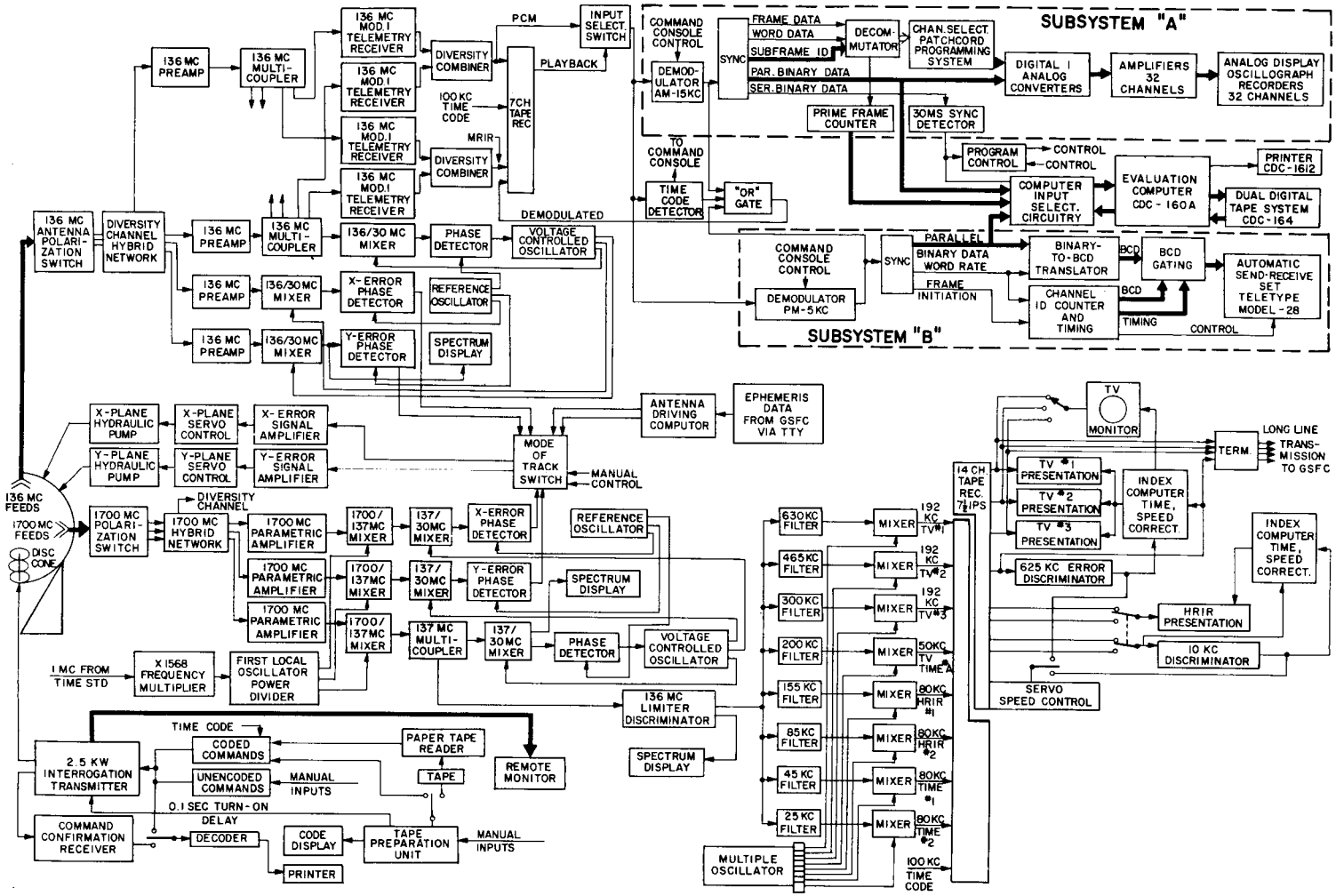

Figure 17—Nimbus ground system

account the minimum elevation possible, at that particular azimuth angle, because of horizon obstructions; (2) A paper tape will drive the antenna at the programmed time; (3) Acquisition of the tracking signal will be visually displayed and an operator can operate the mode of track switch to autotrack when the signal strength is sufficiently high; (4) When the S-band transmitter is turned on by the command system (radiated through a stack of disc-cones attached to the 85 foot antenna), autotrack can be switched to S-band again, if the visual display indicates sufficient field strength for that mode of operation. The conventional monopulse system is used for tracking on both frequencies. After conversion of the 1700 Mc signal to 137 Mc and, further, to 30 Mc, phase detector comparators use a reference and generate separate X and Y error signals for antenna drive.

The 136 Mc reception uses the same conversion system but separate equipment. Note that separate parametric low-noise preamplifiers are used for the S-band vertical and horizontal antennas. Receiver design was purposely made rather universal because of the desirability of using antennas and receivers for satellites other than Nimbus and at ground stations other than Fairbanks, Alaska. The two S-band preamplifier outputs are combined so that a circularly polarized wave is received, then converted to 137 Mc, and fed to the multicoupler and discriminator. More than one frequency can be tuned for in this arrangement. The choice of more than one IF amplifier is available, although Nimbus uses only a 3 Mc bandwidth. The frequency discriminator feeds to a video low pass filter at approximately 800 kc roll off.

The VHF receivers are designed for the 136-137 Mc Minitrack telemetry band which is used throughout the Minitrack network spreading from Alaska to Chile and in South Africa and Australia. Conventional low noise preamplifiers, one for each feed, drive a monopulse system. The horizontal and vertical signals are then fed to IF amplifiers which can be selected in the 30, 60, 100, or 300 kc range as desired. Nimbus uses 100 kc bandwidth for telemetry and a separate 100 kc IF receiver for reception of MRIR signals. The choice of an AM or FM detector can be made for each frequency. Nimbus will have its output connected to the AM detector for the first frequency and to the FM discriminator for the latter frequency. Diversity combiners, though required for telemetry reception only, select the stronger of the two mutually perpendicular signals which are used for both 136 Mc frequencies.

Command Console

Communication with the satellite is established through the command system (Figure 17). A series of encoded commands is prepared by pushing a keyboard and punching the code on a paper tape. Every command is visually displayed and entered on the tape separately. When the preparation is complete the tape can be rewound and fed into a tape reader which may serve as a permanent printed record. The command sequence is then ready for transmission. This can be accomplished manually by feeding the tape-derived

signals to the transmitter modulator or it can be initiated automatically by the station clock. Provision is made to connect the keyboard to the transmitter by processing the tape so that operator control of the satellite can be assumed. Tone frequencies transmitted at desired times by operator-controlled switches are unencoded commands. A crystal detector located near the transmitting antenna feeds its output to the aforementioned tape reader; thus a record of the actual signal transmitted is printed in the proper time sequence. Visual comparison is used to determine whether errors occur. Multiple use of the display units is made by utilizing them to record the difference between satellite time and station time according to the synchronized WWV absolute time reference maintained at the station.

Telemetry Presentation

Reception of telemetry at the station is combined with a certain amount of data processing, since errors in data processing are least likely to occur at this point. Transportation of records for analysis in laboratories is impractical where spacecraft attitude information, control system functions, the state of the spacecraft power supply, and spacecraft temperatures are being sampled by the telemetry system. Because of the need for this essential information in real time, and from orbit to orbit, decommutation, display, printout equipment, and receivers are provided at the data acquisition site. In addition, a computer is provided to analyze the data gathered from the spacecraft.

The receiver output signal is fed to the three demodulators which are compatible to the subcarrier oscillators. Satellite time is fed to the command console for comparison with the station time. "B" telemetry is fed to a sync detector which establishes the presence of a signal and of bit sync making use of the trailing and leading edge of the sync pulse. Since the S/N ratio is good, as we have found by analysis, sync acquisition is good. When sync is acquired a decommutator is synchronized so that individual channel signals can be analyzed if so desired. For most cases the serial code will be converted by a code converter and read out into a tape puncher to be a permanent record. The tape in turn can be fed to a conventional electric teleprinter to display its channel number and measurement value. This small, simple, minimum telemetry capability strongly guides channel assignments in the spacecraft, because of the high reliability inherent in simple automatic equipment. If desired the tape can be transmitted to a control center for further analysis. As will be apparent later a second means for storage and display is available. This one employs components of the "A" telemeter.

The 15 kc demodulator output of the "A" telemetry drives a sync detector for frame sync and bit sync detection. The decommutator separates all channels including subcommutation words. It is equipped with a patchboard programmer allowing selection of individual channels. The serial pulse train is suppressed by a squelch until the first frame sync is acquired so that channel identification is positive. Each word is stored in a seven-bit shift register which is emptied in parallel into a CDC 160-A computer. A magnetic

tape storage unit operates in conjunction with the CDC 160-A computer storing each word in standard digital tape format. The computer inserts frame number received and word number in each frame, thus serving a primary filing function. Analysis of individual channels over one orbit is simply achieved, with calibration functions being stored as subroutines.

For many channels the signal stays within limits as long as no failure occurs. Those channels whose limits are important are programmed and specially identified. When the readout is complete, playback of the digital tape can be initiated and an Analex CDC 1612 high speed printer is driven by the CDC 160-A computer. This device prints at a rate of 1000 lines/min. One frame is recorded at 1/30 sec on playback, equivalent to one second in the record mode. There are 6420 frames per orbit with 60 words each. These 385,200 words would need 200 feet of paper from the printer and the operation would take 45 minutes. It is quite evident that realtime printout of all channels is impossible, and, furthermore, it would be impossible to inspect them in realtime. By printing only words which are out of the specified limits the huge quantity of data becomes manageable. For much data a measurement must be correlated with orbital position. This can be accomplished only by knowing the precise time the data was acquired. In order to clarify this statement we will briefly consider a design detail of the satellite tape recorder. The endless tape loop emerges from the cartridge and passes a guide roller, an erase head for ac erase, a record-playback head, and a capstan drive shaft assembly. In this arrangement information is stored as long as possible; as that first recorded approaches the erase head that last recorded leaves the record head. For playback the erase oscillator is turned off and the speed increased thirty times, but the direction of feed is not changed. Consequently at the time of playback initiation the only clean portion of tape lies between the erase and the playback-record heads. Although this portion is played back first it is usually lost during acceleration of the drive system to full playback speed. It was mentioned that an appropriate gear train activates a cam and switch arrangement to reset the whole system to record mode. Actually the tape is slightly shorter than what the switch determines to be one revolution, allowing the clean section of tape to be played back near the end of the playback. Information appearing after this string of zeros appears a second time on the record (i.e., at the beginning and at the end). The time of this clean section is known within a second since the time of transmission of the command to the satellite is controlled. The duration of the clean section is approximately two frames so it can be used to tag the last word preceding it. This time is inserted manually into the CDC 160-A computer and later into the tape unit. Since word numbers and frame numbers are known, the time of each event can be determined by the computer by counting in reverse.

In many instances a selected printout will not be in the best form for data presentation, i.e., the charge-discharge cycle for one whole orbit is best presented in analog form, also certain temperatures need only a gross analog presentation. The patchboard permits selection of up to 32 channels and connection to 32 digital-to-analog converters, the output

of which is fed to a 32-channel galvanometer-type recorder. Since the entire orbit appears highly compressed (although there is less time resolution), correlation of data can be established most rapidly.

Loss of telemetry data must be avoided, particularly losses which are due to equipment breakdown. A duplicate computer digital tape storage device is included in the system and guards against losses which would be caused by long down times in this unit. Furthermore, the analog subcarriers are recorded on one channel of a seven-channel Minicom 107 tape recorder. This affords additional protection against inadvertent loss of data. A second track records the output of the three subcarrier demodulators and a third track records station time as put out by the station clock.

MRIR Data Presentation

In agreement with the principles stated before, a digital tape is the end product from the five channel IR radiation data. Processing time is not a consideration because research depends primarily on ideas rather than time. Activity at the station for this reason is confined to recording the receiver output on one track of the Minicom 107 recorder. Data processing will be performed for the Nimbus project with equipment identical to that being used in the TIROS project. Analog tapes will be mailed to the Goddard Space Flight Center laboratories where the equipment is located (Figure 18). When played back the 15

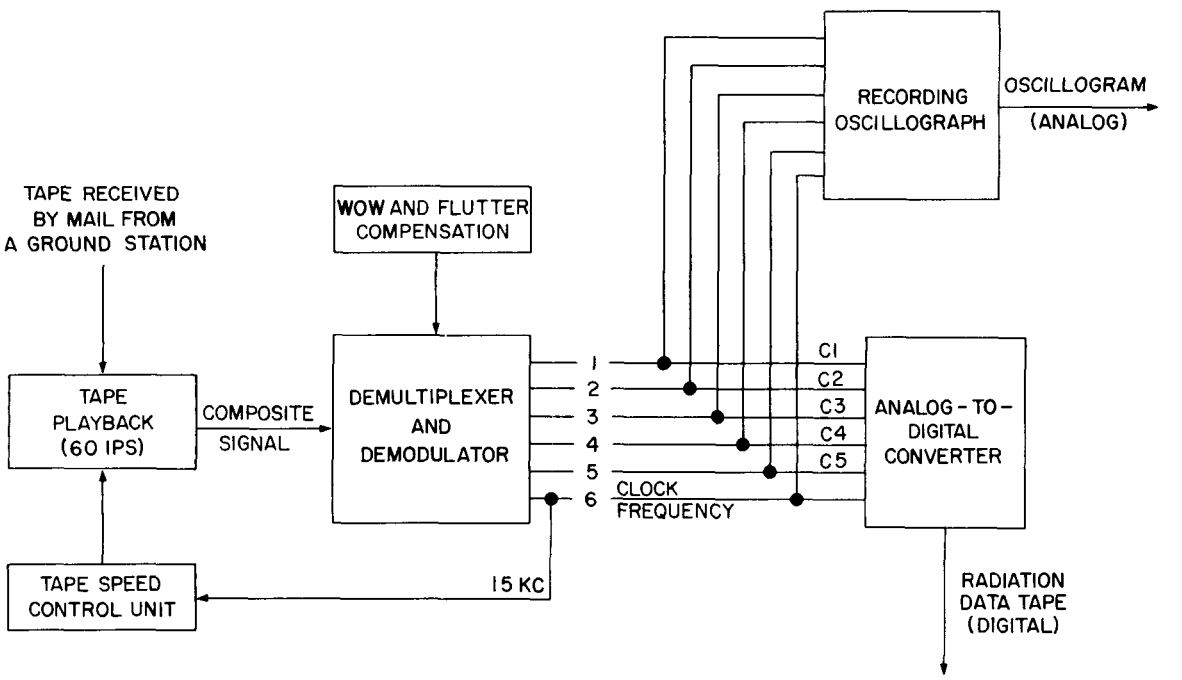

Figure 18—Nimbus MRIR ground system

kc reference channel is frequency-discriminated. This error signal adjusts the Minicom recorder speed so that 15 kc is approximated. The spectrum of channels 1 through 5, i.e., from 3000 to 12,300 cps, is transformed to 53-62.3 kc. Crystal filters demultiplex the signals, feeding five discriminators. A separate discriminator detecting the reference at 65 kc provides the high frequency noise components which are due to fast speed variations in any of the tape recorders in the link, to be subtracted from the data channels. These are added, 180 degrees out of phase, through delay modules to the individual discriminator outputs, reducing this type of noise by approximately 1/3 or 10 db. An analog-to-digital converter and digital tape recorder convert the five analog signals sequentially to binary form. Computers can then perform the final chore of listing radiation levels and the geographical position for each data point. For this purpose, orbital information and attitude information received through documentation from telemetry must be available.

Cloud Cover Presentation Equipment

Scanners

When the subject of data presentation was introduced, the conclusion reached was that pictures will be the end product and film the storage medium. It is desirable to reach this goal with a minimum of intermediate steps. The choice of scanners is essentially limited to an electronic or an electromechanical scanner.

The advantage of the electronic scanner is its very high scanning speed which, naturally, can be as fast as that used for vidicon readout. It needs, however, an intermediary transducer to transform the beam current variations to light by means of the phosphor illuminance which then can be photographed (i.e., an open camera integrates the light spot as it scans through the picture area). Faithful reproduction of a high number of quality gray levels is difficult to obtain by means of the phosphor, although it yields the same quality as the vidicon. Electronic scanners are subject to drift and their scan pattern must be readjusted frequently. Electromechanical scanners such as those used in galvanometer recorders have been in use for more than 40 years; they produce a very stable scan pattern. They need adjustment much less frequently than the electronic scanners – a feature which is important for continuous operation at a near-arctic field station. The dynamic range of light sources converting current variations to light variations is large and very linear. The disadvantage of these facsimile recorders is their relatively slow speed, which is certainly slower than the vidicon readout speed. Each of the two scanners is used in the Nimbus TV system. The kinescope monitor, using the electronic scan principle, will be used for quick-look evaluation and the electromechanical facsimile recorder for high quality reproduction.

Monitor

The composite subcarrier oscillator signal received from the output of the S-band discriminator is fed to a set of filters for demultiplexing. Local oscillators and mixers convert the signal to the doubled value (180 kc) of the original subcarrier oscillator frequency. The three TV signals and the time carrier are recorded on four tracks of a standard fourteen track tape recorder using 1-inch magnetic tape. As the signal is received a monitor can be connected to any one of the three channels. It uses the kinescope technique of converting the electrical signal to light variations on the phosphor of a cathode ray tube, the beam of which is deflected electronically. The light spot is photographed by a movie-type camera. A control unit generates orbit number, date, camera designations (right, center, or left), and time to the nearest second, either automatically or by manual setting, as appropriate. Illuminated numbers are photographed simultaneously with the picture presentation for this purpose. Once the film is exposed a rapid development process permits observation and quick-look analysis shortly after exposure.

Facsimile Presentation

Pictures to serve as masters for further reproduction and for research purposes are generated by using the galvanometer scanning technique. As explained before the maximum speed of the galvanometer is restricted, so bandwidth compression, or time expansion, must be used.

Most standard instrumentation tape recorders are designed for various speeds. The Minicom 114 will be used at a 60 ips record speed and played back at 7.5 ips. Because of the doubler in the satellite playback video bandwidth is 15 kc, whereas playback time is eight times as great as record speed so that 80 minutes are needed for a two orbit playback. The double orbit recording is needed only once a day, so that normally a 5 minute playback will suffice. In view of the 107 minute orbital period, picture reproduction can be accomplished within one period. When played back, the three TV tracks are fed to three discriminators which in turn drive facsimile recorders. These recorders function like mirror-galvanometer recorders. A film moves continuously at the line speed, generating the line advance. A galvanometer carries a mirror reflecting a parallel light beam projected on the film. Constant current through the galvanometer coil will deflect the coil and mirror, and will sweep the light beam across the film. The light bulb used is intensity-modulated, serving as the transducer from current variations to light variations. The properties of the film and those of the light bulb demand a nonlinear intensity characteristic in the electronic drive amplifier for correction. Galvanometer speed can be estimated by assuming that retrace over the film width will be accomplished within the time of two picture elements. It follows that the galvanometer cutoff frequency must be above 3.75 kc.

System characteristics discussed earlier show that speed must be constant to better than 0.1 percent (.01 percent is a desired limit). Since this value will be very difficult to maintain over the proposed 1/2 year of operation, provision was made to apply compensation. Speed variations will be reflected as a frequency variation on the 50 kc timing channel. By discriminating these, an error signal is generated that compensates for speed variation when superimposed on the sweep drive. Naturally a 180 degree inversion is needed. Location of a certain picture or part of a picture geographically is only as accurate as the ±1 degree stabilization accuracy permits. In addition nonlinearities in the optic and in the electronic scanning system degrade the accuracy further. This latter error is compensated by measuring lens distortion and by etching fixed markers on the vidicon face plate. Corrections can then be applied by using prelaunch calibration pictures. The uncertainty of 35 km, generated by the control system, is generally unimportant for meteorology purposes, but the possibility of error determination exists within the limitations of the control horizon sensor. By use of PCM telemetry, deviations can be computed at the ground station or at a different location at a later time. It is interesting to note that the narrow-band time-expanded signal is the most economical for transmission over radio links, whether microwave or scatter propagation techniques are used. A control unit similar to the one used for the monitor generates indexing information for exposure of the film, thus keeping the data log as complete as possible.

HRIR Presentation

Picture reproduction of nighttime cloud cover is accomplished in a manner similar to that used for the TV system. A facsimile recorder and index control unit is used to compute indexing information. Their design is almost identical to the corresponding units in the TV. Since the picture strip is continuous unless interrupted by switching to the second track or by activation of the night-day switch in the satellite, an index will be applied at the beginning of each strip. The presence of the first time code will be used as a trigger signal.

The most important difference between this system and the TV recorder is its ability to correct for errors in the control system. Recall that the rate of change of all three axes of the spacecraft is held to ±0.05 degree/sec which in turn causes 1.6 percent smear per picture element. This error is small and need not be corrected. If we assume that larger errors may exist, because of partial malfunction of equipment, or that future satellites may demand higher resolution, a correction capability becomes desirable; thus its basic elements are included in the recorder. Correction of control errors in the direction of the scan sweep is not necessary because the sync pulses initiate the sweep and the scan rate is much higher than the rate of stabilization. Tape recorder errors are corrected in the same fashion as in the TV system. Adjustment of the film speed is necessary to compensate for the errors of the tape recorder, and the same drive can include errors of the

control system in this axis. In addition injection errors cause a deviation from the desired 90 degree angle between the velocity vector and optical axis. This can be corrected by cocking the galvanometer sweep against the normal film movement. Such adjustment is best performed manually for each orbit and held constant, since the rate of change is measured in the order of days. Control system errors causing the same effect can be corrected in the same fashion, although this must be done continuously. The HRIR scanner does not record a momentary exposure of an entire image but rather the entire vehicle participates in the image generation. Therefore the location of each picture element is only as accurate as the pointing accuracy of the spacecraft, since one degree is much larger than the 2.8×10^{-3} angle of view. The field of view and knowledge of where the elements lie is restricted to this accuracy. The complexity of servo mechanisms does not enhance trouble-free operation in the field, particularly since error correction must be generated by the attitude information stored in the CDC computer, and must be in synchronism with the ground sweep.

The facsimile recorder contains all the servo drives required for real time readout of nighttime cloud cover pictures. However, application of these drives will not be made until further experience is gained with the spacecraft, or it becomes possible to increase resolution of the detecting instruments. A positioning error which was due to the ±1 degree control system error would correspond to ±17.5 km on a world globe; this is acceptable for meteorological analysis as discussed for the TV data presentation. This is especially important since the system design must encompass reliability considerations.

CONCLUSION

This report reflects the status of the Nimbus program through September 1961. The description of the spacecraft pertains to the overall spacecraft system; initial Nimbus satellites will not employ redundant features and will not carry all the subsystems described. Further in the course of development, power and weight figures have changed.

Conservative techniques are employed in the spacecraft system design as a means to obtain the goal of a half year operation in orbit. Careful consideration of mechanical and electrical interfaces permits independent design of the subsystem and its testing. Furthermore, substitution in the subsystems, in part or entirety, or subsystem redesign is possible from satellite to satellite.

The final step in the design and preparation of the Nimbus spacecraft is the subjection of the prototype and flight units to extensive and severe environmental tests and test philosophy.

ACKNOWLEDGMENTS

The development of the concepts of the Nimbus spacecraft has taken place in about two years - August, 1959 being the earliest data from which Nimbus might be identified. The spacecraft and the complex system for the acquisition and utilization of meteorological data and for the study of the physics of the atmosphere, is the product of the thought, knowledge, and inspiration of a great many people, both within the NASA and outside. A number of these were active in laying the groundwork before the writer.

The direct responsibility for the design, development, and execution of the Nimbus project lies with the project manager, Mr. Harry Press, (Mr. W. G. Stroud until August, 1961), and the project working group managers including Mr. E. A. Rothenberg, Launch Vehicle Coordinator, Mr. V. Stelter, Data Acquisition Systems Manager, and Mr. D. Holmes, (United States Weather Bureau), Data Utilization Systems Manager. The author has the pleasure of being Spacecraft Systems Manager for the project. Mr. John Licht, formerly employed by Goddard Space Flight Center, is largely responsible for the structural characteristics of the spacecraft.

REFERENCES

1. Bandeen, W. R., Hanel, R. A., Licht, J., Stampfl, R. A., and Stroud, W. G., "Infrared and Reflected Solar Radiation Measurements from the TIROS II Meteorological Satellite," *J. Geophys. Res.* 66(10):3169-3185, October 1961; also NASA Technical Note D-1096, November 1961.

2. "TIROS I Meteorological Satellite System Final Comprehensive Technical Report," Prepared by Astro-Electronics Division, Defense Electronic Products, Radio Corporation of America, Princeton, N. J., Vol 1, July 1, 1956.

3. Bandeen, W. R., "Earth Oblateness and Relative Sun Motion Considerations in the Determination of an Ideal Orbit for the Nimbus Meteorological Satellite," NASA Technical Note D-1045, July 1961.

4. Mengel, J. T., "Tracking the Earth Satellite, and Data Transmission, by Radio," *Proc. IRE* 44(6):755-760, June 1956.

5. Ko, H. C., "The Distribution of Cosmic Radio Background Radiation," *Proc. IRE* 46(1):208-215, January 1958.

6. Nichols, M. H., and Rauch, L. L., "Radio Telemetry," 2nd ed., New York: John Wiley, 1956.

7. Küfmüller, K., "Die Systemtheorie der Elektrischen Nachrichtenübertragung," 2nd ed., Stuttgart: S. Hirzel, 1952.

8. Baumunk, J. F., and Roth, S. H., "Pictorial Data Transmission from a Space Vehicle," *J. SMPTE* 69(1):27-31, January 1960.

9. Hanel, R. A., and Stroud, W. G., "Infrared Imaging from Satellites," *J. SMPTE* 69(1): 25-26, January 1960.

10. Haas, H. W., and Duncan, R. H., "Quadraloop Antennas," Pt. I. "The Design and Performance of Quadraloop Antennas," Pt. II. "Telemetering Quadraloop Antennas for Project Vanguard," New Mexico College of Agriculture and Mechanic Arts, Physical Science Lab., Report on Contract NONR 2158(01), December 1957.

NASA-Langley, 1963 G-227