UNCLASSIFIED CONFIDENTIAL

Copy
NASA TM X-449

Classification changed to declassifie
effective April 1
authority of NASA
Carroll

AUTHORITY
1. AFSDD-416-DTD 2
2. Memo Parks
Subject
Dtd 2/15

TECHNICAL MEMORANDUM

X-449

EFFECT OF LONGITUDINAL AND LATERAL CONTROLS ON AERODYNAMIC CHARACTERISTICS OF A WINGED REENTRY CONFIGURATION AT A MACH NUMBER OF 1.97 AND ANGLES OF ATTACK UP TO APPROXIMATELY 90°

By Gerald V. Foster

Langley Research Center
Langley Field, Va.

NATIONAL AERONAUTICS AND SPACE ADMINISTRATION
WASHINGTON February 1961

CONFIDENTIAL

UNCLASSIFIED
CONFIDENTIAL

NATIONAL AERONAUTICS AND SPACE ADMINISTRATION

TECHNICAL MEMORANDUM X-449

EFFECT OF LONGITUDINAL AND LATERAL CONTROLS ON AERODYNAMIC CHARACTERISTICS OF A WINGED REENTRY CONFIGURATION AT A MACH NUMBER OF 1.97 AND ANGLES OF ATTACK UP TO APPROXIMATELY 90°*

By Gerald V. Foster

SUMMARY

An investigation has been conducted in the Langley 4- by 4-foot supersonic pressure tunnel to determine the effects of longitudinal and lateral controls on the aerodynamic characteristics of a high-drag reentry configuration at a Mach number of 1.97. The configuration utilized a 73° sweptback clipped delta wing.

The results obtained with leading-edge pitch controls of various sizes indicated a progressive increase in pitch effectiveness as the control size was increased. The use of differentially deflected wing-tip lateral controls indicated that substantial roll effectiveness was available with relatively small changes in pitching moment.

INTRODUCTION

The National Aeronautics and Space Administration is conducting a general research program to provide aerodynamic information through a wide range of Mach numbers upon which winged reentry configuration studies can be based. Results of previous phases of this investigation are presented in references 1 to 3.

A need for additional control studies indicated by reference 1 prompted the present investigation in which the effects of leading-edge pitch controls of varying size and of a wing-tip lateral control were determined for a configuration having 73° sweptback clipped delta wing with a body located on the wing upper surface. The results were obtained

*Title, Unclassified.

CONFIDENTIAL

through an angle-of-attack range from 0° to 90° at a Mach number of 1.97 and are presented herein with only a limited discussion.

SYMBOLS

The results are referred to the body-axis system with the moment reference point located at a longitudinal station corresponding to the 65.7-percent root-chord station. The symbols are defined as follows:

C_N normal-force coefficient, $\frac{\text{Normal force}}{qS}$

C_A axial-force coefficient, $\frac{\text{Axial force}}{qS}$

C_m pitching-moment coefficient, $\frac{\text{Pitching moment}}{qS\bar{c}}$

C_l rolling-moment coefficient, $\frac{\text{Rolling moment}}{qSb}$

q free-stream dynamic pressure

S wing area excluding hinged wing tips

$\bar{c}$ wing mean geometric chord

b wing span

M Mach number

α angle of attack, deg

δ_{l_e} deflection of leading-edge control, positive when deflected up, deg

δ_c deflection of tip control, positive when deflected up, deg

Subscripts:

L left

R right

UNCLASSIFIED

MODEL AND APPARATUS

The model used during these tests consisted of a clipped delta wing and body. Details of these components are shown in figure 1. The wing, constructed of 0.25-inch-thick sheet metal, had rounded leading edges which were swept back 73°. The configuration differed from that of reference 1 in that the body extended to approximately the apex of the wing. Base area of the present body was identical to that of the model in reference 1. Pitch controls were located near the wing apex (fig. 1(b)). Three sizes of controls having control-to-wing area ratios of 0.034, 0.057, and 0.087 were investigated. The large deflectable wing tips shown in figure 1(a) were used only in conjunction with the pitch controls. The deflectable wing tips were replaced with smaller tip controls for the purpose of determining the rolling-moment effectiveness. These controls were located close to the moment center in an effort to minimize pitch trim changes.

The model was mounted in the tunnel by a support system which permitted variation of angle of attack from 0° to 90°. In varying the angle of attack, the model was rotated about a point which was coincident with the balance center. The support system for these tests utilized a sting which was slightly smaller in diameter than that used in the tests reported in reference 1.

TESTS, CORRECTIONS, AND ACCURACY

The tests were made at a Mach number of 1.97, a stagnation temperature of 100° F, and a stagnation pressure of 4 lb/sq in. abs. The Reynolds number, based on the mean geometric chord, was 1.03×10^6. The tests were made through an angle-of-attack range from 0° to 90° at a sideslip angle of 0°.

The angles of attack were corrected for the deflection of the balance and sting under load. The axial-force data presented herein include pressure drag acting on the model base. No attempt was made in this investigation to determine if the model was affected by sting interference at large angles of attack; however, unpublished data obtained with a disk indicate that sting interference on pitching moment was small.

Estimated probable errors in the force and moment data based on 0.5 percent of the static calibration are as follows:

C_N . . . . . ±0.0122
C_A . . . . . ±0.0024

UNCLASSIFIED

C_m	±0.0032
C_l	±0.0006
α, deg	±0.1
M	±0.01

PRESENTATION OF RESULTS

Results of the investigation are presented in the following figures:

	Figure
Comparison of present model with that of reference 1	2
Effect of size of leading-edge control, $\delta_{l_e} = 40^\circ$	3
Effect of leading-edge-control deflection, small leading-edge control	4
Effect of differentially deflected wing-tip controls	5

SUMMARY OF RESULTS

A comparison of the longitudinal aerodynamic characteristics of the model used in the present investigation with the characteristics of the configuration of reference 1 (fig. 2) indicates that although the relatively longer body used in the present investigation resulted in some changes in axial force and pitching moment, the general trend of stability was not significantly affected.

The results obtained with leading-edge controls of various sizes (fig. 3) indicate a progressive increase in pitch effectiveness as the control size is increased. For each control size the effectiveness also increases with increasing angle of attack up to 60°; beyond this angle of attack the effectiveness decreases. The extent to which the effectiveness varies with control deflection is indicated in figure 4 for the smallest leading-edge control only.

The use of differentially deflected wing-tip surfaces as lateral control devices (fig. 5) indicates that substantial roll effectiveness is available with relatively small changes in pitching moment.

Langley Research Center,
National Aeronautics and Space Administration,
Langley Field, Va., November 2, 1960.

UNCLASSIFIED

REFERENCES

1. Foster, Gerald V.: Exploratory Investigation at Mach Number of 2.01 of the Longitudinal Stability and Control Characteristics of a Winged Reentry Configuration. NASA TM X-178, 1959.

2. Spencer, Bernard, Jr.: An Investigation at Subsonic Speeds of Aerodynamic Characteristics at Angles of Attack From -4° to 100° of a Delta-Wing Reentry Configuration Having Folding Wingtip Panels. NASA TM X-288, 1960.

3. Spencer, Bernard, Jr.: High-Subsonic-Speed Investigation of the Static Longitudinal Aerodynamic Characteristics of Several Delta-Wing Configurations for Angles of Attack from 0° to 90°. NASA TM X-168, 1959.

CONFIDENTIAL

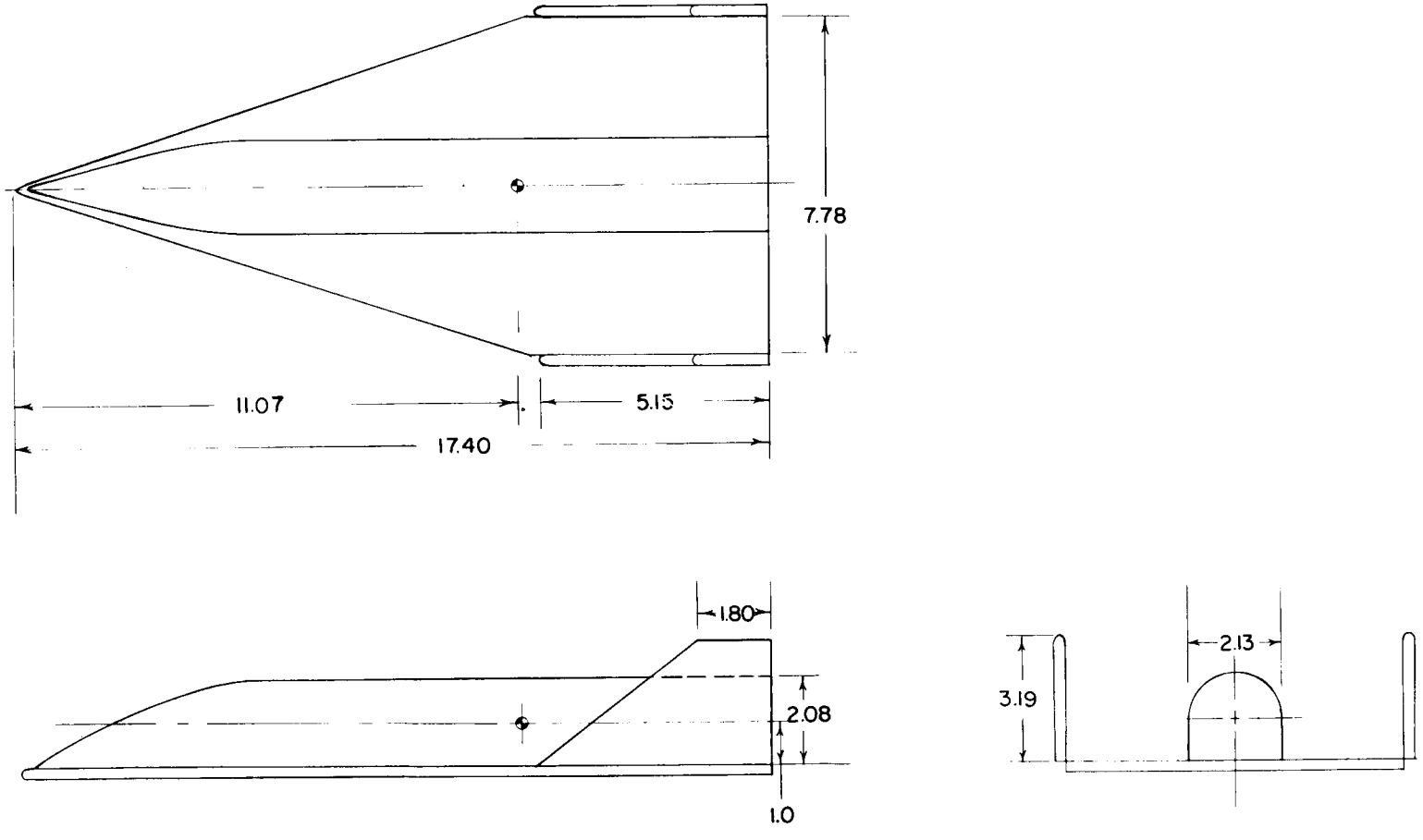

(a) Model with deflectable wing tips.

Figure 1.- Details of model. All dimensions are in inches unless otherwise noted.

CONFIDENTIAL

UNCLASSIFIED

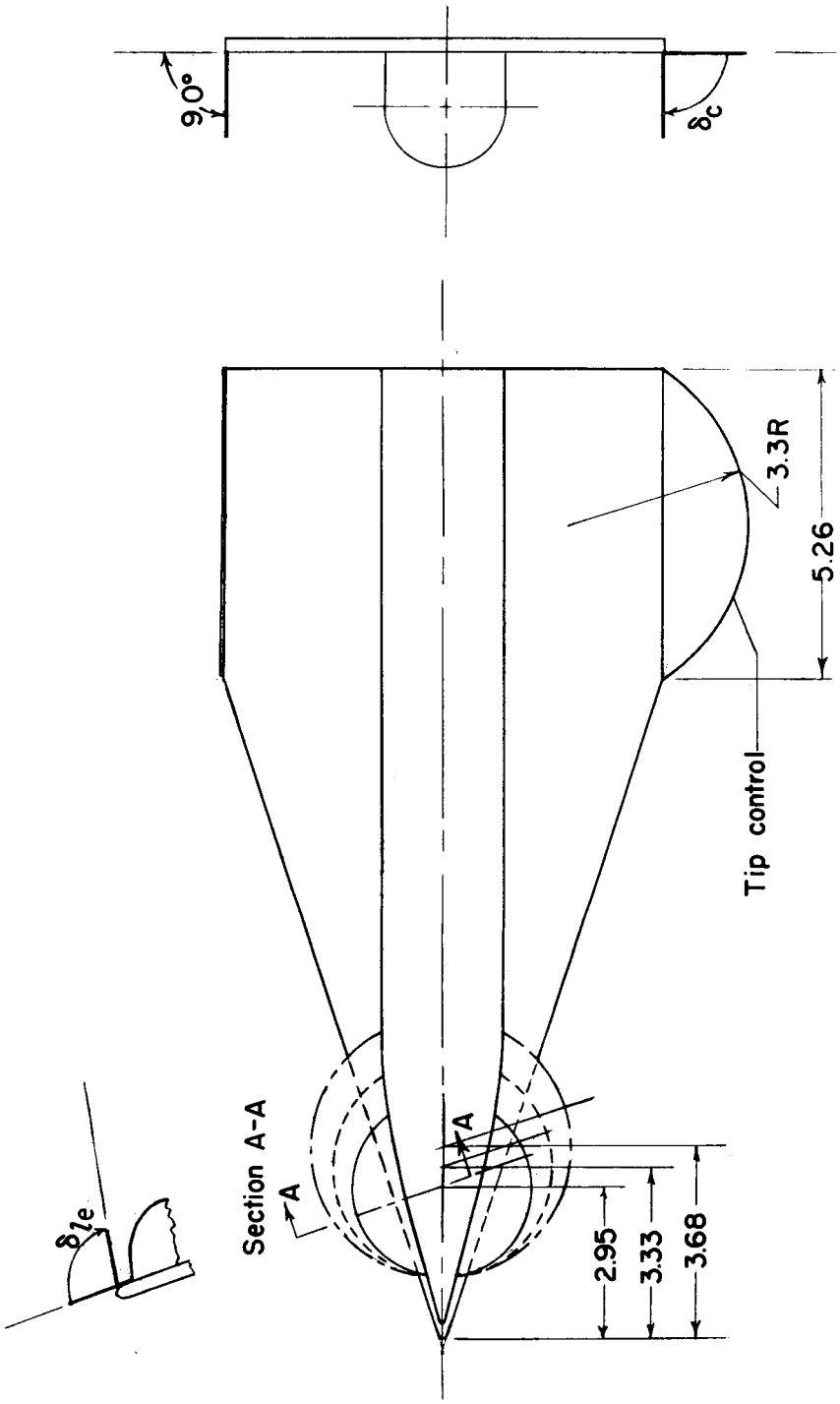

(b) Control details.

Figure 1.- Concluded.

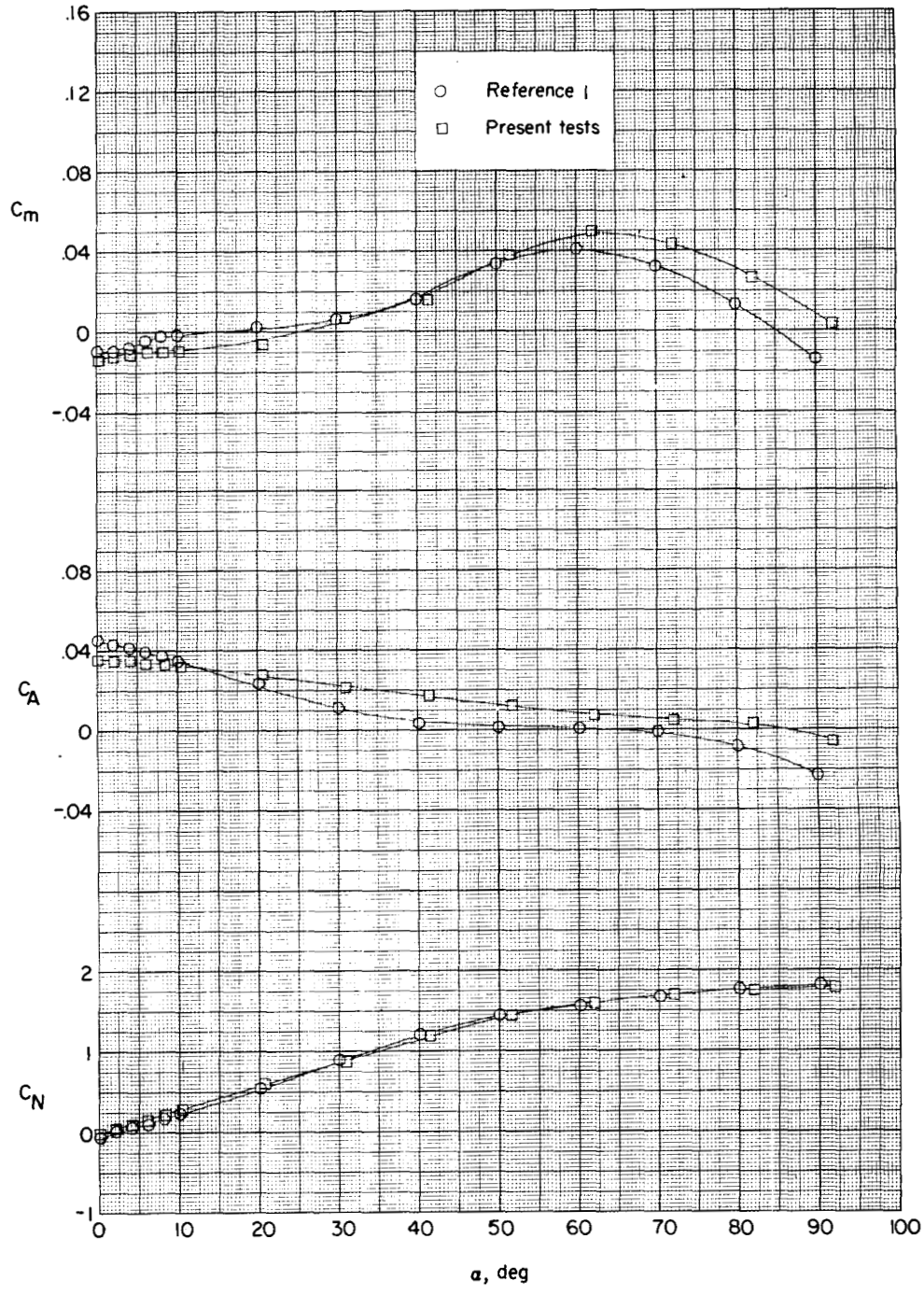

Figure 2.- Comparison of the longitudinal aerodynamic characteristics of model of reference 1 with characteristics of present model. Wing tips deflected 90°.

UNCLASSIFIED

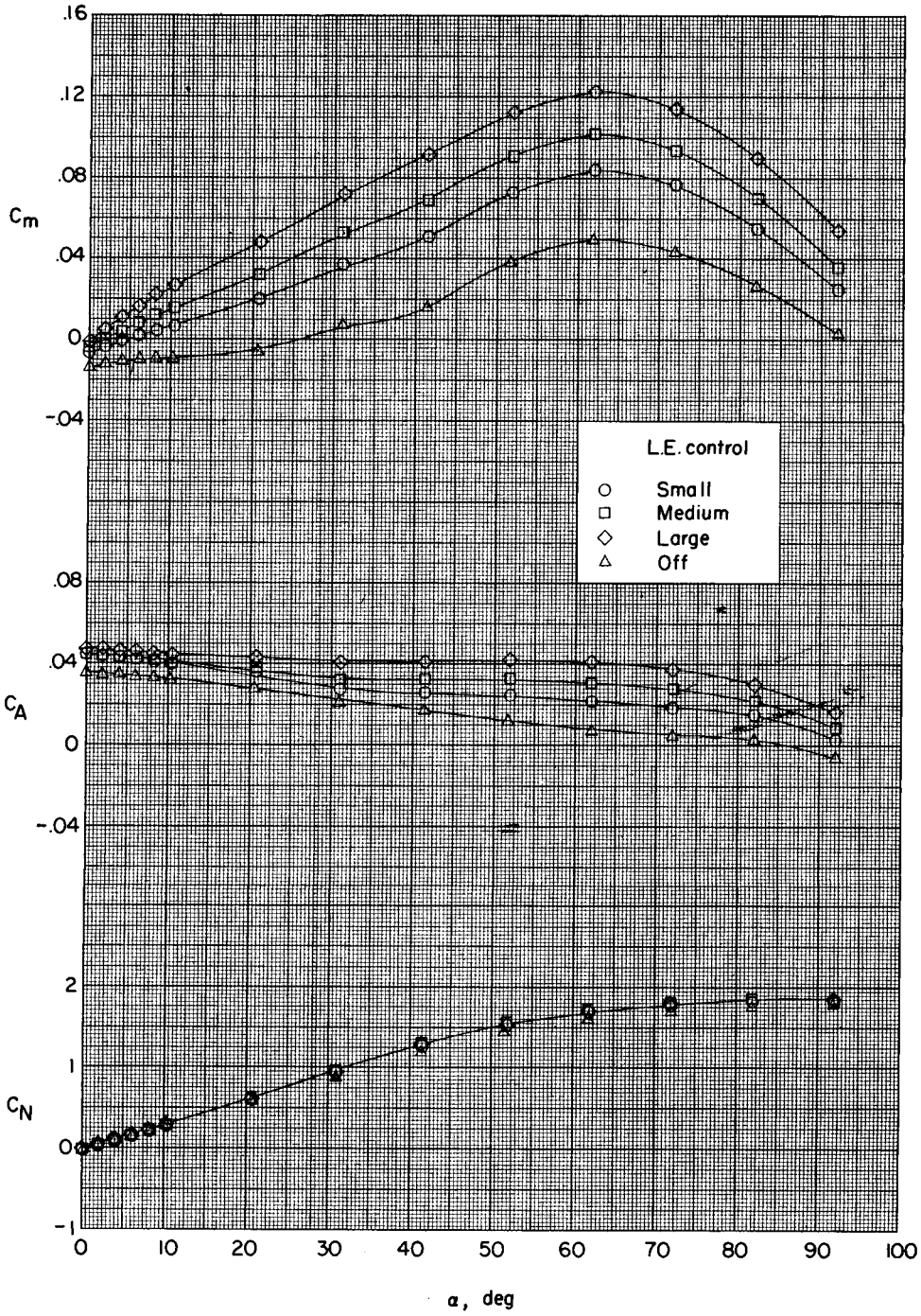

Figure 3.- Effect of various leading-edge controls on the longitudinal aerodynamic characteristics of model with wing tips deflected 90°. $\delta_{l_e} = 40^\circ$.

UNCLASSIFIED

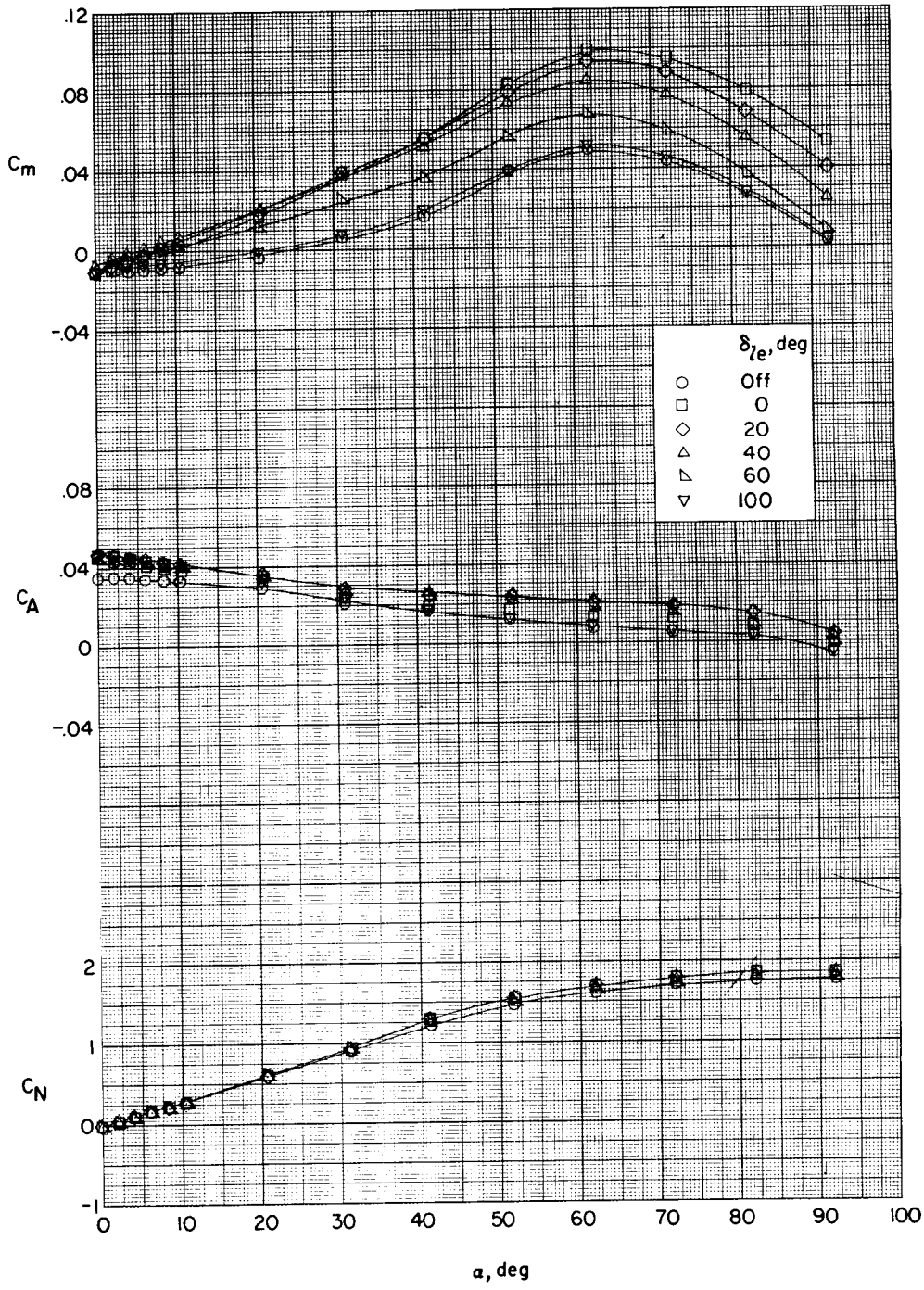

Figure 4.- Effect of leading-edge-control deflection on the longitudinal aerodynamic characteristics of model. Small leading-edge control.

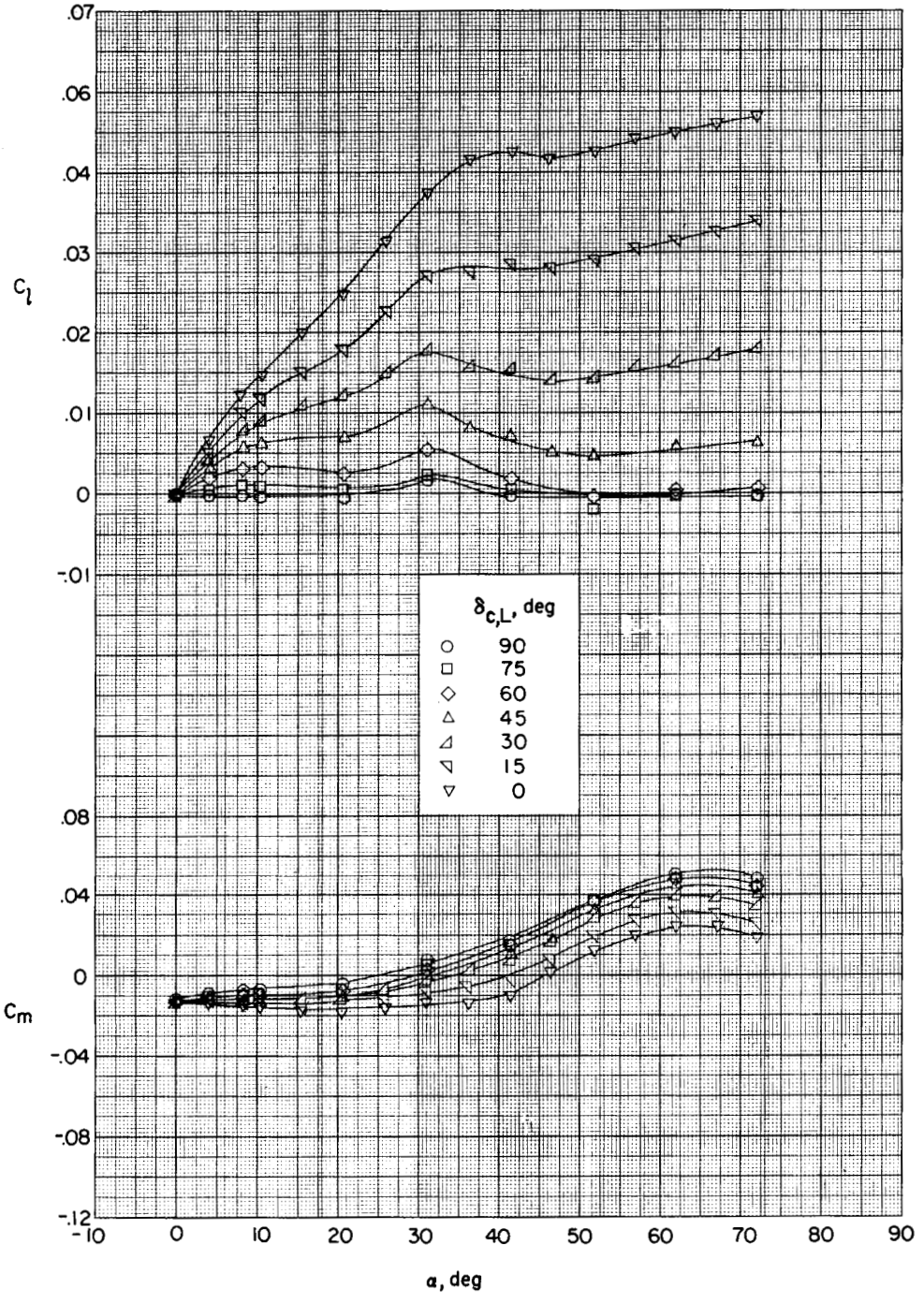

Figure 5.- Effect of differentially deflected wing-tip controls on rolling moment and pitching moment of model. $\delta_{c,R} = 90^{\circ}$.