554407
p24

NASA TN D-1727

NASA TN D-1727

22p.

N63 16989
code-1

TECHNICAL NOTE

D-1727

EXPERIMENTAL EVALUATION OF LIQUID-FLUORINE

SYSTEM COMPONENTS

By Richard L. DeWitt and Harold W. Schmidt

Lewis Research Center
Cleveland, Ohio

NATIONAL AERONAUTICS AND SPACE ADMINISTRATION

WASHINGTON June 1963

NATIONAL AERONAUTICS AND SPACE ADMINISTRATION

TECHNICAL NOTE D-1727

EXPERIMENTAL EVALUATION OF LIQUID-FLUORINE SYSTEM COMPONENTS

By Richard L. DeWitt and Harold W. Schmidt

SUMMARY

A prototype "quick-disconnect" coupling for ground-to-vehicle transfer of liquid fluorine was designed, developed, and successfully tested. Operational features of this hardware include remote positive control of liquid-fluorine flow during the transfer operation, remote connection and separation capabilities, negligible liquid-fluorine spillage upon disconnection of the coupling, and remote reconnection and reuse capability if an abort condition arises after the initial coupling separation has been made. The design proved satisfactory at flow rates up to 2.5 pounds per second and pressure differentials up to 23 pounds per square inch.

One commercially available rotating-vane flowmeter was also tested. Operation of the meter was satisfactory at liquid-fluorine flow rates up to 3.5 pounds per second and pressures up to 60 pounds per square inch absolute. A valve design that employed a soft-seal material at the flow shutoff interface was successfully tested with liquid fluorine at flow rates up to 2 pounds per second and inlet pressues up to 97 pounds per square inch absolute. In support of this valve design a compatibility investigation under dynamic liquid-fluorine conditions was conducted on six soft-seal materials. The materials tested were mainly fluorinated plastics.

INTRODUCTION

The state of the art of handling liquid fluorine is sufficiently advanced for rocket application. To date, thousands of man hours of accident-free research and industrial work with fluorine attest to this fact (ref. 1). If fluorine is to become a propellant for future space vehicles, however, its adaptability to existing launch complexes is important.

The investigation reported herein was undertaken primarily to design, develop, and test prototype flight hardware to be used in systems for the safe ground-to-vehicle transfer of liquid fluorine and secondarily to test the compatibility of liquid fluorine with the materials and fabrication techniques used in construction of the hardware. The prototype hardware consisted of a "quick-disconnect" coupling and a valve, which were designed and fabricated at the Lewis Research Center, and a commercially procured rotating-vane flowmeter.

The design and testing of the quick-disconnect coupling were guided by the following basic criteria:

(1) Remote positive control of liquid-fluorine flow through the coupling

(2) Remote control of connection and separation of the coupling from the launch vehicle

(3) Capabilities for reconnection and reuse of the coupling if an abort condition arises after its initial disconnection

(4) Negligible liquid-fluorine spillage upon disconnection of the coupling

(5) Negligible leakage of the internal valving of the coupling after its separation from the launch vehicle

The major problem in the design and testing of the prototype valve was the selection of suitable soft materials for valve seats and seals. This necessitated a compatibility investigation of several soft materials under liquid-fluorine flow conditions. Because of the results of previous compatibility work (ref. 2), this investigation dealt mainly with fluorinated plastics.

APPARATUS

The test installation consisted of an overall containment vessel, a closed-loop cold flow system, and a destructive testing closet. A phantom drawing of the installation is shown in figure 1.

Containment Vessel

The containment vessel was a spherical steel tank 38 feet in diameter having a 6-foot-diameter entrance, which could be sealed during runs. The sphere was equipped with an exhaust blower, a $1\frac{1}{2}$-foot-diameter valve for purging, and a valved exhaust connection to a charcoal reactor.

Closet

The destructive testing closet, in which all test configurations were run, was a small enclosure with a height of 10 feet, a width of 9 feet, and an average depth of 7 feet. This room served as an initial container for any fluorine spills resulting from a destructive test of the material or component under investigation. Two portholes in the outside wall allowed the experiment to be viewed on closed-circuit television and to be recorded by a motion-picture camera. The closet was also equipped with a nitrogen gas purge and a valved exhaust connection to a charcoal reactor.

Main Flow System

A diagrammatic sketch of the flow system is presented in figure 2. The fluorine system consisted of two 7.9-cubic-foot stainless-steel "battleship"-type tanks submerged in a liquid-nitrogen bath. Each tank had separate capabilities for being filled, pressurized, and vented. The tanks were connected by two separate flow paths; each of these contained flanged removable sections for test purposes. The flow path containing the secondary test section was submerged in liquid nitrogen. The main testing path was exposed to ambient conditions except at its junctions with the battleship tanks. All permanent lines were fabricated by the standard heliarc welding technique. Extensive use of socket brazing was made on joints between valves and flow lines. All welded or brazed connections were X-rayed to ensure good quality and to guard against possible failures. System servicing lines such as fill, pressurizing, vent, purge, and instrumentation lines were copper or stainless-steel tubing. During runs, an electrical safety system was incorporated by wrapping the test configuration in the main test section with wire. If a burnout occurred, the wire would be burned through; its circuit would be broken, valves M-1 and M-2 would close, and the main test section would be isolated from the battleship tanks. All valves in the system were remotely controlled during runs.

Instrumentation

The location of permanent instrumentation is also shown in figure 2. The instrumentation shown was supplemented by additional equipment (see table I) as test configurations in the main test section necessitated. Time histories of all measurements were recorded on a direct-reading oscillograph. Pressures were measured with strain-gage transducers; temperatures were measured with shielded copper-constantan thermocouples. Flow rates were measured with a venturi and a differential pressure transducer.

TEST CONFIGURATIONS

Quick-Disconnect Coupling

A cutaway view of the quick-disconnect coupling in its connected phase is shown in figure 3(a). All component parts of both the ground half and the vehicle half of the coupling are noted. Also, a sequence covering the steps from the disconnected phase, through the mating and locking operation, to the opening of the valving of the coupling is shown in figures 3(b) to (d). During the testing period, all movement of the driver (B) as well as separation and remating of the halves of the coupling were accomplished by means of external pneumatic cylinders and simple lever arrangements.

To commence the connection phase, a rearward movement of the driver (B) relative to the ground-half housing (Q) spreads the locking fingers (C) (fig. 3(b)). Both halves of the coupling are then alined and mated. Finally, a forward movement of the driver arrangement closes the fingers around the vehicle half (fig. 3(c)). To have continued positive contact between the halves, it is

necessary to maintain the driver in this forward position.

The coupling valving is opened by introducing pressurized gas into the chamber (A) of the ground half. The force developed moves the concentric slider ring (O) downstream and raises the ground-half trim (M) from its seat (D). As the ground-half trim continues its movement, it bears against the trim (E) of the vehicle half of the coupling and forces it from its seat (I). Both the ground-half and the vehicle-half loading springs (N and G, respectively) are compressed by the operation, which gives the potential of a positive shutdown in case of a pressurizing gas failure. The coupling open for flow is shown in figure 3(d).

During liquid-fluorine transfer through the coupling, external leakage is prevented by a combination of the static labyrinth grip (formed by the intermeshing faces of the two halves) and the inner and outer V-ring seals (J and L, respectively). Any cryogenic liquid leakage past the inner seal is allowed to gasify in the cavity between the labyrinth faces and the outer V-ring seal. Because of the orientation of the V-ring seals (see fig. 3(a)), any pressure build-up in the cavity could not exceed that of the liquid-fluorine transfer pressure within the flow passage. An excess of the cavity pressure over the transfer pressure would cause leakage in a reverse direction (e.g., back into the fluorine flow passage).

The coupling valving is closed by venting the chamber (A) of the ground half and allowing the loading springs in both halves to seal their respective trims (fig. 3(c)). Separation of the two halves of the coupling is accomplished by a rearward movement of the driver (B) to spread the locking fingers and a final rearward movement of the entire ground half (fig. 3(b)).

Commercial Flowmeter

A 1-inch rotating-vane commercial flowmeter was tested to determine the compatibility and durability of its internal design under exposure to a liquid-fluorine environment. Sapphire ring jewels were used as supports for the stainless-steel rotor.

Soft-Seal Valve

A cutaway of the valve in its open position is shown in figure 4(a); in addition, the sequence of its operation is shown in figures 4(b) to (d). A standard commercial controllable valve actuator and housing were used for the testing. In operation, liquid-fluorine flow was directed over the soft-seal material (B) through the bellows flow passage (C) to the valve housing exhaust port (fig. 4(b)). As the trim group was lowered, the spring-loaded hemispherical plug (D) contacted the inner metal seat (A) and shut off the bulk of fluorine flow (fig. 4(c)). Continued downward movement of the trim group allowed the shutoff cap (E) to contact the soft seal (B) and completely close the valve to fluorine flow (fig. 4(d)). Any of the cryogenic liquid trapped between the shutoff cap and the hemispherical plug was then allowed to gasify. The resulting

fluorine gas gradually vented itself to the downstream side of the valve assembly through the rough seal formed between the hemispherical plug and the inner seat (A). A glass-filled Teflon sample, Fluorogreen E-600, was used as the soft-seal material during flow testing of the valve.

Soft-Seal Test Specimens

Six soft-seal materials were investigated for compatibility with liquid fluorine under dynamic conditions. The trade names and manufacturers of these materials are listed in table II. The exact breakdown as to the type and composition of filler materials and blending agents of the filled Teflon materials is proprietary.

For test purposes the materials were divided into two groups. Group 1 consisted of a nitroso-rubber specimen and two commercial glass-filled Teflon samples, Fluorogreen E-600 and Fluorobrown. In the design of the test specimen retainer, the protection of the soft-seal material as well as the minimization of its exposed surface area were provided for by surrounding the specimen with metal. Both the minimum surface area exposure and the heat dissipating characteristic of the surrounding metal tended to inhibit a combustion reaction (ref. 3). The test specimen configuration, retainer, housing details, and the test system flow diagram for group 1 are shown in figures 5(a) and (b). Group 2 contained bronze-, copper-, and nickel-filled Teflon specimens as well as a plain Teflon control sample. The test specimen configurations and the test system flow diagram for this group are shown in figures 5(c) and (d). In an attempt to determine reaction exposure limits, each of these four materials was used to make seals of three geometric configurations with progressively increasing exposed surface areas. The commercial unfilled Teflon test specimens of all three configurations were used as a standard for comparison. The use of a flange-type housing in the main test section allowed external viewing of the specimen and provided an effective seal between the specimen and the flow line. Parallel test legs were utilized in order to minimize the number of times personnel would be required to enter the closet area.

GENERAL PROCEDURE

To eliminate the possibility of a system failure due to the interaction of fluorine with contaminants, special emphasis was placed on the cleaning technique followed in preparation of all lines and components used for fluorine service. A description of this technique can be found in reference 4. In addition to preassembly cleaning of the components, the procedure included a thorough solvent flush of the completed system. This operation was followed by several cycles of helium gas purging and evacuation to remove remaining volatiles.

During the program, system maintenance consisted of the following:

(1) Periodic helium gas pressure checks to ensure a continued leak-proof condition

(2) Thorough cleaning of all flow components added to the system as well as all test hardware

(3) Strict monitoring and maintenance of torque used on all flange bolts and bolted valve bodies

(4) Maintenance of a slight positive pressure within the system when it was not in use to prevent entrance of moisture or airborne contaminants

Before each series of runs, the system was passivated by introducing fluorine gas at pressures between 20 and 30 pounds per square inch gage and holding this condition for a minimum time of 1/2 hour. This shortened "pickling" technique was based on fluoride film formation work reported in reference 5. Fluorine was loaded by direct transfer from a 5000-pound liquid storage trailer into one of the system tanks immersed in liquid nitrogen. The quantity of fluorine loaded was measured by observing the initial and final pressures of the helium in the tank. After each testing period was completed, the fluorine was pressurized back into the storage trailer. Unrecoverable fluorine was allowed to vaporize in the battleship tanks as the liquid-nitrogen bath was drained and then was vented through a charcoal reactor.

For most of the flow testing of hardware and materials in the destructive testing closet, tank 1 was used as the source tank for liquid fluorine and tank 2 was the receiver (see fig. 2). Standard flow test procedure consisted of first venting both tanks and then making the source tank and the test section common by opening shutoff valve M-1. After the source tank was pressurized, flow control valve M-2 was used to achieve a gradual increase in flow until a desired steady-state value was reached. When the source tank was exhausted, the main test section was isolated from both tanks and was thoroughly purged with helium. Fluorine was then transferred from tank 2 into the source tank through the secondary test section in preparation for the next flow test. Departures from this general procedure for specific test configurations are listed in the following paragraphs.

SPECIAL PROCEDURES

Quick-Disconnect Coupling

Initial flow testing of the quick-disconnect coupling was done with liquid oxygen. Flow was established in the standard manner previously described. The valving of the coupling was then closed, and the halves were unlocked and separated. After the reconnection and locking operations were completed, flow was reestablished by opening the coupling valving.

The procedure used during liquid-fluorine testing differed slightly from that used in the liquid-oxygen runs. After reconnection of the halves and before the valving was reopened, flow control valve M-2 was closed. The coupling valve was then opened, and flow was reestablished by opening M-2. This deviation in procedure allowed a qualitative evaluation of the effect of any frost buildup on the open disconnect faces.

Soft-Seal Valve

All data runs were commenced with the test valve in the open position. After liquid-fluorine flow was established, testing of the seal configuration consisted of completely cycling the valve as though it were a main flow controller between the source and receiver tanks.

Soft-Seal Compatibility Tests (Group 1)

Arrangement of the test section is shown in figure 5(b). The flow receiving unit consisted of a charcoal reactor for immediate disposal of fluorine that had been passed through the test section. Each leg of the main test section was run individually.

RESULTS AND DISCUSSION

Quick-Disconnect Coupling

Results of liquid-oxygen and liquid-fluorine testing are given in table III.

Liquid-oxygen testing. - Initial disconnections of the unit were made at various liquid-oxygen flow rates and source tank pressures up to 2.74 pounds per second and 108.8 pounds per square inch absolute, respectively. Malfunctions of the unit during these tests were confined to those caused by insufficient tolerances existing between the ground-half valve guides and valve stem and also between the sliding driver and ground-half housing surfaces. Valve stem malfunctioning gave rise to oxygen liquid and vapor leakage when the coupling was separated. The operation of the driver mechanism became progressively slower as the coupling cooled during liquid-oxygen flow periods. When complete freezing of the driver to ground-half housing occurred, the locking mechanism was rendered inoperative.

After tolerances had been increased in both trouble areas, a final series of liquid-oxygen runs was made. These tests resulted in satisfactory operation of the locking mechanism; however, erratic operation of the valving in the ground half was again encountered. A final increase in the tolerance between the ground-half valve guides and stem was made preparatory to the liquid-fluorine tests.

Liquid-fluorine testing. - Seven runs were made with liquid fluorine. Three of these included disconnecting the coupling at various flow rates up to 2.5 pounds per second and pressure differentials up to 23 pounds per square inch. In this series of tests the receiver tank pressure was noted to be lower during the steady-state flow after the reconnection than it was during the initial transfer period. This difference should not be misconstrued as an indication of a malfunction of the coupling valving. During the time of the actual disconnection operation, the "transferred" liquid in tank 2 had an opportunity to lose the heat picked up during the initial flow period. After the reconnection and reestablishment of flow, the pressure in the receiver tank remained at the lower value

because of the precooled state of the coupling and lines.

An indication of the external sealing efficiency of the coupling was obtained by recording a time history of pressure buildup in the static labyrinth seal cavity. No pressure rise was measured over the entire series of liquid-fluorine transfers, which indicated that the inner seal was completely effective; in addition, no external leakage was observed at the plane of separation of the coupling during the steady-state flow periods. Escaping fluorine would have been noted because of its characteristic color and because of the formation of an opaque cloud of condensed and frozen moisture in the surrounding air.

By visual monitoring, qualitative information was obtained on how frost buildup on the open faces of the coupling would affect the reconnection and reuse capability of the design. No allowances were made to subject these cold surfaces to conditions other than ambient when the coupling was separated (a controlled condition would employ a method of forming a curtain of inert gas across the exposed labyrinth faces to prevent moisture condensation and freezing). The average time the halves were allowed to remain separated during a disconnect operation was 5 seconds. Inspection of the faces of both halves of the labyrinth seal after completion of the testing revealed no etching or deposits due to the formation of hydrofluoric acid or other fluorides.

Liquid-fluorine spillage upon disconnection was not visually detectable during operations. Also, there was no visible fluorine leakage from either the ground- or vehicle-half valving assemblies while the coupling was separated. During these periods, source and receiver tank pressures were against the ground and vehicle half, respectively.

Results of this series of tests indicate that the operation of the quick-disconnect coupling is satisfactory within the range of imposed test conditions. It is recognized, however, that conditions encountered in actual vehicle launch operations will be more stringent and will require further evaluation of the hardware from several standpoints. Initially, it is recommended that additional work be directed toward (1) evaluating the inhibiting effect on separation of the coupling due to the heavy external moisture condensation and freezing resulting from extended flow periods and (2) determining the effect of vehicle or launch tower vibrations on the external leakage of the coupling during flow periods. When the results of these conditions have been determined, a more realistic prediction of the performance of the quick-disconnect coupling during an actual launch operation can be made.

Commercial Flowmeter

Three runs were made with a commercial 1-inch rotating-vane flowmeter at liquid-fluorine flow rates and pressures up to 3.52 pounds per second and 60.4 pounds per square inch absolute, respectively (table IV). Operation of the meter was satisfactory over the test period; inspection of the unit after the testing revealed no structural damage or oxidation of the components.

Conf., Spec. Rep. 12, Eng. Experiment Station, Ohio State Univ., June 20, 1960, pp. 183-202.

4. Schmidt, Harold W.: Compatibility of Metals with Liquid Fluorine at High Pressures and Flow Velocities. NACA RM E58D11, 1958.

5. Singleton, Alan H., and Tompkins, James F., Jr.: Compatibility of Liquid Fluorine with Various Metals. Prog. Rep. VIII, Air Products, Inc., Apr. 1961.

TABLE I. - SUPPLEMENTARY INSTRUMENTATION

Test configuration	Supplementary instrumentation
Quick-disconnect coupling	Thermocouple in the ground-half inlet line Labyrinth seal cavity pressure tap
Soft-seal valve	Thermocouple in valve inlet line Valve stem position indicator
Soft-seal specimens	
Group 1	Thermocouple in test section inlet line
Group 2	Thermocouple in test section inlet line Static-pressure measurement at flange assembly inlet

TABLE II. - SOFT-SEAL MATERIALS

Material	Description	Manufacturer
Group 1		
Nitroso rubber	----------	Quartermaster Research and Engineering Command, U.S. Army
Fluorobrown Fluorogreen E-600	High percentage glass-filled Teflon	John L. Doré Co.
Group 2		
Compound F-527	High percentage nickel-filled Teflon	John L. Doré Co.
Compound F-529	High percentage copper-filled Teflon	
Compound F-530	High percentage bronze-filled Teflon	

Soft-Seal Valve

The dynamic test conditions imposed on the valve are presented in table V. The liquid-fluorine flow rates and system pressures for the steady-state flow periods, before and after the valve cycle was performed, are listed for each run. The design was tested at flow rates up to 2.06 pounds per second and a valve inlet pressure of 97.6 pounds per square inch absolute. At the conclusion of the testing, the valve soft-seal material (Fluorogreen) was inspected for signs of erosion or chemical action. No oxidation or erosion of the seal was observed. Because of the satisfactory performance of the materials in group 2 (discussed later) under much more stringent liquid-fluorine flow conditions, no attempt was made to reevaluate specimens of these materials in the valve hardware.

Soft-Seal Test Specimens

Group 1. - Specimens of all three of the materials in group 1 were tested in identical housings. The following qualitative results were obtained by visual examination of the specimens after testing. The nitroso-rubber sample suffered surface decomposition over its shielded area as well as over its exposed annulus. A layer of porous, gumlike parent material covered the entire specimen. Exposure time was 61 seconds. After 178 seconds of exposure, the annulus of the glass-filled Teflon (Fluorobrown) was pitted because of the erosive action of the fluorine. Approximately one-sixth of the specimen was lost in this manner. The Fluorogreen E-600 showed no evidence of deterioration after 53 seconds of exposure. These results were not meant to be conclusive but only to serve as indications of the compatibility of each material with liquid fluorine.

Group 2. - The dynamic conditions imposed on the materials in group 2 are shown in table VI.

A series of runs was made on selected configurations of each material in an attempt to determine its compatibility with liquid fluorine under increasing exposure and flow conditions. Specimens of the three configurations were tested in the order of decreasing inside diameters.

Under visual examination after exposure, neither chemical change nor fiber migration due to erosion was observed. A comparison of the weights of the test samples before and after testing quantitatively confirmed the observation. Since no effect was measured, no conclusion could be made regarding the inhibiting effect on chemical reaction from addition of the metal fillers to the Teflon.

The aforementioned results tentatively indicate that limited application can be made in liquid-fluorine systems of the soft seals tested; however, further testing must be conducted to assure their reliability statistically. Until such testing is completed, it is recommended that the principle of limited exposure of surface area be adhered to as the primary design criterion in employment of these materials.

These limited tests suggest considerable improvement in the purity and quality of the fluorinated plastics over specimens previously tested at the

Lewis Research Center (ref. 4). With continued development of application techniques, these materials may prove to be sufficiently reliable and predictable for use in rocket system components subject to a fluorine environment.

SUMMARY OF RESULTS

In an experimental evaluation of several liquid-fluorine flow-system components the following results were obtained:

1. A prototype "quick-disconnect" coupling for ground-to-vehicle transfer of liquid fluorine was designed and tested at various flow rates up to 2.5 pounds per second and pressure differentials up to 23 pounds per square inch. The design of the hardware proved satisfactory under the imposed test conditions. Operational features of this hardware include remote positive control of liquid-fluorine flow during the transfer operation, remote connection and separation capabilities, negligible liquid-fluorine spillage upon disconnection of the coupling, and remote reconnection and reuse capability in case of an abort after the initial coupling separation has been made.

2. The operation of a commercially available rotating-vane flowmeter with sapphire ring jewel rotor supports was satisfactory at liquid-fluorine flow rates up to 3.52 pounds per second and pressures of 60.4 pounds per square inch absolute.

3. A valve configuration employing a soft-seal material at the flow shutoff interface was designed, tested, and found acceptable up to liquid-fluorine flow rates of 2.06 pounds per second and valve inlet pressures of 97.6 pounds per square inch absolute.

4. Limited application of the soft-seal materials tested can be made in liquid-fluorine flow lines provided that reliability can be assured statistically from further tests and if the material is shielded and a minimum of surface area is exposed.

Lewis Research Center
National Aeronautics and Space Administration
Cleveland, Ohio, March 27, 1963

REFERENCES

1. Bergaust, Erik, and Neumark, Hans R.: Fluorine and Advanced Rocket Propulsion. Missiles & Space, vol. 7, no. 7, July 1961, pp. 18-21.

2. Price, Harold G., Jr., and Douglass, Howard W.: Nonmetallic Material Compatibility with Liquid Fluorine. NACA RM E57G18, 1957.

3. Schmidt, Harold W., and Rothenberg, Edward A.: Some Problems in Using Fluorine in Rocket Systems. Proc. Propellant, Thermodynamics and Handling

TABLE III. - TEST HISTORY OF QUICK-DISCONNECT COUPLING

Run	Condition (steady state)	Pressure in tank 1, lb/sq in. abs	Flow rate, lb/sec	Pressure in tank 2, lb/sq in. abs	Quantity flowed, lb	Remarks
			Initial liquid-oxygen testing			
1		29.0	0.91	14.3	160	Compatibility run. Disconnect coupling not separated.
2	Before disconnection After reconnection	37.1 37.1	1.14 1.14	14.3 14.3		A quick initial separation and oxygen vapor cloud released upon opening locking finger mechanism.
3						Steady-state flow before disconnection achieved. Finger lock mechanism opened partially and then froze. No complete disconnection made. The force operating the locking device was increased.
4	Before disconnection After reconnection	86.0 86.0	2.37 2.49	14.3 14.3		A quick initial separation and oxygen vapor cloud released upon opening finger locks. Steady stream of vapor leaking by ground-half valve.
5	Before disconnection After reconnection	98.9 98.9	2.56 2.54	17.6 17.6		Same as run 4. Locking mechanism operating slower.
6	Before disconnection After first reconnection and before second disconnection After second reconnection	108.8 108.8 108.8	2.74 2.70 2.59	22.6 22.6 22.6		When halves of coupling were separated, the vapor leakage flow rate was considerably increased over that in run 4.
7						Steady-state flow before disconnection achieved. Finger lock mechanism opened and then froze. Leakage flow composed of both gas and liquid. No complete disconnection made.
			Final liquid-oxygen testing			
1		64.4	2.0	26.5	190	Compatibility run. Disconnect coupling not separated.
2	Before disconnection After reconnection	85.4 85.4	2.48 1.28	17.6 20.8		Lower flow rate after reconnection indicated ground-half valve stem was binding in its guides.
3	Before disconnection After reconnection	108.0 108.0	2.59 1.42	21.7 21.1		
4	Before disconnection After reconnection and before second disconnection After second reconnection and before third disconnection After third disconnection	107.4 108.8 108.9 108.9	1.91 1.09 0.31 0.31	22.0 22.0 22.0 22.0		
			Liquid-fluorine testing			
1		29.4	1.58	24.1	115	Compatibility run. Disconnect coupling not separated.
2		36.3	2.09	23.4		Same as run 1.
3		47.2 47.8	2.16 2.50	27.0 26.1		Liquid-fluorine flow stopped by closing the coupling valving.
4		57.0 57.3	2.75 2.75	24.1 23.4		Same as run 3.
5	Before disconnection After reconnection	38.7 37.0	1.94 2.01	25.7 20.6		
6	Before disconnection After reconnection	36.7 35.7	1.58 2.01	26.3 23.5		
7	Before disconnection After reconnection	57.0 55.4	2.37 2.50	37.1 32.2		

TABLE IV. - TEST CONDITIONS FOR

ROTATING-VANE FLOWMETER

[Quantity flowed per run, 100 lb.]

Run	Flow rate of liquid fluorine, lb/sec	Pressure (at flowmeter inlet), lb/sq in. abs
1	0.95	17.1
2	2.05	34.0
3	3.52	60.4

CS-27479

TABLE V. - SOFT-SEAL VALVE TEST CONDITIONS

[Quantity flowed per run, 104 lb.]

Run	Condition (steady state)	Pressure in tank 1, lb/sq in. abs	Flow rate of liquid fluorine, lb/sec	Pressure (at test specimen), lb/sq in. abs	Pressure in tank 2, lb/sq in. abs	Remarks
1		34.2	0.66	32.7	19.4	Compatibility run. Test valve was not cycled.
2	Before closure of valve	41.2	0.94	38.7	17.8	Valve was closed, held for 6 minutes, and reopened to establish flow.
	After reopening	39.4	0.82	36.5	22.4	
3	Before closure of valve	51.7	1.24	47.0	20.2	
	After reopening	50.6	1.14	47.0	21.0	
4	Before closure of valve	71.9	1.49	65.7	18.3	
	After reopening	70.9	1.49	64.5	19.9	
5	Before closure of valve	104.2	2.06	97.6	20.5	
	After reopening	103.7	2.06	97.6	20.8	

CS-27480

TABLE VI. - TEST CONDITIONS FOR SOFT-SEAL MATERIALS IN GROUP 2

Configuration (a)	Material	Pressure (at test specimen), lb/sq in. abs	Flow rate of liquid fluorine, lb/sec (b)	Reynolds number (at test specimen)	Velocity (at test specimen), ft/sec
3/16-Inch recessed (1.05-Inch I.D.)	Copper Filled Teflon	21.2	0.82	1.09×10^5	2.43
		23.4	1.50	1.98	4.43
		31.3	2.05	2.71	6.05
	Bronze Filled Teflon	19.8	1.50	1.98	4.43
		28.1	2.05	2.72	6.07
		34.5	2.63	3.48	7.77
	Nickel Filled Teflon	17.3	1.08	1.43	3.19
		27.3	2.11	2.80	6.24
		38.1	2.59	3.44	7.66
	Teflon Control	17.5	0.95	1.26	2.81
		31.5	2.00	2.64	5.90
		37.3	2.59	3.42	7.64
3/16-Inch flush (0.82-Inch I.D.)	Teflon Control	17.6	1.05	1.35	3.06
		29.5	2.05	2.64	5.96
		36.8	2.63	3.39	7.65
		46.3	3.24	4.18	9.43
3/16-Inch orifice (0.56-Inch I.D.)	Copper Filled Teflon	22.3	1.05	1.99	6.57
		30.7	1.89	3.61	11.87
		40.2	2.54	4.85	15.96
		49.0	2.94	5.57	18.39
		58.0	3.33	6.29	20.77
	Bronze Filled Teflon	20.6	0.81	1.55	5.09
		32.7	2.11	3.98	13.16
		60.3	3.50	6.65	21.90
	Nickel Filled Teflon	22.4	0.66	1.28	4.19
		32.8	2.05	3.92	12.87
		54.5	3.50	6.72	22.06
	Teflon Control	20.0	1.05	1.98	6.55
		30.6	1.89	3.57	11.78
		41.7	2.74	5.18	17.08
		56.7	3.50	6.64	21.90

CS-27481

[a]Flange assembly inside diameter was 0.82 inch.

[b]Quantity flowed on each run was 100 pounds.

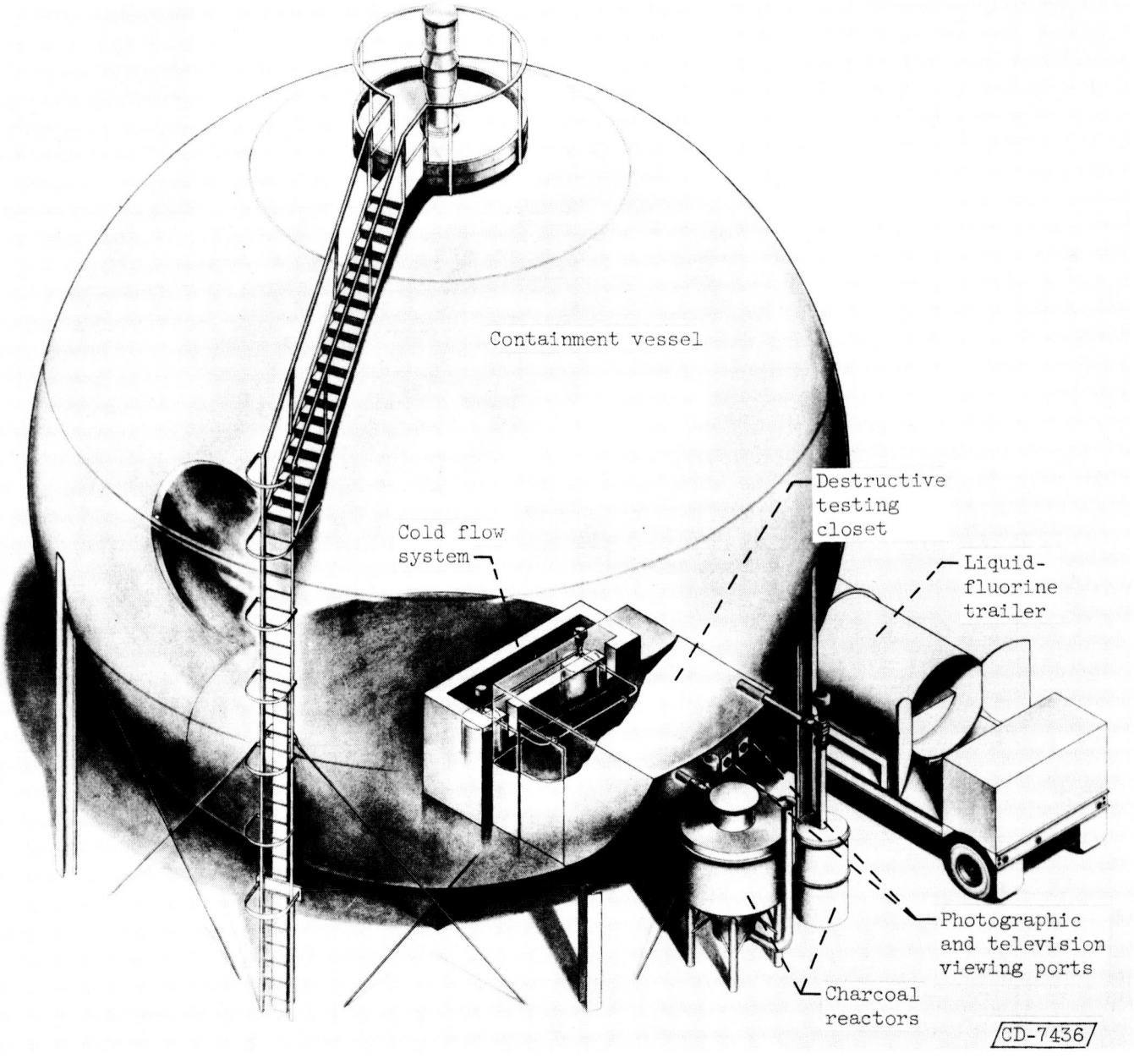

Figure 1. - Test installation.

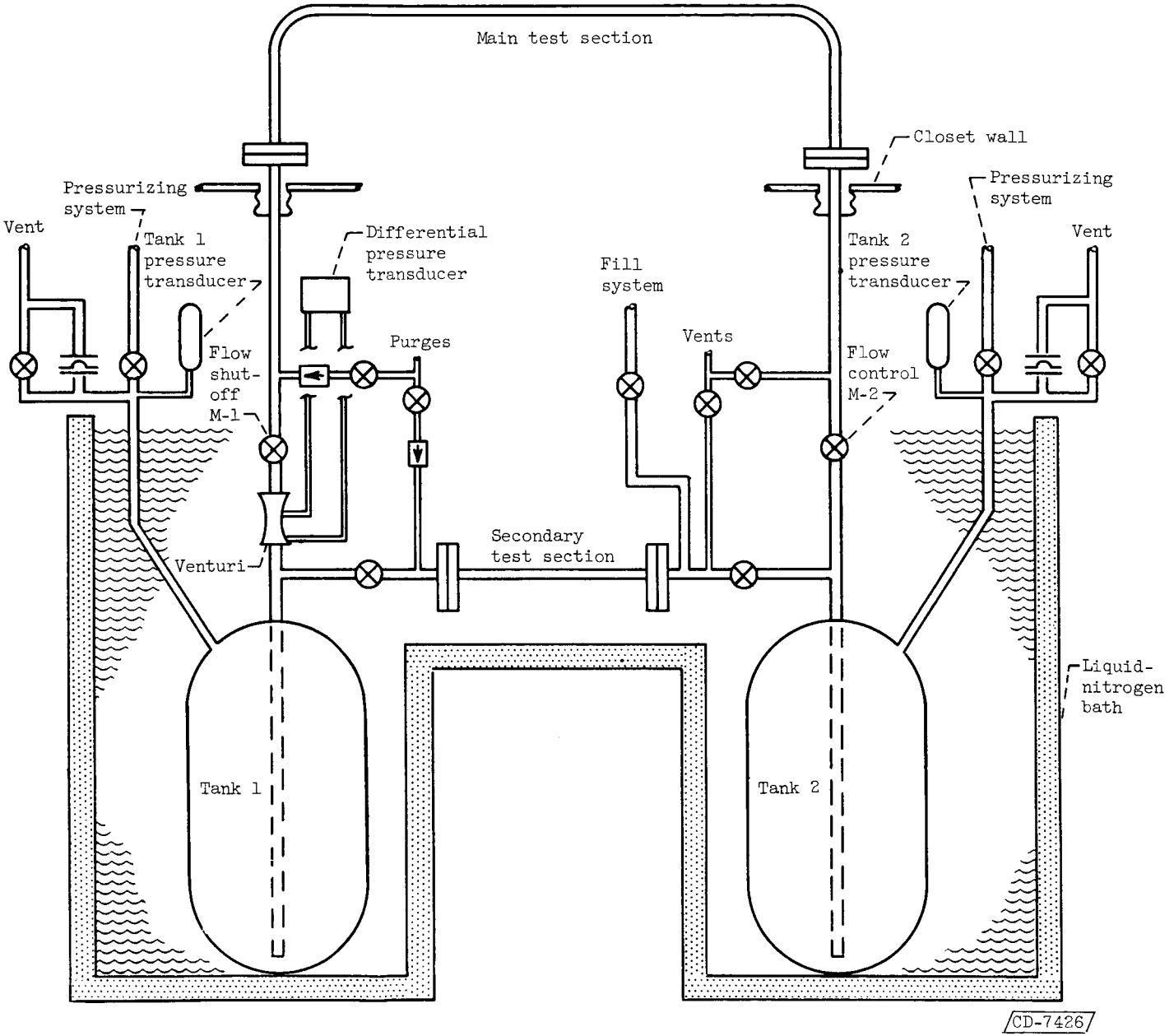

Figure 2. - Schematic of flow system and instrumentation.

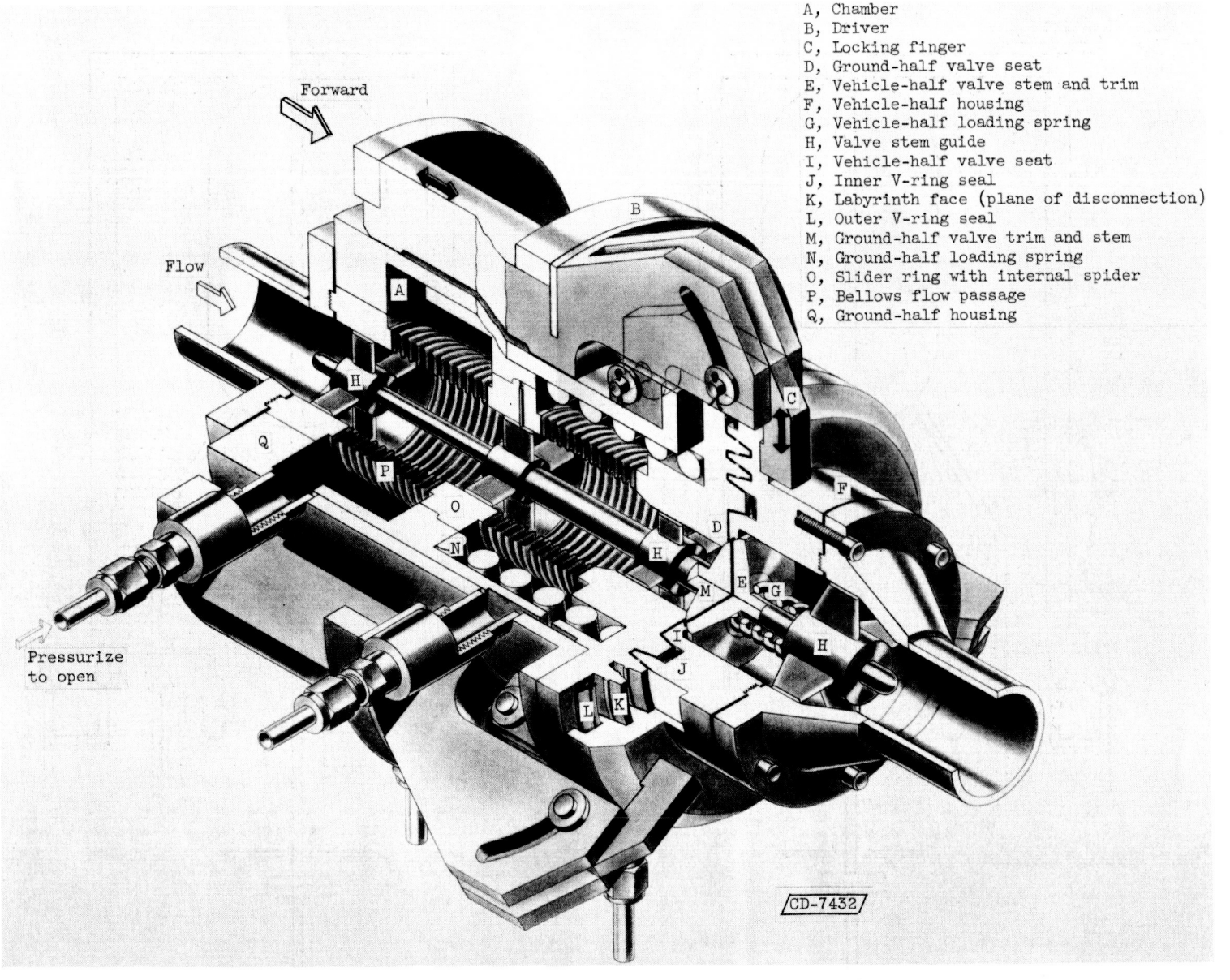

(a) Connected phase.

Figure 3. - Liquid-fluorine quick-disconnect coupling.

A, Chamber
B, Driver
C, Locking finger
D, Ground-half valve seat
E, Vehicle-half valve stem and trim
G, Vehicle-half loading spring
I, Vehicle-half valve seat
J, Inner V-ring seal
L, Outer V-ring seal
M, Ground-half valve trim and stem
N, Ground-half loading spring
O, Slider with internal spider
Q, Ground-half housing

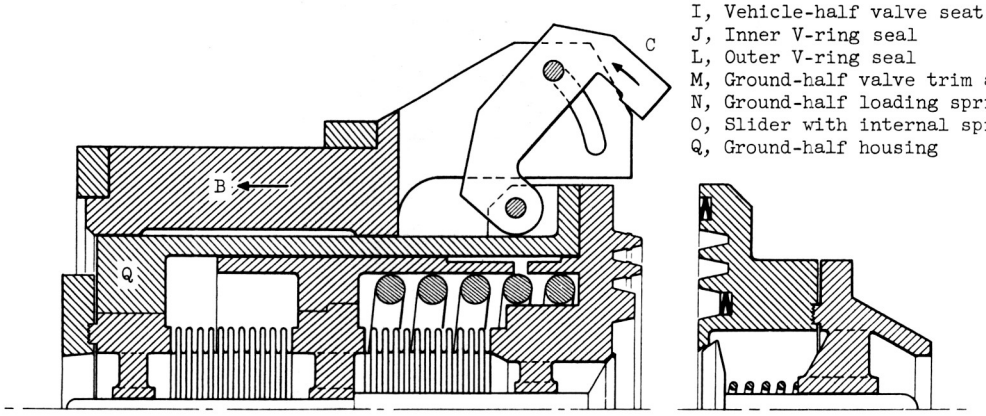

(b) Disconnected phase.

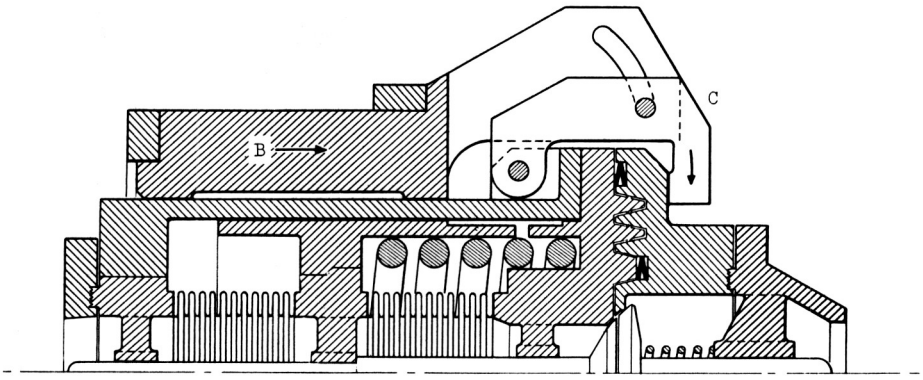

(c) Halves mated and locked.

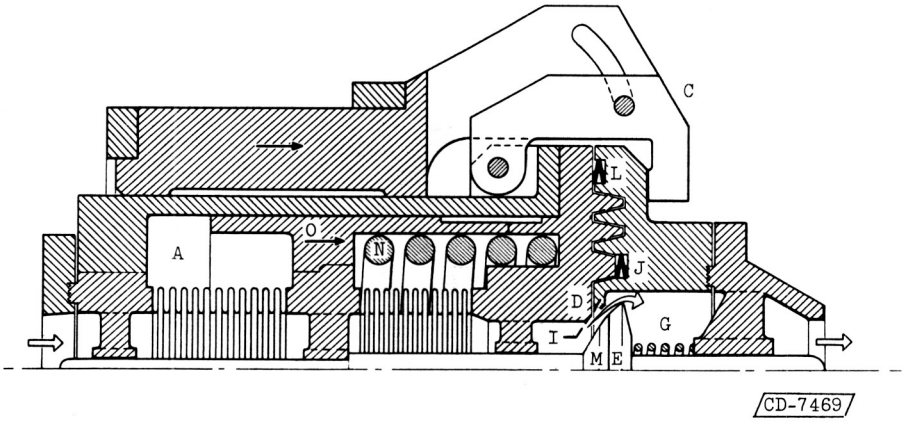

(d) Valving open for flow.

Figure 3. - Concluded. Liquid-fluorine quick-disconnect coupling.

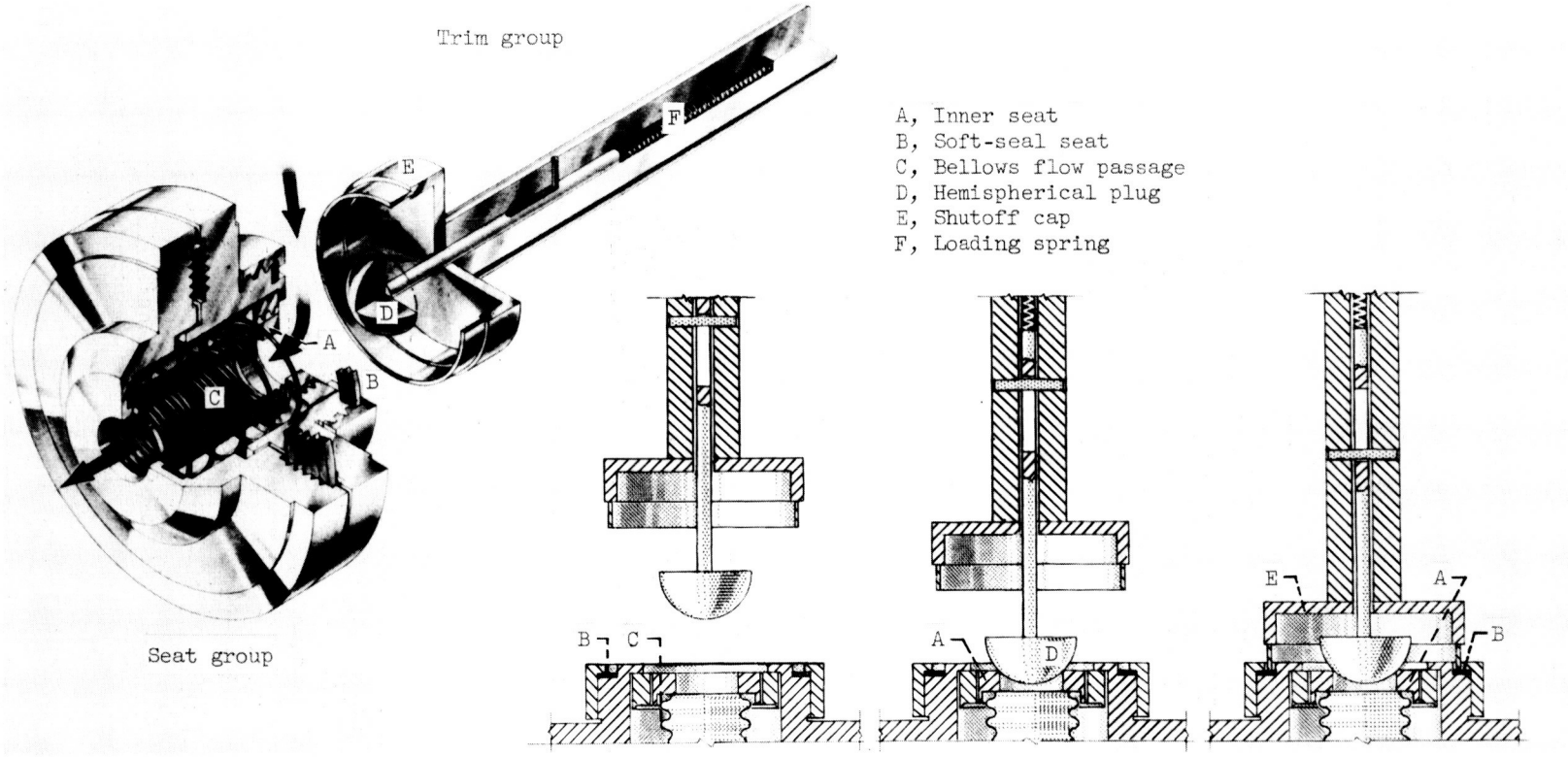

(a) Cutaway of soft-seal valve in open position.

(b) Valve open.

(c) Bulk flow stopped.

(d) Valve closed.

CD-7489

Figure 4. - Soft-seal valve.

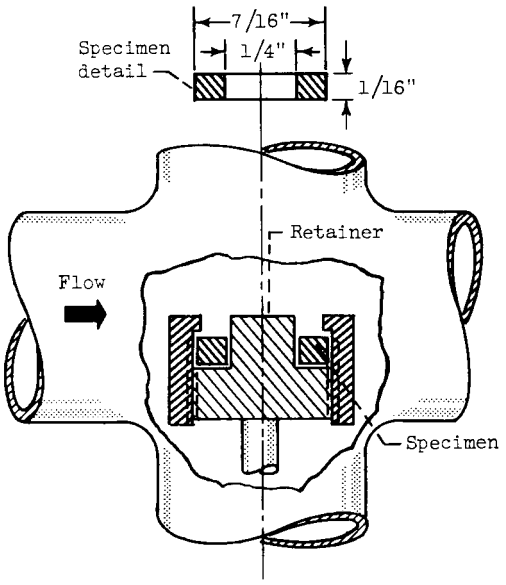

(a) Group 1 specimen, retainer, and housing details.

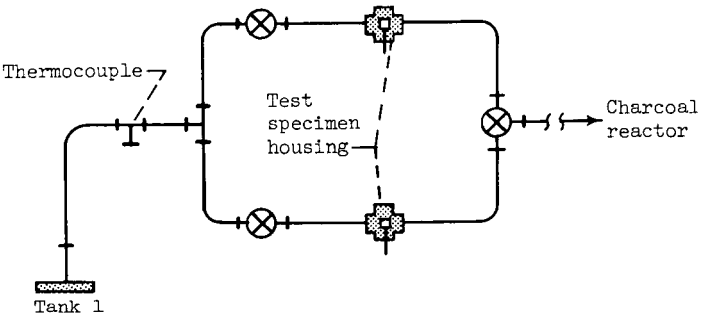

(b) Schematic of test section for group 1 materials.

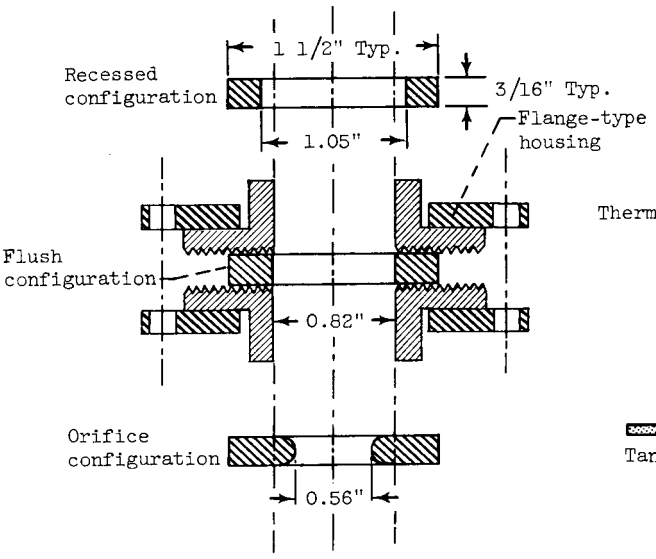

(c) Group 2 specimens and housing details.

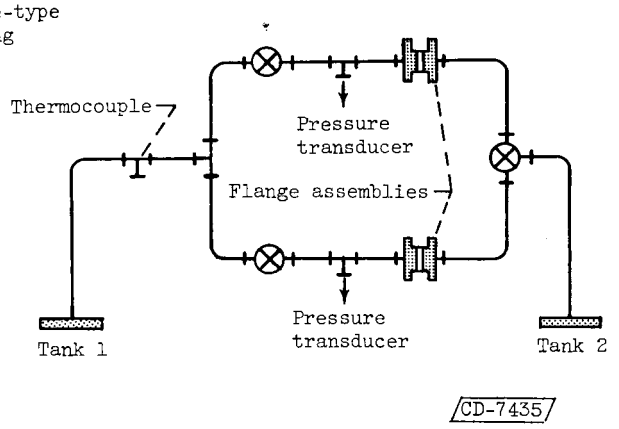

(d) Schematic test section for group 2 seals.

Figure 5. - Soft seals.