RKT 3261

99 p.

N63 18293

Code-1

HIGH RESOLUTION WIND AND WIND SHEAR MEASUREMENT WITH DOPPLER RADAR

FINAL REPORT

Prepared for:
Aeroballistics Division
George C. Marshall Space Flight Center
National Aeronautics and Space Administration
Huntsville, Alabama

By: James E. Jiusto

Contract No. NAS 8 – 1520
CAL Report No. IH – 1525 – P – 1
5 April 1961 to 5 June 1962

CORNELL AERONAUTICAL LABORATORY, INC.
OF CORNELL UNIVERSITY, BUFFALO 21, N. Y.

RKT 3261

S.C. SEP 6 1962

CORNELL AERONAUTICAL LABORATORY, INC.
BUFFALO 21, NEW YORK

HIGH RESOLUTION WIND AND WIND SHEAR MEASUREMENT WITH DOPPLER RADAR

FINAL REPORT

Contract No. NAS 8-1520

CAL Report No. IH-1525-P-1

PREPARED BY: James E. Jiusto

APPROVED BY: Roland J. Pilié, Head
Geophysics Branch

APPROVED BY: James W. Ford, Head
Applied Physics Department

PREPARED FOR:

AEROBALLISTICS DIVISION
GEORGE C. MARSHALL SPACE FLIGHT CENTER
NATIONAL AERONAUTICS AND SPACE ADMINISTRATION
HUNTSVILLE, ALABAMA

RKT 3261

FOREWORD

Where possible in this report, without seriously impeding understanding, brevity is honored; for additional detail the reader is referred to CAL Progress Reports IH-1525-P, 1 through 4. A coherent synopsis of project objectives and major conclusions can be obtained from this document by reading the Introduction (Section I), General Operation of the Wind Measurement System (IIA), and the Summary (V). The reader then may choose to examine those portions of the text proper and appendices that are of particular individual interest.

A project of the scope involved necessarily relies on many people of rather specialized capabilities. The following individuals, in addition to those whose names appear on the cover page, head the list of major contributors to project accomplishments:

Roddy R. Rogers	-	Radar Wind-Measurement Concepts
Anthony J. Chimera	-	Radar Instrumentation
Donald Rhoads	-	Flight Program Supervision
Irving Osofsky	-	Chaff and Smoke Dispenser Instrumentation

Valuable assistance was provided by personnel of the George C. Marshall, Space Flight Center (NASA) in the form of wind data from smoke trails and rockets, analysis of project smoke-trail experiments, and computer programming service. William Vaughan and James Scoggins of NASA served as sponsor project monitors, offering substantial assistance and constructive comment during the course of the investigation.

ABSTRACT

18293

A wind measurement concept was formulated in which two Doppler radars are used to sense the motion of chaff introduced into the atmosphere. Research was performed on the meteorological interpretation of Doppler frequency spectra so obtained and on suitable techniques of measurement of chaff clouds or meteorological targets (clouds, rain, snow). While the radar-chaff concept does not feature the simplicity and economy of more standard wind measurement techniques, it does offer in unique fashion the combined advantages of fine spatial resolution, accuracy, "real time" presentation, wind variability detection, and all-weather performance.

Exploratory field experiments conducted with a single radar of modest performance characteristics established the feasibility of Doppler radar as a device for high resolution wind measurements. The tests served further to help define desired operating features of the ultimate system. Comparative measurements of mean wind velocity were obtained with the Doppler radar, by smoke trail photography, and by standard radiosonde methods.

TABLE OF CONTENTS

	Page
FOREWORD	iii
ABSTRACT	v
LIST OF ILLUSTRATIONS	ix
LIST OF TABLES	xi
I. INTRODUCTION	1
II. SYSTEM CONCEPTS	3
A. GENERAL OPERATION OF THE WIND MEASUREMENT SYSTEM	3
B. TYPES OF WIND MEASUREMENT AND MEASUREMENT PROCEDURES	4
1. Median Doppler Frequency Measure	4
2. Measurement of Wind Variance	8
3. Entire Doppler Spectrum Construction	10
4. Required Sampling Time of the Radar	12
5. Radar Tracking Procedures	15
C. CALCULATION OF THE TOTAL WIND VECTOR FROM RADIAL COMPONENTS	18
D. RADAR REQUIREMENTS	20
1. Recommended Antenna Specifications	21
2. Coherent X-band Transmitter-Receiver	23
E. CHAFF DISPENSING AND QUANTITY REQUIREMENT	25
1. Chaff Concentration Requirements	27
2. Chaff Fall Velocity and Handling Characteristics	29
3. Rocket Chaff Dispenser	32
F. DATA PROCESSING PROCEDURES	32
1. Beam Sharpening	33
2. Data Synthesis	36

TABLE OF CONTENTS (Cont.)

		Page
	G. SYSTEM ERROR ANALYSIS	38
III.	BUFFALO WIND MEASUREMENT EQUIPMENT	41
	A. AIRCRAFT CHAFF DISPENSER AND SMOKE GENERATOR	41
	B. FLIGHT TEST OPERATION	45
	C. DOPPLER RADAR	45
IV.	EXPERIMENTAL DATA	49
	A. BUFFALO WIND MEASUREMENTS	49
	B. MT. WITHINGTON EXPERIMENTS	57
V.	SUMMARY	63
VI.	REFERENCES	65
APPENDIX A -	DESIGN CHARACTERISTICS OF A PULSE DOPPLER RADAR FOR WIND SHEAR MEASUREMENTS	A-1
APPENDIX B -	ERROR ANALYSIS OF THE WIND SHEAR SYSTEM	B-1
APPENDIX C -	RECOMMENDED INVESTIGATION OF ATMOSPHERIC WIND VARIABILITY AND TURBULENCE DETECTION	C-1

LIST OF ILLUSTRATIONS

Figure		Page
1	Illustration of Radar System Operation	5
2	Block Diagram of Median Frequency Sensor	9
3	Median Frequency Determination	9
4	Analog-Filter System	11
5	Gaussian Velocity Spectrum and Twin Filter	13
6	Required Radar Sampling Time as a Function of Frequency Spectrum Width to Obtain Median Velocity Measurements with an Accuracy of 0.5 M/SEC	15
7	Radar Tracking Scheme	17
8	The Radar Geometry	19
9	Vertical Resolution of a Radar Beam as a Function of Distance and Altitude of Observation	22
10	Gated Pulsed-Doppler System	24
11	Block Diagram of Coherent Transmitter/Receiver	26
12	Chaff Fall Velocity vs Altitude (X-band Suchy Chaff, 0.0035" Diameter)	30
13	Foil Chaff Fall Velocity vs Altitude (Revere X-band Chaff, 0.008" x 0.00045")	31
14	Beam Sharpening Concept	35
15	Periodic Wind Profile - Radar Scan	37
16	CAL Chaff Dispenser	43
17	Smoke Generating System	44
18	F8F (G-58B) Airplane	46
19	CAL Doppler Radar	47

LIST OF ILLUSTRATIONS (Cont.)

Figure		Page
20	Smoke Trail (8 Dec. 1961) 60 and 90 Seconds after Initiation of Aircraft Dive	51
21	Sequence of Wind (Chaff) Velocity with CAL Doppler Radar (8 Dec. 1961).	52
22	Wind Velocity Determination from Two Radial Velocity Components Obtained at Different Azimuth Angles (Constant Altitude)	55
23	Doppler Radar Measurements of Wind Velocity	60
24	Doppler Radar Measurements of Wind Velocity	61
B-1	The Error Coefficient $A^2 + B^2$	B-9
B-2	Error Coefficient $\overline{(A^2 + B^2)}$ vs θ Averaged Over all Wind Directions (α)	B-11

LIST OF TABLES

Table		Page
1	Doppler Radar Characteristics	21
2	X-band Chaff Characteristics	28
3	Frequency and Severity of Nonmonotonic Wind Variations Within 60m Height Intervals	34
4	90% Confidence Limits in the Measurement of Radial Components V_r of Wind Velocity	39
5	90% Confidence Limits in Determining the Altitude (h) at Which Component Velocity Measurements Are Made	39
6	90% Confidence Limits in Horizontal Wind Speed Calculated From Measurements of Two Radial Components	40
7	Wind Measurement Experiments - Buffalo, N. Y.	49
8	Comparison of Smoke Trail and Radiosonde Wind Data	50
9	Wind Shear Experiment I - 8 December 1961	53
10	Wind Shear Experiments II and III - 16 December 1961	56
11	Wind Velocity Determinations with Doppler Radar and Chaff - Mt. Withington, New Mexico	58

I. INTRODUCTION

To achieve maximum performance, missile designers have resorted to slender, flexible configurations for modern launch vehicles. Contemporary configurations of this sort are subject to aeroelastic difficulties that are expected to be even more critical with the larger vehicles anticipated in the next generation of boosters. To obtain a realistic evaluation of the structural integrity and control characteristics of a booster, it is necessary to study the complete vehicle and its servo system within its flight environment.

Fluctuations in wind velocity encountered by a missile along its trajectory constitute a prominent environmental source of deflection and a stimulus of vibration. The component of these fluctuations in a direction perpendicular to the trajectory can act in a direct manner by producing aerodynamic forces on the booster, and in an indirect manner by providing abrupt inputs to the vehicle servo system thereby introducing stimulating forces from within.

Booster designers have long recognized the need for statistical information on the wind field that may be encountered by their vehicles so that they may anticipate structural loads and guidance problems. At time of launch, wind field information is required to be certain that design characteristics are not exceeded. Ther performance of space vehicles after launch may be influenced by wind structure aloft, primarily by vertical wind shear - the change in horizontal wind with altitude ($\partial V/\partial z$). The conception and evaluation of a method for providing the necessary wind information was the subject of this program.

Conventional wind sampling techniques were not considered adequate to measure the wind with sufficient spatial resolution, accuracy and rapidity for missile response purposes. Consequently, the Cornell Aeronautical Laboratory was engaged by NASA (Contract No. NAS8-1520) to develop an advanced wind measurement concept employing Doppler radar and chaff tracer. The objective was to formulate a system capable of measuring winds at 30 meter intervals up to an altitude of 15 km, with a probable error accuracy of 1.5 m/sec* and

*While 1.5 m/sec represents the contractual requirement, efforts were aimed at achieving an accuracy of 0.5 m/sec.

within approximately 30 minutes. From such point velocity measurements, wind shear values over desired height increments can be calculated. Allied objectives involved study of the wind-structure interpretations of Doppler frequency spectra and the procurement and analysis of high resolution wind and shear data with a Doppler radar.

An operational system that might evolve from the concept formulation was to be considered for use at Cape Canaveral to provide:

a. Statistical data on the detailed structure of atmospheric motions for establishing structural and control design criteria of space vehicles.

b. Monitorship of wind conditions aloft in support of space vehicle firings.

c. Data for interpretation of post flight space vehicle behavior and test evaluation.*

*Due to increased program emphasis on obtaining wind velocity with a probable error of 0.5 meters per second for a thirty-meter altitude interval, and the project requirements for a relatively complex ground radar installation at Cape Canaveral, the sponsor has abandoned the plan for installation of such an operational system at this time.

II. SYSTEM CONCEPTS

A. GENERAL OPERATION OF THE WIND MEASUREMENT SYSTEM

The conceptual wind measuring system[1] formulated during this program is illustrated in Figure 1. It consists of two Doppler radars that observe the motion of chaff dipoles introduced into the atmosphere via a rocket-borne chaff dispenser. A continuous column of chaff from 15 km to ground is produced during free fall of the chaff dispenser payload. Over the altitude regime involved, chaff responds faithfully to wind motions,[2] these motions giving rise to corresponding frequency shifts of each viewing Doppler radar.

The radars are separated by a distance of approximately 25 km with the chaff targets at varying ranges from the radars of 10 to 50 km. Knowing the range to the reflecting column and the pointing direction of both antennas, information necessary to compute horizontal wind velocity (speed and direction) from radial velocity components is available. The latter triangulation procedure, and overall system accuracy, are improved if the two radars are programmed to scan the same altitude at the same time. Continuity of the chaff column is desired to eliminate tracking confusion and to facilitate automatic operation of the antennas. In addition to providing information on horizontal wind velocity, the spectrum of Doppler frequencies observed can be interpreted so as to provide a measure of turbulence.

The two radars operate at frequencies in the X-band and employ 45 to 60 ft. antennas to achieve fine spatial resolution. The coherent transmitters provide 100 to 200 kw peak power with variable pulse durations of 0.1 to 2.0 microseconds and a pulse repetition frequency of approximately 12,000 per second. A coherent receiver having a crystal mixer front end and using a suitably offset signal from the transmitter master oscillator as the coherent local oscillator signal is used at each site for the wind velocity measurements.

The received signal from the illuminated volume of each radar is treated in three different ways to determine a "median" wind, wind variance, and the complete velocity spectrum. The frequency spectrum at each altitude is

processed in real time to determine the median velocity and the variance, and this information is displayed as well as tabulated for immediate observation by the operator. Wind Shear values for scale heights of interest are calculated from the median velocity vs. altitude data. An analog device (R-meter) is used to detect fluctuations in return signal power and hence provide a measure of wind variability. The complete spectrum, as determined with a frequency filter bank, is recorded on magnetic tape (with simultaneous target position information) for subsequent analysis of turbulence as warranted.

A two-radar concept must assume that vertical air motions of a steady (non-turbulent) nature are insignificant. A third radar would be necessary to construct the three dimensional structure of winds aloft. The added complexity did not appear justified in view of NASA's operational requirement and the fact that large-scale vertical velocities in excess of, say, 0.3 m/sec occur infrequently.[3]

Subsequent sections of Part II of this report will deal with the sampling techniques, data analysis procedures, and equipment performance specifications required to meet the following system capabilities:

a. 30 m altitude sampling intervals to 15 km

b. 0.5 to 1.5 m/sec accuracy in the measurement of wind velocity over the velocity range 0.5 m/sec to 90 m/sec.

c. construction of the entire wind profile within 30 minutes

d. all-weather, day-night measurement

B. TYPES OF WIND MEASUREMENT AND MEASUREMENT PROCEDURES

1. Median Doppler Frequency Measure

As discussed in Progress Report No. 1 (Reference 4), a measure of median Doppler frequency (i.e. of median wind velocity)* is more tractable than a mean frequency measurement both from the standpoint of combining

*The terms median frequency and median velocity will hereafter be used synonomously.

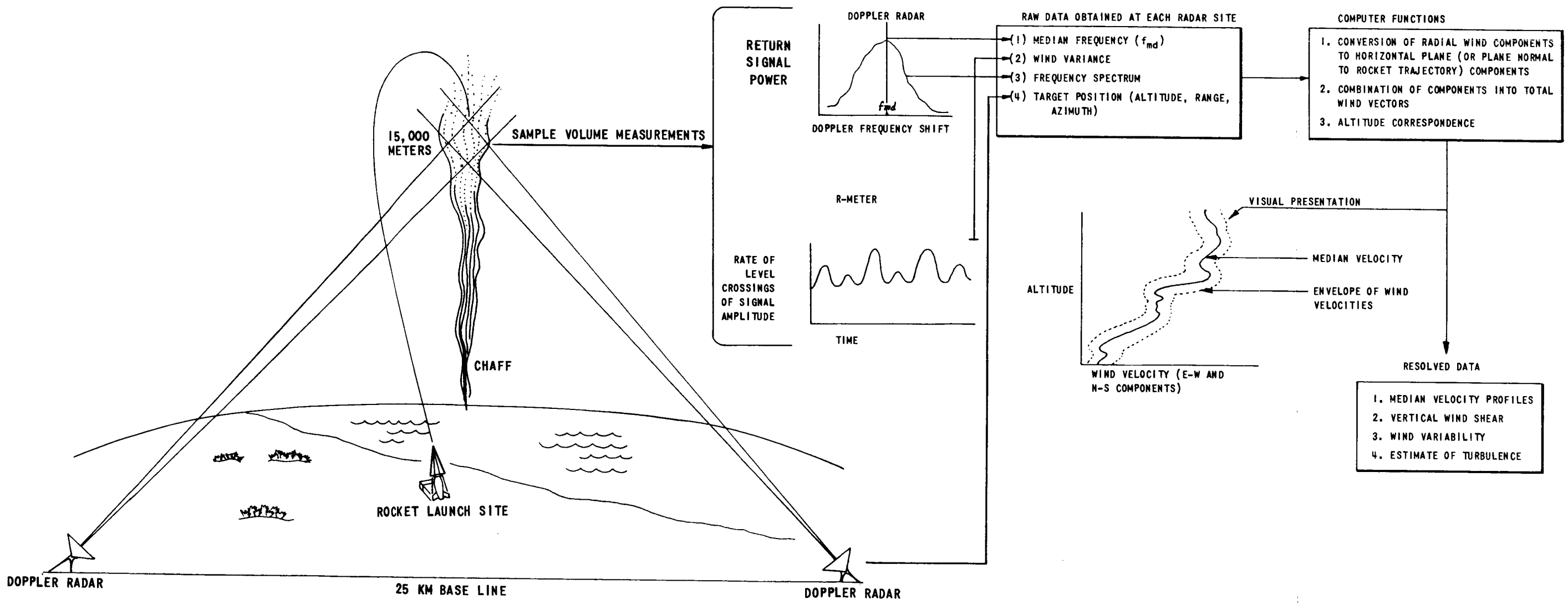

Figure 1 ILLUSTRATION OF RADAR SYSTEM OPERATION

radial velocity components and from the standpoint of simplicity of electronic-sensors. (Numerically, the values of the median wind velocity and the mean wind velocity in the sampled volume are generally equivalent.) It was also shown[4] analytically that the median frequency of the returned signal is equal to the radial component of the wind speed at the mid-altitude level of the sampled volume, provided (1) the vertical distribution of chaff is uniform within the sampled volume and (2) the wind varies monotonically (always increasing or always decreasing) with altitude within the sampled volume. Calculations indicate that an order-of-magnitude variation in the vertical concentration of chaff within the sampled volume would be tolerable if the vertical dimension of the radar beam at the half power points is less than approximately 100 m. (This condition can be met with a 60-foot antenna at X-band, out to a range of approximately 50 km.)

From sparse wind statistics available, it was estimated that the wind profile will generally be monotonic, and that occasional nonmonotonic distributions within a 100 m interval will not introduce significant measurement error. The approximate 99% probability wind shear (wind shear that will be exceeded only 1% of the time) as a function of height increment in the 10-14 km altitude region was extrapolated from data in Reference 5 and appears below.

Height Increment	99% Wind Variations
30 m	3 m/sec
60 m	7
90 m	9

On the basis of these extreme shears and limited smoke trail data (Section IIF), it appears that nonmonotonic wind variations of as much as 1.5 m/sec within the relatively small height interval involved would be rare.

The Doppler spectrum of wind as sensed by an X-band radar may vary from a few to several hundred cycles in width depending on atmospheric conditions. The problem is to determine the median of the spectrum, i.e., the frequency that divides the total power in the spectrum into two equal parts.

It is conceptually possible to tune a pair of slightly overlapping filters having a total bandwidth larger than the spectrum bandwidth in such a manner that equal power passes through each filter.

This tuning procedure is impractical. It is practical, however, to shift the spectrum so that the median Doppler frequency always corresponds to the frequency of overlap of a pair of fixed-tuned filters. The apparatus suggested for obtaining the median frequency is depicted in block diagram form in Figure 2. The received signal is mixed with the output of a variable frequency oscillator and fed to the two filters. The total power output of one filter is subtracted from that of the other to provide an error signal to control the frequency of local oscillator #2 in such a manner as to remove the imbalance in filter output. This condition can exist only if local oscillator #2 frequency is equal to the difference between a fixed offset frequency and the median Doppler shift, as indicated in Figure 3. To avoid ambiguity in wind measurement, the offset frequency must be chosen to correspond to wind speeds higher than can be sensed by the system.

2. Measurement of Wind Variance

As in the case of estimating the median wind velocity, analog techniques are available for real-time estimates of the variance of the velocity distribution. One such technique involves use of an R-meter,[6] a device for measuring level crossings of the returned signal power. When first received by a Doppler radar, the signal pulses carry amplitude and phase modulation. It has been shown[6,7] that the amplitude modulation of the power conveys information concerning the motion of scatterers, and that the rate of level crossings of the power depends upon the variance (σ^2) of the velocity distribution; the R-meter measures this rate and thus can be used to measure the variance of the velocity distribution.

It also appears possible to measure the variance by counting level crossings of the complete received signal. It is known that the mean number of crossings of a time function is directly related to the second moment of the power spectrum of the function.[8] If the spectrum is interpreted as a probability density, as is the case for the Doppler spectra in question, then the second moment is the mean square frequency. The variance can then be obtained by subtracting the square of the mean frequency from the mean square frequency.

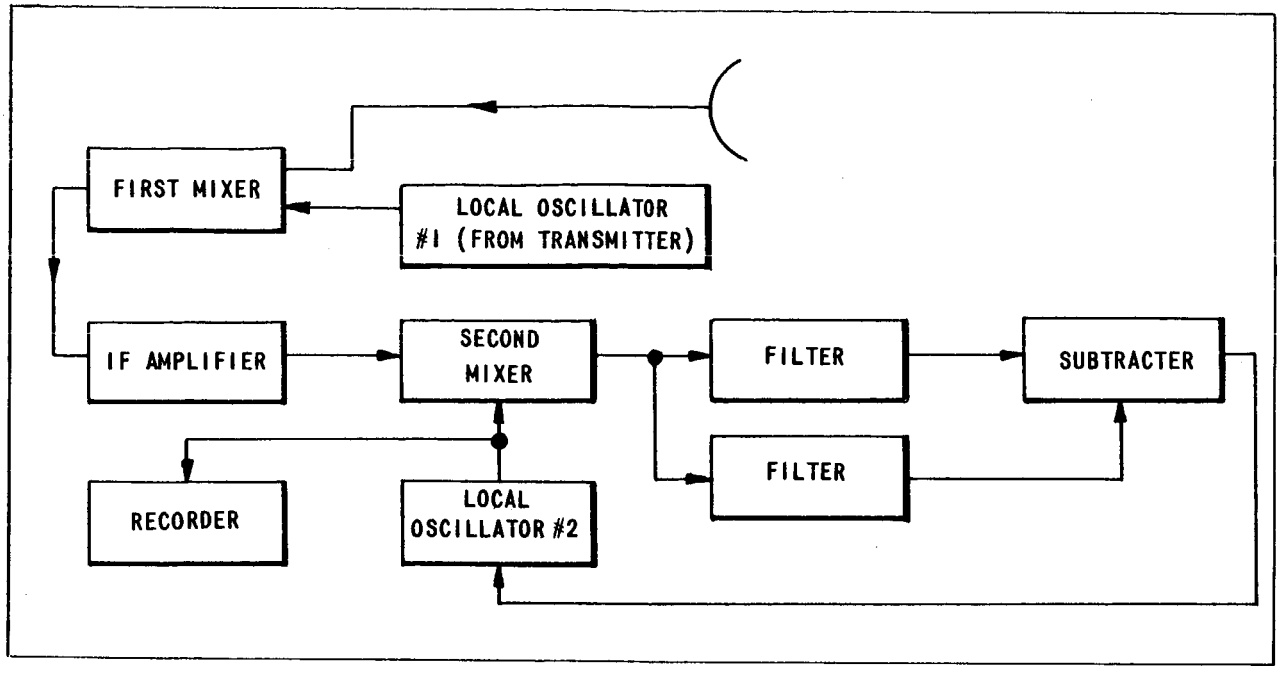

Figure 2 BLOCK DIAGRAM OF MEDIAN FREQUENCY SENSOR

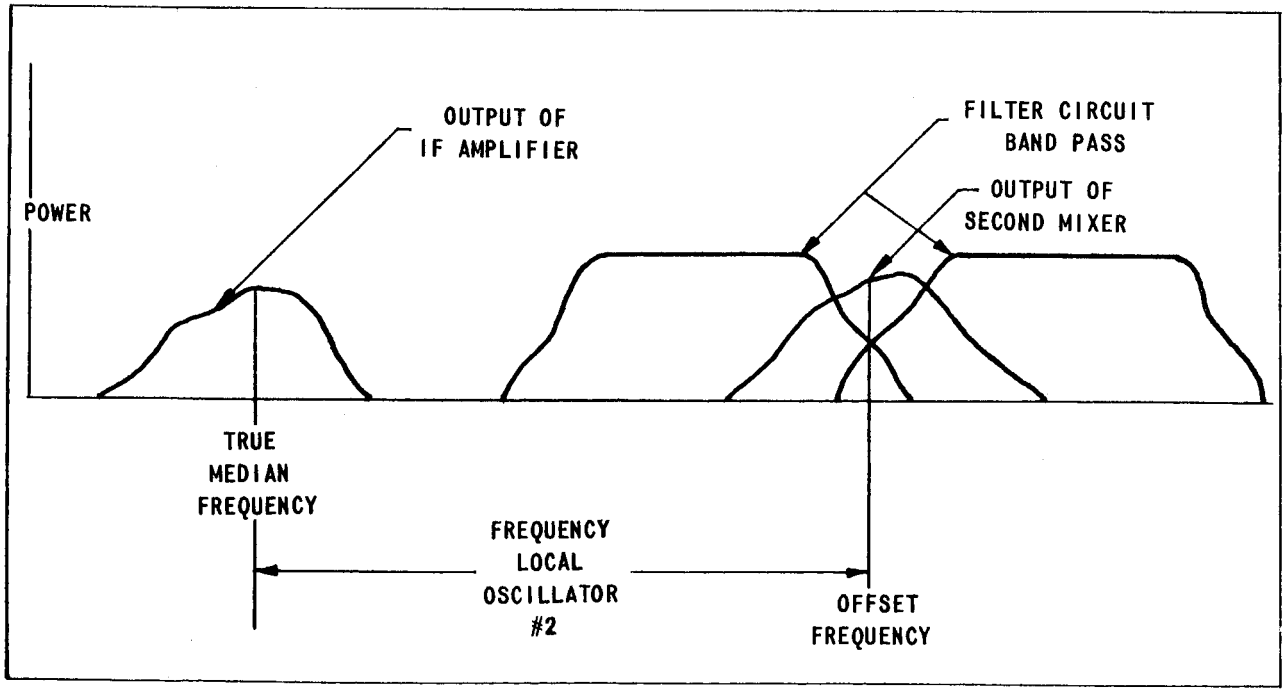

Figure 3 MEDIAN FREQUENCY DETERMINATION

The variance, which provides a measure of the spread of velocities about the mean, would appear influential in missile response characteristics, especially as critical mean wind conditions are approached.

3. Entire Doppler Spectrum Construction

The determination of the complete Doppler spectrum under rare non-monotonic conditions for "beam sharpening" purposes or for turbulence observations, necessitates more information about the actual velocity spectrum than that provided by the median frequency and the variance. (We have used the term "beam sharpening" to characterize a data analysis procedure which yields high resolution results like those which would be achieved with a narrower beam. It will be shown in Section IIF that such a technique for achieving higher spatial resolution is probably not required; however; its development constituted a useful step in understanding the full nature of the wind measuring system.)

The spread in the measured spectra may be due to either wind shear or turbulence in the sampled volume. One useful method for isolating the turbulence component involves a calculation, from a sequence of measurements of median velocities, of the wind shear component of the total variance. The difference between this calculated wind shear variance and the total measured variance can be attributed to turbulence. In Progress Report 1,[4] it is shown that the variance caused by a constant wind shear across a circular beam is

$$\sigma^2_{V(z)} = \left(\frac{\Delta V}{4}\right)^2 \qquad \text{(III. 1)}$$

Where ΔV is the difference in median wind components between the top and the bottom of the sample volume. This equation (or one similar to it derived for a different beam pattern or for non-linear shears) can be used to compute the variance due to shear.

The design goal for accuracy in individual components of the system was established at a velocity equivalence of 0.5 m/sec. For X-band radar, this corresponds to a frequency of approximately 30 cps. Consequently, 30 cps resolution was demanded in the construction of each frequency spectrum.

Doppler spectra of wind motions over a one hundred meter-high sampling volume are typically less than 200 cps wide. According to the wind shear data of Reference 5, the maximum (99%) shear to be anticipated in such a pencil beam would cause a spectrum width of 600 cps (approximately a 10 m/sec shear over a 100 m high beam). To provide for inclusion of turbulence effects, the design limit for frequency spread was set at 1200 cps. As has been shown in analyses of data processing and required sampling times (Progress Report 1), digital techniques for presenting the frequency spectra involve times that are prohibitively long.

The suggested method for constructing an entire frequency spectrum, shown in Figure 4, employs analog data reduction equipment together with digital recording apparatus. For a maximum 1200 cps spectrum width and 30 cps resolution at all frequencies, a total of 40 filter-integrators is required. The spectrum determination takes place during the required sampling time (about 2 seconds). Data emanating from the suggested apparatus will contain information about the distribution of wind velocities around the median.

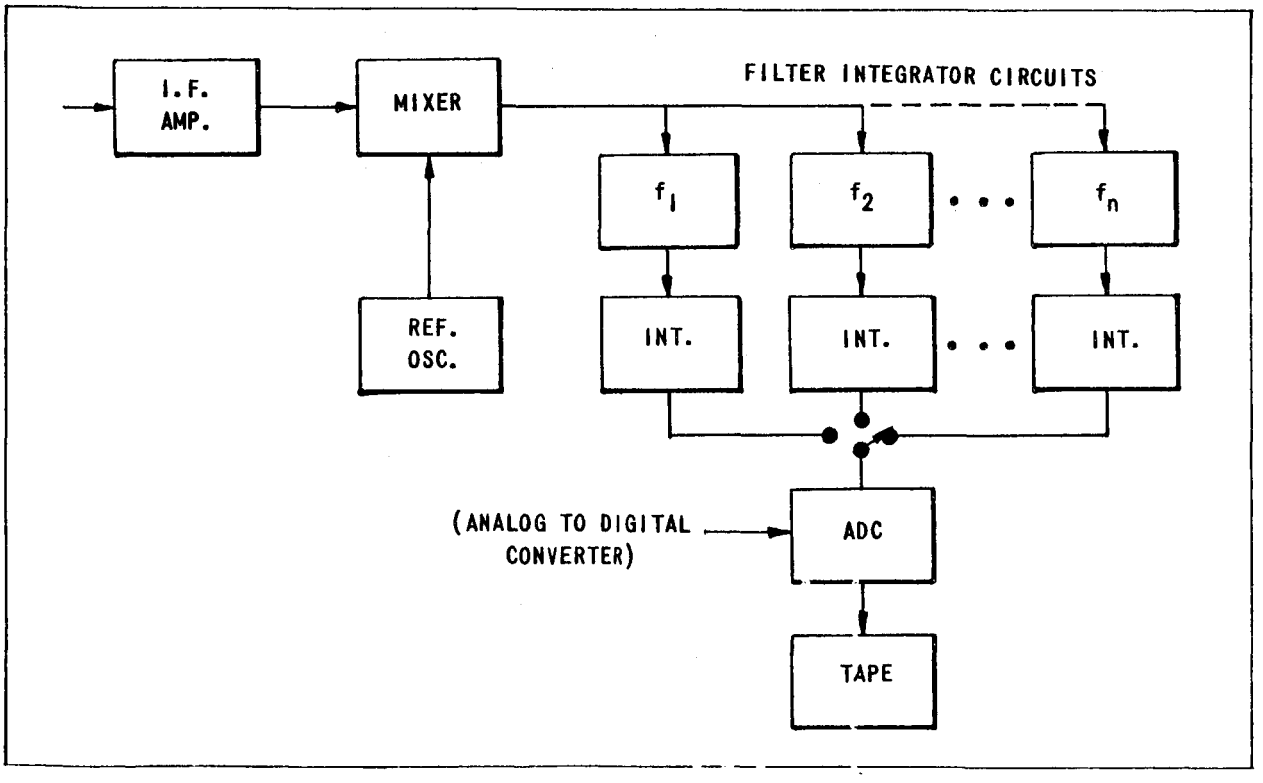

Figure 4 ANALOG-FILTER SYSTEM

4. Required Sampling Time of the Radar

In principle, the complete analysis of any spectrum, i.e., an analysis providing the exact amount of power present at every frequency, would require an infinitely long sample. In practical cases it is possible to estimate the power within any given frequency band with a precision determined by the length of record. Blackman and Tukey[9] considered this problem for bandpass-limited Gaussian noise (approximated by our Doppler spectra) and derived the following approximate relationship:

$$T_n = \frac{1}{R}\left(\frac{5}{6} + \frac{200}{E^2}\right) \qquad \text{(III. 2)}$$

where T_n = duration of the signal, in seconds

R = frequency resolution, in cps

E = 90% confidence interval of a spectral estimate, in db

T_n corresponds to the length of time the antenna is permitted to linger at one position; E describes the error (in db) of a spectral estimate; R is frequency resolution, which can be expressed as velocity resolution. To measure the entire spectrum with a velocity resolution of 0.5 m sec^{-1} and with 90% of the estimates occupying an interval of ± 1 db, i.e., falling within 1 db of the actual value, then the required sample time would be

$$T_n = \frac{1}{30\ cps}\left(\frac{5}{6} + \frac{200}{2^2}\right) = 1.7\ sec.$$

Therefore, a 1.7 second sample at each altitude interval of interest will assure that 90% of the estimates of the spectral components (30 cycles wide) will be within 1 db of the actual power value. Such a dwell time is required wherever detailed spectrum analysis is desired. To sample the entire 15 km column at this rate, which is unrealistic but represents the limiting condition, would require approximately 15 minutes exclusive of tracking time.

Consideration must be given to the minimum radar sampling time required to obtain reliable measures of median frequency, the principle system measurements from which wind shear can be calculated. The Blackman and Tukey equation can be applied as before in conjunction with the proposed twin-filter median sensor. The resolution element is the spectrum width, since each filter bandwidth is greater than this value. Further, since the single frequency is desired that divides the total power in the spectrum into two equal parts, the time required to choose this frequency within a given confidence interval will depend upon spectrum shape. Calculations for several idealized spectral shapes were made, with the Gaussian distribution, the shape most representative of observed wind data, being treated below.

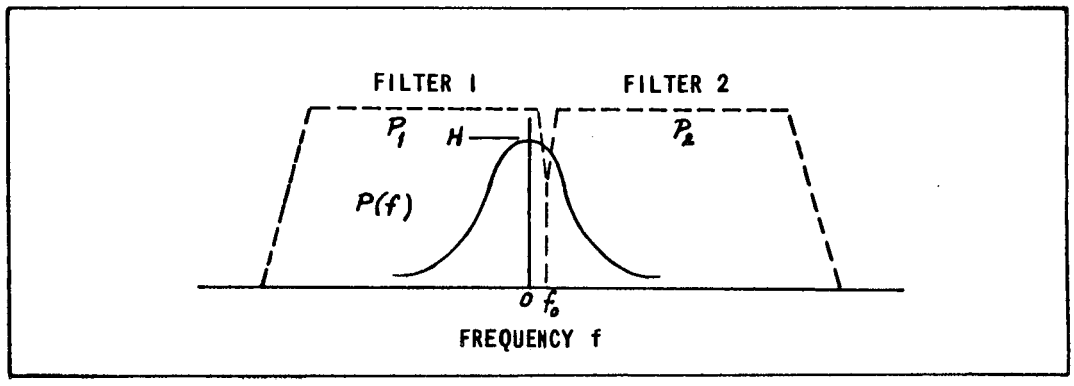

Figure 5 GAUSSIAN VELOCITY SPECTRUM AND TWIN FILTERS

Using the notation of Figure 5, one obtains power $P(f) = H \exp\left(-\frac{f^2}{2\sigma^2}\right)$ Characteristics of two filters, which transmit powers denoted by P_1 and P_2, intersect at frequency f_0. Thus,

$$P_1 = \int_{-\infty}^{f_0} H \, e^{\frac{-f^2}{2\sigma^2}} df$$

$$P_2 = \int_{f_0}^{\infty} H \, e^{\frac{-f^2}{2\sigma^2}} df$$

The change of variable $x = \frac{f}{\sigma}$ leads to

$$P_1 = H\sigma\sqrt{2\pi}\int_{-\infty}^{f_o/\sigma}\Phi(x)\,dx$$

$$P_2 = H\sigma\sqrt{2\pi}\int_{f_o/\sigma}^{\infty}\Phi(x)\,dx$$

where $\Phi(x) \equiv \frac{1}{\sqrt{2\pi}}\,e^{-x^2/2}$ is the Gaussian function, integrals of which are tabulated.

The ratio of powers passed by the two filters is:

$$\frac{P_1}{P_2} = \frac{\int_{-\infty}^{f_o/\sigma}\Phi(x)\,dx}{1-\int_{-\infty}^{f_o/\sigma}\Phi(x)\,dx} \qquad \text{(III. 3)}$$

Thus, the ratio of powers depends upon $\frac{f_o}{\sigma}$. For example, if $f_o = 30$ cps (corresponding to 0.5 m $\sec^{-1}$ for X-band radar) and $\sigma = 100$ cps,

$$\frac{P_1}{P_2} = \frac{0.6179}{1-0.6179} = 1.62$$

$$\log\frac{P_1}{P_2} = 0.21,$$

$$\text{or } P_1 > P_2 \text{ by } 2.1\,db.$$

The effective width of each filter is assumed to be at least 3σ (to include 99.7% of the power within the frequency spectrum) so that the resolution of each filter in this case is about 300 cps. Then, inserting appropriate values in expression (III. 2), the required sampling time

$$T = \frac{1}{300}\left[\frac{5}{6} + \frac{200}{(2.1)^2}\right] = 0.15 \text{ sec.}$$

Thus, if the filters are allowed to integrate for 0.15 sec on a spectrum of Gaussian shape and standard deviation of 100 cps, the indicated median will be correct to within ± 0.5 m sec^{-1} for 90% of the measurements.

Figure 6 is a plot of required sample time for various values of σ to insure this same accuracy. It can be seen that the required sampling time is suitable short (less than about 0.3 sec per sample), such that a complete median velocity profile could be sampled in two to three minutes, exclusive of tracking time.

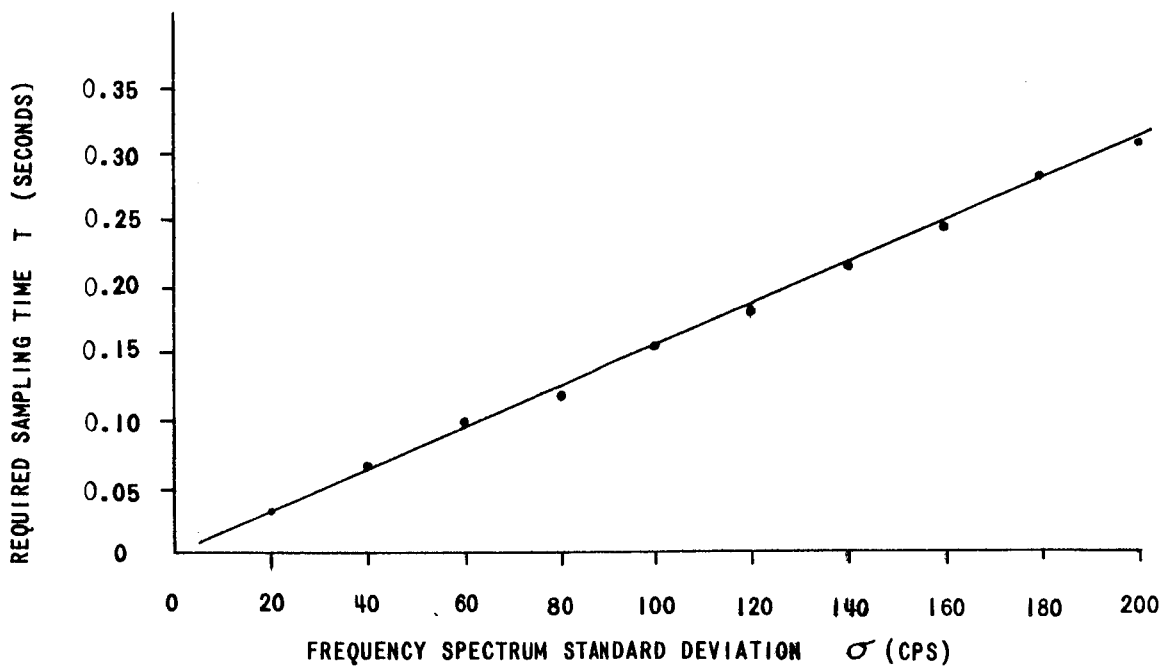

Figure 6 REQUIRED RADAR SAMPLING TIME AS A FUNCTION OF FREQUENCY SPECTRUM WIDTH TO OBTAIN MEDIAN VELOCITY MEASUREMENTS WITH AN ACCURACY OF 0.5 M/SEC

5. Radar Tracking Procedures

One of the important functions of the system is contained in its tracking mode. Two major conditions must be satisfied in automatically tracking the "vertical" column of chaff with radar. Both radars must first be programmed to track vertically up or down the column without being

confused by slope of the column or irregularities in chaff concentration. Secondly, the radial wind components from the "common" volume sensed by the two radars must be combined to yield the total horizontal wind vector. In principle this second aim can be met electronically by slaving one radar with an auxiliary receiver to the portion of the column illuminated by a master radar, an interesting approach which was rejected in favor of programming the two radars (via slant range and elevation angle data) to observe the same altitude level.

The latter, recommended, procedure for tracking at the programmed altitude is illustrated in Figure 7. The operation of the controlled altitude method can be visualized by first imagining the radar directed at the chaff column at a predetermined altitude of interest. The tracking receiver will provide the azimuth and elevation information necessary to force the antenna to point at the region of maximum radar cross section, which is drifting with the wind. Suppose now that a region of even greater chaff concentration exists at an altitude $A + \Delta A$. The tracking system would seek that location, at the incorrect altitude, unless otherwise controlled. The necessary control can be provided by sampling the column only at the prescribed altitude of interest; i.e., the range gate must be controlled to satisfy

$$R \sin \phi = A$$

Therefore, after prescribing A , we must sense $\sin \phi$, perform the necessary calculation of R and adjust the range gate of the tracking receiver accordingly. As the region of maximum radar cross section drifts away from the center of the sampled volume, it will invariably produce an error signal indicating the need for a direction change. When the wind is perpendicular to the beam, the azimuth angle will be changed and no change in range will be required. If some component of the wind is in the direction of the beam, which represents the general case, an elevation angle change will be indicated. This change in ϕ will be sensed and will automatically cause the necessary change in range for the next observation. The specified altitudes of observation will be obtained by feeding the predetermined values for A into the computer at the desired rate.

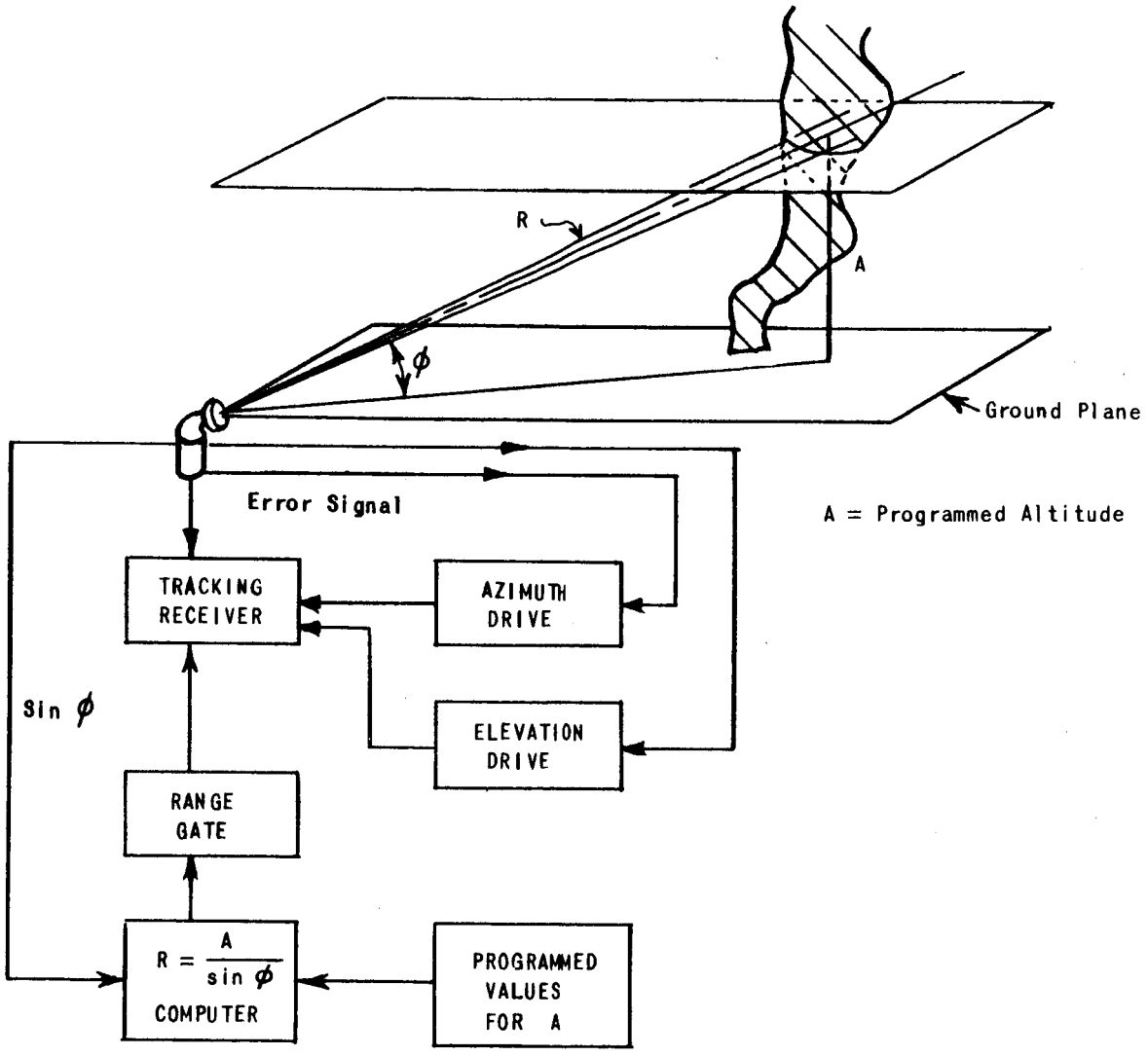

Figure 7 RADAR TRACKING SCHEME

A possible variation of this programmed altitude method involves tracking in range rather than elevation angle and then computing ϕ for fixed values of altitude A .

Field evaluation of the programmed-altitude tracking concept is required, with a modified tracking radar of the M-33 class considered suitable for the task. The M-33 tracking radar is already equipped with the conical scan features necessary for azimuth and elevation tracking of the chaff column. In addition it is equipped with a range tracking apparatus that includes altitude readout, a computer, and a servo that can be adapted for use in the programmed-altitude tracking system.

This method of matching altitude planes of both radars with a common program must take into account refractive index variations of the atmosphere and antenna pointing accuracy. Estimates of height errors so induced are given in the system error analysis (Section II G). Tolerable error should not be exceeded if standard corrective procedures for index of refraction effects are adopted and if stringent, antenna pointing accuracy is specified.

C. CALCULATION OF THE TOTAL WIND VECTOR FROM RADIAL COMPONENTS

In order to measure the total wind vector, it is necessary to combine two components measured in a common sampled volume. The magnitude and direction of the total wind vector at a particular altitude will be calculated from the following quantities:

(1) azimuth angles of two radars illuminating a common region

(2) elevation angles of two radars illuminating a common region

(3) radial component of velocity measured by these radars

(4) the fall velocity of chaff, which is known approximately (see Section II E)

Geometry for the problem is presented in Figure 8. At point P , at altitude h above the surface, the horizontal wind vector is presented by $\overline{V}_H$.

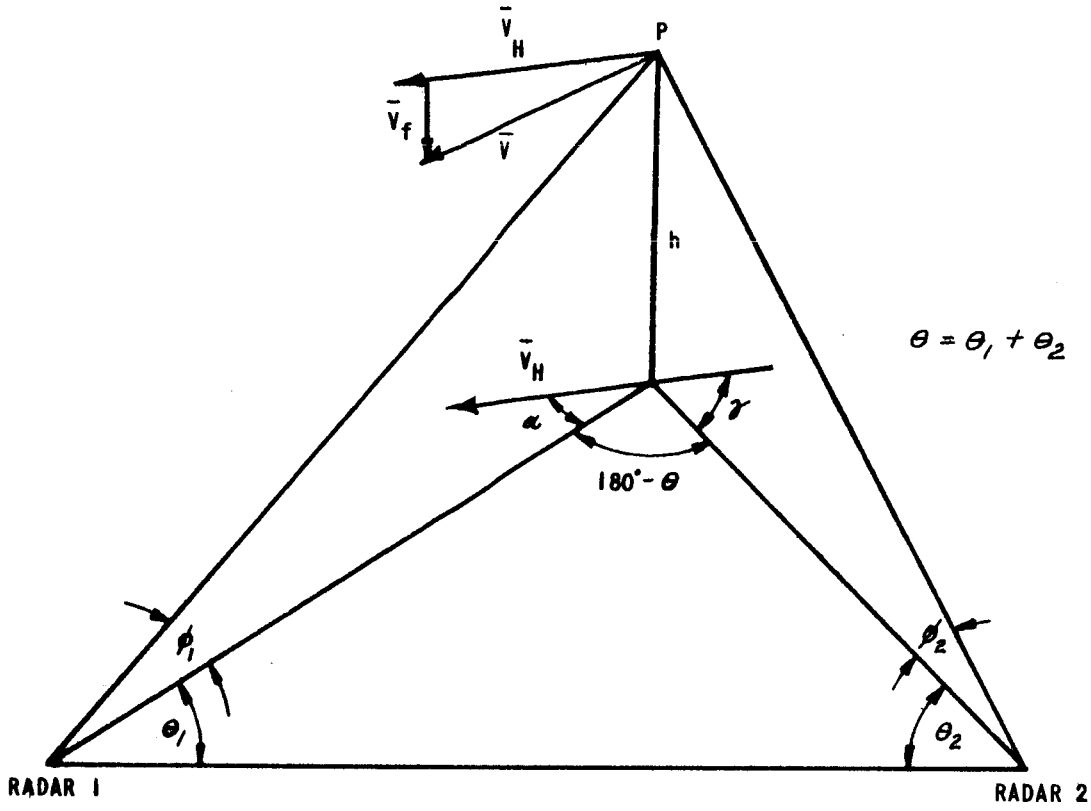

Figure 8 THE RADAR GEOMETRY

The vertical component of the chaff's velocity is $\bar{V}_f$, so that the total velocity vector $\bar{V}$ of the chaff is given by

$$\bar{V} = \bar{V}_f + \bar{V}_H .$$

Azimuth and elevation angles from the two radars to point P are given by θ and ϕ with subscripts denoting the appropriate radar. $\bar{V}_H$ makes the azimuth angle α with the first radar and γ with the second. Let V_1' and V_2' be the velocities measured at the two sites. Then we can write

$$\left.\begin{aligned} V_1' &= V_f \sin\phi_1 + V_H \cos\alpha \cos\phi_1 \\ V_2' &= V_f \sin\phi_2 - V_H \cos\gamma \cos\phi_2 \end{aligned}\right\} \qquad \text{(III. 4)}$$

where V_f and V_H are magnitudes of $\overline{V_f}$ and $\overline{V_H}$, and a measured velocity is seen to be positive for motion toward the radar. From the figure note that $\gamma = (\theta_1 + \theta_2 - \alpha)$. The radar angles are measured along with V_1' and V_2', and V_f is known, so that the system (III. 4) therefore has two unknowns: V_H and α.

It is convenient to eliminate the terms containing the chaff fall velocity by subtracting the correction for fall velocity from the raw data as an initial step in the calculation. This leads to radial velocities

$$\left.\begin{aligned} V_1 &= V_H \cos\alpha \cos\phi_1 \\ V_2 &= V_H \cos\gamma \cos\phi_2 \end{aligned}\right\} \qquad \text{(III. 5)}$$

When the expression relating γ to α is substituted into Equations (III. 5) they can be solved for the desired horizontal wind velocity V_H to yield

$$\begin{aligned} V_H^2 &= \csc^2(\theta_1 + \theta_2)\left[V_1^2 \sec^2\phi_1 + 2V_1V_2 \cos(\theta_1 + \theta_2)\sec\phi_1 \sec\phi_2 + V_2^2 \sec^2\phi_2\right] \\ &= f(\theta_1 + \theta_2, \phi_1, \phi_2, V_1, V_2). \end{aligned} \qquad \text{(III. 6)}$$

Alternately, the angle α can be obtained from (III. 5):

$$\tan\alpha = -\csc(\theta_1 + \theta_2)\left[\frac{V_2}{V_1}\frac{\sec\phi_2}{\sec\phi_1} + \cos(\theta_1 + \theta_2)\right]. \qquad \text{(III. 7)}$$

The formulas (III. 6) and (III. 7), or similar expressions, must be programmed in the system since they give the magnitude and direction of the total wind vector in terms of measured quantities.

D. RADAR REQUIREMENTS

A summary of the major radar characteristics required to meet the objectives of the wind sensing system appears below.

Table 1

DOPPLER RADAR CHARACTERISTICS

Radar Peak Power	100 kw	
Wavelength	X-band (3 cm)	
PRF	Up to 12,000 cycles/sec	
Pulse Length	0.1 to 2.0 microseconds	
Signal-to-Noise Ratio	20	
Antenna Size (Maximum Dimension)	Option 1	Option 2
	60 feet	45 feet
Beam Dimensions (half power points)	0.1° Vertical	0.143° Vertical
	1.0° Horizontal	0.45° Horizontal

1. Recommended Antenna Specifications

The antennas initially visualized for use in the Wind Shear system were 60-foot height-finder dishes having a 10:1 eccentricity, with a vertical 3-db beamwidth of 0.1° and a horizontal beamwidth of 1.0°. The wide horizontal dimension of the beam reduces horizontal tracking difficulties and increases the total sample volume, while not degrading system accuracy; the increased sample volume assures observation of a sufficient number of chaff dipoles to provides a good statistical measure of the wind within a given altitude increment. This order of magnitude difference in beam dimensions is in keeping with the scale of quasi-persistent wind variations (in the horizontal and vertical directions) observed in the atmosphere.

The vertical dimensions of the resolution element for such an antenna and a 0.2 microsecond pulse length are shown as a function of range in Figure 9. Pulse lengths up to two microseconds are also provided so that adequate signal strength and wind statistics can be obtained from extremely diffuse trails during unusually long observations or under very turbulent conditions. The large antenna dimension serves to restrict the vertical dimension of the beam to about 90 m at a range of 50 km. By limiting the beam height, one increases the probability of sampling only monotonic wind variations, whereby the median frequency sensor yields the wind velocity at the center of the beam.

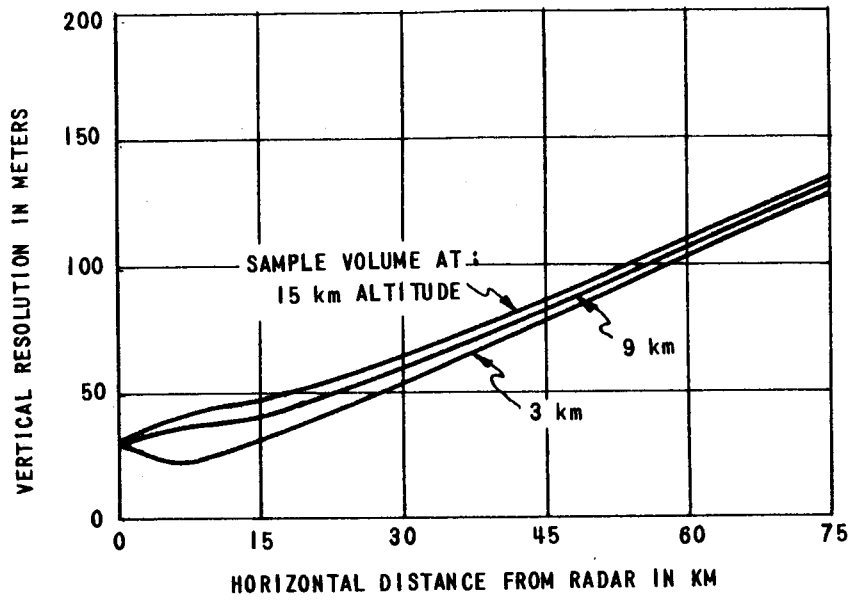

Figure 9 VERTICAL RESOLUTION OF A RADAR BEAM AS A FUNCTION OF DISTANCE AND ALTITUDE OF OBSERVATION FOR
(a) 0.2 MICROSECOND PULSE DURATION
(b) 60 FOOT ANTENNA (0.1° BEAM)

It is recognized that 60-ft antennas, which, more adequately than smaller antennas, approach the desired spatial resolution, constitute rather complex apparatus. Consequently, the performance characteristics of a more compact 45 ft. (by 15 ft.) antenna were also considered. A detailed analysis was made of both classes of antennas in terms of desired:

a. Boresight and pointing accuracy

b. Elevation and azimuth tracking rates

c. Tracking patterns compatible with the constant-altitude scan technique

d. Response to antenna wind loading and differential heating effects.

It was concluded that an antenna of either size could be developed to satisfy system performance requirements, but that the extent of equipment development and subsequent field maintenance involved would markedly favor the 45 ft. antenna. The results of the antenna evaluation are incorporated in a set of recommended radar characteristics attached as Appendix A.

2. Coherent X-band Transmitter-Receiver

A pulsed-Doppler system with range gate facility is shown in Figure 10. In this recommended system, the return signal is converted to IF and passed through an amplifier. The IF amplifier output is then gated (this may be an integral part of the IF amplifier) before final mixing to the desired frequency where Doppler detection takes place.

Pulsed-Doppler radars have the same basic problems of transmitter stability as do CW radars. These problems are, in fact, common to any coherent system. In the receiving system, care must be taken to provide sufficient dynamic range and to maintain linearity over this range so as to avoid intermodulation products which spread the signal spectrum and deteriorate the signal-to-noise ratio.

The following items are of particular concern in the wind sampling tasks involved:

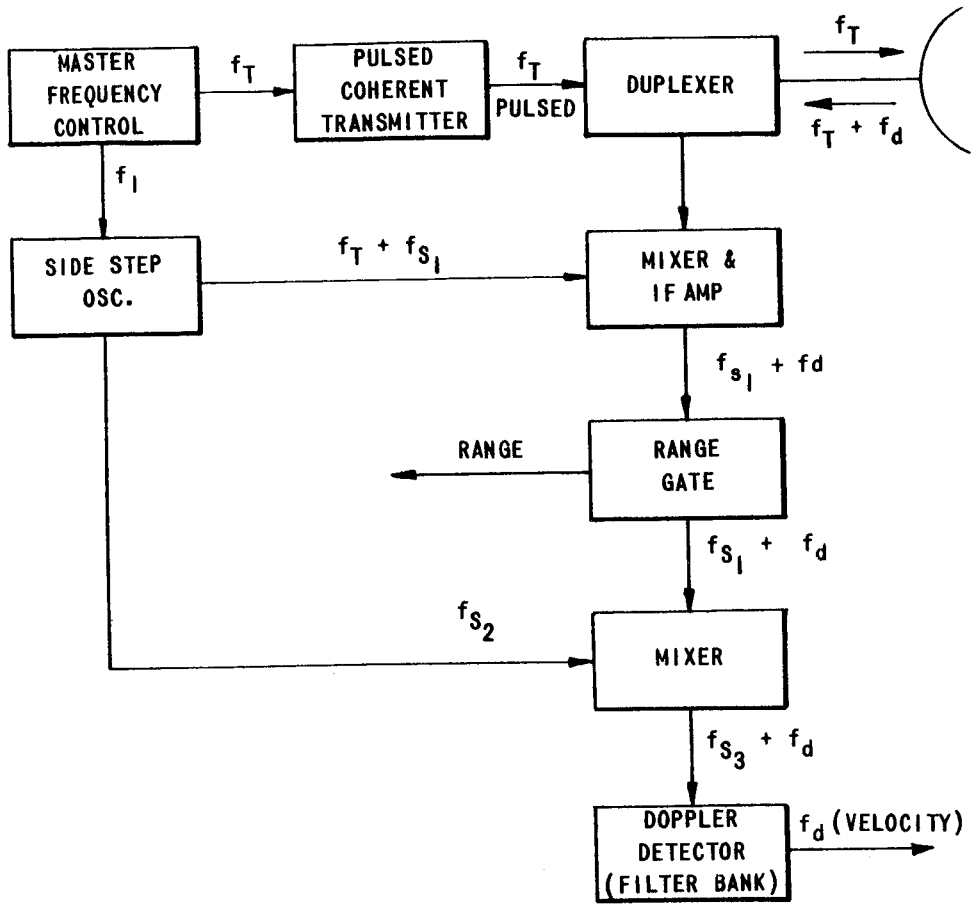

Figure 10 GATED PULSED-DOPPLER SYSTEM

a. A minimum pulse width of 0.1 μ sec is desired to restrict the size of the sampling volume when high (spatial) resolution wind measurements are desired.

b. A high pulse repetition rate of 12 kc will accommodate winds of 90 m/sec (maximum unambiguous velocity detection = 1/2 PRF).

c. Power outputs of 100 kw peak and 2.4 kw average will assure adequate signal return from chaff scatterers over the operating conditions and ranges envisioned. Because of the high duty cycle (and average power) required, ordinary T-R (transmit-receive) tubes probably will not be satisfactory. Ferrite devices have been suggested because of their very rapid recovery time.

A block diagram of the proposed configuration is shown in Figure 11. A multiplier chain driven by a crystal oscillator is used to derive the local oscillator signal by means of a sidestep circuit. Other outputs are used to provide stable conversion of the I. F. signal to the desired frequency (6 KC). This output has provisions for range gating as shown. An amplitude detected output without range gating is also desired and is provided by a second I. F. amplifier and detector.

An over-all list of desired characteristics of the radar transmitter-receiver is included in Appendix A.

E. CHAFF DISPENSING AND QUANTITY REQUIREMENT

Rather extensive investigations were made of chaff characteristics and suitable methods of dispersal. The major areas that were dealt with include:

1. Required chaff concentration
2. Evaluation of chaff types
3. Fall velocity of chaff (for wind velocity correction)
4. Construction of an aircraft chaff dispenser (Section III A)
5. Rocket chaff dispensing concepts

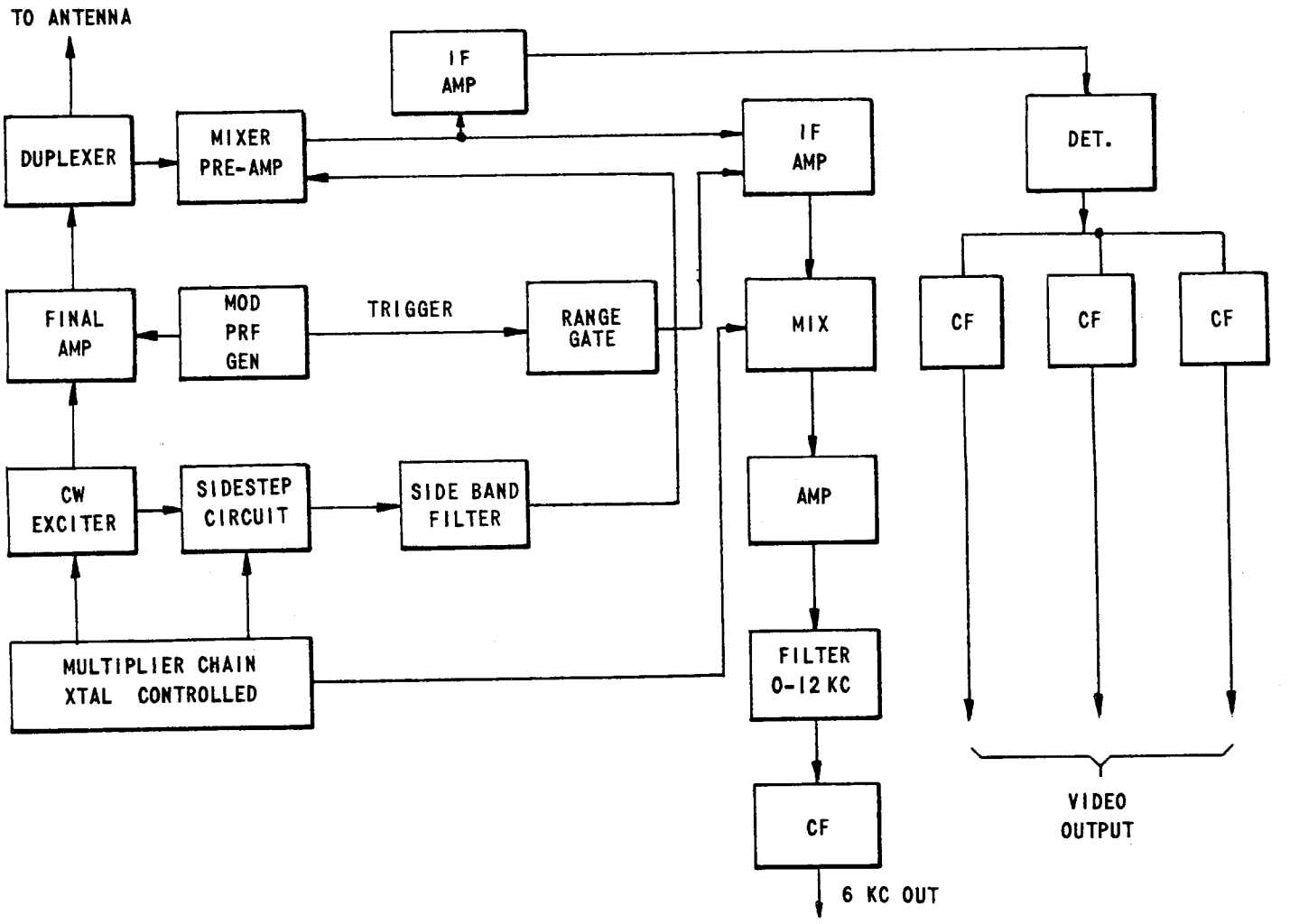

Figure 11 BLOCK DIAGRAM OF COHERENT TRANSMITTER/RECEIVER

1. Chaff Concentration Requirements

It is essential that a sufficient concentration of chaff dipoles comprise the chaff column in order to assure (1) adequate radar signal return and (2) a statistically meaningful representation of all wind velocities within an illuminated volume. Subsequent paragraphs lead to the conclusion that both requirements can be met over reasonable periods of time if 3 to 5 lbs of chaff, consisting of approximately 4 million dipoles per pound, are used for a 15 km high chaff column.

The basic radar equation can be rearranged into the form

$$Z \approx 4 \times 10^{-24} \frac{R^2}{P_t D^2 \tau^2} \qquad \text{(III. 8)}$$

where Z is the required target cross section per unit volume (m^2/m^3)

R is range (meters) = $\left[30 \times 10^2\right]$

P_t is peak power transmitted (watts) = $\left[10^5\right]$

D is antenna diameter (meters) = $\left[14\right]$

τ is pulsewidth (sec) = $\left[0.2 \times 10^{-6}\right]$

and a signal-to-noise ratio of 20 is assumed.

Substituting the figures in brackets, which are representative values of the contemplated Cape Canaveral system (45 foot antenna), one obtains

$$Z \approx 4 \times 10^{-9} \ m^2/m^3 \qquad \text{(III. 9)}$$

The average cross section per unit volume for a cloud of chaff is given by

$$Z = n \sigma_1 f, \qquad \text{(III. 10)}$$

where n is the number of chaff particles per unit volume

σ_1 is the cross section of an individual particle ($\sigma_1 = 0.22 \ \lambda^2 \approx 2 \times 10^{-4} \ m^2$ for 3 cm radar)

f is a chaff orientation factor estimated from empirical evidence to be 0.16.

Combining equations (III. 9) and (III. 10), we can solve for n , the number of chaff particles required per unit volume under the representative conditions imposed.

Hence,

$$n = 1.2 \times 10^{-4} \text{ particles per } m^3 \qquad \text{(III. 11)}$$

Thus, for a chaff column 1.5 km in diameter and 15 km high, approximately 3 million chaff dipoles would be required to produce a good radar target. To provide for more than one or two velocity profile determinations while the chaff particles are diffusing, this theoretical minimum quantity must be increased. Assuming a factor of two to three increase, and knowing that the X-band chaff particles under consideration (Table 2) have a number density of three to five million per pound, it is evident that as little as 1 lb of chaff might suffice per column.

Table 2
X-BAND CHAFF CHARACTERISTICS

Chaff-Characteristics	Aluminum Ribbon Foil	Metallized Nylon Cylinders
Dimensions	0.008" W x 0.00045" T x 0.6"L	0.0035" dia x 0.6"L
Dipoles per pound	~ 4.7 million	~ 3 million

In addition to adequate signal return, consideration must also be given to the number of chaff particles in each illuminated volume of the radar. As indicated above, one pound of chaff uniformly distributed over the entire chaff column will result in approximately 1×10^{-4} particles/m^3.

Consider a high resolution sample volume at 50 km range with dimensions of approximately 100 m height (0.12°), 300 m width (0.4°) and 30 m length (1/2 pulse length plus 1/2 gate), occupying 90×10^4 m^3. Thus, for a 1 lb. release there would be about 90 chaff particles in the illuminated volume. This number is adequate for a statistically meaningful representation of the velocities within the illuminated volume. However, depending on the degree of chaff clumping

and the turbulent diffusion on any given day, this value might well be increased by a factor of three or more.

It can be tentatively concluded on theoretical grounds, that 3 to 5 lbs of chaff (approximately 4 million dipoles per lb) dispersed over a 15 km column should provide:

a. adequate signal return for periods of at least 30 minutes
b. a valid statistical representation of the Doppler velocities within the illuminated volume.

2. Chaff Fall Velocity and Handling Characteristics

To provide information on the terminal fall velocity of radar chaff (necessary in calculating true horizontal wind velocity - Section II C), two efforts were initiated; (1) a theoretical analysis of the fall characteristics of chaff under the flow conditions encountered at altitudes between sea level and 15 km, and (2) a series of measurements of chaff fall velocity in the CAL altitude chamber. The dependence of chaff terminal velocity on temperature and pressure was thereby determined for X-band aluminum foil chaff and X-band Suchy chaff (metallized nylon cylinders). Dimensions of the chaff types were given in Table 2.

The final results are presented in Figures 12 and 13 where chaff terminal velocity is plotted as a function of altitude for two model atmospheres - the ARDC Model Atmosphere (1959) and the Air Force Tropical Atmosphere. The mean velocity data can be used for correcting measured target velocities with Doppler radar.

The aluminum foil exhibited a tendency to stick together in clusters containing several dipoles. For this reason, the foil chaff particles have a higher mean velocity and show a greater spread in velocity than when efforts are taken to manually separate the foil dipoles. Also, the number of effective scatterers per pound of foil chaff may be less than the manufacturer-specified number of individual dipoles by a factor of 2 or 3. The Suchy chaff is superior in this respect; the measured chaff particle velocities are essentially those characteristic of the single dipoles and the spread of velocities is, therefore, less than that of the foil chaff.

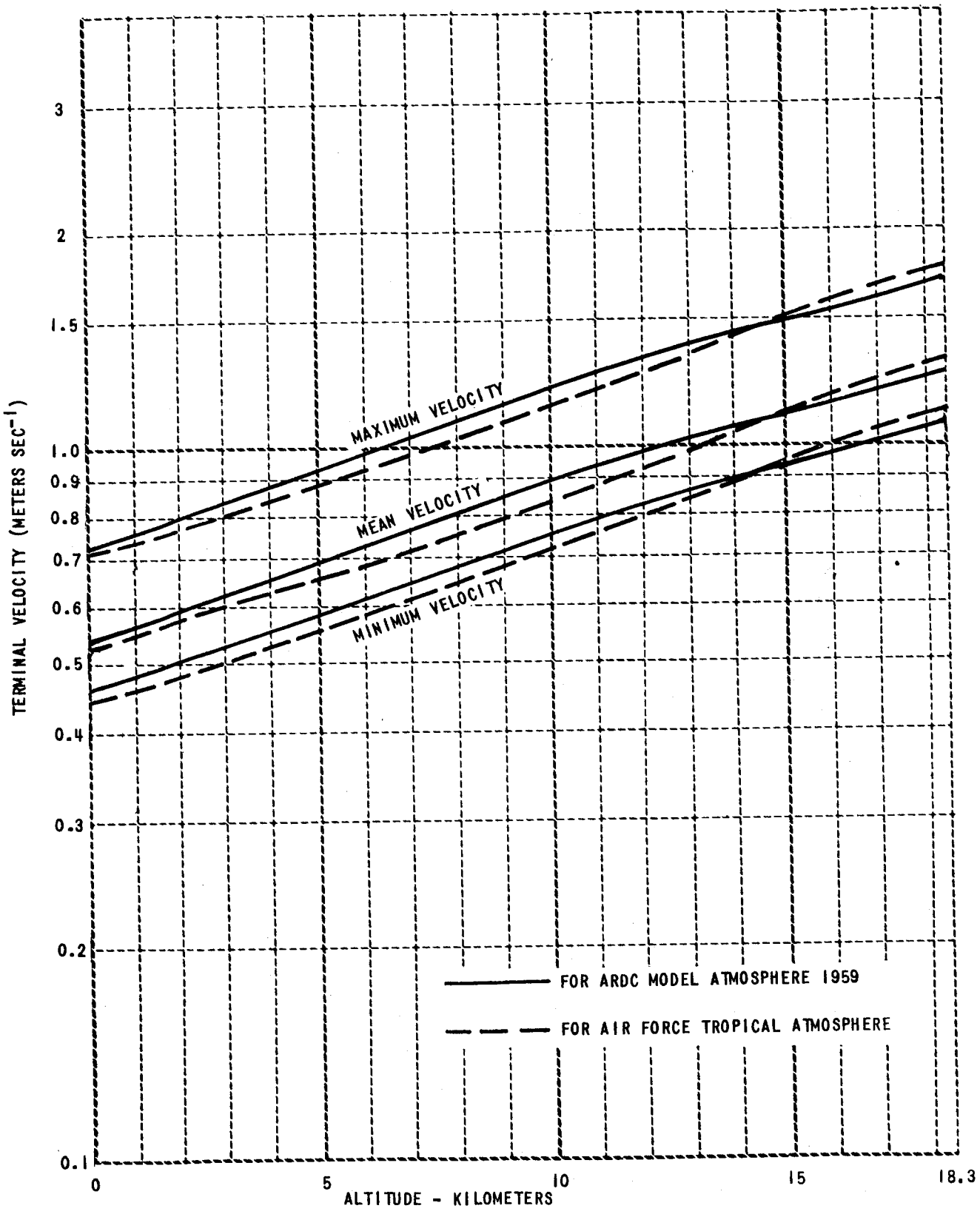

Figure 12 CHAFF FALL VELOCITY VS ALTITUDE (X-BAND SUCHY CHAFF, 0.0035" DIAMETER)

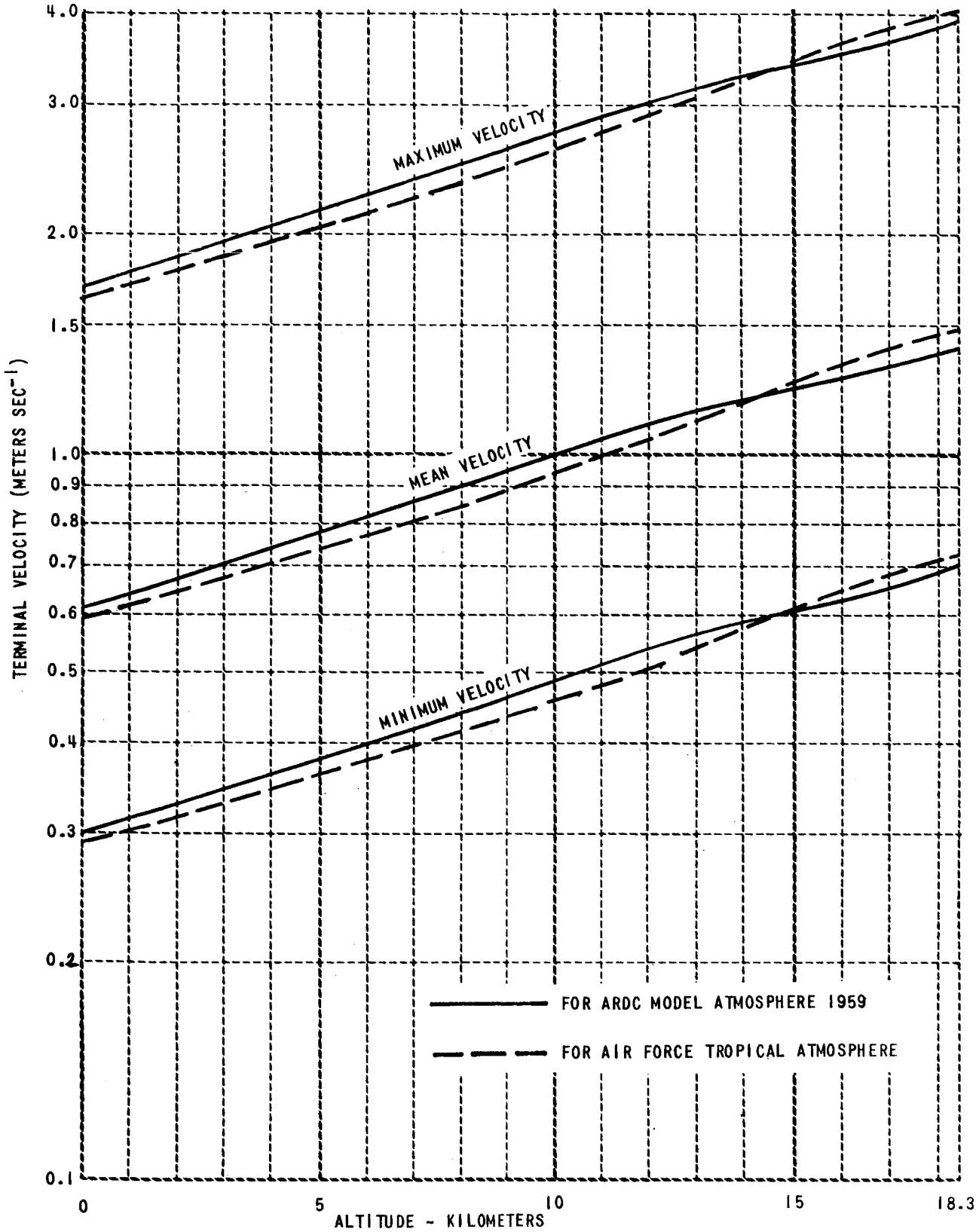

Figure 13 FOIL CHAFF FALL VELOCITY VS ALTITUDE (REVERE X-BAND CHAFF, 0.008" x 0.00045")

Since the agitation experienced by the foil chaff particles when they are dispensed from an aircraft or rocket will probably be more effective in separating the dipoles than that given the groups of chaff particles in this series of measurements, the mean velocities and the spread of velocities of the foil chaff in actual practice may be somewhat less than that reported here.

3. Rocket Chaff Dispenser

Design specifications for a rocket chaff dispenser were formulated and presented in Progress Report 1 and subsequently distributed to potential subcontractors. The proposal for equipment development submitted by Nortronics (Division of Northrop) was judged superior to others received.

Details of the proposed chaff dispenser are contained in reference (10). The envisioned dispenser consists of a bullet-shaped cartridge, filled with chaff, which separates from the rocket motor at burnout. Drag fins stabilize and slow the freely falling unit and, commencing at an altitude of approximately 17 km, chaff is continuously expelled by the combined action of an electric motor and compressed springs. Provisions were made for varying the range of the column and the chaff dispensing rate, as desired.

F. DATA PROCESSING PROCEDURES

The data processing and handling procedures involved in converting sensed radar data to meaningful wind motion information are summarized as follows:

1. Basic Measurements Made With Each Radar
   - (a) Median Velocity (Analog Twin-Filter Discriminator)
   - (b) Wind Variance (Analog R-meter)
   - (c) Velocity Spectra (Analog Filter Bank plus digital or analog Program)
2. Sub Programs
   - (a) Constant Altitude Tracking Mode (Digital Program)
   - (b) Chaff Fall Velocity Correction
   - (c) Index of Refraction Profile Input
   - (d) Beam Sharpening

3. Data Collation and Synthesis

   (a) Transmission of Data from Two Radar Sites to Central Location

   (b) Combining of Separate Radial Velocity Components into Total Horizontal Wind Vectors

A combination of analog and digital processing methods is recommended for most efficiently treating the raw data. Techniques for obtaining the basic sensor readouts are indicated above in parentheses, their operation having been discussed in Section II B. Data corrections for chaff fall velocity and atmospheric refraction gradients can be applied via straight-forward sub programs. The remaining items (2d and 3) will be briefly discussed.

1. Beam Sharpening

Initially it was considered mandatory to utilize a "beam sharpening" procedure, i.e., a data processing technique for effectively reducing the height of the radar sampling volume from 100 m (achievable with a 45 to 60 ft. antenna) to 30 m, the desired height resolution. Subsequently, however, the median frequency technique was devised which provides the wind velocity at the center of the beam; this relationship is true irrespective of beam height provided the wind varies monotonically with altitude within the sampled volume and the chaff is uniformly distributed. Thus, the need for beam sharpening becomes less critical and must be judged in terms of three factors, (1) the frequency of nonmonotonic wind distributions over height increments under consideration (60-150 m), the magnitude of error in median velocity measurements introduced by typical nonmonotonic distributions, and (3) the degree of improvement effected by appropriate beam sharpening procedures.

Wind shear data over these small height increments are exceedingly scarce. A preliminary analysis was made of NASA smoke trail data* that provided three wind profiles plotted at 30 m (100 ft) height intervals. Table 3 summarizes the

*NASA, Langley Research Center, Wallops Island, Virginia; Smoke Trail Data for 21 Sept. 1959, 4 Nov. 1959 and 4 Dec. 1959.

the results. Of 926 layers investigated, approximately 15% possessed nonmonotonic variations in velocity magnitude of 0.1 m/sec or more (only 3% of the layers contained nonmonotonic wind variations in excess of 1.0 m/sec). The average deviation thereby introduced between the true wind velocity and that indicated by the proposed median velocity technique was only 0.1 m/sec and 0.2 m/sec respectively.

Table 3

FREQUENCY AND SEVERITY OF NONMONOTONIC WIND VARIATIONS WITHIN 60 m HEIGHT INTERVALS
(3 Tropospheric and Lower Stratospheric Wind Profiles)

No. of 60 m (200 ft) Layers	Assumed Accuracy of Smoke Trail Data	Nonmonotonic Cases (%)	Resultant Ave. Error in V md	Maximum Error in V md
926	0.1 m/sec	143 (15%)	0.1 m/sec	0.5 m/sec
926	1.0 m/sec	29 (3%)	0.2 m/sec	0.5 m/sec

Thus, for the three cases studied, it is evident that the effect of these nonmonotonic wind (velocity magnitude) variations on system performance would be slight. It is recommended that a more detailed analysis be made of all available smoke trail data covering (1) height increments of 200, 400 and 600 ft. and (2) east-west, north-south wind velocity component data (rather than resultant velocity data) which is more compatible with what a radar will "see."

Simultaneous investigation was made of the degree to which beam sharpening techniques could improve radar height resolution. The data subtraction technique considered for beam sharpening is illustrated in Figure 14. It will be recalled that the basic datum obtained with a Doppler radar from a distributed target is the probability density of velocity within the sampling volume of the beam; the width of the Doppler spectrum is an indication of all velocities that exist within the beam. Hence by subtracting spectrum 2 from spectrum 1, the remaining spectral frequencies can be assigned to the nonoverlap portion of the beam in position 1. In this case where the antenna was moved down the equivalent of one-half beam width, the beam was effectively "sharpened" by a factor of two.

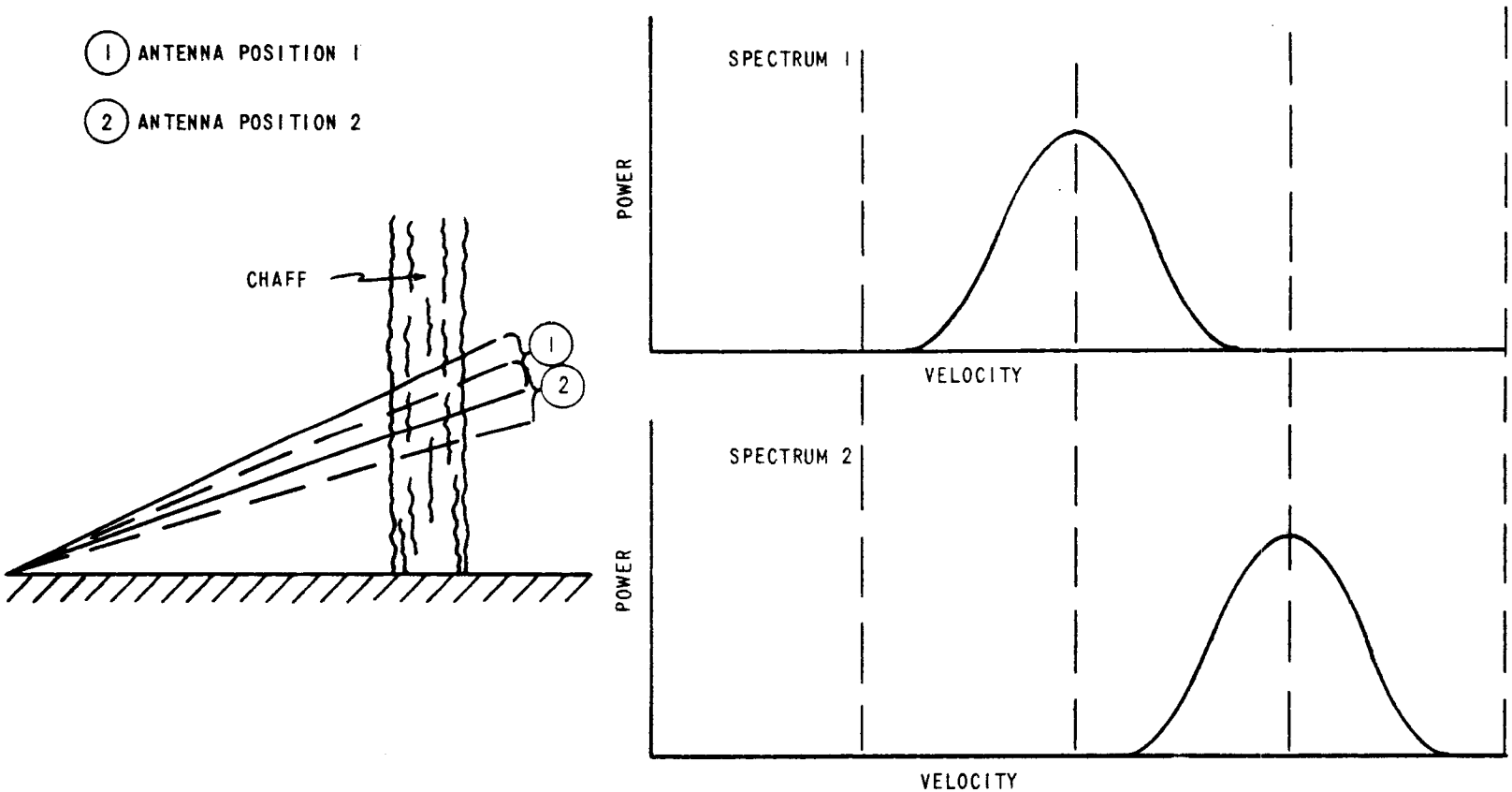

Figure 14 BEAM SHARPENING CONCEPT

It can be shown that this manner of improving spatial, hence velocity profile, resolution is limited by radar movement precision and by the actual wind velocity profile within the beam height. Precise control of large antennas under consideration is generally restricted to ±2 min tolerances, which at 35 to 50 km ranges amount to ±20 to 30 m.

To illustrate the effect of the wind profile on beam sharpening capability, consider a simplified case (Figure 15) where wind velocity varies periodically with altitude. In the restrictive situation in which the period is equal to (or an integral multiple of) the beamwidth (BW), it becomes evident that the same velocity components are represented in the resultant frequency spectrum as the beam is displaced vertically - hence no discrimination or beam sharpening is possible. The most favorable condition is that in which the beamwidth to period ratio $\left(\frac{BW}{P}\right)$ lies between 0.5 and 1.0. Discrimination also takes place as this ratio increases from one to infinity, but for constant antenna displacements the subtraction process will yield an ever decreasing spectrum of residual velocities. Consideration of spectral reliability further indicates that accuracy degrades significantly when $BW/p > 0.75$ Thus for the assumed wind profile, beam sharpening will provide greater spatial resolution, but maximum improvement is limited to rather restrictive conditions i.e., $0.5 < \frac{BW}{P} < 0.75$.

For other vertical wind distributions, similar beamwidth - profile relationships can be worked out. Owing to (1) the indicated selectivity of the beam sharpening process, (2) an inability to describe the actual profile within a beamwidth, and (3) preliminary evidence that errors due to assuming a completely monotonic wind distribution are relatively minor, it is felt that the beam sharpening requirement can be eliminated.

2. Data Synthesis

Collation of the wind component data acquired by both radars can efficiently be handled by transmitting the data from one radar site (via telephone lines) to the other. The latter radar unit can be equipped with appropriate computer equipment for calculating the horizontal wind vector, wind variability and turbulence information versus altitude. Digital techniques appear most attractive for resolving component data, although further investigation is required before computer equipment can be specified.

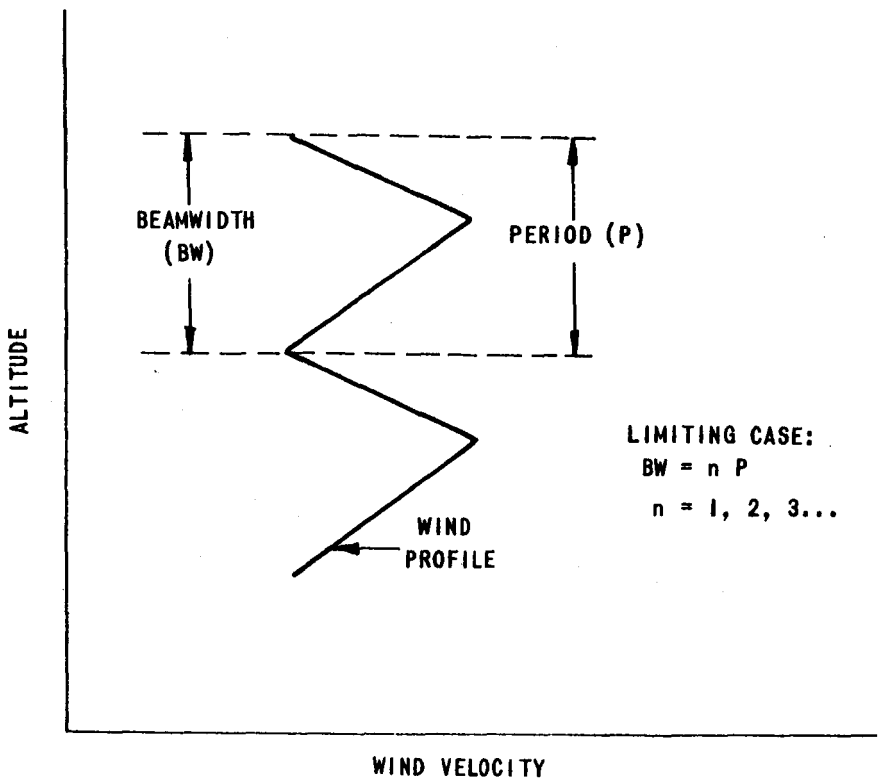

Figure 15 PERIODIC WIND PROFILE - RADAR SCAN

A real-time presentation of median velocity, the principle system measurement, can be accomplished by utilizing inputs which will already be computed. The output frequency of the error signal feeding the VFO in the median frequency sensor is proportional to the median frequency; the altitude is already computed in the constant altitude tracker. These signals vs. altitude along with the output of the R-meter can be plotted on an x-y recorder as part of the operational display. Such a presentation would be useful in prescribing altitudes of unusual interest where complete spectrum processing might be advisable or where prolonged sampling is desirable. Additionally all "raw" frequency data should be magnetically taped for storage and subsequent analysis as desired.

G. SYSTEM ERROR ANALYSIS

One the basis of anticipated performance characteristics of the wind-measurement equipment, an error analysis of the over-all system was made. The analysis, as summarized in Tables 4, 5 and 6, describes the accuracy in measuring absolute wind velocity at a given level and wind shear between levels. A detailed discussion of each factor contributing to velocity and height errors is contained in Appendix B.

As shown in Table 6, all errors combine in such a way that 90% of the time (actually more frequently, since calculations were based on the altitude that maximized the error in question) the proposed system will measure absolute wind velocity in the horizontal plane to approximately 2 m/sec and the vertical wind shear to $1.7/\Delta h \sec^{-1}$ where Δh is the increment of interest in meters. Table 4 indicates that 90% of the time the error in measurement of the horizontal component of velocity by one radar is 0.6 m/sec.

It should be noted that absolute wind velocity in the horizontal plane can be measured with a probable error accuracy of 0.9 m/sec, which compares favorably with the contractually specified accuracy of 1.5 m/sec probable error.

While the proposed radar system does not feature the simplicity and economy of more standard wind measurement techniques, it does combine the

advantages of fine spatial resolution, accuracy, "real-time" presentation, wind variability detection, and all-weather performance.

Table 4

90% CONFIDENCE LIMITS IN THE MEASUREMENT OF RADIAL COMPONENTS V_r OF WIND VELOCITY

(Computed at 25 miles slant range)

Source of Error	Contribution to Total Error
1) Sampling time	± 30 cycles*
2) Fall velocity of chaff	10 cycles
3) Vertical velocities in wind	8 cycles
4) Nonmonotonic wind variation	20 cycles
5) Inaccuracies in pointing direction	1 cycle
6) Instability of electronic instrumentation	1 cycle

Total error, $EV_r = \sqrt{\Sigma_i E_i^2}$ = ± 38 cycles (±0.57 m/sec)

*At X-band frequencies, the velocity conversion factor is approximately 60-67 cycles per m/sec.

Table 5

90% CONFIDENCE LIMITS IN DETERMINING THE ALTITUDE (h) AT WHICH COMPONENT VELOCITY MEASUREMENTS ARE MADE

(Computed at 25 miles slant range)

Source of Error	90% (±) Error in Absolute Height Measurements (meters)
1) Boresight Accuracy	23
2) Range Accuracy	4
3) Propagation Effects	12
4) Nonuniform Chaff Distribution	10
Total Height Error Eh	28

Table 6

90% CONFIDENCE LIMITS IN HORIZONTAL WIND SPEED CALCULATED FROM MEASUREMENTS OF TWO RADIAL COMPONENTS

Source of Error	Contribution to Total Error
1) Measurement of Components	0.72 m/sec x sec ϕ
2) Mismatch in altitudes sampled by the two radars	2.2 m/sec x sec ϕ
Total Error EV =	2.3 m/sec x sec ϕ

The error in shear: $ES = \frac{1.7}{\Delta h} \sec^{-1}$

III. BUFFALO WIND MEASUREMENT EQUIPMENT

In order to (a) evaluate the proposed Doppler radar-chaff concept for measuring winds aloft, (b) determine suitable radar components for an optimum system, and (c) acquire wind shear data of high resolution, appropriate field experiments were conducted in Buffalo. Chaff was released from an aircraft in a steep dive and the resultant continuous column sampled with the CAL Doppler radar. Oil-smoke was simultaneously released from the aircraft and photographed with two spaced ground cameras to provide comparative wind velocity data. The local U.S. Weather Bureau made special radiosonde releases at times coincident with the experiments to provide a third wind profile.

Numerous balloon-chaff drops and tracking experiments with an SCR-584 radar were conducted earlier to assist in defining chaff reflectivity characteristics and radar tracking problems. A series of Doppler radar-chaff experiments was also made at Mt. Withington, New Mexico.

Some of the more unique equipment developed or techniques employed in support of the wind measurement program are discussed in succeeding paragraphs.

A. AIRCRAFT CHAFF DISPENSER AND SMOKE GENERATOR

Existing chaff dispensers were surveyed in the hopes of obtaining a unit that could be modified for use in a CAL aircraft. Without exception, all available chaff dispensers were found to be the type in which individual containers of chaff are sequentially ejected at command. If such a dispenser is to produce a continuous column of chaff after a short diffusing time, the packages must be ejected at a high rate. The maximum ejection rate of the machines surveyed is 600 packages per minute. The larger dispensers feed packages which are connected by tapes in the manner of a machine gun and its linked cartridge belt. These units can hold a large quantity of chaff but are intended for operation in level flight and will not function properly in a steep dive. Newer dispensers, while capable of functioning in any attitude, were found to be prohibitively large and, in the necessary rapid ejection modes, forced to expell unrealistically large concentrations of chaff.

For these reasons, it was decided to design and fabricate a continuous chaff dispenser tailored to the program objectives. The resultant dispenser, shown schematically in Figure 16, is insensitive to anticipated aerodynamic forces and accelerations. The cartridge box, which measures 2 in. x 4 in. x 20 in., holds approximately 8 lbs of Revere aluminum chaff or 6 lbs. of Suchy metallized nylon chaff. Ejection is accomplished by motion of a piston actuated by a simple screw-jack. The screwjack is connected to the variable speed electric motor through a gear train whose ratio can be changed on the ground. The motor speed can also be varied ±50% by the pilot. Thus, the combination of variable motor speed and gear selection provides a wide range of ejection rates. The design also permits variations in chaff material, thickness, density, etc.

The chaff, after being extruded from the cartridge, is directed into the free air stream by a high-speed air blast generated by a centrifugal blower and a small supersonic nozzle. The centrifugal blower serves a second purpose, that of cutting up and ejecting the paper separators that are required to pack the chaff into the cartridge. Tests indicated that "birdnesting" is almost completely eliminated by the action of the supersonic jet. The nozzle has been designed to flow .05 lbs/sec (of air) from a 0.5 cubic foot capacity pneumatic bottle stored in the aft end of the belly tank. Pneumatic regulators and valves control the flow. The blower and supersonic jet are automatically turned on when the screw-jack motor is operated. Several chaff releases may be made during a single flight.

It was desired to simultaneously generate smoke trails during the tests for two purposes, (1) to aid the radar operators in locating the test airplane and chaff column, and (2) to compare the wind velocities obtained by Doppler radar measurement of chaff movement with a velocity profile obtained from optical measurements of the smoke trail displacement.

Figure 17 illustrates the operation of the smoke generator designed for these purposes. The oil is stored in an accumulator under pressure. When the control is switched on by the pilot, the solenoid valve opens and high pressure oil from the accumulator sprays into the hot engine exhaust manifold to produce a dense white smoke.

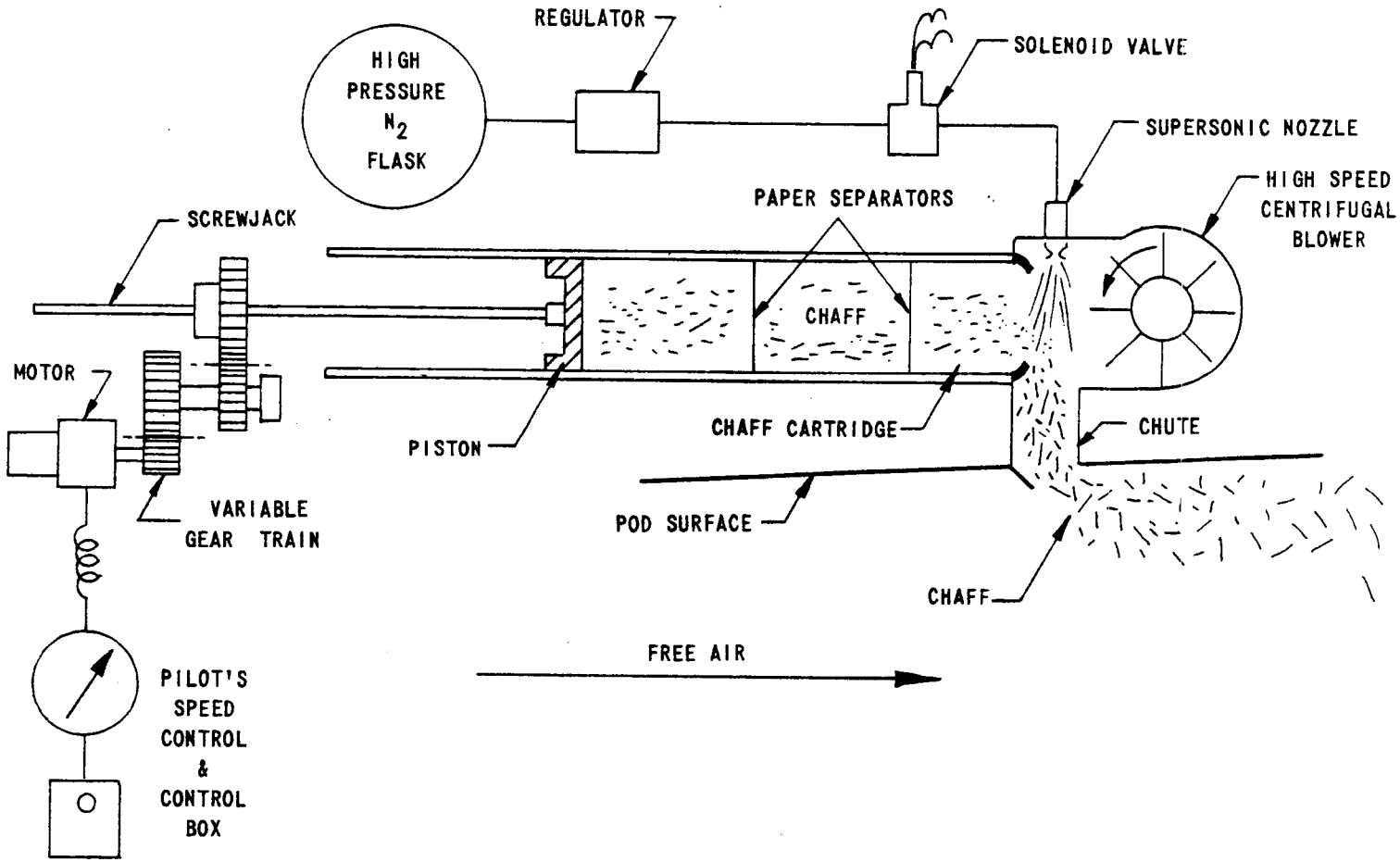

Figure 16 CAL CHAFF DISPENSER

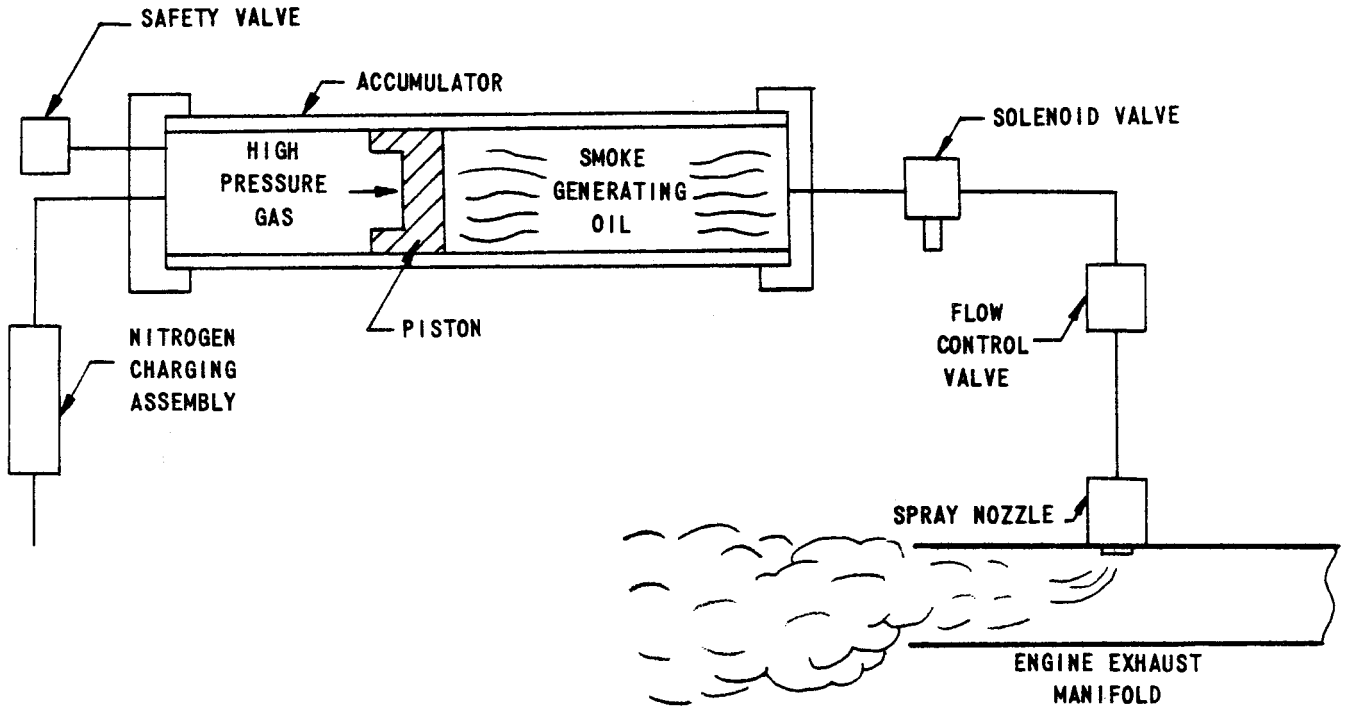

Figure 17 SMOKE GENERATING SYSTEM

B. FLIGHT TEST OPERATION

An F8F aircraft, pictured in Figure 18 with the belly tank containing the chaff dispenser and smoke generator, was selected for the flight program. The basic maneuver involved the dispersal of chaff and smoke with the aircraft in an 8000 ft., 45° dive commencing at 20,000 ft.

The test area for the maneuver was approximately 5-10 miles northwest of the radar site at Newstead. One camera site was adjacent to the radar unit and the other camera site was located at the Laboratory, approximately 9 miles west-south-west of Newstead. A description of the photographic technique employed is given in Progress Report 1.

C. DOPPLER RADAR

The Doppler radar used in project experiments both at Mt. Withington and in Buffalo is pictured in Figure 19. Characteristics of this pulsed Doppler System, termed the DOP radar, are presented below:

Power	-	5 kw peak
PRF	-	6 - 10 kc variable
Pulse Width	-	0.5, 1, or 2 μ sec
Antenna	-	8 - foot parabolic ($\approx$ 1° beam)
Frequency	-	X-band, 9310 mc
Range Gate	-	1 - 5 μ sec, 0 - 20 miles.

Doppler information from the chaff targets was (1) fed into a spectrum analyzer* and the resultant frequency spectra photographed and (2) recorded on magnetic tape for subsequent processing with an IBM-704 computer. Target position data were simultaneously recorded.

*Panoramic Spectrum Analyzer, Panoramic Electronics, Inc., Mt. Vernon, N.Y.

Figure 18 F8F (G-58B) AIRPLANE

Figure 19 CAL DOPPLER RADAR

IV. EXPERIMENTAL DATA

A. BUFFALO WIND MEASUREMENTS

The major wind-measurement experiments conducted in Buffalo are indicated below.

Table 7

WIND MEASUREMENT EXPERIMENTS - Buffalo, N. Y.

	Date	Measurements	Altitude
a)	6 October 1961	Smoke Measurements Only	4500 - 6500 m MSL
b)	8 December 1961	Chaff and Smoke Measurements	1780 - 2260 m MSL
c)	16 December 1961	Chaff and Smoke Measurements	1600 - 3300 m MSL

The flight of 6 October was intended solely to check out the smoke dispensing and analysis procedures. Resultant velocity and shear profiles, in 100 ft steps, have since been constructed by NASA. A comparison of the velocity data with radiosonde winds for three common levels is presented in Table 8. The agreement between the two independent wind measures is surprisingly good in view of the time and sampling differences involved.

(1) 8 December 1961 Experiment

Figure 20 shows the smoke trail, 60 and 90 seconds after initiation of the aircraft dive in the experiments of 8 December. Figure 21 shows a sequence of radial velocity distributions recorded with the radar on the same experiment.

Chaff motions were acquired with the DOP radar at the lower 500 meters of the aircraft dive, where corresponding smoke trail information was not available. Hence, the Doppler data were compared with radiosonde winds, as shown in columns 9 and 10 of Table 9 . From the known pointing direction of the radar, the radial velocity component of the horizontal wind vector (radiosonde) was calculated and compared with the radar measured wind. As indicated,

TABLE 8

COMPARISON OF SMOKE TRAIL AND RADIOSONDE WIND DATA

ALTITUDE	1200 EST SMOKE TRAIL WINDS - DEGREES/FT PER SEC				OVERALL AVERAGE	RADIOSONDE WINDS DEGREES/FT PER SEC		
	AVERAGING TIME							
	10 SEC	20 SEC	30 SEC	40 SEC		0800 EST	1400 EST	2000 EST
16,000 FT	288/33.2	289/33.5	289/33.5	288/33.1	288/33.4	300/38.9	280/32.1	280/23.7
18,000 FT	287/34.7	286/34.4	286/34.5	288/34.1	287/34.5	290/33.8	290/38.9	300/25.4
20,000 FT	330/27.8	330/26.4	329/26.2	329/26.3	330/26.9	310/30.4	300/45.6	280/16.9

Figure 20 SMOKE TRAIL (8 DEC. 1961) 60 AND 90 SECONDS AFTER INITIATION OF AIRCRAFT DIVE

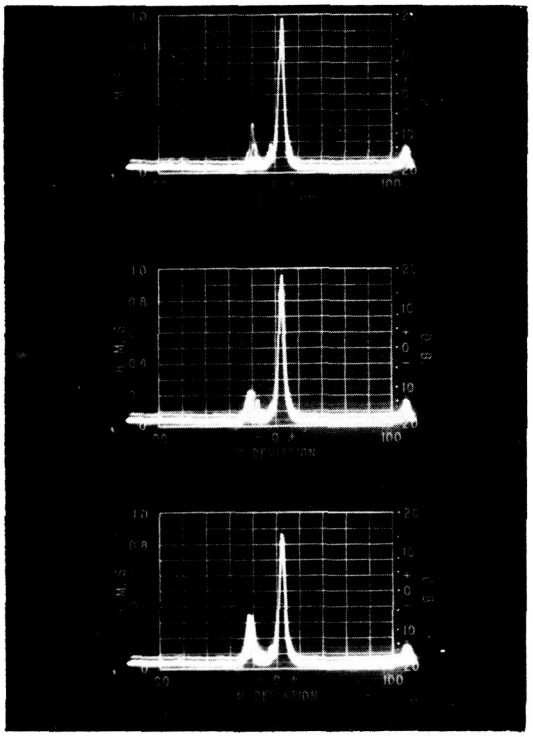

NOTES:

a) DOPPLER FREQUENCY (VELOCITY) SPECTRUM APPEARS TO THE LEFT OF THE CARRIER REFERENCE FREQUENCY

b) EACH DIVISION ALONG THE X-AXIS CORRESPONDS TO APPROXIMATELY 4.5 MPS. ZERO VELOCITY IS AT THE CARRIER FREQUENCY

c) VELOCITIES INDICATED ARE THE COMPONENTS IN THE POINTING DIRECTION OF THE RADAR

Figure 21 SEQUENCE OF WIND (CHAFF) VELOCITY SPECTRA WITH CAL DOPPLER RADAR (8 DECEMBER 61)

Table 9

WIND SHEAR EXPERIMENT I - 8 DECEMBER 1961

(Tabulated Data)

(1)	(2)	(3)	(4)	(5)	(6)	(7)	(8)	(9)	(10)
		SAMPLING VOLUME POSITION			RADAR POINTING DIRECTION			RADIOSONDE	
DATA BLOCK	ALTITUDE (MSL) m	HEIGHT OF SAMPLING VOL.	SLANT RANGE METERS	DISTANCE MILES	ELEV. ANGLE	AZ. ANGLE	RADIOSONDE WIND VECTOR Deg./mps	WIND VELOCITY IN RADAR DIRECTION	DOPPLER RADIAL VELOCITY m/sec
1	1930 m	120 m	5374 m	3.3 mi	13.4°	328.9°	287/ 9.3	- 7 m/sec*	- 8.5 m/sec*
2	1930 m	120 m	5374 m	3.3 mi	13.4°	328.9°	287/ 9.3	- 7 m/sec	- 8.0 m/sec
3	1787 m	120 m	5661 m	3.5 mi.	11.9°	331.8°	293/ 9.4	- 7 m/sec	- 6.0 m/sec
4	1823 m	110 m	5124 m	3.2 mi.	11.5°	331.8°	292/ 9.2	- 7 m/sec	- 6.5 m/sec
5	1895 m	110 m	4444 m	2.8 mi.	12.6°	338.6°	289/ 9.2	- 6 m/sec	- 7.0 m/sec
6	1966 m	120 m	3979 m	2.5 mi.	15.3°	340.3°	285/ 9.5	- 5 m/sec	- 6.5 m/sec
7	2038 m	140 m	3442 m	2.1 mi.	18.7°	344.3°	282/10.2	- 5 m/sec	- 6.0 m/sec
8	2217 m	150 m	4301 m	2.7 mi.	19.1°	347.1°	282/10.5	- 4 m/sec	- 7.5 m/sec
9	2253 m	150 m	3764 m	2.3 mi.	20.6°	350.0°	284/10.3	- 4 m/sec	- 7.5 m/sec
10	2217 m	150 m	3728 m	2.3 mi.	21.0°	352.3°	282/10.5	- 3 m/sec	- 7.0 m/sec
11	2217 m	150 m	3335 m	2.1 mi.	22.1°	00.2°	282/10.5	- 2 m/sec	- 5.5 m/sec
12	2181 m	150 m	3013 m	1.9 mi.	23.7°	17.3°	279/10.6	+ 1 m/sec	---
13	2181 m	180 m	5989 m	3.7 mi.	25.9°	34.4°	279/10.6	+ 4 m/sec	---
14	2038 m	150 m	3370 m	2.1 mi.	20.6°	59.4°	282/10.2	+ 7 m/sec	+ 5.5 m/sec
15	2110 m	150 m	3442 m	2.1 mi.	20.2°	67.9°	279/10.5	+ 8 m/sec	+ 7.0 m/sec
16	2074 m	140 m	3764 m	2.3 mi.	19.9°	77.6°	280/10.3	+ 9 m/sec	+ 7.0 m/sec
17	2110 m	120 m	5947 m	3.7 mi.	11.5°	91.3°	279/10.5	+10 m/sec	+12.5 m/sec
18	2002 m	110 m	6162 m	3.8 mi.	11.1°	93.6°	283/ 9.8	+10 m/sec	---

*The minus sign indicates a radial wind velocity toward the radar and a plus sign a wind away from the radar.

agreement between the two independent measures of wind velocity is good. Attention should be called to the fact that the Doppler measurement represents velocities averaged over a height increment of approximately 150 m (a median frequency sensor for isolating the velocity at the center of the radar beam has yet to be incorporated in the radar) whereas the radiosonde winds are averaged over height intervals twice as large.

An expression for determining the horizontal-plane wind vector with a single Doppler radar was formulated. The method involves combining two radial velocity measurements obtained with the radar at different azimuth angles but at constant altitude. It must be assumed that no time or space variations of wind occur between component measurements. The geometric relationship is given in Figure 22.

The foregoing relationship was used to estimate the horizontal wind vector (V) from appropriate radial velocity measurements (Table 9); the results and comparison with radiosonde winds are shown below.

Paired Data	Altitude	Calculated Wind Vector	Radiosonde Wind Vector
1 and 6	1930 m-1966 m	288°/10.7 m/sec	286°/ 9.4 m/sec
7 and 14	2038 m	292°/ 9.4 m/sec	282°/10.2 m/sec

(2) 16 December 1961 Experiments (II and III)

The resolved Doppler data from these two experiments are listed in Table 10 with corresponding radiosonde data and smoke trail data where available. The reliability of the radar data on this day is considered less certain, owing to equipment difficulties experienced in the recording of Doppler signal and antenna position. Nevertheless, the three wind measures indicate general agreement. The magnitude of observed differences does not appear to exceed that due to inherent differences in sampling technique (space and time averages) of each system, different periods of measurement, and individual system accuracy.

APPLICABLE TO SINGLE DOPPLER OPERATION

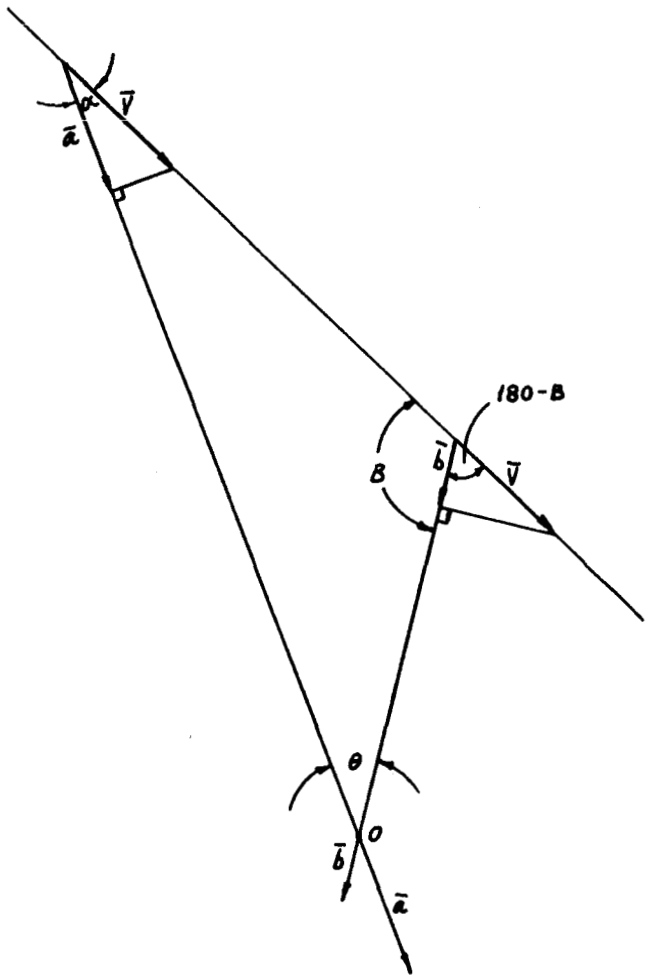

PLAN VIEW WITH RADAR AT ORIGIN O

$\bar{a}$ AND $\bar{b}$ ARE VELOCITY VECTORS IN THE HORIZONTAL PLANE OBTAINED BY MULTIPLYING THE CORRESPONDING MEASURED RADIAL VELOCITY BY THE SECANT OF THE ELEVATION ANGLE.

1. $Comp_{\bar{a}}\ \bar{V} = a = V \cos\alpha$

2. $Comp_{\bar{b}}\ \bar{V} = b = V \cos(180-B)$

SINCE $\theta + \alpha + B = 180$, $(180-B) = \theta + \alpha$

3. $b = V(\cos\theta \cos\alpha - \sin\theta \sin\alpha)$

SOLVING (1.) AND (3.) FOR α,

$\frac{b}{a} = \cos\theta - \sin\theta \tan\alpha$, AND

4. $\tan\alpha = \frac{(\cos\theta - \frac{b}{a})}{\sin\theta}$

5. $V = \frac{a}{\cos\alpha}$

6. WIND DIRECTION = AZIMUTH$_{\bar{a}}$ $- \alpha$

THUS, EQUATIONS (4.), (5.) AND (6.) ENABLE CALCULATION OF HORIZONTAL WIND MAGNITUDE AND DIRECTION FROM TWO MEASURED VELOCITY COMPONENTS AND THE INCLUDED ANGLE.

Figure 22 WIND VELOCITY DETERMINATION FROM TWO RADIAL VELOCITY COMPONENTS OBTAINED AT DIFFERENT AZIMUTH ANGLES (CONSTANT ALTITUDE)

Table 10

WIND SHEAR EXPERIMENTS II AND III - 16 DECEMBER 1961

	WIND SHEAR EXPERIMENT II				WIND SHEAR EXPERIMENT III			
DATA BLOCK	ALTITUDE (MSL) m	RADIOSONDE RADIAL VELOCITY m/sec	DOPPLER RADIAL VELOCITY m/sec	SMOKE TRAIL RADIAL VELOCITY m/sec	ALTITUDE (MSL) m	RADIOSONDE RADIAL VELOCITY m/sec*	DOPPLER RADIAL VELOCITY m/sec*	SMOKE TRAIL RADIAL VELOCITY m/sec*
1	2912 m	-11 m/sec	---	-12.0 m/sec	2256 m	- 8 m/sec	- 7 m/sec	---
2	2720 m	-10 m/sec	-10.5 m/sec	-10.5 m/sec	2448 m	- 8 m/sec	- 8.0 m/sec	- 7.0 m/sec
3	2496 m	- 9 m/sec	- 6.5 m/sec	- 8.0 m/sec	2608 m	- 8 m/sec	- 8.0 m/sec	- 8.0 m/sec
4	2016 m	- 7 m/sec	- 5.5 m/sec	---	3216 m	-11 m/sec	---	-12.0 m/sec
5	1824 m	- 4 m/sec	---	---	3184 m	-10 m/sec	- 9.0 m/sec	-12.5 m/sec
6	1760 m	- 3 m/sec	- 5.0 m/sec	---	3248 m	-10 m/sec	- 8.5 m/sec	-12.0 m/sec
7	1744 m	- 3 m/sec	- 5.0 m/sec	---	3312 m	-10 m/sec	- 8.5 m/sec	-12.5 m/sec
8	1696 m	- 2 m/sec	- 5.0 m/sec	---	3152 m	- 8 m/sec	- 6.0 m/sec	-10.5 m/sec
9	1728 m	- 2 m/sec	- 4.5 m/sec	---	3120 m	- 7 m/sec	- 6.0 m/sec	- 9.5 m/sec
10	1680 m	- 2 m/sec	- 5.5 m/sec	---	3072 m	- 7 m/sec	- 5.0 m/sec	- 8.0 m/sec
11	2048 m	- 7 m/sec	- 4.0 m/sec	---	2848 m	- 4 m/sec	- 3.0 m/sec	- 4.0 m/sec
12	2160 m	- 7 m/sec	- 3.5 m/sec	---	3152 m	- 5 m/sec	- 3.0 m/sec	- 7.5 m/sec
13	2224 m	- 6 m/sec	---	---	3104 m	- 2 m/sec	---	- 3.5 m/sec
14	2256 m	- 6 m/sec	- 4.5 m/sec	---	2640 m	- 1 m/sec	0	- 0.5 m/sec
15	2384 m	- 6 m/sec	- 4.0 m/sec	- 4.5 m/sec	2528 m	< - 1 m/sec	---	0
16	2400 m	- 5 m/sec	- 4.0 m/sec	- 5.0 m/sec	2416 m	< - 1 m/sec	+ 2.5 m/sec	+ 1.5 m/sec
17	2464 m	- 6 m/sec	- 3.5 m/sec	- 4.0 m/sec	2352 m	0	+ 2.0 m/sec	+ 1.5 m/sec
18	2544 m	- 5 m/sec	- 3.5 m/sec	- 4.5 m/sec	2240 m	< + 1 m/sec	+ 2.5 m/sec	---
19	2608 m	- 4 m/sec	- 3.5 m/sec	- 3.5 m/sec	2160 m	< + 1 m/sec	+ 5.0 m/sec	---
20	2912 m	- 4 m/sec	- 4.0 m/sec	- 5.5 m/sec	2144 m	< + 1 m/sec	+ 5.0 m/sec	---
21	2544 m	+ 2 m/sec	0	+ 2.0 m/sec	2032 m	< + 1 m/sec	+ 5.0 m/sec	---
22	2592 m	+ 2 m/sec	---	+ 3.0 m/sec	1952 m	+ 1 m/sec	---	---
23	2672 m	+ 3 m/sec	---	+ 3.5 m/sec	1776 m	+ 2 m/sec	---	---
24	2944 m	+ 3 m/sec	---	+ 2.5 m/sec	1632 m	+ 2 m/sec	---	---
25	2592 m	+ 9 m/sec	+11.0 m/sec	+ 9.5 m/sec	1744 m	+ 2 m/sec	---	---
26	2592 m	+ 9 m/sec	+11.5 m/sec	+ 9.5 m/sec	2128 m	+ 3 m/sec	---	---
27	2560 m	+10 m/sec	---	+ 9.0 m/sec	2192 m	+ 5 m/sec	---	---
28					2448 m	+ 7 m/sec	+10.0 m/sec	+ 8.5 m/sec

*The minus sign indicates a radial wind velocity toward the radar and a plus sign a wind away from the radar.

B. MT. WITHINGTON EXPERIMENTS

During the period 1-5 September 1961, five experimental chaff tracking runs were performed with the DOP radar, then located at Mt. Withington, New Mexico in conjunction with another Laboratory project. For these experiments, chaff was released from radiosonde balloons, tracked with the DOP radar, and photographs taken of the spectrum analyzer display of Doppler frequencies characteristic of wind velocity.

The reduced data appear in Table 11 and the graphical results are presented in Figures 23 and 24. Wind velocities in the horizontal plane, calculated from measured mean radial velocities and recorded elevation angles of the radar, are plotted as a function of height in the graphs. The number under each plotted point refers to the horizontal distance in kilometers between the sampled volume and the radar.

An approximate, independent measure of average wind velocity was obtained by determining the change in horizontal distance to the chaff cloud versus time. The averaging time for sensing chaff cloud displacement varied between 4 and 10 minutes in contrast to the 0.5 - 2 seconds required to obtain each Doppler spectrum. The resultant chaff cloud velocities are represented by dashed lines in Figures 23 and 24. The agreement between these approximate velocities and the Doppler-measured velocities is considered reasonably good in light of (1) the difference in time scales of the two measurement techniques, (2) accuracy of timing procedures, and (3) inability to sense with an A-scope (the radar's video position indicator) the <u>same</u> portion of the diffuse chaff cloud for relatively long periods of time, a necessity for accurate displacement measurements.

The results of this initial set of experiments demonstrated that wind velocity information could be obtained by tracking a chaff cloud with Doppler radar. The spread of plotted velocities at any given altitude level provides an indication of the variations of wind with time and in space. The last column of Table 11 shows the range of radial velocities contained in each frequency spectrum.

Table 11

WIND VELOCITY DETERMINATIONS WITH DOPPLER RADAR AND CHAFF - MT. WITHINGTON, NEW MEXICO

Photograph	Time	Height (km)	Horiz. Distance (km)	Radial Vel. V_r (m/sec)	Horizontal Vel. V_h (m/sec)	Radial* Velocity Spread (m/sec)
Run #1 - 1 September 1961						
1a	1:21	0.6	0.9	5.6	6.7	5.2
b	1:22	0.6	1.1	5.6	6.3	4.1
c		0.7	1.3	5.6	6.3	4.1
2a		0.7	1.3	5.8	6.5	3.6
b		0.7	1.5	5.6	6.1	3.1
c		0.7	1.7	6.1	6.5	2.0
3a	1:25	0.6	2.0	5.6	5.8	2.3
b		0.6	2.2	5.6	5.8	2.3
c		0.6	2.3	4.9	5.1	0.4
4a		0.6	2.5	6.3	6.5	1.8
b		0.6	2.6	6.4	6.6	1.5
c		0.6	2.9	data fade		
Run #2 - 4 September 1961						
1a		0.6	2.5	3.7	3.8	3.8
b	4:31	0.7	2.6	6.3	6.5	3.8
c	32	0.8	3.2	7.0	7.2	2.3
2a	33	0.5	3.7	8.7	8.8	3.6
b	34	0.4	2.7	6.8	6.9	--
c	4:35	0.6	4.0	7.5	7.6	3.1
Run #3 - 4 September 1961						
3a	5:10	1.2	1.7	5.8	7.0	1.2
b		1.2	1.9	6.0	7.0	3.6
c		1.1	2.0	6.8	7.7	2.8
4a		1.0	2.4	7.3	7.9	2.6
b		1.0	2.5	data fade		
c		1.0	3.2	7.5	7.8	1.8
5a		1.0	3.4	7.5	7.8	2.6
b		0.9	3.6	7.3	7.5	2.3
c	5:15	0.9	3.8	8.0	8.2	3.7
6a		0.9	4.6	7.3	7.4	3.1
b		0.9	4.6	7.5	7.6	--
c	5:19	0.7	5.0	7.7	7.8	1.8

Table 11 (Contd.)

Photograph	Time	Height (km)	Horiz. Distance (km)	Radial Vel. V_r (m/sec)	Horizontal Vel. V_h (m/sec)	Radial* Velocity Spread (m/sec)
Run #4 - 5 September 1961						
1a	9:14	1.5	1.7	3.9	5.2	5.5
b	9:15	1.5	1.9	3.2	4.1	1.8
c		1.4	2.1	4.5	5.4	3.9
2a		1.4	2.6	4.8	5.4	4.7
b		1.4	2.6	4.8	5.4	3.6
c		1.3	2.9	4.4	4.9	4.7
3a		1.3	3.1	4.6	5.0	4.4
b		1.3	3.2	4.6	5.0	1.6
c	9:18	1.3	3.4	4.6	4.9	3.9
4a		1.3	3.5	5.1	5.4	5.2
b		1.3	3.5	5.1	5.4	3.6
c	9:20	1.3	3.7	5.1	5.4	4.4
5a		0.9	4.7	No Return	--	--
b		1.0	5.0	4.6	4.7	--
c	9:25	1.0	5.3	No Return	--	--
Run #5 - 5 September 1961						
7a	11:35	1.0	1.3	1.4	1.8	--
b		0.9	1.4	1.5	1.8	1.2
c		0.8	1.4	1.9	2.2	1.5
8a	11:38	0.8	1.6	2.4	2.7	2.0
b		0.8	1.6	2.9	3.3	2.3
c		0.8	1.6	3.3	3.7	3.1
9a		0.9	1.9	3.1	3.4	3.6
b		0.9	1.9	2.9	3.2	3.1
c	11:40	0.9	1.9	2.4	2.7	2.3
10a	41	1.0	2.0	2.9	3.2	3.3
b	41	1.0	2.0	2.9	3.2	4.1
c	42	1.0	2.0	2.9	3.2	3.9
11a	43	1.0	2.2	2.7	3.0	4.1
b	43	1.0	2.2	2.4	2.7	2.8
c	43.5	1.0	2.2	2.9	3.2	3.9
12a	44	1.1	2.3	3.4	3.8	3.3
b		1.1	2.3	2.9	3.2	4.1
c	45	1.1	2.3	2.7	3.0	2.8

*Corrected for 0.6 m/sec spectrum spreading due to spectrum analyzer response characteristics.

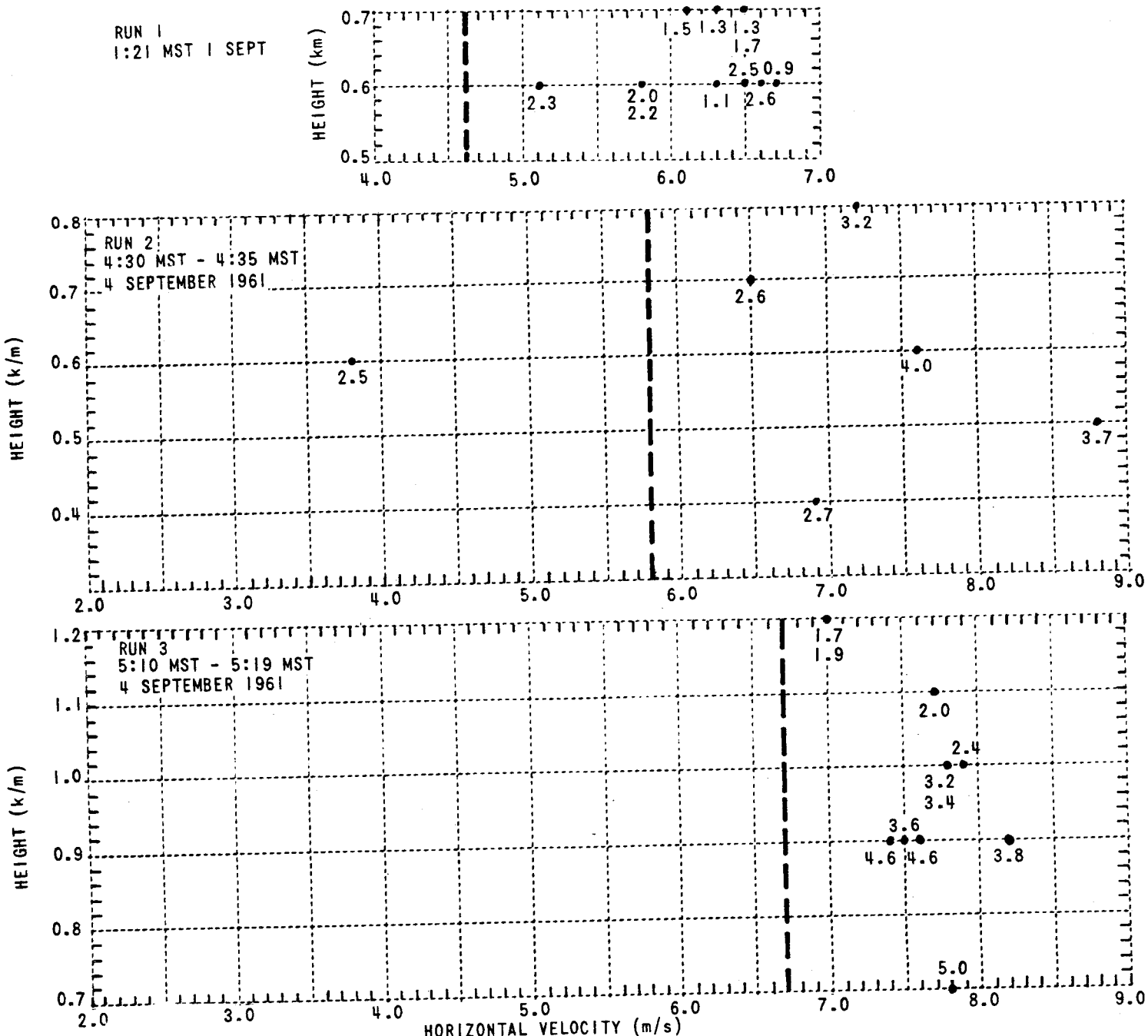

Figure 23 DOPPLER RADAR MEASUREMENTS OF WIND VELOCITY

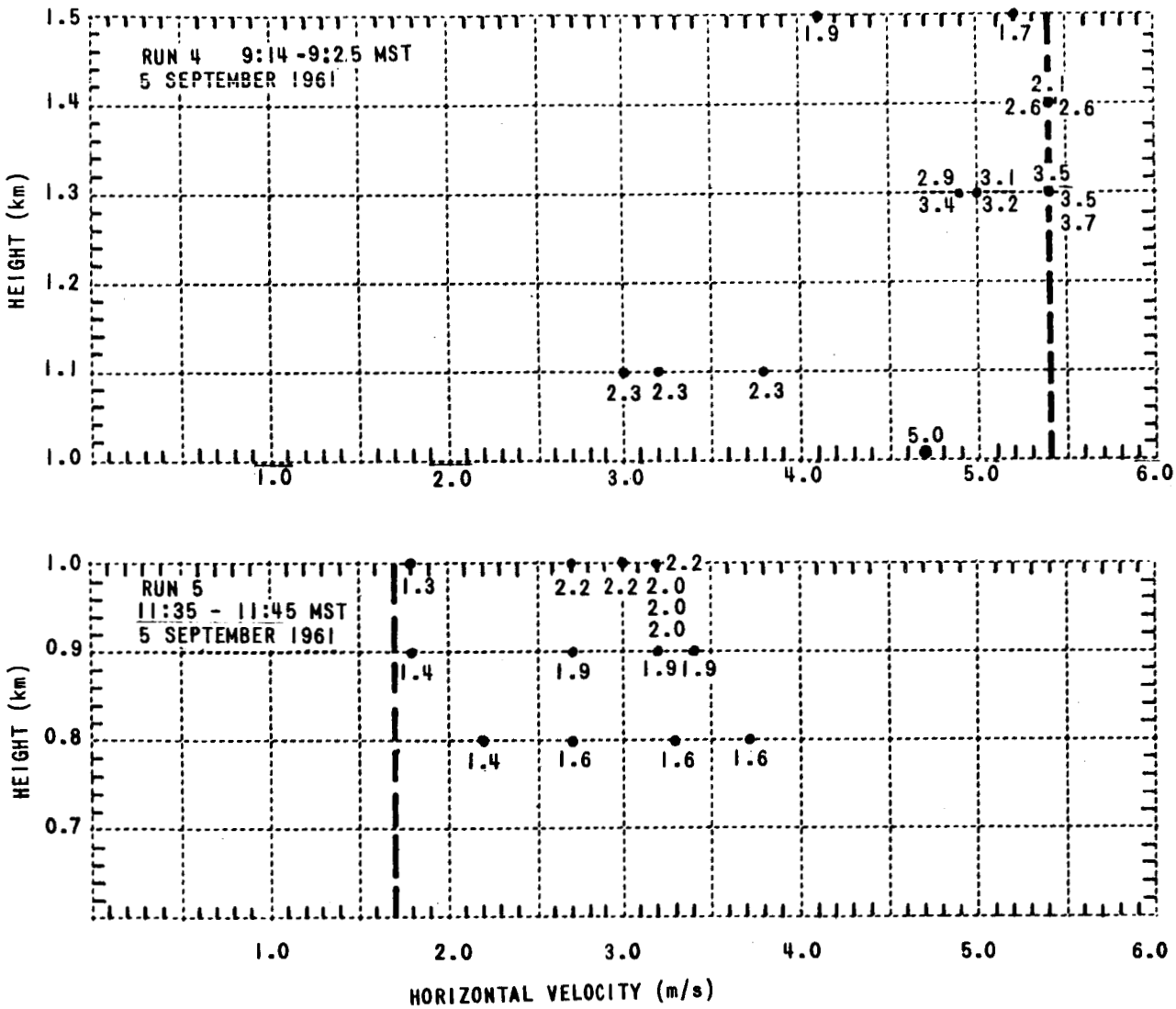

Figure 24 DOPPLER RADAR MEASUREMENTS OF WIND VELOCITY

V. SUMMARY

Design concepts were formulated and evaluated for a high resolution (30 m altitude increment) wind measurement concept involving two Doppler radars and a continuous chaff column for rapidly constructing the wind profile from ground to 15 km altitude. The investigation included theoretical interpretation of Doppler spectra, suitable measurement techniques and apparatus for achieving desired sampling capability, and field experiments wherein the general concept was assessed. These simultaneous efforts have led to the following conclusions:

1. The Doppler radar - chaff concept, as devised, is feasible for obtaining wind information of desired accuracy (0.5 - 1.5 m/sec) and spatial resolution (30 m altitude increments). Required equipment to meet these specifications cannot be considered simple or inexpensive; 45 ft. to 60 ft. diameter antennas, radar transmitters of demanding design, and a unique rocket chaff dispenser are called for. Nevertheless, the envisioned system appears capable of providing, in "real time" and regardless of weather conditions, unique atmospheric wind structure information.

2. The concept incorporates three measures of wind characteristics:

a. A central measure of velocity (median velocity) which, with the twin-filter discriminator proposed, is precisely the velocity at the center of the radar beam when the wind varies monotonically with height within the beam.

b. Wind variance, (σ^2) of the velocity distribution as reflected by an R-meter.

c. Turbulence information based on the observed spectrum shape and wind shear values determined from median velocity measurements. (Precise quantitative data on turbulence require additional investigation of the interpretation of Doppler spectral components as discussed in Appendix C).

3. An error analysis of the envisioned system indicated that absolute wind velocity in the horizontal plane could be measured with a probable error accuracy of 0.9 m/sec, and that 90% of the time wind shear could be measured with an accuracy of 1.7 m sec^{-1} for a 30 m scale height.

4. It is necessary that the length of record (radar dwell time) be of approximately 1.7 seconds duration for each sampling period when detailed spectrum analysis of 30 cps resolution is desired. The time needed for median frequency sensing is dependent upon spectrum shape; for a Gaussian distribution it is less than 0.3 seconds for more than 99% of the spectrum widths to be encountered.

5. Calculations are given for converting radial velocities sensed by two separated radars into the horizontal-plane wind vector. Errors in this triangulation procedure are minimized if the two radar beams form a right angle and the wind is blowing in a direction parallel to one radar beam. This fact should be considered in any subsequent field program where the radars should be favorably positioned with respect to prevailing wind direction.

6. Theoretical calculations and chaff tracking experiments have shown that 3 to 5 pounds of chaff (approximately 4 million X-band dipoles per pound) are required per 15 km high column. This concentration is considered suitable in terms of detectable signal return and adequate statistical representation of wind velocities within a sampled volume.

Field programs were conducted in which a single Doppler radar was used to sense the motion of chaff columns. Comparative measurements of wind velocity were provided by the Doppler radar, smoke-trail photography, and conventional radiosondes; the data on average wind velocity were in general agreement. The radar-chaff technique provided additional information on the spectrum of velocities encountered and the time variations of wind.

It is recommended that further theoretical and experimental research be pursued to (1) similarly establish the procedures for utilizing Doppler radar as a turbulence sensor and (2) acquire wind structure information (detailed space and time fluctuations) not readily obtainable with other methods. A brief discussion of these areas, which are intimately linked with missile design and guidance, is included in Appendix C.

VI. REFERENCES

1. Proposal to conduct a program for the Development of Equipment for Acquiring High Resolution Measurements of Wind Velocity and Vertical Wind Shear in the Troposphere, Cornell Aeronautical Laboratory Proposal No. 484, 19 August 1960.

2. Barr, William C., "Theoretical Evaluation of Cylindrical Chaff as a Wind Sensor," U.S. Army Signal Research and Development.

3. Panofsky, H.A., "Large Scale Vertical Velocity and Divergence," Compendium of Meteorology, 1951.

4. Project Wind Shear, Progress Report No. 1, CAL, 5 June 1961.

5. Scoggins, James R., and Vaughan, William W., "Cape Canaveral Wind and Shear Data (1 thru 80 km) for Use in Vehicle Design and Performance Studies," NASA TN D-1274.

6. Rutkowski, W., and Fleisher, A., "R-meter: An Instrument for Measuring Gustiness," M.I.T. Weather Radar Research Report No. 24, 1955.

7. Rogers, R.R., "Radar Measurement of Gustiness," M.I.T. Weather Radar Report 29, 1957.

8. Rice, S.O., "Mathematical Analysis of Random Noise," in Selected Papers on Noise and Stochastic Processes (ed. N. Wax), Dover Publications, New York, 1954.

9. Blackman, R.B., and Tukey, J.W., "The Measurement of Power Spectra," Dover Publications, New York, 1959, p. 148.

10. Technical Proposal for Rocket Chaff Dispenser, Nortronics (Northup Corporation), NSS Report No. 987, 15 June 1961.

APPENDIX A

DESIGN CHARACTERISTICS OF A PULSE DOPPLER RADAR FOR WIND SHEAR MEASUREMENTS

A. RECOMMENDED ANTENNA SPECIFICATIONS

1. Operating frequency: 9100 to 9500 mc

2. Polarization: Horizontal

3. Aperture: 45 feet vertical x 15 feet horizontal

4. Aperture Shape: Elliptical

5. Primary Pattern: Azimuth 3-db beam: 0.45°
   Full beam: 0.76°
   Elevation 3-db beam: 0.143°
   Full beam: 0.253°

6. Side Lobe Level: At least 20 db below main beam maximum in both primary planes

7. Aperture Efficiency: 65 percent

8. Maximum Boresight Error: 0.01 degrees for elevations from zero to 45 degrees. (This error is the angle between the optical boresight and the maximum angle of the main beam.)

9. Maximum Pointing Error: 0.01 degrees under conditions of maximum speed of rotation. (This error is the angle between the optical boresight position and the indicated drive position.)

10. Tracking Patterns: Four additional feeds identical to the primary feed and positioned in the shape of a vertical cruciform about the primary feed will be so arranged that the two vertical tracking patterns will have a common 3-db crossover on the optical boresight. The horizontal tracking patterns will be similarly arranged. Thus, tracking patterns will have essentially the same shape and side lobe level as the primary pattern.

11. Transmission Lines: The five feeds will be coupled to the rear of the antenna through five separate waveguide runs. The center feed and four tracking feeds will use RG-68/U waveguide or equivalent. The transmission lines must be so designed that changes in temperature will produce no motion of the feeds.

12. Ambient Temperature: The structure of the antenna will be designed for operation over the normal range of daylight ambient temperature in Florida. The structure should be so designed that temperature change produces only a change in beamwidth. Maximum beamwidth change will be ±5% of design center.

13. Wind Load: (a) The antenna will be capable of normal operation in surface winds of at least 25 miles per hour. There will be no change in boresight error or pointing error from winds having velocities within the range from zero to 25 mph.

    (b) The antenna will be capable of operation at a reduced performance level in surface winds from 25 to 50 miles per hour.

    (c) The antenna and supporting structure will be designed to survive winds up to 150 miles per hour if the antenna is properly stowed.

14. Feed Structure: The feed support will be so designed that winds from zero to 25 statue miles per hour and/or normal tracking accelerations will produce no change in boresight error or pointing error.

15. Elevation Track: The elevation drive system will be designed to track at angular velocities up to 0.1 radians per second with no position error, from zero to at least +45 degrees. Normal elevation scan will be downward from +45 degrees.

16. Azimuth Track: The azimuth drive system will be identical to the elevation track system in performance over a full 360 degrees.

17. Slew: Independent controls will be provided to permit azimuth and elevation slewing at the maximum drive rates for initial acquisition.

18. Boresight: A permanent optical boresight unit will be installed to permit boresighting prior to each use of the antenna.

19. Camera: A camera mount will be provided to permit unobstructed coverage of the complete solid angle subtended by the main beam.

20. Pedestal: The pedestal shall be considered as an integral part of the antenna because of the stringent requirements on boresight and pointing accuracy.

21. Instrumentation: Azimuth, elevation, recording outputs.

B. RECOMMENDED SPECIFICATIONS FOR COHERENT TRANSMITTER-RECEIVER SYSTEM

1. Frequency: In the band 9100 to 9500 mc. Once chosen, the frequency will remain constant. There should be sufficient frequency separation between the two radars to eliminate interference. A separation of 150 mc is suggested.

2. R-F Power: At least 100 kw peak power and up to 2400 watts average

3. Pulse Wide: 0.1, 0.5, 1, 2 microseconds available in steps

4. PRF: 2.5, 5, 7.5, 10, 12 kc available in steps

5. Each transmitter shall contain the following items:

   (a) A stable exciter (long-term stability of one part in 10^8), for which d-c filament supply should be considered.

   (b) Driver amplifier for the output tube

   (c) Modulator for the output tube (type will depend on output tube chosen)

   (d) All necessary cooling

   (e) R-f monitoring protection and pressurization if needed.

6. Receiver Preamplifier-Mixer Requirements:

   (a) Noise figure less than 7 db

   (b) Bandwidth compatible with 0.1 microsecond pulse

   (c) Balanced mixer configuration

   (d) Minimum power gain of 25 db

   (e) The local oscillator for the receiver is to be derived by side step techniques (servodyne, balanced modulator). The carrier and other sideband should be at least 120 db down from the local oscillator signal.

7. I-F Amplification: A final output frequency of 6 kc from a cathode follower (nominally 5052) is required:

   (a) Nominal amplification should be accomplished at the preamp-mixer output to overcome the receiver noise figure. Stable conversion is then required to bring final output to 6 kc. Over-all tangential sensitivity required is -100 dbm.

   (b) An amplitude-detected output of the i-f signal must be provided. Three (3) low impedance outputs are required.

   (c) Range gating is required and must be accomplished at low-level stages after pre-amplification. Gate width will be controlled in steps of 0.1, 0.5, 1, 2, and 5 microseconds. The gate position will be continuously variable throughout the interpulse period for all prf's.

C. MISCELLANEOUS REQUIREMENTS

1. A duplexing system is required. Insertion loss should not exceed 0.5 db. Receiver isolation should be compatible with system sensitivity requirements. Ferrite isolation or ferrite switches should be investigated for this requirement.

2. Sufficient shielding must be provided for maintenance of system sensitivity and prevention of spurious responses. Items to be considered are:

   1. Receiver and transmitter isolation

   2. Receiver and various signal sources such as local oscillator, other conversion oscillators, and so on.

3. Gain control is to be provided for manually and in steps. Several levels of gain are suggested to provide a dynamic range of 70 db in 10-db steps.

4. Power supply requirements to be provided as follows:

   1. Primary power: 60 cycle, single phase, 105-130 volts

   2. Regulation over input range: 0.1 percent
      Ripple: 0.1 percent

5. Proper cooling and/or ventilation to be provided

APPENDIX B

ERROR ANALYSIS OF THE WIND SHEAR SYSTEM

The purposes of this error analysis were: (1) to provide a preliminary estimate of the accuracy with which the contemplated Wind Shear system can measure wind velocity as a function of altitude, and (2) to assist in the selection of optimum equipment components. The analysis was conducted by assuming a set of specifications for the Wind Shear system at the beginning of the program, investigating the sources of error in the hypothetical system, and modifying those specifications in such a way as to minimize errors. Thus the error analysis has constituted one of the central aspects of the program since its inception, and the error estimates have continually changed as new thinking and compromises were incorporated into the specifications.

Since a number of the factors contributing to error in the measurement of the absolute wind velocity profile do not contribute to the error in measurement of wind shear, we have treated these two measurements separately. This distinction is important in view of the fact that, for the SATURN program, greater tolerances can be allowed in both absolute wind velocity data and absolute altitude data than in wind shear data.

We have further categorized the errors in terms of:

1) accuracy in the measurement of the radial component of the wind in the direction of each radar beam.

2) accuracy in the determination of the altitude at which each component velocity is measured, and

3) accuracy in the computation of the resultant wind vector from the two measured components. These errors are summarized in Tables 4 through 6.

We have attempted throughout the analysis to estimate the error which will be exceeded only 10 percent (or less) of the time, i.e., the 90 percent confidence limit. It should be noted that some of the estimates are based on actual experimental measurements while some are based solely on experience

and engineering judgment. In many instances manufacturers quote greater accuracies for possible components of this system than were used in this analysis. Equipment accuracies used in the analysis are measured values of which we are aware. If manufacturers can meet these quoted accuracies, the over-all error in the system will be smaller than indicated herein.

Calculations are premised on a chaff target slant range of 25 miles and a specific target altitude (up to 16 km) which tends to maximize the given error being investigated. Thus we have again attempted to be conservative.

DISCUSSION OF TABLE 4 (Page 39)

Error due to finite sampling time

The median frequency of a spectrum of 1200 cycles total width can be estimated to within ±30 cycles with a 90-percent confidence limit during the prescribed sampling time (0.3 seconds) per 30 meter altitude increment. Narrower spectra can be estimated with proportionately greater precision in the same time. Although we have not yet observed such a wide spectrum during any of our Doppler radar experiments (even while studying thunderstorms), this extremely pessimistic value has been used in the error analysis.

Error due to inaccuracies in estimate of fall velocity of chaff

An assumed chaff fall velocity will be used in the system in correcting measured velocity in the direction of each radar. To determine what fall velocities should be used in the operational system, we measured the fall velocity of two types of chaff being considered for use in the wind shear system in the CAL altitude chamber. During 80 tests, with 50 to 100 chaff dipoles per test, at altitudes ranging to 30,000 ft, the maximum deviation from the observed mean fall velocity at any altitude was 0.2 m/sec. To provide for possibly greater variation under different environmental conditions and to account for the influence of the dispenser on fall velocities, we have arbitrarily doubled that value in the error analysis. The error contribution to the measurement of radial wind speed was computed to be 10 cycles on the basis of a radar

elevation angle of 24 degrees. Since very nearly the same inaccuracies will persist over large altitude increments (several thousand feet), errors in the estimate of fall velocity will not cause inaccuracies in the measurement of wind shear. It will, however, contribute to the inaccuracies in the measurement of absolute wind velocity.

Error due to up and down drafts

Our estimate of vertical air velocities of ±0.3 m/sec used in the error analysis is conservative for nonturbulent meteorological conditions that are not associated with convective clouds or frontal situations. Within two or three radii of the center of a cumulus cloud or immediately above a cold front, that velocity may be exceeded. The value of 0.3 m/sec corresponds to an 8-cycle error in the direction of the radar (24-degree elevation angle). Turbulent vertical motion exceeding 0.3 m/sec, though occurring much less than 10 percent of the time (probably less than 1 percent of the time) is of considerable importance and must be compensated for operationally.

Error due to nonmonotonic wind distribution

An analysis of smoke trail data was requested from the contracting agency to determine the error that nonmonotonic wind distributions will contribute to median velocity measurements made with the envisaged wind shear system. A tentative error estimate of 20 cycles was used. This value represents the maximum computed error for all nonmonotonic levels observed from three available smoke trail profiles. A height increment of 250 ft., equivalent to a 60-ft antenna beam at 25 miles, was assumed.

Error in horizontal velocity due to boresight error

The wind shear system will measure radial wind velocity V_r with each of its radars. To convert to horizontal velocity V_{r_1} in the direction of each radar beam the following computation will be made:

$$V_{r_1} = \frac{V_r}{\cos \phi_1}$$

where ϕ_1 is the observed elevation angle.

If the true elevation angle is $\phi_1 + \Delta\phi$, the computed value of V_{r_1} will be in error by an amount equal to

$$V_r\left(\frac{1}{\cos(\phi_1 + \Delta\phi} - \frac{1}{\cos\phi_1}\right)$$

To compute the expected error, we assumed that the wind shear dishes would be at least as good as the presently operating High Power, 60-ft dish at CAL, which has a measured boresight error of less than two minutes. (Measurements on the High Power dish were made during daylight hours in winds up to 25 knots.) We assumed further that the 90 meter per second wind was blowing directly from one antenna to the chaff column. An observed elevation angle of 24 degrees was chosen for the calculation, and all boresight error was assumed to be along the elevation axis. The computed error was 0.025 meters/second because of boresight inaccuracies, which corresponds to a two-cycle error in Doppler shift. Therefore, boresight errors are insignificant in the determination of horizontal velocity in the direction of each radar. They are important in determination of altitude as will be seen in the discussion of Table 4.

Error due to index of refraction variations

Because of ray bending the angle of incidence of the radio energy on the chaff target will differ from the angle of elevation of the antenna. This error will appear in the calculation of horizontal velocity in the direction of the radar in the same manner as the boresight error. Computations based on index of refraction profiles obtained from AMR* show that the radial velocity error in the worst case observed would yield a Doppler frequency error less than 1 cycle, and therefore is negligible.

Electronic instrumentation error

Discriminators similar to our median frequency sensor are commonly accurate to ±1 cycle. Therefore, electronic instrumentation will not contribute significantly to system error.

*Atlantic Missile Range

DISCUSSION OF TABLE 5 (Page 39)

Altitude errors due to boresight errors

As stated previously, tests on the 60-ft High Power antenna at CAL indicate that the mechanical and electrical axes maintain their relative position to within two minutes over periods of at least a few hours in winds up to 25 knots. With equivalent antennas on the Wind Shear system and provisiions (as are planned) for boresighting each antenna prior to an experiment, it should be possible to maintain that accuracy throughout a series of wind shear measurements at A.M.R. The computed error of 23 meters is based on a 25-mile range at zero degrees elevation angle, where the error is most serious.

Since the boresight error will remain constant throughout an experiment, it will not contribute to the inaccuracies in the measurement of shear.

Altitude error due to range error

The product of range error and the sine of the elevation angle is an altitude error. We have assumed a 10-meter range error, which is a conservative figure for modern radars, and computed a corresponding 4-meter attitude error at an elevation angle of 24 degrees.

Altitude error due to propagation effects

A preliminary analysis was made of index of refraction data obtained from A.M.R. The maximum deviation (due to stratified index of refraction variations) between indicated altitude (R sin ϕ) and the actual altitude at which the beam would have intersected the chaff column was 120 meters, which occurred at an elevation angle of approximately 5 degrees. We have assumed that the computer program for correcting altitude information in accordance with index of refraction data for the time of the experiment would eliminate 90 percent of that error, and have used a residual error estimate of 12 meters. In practice, depending on the complexity of the computer program chosen, it appears possible to reduce this error even further.

Altitude error due to nonuniform chaff distribution

In the operation of the wind shear system, the velocity corresponding to the median frequency will be assigned to the altitude corresponding to the center of the sampled volume. This velocity is actually present, however, at the altitude of the center of mass of the chaff within the sampled volume. The difference between these two altitudes would constitute an altitude error if not compensated for.

However, we are compensating by designing the antenna feed system so that (1) only the sampled volume is illuminated and (2) the tracking receiver will observe alternately the upper half and the lower half of that volume in the manner depicted schematically below. If the tracking system holds the elevation angle constant, the upper and lower conical scan volumes must reflect the same amount of power. Since only half of each of these volumes is illuminated, we know that these two half beamwidths contain identical amounts of chaff.

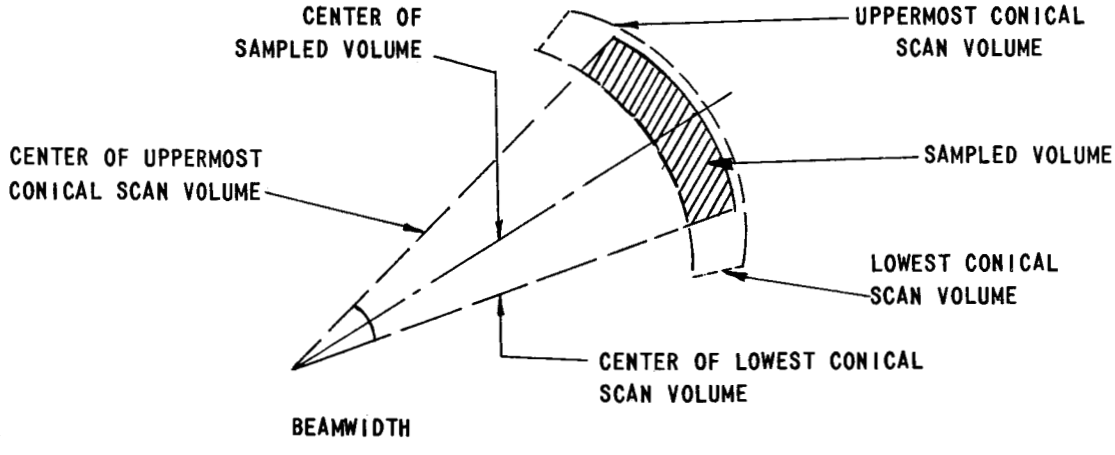

In practice it is impossible to hold the elevation axis perfectly steady. The Buffalo experiments indicate that approximately ±0.6 mil of jitter may be present due to nonuniformity in chaff concentration.* These measurements

*Jitter does not appear as a source of height error in itself because the range tracking portion of the programmed altitude system will compensate for the elevation angle changes to maintain a constant altitude.

were made at ranges of approximately 10 miles where ±0.6 mils corresponds to altitude variations of ±10 meters. Since in the Buffalo experiments the conventional conical scan could consistently correct pointing direction before moving 10 meters, the center of mass of the chaff within the incremental volume (upper and lower conical scan volumes) must have been within 10 meters of the center of the beam. As shown, the incremental volume in the wind shear tracking system will be the entire upper and lower halves of the sampled volume, which is the only volume illuminated. Assuming that the statistics of chaff distribution in the Buffalo experiments are representative of the operational chaff dispensing system, we have used 10 meters in the error analysis.

DISCUSSION OF TABLE 6 (Page 40)

The magnitude and direction of the total wind vector, which are computed from the two measured components, will be in error if the individual components have errors. Furthermore, the magnitude and direction will be erroneous if the components are not measured at the same height. Both of these sources of error can be examined by rearranging the terms of equations given in Section 5 of Progress Report No. 1. The following is a method for analyzing the errors in the vector wind magnitude.

Equation (5.6) in Progress Report No. 1 can be written as follows:

$$\cos\phi \, dV = \frac{\csc\theta\left[1 - g(\theta,\alpha)\cos\theta\right]}{\left[1 - 2\cos\theta\, g(\theta,\alpha) + g^2(\theta,\alpha)\right]^{1/2}} dV_{r_1} + \frac{\csc\theta\left[\cos\theta - g(\theta,\alpha)\right]}{\left[1 - 2\cos\theta\, g(\theta,\alpha) + g^2(\theta,\alpha)\right]^{1/2}} dV_{r_2} \quad (1)$$

where θ is the supplement of the horizontal projection of the angle of intersection of the beams

ϕ is the common elevation angle of the beams

α is the angle between the wind direction and the beam of the first radar

$g(\theta,\alpha) = \cos\theta + \sin\theta \tan\alpha$

dV, dV_{r_1}, dV_{r_2} are respectively the errors in the magnitude of the horizontal wind vector, the component measured by the first radar, and the component measured by the second radar, where the measured components have been corrected for the chaff's fall velocity.

We shall consider the quantities dV_{r_1} and dV_{r_2} to be random variables. Thus dV the error in the computed magnitude of the total horizontal wind vector, is a random variable. Clearly the average value of dV is zero if the averages of dV_{r_1} and dV_{r_2} are zero, which is a reasonable assumption. Furthermore, the variance of dV is given in terms of the variances of the measured components by

$$\cos^2\phi\,\sigma_V^2 = A^2\sigma_{V_{r_1}}^2 + B^2\sigma_{V_{r_2}}^2$$

where $$A^2 = \frac{\csc^2\theta\,[1-g(\theta,\alpha)\cos\theta]^2}{1-2\cos\theta\, g(\theta,\alpha)+g^2(\theta,\alpha)}$$

$$B^2 = \frac{\csc^2\theta\,[\cos\theta-g(\theta,\alpha)]^2}{1-2\cos\theta\, g(\theta,\alpha)+g^2(\theta,\alpha)}$$

Assuming that the errors in measured components are normally distributed with identical variances $\sigma_{V_r}^2$ leads to

$$\cos^2\phi\,\frac{\sigma_V^2}{\sigma_{V_r}^2} = (A^2+B^2)$$

Thus the quantity ($A^2 + B^2$), which is a function of θ and α , can be considered an error coefficient. Figure B-1 displays this error coefficient over a range of θ and α . For example, if θ = 70 degrees and α = 100 degrees, we conclude

$$\cos^2\phi\,\sigma_V^2 = 1.38\,\sigma_{V_r}^2$$

We can obtain the range of V in which 90 percent of the values will lie in the following way. Notice that

$$\cos\phi\,\sigma_V = \sqrt{A^2+B^2}\;\sigma_{V_r} \qquad (2)$$

The standard deviation of the magnitude of the computed vector is thus simply related to the standard deviation of the measured components. Likewise, any multiple of the standard deviation of the computed vector magnitude is related

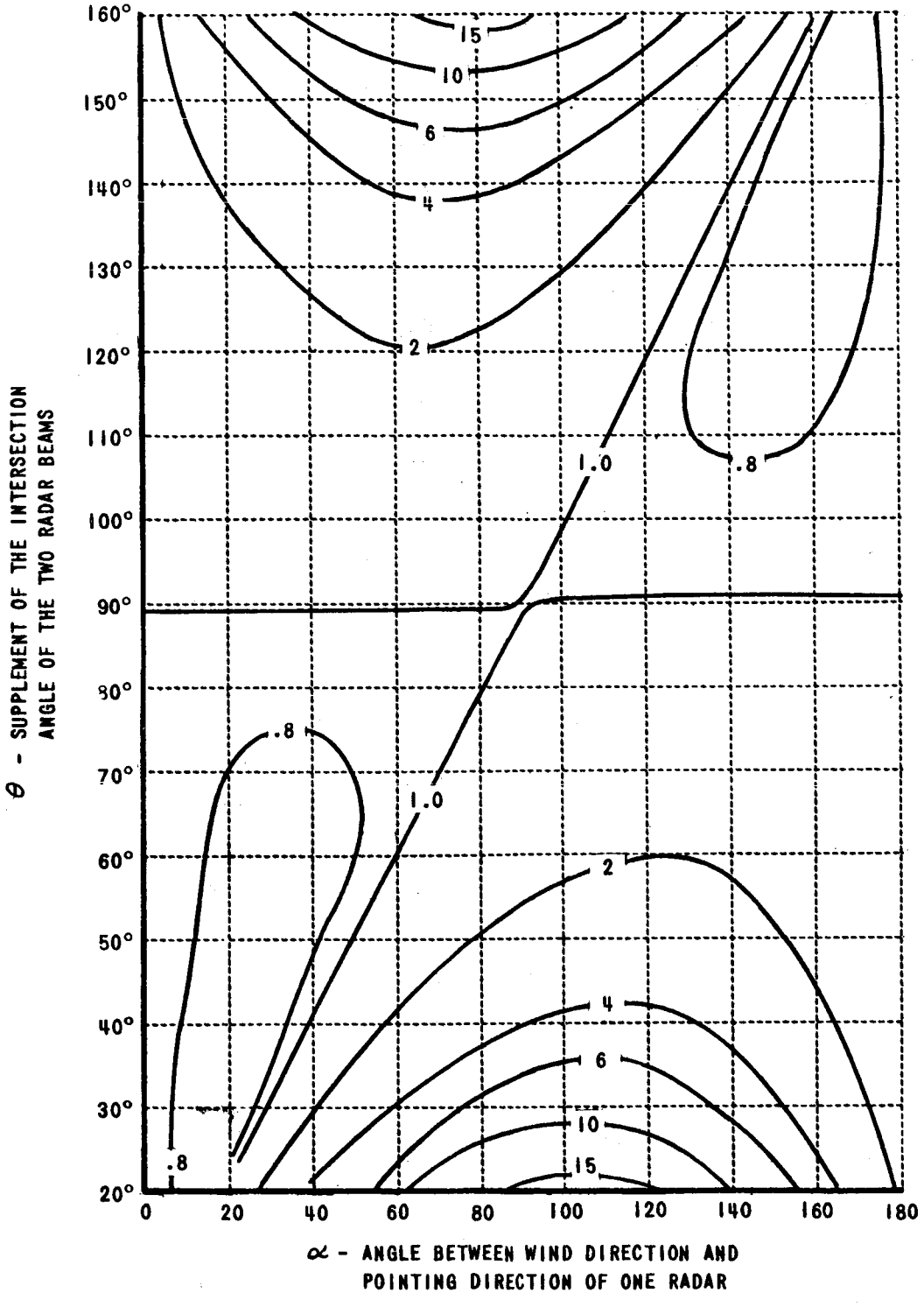

Figure B-1 THE ERROR COEFFICIENT $A^2 + B^2$

to the corresponding multiple of the standard deviation of the measured components. Thus the 90-percent confidence limits of the vector magnitude (namely $\pm 1.65\ \sigma_V$)are related to the 90-percent confidence limits of component measurements exactly according to (2), where the σ's can be interpreted as 90-percent intervals instead of standard deviations.

For example, in the case cited above for $\theta = 70$ and $\alpha = 100$, we have

$$\cos\phi\ \sigma_V = \sqrt{1.38}\ \sigma_{V_r}$$

so that if the measurement error is less than 0.6 m sec^{-1} 90 percent of the time, it follows that the vector magnitude error is less than $\frac{0.6\sqrt{1.38}}{\cos\phi}\ m\ sec^{-1}$ 90 percent of the time. Hence $\cos\phi\ EV = \sqrt{1.38}\ EV_r$ where E , as stated previously refers to the 90-percent error limit.

Because of their dependence on the wind angle α , it is difficult to state general conclusions regarding the error coefficients. Since, however, we will have little control over the value of α in the experiments, it is reasonable to suppose that, on the average, all values will be equally probable (that is, will be encountered with equal frequency). Therefore, in Figure B-1 we can average the error coefficients over α to obtain coefficients as functions only of θ . Figure B-2 is a plot of these average coefficients, $\overline{A^2 + B^2}$. It will be noticed that, on the average, intersection angles around 90 degrees cause the least magnification of errors. In fact, when $\theta = 90$ degrees, the only magnification of error is caused by the elevation angle ϕ . It was estimated that 90 percent of the time, our system would be operating within θ confines of 90 ±40 degrees hence, corresponding values of $\overline{A^2 + B^2}$ were averaged from Figure B-2 over this angular increment to yield

$$\sqrt{(A^2 + B^2)_{AVE.}} = \sqrt{1.24}$$

Another error in vector magnitude V is introduced when the two radars do not sample a common altitude. Because of random errors in positioning the two beams, the errors in sampled heights will be random variables, denoted by dh_1 , and dh_2 . If dh_1 and dh_2 are independent and normally distributed with zero means and identical variances σ_h^2 , then their sum, which equals

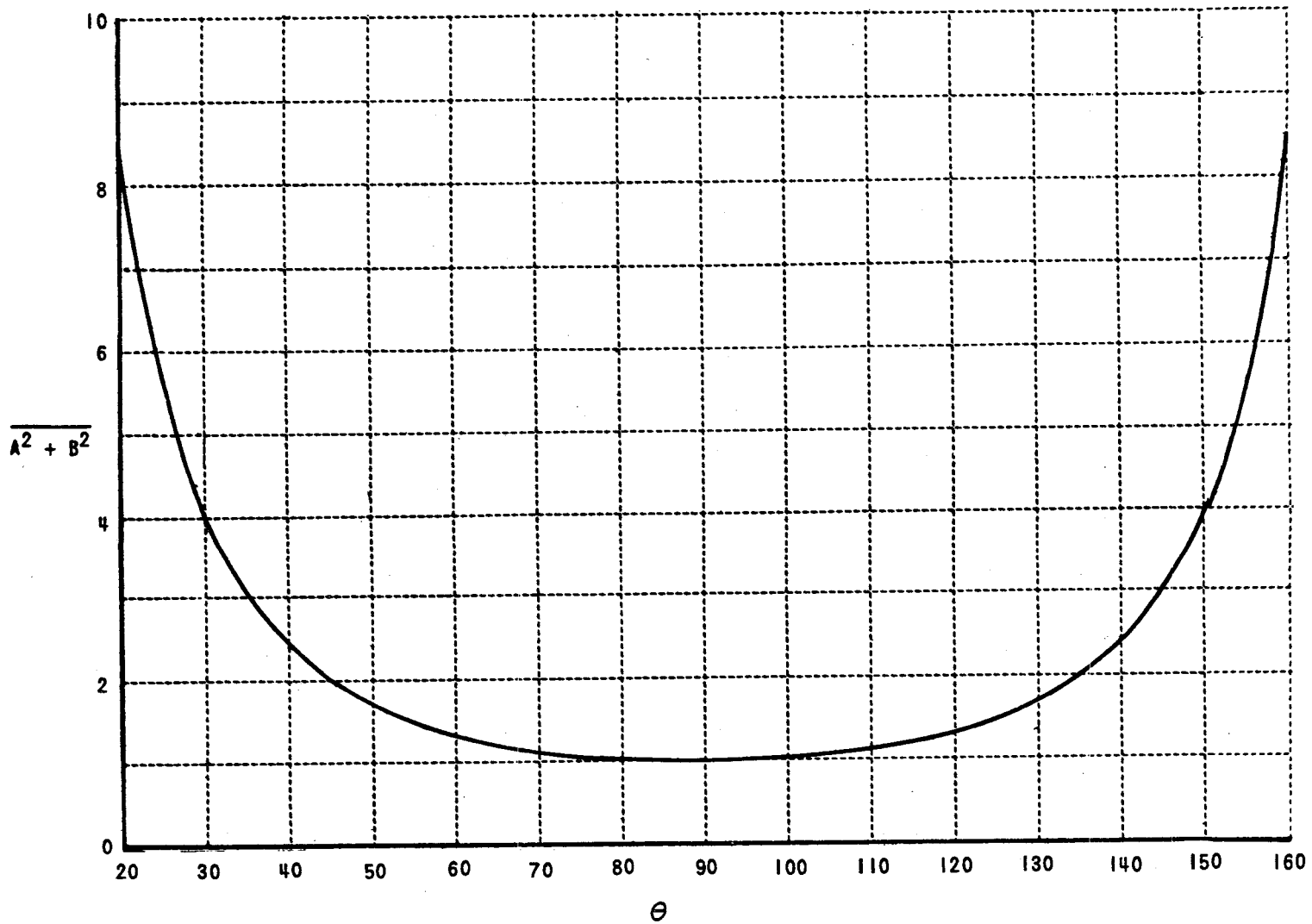

Figure B-2 ERROR COEFFICIENT $(\overline{A^2 + B^2})$ VS θ AVERAGED OVER ALL WIND DIRECTIONS (α)

the height separation between the beams, is normal with zero mean and variance $2\sigma_h^2$. The change with height of the horizontal wind speed, $\frac{\partial V}{\partial Z}$, is a random variable in space and time with a mean which is likely to be zero and a variance of $\sigma^2_{\partial V/\partial Z}$. Thus, the error in velocity $(dV)'$ resulting from improper positioning of beams is a random variable given by

$$(dV)' = \frac{\partial V}{\partial Z}(dh_1 + dh_2) \tag{3}$$

with mean zero and variance $\sigma^2_{V'} = 2\sigma_h^2 \, \sigma^2_{\partial V/\partial Z}$.

To see how this error propagates, we refer back to Equation (1). On the right-hand side of (1), we may set dV_{r_2} to equal zero and let dV_{r_1} equal $(dV)'$ of equation (3). For example,

$$\cos\phi \, dV = \frac{\csc\theta\,[1 - g(\theta,\alpha)\cos\theta]}{[1 - 2\cos\theta\, g(\theta,\alpha) + g^2(\theta,\alpha)]^{1/2}}\,(dV)'$$

Proceeding as before, we obtain

$$\cos^2\phi\,\sigma_V^2 = A^2\sigma^2_{(dV)'} = 2A^2\sigma_h^2\,\sigma^2_{\partial V/\partial Z}$$

where A^2 is, of course, a function of θ and α. As before, we can consider averages $\overline{A^2}$ of the coefficients over α. If we had begun from (1) by setting $dV_{r_1} = 0$ and $dV_{r_2} = (dV)'$ then we would have

$$\cos^2\phi\,\sigma_V^2 = 2B^2\sigma_h^2\,\sigma^2_{\partial V/\partial Z}$$

It can be shown that $\overline{A^2} = \overline{B^2}$, so that the general result is

$$\cos^2\phi\,\sigma_V^2 = (A^2 + B^2)\,\sigma_h^2\,\sigma^2_{\partial V/\partial Z}$$

Thus, as before, Figure B-2 can be used to obtain the average error coefficients $\overline{A^2 + B^2}$, and the standard deviations will be

$$\cos\phi\,\sigma_V = \sqrt{\overline{A^2 + B^2}}\;\sigma_h\,\sigma_{\partial V/\partial Z}$$

and the 90-percent confidence limits will be

$$\cos\phi\,EV = \sqrt{\overline{A^2 + B^2}}\;Eh\;E\frac{\partial V}{\partial Z}.$$

Thus, the standard deviation (or 90-percent inclusive value) of the computed V is obtained by multiplying the square root of the error coefficient given in Figure B-2 by the product of the standard deviations (or 90-percent values) of height errors dh and the standard deviations (or 90-percent values) of the vertical wind shear $\frac{\partial V}{\partial Z}$. A 90-percent value of 2 m/sec/30 m was assigned $\frac{\partial V}{\partial Z}$ based on data in reference (1)* and our preliminary smoke-trail analyses. Summing the two independent errors, we obtain

$$\cos^2\phi\,\sigma_V^2 = 1.24\,\sigma_{V_r}^2 + 1.24\,\sigma_h^2\,\sigma_{\partial V/\partial Z}^2$$

or $$\cos^2\phi\,(EV)^2 = 1.24\left[(EV_r)^2 + (Eh)^2\left(E\frac{\partial V}{\partial Z}\right)^2\right]$$

Inserting appropriate values for errors gives

$$\cos^2\phi\,(EV)^2 = 1.24\left[(0.6)^2 + (28)^2\,(2/30)^2\right]$$

$$\text{or}\quad \cos\phi\,(EV) = 2.3\ m/sec$$

ERRORS IN WIND DIFFERENCE BETWEEN TWO ALTITUDES

Thus far we have determined the error in wind speed measured from two components at one altitude. It is of interest to investigate the error in the difference in wind speeds measured at two altitudes. Let V_1 and V_2 be wind speeds measured at two nearby altitudes and consider $\Delta V = |V_1 - V_2|$. Clearly

$$\sigma_{\Delta V}^2 = \overline{(V_1 - V_2)^2} - \overline{(V_1 - V_2)}^2$$

$$= \sigma_{V_1}^2 + \sigma_{V_2}^2 - 2\sigma_{V_1}\sigma_{V_2}\,R(V_1, V_2)$$

where $\sigma_{V_1}^2$ and $\sigma_{V_2}^2$ are variances of measured speed at the two altitudes, and $R(V_1, V_2)$ is the correlation coefficient between the speeds. Since $\sigma_{V_1}^2 = \sigma_{V_2}^2 = \sigma_V^2$, we have

$$\sigma_{\Delta V}^2 = 2\sigma_V^2\left[1 - R(V_1, V_2)\right],$$

or $$E\Delta V = \sqrt{2}\,EV\sqrt{1 - R(V_1, V_2)}$$

EV was determined in the last section to be 2.3 m/sec x sec ϕ, so the only remaining problem is to determine $R(V_1, V_2)$. Certainly some of the errors in V are correlated over small height intervals: namely those arising from boresight errors which lead to improper positioning of the beams.

(1) * Scoggins, James R., and Vaughan, William W., "Cape Canaveral Wind and Shear Data (1 thru 80 km) for Use in Vehicle Design and Performance Studies," NASA TN D-1274.

It can be shown that

$$R(V_1, V_2) = \frac{\sigma_V^2 (sys)}{\sigma_V^2}$$

where $\sigma_V^2(sys)$ is the systematic error in the velocity measurement. We assume that $\sigma_V^2(sys) = \sigma_{V'}^2$, the error due to improper positioning, which was evaluated in the previous section to be $(1.9)^2$ $(m/sec)^2$. Thus,

$$R(V_1, V_2) = \frac{(1.9)^2}{(2.3)^2} = 0.68$$

and

$$E\Delta V = \sqrt{2}\ sec\ \phi \times 2.3 \times \sqrt{1-0.68}$$

$$= 1.8\ m/sec \times sec\ \phi.$$

This analysis assumes that $\overline{(\partial V/\partial z)^2}$ is the same at the two altitudes of interest. If the wind shear is completely uncorrelated at the two altitudes, $R(V_1, V_2)$ will be zero and

$$\sigma_{\Delta V}^2 = \sigma_{V_1}^2 + \sigma_{V_2}^2 = 2\sigma_V^2$$

$$E\Delta V = 3.2\ m/sec \times sec\ \phi$$

ERRORS IN WIND SHEAR

By wind shear is meant the quantity

$$S \equiv \left| \frac{V_1 - V_2}{h_1 - h_2} \right| = \frac{\Delta V}{\Delta h}$$

In general, V_1 and V_2 will have errors which arise from inaccuracies in measured components and improper positioning of beams. Likewise, there will be uncertainties in the quantity Δh. The error in shear from both sources is

$$dS = d\left(\frac{\Delta V}{\Delta h}\right) = \frac{d\Delta V - \frac{\Delta V}{\Delta h}\, d\Delta h}{\Delta h}$$

Thus,

$$(dS)^2 = \frac{(d\Delta V)^2 + \left(\frac{\Delta V}{\Delta h}\right)^2 (d\Delta h)^2 - 2(d\Delta V)(d\Delta h)\left(\frac{\Delta V}{\Delta h}\right)}{(\Delta h)^2}$$

and averaging gives

$$(\Delta h)^2 \overline{(dS)^2} = (d\Delta V)^2 + \overline{\left(\frac{\Delta V}{\Delta h}\right)^2 (d\Delta h)^2} - 2\,\overline{(d\Delta V)(d\Delta h)\left(\frac{\Delta V}{\Delta h}\right)} \qquad (4)$$

The terms on the right side reduce to a simpler form. Notice that because of independence, the averages can be computed separately in the second term. This is not true in the third term. In the third term, however, consider the new random variable

$$\delta\Delta V = \left(\frac{\Delta V}{\Delta h}\right)(d\Delta h)$$

Then the average to consider is

$$\overline{(\delta\Delta V)(d\Delta V)}$$

Now $\delta\Delta V$ is the constribution to the total error $d\Delta V$ which arises from improper placement of beams. Therefore,

$$(d\Delta V) = (\delta\Delta V) + (\Delta' V)$$

where the quantity ($\Delta' V$) is the error in ($d\Delta V$) arising from inaccuracies in the measurement of components. Thus

$$\overline{(\delta\Delta V)(d\Delta V)} = \overline{(\delta\Delta V)(\delta\Delta V + \Delta' V)} = \overline{(\delta\Delta V)^2} + \overline{(\delta\Delta V)(\Delta' V)}$$

Because of independence between ($\delta\Delta V$) and ($\Delta' V$), we have as a result:

$$\overline{(d\Delta V)(d\Delta h)\left(\frac{\Delta V}{\Delta h}\right)} = \overline{(\delta\Delta V)(d\Delta V)} = \overline{(\delta\Delta V)^2} = \overline{\left(\frac{\Delta V}{\Delta h}\right)^2 (d\Delta h)^2}$$

which is identically the second term in (4).

Therefore, we conclude for the expression for shear as follows:

$$(\Delta h)^2 \overline{(dS)^2} = \underset{(1)}{\overline{(d\Delta V)^2}} - \underset{(2)}{\overline{\left(\frac{\Delta V}{\Delta h}\right)^2 (d\Delta h)^2}} \qquad (5)$$

The terms on the right will now be considered separately.

(1) $\overline{(d\Delta V)^2}$:

$$d\Delta V = d(V_1 - V_2) = dV_1 - dV_2 \text{ , so that}$$

$$\overline{d\Delta V} = \overline{dV_1} - \overline{dV_2} = 0 \quad \text{and}$$

$$\overline{(d\Delta V)^2} = \sigma^2_{\Delta V}$$

which quantity was dealt with previously. It was found that

$$E\Delta V = 1.65\,\sigma_{\Delta V} = 1.8 \text{ m/sec} \times \sec\phi$$

whence

$$\sigma^2_{\Delta V} = \left(\frac{1.8}{1.65}\right)^2 \times \sec^2\phi$$

(2) $\overline{\left(\frac{\Delta V}{\Delta h}\right)^2 (d\Delta h)^2}$:

The two factors are independent and can be averaged separately. The quantity $\overline{\left(\frac{\Delta V}{\Delta h}\right)^2}$ is essentially the quantity which was considered earlier, at which time it was estimated that

$$E\frac{\partial V}{\partial z} = 2 \text{ m/sec}/30 \text{ m} = 1.65\,\sigma_{\partial V/\partial z}$$

Thus,

$$\overline{\left(\frac{\Delta V}{\Delta h}\right)^2} = \left(\frac{2/30}{1.65}\right)^2.$$

Notice that $d\Delta h = d(h_1 - h_2) = dh_1 - dh_2$ so that $\overline{d\Delta h} = 0$. Thus $\overline{(d\Delta h)^2} = \sigma^2_{\Delta h}$, and we have

$$\overline{(d\Delta h)^2} = \overline{(h_1 - h_2)^2} - \overline{(h_1 - h_2)}^2 = 2\sigma_h^2\left(1 - R(h_1, h_2)\right)$$

where σ_h^2 is the common variance in height measurements at both altitudes, and $R(h_1, h_2)$ is the correlation of errors. We have shown already that σ_h^2 is such that

$$Eh = 1.65\,\sigma_h = 28 \text{ m.}$$

Thus

$$\sigma_h^2 = \left(\frac{28}{1.65}\right)^2 \text{ m}^2$$

It is clear that $R(h_1, h_2) = \dfrac{\sigma_h^2(sys)}{\sigma_h^2}$

where $\sigma_h^2(sys)$ is the systematic error in height, principally due to boresight errors. From Table 5, we find that

$$R(h_1, h_2) = \frac{\sigma_h^2(sys)}{\sigma_h^2} = \left(\frac{23}{28}\right)^2 = 0.67$$

Thus,

$$\overline{(d\Delta h)^2} = 2\left(\frac{28}{1.65}\right)^2(1-0.67) = \left(\frac{23}{1.65}\right)^2 m^2$$

Then the complete second term is

$$\overline{\left(\frac{\Delta V}{\Delta h}\right)^2 (d\Delta h)^2} = \left(\frac{2/30}{1.65}\right)^2 \cdot \left(\frac{23}{1.65}\right)^2 = \left(\frac{0.93}{1.65}\right)^2$$

Combining terms, we obtain for (5):

$$(\Delta h)^2 \overline{(dS)^2} = \frac{(1.8)^2}{(1.65)^2} \sec^2\phi - \frac{(.93)^2}{(1.65)^2}$$

or

$$(\Delta h)^2 [ES]^2 = (1.8)^2 \sec^2\phi - (.93)^2$$

For ϕ = 24 degrees, the highest elevation anticipated when operating at a 25 mile range

$$ES = \frac{1.7}{\Delta h} \text{ m/sec per m}$$

Again, this analysis assumes that $\overline{(\partial V/\partial z)^2}$ is constant over Δh. This assumption is certainly true more than 90 percent of the time for Δh = 30 meters. Therefore the 90-percent confidence limits of the measurement of total wind shear with the proposed system will be

$$ES = .056 \text{ sec}^{-1}$$

APPENDIX C

RECOMMENDED INVESTIGATION OF ATMOSPHERIC WIND VARIABILITY AND TURBULENCE DETECTION

INTRODUCTION

In order to define quantitatively space vehicle structural and control system design criteria, the following characteristics of the wind structure of the atmosphere must be described:

1. The steady or average wind velocity profile.
2. Wind shear as determined by the difference between wind vectors of the average velocity profile over height intervals of interest.
3. Variability of the average wind with time and distance.
4. Turbulent air motion.
5. The combined simultaneous effect of the above parameters.

The distinction between turbulent eddies and average wind variability is subtle, depending on the time and distance scale-dimensions adopted. These scale dimensions must be dictated by characteristics of the missile under consideration, namely, the vehicle velocity and frequency response as well as by turbulence characteristics of the atmosphere. For example, a missile with a resonance at 0.2 cycles/sec traveling vertically at 400 m/sec will respond during one complete cycle to wind profile wavelengths in excess of 200 m ($400 \div 0.2$). The wind profile is considered stationary during the period of missile traverse. Wind motions of higher frequency will manifest themselves as turbulence to the vehicle in question.

In order to express the wind characteristics outlined above and to integrate their effects in terms of missile behavior, statistical analysis of atmospheric wind structure is required. In terms of the missile-related scale distances (from tens of meters up) and times (tenths of seconds and greater) over which wind information is desired, it would appear that high resolution Doppler radar is eminently well suited as a measurement tool.

By way of illustration, the CAL DOP radar has a variable pulse length and a variable range gate which can be reduced to 0.5 μsec and 0.7 μsec respectively, producing a sample volume of 180 meters depth (1/2 Range Gate + 1/2 Pulse Length). The minimum time over which a sample is measured is limited only by the length of record requirements for representative time-series analysis. In the report (Section IIB4), it was shown that this time did not exceed approximately 0.3 second for average velocity measurements and 1.7 seconds for detailed spectrum presentation of 0.5 m/sec resolution.

Measurement of average wind velocity profiles and of wind shear (Items 1 and 2) with Doppler radar were the principal subjects of the investigation being reported in the main body of this document. Further theoretical and experimental investigation of wind variability and turbulence (Items 3 and 4) constitute the logical extension of this effort in terms of developing a capability for quantitatively describing the influence of wind structure on missile behavior.

CONCEPTS OF TURBULENCE AND WIND VARIABILITY MEASUREMENT WITH DOPPLER RADAR

The distribution of velocities over an ensemble of chaff scatterers or weather targets approximates the simultaneous distribution of wind velocities in the same volume. The spread of the distribution indicates wind velocity variations associated with wind shear or turbulence. For vertical radar viewing it is unlikely that shear would contribute significantly so the spread of the distribution can be attributed to turbulence only. It can be argued that the amount of spread depends upon the energy of the turbulence in the scales smaller than the sampled volume. The turbulent scales larger than the sampled volume manifest themselves as time variations in the velocity distribution. Such time variations can be analyzed to determine the shape of the spectrum of turbulence for wavelengths larger than the sampled volume, while an indication of the power included in the spectrum for shorter wavelengths can be obtained from the spread of the distribution. In other words, the

velocity distributions can be considered as integrated outputs of high-pass filters when the input is the spectrum of turbulence, while time variations in the distributions can be considered as outputs of low-pass filters. The analogy can be extended to include the response of the scatterers to the wind, since the scatterers act as low-pass filters.

Thus the whole concept of measuring wind irregularities with radar can be described in the language of filter theory. The analysis to determine how the spectrum of turbulence can be computed from radar measurements would proceed from such a description.

A principle virtue of the Doppler radar concept of wind measurement is the comparative ease with which it can be used to sense time and spatial variations of winds. The relatively short time required to obtain a mean velocity profile over a few kilometers should enable repeated profile measurements, and thus a measure of wind variability as a function of time. To extend the time variable downward, it is only necessary to hold to a particular altitude of interest and continue to horizontally track the "same" parcel of air to obtain time variations of velocity within a volume moving with the air mass. On the other hand it is possible to fix the geometry of observation and determine Eulerian wind variation in a given volume in space as the air mass passes through that volume.

Information on spatial (horizontal or vertical) wind variability can be obtained by taking measurements for a large number of illuminated regions having different volumes and analyzing variations in the form of the mean spectrum as a function of volume sampled. (The contributing volume can be changed by varying either the range, pulse length, or sampling gate width of the radar.) If the sampled volume contains a large number of statistically independent regions of velocity, the mean Doppler spectrum will be approximately invariant in time and Gaussian in form. Thus the form should become increasingly Gaussian as the sampled volume is increased. The volume at which the distribution becomes arbitrarily close to Gaussian is determined by the number of independent regions in the sampled volume, and hence by the size of the independent regions (or correlation volume) as compared to the sample size. Therefore, the shape of mean spectra for different volumes is

expected to indicate the scale size of turbulence. Further, the time variations of the mean velocity spectra from illuminated regions having different volumes will be greater, on the average, for small illuminated volumes than for large ones. For a quantitative description of this effect, the standard deviation (over time) of the mean can be plotted against the volume illuminated. This function should contain information about the correlation distance, or scale, of turbulence.

RADAR MEASUREMENTS

Turbulence and wind variability measurement can be made whenever meteorological targets (dense clouds, rain, snow) are present or when a wind tracer such as radar chaff is introduced into the atmosphere. As indicated previously, turbulence measurements can readily be made with the radar pointing vertically; in this operating mode, horizontal wind motions and variations are not detected (since they do not have a component in the direction of the radar). At oblique viewing angles, the turbulence component of the spread of the velocity distribution can be separated from the component due to vertical wind shear in the manner described in Section IIB. Turbulence magnitudes should be ascertained as a function of altitude and time. It also should be determined how closely turbulent fluctuations approximate a stationary random process.*

To measure time and spatial variations in horizontal winds, off-vertical viewing is mandatory. As mentioned, Eulerian and Lagrangian scanning techniques can be employed to separate wind variations due to time and distance. Such information would be useful in interpreting the validity of a measured wind profile (balloon, smoke trail or radar technique) for subsequent application to predicted or observed missile behavior.

Wherever possible, radar measurement experiments should be designed to sample the atmosphere along a similar trajectory and within a comparable time period of a vertically rising missile. For example, turbulence measurements as a function of altitude might be obtained by varying the range gate of

*It is frequently assumed that small-scale features of the wind approximate a stationary random process.

the vertically pointing radar to sample sequentially from the minimum to maximum target range during a time compatible with the time spent by a missile over this path length. (Missile traverse times in the troposphere are compatible with minimum radar sampling times.)

In summary, Doppler radar constitutes a useful measurement tool for evaluating atmospheric wind structure of importance in missile design and guidance. The recommended investigation should strive, via theoretical and/or experimental means, to define the following elements:

1. Turbulence intensity and variations with altitude.
2. Scale size of turbulence versus altitude.
3. Relationship between turbulence and properties of the average velocity profile (wind magnitude, shear).
4. Turbulence behavior with reference to a stationary random process.
5. Variations of the mean and of the variance (σ^2) of the horizontal wind with time.
6. Variations of the mean and of the variance of the horizontal wind with distance.
7. Relationship between the variance of a velocity distribution and mean wind magnitude.
8. Consolidation of mean wind, wind shear, and turbulence characteristics into rational criteria for missile response interpretation.