RE-ORDER NO. 62-691

Copy No. 13

EVALUATION OF CRITICAL PROPERTIES OF SELECTED MATERIALS FOR ELECTRONIC PACKAGING PURPOSES

Final Report RML-4
5 March 1962 through 30 June 1962

1 August 1962

Purchase Order No. F2-177911
Project No. 520-277

Research Conducted for:

Jet Propulsion Laboratory
4800 Oak Grove Avenue
Pasadena, California

Jay W. DeDapper
President

CASE FILE COPY

1 August 1962

Redel INCORPORATED
Anaheim, California

1 of 78

TABLE OF CONTENTS

		Page No.
I.	INTRODUCTION	1
II.	Materials, Processes and Experimental Techniques Utilized	2
	A. Materials	2
	B. Test Specimen Preparation	4
	C. Test Procedures	5
	D. Environments	9
III.	Presentation and Analysis of Test Results	14
	A. Adhesive, Eccobond 55	14
	B. Conformal Coating, TUF-ON 747S, Cure 1	18
	C. Conformal Coating, TUF-ON 747S, Cure 2	23
	D. Conformal Coating, Solithane 113, Cure 1	29
	E. Conformal Coating, Solithane 113, Cure 2	34
	F. Potting Compound, Stycast 1090, Cure 1	41
	G. Potting Compound, Stycast 1090, Cure 2	48
	H. Foam Potting Compound, Eccofoam FP	57
	I. Foam Potting Compound, Eccofoam FPH	64
IV.	Conclusions	74
V.	Recommendations	75

ABSTRACT

21313

An extensive examination of selected mechanical, electrical and physical properties of a group of commercially available polymeric materials, including epoxy and polyurethane coatings, adhesives, potting compounds and foams, has been made according to ASTM standards but under vacuum conditions of 10^{-4} to 10^{-6} Torr and over a temperature range of -40°F to +300°F. Not only were measurements made on samples after 24 hours exposure to the various combined environments, but also while the materials were in those environments. Comparative one atmosphere values were also taken.

In general, no catastrophic changes were noted in the properties of any of the materials measured in vacuum compared with their characteristic one atmosphere values at equivalent temperatures. Increasing temperatures caused more noticeable changes in most cases than the short time vacuum exposures.

Unique equipment and fixtures for accomplishing the various tests on samples while in combined thermal-vacuum environments are also described.

RML-4
1 August 1962

EVALUATION OF CRITICAL PROPERTIES OF SELECTED MATERIALS FOR ELECTRONIC PACKAGING PURPOSES

I. INTRODUCTION

In this fourth and final monthly progress report a summary is presented of a program conducted to measure certain significant properties of selected non-metallic materials under environmental extremes including simulated extraterrestrial conditions.

Materials utilized in the study were those required in Jet Propulsion Laboratory Specification No. 20060 and represented those used currently for electronic component assembly and protection. The test methods were recommended by the contractor and accepted by Jet Propulsion Laboratory by means of incorporation of the Redel proposal suggesting them into the purchase order.

In accordance with the original proposal, which formed the basis for the work reported herein, certain mechanical tests were performed under subcontract by Truesdail Laboratories, Los Angeles. All other work was performed by Redel at Anaheim, California during the period of 1 March to 15 July 1962.

With this report the program has been completed; for that reason a review of the experimental techniques utilized and a critical analysis of the data obtained are included also.

II. MATERIALS, PROCESSES AND EXPERIMENTAL TECHNIQUES UTILIZED

A. Materials

With the exception of a second conformal coating which was subsequently added, all materials tested were those outlined in Jet Propulsion Laboratory Specification No. 20060. Run-of-the-factory samples were purchased without requirements being placed upon the supplier for special preparation or handling.

1. Adhesive

Name:	Eccobond 55 with 12% (wt.) of No. 9 Catalyst
Source:	Emerson and Cuming, Incorporated
Use:	Circuit board to circuit board bonding Circuit board to metal bonding Metal to metal bonding
Cure:	Six hours at room temperature; contact pressure only

2. Conformal Coating - 1

Name:	Tuf-On 747S (Mil-V-173)
Source:	Brooklyn Paint and Varnish Company
Use:	Circuit boards
Cure:	(1) Twenty-four hours at room temperature (2) Four hours at 165°F

Conformal Coating - 2

Name:	Solithane 113 with 73% (wt.) No. 300 Catalyst
Source:	Thiokol Chemical Corporation
Use:	Circuit boards
Cure:	(1) Twenty-four hours at room temperature (2) Four hours at 165°F

3. Potting Compound (Solid)

Name:	Stycast 1090 with 9% (wt.) Catalyst No. 9 or 12% (wt.) Catalyst No. 11
Source:	Emerson and Cuming, Incorporated
Use:	Embedments
Cure:	(1) Twenty-four hours at room temperature (Catalyst No. 9) (2) Two hours at 212°F (Catalyst No. 11)

4. Potting Compound (Foam) - 1

Name:	Eccofoam FP (or S) with 11% (wt.) No. 12-6 Catalyst (6 lbs/cu. ft. density)
Source:	Emerson and Cuming, Incorporated
Use:	Subassembly potting
Cure:	Twenty-four hours at room temperature
Seal:*	Eccocoat 200, one coat, air dry

Potting Compound (Foam) - 2

Name:	Eccofoam FPH (or SH) with 75% (wt.) No. 12-6H Catalyst (6 lbs/cu. ft. density)
Source:	Emerson and Cuming, Incorporated
Use:	Subassembly potting (high temperature)
Cure:	Twenty-four hours at room temperature
Seal:*	Eccocoat 200, one coat, air dry

*Eccocoat 200 was used as a sealer on electrical specimens only, since the physical and mechanical properties were not influenced by the thin coating produced.

B. Test Specimen Preparation

1. General Remarks

At the request of Jet Propulsion Laboratory, statistically significant sampling was not to be utilized in the program. Thus, the number of replications used in each test vary from two to five, with the latter number used for those tests considered to be most meaningful. All aluminum utilized conformed to type 6061-T6; all epoxy-glass laminates were type GE. Samples were not tested prior to two weeks after preparation.

2. Adhesive - Eccobond 55

a. Epoxy-glass to epoxy-glass (1/16" thick)
b. Epoxy-glass to aluminum (1/16" thick)
c. Aluminum to aluminum

Average glue line thickness 0.003-0.004"

Substrates rubbed with crocus cloth, then solvent wiped before bonding.

Bonding and curing cycles as noted.

Contact pressure only during curing.

3. Conformal Coatings - Tuf-On 747S, Solithane 113

a. Epoxy-glass substrates (1/16" thick)
b. Aluminum substrates (1/16" thick)

Multiple spray and dip applications on solvent wiped substrates.

Average thickness 0.006-0.008".

Curing cycles as noted.

4. Potting Compounds, Solid-Stycast 1090

Specimens machined from blocks cast and cured as noted.

Dimensions and tolerances as required by specific test methods.

5. Potting Compounds, Foam - Eccofoam FP, Eccofoam FPH

Specimens machined from blocks cast and cured as noted.

Dimensions and tolerances as required by specific test methods.

Eccocoat 200 applied by dipping after machining specimens*

*Eccocoat 200 applied to electrical test specimens only.

C. Test Procedures

For ease of reporting, the detailed test procedures are not reproduced herein; reference should be made to the appropriate ASTM volumes for this information. Special note is made of specimen size and shape and of special fixtures, where used.

1. Mechanical

a.	Tensile Strength	ASTM D638 (5 replications)	Standard specimens
b.	Tensile Shear	ASTM D1002 (5 replications)	Standard specimens
c.	Compressive Strength	ASTM D695 (5 replications)	Solid: 1/2" x 1/2" x 1" long specimens Foam: 1" x 1" x 2" long specimens
d.	Cleavage Strength	ASTM D1062 (5 replications)	Standard specimens

For these tests, standard grips and extensiometers were used as specified in A.S.T.M. Methods. The extensiometers and recorders were linear transducers supplied by Tinius-Olsen Company and manufactured by Atcotran. A Tinius-Olsen Model 60 Universal Testing Machine was used for all tests. The general chamber arrangement is shown in Figure 1.

For specimens to be compression tested under vacuum, it was necessary to design a test jig which would permit the application of a tensile load, since the load had to be applied by means of a 1/2" rod passing through a double vacuum seal. This test jig is shown in Figure 2. It was also equipped with an Atcotran linear transducer and performed very satisfactorily.

e.	Adhesion (wet tape test)	Federal Test Method 141 (6351) (3 replications)	Coatings: Applied to 1/16" x 1" x 6" specimens.

Tests "a", "b", "c" and "d" were performed by Truesdail Laboratories (Los Angeles) under subcontract; test "e" by Redel Incorporated.

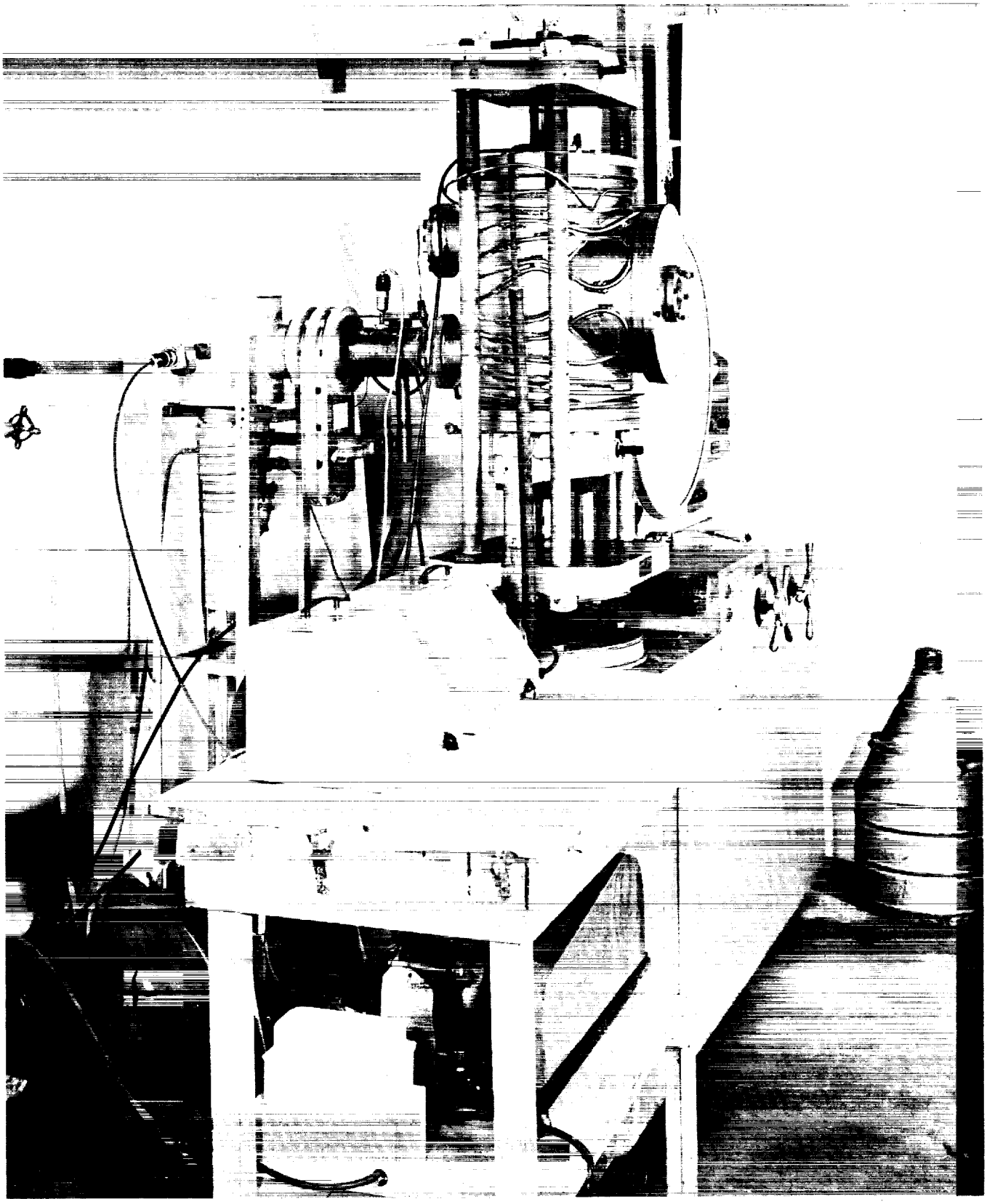

FIGURE 1
TESTING MACHINE, VACUUM CHAMBER AND VACUUM EQUIPMENT

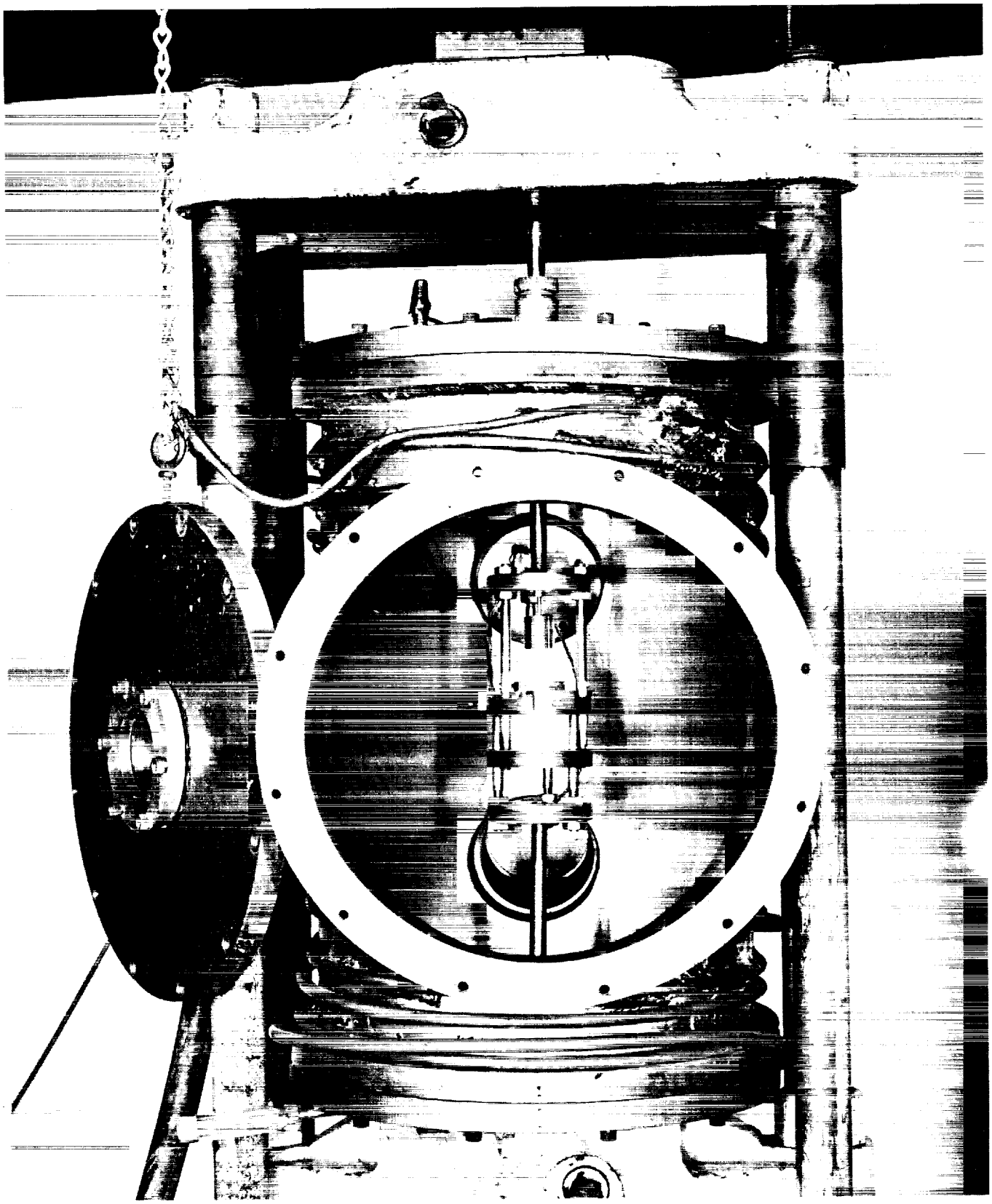

FIGURE 2
COMPRESSION TEST FIXTURES

2. Electrical			All Tests
a.	Volume Resistivity	ASTM D257 (3 replications)	Solids: 1/8" x 2" diameter discs
b.	Surface Resistivity	ASTM D257 (3 replications)	Foams: 1/4" x 2" diameter discs
c.	Insulation Resistance	ASTM D257 (3 replications)	Coatings: Applied to 2" diameter aluminum discs
d.	Dielectric Constant at 60 cycles, 10^6 cycle	ASTM D150 (3 replications)	Adhesive: 1/8" x 2" diameter solid discs
e.	Dissipation Factor at 60 cycles, 10^6 cycle	ASTM D150 (3 replications)	
f.	Dielectric Strength at 60 cycles	ASTM D149 (3 replications)	

All tests were performed by Redel. Resistivity test measurements were made using a General Radio 544B Megohm Bridge for the volume and surface resistivity measurements. Appropriate holding fixtures were fabricated for use with the instrument and inside the vacuum chamber with the aid of extension leads. Insulation resistance was then calculated from those measured resistivity values.

Dielectric constant and dissipation factor tests were made using a General Radio 1610 Capacitance Measuring Assembly with a guard circuit for measurements in the vacuum environment.

A high potential tester, previously designed and built by Redel, was used for dielectric strength tests. The instrument has an output range of 2KV to 100KV at 1 ma to 50 ma, and thus was able to cover the entire range of interest.

All materials utilized inside the vacuum chamber were chosen from groups known to have low outgassing properties, i.e., Teflon. All holding fixtures were brass.

3. Physical

a.	Moisture Absorption (Measured in water in flasks closed with condensers to maintain constant volume and thermostated to maintain constant temperature.)	ASTM D570 (3 replications)	Solids: 1/2" x 2" diameter discs Foams: 1/4" x 2" diameter discs Coatings and Adhesives: Applied to 2" diameter aluminum discs
b.	Thermal Expansion (See Figure 3 which is self explanatory)	ASTM D696 (3 replications)	1/4" x 1/4" x 2" long specimens
c.	Thermal Conductivity (Simple guarded hot plate rigged for dual samples)	ASTM C177-45 (3 replications)	1/4" x 2" diameter discs
d.	Density	ASTM D1564 (2 replications)	1" x 1" x 2" long specimens

All tests performed by Redel.

D. Environments

1. Temperature

T_1	-40°F	±	5°F	
T_2	+70°F	±	5°F	
T_3	+300°F	±	5°F	(Also + 165° ± 5°F for foams)*

*It was learned early in the experimental program that neither foam had significant strength at +300°F.

For Redel tests, all temperature environments at one atmosphere were obtained with hot and cold boxes. In the vacuum chamber, specimens were mounted into the appropriate test fixtures which in turn were mounted upon cored plates through which hot or cold fluids were circulated to obtain the temperature required.

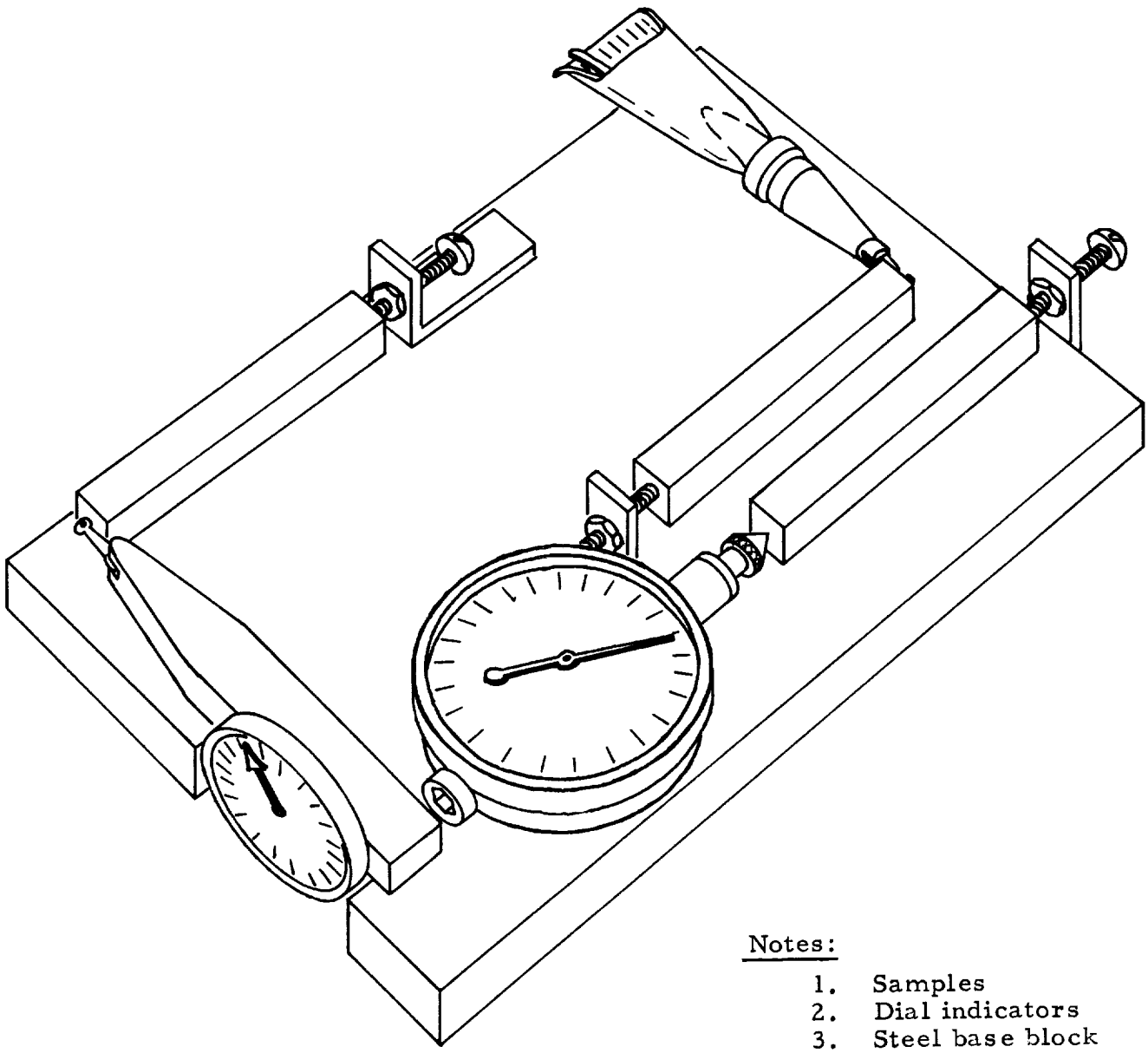

Notes:

1. Samples
2. Dial indicators
3. Steel base block (Tare values subtracted from all readings)

FIGURE 3

TEST ASSEMBLY FOR THERMAL EXPANSION MEASUREMENTS

2. Pressure

Condition A - One Atmosphere

Condition B - Sub-atmospheric, between 10^{-4} and 10^{-6} Torr depending upon material and test; specific test pressures as recorded with data. Tests performed when vacuum regimes, as noted, were established.

Condition C - One atmosphere after twenty-four hours exposure to vacuum between 10^{-4} and 10^{-6} Torr and temperature noted depending upon material and test. Tests performed within twenty-four hours after exposure. Desiccator storage of samples.

a. Pumping System

The space simulation equipment used at Redel is based upon an Ulmer unit consisting of a water cooled diffusion pump and a Welch mechanical backing pump. This combination provides a system which allows complete recycling from air release through roughouts and high vacuum pumping of an 18" x 30" bell jar in less than ten minutes. The system is capable of creating atmospheres from 10^{-4} to 10^{-7} Torr and less, depending on the outgassing of the materials being studied, the size of the vacuum chamber, and the time of exposure.

The vacuum equipment used by Truesdail was designed and fabricated to Truesdail Laboratories, Incorporated specifications. The chamber in which the tests were made was constructed of nickel plated steel and provided with water cooling for use at elevated temperatures. All flanges were equipped with high vacuum "0" rings. Electrical connections were made with glass sealed leadins or Teflon bushed connectors. Plastic material used on the inside of the chamber (wiring, extensiometer parts) were of Teflon.

The vacuum test chamber was connected through vacuum valves and a liquid nitrogen trap to a 700 liter/sec. diffusion pump and a 13 cfm mechanical pump. The fore pump pressure was determined by means of a thermocouple gauge and the vacuum produced by the diffusion pump was measured by means of a cold cathode ionization gauge. These gauges were calibrated against each other and also by use of a McLeod Gauge. With the testing equipment inside the chamber, but without test specimens, the equipment would achieve a vacuum in excess of 10^{-7} Torr (the limit of Truesdail's measuring equipment.) Temperature measurements were made by means of chromel alumel thermocouples. The tests at elevated temperatures were made using radiant heaters and those at subambient temperatures by means of dry ice packed around the test chamber. Specimens were thermocoupled.

b. Gauging System

The Redel instrumentation system utilizes dual thermocouple gauge controls and a triple range, cold cathode gauge control with two separate thermocouple gauge tube meters. Each thermocouple gauge tube is metered so that both the fore line and the manifold pressures are continually monitored. Careful observation of the thermocouple gauge reading of the fore line pressure provides knowledge relative to the condition of the mechanical pump or the outgassing of material in the high vacuum system. The gauges read pressures from 25 microns to 10^{-7} Torr.

c. Chamber

At Redel, a cylindrical, cross-shaped, Pyrex chamber, shown in Figure 4, having an internal volume of about one cubic foot and equipped with thirty-six electrical leads arranged in each end plate and in the top, plus fluid feed leads for temperature control, was used for this program. The large number of leads permitted simultaneous measurements of several variables on a multiplicity of samples or highly instrumented tests on a smaller number of samples, i.e., thermal conductivity. Generally three replications were run simultaneously for electrical and physical property tests. Mechanical tests were run individually.

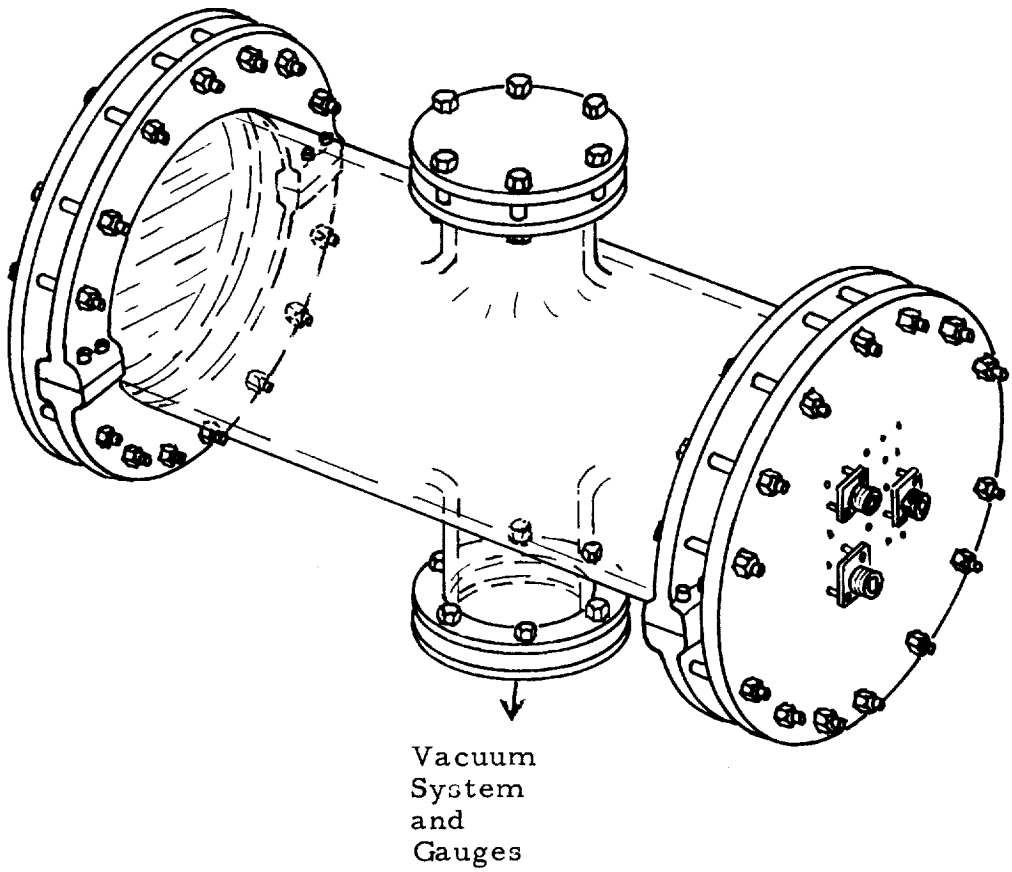

Notes:

1. Removable plates with various lead-throughs

FIGURE 4

REDEL VACUUM TEST CHAMBER

A. Adhesive, Eccobond 55 (Emerson and Cuming, Inc.)
Catalyst No. 9 (12% by weight)

MECHANICAL PROPERTIES

Tensile Shear, ASTM D1002 (#/in²)

	At 1 Atm	At 6 x 10^{-5} Torr	At 1 Atm and 70°F after 24 hours at 70°F 2 x 10^{-5} Torr
Aluminum/Aluminum			
At -40°F	545 (477-630)	603 (574-669)	672 (572-797)
+70°F	463 (361-597)	751 (687-835)	561 (455-656)
+300°F	146 (111-181)	<1 (0-1)	184 (176-269)
Aluminum/Epoxy-glass			
-40°F	400 (345-539)	356 (321-394)	553 (365-814)
+70°F	503 (382-665)	402 (358-488)	339 (328-465)
+300°F	87 (80-91)	<1 (0-1)	145 (126-188)
Epoxy-glass/Epoxy-glass			
-40°F	1,940 (1537-2347)	2,140 (1840-2500)	2,357 (2296-2582)
+70°F	2,076 (1847-2333)	2,201 (2055-2295)	2,020 (1870-2270)
+300°F	86 (79-95)	<1 (0-1)	102 (75-147)

Cleavage Strength, ASTM D1062 (#/in²)

	At 1 Atm	At 6 x 10^{-5} Torr	At 1 Atm and 70°F after 24 hours at 70°F 2 x 10^{-5} Torr
Aluminum/Aluminum			
-40°F	621 (496-711)	446 (321-545)	655 (375-947)
+70°F	690 (477-1010)	561 (389-918)	505 (312-719)
+300°F	92 (86-169)	169 (151-182)	107 (82-137)
Aluminum/Epoxy-glass			
-40°F	632 (432-931)	485 (429-528)	542 (383-754)
+70°F	389 (149-580)	602 (429-806)	486 (274-648)
+300°F	32 (14-54)	55 (40-74)	29 (20-34)
Epoxy-glass/Epoxy-glass			
-40°F	489 (300-703)	961 (944-970)	561 (334-868)
+70°F	717 (613-869)	553 (401-691)	484 (428-521)
+300°F	55 (34-84)	169 (151-182)	39 (32-47)

(Range of Values)

A. Adhesive, Eccobond 55 (Emerson and Cuming, Inc.) (cont'd.)
Catalyst No. 9 (12% by weight)

ELECTRICAL PROPERTIES

	At 1 Atm	At 1×10^{-5} Torr	At 1 Atm and 70°F after 24 hours at 70°F and 1×10^{-5} Torr
Volume Resistivity, ASTM D257 (ohms/cm^3)			
-40°F	1.0×10^{15} (1.0)	1.2×10^{14} (1.2)	8.6×10^{14} (8.6)
-70°F	7×10^{14} (6.8-7.2)	6.4×10^{14} (5.9-6.9)	6.4×10^{14} (5.9-6.9)
+300°F	2.2×10^{11} (1.8-2.4)	2.6×10^{10} (2.3-2.9)	6×10^{14} (5.8-6.2)
Surface Resistivity, ASTM D257, (ohms)			
-40°F	1.1×10^{15} (1.0)	1.2×10^{15} (1.1-1.2)	8.9×10^{14} (8.1-9.0)
+70°F	7.4×10^{14} (7.2-7.6)	6.1×10^{14} (5.8-6.3)	6×10^{14} (6.0-6.1)
+300°F	2×10^{11} (1.8-2.2)	2×10^{10} (2.0-2.1)	2.5×10^{14} (2.3-2.7)
Insulation Resistance, ASTM D257, (ohms/cm)	(0.125 in. sample)		
-40°F	6.8×10^{14}	6.0×10^{14}	4.4×10^{14}
+70°F	3.6×10^{14}	3.1×10^{14}	3.1×10^{14}
+300°F	1.1×10^{11}	1.1×10^{10}	1.8×10^{14}

PHYSICAL PROPERTIES

Moisture Absorption ASTM D570 (% weight gain)			
At 70°F	0.45 (.36-.87)	Not taken	0.11 (.09-.13)
At 165° F	0.59 (.51-.60)	Not taken	0.11 (.10-.11)

1. Mechanical

As measured by tensile shear and cleavage tests with plastic to plastic, metal to metal and metal to plastic specimens, Eccobond 55 adhesive maintains characteristic one atmosphere strengths at -40°F and +70°F at 10^{-5} Torr and at one atmosphere after 24 hours soak at 10^{-5} Torr. However, at +300°F serious reductions in shear and cleavage strengths with all specimens were noted at one atmosphere and also after vacuum soak; complete loss in shear strength was measured at 300°F and 10^{-5} Torr. In somewhat of an anomaly, 24 hours vacuum exposure increased the 300°F tensile shear strength subsequently measured on all specimen types at one atmosphere and at almost every temperature. Cleavage strength did not appear to be affected similarly in such a clear-cut manner.

The relatively poor strength recorded with metal specimens in general is attributed to the surface preparation (crocus cloth abrasion and solvent cleaning) which was selected to be representative of typical assembly procedures. Of course, optimum surface preparation is necessary for maximum strengths. The range in values obtained at all environments is felt to be a reflection of surface preparation, also. Eccobond 55 would appear to be less satisfactory for metal to metal bonding than for epoxy-glass to epoxy-glass bonding.

In general, if the one atmosphere strengths of adhesively bonded joints are adequate for a given design it is concluded that exposure to 10^{-5} Torr up to 24 hours will not seriously degrade those strengths except at elevated temperatures in the 300°F region where marginal performance is to be anticipated with Eccobond 55, anyway. At this temperature, thermal degradation is probably more serious than short-time vacuum exposure.

2. Electrical

Resistivity of Eccobond adhesive was not found to be reduced significantly by exposure to 10^{-5} Torr conditions. High temperature (300°F) surface and volume resistivity of the adhesive actually improved by three orders of magnitude after 24 hours exposure to 10^{-5} Torr over values obtained at the same temperature but without vacuum exposure. (Strengths were seriously reduced at these temperatures in vacuum, however.) In vacuum, an order of magnitude drop was noted from resistance values measured at one atmosphere.

In one atmosphere tests, but after 24 hours of 10^{-5} Torr exposure of the samples, 300°F resistivity values did not drop the 2-3 orders of magnitude characteristically encountered as temperature increases from +70 to +300°F. In vacuum, however the customary decrease was noted. No explanation is offered for this observation.

3. Physical

The already low moisture absorption of Eccobond 55 was reduced by a factor of four after 10^{-5} Torr exposure of the adhesive for 24 hours. Some outgassing was noted with Eccobond 55 samples; however, the 10^{-5} Torr regime was regularly established in about one hour at 70°F with the material. (This compares to 20-22 hours for the Eccofoam FP and FPH potting compounds.)

B. Conformal Coating, TUF-ON 747S (Brooklyn Paint and Varnish Company) Cure 1. Room Temperature for 24 hours

MECHANICAL PROPERTIES

Adhesion, Federal Test Method 141 (6301)
(3 replications)

	At 1 Atm	After 24 hours at 2×10^{-5} Torr
At 70°F		
On Aluminum	Fail	Fail
On Epoxy-glass	Pass	Pass

ELECTRICAL PROPERTIES

B. Conformal Coating, TUF-ON 747S (Brooklyn Paint and Varnish Company). Cure 1. Room Temperature for 24 hours (cont'd.)

	At 1 Atm	At 1×10^{-5} Torr	At 1 Atm and 70°F after 24 hours at 70°F and 1×10^{-5} Torr
Volume Resistivity ASTM D257 (ohm/cm³)			
-40°F	3.9×10^{13} (3.4-3.2)	4.1×10^{13} (3.9-4.2)	2.6×10^{13} (2.1-2.7)
+70°F	2.5×10^{13}	2.6×10^{13}	2.5×10^{13}
+300°F	1.5×10^{10}	2.1×10^{10}	2.0×10^{10}
Surface Resistivity ASTM D257 (ohms)			
-40°F	16.1×10^{13} (16.3-16.0)	18.0×10^{13} (19.0-17.5)	15.7×10^{15} (15.1-16.0)
+70°F	12.5×10^{13}	11.7×10^{13} (10.9-11.8)	12.5×10^{13}
+300°F	5.0×10^{10} (4.8-5.2)	6.2×10^{10} (6.8-6.6)	12.0×10^{10} (11.9-12.6)
Insulation Resistance ASTM D257 (ohm/cm)			
-40°F	3.15×10^{13}	3.5×10^{13}	2.2×10^{13}
+70°F	2.1×10^{13}	2.1×10^{13}	2.1×10^{13}
+300°F	1.32×10^{10}	1.5×10^{10}	1.7×10^{10}
Capacitance at 60 cycles/second ASTM D150 (mmfd)			
-40°F	2.1 (2.3-1.8)	2.6 (2.2-2.4)	2.3 (2.2)
+70°F	2.3 (1.9-2.5)	2.4 (2.1-2.5)	1.8 (1.7-1.9)
+300°F	1.9 (2.1-1.8)	2.1 (2.3-2.5)	2.4 (2.1-2.6)

ELECTRICAL PROPERTIES

B. Conformal Coating, TUF-ON 747S (Brooklyn Paint and Varnish Company). Cure 1. Room Temperature for 24 hours. (cont'd.)

	At 1 Atm	At 1 x 10^{-5} Torr	At 1 Atm and 70°F after 24 hours at 70°F and 1 x 10^{-5} Torr.
Capacitance at 10^6 cycles/second ASTM D150 (mmfd)			
-40°F	2.0 (1.9-1.7)	2.1 (1.8-1.9)	2.3 (2.1-1.8)
+70°F	2.2	1.9 (1.7-1.8)	2.1 (1.8-2.3)
+300°F	2.4 (2.1-2.6)	2.3 (2.1-1.9)	1.7 (1.5-1.8)
Dielectric Constant at 60 cycles/second ASTM D150			
-40°F	1.09	1.11	1.10
+70°F	1.10	1.10	1.07
+300°F	1.08	1.09	1.10
Dielectric Constant at 10^6 cycles/second ASTM D150			
-40°F	1.08	1.09	1.10
+70°F	1.09	1.08	1.07
+300°F	1.10	1.09	1.10
Dissipation Factor at 60 cycles/second ASTM D150			
-40°F	.0001	.0002	.0001
+70°F	.0001	.0002	.0001
+300°F	.0002	.0002	.0001

B. Conformal Coating, TUF-ON 747S (Brooklyn Paint and Varnish Company). Cure 1. Room Temperature for 24 hours. (cont'd.)

ELECTRICAL PROPERTIES

	At 1 Atm	At 1×10^{-5} Torr	At 1 Atm and 70°F after 24 hours at 70°F and 1×10^{-5} Torr
Dissipation Factor at 10^6 cycles/second ASTM D150			
-40°F	.0001	.0002	.0001
+70°F	.0001	.0002	.0001
+300°F	.0002	.0002	.0001
Dielectric Strength at 60 cycles/second ASTM D149 (volts/mil)			
-40°F	350	350	300
+70°F	300	300	300
+300°F	300	290	300

B. Conformal Coating, TUF-ON 747S (Brooklyn Paint and Varnish Company) Cure 1. Room Temperature for 24 hours, (cont'd.)

PHYSICAL PROPERTIES

Moisture Absorption, ASTM D570 (3 replications)
(% weight gain)

	At 1 Atm	After 24 hours at 2×10^{-5} Torr
At 70°F	0.32 (.12-.59)	0.03 (-.05→+.07)
At 165°F	0.0 (+.3→-.3)	0.2 (-.2→+.7)

C. Conformal Coating, TUF-ON 747S (Brooklyn Paint and Varnish Company) Cure 2. 165°F for 4 hours

MECHANICAL PROPERTIES

Adhesion, Federal Test Method 141 (6301)
(3 replications)

	At 1 Atm	After 24 hours at 2×10^{-5} Torr
At 70°F		
On Aluminum	Fail	Fail
On Epoxy-glass	Fail	Fail

ELECTRICAL PROPERTIES

C. Conformal Coating, TUF-ON 747S (Brooklyn Paint and Varnish Company), Cure 2. 165°F for 4 hours (cont'd)

	At 1 Atm	At 1 x 10^{-5} Torr	At 1 Atm and 70°F after 24 hours at 70°F and 3 x 10^{-5} Torr
Volume Resistivity ASTM D257 (ohm/cm^3)			
-40°F	3.1 x 10^{13} (3.4-3.5)	3.9 x 10^{13} (3.7-4.1)	3.0 x 10^{13} (2.7-3.1)
+70°F	2.5 x 10^{13} (2.1-2.4)	3.4 x 10^{13} (3.0-3.6)	2.5 x 10^{13} (2.1-1.9)
+300°F	2.0 x 10^{10} (2.1-1.8)	2.2 x 10^{10} (2.3-1.9)	2.0 x 10^{10} (1.7-2.3)
Surface Resistivity ASTM D257 (ohm)			
-40°F	5.0 x 10^{14} (4.9-5.3)	5.7 x 10^{14} (5.1-4.9)	2.4 x 10^{14}
+70°F	2.5 x 10^{14} (2.6-2.3)	3.8 x 10^{14} (3.1-4.2)	2.5 x 10^{14} (2.4-2.6)
+300°F	6.0 x 10^{10} (5.8-6.4)	5.7 x 10^{10} (4.9-5.5)	2.0 x 10^{10} (2.2-1.9)
Insulation Resistance ASTM D257 (ohm/cm)			
-40°F	1.92 x 10^{13}	2.3 x 10^{13}	1.35 x 10^{13}
+70°F	1.25 x 10^{13}	1.8 x 10^{13}	1.26 x 10^{13}
+300°F	1.5 x 10^{10}	1.59 x 10^{10}	1.0 x 10^{10}

ELECTRICAL PROPERTIES

C. Conformal Coating, TUF-ON 747S (Brooklyn Paint and Varnish Company). Cure 2. 165°F for 4 hours (cont'd.)

	At 1 Atm	At 1 x 10^{-5} Torr	At 1 Atm and 70°F after 24 hours at 70°F and 3 x 10^{-5} Torr
Capacitance at 60 cycles/second ASTM D150 (mmfd)			
-40°F	2.4 (2.1-1.9)	2.7 (2.1-1.9)	2.2 (2.4-2.1)
+70°F	2.0 (2.2-1.9)	2.8 (2.7-1.9)	2.0 (2.4-1.9)
+300°F	2.7 (2.3-2.1)	2.5 (2.3-2.6)	1.7 (1.9-1.5)
Capacitance at 10^6 cycles/second ASTM D150 (mmfd)			
-40°F	2.4 (1.9-2.5)	2.6 (2.4-2.1)	2.5 (2.1-1.8)
+70°F	2.0 (1.8-2.3)	1.9 (2.2-1.7)	2.0 (2.1-1.9)
+300°F	2.1 (2.4-2.0)	2.4 (2.6-1.9)	1.9 (1.8-2.2)
Dielectric Constant at 60 cycles/second ASTM D150			
-40°F	1.15	1.15	1.10
+70°F	1.08	1.12	1.08
+300°F	1.14	1.16	1.07

ELECTRICAL PROPERTIES

C. Conformal Coating, TUF-ON 747S (Brooklyn Paint and Varnish Company) Cure 2. 165°F for 4 hours (cont'd.)

	At 1 Atm	At 1 x 10^{-5} Torr	At 1 Atm and 70°F after 24 hours at 70°F and 3 x 10^{-5} Torr
Dielectric Constant at 10^6 cycles/second ASTM D150			
-40°F	1.10	1.09	1.11
+70°F	1.08	1.08	1.08
+300°F	1.09	1.10	1.08
Dissipation Factor at 60 cycles/second ASTM D150			
-40°F	.0001	.0002	.0001
+70°F	.0001	.0002	.0001
+300°F	.0002	.0002	.0001
Dissipation Factor at 10^6 cycles/second ASTM D150			
-40°F	.0001	.0001	.0001
+70°F	.0001	.0001	.0001
+300°F	.0002	.0001	.0001
Dielectric Strength at 60 cycles/second ASTM D149 (volts/mil)			
-40°F	325	304	370
+70°F	350	340	340
+300°F	300	290	375

C. Conformal Coating, TUF-ON 747S (Brooklyn Paint and Varnish Company) Cure 2. 165°F for 4 hours cont'd.

PHYSICAL PROPERTIES

Moisture Absorption, ASTM D570, (3 replications)
(% weight gain)

	At 1 Atm	After 24 hours at 3×10^{-5} Torr
At 70°F	0.31 (.25-.36)	0.08 (.06-.12)
At 165°F	-0.23 (-.15→-.40)	-0.4 (-.39→-.47)

1. Mechanical

Wet tape adhesion tests indicate TUF-ON 747S to have relatively poor adhesion on aluminum and epoxy-glass at room environments. Vacuum exposure for 24 hours at 10^{-5} Torr did not degrade the adhesion to epoxy-glass nor did it improve adhesion to aluminum. Curing at 165°F does not appear to be beneficial in improving adhesion obtained either after vacuum exposure or at ambient environment.

2. Electrical

Resistivity (surface, volume, insulation) of TUF-ON 747S did not appear to be dependent upon curing cycle, although slightly higher values were maintained at +300°F with the elevated temperature cured material. Changes in resistivity due to vacuum exposure were nominal for both cures.

Dielectric constant at 60 cycles was essentially the same for both cures at each test temperature measured at one atmosphere and also measured in vacuum and after vacuum exposure. At 10^6 cycles, dielectric constant was not significantly influenced by vacuum exposure; increasing temperature resulted in slight changes, which were about equivalent to those induced by vacuum exposure.

Dissipation factors at 60 cycles were in the same magnitude for all specimens, except that values obtained in vacuum were twice those measured at one atmosphere, i.e., 0.0002 compared with 0.0001.

At 10^6 cycles, the room temperature cured TUF-ON behaved in a similar manner, while the elevated temperature cured material was unaffected by vacuum.

Dielectric Strengths for both cures in vacuum were somewhat reduced from one atmosphere values at each temperature.

3. Physical

In general vacuum exposure for 24 hours reduced moisture absorption measured on unexposed samples; in a few cases, however, leaching of a portion of the coating was noted (as evidenced by weight loss in the 165°F water soak test). No significant differences were noted between room and 165°F cured samples.

D. Conformal Coating, Solithane 113 (Thiokol Chemical Corporation) Cure 1. Catalyst No. 300-73% by weight. Room Temperature for 24 hours

MECHANICAL PROPERTIES

Adhesion, Federal Test Method 141 (6301)
(3 replications)

	At 1 Atm	After 24 hours at 2×10^{-5} Torr
At 70°F		
On Aluminum	Fail	Fail
On Epoxy-glass	Pass	Pass

ELECTRICAL PROPERTIES

D. Conformal Coating, Solithane 113 (Thiokol Chemical Corporation)
Cure 1. Catalyst No. 300-73% by weight. Room Temperature for 24 hours (cont'd.)

	At 1 Atm	At 1×10^{-4} Torr	At 1 Atm and 70°F after 24 hours at 70°F and 3×10^{-4} Torr
Volume Resistivity ASTM D257 (ohm/cm³)			
-40°F	1.0×10^{13} (1.0)	1.4×10^{13} (1.4)	9.4×10^{12} (9.1 x 9.6)
+70°F	9.6×10^{12} (9.2-9.9)	9.8×10^{12} (9.8-9.9)	1.0×10^{13} (1.0)
+300°F	1×10^{10} (1.0-1.2)	1.5×10^{10} (1.3-1.6)	9.0×10^{10} (9.0-9.1)
Surface Resistivity ASTM D257 (ohms)			
-40°F	1.0×10^{15} (1.0)	1.26×10^{15} (1.2-1.4)	1.44×10^{15} (1.44-1.46)
+70°F	9.9×10^{14} (9.7-10.1)	1.02×10^{15} (1.01-1.03)	1.11×10^{15} (1.10-1.12)
+300°F	2.5×10^{10} (2.4-2.6)	2.4×10^{10} (2.3-.25)	9.5×10^{10} (9.3-9.7)
Insulation Resistance ASTM D257 (ohm/cm)			
-40°F	1.09×10^{13}	1.39×10^{13}	1.02×10^{14}
+70°F	4.9×10^{12}	5.2×10^{12}	5.3×10^{12}
+300°F	7.14×10^{9}	9.25×10^{9}	8.59×10^{9}
Capacitance at 60 cycles/Second ASTM D150 (mmfd)			
-40°F	17.0 (16.5-17.4)	15.8 (13.5-7.1)	21.7 (18.9-25.2)
+70°F	22.0 (21.8-22.2)	23.0 (22.5-23.4)	22.5 (22.1-22.9)
+300°F	24.0 (23.9-24.0)	24.3 (24.0-24.5)	22.8 (22.1-23.2)

ELECTRICAL PROPERTIES Cont'd.

D. Conformal Coating, Solithane 113 (Thiokol Chemical Corporation)
Cure 1. Catalyst No. 300-73% by weight. Room Temperature for 24 hours (cont'd.)

	At 1 Atm	At 1 x 10^{-4} Torr	At 1 Atm and 70°F after 24 hours at 70°F and 3 x 10^{-4} Torr
Capacitance at 10^6 cycles/second ASTM D150 (mmfd)			
-40°F	20.2 (19.1-21.3)	19.2 (16.1-21.2)	16.5 (15.8-17.0)
+70°F	21.2 (20.5-22.0)	20.6 (20.0-21.3)	29.5 (20.0-21.0)
+300°F	24.9 (24.9-25.0)	25.5 (25.0-25.7)	22.7 (22.5-23.0)
Dielectric Constant at 60 cycles/second ASTM D150			
-40°F	3.01 (2.92-3.08)	2.76 (2.34-3.03)	3.97 (3.35-4.47)
+70°F	3.9 (3.86-3.94)	4.0 (3.95-4.17)	3.97 (3.91-4.07)
+300°F	4.25 (4.2-4.25)	4.26 (4.2-4.33)	4.0 (3.9-4.1)
Dielectric Constant at 10^6 cycles/second ASTM D150			
-40°F	3.57 (3.38-3.78)	3.39 (3.38-3.78)	2.59 (2.79-3.01)
+70°F	3.89 (3.62-3.72)	3.66 (3.56-3.74)	4.0 (3.95-4.1)
+300°F	4.42 (4.4-4.45)	4.50 (4.45-4.6)	4.0 (3.95-4.1)
Dissipation Factor at 60 cycles/second ASTM D150			
-40°F	0.090 (0.088-0.093)	0.091 (0.084-0.097)	0.087 (0.083-0.090)
+70°F	0.084 (0.083-0.084)	0.085 (0.085-0.086)	0.085 (0.084-0.086)
+300°F	0.075 (0.074-0.084)	0.075 (0.075)	0.075 (0.074-0.075)

ELECTRICAL PROPERTIES Cont'd.

D. Conformal Coating, Solithane 113 (Thiokol Chemical Corporation)
Cure 1. Catalyst No. 300-73% by weight. Room Temperature for 24 hours (cont'd.)

	At 1 Atm	At 1 x 10^{-4} Torr	At 1 Atm and 70°F after 24 hours at 70°F and 3 x 10^{-4} Torr
Dissipation Factor at 10^6 cycles/second ASTM D150			
-40°F	0.011 (0.010-.012)	0.010 (0.010)	0.011 (0.011)
+70°F	0.024 (0.023-0.024)	0.025 (0.024-0.025)	0.024 (0.024)
+300°F	0.012 (0.012-0.013)	0.014 (0.013-0.014)	0.024 (0.024)
Dielectric Strength at 60 cycles/second ASTM D149 (volts/mil)	(.046 inch specimen)		
-40°F	290.0	290.0	290.0
+70°F	250.0	260.0	260.0
+300°F	263.0	251.0	260.0

D. Conformal Coating, Solithane 113 (Thiokol Chemical Corporation) Cure 1. Catalyst No. 300-73% by weight. Room Temperature for 24 hours (cont'd.)

PHYSICAL PROPERTIES

Moisture Absorption, ASTM D570 (3 replications)
(% weight gain)

	At 1 Atm	After 24 hours at 1×10^{-5} Torr
At 70°F	1.44 (1.0-2.7)	1.6 (0.9-2.4)
At 165°F	1.4 (1.2-1.6)	0.8 (0.5-0.9)

E. Conformal Coating, Solithane 113 (Thiokol Chemical Corporation)
Cure 2. Catalyst 300-73% by weight. 165°F for 4 hours.

MECHANICAL PROPERTIES

Adhesion, Federal Test Method 141 (6301)
(3 replications)

	At 1 Atm	At 1 Atm and 70°F after 24 hours at 70°F and 1×10^{-5} Torr
At 70°F		
On Aluminum	Fail	Fail
On Epoxy-glass	Pass	Pass

ELECTRICAL PROPERTIES

E. Conformal Coating, Solithane 113 (Thiokol Chemical Corporation)
Cure 2. Catalyst 300-73% by weight. 165°F for 4 hours.

	At 1 Atm	At 1×10^{-5} Torr	At 1 Atm and 70°F after 24 hours at 70°F and 1×10^{-5} Torr
Volume Resistivity ASTM D257 (ohm/cm^3)			
-40°F	7.9×10^{13} (7.7-8.1)	9.9×10^{13} (9.7-10.2)	9.0×10^{13} (8.7-9.4)
+70°F	7×10^{13} (6.8-7.3)	7.2×10^{13} (7.1-7.4)	7.5×10^{13} (7.3-7.7)
+300°F	4×10^{12} (3.9-4.2)	5.1×10^{12} (4.8-5.3)	4.8×10^{12} (4.5-5.0)
Surface Resistivity ASTM D257 (ohms)			
-40°F	1.3×10^{15} (1.3)	1.5×10^{15} (1.5)	1.4×10^{15} (1.4)
+70°F	1.2×10^{15} (1.2)	1.3×10^{15} (1.27-1.32)	1.24×10^{15} (1.22-1.27)
+300°F	7.1×10^{12} (6.7-7.4)	6.8×10^{12} (6.2-7.1)	6.9×10^{12} (6.7-7.3)
Insulation Resistance ASTM D257 (ohm/cm)			
-40°F	6.6×10^{13}	6.8×10^{13}	7.1×10^{13}
+70°F	7.5×10^{13}	9.3×10^{13}	8.5×10^{13}
+300°F	6.89×10^{10}	6.7×10^{10}	6.8×10^{10}

ELECTRICAL PROPERTIES

E. Conformal Coating, Solithane 113 (Thiokol Chemical Corporation) Cure 2. Catalyst 300-73% by weight. 165°F for 4 hours.

	At 1 Atm	At 1×10^{-5} Torr	At 1 Atm and 70°F after 24 hours at 70°F and 1×10^{-5} Torr
Capacitance at 60 cycles/second ASTM D150 (mmfd)			
-40°F	18.6 (18.2-18.9)	19.4 (19.3-19.4)	20.0 (19.2-20.5)
+70°F	17.9 (17.7-18.0)	18.1 (17.9-18.5)	18.4 (18.1-18.6)
+300°F	20.3 (20.1-20.6)	19.8 (18.4-20.1)	20.4 (20.1-21.0)
Capacitance at 10^6 cycles/second ASTM D150 (mmfd)			
-40°F	19.0 (18.9-19.1)	19.7 (19.4-20.0)	20.0 (19.1-20.6)
+70°F	18.2 (18.0-18.4)	19.0 (18.5-19.2)	18.1 (18.0-18.3)
+300°F	19.1 (19.0-19.2)	20.1 (20.0-21.0)	21.3 (21.0-21.6)
Dielectric Constant at 60 cycles/second ASTM D150			
-40°F	3.30 (3.23-3.35)	3.42 (3.4-3.42)	3.54 (3.4-3.63)
+70°F	3.3 (3.14-3.56)	3.33 (3.21-3.56)	3.25 (3.21-3.30)
+300°F	3.60 (3.56-3.65)	3.43 (3.24-3.56)	3.63 (3.56-3.71)

ELECTRICAL PROPERTIES

E. Conformal Coating, Solithane 113 (Thiokol Chemical Corporation)
Cure 2. Catalyst 300-73% by weight, 165°F for 4 hours.

	At 1 Atm	At 1×10^{-5} Torr	At 1 Atm and 70°F after 24 hours at 70°F and 1×10^{-5} Torr
Dielectric Constant at 10^6 cycles/second ASTM D150			
-40°F	3.37 (3.35-3.39)	3.49 (3.44-3.55)	3.55 (3.38-3.66)
+70°F	3.22 (3.2-3.25)	3.36 (3.34-3.36)	3.21 (3.2-3.22)
+300°F	3.33 (3.38-3.39)	3.60 (3.55-3.70)	3.82 (3.7-3.89)
Dissipation Factor at 60 cycles/second ASTM D150			
-40°F	0.070 (.068-.071)	0.058 (.058-.061)	0.063 (.061-.068)
+70°F	0.081 (.080-.071)	0.079 (.078-.079)	0.078 (.077-.079)
+300°F	0.074 (.074-.075)	0.076 (.075-.076)	0.076 (.076)
Dissipation Factor at 10^6 cycles/second ASTM D150			
-40°F	0.02 (.019-.021)	0.019 (0.018-.02)	0.018 (.018-.019)
+70°F	0.022 (.022)	0.022 (.022)	0.022 (.022)
+300°F	0.015 (.015-.016)	0.016 (.016-.017)	0.019 (.017)

E. Conformal Coating, Solithane 113 (Thiokol Chemical Corporation) Cure 2. Catalyst 300-73% by weight. 165°F for 4 hours.

ELECTRICAL PROPERTIES

Dielectric Strength at 60 cycles/second ASTM D149 (0.048 in thick) (volts/mil)	At 1 Atm	At 1×10^{-5} Torr	At 1 Atm and 70°F after 24 hours at 70°F and 1×10^{-5} Torr
-40°F	280	280	280
+70°F	260	250	250
+300°F	240	236	242

E. Conformal Coating, Solithane 113 (Thiokol Chemical Corporation)
Cure 2. Catalyst 300-73% by weight. 165°F for 4 hours.

PHYSICAL PROPERTIES

Moisture Absorption, ASTM D570 (3 replications)
(% weight gain)

	At 1 Atm	At 1 Atm and 70°F After 24 hours at 70°F and 1 x 10^{-5} Torr
At 70°F	1.27 (1.0-1.6)	0.45 (0.2-0.8)
At 165°F	1.1 (0.9-1.2)	1.0 (1.0-2.1)

1. Mechanical

Adhesion (wet tape test) of Solithane 113 proved to be superior to that obtained with TUF-ON 747S. Solithane 113 performed satisfactorily on epoxy-glass laminates at ambient environments and after 24 hours exposure to 10^{-5} Torr. The material failed on aluminum in each circumstance which duplicated the results with TUF-ON 747S. Coatings cured at 165°F did not perform differently than those cured at room temperature.

2. Electrical

Resistivity (volume, surface, insulation) of elevated temperature cured Solithane 113 was generally better than for room cured material at each temperature. Vacuum exposure did not materially affect resistivity with either cure.

Dielectric constant values were essentially unchanged in vacuum or after vacuum exposure; slightly less increase was noted with increasing test temperature with the elevated temperature cured material.

Dissipation factors of Solithane 113 are virtually unchanged by vacuum but all values were almost three orders of magnitude larger than those measured with TUF-ON, i.e., 0.09 compared with 0.0001.

Dielectric strengths in vacuum were slightly reduced from one atmosphere values; in no event did values for Solithane equal those measured for TUF-ON, however.

3. Physical

Moisture absorption generally decreased with vacuum exposure of both cure cycles of Solithane. Solithane demonstrated about twice as much moisture absorption as TUF-ON at one atmosphere and after vacuum exposure. Values are still reasonably low, however.

F. Potting Compound, Stycast 1090 (Emerson and Cuming, Inc.) Cure 1. Catalyst No. 9 (9% by weight)-24 hours at room temperature

MECHANICAL PROPERTIES

Ultimate Tensile Strength ASTM D638 (psig)

	At 1 Atm	At 5×10^{-5} Torr	After 24 hours at 2×10^{-5} Torr
-40°F	2656 (2397-3383)	2900 (2619-3381)	1130 (882 - 1330)
+70°F	3703 (3388-3952)	2895 (2324-3195)	2192 (975 - 3652)
+300°F	217 (126 - 301)	102 (79 - 143)	333 (261 - 385)

Compressive Strength, ASTM D695 (psig)

-40°F	11,930 (11,330-12,670)	16,850 (16,190-17,930)	13,060 (12,530-13,930)
+70°F	10,675 (8600-11,739)	11,790 (11,460-11,980)	10,510 (9200-11,510)
+300°F	605 (430-708)	498 (417 - 611)	657 (490 - 799)

(Range of Values)

ELECTRICAL PROPERTIES

F. Potting Compound, Stycast 1090 (Emerson and Cuming, Inc.)
Cure 1. Catalyst No. 9 (9% by weight)-24 hours at Room Temperature

	At 1 Atm	At 1×10^{-5} Torr	At 1 Atm and 70°F after 24 hours at 70°F and 1×10^{-5} Torr
Volume Resistivity ASTM D257 (ohm/cm³)			
-40°F	6.3×10^{13} (6.0-6.5)	6.7×10^{13} (6.8-6.9)	5.8×10^{13} (5.6-5.9)
+70°F	4.9×10^{13} (4.9-5.1)	5×10^{13} (4.8-5.2)	5.1×10^{13} (5.0-5.2)
+300°F	2×10^{9} (1.9-2.1)	2.1×10^{9} (2.0-2.2)	4.5×10^{9} (4.3-4.6)
Surface Resistivity ASTM D257 (ohms)			
-40°F	9.3×10^{13} (9.1-9.5)	9.6×10^{13} (9.4-9.7)	8.0×10^{13} (7.8-8.2)
+70°F	7.9×10^{13} (7.7-5.1)	7.5×10^{13} (7.4-7.6)	7.2×10^{13} (7.0-7.3)
+300°F	6.1×10^{9} (6.0-6.2)	6.54×10^{9} (6.0-6.7)	7×10^{9} (6.9-7.31)
Insulation Resistance ASTM D257 (ohm/cm)			
-40°F	3.5×10^{13}	4.1×10^{13}	3.4×10^{13}
+70°F	3.0×10^{13}	3.0×10^{13}	3.0×10^{13}
+300°F	1.5×10^{9}	1.6×10^{9}	6.1×10^{9}

ELECTRICAL PROPERTIES

F. Potting Compound, Stycast 1090 (Emerson and Cuming, Inc.)
Cure 1. Catalyst No. 9 (9% by weight)-24 hours at Room Temperature

Temperature	At 1 Atm	At 1 x 10^{-5} Torr	At 1 Atm and 70°F after 24 hours at 70°F and 1 x 10^{-5} Torr
Capacitance at 60 cycles/second ASTM D150 (mmfd)			
-40°F	6.7 (6.4-6.9)	7.3 (6.8-8.3)	6.8 (6.6-7.2)
+70°F	7.9 (7.8-8.1)	8.2 (7.8-8.4)	7.8 (7.5-8.0)
+300°F	8.0 (7.8-8.2)	8.4 (8.0-8.7)	8.1 (7.9-8.4)
Capacitance at 10^6 cycles/second ASTM D150 (mmfd)			
-40°F	6.5 (6.3-6.7)	7.1 (6.9-7.4)	6.7 (6.5-6.8)
+70°F	7.5 (7.1-7.9)	7.6 (7.4-7.8)	7.6 (7.3-7.9)
+300°F	6.5 (6.4-6.7)	7.8 (7.5-8.0)	7.3 (7.0-7.5)
Dielectric Constant at 60 cycles/second ASTM D150			
-40°F	1.19 (1.14-1.23)	1.30 (1.22-1.46)	1.21 (1.17-1.28)
+70°F	1.40 (1.37-1.4)	1.45 (1.38-1.48)	1.39 (1.32-1.41)
+300°F	1.41 (1.38-1.45)	1.48 (1.41-1.53)	1.43 (1.40-1.48)

ELECTRICAL PROPERTIES

F. Potting Compound, Stycast 1090 (Emerson and Cuming, Inc.)
Cure 1. Catalyst No. 9 (9% by weight)-24 hours at Room Temperature

	At 1 Atm	At 1 x 10^{-5} Torr	At 1 Atm and 70°F after 24 hours at 70°F and 1 x 10^{-5} Torr
Dielectric Constant at 10^6 cycles/second ASTM D150			
-40°F	1.15 (1.12-1.19)	1.26 (1.22-1.30)	1.19 (1.15-1.22)
+70°F	1.33 (1.3-1.4)	1.34 (1.29-1.38)	1.34 (1.2-1.39)
+300°F	1.15 ((1.13-1.19)	1.38 (1.32-1.41)	1.29 (1.25-1.32)
Dissipation Factor at 60 cycles/second ASTM D150			
-40°F	0.013 (.013-.014)	0.013 (.012-.013)	0.012 (.012-.013)
+70°F	0.015 (.015-.016)	0.015 (.015-.016)	0.015 (.015)
+300°F	0.016 (.016-.017)	0.016 (.016)	0.016 (.016)
Dissipation Factor at 10^6 cycles/second ASTM D150			
-40°F	0.011 (.010-.012)	0.012 (.011-.013)	0.011 (.010-.011)
+70°F	0.015 (.014-.016)	0.015 (.014-.015)	0.015 (.014-.015)
+300°F	0.014 ((.014-.015)	0.014 (.014-.015)	0.016 (.015-.016)

F. Potting Compound, Stycast 1090 (Emerson and Cuming, Inc.)
Cure I. Catalyst No. 9 (9% by weight)-24 hours at Room Temperature

ELECTRICAL PROPERTIES

	At 1 Atm	At 1×10^{-5} Torr	At 1 Atm and 70°F after 24 hours at 70°F and 1×10^{-5} Torr
Dielectric Strength at 60 cycles/second ASTM D149 (0.046 in. thick) (volts/mil)			
-40°F	220	220	220
+70°F	200	260	205
+300°F	180	211	213

PHYSICAL PROPERTIES

F. Potting Compound, Stycast 1090 (Emerson and Cuming, Inc.)
Cure I. Catalyst No. 9 (9% by weight)-24 hours at Room Temperature

	At 1 Atm	At 1 x 10^{-5}	At 1 Atm and 70°F after 24 hours at 70°F and 1 x 10^{-5} Torr
Moisture Absorption ASTM D570 (% weight gain)			
At 70°F	2.3 (1.1-3.6)	Not taken	1.0 (.7-1.6)
At 165°F	3.2 (2.8-4.0)	Not taken	3.1 (2.1-4.4)
Thermal Expansion ASTM D696 (in/in/°F)			
			(Soaked at -40°F)
-40°F→70°F	1.6 x 10^{-5}	1.4 x 10^{-5} (1.3-1.5)	1.3 x 10^{-5} (1.1-1.4)
+70°F→+300°F	1.5 x 10^{15}	1.6 x 10^{-5}	1.6 x 10^{-5} (1.5-1.7)
			(Soaked at +70°F)
-40°F→+70°F			1.45 x 10^{-5} (1.3-1.6)
+70°F→+300°F			1.53 x 10^{-5} (1.5-1.6)
			(Soaked at +300°F)
-40°F→+70°F			1.5 x 10^{-5} (1.5-1.6)
+70°F→+300°F			1.72 x 10^{-5} (1.6-1.8)

PHYSICAL PROPERTIES

F. Potting Compound, Stycast 1090 (Emerson and Cuming, Inc.)
Cure 1. Catalyst No. 9 (9% by weight)-24 hours at Room Temperature

Thermal Conductivity ASTM C177 (Btu/in^2/°F/hr/in)	At 1 Atm	At 1 x 10^{-5}	At 1 Atm and 70°F after 24 hours at 70°F and 1 x 10^{-5} Torr
			(Soaked at 40°F)
-40°F→+70°F	5.98 x 10^{-3}	6.21 x 10^{-3}	5.94 x 10^{-3}
+70°F→+300°F	8.2 x 10^{-3}	7.85 x 10^{-3}	8.25 x 10^{-3} (8.2-8.25)
			(Soaked at 70°F)
-40°F→+70°F	-	-	6.23 x 10^{-3} (6.2-6.3)
+70°F→+300°F	-	-	7.6 x 10^{-3}
			(Soaked at +300°F)
-40°F→+70°F	-	-	6.2 x 10^{-3}
+70°F→+300°F	-	-	8.37 x 10^{-3}

G. Potting Compound, Stycast 1090 (Emerson and Cuming, Inc.)
Cure 2. Catalyst No. 11 (12% by weight)-2 hours at 212°F

MECHANICAL PROPERTIES

	At 1 Atm	At 1×10^{-5} Torr	At 1 Atm and 70°F after 24 hours at 70°F and 1×10^{-5} Torr
Tensile Strength ASTM D638 (psig)			
-40°F	2881 (2527-3257)	2640 (2248-3030)	2090 (1500-2680)
+70°F	3536 (3146-4017	3040 (2219-3680)	2391 (1046-3865)
+300°F	281 (239-338)	89 (64-128)	397 (293-465)
Compressive Strength, ASTM D695 (psig)			
-40°F	9190 (8040-11,060)	12,880 (12,200-13,410)	9460 (8300-10,240)
+70°F	9264 (1101-10,800)	10,710 (8810-13,090)	8700 (1420-9640)
+300°F	627 (460-787)	825 (730-953)	807 (607-885)

(Range of Values)

ELECTRICAL PROPERTIES

G. Potting Compound, Stycast 1090 (Emerson and Cuming, Inc.) Cure 2
Catalyst No. 11 (12% by weight)-2 hours at 212°F (cont'd.)

	At 1 Atm	At 1×10^{-5} Torr	At 1 Atm and 70°F after 24 hours at 70°F and 1×10^{-5} Torr
Volume Resistivity ASTM D257 (ohm/cm³)			
-40°F	6.9×10^{13} (6.4-6.9)	7.7×10^{13} (7.7)	4.3×10^{13} (4.1-4.7)
+70°F	4.2×10^{13} (3.8-4.5)	5×10^{13} (4.5-5.5)	4.8×10^{13} (4.6-5.0)
+300°F	5×10^{9} (4.5-6.5)	6×10^{9} (5.5-6.5)	4×10^{9} (3.9-4.1)
Surface Resistivity ASTM D257 (ohms)			
-40°F	2.1×10^{14} (2.1)	2.1×10^{14} (2.1-2.2)	1.9×10^{14} (1.81-1.9)
-70°F	1.6×10^{14} (1.6-1.65)	1.7×10^{14} (1.68-1.72)	1.6×10^{14} (1.55-1.65)
+300°F	2.5×10^{10} (2.44-2.57)	2.7×10^{10} (2.65-2.75)	1.6×10^{10} (1.55-1.64)
Insulation Resistance ASTM D257 (ohm/cm)			
-40°F	5.3×10^{13}	5.6×10^{13}	2.2×10^{13}
+70°F	3.3×10^{13}	3.9×10^{13}	3.7×10^{13}
+300°F	4.7×10^{9}	4.9×10^{9}	3.2×10^{9}

ELECTRICAL PROPERTIES

	At 1 Atm	At 1 x 10^{-5} Torr	At 1 Atm and 70°F after 24 hours at 70°F and 1 x 10^{-5} Torr
Capacitance at 60 cycles/second ASTM D150 (mmfd)			
-40°F	6.1 (5.4-6.9)	7.9 (7.0-9.8)	6.3 (5.9-6.8)
+70°F	8.0 (7.8-8.2)	8.4 (8.2-8.6)	7.9 (7.6-8.1)
+300°F	8.3 (7.6-8.5)	9.2 (8.7-9.4)	8.5 (8.3-8.8)
Capacitance at 10^6 cycles/second ASTM D150 (mmfd)			
-40°F	7.0 (6.9-7.2)	6.0 (5.8-6.3)	7.0 (6.4-7.5)
+70°F	7.0 (6.7-7.2)	7.3 (6.8-7.5)	7.2 (6.8-7.4)
+300°F	7.6 (7.3-7.9)	7.9 (8.3-7.6)	7.5 (7.0-8.0)
Dielectric Constant at 60 cycles/second ASTM D150			
-40°F	1.24 (1.22-1.28)	1.07 (1.04-1.12)	1.25 (1.13-1.33)
+70°F	1.40 (1.36-1.45)	1.47 (1.45-1.52)	1.40 (1.33-1.46)
+300°F	1.47 (1.35-1.50)	1.63 (1.53-1.67)	1.51 (1.46-1.56)

PHYSICAL PROPERTIES

G. Potting Compound, Stycast 1090 (Emerson and Cumming, Inc.) Cure 2
Catalyst No. 11 (12% by weight)-2 hours at 212°F (cont'd.)

	At 1 Atm	At 1 x 10^{-5} Torr	At 1 Atm and 70°F after 24 hours at 70°F and 1 x 10^{-5} Torr
Moisture Absorption (3 replications) ASTM D570 (% weight gain)			
At 70°F	1.75 (1.4-2.0)	Not taken	0.35 (.3-.4)
At 165°F	2.3 (1.1-3.6)	Not taken	1.7 (1.6-1.9)
Thermal Expansion (3 replications) ASTM D696 (in/in/°F)			
			(Soaked at -40°F)
-40°F→+70°F	0.23 x 10^{-5} (.2-.25)	1.4 x 10^{-5} (1.4-1.5)	1.0 x 10^{-5} (1.1-1.2)
+70°F→+300°F	1.65 x 10^{-5} (1.6-1.7)	2.6 x 10^{-5} (2.5-2.65)	2.1 x 10^{-5} (2.1-2.2)
			(Soaked at +70°F)
-40°F→+70°F			1.16 x 10^{-5} (1.1-1.3)
+70°F→+300°F			2.06 x 10^{-5} (1.7-2.4)
			(Soaked at +300°F)
-40°F→+70°F			1.13 x 10^{-5} (1.1-1.2)
+70°F→+300°F			1.33 x 10^{-5} (1.2-1.45)

PHYSICAL PROPERTIES

	At 1 Atm	At 1×10^{-5} Torr	At 1 Atm and 70°F after 24 hours at 70°F and 1×10^{-5} Torr
Thermal Conductivity (3 replications) ASTM C177 (Btu/in²/°F/hr/in)			
			(Soaked at -40°F)
-40°F→+70°F	7.5×10^{-3} (7.1 x 7.8)	5.24×10^{-3} (5.1-5.4)	5.22×10^{-3} (5.1-5.5)
+70°F→+300°F	8.6×10^{-3} (8.3-8.9)	8.12×10^{-3} (8.0-8.3)	6.74×10^{-3} (6.7-6.8)
			(Soaked at 70°F)
-40°F→+70°F	-	-	5.1×10^{-3} (5.0-5.5)
+70°F→+300°F	-	-	1.2×10^{-3} (1.0-1.4)
			(Soaked at +300°F)
-40°F→ 70°F	-	-	6.4×10^{-3}
+70°F→+300°F	-	-	8.27×10^{-3} (8.2-8.3)

I. Mechanical

One atmosphere tensile strengths of Stycast 1090 are not significantly dependent upon cure cycle although elevated cures produced slightly improved -40°F and +300°F performance. One atmosphere compressive strengths at -40°F and +70°F are measurably better with room temperature cured Stycast 1090 compared with elevated cures; conversely compressive strength is slightly higher at +300°F with elevated temperature cured material. However, only 5-10% of characteristic room temperature, one atmosphere, tensile and compressive strengths are maintained at 300°F with either cure.

In vacuum, characteristic one atmosphere tensile strength values generally were reduced from 10-60% at all temperatures for both cures with maximum reductions at +300°F and least at -40°F. Compressive strengths measured in vacuum generally increased 10-50% over one atmosphere values for both cures except for the anomalous result with the room temperature cured samples at +300°F where a 30% loss was sustained.

After 24 hour vacuum exposure, but measured at one atmosphere, 300°F tensile strengths were 30-40% higher than those for unexposed samples; 70°F tensiles were reduced by about 30%; and -40°F values declined 25 to 60%. Except for the strikingly lower values obtained with the room temperature cured specimens at -40°F, there is only a slightly better maintenance of tensile strengths in this environment with elevated temperature cured Stycast 1090.

Compressive strengths measured at 70°F and one atmosphere on specimens soaked for 24 hours in vacuum declined from values obtained with unexposed specimens, but increased over unexposed samples at -40°F and +300°F for both cures.

In summary, no clear cut relation between curing cycle and tensile and/or compressive strength was shown; tensiles generally dropped and compressives increased when measured in vacuum; but 24 hour exposure to vacuum, after which one atmosphere tests were made, generally resulted in somewhat better elevated temperature tensile strengths with both cures. Tensile strengths of Stycast 1090 in vacuum over the temperature range of -40°F to +300°F were reduced but not catastrophically; compressive strengths remained essentially unchanged or somewhat improved in vacuum.

2. Electrical

Resistivity (volume, surface, insulation) at one atmosphere is essentially independent of cure cycle for Stycast 1090 with only slightly better performance obtained with the elevated temperature cured material. Short time vacuum exposure does not appear to result in significant changes in resistivity of either Stycast 1090 cure.

Dielectric constant values obtained in vacuum and after vacuum exposure are relatively unchanged from one atmosphere results, with slightly greater increases noted at +300°F and 70°F in vacuum with elevated temperature compared to room temperature cured Stycast.

Dissipation factors showed no dramatic changes when measured in vacuum or after vacuum exposures.

Dielectric strength is significantly higher with elevated temperature cured Stycast 1090 independent of environment compared with room temperature cured material; however, with the latter, dielectric strength increased slightly in vacuum compared with one atmosphere values.

No catastrophic change in electrical properties due to vacuum exposure was observed; temperature degraded the electrical performance of Stycast 1090 (both cures) more noticeably than short-time vacuum exposures.

3. Physical

Moisture absorption of both room and elevated temperature cure Stycast 1090 was reduced from 50-75% by vacuum soaking. Absorption measured at +165°F was influenced less than at +70°F; elevated cures showed about 50% lower moisture absorption than room cured Stycast 1090 in each circumstance.

Thermal expansion of room cured Stycast 1090 in the range of -40°F to +70°F was generally reduced by vacuum exposure of the room cured specimens; however in the +70°F to +300°F range, slightly increased expansion rates were noted in vacuum and after vacuum exposure, with the maximum change occurring with specimens soaked in vacuum at +300°F. However, in the lower range, all expansion coefficients for all temperature and pressure environments fell between 1.3 and 1.6 x 10^{-5} in/in/°F for room cured Stycast 1090.

Elevated temperature cured material generally showed greater expansion after vacuum exposure and in vacuum than did the room cured Stycast 1090 over both temperature ranges. Yet, maximum changes due to vacuum were from 0.23 to 1.4 x 10^{-5} in/in/°F over -40°F to +70°F and from 1.65 to 2.6 x 10^{-5} in/in/°F over +70°F to +300°F for the 165°F cured specimens.

In summary, then, thermal expansion rates for both cures of Stycast 1090 are about the same under similar thermal and vacuum environments with vacuum exposure inducing somewhat greater changes with elevated cured material than with room temperature cured material.

Thermal conductivity between -40°F and +70°F of Stycast 1090, room temperature cured, is generally increased from 6 to 6.2 x 10^{-3} BTU/in^2/°F/hr/in by vacuum exposure, with no significant differences noted with specific soak temperatures at reduced pressures. Over the range of +70°F to +300°F, thermal conductivities were in the narrow range of 8.2 (one atmosphere) to 7.6 x 10^{-3} BTU/in^2/°F/hr/in (after vacuum soak) for room cured specimens. No definite effect of vacuum soak temperatures was noted.

The thermal conductivity of elevated cured Stycast 1090 is higher at one atmosphere than the room cured material, but is generally lower in vacuum and after vacuum exposure. Reductions induced by vacuum exposure are about twice those measured with the room cured Stycast in both temperature ranges. Yet, the maximum vacuum induced change noted with Stycast cured at 165°F was from 8.6 down to 1.2 x 10^{-3} BTU/in^2/°F/hr/in.

In summary, vacuum exposures reduce the thermal conductivity of room cured Stycast 1090 less than the elevated temperature cured specimens, but the gross change over the range of -40°F to +300°F ranges from about 8 to 1.2×10^{-3} BTU/in^2/°F/hr/in for all environments and both cures.

H. Foam Potting Compound, Eccofoam FP (Emerson and Cuming, Inc.) Catalyst No. 12-6 (11% by weight). Room Temperature cure
All specimens coated with one coat of Eccocoat 200 and air dried.

MECHANICAL PROPERTIES

	At 1 Atm	At 9×10^{-5} Torr	At 1 Atm and 70°F after 24 hours at 70°F and 1×10^{-5} Torr
Ultimate Tensile Strength ASTM D638 (psig) (5 replications)			
-40°F	181 (132-206)	43 (23-64)	79 (45-108)
+70°F	144 (117-161)	266 (76-389)	139 (125-159)
+165°F*	<1 (0-1)	<1 (0-1)	<1 (0-1)
Compressive Strength ASTM D695 (psig) (5 replications)			
-40°F	68 (64-77)	116 (100-137)	84 (77-93)
+70°F	56 (53-59)	81 (67-99)	58 (53-66)
+165°F*	<1 (0-1)	3 (2-4.5)	<1 (0-1)

*Foams would not withstand 300°F

ELECTRICAL PROPERTIES

H. Foam Potting Compound, Eccofoam FP (Emerson and Cuming, Inc.)
Catalyst No. 12-6 (11% by weight). Room Temperature cure
All specimens coated with one coat of Eccocoat 200 and air dried. (cont'd)

	At 1 Atm	At 1 x 10^{-5} Torr	At 1 Atm and 70°F after 24 hours at 70°F and 1 x 10^{-5} Torr
Volume Resistivity ASTM D257 (ohm/cm^3)			
-40°F	2.5 x 10^{13} (2.4-2.6)	2.8 x 10^{13} (2.7-2.8)	1.5 x 10^{13} (1.3-1.7
+70°F	2 x 10^{13} (1.9-2.2)	2.4 x 10^{13} (2.3-2.6)	1.9 x 10^{13} (1.8-2.2)
+165°F	1.2 x 10^{11} (1.1-1.3)	1.1 x 10^{11} (1.0-1.1)	1.9 x 10^{11} (1.7-2.2)
Surface Resistivity ASTM D257 (ohms)			
-40°F	3.6 x 10^{13} (3.4-3.8)	3.8 x 10^{13} (3.2-3.7)	3.1 x 10^{13} (3.0-3.2)
+70°F	3.x 10^{13} (2.8-3.2)	3.1 x 10^{13} (2.7-3.4)	2.9 x 10^{13} (2.6-3.2)
+165°F	2 x 10^{12} (1.9-2.1)	1.9 x 10^{12} (1.9-2.0)	2.7 x 10^{12} (2.5-2.9)
Insulation Resistance ASTM D257 (ohm/cm)			
-40°F	1.5 x 10^{13}	1.6 x 10^{13}	1.2 x 10^{13}
+70°F	1.2 x 10^{12}	1.4 x 10^{13}	1.2 x 10^{13}
+165°F	1 x 10^{11}	1 x 10^{11}	4.3 x 10^{11}

ELECTRICAL PROPERTIES

H. Foam Potting Compound, Eccofoam FP (Emerson and Cuming, Inc.)
Catalyst No. 12-6 (11% by weight). Room Temperature cure
All specimens coated with one coat of Eccocoat 200 and air dried.
(cont'd.)

	At 1 atm	At 1 x 10^{-5} Torr	At 1 Atm and 70°F after 24 hours at 70°F and 1 x 10^{-5} Torr
Capacitance at 60 cycles/second ASTM D150 (mmfd)			
-40°F	6.2 (6.1-6.3)	5.7 (5.3-6.3)	6.7 (6.4-6.9)
+70°F	6.4 (6.3-6.5)	7.1 (7.0-7.2)	6.4 (6.3-6.6)
+165°F	5.2 (5.1-5.3)	5.1 (5.0-5.4)	5.2 (5.1-5.4)
Capacitance at 10^6 cycles/second ASTM D150 (mmfd)			
-40°F	9.1 (9.0-9.2)	9.3 (9.0-9.7)	9.9 (9.7-10.1)
+70°F	9.0 (8.7-9.3)	10.1 (10.0-10.2)	9.2 (8.8-9.6)
+165°F	8.5 (8.4-8.6)	8.0 (8.0)	8.5 (8.2-8.7)
Dielectric Constant at 60 cycles/second ASTM D150			
-40°F	1.09 (1.08-1.12)	1.02 (0.94-1.15)	1.18 (1.13-1.28)
+70°F	1.14 (1.12-1.15)	1.27 (1.25-1.28)	1.15 (1.12-1.17)
+165°F	0.92 (0.09-0.94)	0.91 (0.88-0.96)	0.93 (0.90-0.96)

ELECTRICAL PROPERTIES

H. Foam Potting Compound, Eccofoam FP (Emerson and Cuming, Inc.)
Catalyst No. 12-6 (11% by weight). Room Temperature cure
All specimens coated with one coat of Eccocoat 200 and air dried
(cont'd.)

	At 1 Atm	At 9×10^{-5}	At 1 Atm and 70°F after 24 hours at 70°F and 1×10^{-5} Torr
Dielectric Constant at 10^6 cycles/second ASTM D150			
-40°F	1.61 (1.59-1.63)	3.23 (3.19-3.31)	1.75 (1.72-1.79)
+70°F	1.59 (1.52-1.65)	1.79 (1.78-1.82)	1.63 (1.54-1.70)
+165°F	1.5 (1.48-1.51	1.41 (1.41)	1.63 (1.54-1.70)
Dissipation Factor at 60 cycles/second ASTM D150			
-40°F	0.002 (.002-.003)	0.003 (.002-.004)	0.002 (.002-.003)
+70°F	0.005 (.004-.005)	0.005 (.005-.006)	0.006 (.005-.006)
+165°F	0.007 (.006-.007)	0.007 (.007)	0.007 (.007)
Dissipation Factor at 10^6 cycles/second ASTM D150			
-40°F	0.005 (.004-.006)	0.007 (.006-.009)	0.005 (.005-.006)
+70°F	0.005 (.004-.006)	0.005 (.004-.005)	0.005 (.005)
+165°F	0.006 (.006)	0.006 (.006)	0.006 (.006)

H. Foam Potting Compound, Eccofoam FP (Emerson and Cuming, Inc.)
Catalyst No. 12-6 (11% by weight). Room Temperature cure
All specimens coated with one coat of Eccocoat 200 and air dried.
(cont'd.)

ELECTRICAL PROPERTIES

	At 1 Atm	At 9 x 10^{-5} Torr	At 1 Atm and 70°F after 24 hours at 70°F and 1 x 10^{-5} Torr
Dielectric Strength at 60 cycles/second ASTM D149 (0.250 in. sample) (volts/mil)			
-40°F	67	65	65
+70°F	44	60	46
+165°F	42	40	41

PHYSICAL PROPERTIES

H. Foam Potting Compound, Eccofoam FP (Emerson and Cuming, Inc.)
Catalyst No. 12-6 (11% by weight). Temperature cure
All specimens coated with one coat of Eccocoat 200 and air dried.
(cont'd.)

	At 1 Atm	At 9×10^{-5} Torr	At 1 Atm and 70°F after 24 hours at 70°F and 1×10^{-5} Torr
Moisture Absorption ASTM D570 (% weight gain)			
At 70°F	84 (82-96)	Not taken	128 (117-147)
At 165°F	104 (91-113)	Not taken	700 (670-730)
Thermal Expansion ASTM D696 (in/in/°F)			
			(Soaked at -40°F)
-40°F→70°F	2.8×10^{-5} (2.75-2.85)	3×10^{-5} (2.9-3.1)	2.6×10^{-5} (2.6-2.65)
+70°F→+165°F	2.1×10^{-5} (2.1)	1.6×10^{-5} (1.6)	1.5×10^{-5} (1.45-1.52)
			(Soaked at +70°F)
-40°F→+70°F			1.82×10^{-5} (1.76-1.85)
+70°F→+165°F	-	-	1.63×10^{-5} (1.6-1.65)
			(Soaked at 165°F)
-40°F→+70°F	-	-	3.03×10^{-5} (3.0-3.1)
+70°F→+165°F	-	-	1.53×10^{-5} (1.4-1.7)

PHYSICAL PROPERTIES

H. Foam Potting Compound, Eccofoam FP (Emerson and Cuming, Inc.)

Catalyst No. 12-6 (11% by weight). Room Temperature cure
All specimens coated with one coat of Eccocoat 200 and air dried.
(cont'd.)

Thermal Conductivity ASTM C177 ($Btu/in^2/°F/hr/in$)	At 1 Atm	At 9×10^{-5} Torr	At 1 Atm and 70°F after 24 hours at 70°F and 1×10^{-5} Torr
			(Soaked at -40°F)
-40°F→+70°F*	1.2×10^{-3}	2.17×10^{-3} (2.0-2.1)	1.96×10^{-3} (1.9-2.1)
+70°F→+165°F*	4.1×10^{-3}	4.63×10^{-3} (4.5-4.7)	4.85×10^{-3} (4.6-5.0)
			(Soaked at +70°F)
-40°F→+70°F			1.99×10^{-3} (1.9-2.1)
+70°F→+165°F*			7.4×10^{-3} (7.2-7.6)
			(Soaked at +165°F)
-40°F→+70°F			1.36×10^{-3} (4.6-4.9)
+70°F→+165°F*			4.83×10^{-3} (4.6-4.9)

I. Foam Potting Compound, Eccofoam FPH (Emerson and Cuming, Inc.) Catalyst No. 12-6H (75% by weight). Room Temperature cure
All specimens coated with one coat of Eccocoat 200 and air dried.

MECHANICAL PROPERTIES

	At 1 Atm	At 1×10^{-5} Torr	At 1 Atm and 70°F after 24 hours at 70°F and 1×10^{-5} Torr
Untimate Tensile Strength (5 replications) ASTM D638 (psig)			
-40°F	304 (250-357)	114 (83-144)	193 (158-241)
+70°F	166 (141-200)	253 (183-205)	192 (177-205)
+165°F*	157 (136-170	85 (61-115)	123 (104-145)
Compressive Strength (5 replications) ASTM D695 (psig)			
-40°F	132 (103-155)	138 (130-148)	130 (100-158)
+70°F	113 (75-138)	124 (101-154)	122 (96-157)
+165°F*	77 (60-91)	89 (76-105)	74 (65-96)

*Foams would not withstand 300°F

ELECTRICAL PROPERTIES

I. Foam Potting Compound, Eccofoam FPH (Emerson and Cuming, Inc.)
Catalyst No. 12-6H (75% by weight). Room Temperature cure
All specimens coated with one coat of Eccocoat 200 and air dried.
(cont'd.)

	At 1 Atm	At 1×10^{-5} Torr	At 1 Atm and 70°F after 24 hours at 70°F and 1×10^{-5} Torr
Volume Resistivity ASTM D257 (ohm/cm³)			
-40°F	4.1×10^{14} (4.0 x 4.2)	6.2×10^{14} (6.2-6.3)	3.4×10^{14} (3.2-3.7)
+70°F	3×10^{14} (2.9 -3.2)	5.6×10^{14} (5.3-5.9)	2.8×10^{14} (2.5-3.0)
+300°F	8×10^{10} (7.7-8.3)	5.7×10^{9} (5.5-5.9)	4×10^{10} (3.8-4.3)
Surface Resistivity ASTM D257 (ohm/cm)			
-40°F	5.2×10^{14} (5.0-5.4)	5.2×10^{14} (5.0-5.4)	4.9×10^{14} (4.7-5.2)
+70°F	4.4×10^{14} (4.0-4.8)	4.5×10^{14} (4.3-4.7)	4.7×10^{14} (4.4-4.9)
+300°F	9×10^{10} (8.9-9.2)	1.6×10^{10} (1.6)	4.6×10^{10} (4.4-4.8)
Insulation Resistance ASTM D257 (ohm/cm)			
-40°F	2.32×10^{14}	2.92×10^{14}	2.18×10^{14}
+70°F	1.92×10^{14}	2.59×10^{14}	1.86×10^{14}
+300°F	4.3×10^{10}	4.4×10^{9}	1.9×10^{10}

ELECTRICAL PROPERTIES

I. Foam Potting Compound, Eccofoam FPH (Emerson and Cuming, Inc.) Catalyst No. 12-6H (75% by weight). Room Temperature cure All specimens coated with one coat of Eccocoat 200 and air dried. (cont'd.)

	At 1 Atm	At 1×10^{-5} Torr	At 1 Atm and 70°F after 24 hours at 70°F and 1×10^{-5} Torr
Capacitance at 60 cycles/second ASTM D150 (mmfd)			
-40°F	6.4 (6.1-6.9)	5.8 (5.7-5.9)	6.0 (5.3-6.7)
+70°F	7.6 (7.5-7.8)	7.5 (7.3-7.7)	7.5 (7.4-7.6)
+300°F	5.6 (5.5-5.7)	6.2 (6.0-6.4)	5.4 (5.3-5.5)
Capacitance at 10^6 cycles/second ASTM D150 (mmfd)			
-40°F	5.5 (5.2-5.9)	5.2 (5.0-5.3)	5.1 (4.6-5.7)
+70°F	5.9 (5.8-5.9)	5.6 (5.4-5.8)	7.1 (7.0-7.2)
+300°F	5.5 (5.1-5.7)	5.7 (5.5-5.9)	5.8 (5.6-6.0)
Dielectric Constant at 60 cycles/second ASTM D150			
-40°F	1.13 (1.08-1.23)	1.02 (1.01-1.05)	1.06 (.94-1.19)
+70°F	1.35 (1.32-1.38)	1.32 (1.29-1.37)	1.32 (1.3-1.35)
+300°F	0.98 (.97-1.01)	1.1 (1.07-1.14)	0.96 (.94-.97)

I. Foam Potting Compound, Eccofoam FPH (Emerson and Cuming, Inc.)
Catalyst No. 12-6H (75% by weight). Room Temperature cure
All specimens coated with one coat of Eccocoat 200 and air dried.
(cont'd.)

ELECTRICAL PROPERTIES

	At 1 Atm	At 1×10^{-5} Torr	At 1 Atm and 70°F after 24 hours at 70°F and 1×10^{-5} Torr
Dielectric Constant at 10^6 cycles/second ASTM D150			
-40°F	0.93 (0.91-0.95)	0.92 (0.89-0.97)	0.90 (0.81-1.01)
+70°F	1.05 (1.0-1.07)	1.0 (0.96-1.01)	1.26 (1.25-1.28)
+300°F	0.96 (0.9-1.01)	1.02 (.97-(1.05)	1.02 (.99-1.04)
Dissipation Factor at 60 cycles/second ASTM D150			
-40°F	0.001 (.001-.002)	0.001 (.001-.002)	0.002 (0.001-.002)
+70°F	0.002 (.002)	0.003 (.003)	0.003 (.003)
+300°F	0.001 (.001-.002)	0.001 (.001)	0.003 (.003)
Dissipation Factor at 10^6 cycles/second ASTM D150			
-40°F	0.002 (.002-.003)	0.002 (.001-.003)	0.002 (.001-.002)
+70°F	0.003 (.003)	0.002 (.002)	0.003 (.003)
+300°F	0.005 (.005)	0.003 (.002-.003)	0.003 (.003)

I. Foam Potting Compound, Eccofoam FPH (Emerson and Cuming, Inc.)
Catalyst No. 12-6H (75% by weight). Room Temperature cure
All specimens coated with one coat of Eccocoat 200 and air dried.
(cont'd.)

ELECTRICAL PROPERTIES

	At 1 Atm	At 1×10^{-5} Torr	At 1 Atm and 70°F after 24 hours at 70°F and 1×10^{-5} Torr
Dielectric Strength at 60 cycles/second ASTM D149 (0.125 in thick) (volts/mil)			
-40°F	65	67	63
+70°F	60	60	60
+300°F	48	50	54

PHYSICAL PROPERTIES

I. Foam Potting Compound, Eccofoam FPH (Emerson and Cuming, Inc.)
Catalyst No. 12-6H (75% by weight). Room Temperature cure
All specimens coated with one coat of Eccocoat 200 and air dried.
(cont'd.)

	At 1 Atm	At 1×10^{-5} Torr	At 1 Atm and 70°F after 24 hours at 70°F and 1×10^{-5} Torr
Moisture Absorption ASTM D570 (% weight gain)			
At 70°F	50 (43-55)	Not taken	59 (56-63)
At 165°F	57 (45-66)	Not taken	124 (115-134)
Thermal Expansion ASTM D696 (in/in/°F)			
			(Soaked at -40°F)
-40°F→70°F	2.1×10^{-5} (2.0-2.3)	1.96×10^{-5} (1.9-2.0)	2.17×10^{-5} (2.1-2.2)
+70°F→+165°F	0.84×10^{-5} (.8-.85)	5.3×10^{-5} (8.2-5.4)	7.55×10^{-5} (6.8-8.4)
			(Soaked at +70°F)
-40°F→+70°F			2.6×10^{-5} (2.5-2.8)
+70°F→+165°F			0.32×10^{-5} (.3-.35)
			(Soaked at +165°F)
-40°F→+70°F			1.93×10^{-5} (1.8-2.0)
+70°F→+165°F			6.5×10^{-5} (6.3-6.8)

PHYSICAL PROPERTIES

I. Foam Potting Compound, Eccofoam FPH (Emerson and Cuming, Inc.) Catalyst No. 12-6H (75% by weight). Room Temperature cure
All specimens coated with one coat of Eccocoat 200 and air dried.
(cont'd.)

Thermal Conductivity ASTM C177 (Btu/in^2/°F/hr/in)	At 1 Atm	At 1×10^{-5} Torr	At 1 Atm and 70°F after 24 hours at 70°F and 1×10^{-5} Torr
			(Soaked at -40°F)
-40°F→+70°F	1.2×10^{-3}	2.2×10^{-3}	2.4×10^{-3} (2.1-2.2)
+70°F→+165°F	5.4×10^{-3}	4.7×10^{-3}	4.9×10^{-3} (4.8-5.0)
			(Soaked at 70°F)
-40°F→+70°F			2.2×10^{-3} (2.0-2.4)
+70°F→+165°F			7.2×10^{-3} (7.2-7.25)
			(Soaked at +165°F)
-40°F→+70°F			1.6×10^{-3} (1.5-1.8)
+70°F→+165°F			4.5×10^{-3} (4.1-4.7)

1. General Comments

Early soak tests indicated that neither foam would be serviceable at 300°F; Eccofoam FP softening to the point of being spongy at that temperature, while FPH (the "high temperature" foam) remained rigid at 300°F, the foam could be readily deformed with finger pressure. After scouting mechanical tests were attempted at +300°F with values being obtained of less than 1 psig, subsequent elevated temperature mechanical tests were performed at 165°F with both FP and FPH foams. Electrical tests were made on FP at +165°F and on FPH at +300°F to ascertain no-load electrical performance at this extreme temperature.

Since the Eccocoat 200 sealant would not be expected to contribute significantly to mechanical or physical property results, only the electrical specimens were coated prior to testing.

2. Mechanical

a. FP Foam

At 70°F and one atmosphere, no significant reductions in already low tensile strengths or compressive strengths were noticed on FP foam samples which had been exposed to 10^{-5} Torr for 24 hours. Tensile and compressive strengths of FP foam measured at 10^{-5} Torr and 70°F were somewhat higher than those obtained at one atmosphere.

Almost complete losses in tensile and compressive strengths at 165°F were encountered with FP foam under all environmental conditions. Temperature extremes (-40°F and +165°F) generally exerted more damaging effects upon the characteristic strengths of FP foam than did the vacuum environments. As evidenced by the difficulty in attaining 10^{-5} Torr circumstances, the FP foam outgassing was noticeably greater than with the other samples utilized in the program.

b. FPH Foam

The effects of 24 hour exposure of FPH foam to 10^{-5} Torr environments at 70°F upon tensile and compressive strengths measured at one atmosphere were essentially insignificant except for a decrease in tensile at -40°F. As was noted with FP foam, 70°F tensile and compressive strength, showed some increases measured in the 10^{-5} Torr environment when compared to one atmosphere results.

At one atmosphere, FPH foam maintained about all of the characteristic 70°F strength at +165°F (this to be compared with FP which lost all strength). Room temperature tensile and compressive strengths increased when measured at 10^{-5} Torr, while 165°F tensile measurements dropped somewhat

and compressive strengths were essentially unchanged. Low temperature (-40°F) strengths generally decreased with vacuum exposure.

3. Electrical

Resistivity (volume, surface, insulation) values are slightly reduced in vacuum and after vacuum exposure from characteristic one atmosphere performance with FP foam. FPH (high temperature) foam, in some cases, showed improved resistivity in vacuum and after vacuum exposure. Net changes in either event, however, were slight.

Dielectric constant at 60 cycles generally increased slightly after vacuum exposure with FP, but decreased slightly with FPH foam. At 10^6 cycles, slight increases after vacuum exposure were noted with both FP and FPH foam.

Dissipation factors of FPH were generally lower than for FP foam, but neither were seriously influenced by vacuum exposure.

Dielectric strength measurements were about the same for each material measured in similar environments. Vacuum exposure did not appear to degrade one atmosphere values for either material; however, all values obtained were quite low but consistent with foams of this type.

4. Physical

a. FP Foam

Moisture absorption on all FP foam samples was much higher than manufacturer's literature indicated. (Method was not specified in this literature.) Vacuum exposure increased moisture absorption from twice to seven times that measured on unexposed FP samples.

Thermal expansion of FP foam from -40°F to +70°F did not change significantly when measured in vacuum or after vacuum soak of the samples. In the range of +70°F to +165°F, vacuum soaking appeared to have reduced expansion rates by about 40 percent, however, all measurements on all samples in all environments fell into a rather narrow range of 1.45 to 3.1 x 10^{-5} in/in/°F.

Soaking in vacuum at -40°F and at +165°F did not materially change the results obtained with samples soaked at 70°F.

Thermal conductivity values for FP foam were generally increased by vacuum exposure in both temperature ranges, although all the values were within 1.2 (for one atmosphere) to 2.2 (for 10^{-5} Torr) for the low temperature range and 4.1 to 7.4 for the high temperature range. (All values X 10^{-3} BTU/in^2/°F/hr/in.)

b. FPH Foam

Moisture absorption of FPH foam was much higher than the manufacturer's literature indicated. Vacuum exposure increased moisture absorption from about 20% to over 100% that measured on unexposed FPH specimens.

Thermal expansion of FPH foam from -40°F to +70°F was not materially changed when measured in vacuum or after 24 hour vacuum soak of the specimens. In the range of +70°F to +165°F, however, vacuum exposure increased expansion rates by about an order of magnitude, i.e., from 0.8 x 10^{-5} in/in/°F to 5-8 x 10^{-5} in/in/°F. Reproducibility of the values obtained with three replications in each environmental circumstance is considered to be good. Vacuum soaking at various temperatures did not significantly influence results characteristic of the vacuum exposure.

Thermal conductivity values for FPH foam were generally increased by vacuum exposure in both temperatures, but to a lesser extent than measured with FP foam. In the -40°F to +70°F range, values changed from 1.2 at one atmosphere to 2.2 at 10^{-5} Torr in the +70°F to +165°F range, values changed from 5.4 to 7.2 after vacuum soak. (All values X 10^{-3} BTU/in^2/°F/hr/in.)

In summary the thermal conductivities of both Eccofoam FP and FPH over the temperature range of -40°F to +165°F are somewhat increased in vacuum and after vacuum exposure, but the net change is less than doubled and not as great as an order of magnitude.

IV. CONCLUSIONS

No catastrophic losses in mechanical, electrical or physical properties due to short-time (24 hour) vacuum exposures alone were recorded with any of the materials tested. Elevated temperatures in the 300°F range degraded most properties more severely than vacuum exposure; as anticipated most severe losses occurred with the combination of reduced pressures and elevated temperatures. The general conclusion is reached that except in those few circumstances where component design requires that maximum performance be retained with these materials, short-time vacuum exposure should not seriously impair their performance. In general those materials subjected to reduced pressures for short-times (24 hours), after which tests were performed at one atmosphere, did not yield data of more value than the measurements in vacuum. Certain specific conclusions are now presented.

1. Eccobond 55, without optimum surface preparation, is a better adhesive for epoxy-glass to epoxy-glass laminates than for metal to metal bonding. At +300°F, the adhesive is not considered satisfactory at one atmosphere or in vacuum where any strength requirement is imposed upon the bonded assembly.

2. TUF-ON 747S, without optimum surface preparation, does not have adequate adhesion to metal or epoxy-glass laminates as measured by the "wet tape" test. Dissipation factors of the coating are a few orders of magnitude better than for Solithane. Elevated temperature cures of TUF-ON do not generally improve performance over room temperature cured coating. Short-time vacuum exposures do not materially affect electrical properties of TUF-ON.

3. Solithane 113 (75% Catalyst 300) shows adequate adhesion only to epoxy-glass laminates but not to aluminum as measured by the "wet tape" test with room and elevated temperature cured material. Electrical properties were not seriously changed by vacuum exposure.

4. Stycast 1090 retains only 5-10% of ambient temperature physicals at +300°F both at one atmosphere and at reduced pressures. Compressive strengths in vacuum are improved over one atmosphere values. Pore-free castings of Stycast 1090 are not easily obtainable by the inexperienced user.

5. Eccofoam FP and FPH do not retain physicals at +300°F contrary to manufacturers' literature; Eccofoam FP does not retain any physicals at +165°F. Moisture absorption by ASTM D570 (24 hour immersion) of both foams is significantly higher than reported values.

V. RECOMMENDATIONS

1. For the purpose of understanding the behavior of a given polymeric class in reduced pressure environments, more extensive series of tests should be performed with single materials relating time of exposure (much longer than 24 hours) to rate of property change.

2. While easily obtained, moisture absorption and wet tape adhesion tests appear to have little meaning in evaluation of polymeric materials for applications at reduced pressures.

3. Short-time reduced pressure tests at -40°F do not appear to contribute much more to the evaluation of materials for space applications than simpler -40°F tests without reduced pressure.

4. The effects of the superimposition of ultraviolet radiation, high temperature and reduced pressures for extended periods upon candidate non-metallic materials are recommended for follow-on study.