NASA CR 51520

Interim Report | *February 19, 1962 to February 18, 1963*

code 1

INVESTIGATION OF THE SPACE STORABILITY OF PRESSURIZING GASES

Prepared for:

NATIONAL AERONAUTICS AND SPACE ADMINISTRATION
WESTERN OPERATIONS OFFICE
SANTA MONICA, CALIFORNIA

NASA CONTRACT NO. NAS7-105

STANFORD RESEARCH INSTITUTE

MENLO PARK, CALIFORNIA

*SRI

OTS PRICE

XEROX $ [redacted] ph

MICROFILM $ [redacted]

CASE FILE COPY

SRI

August 1963

Interim Report | *February 19, 1962 to February 18, 1963*

INVESTIGATION OF THE SPACE STORABILITY OF PRESSURIZING GASES

Prepared for:

NATIONAL AERONAUTICS AND SPACE ADMINISTRATION
WESTERN OPERATIONS OFFICE
SANTA MONICA, CALIFORNIA

NASA CONTRACT NO. NAS7-105

By: *A. P. Brady* *J. L. Brenner* *F. M. Church*
E. C. Follett *R. F. Muraca* *J. S. Whittick*

SRI Project No. PSU-4000

Approved:

R. F. Muraca

R. F. MURACA, ASSISTANT GENERAL MANAGER
PHYSICAL SCIENCE RESEARCH

Copy No. 14

CONTENTS

LIST OF ILLUSTRATIONS vii

LIST OF TABLES ix

FOREWORD xi

ABSTRACT xiii

I INTRODUCTION I-1

II HANDBOOK FOR THE DESIGN OF PRESSURIZED GAS SYSTEMS II-1

Introduction II-1

Format II-1

Content II-1

III PERMEABILITY OF SOLIDS TO GASES III-1

Introduction III-1

Polymeric Materials III-1

Glasses III-9

Metals III-9

Laminates III-11

Distinction between Permeation and Gas Flow III-13

References III-17

IV PERMEABILITY OF MATERIALS TO GASES: EXPERIMENTAL DETERMINATIONS IV-1

Introduction IV-1

Apparatus IV-2

Procedure IV-3

Determinations IV-7

Discussion of Mass Spectrometric Determinations IV-9

References IV-19

CONTENTS

V EXAMINATION OF PRESSURIZED GAS VESSELS V-1

Introduction V-1

Apparatus V-2

Pressure Vessels V-3

Procedure and Results V-4

VI EXPANSION OF PRESSURIZING GASES VI-1

Introduction VI-1

Perfect Gas VI-1

Van der Waals Gas VI-2

Some Numbers VI-3

VII ALTERNATIVE METHODS OF GAS STORAGE VII-1

Introduction VII-1

Clathrates VII-1

Helides. VII-2

Hydrides VII-2

Summary VII-3

References VII-4

VIII RELIABILITY VIII-1

Introduction VIII-1

Reliability Mathematics VIII-3

Tolerance Limits for Finite Number of Samples . . . VIII-6

References VIII-11

CONTENTS

IX ATTITUDE CONTROL IX-1

Introduction IX-1

The Object of Attitude Control in a Satellite, Probe, or Rocket. IX-1

The Perturbing Influences IX-2

Devices for Sensing Attitude IX-5

Required Tolerances in Attitude IX-6

Systems and Components for Use in Attitude Control . . IX-7

The Components of an Attitude Control System IX-9

Motion of a Rigid Body in Space IX-15

The Attitude of a Rigid Body in Inertial Space IX-23

Stability and Control Theory IX-32

References IX-39

APPENDIX A-1

Bibliography A-2

Distribution List B-1

ILLUSTRATIONS

Fig. IV-1	Permeability Cell, Valve, and Auxiliary System Leading to the Analyzer Tube of the Mass Spectrometer	IV-4
Fig. IV-2	View of Gas-Handling System, Control Unit, and Permeability Cell	IV-5
Fig. IV-3	Rate of Permeation of Nitrogen through Teflon FEP-Aluminum	IV-11
Fig. IV-4	Permeation of Nitrogen through Teflon FEP	IV-12
Fig. IV-5	Permeability Cell for Mass Spectrometer	IV-15
Fig. IV-6	Support Plate, Compression Plug, and Cap for Permeability Cell	IV-16
Fig. IV-7	Top Plate of Permeability Cell	IV-17
Fig. IV-8	Base of Permeability Cell	IV-18
Fig. V-1	Large Vacuum Apparatus Used for Testing Leakage of Pressure Vessels	V-2
Fig. IX-1	Block Diagram of an Attitude Control System	IX-9
Fig. IX-2	Cold Gas System Hardware Implementation	IX-10
Fig. IX-3	Attitude Control System Similar to that Used for SCOUT	IX-11
Fig. IX-4	Typical Attitude Control System Using Hydrazine . .	IX-12
Fig. IX-5	Attitude Control System Using Solid Propellant . .	IX-13
Fig. IX-6	Programmed Band of Tolerable Values of θ, Plotted Around a Solution Curve of Equation (4) . .	IX-20

FOREWORD

This report summarizes the work accomplished by Stanford Research Institute during the period February 1962 to February 1963 on Contract NAS7-105 for the National Aeronautics and Space Administration under the administration of the NASA's Western Operations Office.

Mr. Frank E. Compitello of NASA/Washington was Project Manager, and Mr. Richard N. Porter of the Jet Propulsion Laboratory was Technical Manager of the program.

The technical effort at Stanford Research Institute was directed by Dr. R. F. Muraca, Assistant General Manager of Physical Sciences Research.

Grateful acknowledgement is given for assistance on this program to the Aerojet-General Corporation, Azusa, the Bell Aerosystems Company, the Jet Propulsion Laboratory, the National Aeronautics and Space Administration, and the Space Technology Laboratories.

TABLES

Table	III-1	Permeability of Three Polyethylenes at 25°C . .	III-6
Table	III-2	Permeability of Plasticized and Unplasticized Polychlorotrifluoroethylene	III-6
Table	IV-1	Permeability of Polyethylene to Various Gases at 29°C	IV-7
Table	IV-2	Permeability of Some Polymeric Materials to Nitrogen	IV-9
Table	IV-3	Permeability of Teflons to Nitrogen Tetroxide .	IV-10
Table	VII-1	Relative Weights of the Various Systems When Used as Pressurized Gas Storage Devices for Attitude Control	VII-3
Table	VIII-1	Tolerance Factors for Normal Distribution . . .	VIII-9
Table	IX-1	Errors in Attitude for an Earth Surveillance Satellite Rotating at Constant Angular Velocity About its Axis	IX-3
Table	IX-2	The Chief Persistent Disturbances	IX-4
Table	IX-3	Attitude Sensors	IX-5
Table	IX-4	Allowable Tolerance in Attitude for Various Satellites, Missions, and Functions	IX-6
Table	IX-5	Attitude Control Systems in Use	IX-7
Table	IX-6	Attitude Control Systems Proposed	IX-8
Table	IX-7	Time Delays in Gas Attitude Control Systems . .	IX-14

ABSTRACT

22158

The interim report discusses the various aspects which have been considered for the space storability of pressurizing gases, and the design handbook, "Handbook for the Design of Pressurized Gas Systems," presents necessary fundamental theories and equations, as well as tabulated and graphically presented data, which are useful to design engineers.

The areas which have been studied in this program are: the space environment, attitude control, zero gravity, heat balance, permeability, pressure vessels, pressurizing systems and components, properties of gases, properties of materials, and evaluations for storage efficiency and reliability.

I INTRODUCTION

The objectives of this program of research are: (1) to investigate the methods and construction features for efficient storage of pressurizing gases for long periods in space; (2) to develop a design handbook which incorporates the findings of the study. The work which has been done up to this time in fulfilling these objectives is described in this report.

The initial effort for this work was involved with the accumulation of pertinent literature, which covers a wide range of topics, for study, evaluation, and reference; the accumulated literature has been divided into broad categories of subject matter and is presented as an annotated bibliography which appears in the Appendix to this report.

A selection was made of the most suitable candidate gases for use in pressurized systems. Discussions from various points of view of the use of these gases are found throughout this report, and extensive data on the gases will be incorporated in the Handbook. Various properties of container (and associated) materials will be found in the Handbook.

The problems of leakage and permeability of gases have been studied thoroughly during this program. The results of this study are summarized in this report, and the theory of permeability, parametric expressions and tabulated data on permeability will be given in the Handbook. The experimental work done on mass spectrometric determination of the permeability of materials to gases is described in this report.

Since the bonding factors of this program have been storage efficiency and reliability, one form of discussion can be given in this report and elaborated in the Handbook; however, direct application of the theories will be found in this report, or in the Handbook as appropriate, under such topics as attitude control, pressure vessels, pressurizing systems, zero-g, heat balance, etc.

The results of evaluation and study of the background material accumulated during this program will be embodied in the "Handbook for the Design of Pressurized Gas Systems" which will be issued at a later date. A brief discussion of the purpose and content of the Handbook is given in Section II of this report.

II HANDBOOK FOR THE DESIGN OF PRESSURIZED GAS SYSTEMS

Introduction

The purpose of the Handbook is to present necessary theory and fundamental data in a form usable to the design engineer working with pressurized gas systems; it is intended that the Handbook be a complete and independent guide.

Format

The textual material in the Handbook is contained in a loose-leaf binder, and is arranged so that new or revised information may be added from time to time without disturbing other sections or pagination.

The material in the Handbook is arranged into fifteen sections which are separated by dividers. A Table of Contents lists the major topics of the fifteen sections; each section is provided with a complete Table of Contents, including tables and figures.

The general arrangement of material in each section is somewhat the same: discussion, tables, figures, references. Where the several aspects of the discussion (e.g., "Space Environment") or the quantity of information (e.g., "Properties of Gases") warrant further division, the section is divided into parts, each following the pattern: discussion, tables, figures (as in the section on environment), or simply tables and figures (as in the section on gases).

Content

The sections in the Handbook are: The Space Environment; Attitude Control Theory; Nozzle Performance; Storage Efficiency; Zero-G Considerations; Heat Balance; Permeability Theory; Properties of Gases; Theory of Vessel Design; Actual Pressure Vessels; Reliability; Valves; Rings and Seals; Materials.

The section on "Space Environment" summarizes the conditions affecting the design of systems for the storage of gases in spacecraft.

The section on "Attitude Control Theory" consists of a very brief presentation of computational methods and fundamental theory necessary to the design of pressurized gas attitude-control systems; the "Nozzle Performance" section summarizes formulas for calculating the performance of cold gas nozzles.

The section on "Storage Efficiency" considers the theoretical aspects of storage of pressurized gases from the point of view of density, weight, performance, reliability, etc.

The behavior of pressurized gases in essentially zero-g conditions is summarized under "Zero-Gravity Considerations," and the section on "Heat Balance" presents theoretical considerations and computational methods for determining the heat balance in pressurized gas vessels and associated components.

The "Permeability Theory" section is concerned with the fundamental aspects of diffusion and permeability of pressurized gases as applied to metals, polymers, glasses, etc.

The section on "Properties of Gases" consists of an extensive tabular and graphic compilation of physical and thermodynamic properties of the gases likely to be used in pressurized gas systems.

The section on the "Theory of Pressure Vessel Design" is involved with computational methods and design data for fail-safe pressure vessels; the section on "Actual Pressure Vessels" at the present time is indexed as an indication for future entries on the design, reliability, and performance of actual pressure vessels used in spacecraft.

The section on "Reliability" reviews and summarizes the statistical relationships which are used to formulate the over-all reliability of a pressurized gas system.

The section on "Valves" will give some consideration to practical data on reliability, leak rates, etc; it will be completed at a later time.

The section on "Rings and Seals" covers the methods for joining components in pressurized gas systems through use of intermediate materials, and considers the suitability of materials for use in the space environment.

The section on "Materials" presents data on the properties of metals currently used in pressurized gas systems, the compatibility of selected materials with gases and fluids, and the permeability of materials to gases.

III PERMEABILITY OF SOLIDS TO GASES

Introduction

The transmission of a gas or a vapor through a polymeric or metallic film is, in the absence of flaws such as cracks, pinholes and the like, a process of activated diffusion. The gas must first adsorb on the surface of the film, then dissolve in the material, diffuse through the bulk, and desorb on the low pressure side. These steps always occur when gases or vapors diffuse through any material, but the relative importance of the various steps and the rate-controlling processes are sufficiently different to make it convenient to discuss each type of material separately. Accordingly, permeation through organic polymers, through inorganic glasses, and through metals will be discussed in this order. This will be followed by a brief discussion of laminates (including a metal foil, which may have pinholes, deposited on a polymer) and finally consideration of simultaneous permeation and mass flow. Specific permeation data will not be given in this section, except as needed for illustrative purposes.

Polymeric Materials

With permanent gases, such as He, H_2, O_2, N_2, CO_2, the solubility in the polymer is sufficiently low so that the gases are diffusing through essentially unchanged polymer. Under these circumstances, in the steady state the amount transmitted per unit time per unit area, J, is given by

$$J = - D \frac{dc}{dx} \tag{1}$$

where D is the diffusion constant and dc/dx is the concentration gradient within the polymer film. Because of the small solubility,

Henry's law holds and thus $c = Sp$, where S is the solubility coefficient and p is the pressure of the gas. Substituting in (1),

$$J = - DS \frac{dp}{dx} \tag{2}$$

The product DS is the permeability constant, P. Since in the steady state J is independent of x, equation (2) can be integrated to give

$$P = \frac{- Jd}{\Delta p} \tag{3}$$

where d is the thickness of the film.

The usual method of measuring the permeability of a polymeric film is to establish a known pressure of the gas or vapor on one side of the film and to observe the transmission of the gas or vapor by the pressure increase on the other side. The low pressure side is generally at high vacuum, so that the pressure drop across the film is substantially constant during the course of the experiment. The method has the advantage of simple mathematical analysis but can be very slow under some circumstances. The method used by Stanford Research Institute (see Section IV) measures the rate of permeation (as opposed to the total amount permeated) by means of a mass spectrometer, and allows the simultaneous determination of two or more species in a mixture.

Both methods are amenable to the analysis of the transient state to separate the diffusion and solubility coefficient parts of the permeability coefficient. One means of analysis of the transient state can be termed the "late" approximation and the other the "early" approximation. The mass spectrometer method is particularly suitable for the latter, and in certain circumstances this can, in addition to separating diffusion and solubility, considerably shorten the time of the experiment.

Both means of analyzing the transient state start with Fick's second law and the assumption that the diffusion constant is independent of concentration which, in the one dimensional case, gives

$$\frac{dc}{dt} = D \frac{d^2c}{dx^2} \tag{4}$$

where t is the time. The late approximation was introduced by Daynes[7], and developed by Barrer[3]. Solution of equation (4) by a Fourier series in the coordinates and an exponential in the time with the boundary conditions $c = c_o$ at $x = 0$ for all t, $c = 0$ for $0 < x < d$ for $t = 0$, and $c = 0$ at $x = 1$ for all t, leads to

$$Q = \frac{AD}{d} c_o \left\{ t - \frac{d^2}{6D} - \frac{2d^2}{\pi^2 D} \sum_{m=1}^{\infty} (-1)^m \frac{\exp(-m^2\pi^2 Dt/d^2)}{m^2} \right\} \tag{5}$$

where A is the area of the film and Q is the quantity transported across the film in time t. At sufficiently long times equation (5) reduces to

$$Q = \frac{ADc_o}{d} (t - \tau) \tag{6}$$

Thus Q becomes linear in t with a slope $\frac{APp_o}{d}$ (since $c_o = Sp_o$, where p_o is the upstream pressure) and an intercept on the time axis τ and

$$D = \frac{d^2}{6\tau} \tag{7}$$

Hence, by this method, one can obtain both P and D and, consequently, S. An independent check is to measure the solubility directly. Excellent agreement has been reported for a number of elastomer-gas systems by van Amerongen.[33]

The "early" approximation was used by Rogers, Buitz and Alport.[24] By a transformation a solution of equation (4) is

$$J = 2\ Sp_1(D/\pi t)^{1/2} \sum_{m=1}^{\infty} \exp\left[-(d^2/4Dt)(2m+1)^2\right] \tag{8}$$

At times sufficiently <u>short</u> only the leading term in the series is important. Multiplying both sides of (8) by $t^{1/2}$ and taking natural logarithms leads to

$$\ell n\ (Jt^{1/2}) = \ell n[(2Sp_1)(D/\pi)^{1/2}] - d^2/4Dt \tag{9}$$

Thus plotting the left hand number against t^{-1} should give a straight line of slope $- d^2/4Dt$. Having determined D, the value of S is given by

$$S = \left(\frac{\pi}{D}\right)^{1/2} \left(\frac{Jt^{1/2}}{2\ p_1}\right) \exp\ (d^2/4Dt) \tag{10}$$

and, since $P = DS$, this quantity is also determined.

From the early approximation all the quantities of interest can be derived. It is especially useful in the mass spectrometer method because rates are required, which are determined directly. The late approximation requires an integration. Rogers <u>et al</u>. actually used the pressure rise method in their application of the early approximation which, of course, required a differentiation and its accompanying errors.

At $t = 2.7\tau$ both the early and the late approximation are in error by 1.2 percent, so this can be considered a rough dividing line for the region of validity of the two methods.

Both D and S obey the Arrhenius relations:

$$S = S_0 e^{-\Delta H/RT}$$

$$D = D_0 e^{-Ep/RT}$$

where ΔH is the heat of solution of the gas in the polymer and E_d is the activation energy of diffusion within the polymer. Consequently,

$$P = P_o e^{-E_p/RT}$$

where $E_p = \Delta H + E_d$. In all cases E_d is positive (rate of diffusion increases with increasing temperature). The quantity ΔH is small and positive for the permanent gases, but may be negative and large in the case of easily condensable gases owing to the contribution of the heat of condensation[75]. As a result, a plot of the logarithm of the permeability vs. the reciprocal of the absolute temperature gives very nearly a straight line in the case of the permanent gases (increase in permeability with increasing temperature), but with easily condensable gases (e.g. water through Nylon 6-6 or polyvinyl alcohol[19], methyl bromide through polyethylene[26]) when the temperature is decreased the permeability may first decrease, pass through a minimum, and actually increase at still lower temperatures.

A knowledge of the chemical nature of the polymeric film is not sufficient to define its permeability -- one important factor is crystallinity. In Table III-1 are given the permeability of some polyethylene films of different crystallinities (as determined by density) for selected gases. Fairly good correlation can be obtained by assuming that the gases are soluble only in the amorphous portion of the polyethylene; similar results have been reported for permeation of water vapor through polyethyleneterephthalate[14]. Table III-2 illustrates another effect, that caused by plasticizer. Chemical analysis of the two polymers would be nearly identical, but it can be seen that the presence of low molecular weight material enormously increases the permeability. This effect, in contrast to the effect of crystallinity, is largely due to an increase in the diffusion constant. Polyethyleneterephthalate shows in addition crystallinity effects such as those illustrated for polyethylene.

It would be desirable to be able to predict the permeability of an arbitrary gas-polymer system through basic principles or an empirical

Table III-1

PERMEABILITY OF THREE POLYETHYLENES AT 25°C (Ref. 17)
α = vol. fraction amorphous

Gas	Permeability [cc (STP)/cm-sec-atm] x 10^7		
	Grex (α = 0.23)	Alathon 14 (α = 0.57)	Hydropol (α = 0.71)
He	0.087	0.375	1.20
O_2	0.0308	0.220	0.86
A	0.129	0.208	0.84
CO_2	0.0275	0.113	0.47
N_2	0.0109	0.074	0.304

Table III-2

PERMEABILITY OF PLASTICIZED AND UNPLASTICIZED
POLYCHLOROTRIFLUOROETHYLENE (Ref. 20)

Gas	Temp., °C	Permeability [cc(STP)/cm-sec-atm] x 10^8	
		Unplasticized	Plasticized[a]
N_2	50	0.014	0.42
	75	0.065	1.95
O_2	0	0.003	0.083
	30	0.040	0.42
	60	0.22	2.13
CO_2	50	0.27	5.70

a. Plasticized with low molecular weight polycholorotrifluoroethylene.

correlation requiring very few measurements. Unfortunately, no method of general applicability has been found. The solubility portion can, in a given polymer, be correlated fairly well with the normal boiling point of

the gas[25], its critical temperature[33], or its Lennard-Jones force constant[16]. Correlations of diffusion constants have not been nearly so successful. Michaels and Brixter[17] have had some success in correlating diffusion in polyethylene with a geometric impedance factor, a chain immobilization factor, and a "reduced diameter" (involving the mean unoccupied distance between two chain segments). However, use of this correlation requires a great deal of knowledge about the polymer and its extension to other polymers has not yet been made. Salame[29] has published a correlation of the permeability of various organic materials through polyethylene by use of a "permachore." Although useful for related polymers such as polypropylene, he specifically states that the method cannot be applied to polymers such as Nylon, Delrin, and other nitrogen or oxygen containing polymers.

The simplest correlation suggested is that of Rogers et al.[25], who noted that the ratio of the permeabilities of some of the fixed gases is roughly independent of the nature of the polymer. Hence they suggested a "G value" for the following gases (at 30°C): N_2 = 1.0 (arbitrary), O_2 = 3.8, H_2S = 21.9, CO_2 = 24.2. This may serve as a guide in many cases, but it fails badly in other cases. Thus from Table III-1 it can be seen that the ratio of the permeability of O_2 to that of N_2 is indeed approximately 3, but CO_2 is only about twice as permeable as N_2. In the case of polytrichloroethylene (Table III-2), on the other hand, the CO_2/N_2 ratio is 13-19.

The above discussion has been confined to the permeability of permanent gases, except for brief mention of temperature effects with easily condensable vapors. If the vapor is appreciably soluble in the polymer, the situation can become quite complicated, since in general Henry's Law will not be obeyed; this plus the plasticizing effect of the permeant will cause a strong dependence of the permeability constant on the vapor pressure of the permeant and the more or less unpredictable temperature effects already mentioned. Under these circumstances, the polymeric material is generally not suitable for space applications. In some cases, however, the possibility of such behavior must be expected, as in the following example.

According to a Bell Aerosystems report[13] MON (and hence presumably N_2O_4) comes to equilibrium across a 7-mil Teflon sheet in a few days. For a long mission with a re-start, it might be desirable to know the permeability with a relatively low pressure differential and near saturation on both sides.

In the mass spectrometric method for measuring permeabilities, the pressure on one side is set at p_0 and on the other at essentially zero. By definition, the overall permeability $\overline{P}$, the thickness t, the flux J, and p_0 are related by:

$$J = \overline{P}p_0/t \tag{11}$$

One can equally well define a differential permeability by $(0 < x < t)$:

$$J = Pdp/dx \tag{12}$$

Equating (11) and (12) and integrating from $x = 0$, $p = 0$ to $x = t$, $p = p_0$ gives a relation analogous to a well-known case for integral and differential diffusion coefficients:

$$\overline{P} = \frac{1}{p_0} \int_0^{p_0} pdp \tag{13}$$

Differentiating (13) with respect to p_0 gives the relation sought:

$$P = \overline{P} + d\overline{P}/d\ln p_0 \tag{14}$$

For most "permanent" gases through most films, $\overline{P}$ is independent of p_0 and equation (14) is trivial. Where swelling occurs, however, P and $\overline{P}$ may differ appreciably. For water through Nylon 6-6 at 25°C, P(sat.) = $7.5\overline{P}$(sat), calculated from data of Myers et al.[18] and for methyl bromide through polyethylene at -15°C, P(sat.) $\approx$ $7.8\overline{P}$(sat.), calculated from the data of Myer et al.[15].

Glasses

The permeability of fused silica and certain glasses to helium is well known and can be troublesome under certain circumstances. Vacuum Dewars of some types of glass, for example, can be used to store liquid helium only for a day or two since they will lose their vacuum through helium permeation. Hydrogen, deuterium, and neon will also permeate fused silica, but the permeabilities of molecules larger than these (a dividing line of about 2.5 Å diameter) are enormously less[21].

The permeabilities of the small gas molecules through glass follow an Arrhenius law as in the case of polymeric films just discussed, $P = P_0 e^{-Ep/RT}$. The glass composition plays a dominant role. The rate of permeation decreases as the content of glass formers, $SiO_2 + B_2O_3 + P_2O_5$ decreases; when this sum drops to 20-30 percent, the helium permeation rate is cut down, compared to silica glass, by a factor of a million[21]. This effect is attributed to alkali and alkaline earth oxides blocking the passages in the relatively open network of the glass-forming oxides. A similar picture of channels closing explains the fact that the permeability of quartz to helium is less than that of vitreous silica by a factor of 10^7 or more.

In summary, glass could involve a permeability problem, particularly with helium, but one that can easily be circumvented by proper choice of composition.

Metals

The permeation of metals by gases is considered separately from polymers and glasses because of three outstanding characteristics: impermeability to noble gases, dissociation of diatomic gases in the process, and influence of surface films on the permeability.

All attempts to measure the permeability of noble gases have been unsuccessful. As examples, Ryder[28] found negative results on the permeability of iron to argon, as did Baukloh and Kayser[5] on that of nickel to helium, neon, argon, and krypton. The rare gas <u>ions</u> can be forced into

metals under a potential gradient, but penetration is relatively shallow and upon heating the metal the gas is released[21].

The processes of adsorption, dissociation, solution, and diffusion of a diatomic gas can lead to quite complicated rate laws under certain circumstances. Various limiting equations are given by Ash and Barrer[1]. However, for most metals at pressures over one atmosphere a square root law is followed as is the exponential relation, already mentioned in the case of polymers and glasses, so the permeability may be expressed by

$$P = \frac{P_0 (p_0^{1/2} - p_1^{1/2}) e^{-Ep/RT}}{d}$$

where K is a constant and p_0 and p_1 are the upstream and downstream pressures. This law is not followed when there is an appreciable coherent film (usually oxide) on the metal, when there is radiative or chemical interaction, or when the solubility of the gas is very high. An example of the latter is H_2-Pd above about one atmosphere, where the permeation rate is proportional to the 0.8 power of the pressure[8]. Examples of chemical interaction are the diffusion of nitrogen and oxygen through titanium[34] and hydrogen through zirconium[11]. In these cases a new phase is formed above a limiting pressure (rather low unless the temperature is high) and the reaction becomes essentially a corrosion reaction, with the effective gas pressure that in equilibrium with the upper limits of the new phase at the temperature in question. Under these circumstances the above equation becomes quite meaningless.

In most studies on the permeation of gases through metals, precautions are taken to eliminate surface films as far as possible in order to simplify interpretation. From a practical standpoint, the effect of surface films must be taken into account. As Flint[9] points out, surface films may be expected to become important barriers to diffusion when the oxide coating has a specific volume equal to or greater than that of the base metal. Metals falling in this category are Al, Si, Cr, Mn, Fe, Co, Ni, Cu, Zn, Pd, Ce, and Pb. Very few systematic studies have

been made in this field. Flint[9] prepared oxide films on Type 347 stainless steel by treatment in wet hydrogen and observed reduction in permeation rate of as much as 400 fold. However, these might be termed transient tests as the permeability increases with time, presumably as the oxide coating was reduced. Experiments with hydrogen and Inconel have given permeation rates independent of the thickness of the metal, thus indicating an over-riding effect of a surface film[22]. Several authors[32,12,30,27] have noted the effect of oxide films on aluminum or aluminum alloys; drops in permeability as much as 1000-fold have been found.

An effect that may become important for hydrogen (and possibly other gases) in space environment is production of atoms by radiation, although recent calculations[35] have tended to minimize this factor. Production of atomic hydrogen at iron surfaces by corrosion reactions with water and its subsequent diffusion into the metal is well known to corrosion engineers. The chemically produced atoms are equivalent to those at very high pressures and temperatures for normal hydrogen and, as previously mentioned, it is the atomic hydrogen that affords the mechanism for diffusion. One industrially important consequence of this effect was in the early days of metal vacuum tube manufacture, when it was found that water contained in sodium silicate paint was reacting with the iron, and hydrogen diffusing through the tubes made them gassy and inoperable[21]. Similarly, it has been found that a glow discharge increased the permeability of aluminum to hydrogen five-fold; conditions were not well enough defined in this case to attach quantitative significance to the result[27].

Laminates

The discussion up to this point has been concerned with homogeneous materials. There are, however, important practical cases where laminates are used. It is convenient for present purposes to distinguish two cases: one is where two or more plastics or elastomers are laminated and the permeabilities of the materials to the gas in question, while different, are not so far apart that any one of them can be negelected (an example

is the use of styrene-butadiene rubber liners in continuous-filament glass fiber-reinforced epoxy pressure vessels); the second is where a metal foil is laminated onto a polymer film as a permeation barrier, in which case the foil may be considered (for noble gases at least) to have zero permeability but the possibility of pinholes and their influence must be considered.

In the plastic laminate case one can, as before, define an over-all permeability, P by

$$P = \frac{Jd}{\Delta p} \tag{15}$$

In the steady state J is the same for all elements i of the laminate, so in addition

$$P_i = \frac{Jd_i}{\Delta p_i}$$

and also

$$\Delta p = \sum_i \Delta p_i$$

$$= J \sum_i \frac{d_i}{P_i} \tag{16}$$

Substitution of (16) into (15) and rearranging gives

$$\frac{d}{P} = \sum_i \frac{d_i}{P_i} \tag{17}$$

Equation (17) has been experimentally verified by Bhargava <u>et al</u>[6] for polyethylene-glassine laminates.

The case of a foil with pin-hole has been treated by Prins and Hermans[23]. For a foil, impermeable in bulk but with n circular holes/cm^2 of radius r, laminated onto a polymer of thickness d and

permeability P, and for $d/r > 0.3$ (the only case of practical interest) they found (in the present notation)

$$J = \left(\frac{P\Delta p}{d}\right)\theta \quad (1 + 1/18\ d/r)\,;\ \theta \ll 1 \tag{18}$$

where $\theta = n\pi r^2$, the fraction of free surface. The first two terms on the right of equation (18) simply express the reduction of permeation because of the reduction in free surface. The third term, however, can be a large multiplying factor, reflecting the spread of the diffusing gas in the polymer film. For very large value of d/r, equation (18) reduces to

$$J = 3.7\ nrP\Delta p \tag{19}$$

and the flux becomes proportional to the perimeter of the holes rather than to their area.

Distinction between Permeation and Mass Flow

The question often arises in permeability measurements whether the gas flux observed is all due to true permeation or whether part of it is due to flow through fine capillaries, whether they exist in the very nature of the film being studied (as is postulated by one group[31] for polystyrene below the glass transition temperature) or because of flaws such as cracks and pinholes. One progmatic approach, and often a successful one, is to determine apparent permeabilities on a number of samples, with the presumption that they won't all have the same number of flaws, and with different sample thicknesses, with the presumption that a flaw is less likely to penetrate through in the case of the thicker samples. If substantially the same value for P is obtained in all cases it is fairly good evidence either that true permeability is being measured or that other means of passing gas are inherent and uniform in the film being studied.

Sometimes the above method is not practical, possibly because of a limited choice of samples or because individual experiments take too long. Further, if inherent capillaries are suspected, it may be desirable to confirm or disprove the hypothesis. In either case a great deal can be learned from the behavior of the apparent permeability with temperature. The development below will be confined to a slightly soluble gas. As already pointed out, this is the only case where the theoretical temperature behavior of the permeability is simple. For simplicity it will also be confined to the case where the film has uniform capillaries and the gas in the capillaries is in equilibrium with that dissolved in the film, although these simplifications do not appreciably affect the conclusions to be drawn.

In the steady state the over-all flux is simply the sum of that due to diffusion and that due to mass flow:

$$- J = D \frac{dc_f}{dx} + \theta v c_g \tag{20}$$

where c_f denotes the concentration of gas dissolved in the film, c_g that in the gas phase in the capillaries, θ the fraction of the cross section that consists of capillaries, and v the velocity of the gas in the capillaries. Substituting $c_f = Sp$ and $c_g = p/RT$, equation (20) becomes

$$- J = DS \frac{dp}{dx} + \frac{\theta v}{RT} p \tag{21}$$

It is convenient to distinguish two cases: (1) the pressure is low enough, or the capillaries small enough, that Knudsen flow obtains, and (2) the capillaries be large enough that Poiseulle's law is followed.

In the Knudsen case, the velocity is given[10] by

$$v = - \frac{k_K}{\sqrt{\rho p}} \frac{dp}{dx} ; \quad k_K = r/6 \tag{22}$$

where ρ is the density of the gas. If small gas imperfections are neglected, $\sqrt{\rho p} = p\sqrt{M/RT}$. With this relation and equation (22), equation (21) becomes

$$- J = DS \frac{dp}{dx} + \theta k_K (RTM)^{-1/2} \frac{dp}{dx} \tag{23}$$

Equation (23) can be integrated directly, in x from 0 to d and in p_0 from 0 to p (for simplicity; a finite pressure on the low pressure side offers no difficulty) to give

$$- Jd = DSp_0 + \theta k_K (RTM)^{-1/2} p_0$$

Recalling that the permeability is defined by $-Jd/p_0$, it is evidently given by

$$P = DS + \theta k_K (RTM)^{-1/2} \tag{24}$$

In the Poiseulle case the velocity is given by

$$v = \frac{k_p}{\eta} \frac{dp}{dx} \; ; \; k_p = r^2/8 \tag{25}$$

where η is the viscosity of the gas. Again neglecting gas imperfections, η can be expressed by $\eta = \eta_0 (MT)^{1/2}$, where η_0 contains constants and the collision diameter. With this relation and equation (25) substituted in (21), and proceeding exactly as before, the permeability is given by

$$P = DS + \frac{\theta k_p p_0}{2\eta_0 RM^{1/2} T^{3/2}} \tag{26}$$

Frisch[10] using a somewhat different approach arrives at an equation formally identical with equation (20) (his equation (8)) and derives a relation identical with equation (24) (his equation (10)). His equation (12), however, is not the same as equation (26) above, in that his implicitly contains $T^{-5/2}$ in the second term on the right. This appears to be an algebraic error (not typographical since it is carried

on to his equation (33)). Intuitively one would expect that if the velocity is proportional to $T^{-1/2}$ the flux, which at a given velocity is proportional to $(RT)^{-1}$, would be proportional to $T^{-3/2}$.

The important point is that the product DS, which might be termed "true" permeability, depends exponentially on the temperature and almost invariably (in the case of permanent gases) strongly increases with increasing temperature. Any component of Knudsen flow, even more strongly any component of Poiseulle flow, would decrease with increasing temperature. Thus the usual Arrhenius type plot of log P as ordinant vs. 1/T as abscissa should show strong curvature convex toward the origin as either of these types of mass transfer become important as the temperature is lowered. Indeed, as Frisch points out, a careful analysis of the temperature dependence of the apparent permeability should allow not only an estimate of how important mass flow is but what type of flow is important (molecular or viscous).

The above development has been based on mass transfer through a polymer film, where p is regarded as the driving force. There is no difficulty in extending it to metals, by simply substituting $c_f = Sp^{1/2}$ in equation (20) and defining P as $Jd/p^{1/2}$. This would alter the pressure dependence of the second terms to the right in equations (24) and (26), but the temperature behavior outlined in the previous paragraph would still obtain.

REFERENCES

1. Ash, R., and Barrer, R. M., Phil. Mag., 48, 1197 (1959).

2. Barrer, R. M., Trans. Far. Soc., 35, 628 (1939).

3. Barrer, R. M., "Diffusion in and Through Solids," Cambridge Press, London, 1951.

4. Barrer, R. M., and Skirrow, G., J. Polymer Sci., 3, 549 (1948).

5. Baukloh, W., and Kayser, H., Z. Metallik., 26, 156 (1934).

6. Bhargava, R., Rogers, C. E., Stannett, V., and Szwarc, M., TAPPI, 40, 564 (1957).

7. Daynes, H., Proc. Roy. Soc. (London), A97, 286 (1920).

8. DeRosset, A. J., Ind. Eng. Chem., 52, 525 (1960).

9. Flint, P. S., KAPL-659, 1951.

10. Frisch, H. L., J. Phys. Chem., 60, 1177 (1956).

11. Gulbransen, E. A., and Andrew, K. F., J. Electrochem. Soc., 101, 560 (1954).

12. Huffine, C. L., and Williams, J. M., Corrosion, 16, 430t (1960).

13. Krivetsky, A., et al., Bell Aerosystems Company, Report No. 7129-933003, March 1962.

14. Lasowski, S. W., and Cobbs, W. H., J. Polymer Sci., 36, 21 (1959).

15. Meyer, J. A., Stannett, V., and Szwarc, M., Ind. Eng. Chem., 49, 441 (1957).

16. Michaels, A. S., and Bixler, H. J., J. Polymer Sci., 50, 393 (1961).

17. Michaels, A. S., and Bixler, H. J., J. Polymer Sci., 50, 413 (1961).

18. Myers, A. W., Meyer, J. A., Rogers, C. E., Stannett, V., and Szwarc, M., TAPPI, 44, 53 (1961).

19. Myers, A. W., Meyer, J. A., Rogers, C. E., Stannett, V., and Szwarc, M., TAPPI, 44, 58 (1961).

20. Myers, A. W., Tammela, V., Stannett, V., and Szwarc, M., Modern Plastics, 37, 139 (1960).

REFERENCES (Continued)

21. Norton, F. J., J. Appl. Phys., 38, 34 (1956).

22. Norton, F. J., quoted by Flint, Ref. 9.

23. Prins, W., and Hermans, J. J., J. Phys. Chem., 63, 716 (1959).

24. Rogers, W. A., Buritz, R. S., and Alport, D., J. Appl. Phys., 25, 868 (1954).

25. Rogers, C., Meyer, J. A., Stannett, V., and Szwarc, M., TAPPI, 39, 741 (1956).

26. Rogers, C. E., Stannett, V., and Szwarc, M., TAPPI, 44, 715 (1961).

27. Russell, A. S., Metal Progress, 55, 827 (1959).

28. Ryder, H. M., Elect. J., 17, 161 (1920).

29. Salame, M., SPE Transactions, October 1961, p. 153.

30. Sawatzky, A., and Rees, M. J., Atomic Energy of Canada, Ltd., AECL-1252, 1960.

31. Schulz, G. V., and Gerrens, H., Z. Phys. Chem., N. Folge, 7, 182 (1956).

32. Smithells, C. J., and Ransley, C. E., Proc. Roy. Soc. (London), A150, 172 (1935).

33. VanAmerongen, G. J., J. Appl. Phys., 17, 972 (1946).

34. Wasilewski, R. J., and Kehl, G. L., J. Inst. Metals, 83, 94 (1954-55).

35. Wiederhorn, N. M., 2nd Quart. Prog. Report, NASA Contract No. NAS5-664, 1961.

IV PERMEABILITY OF MATERIALS TO GASES: EXPERIMENTAL DETERMINATIONS

Introduction

Presently available information indicates a wealth of data on the permeability of materials to common gases and chemicals, particularly as applied to packaging materials; also, large amounts of data are available on the compatibility of materials with gases and with storable propellants. More recently, some work has been done on the permeability of materials to cryogenics and storable propellants; however, we felt it desirable to establish permeability rates for various materials and gases by a more critical method than is generally employed. The permeability rate for a gas or a vapor through a solid material is ordinarily determined by use of a high-vacuum apparatus. In simple description, a film (or foil) is clamped in a suitable device and an enclosed volume on one side of the film is evacuated to a low pressure; then the other side of the film is exposed to a gas at a constant pressure. As the gas permeates the film, the increase in pressure on the low-pressure side of the film is measured by means of a mercury manometer or a McCleod gage. The pressure rise with time is noted, and the gas is allowed to continue to permeate the material until a steady state is reached and the gas is diffusing at a constant rate. The permeability constant is then obtained from the pressure-time plot and the calibrated volume of the measuring system.

In this program of work, permeability constants were determined by the use of a mass spectrometer to measure gas flow rates directly. This system offers several advantages over a closed manometric system: (1) There is no question as to the identity of the gas being monitored. (2) The sensitivity of the instrument permits detection of minute quantities of gas and thus relatively rapid measurement of very slow flow rates. (3) The measurement of flow rates of specific gases in a mixture of gases is a simple scanning procedure compared to the manipulations

involved in freezing-out or pumping-off the unwanted gases on the low-pressure side of the film as is necessary when a high-vacuum apparatus is used. (4) In the particular interests of this program, a dynamic system is more representative of the conditions likely to be encountered in space, e.g., the confinement of a pressurizing gas within a vessel which is exposed to the vacuum of space.

The earliest use of the mass spectrometer to measure the permeability of solids to gases was made by Norton[7] who determined the permeation of helium through glass bulbs of varying compositions. The permeability of various rubber films to helium and xenon was also determined mass spectrometrically by Norton,[8] and in a later paper he recapitulates work done on the permeation of solids to gases and discusses mass spectrometric techniques.[9] The high sensitivity of the mass spectrometer was a distinct advantage in the work of Frank et al.[3] Who determined the diffusion coefficients of hydrogen in steel and the ratio of the diffusion coefficients for hydrogen and deuterium in steel.[2] A more recent mass spectrometric determination of the diffusion of helium in glasses was performed by Altemose.[1]

Apparatus

The mass spectrometer used in this work is a Consolidated Electrodynamics Corporation Model 21-103C which has been modified to include an additional sampling system between the normal inlet system and the analyzing region; this system permits facile interchange of various sampling devices, operation with or without the gold (molecular) leak, a line-of-sight path directly into the analyzing region, and a small working volume (about 80 cc compared with the 3-liter expansion system). The mercury diffusion pump system generally employed for exhausting the analyzer region has been replaced with a 40-liter VacIon pump, and the oil diffusion pump on the inlet side has been replaced with a 15-liter VacIon pump. The replacement of the mercury pump with an ion pump eliminates cold-trap operation and contaminant mercury vapor in the analyzing tube, and the replacement of the oil pump eliminates hydrocarbon contamination throughout the entire system. Thusfar, the vacuum

attainable in the ion pump is of the order of 1×10^{-8} mm of Hg, the pressure on the pump side of the analyzing area is of the order of 1×10^{-7} mm of Hg, and the pressure in the ionizing region and sampling region is about 1×10^{-6} mm of Hg.

The photographs in Figures IV-1 and IV-2 show the permeability cell, designed and constructed for this work by R. F. Muraca; detailed drawings are given in Figures IV-3, IV-4, IV-5, and IV-6 at the end of this section. The cell is so constructed that a thin-film sample of the order of 1-mil thickness or a film of up to 50-mil thickness can be used; provision is made for compressing a film in place so that observations can be made as to whether gas diffusion rates through a polymer under compression differ from those when a polymer is in a relaxed state; with minor modifications, the cell could be used to carry out determinations of the diffusion rates of ionized gases. The cell can be isolated from the analyzer by means of a Hoke high-vacuum valve. The entire assembly is connected by stainless steel tubing to a separate gas-handling unit; this unit is used for mixing, purification, and measuring the pressures of the gases to be used. In addition, the inlet line of the assembly is connected to the spectrometer inlet system; this permits the outgassing of a membrane in the cell from both sides before a determination is made, and the direct analysis of the inlet gases.

Procedure

Once the sample film is in place in the permeability cell, the entire system is evacuated until the sample is completely outgassed. Then the gas, at measured pressure, is led into the cell from the gas-handling unit (see Figure IV-2), and the flow rate, or peak intensity, is monitored mass spectrometrically as the gas permeates the film. When a state of equilibrium is reached, i.e., the monitored peak stabilizes at a maximum level, the peak is recorded on the oscillograph and a rate-of-leak determination is then carried out in the usual fashion. This method of operation defines the rate-of-leak for the particular gas when the pressure in the analyzer is in a state of equilibrium between the gas flowing from the molecular leak and the buildup of back pressure

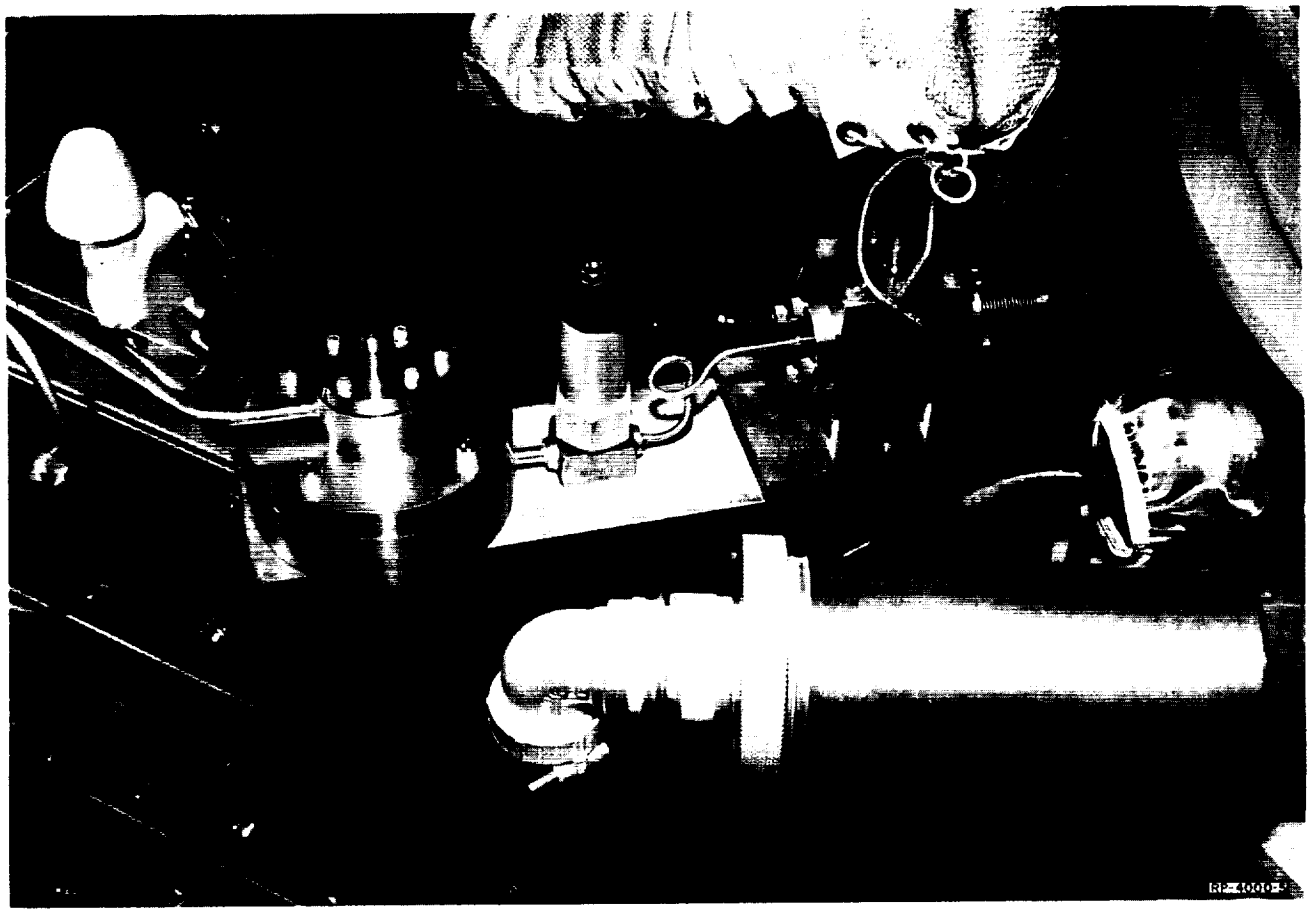

FIG. IV-1 PERMEABILITY CELL, VALVE, AND AUXILIARY SYSTEM LEADING TO THE ANALYZER TUBE OF THE MASS SPECTROMETER

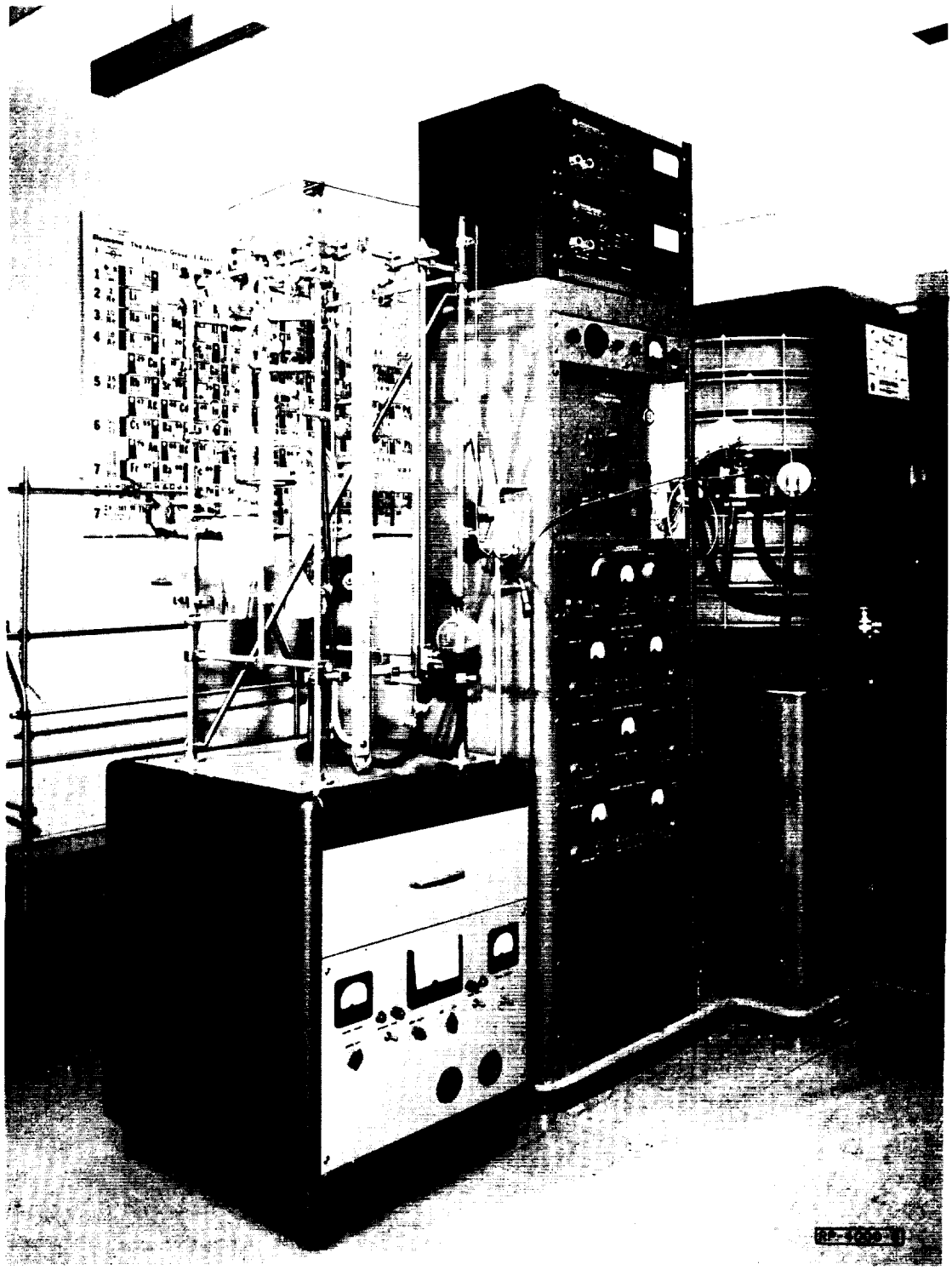

FIG. IV-2 VIEW OF GAS-HANDLING SYSTEM, CONTROL UNIT, AND PERMEABILITY CELL

from the ion pump. Then, the pressure of gas at equilibrium is estimated, the 3-liter expansion volume in the spectrometer inlet system is filled from the gas-handling unit to an equivalent pressure, and a calibration of peak intensity versus gas pressure is carried out. By this means, a precise calibration of the gas under duplicate operating conditions can be made.

Alternatively, if the permeation rate is very slow, the valve which separates the cell from the 80-cc volume and analyzing region is closed, and the permeating gas then can be accumulated in a very small volume (less than 5 cc) and periodically released for measurement. The peak height, and thus the flow rate, of a single gas can be measured at a given time in a few seconds; the peak heights from a mixture of gases can be measured at a given time within a few minutes.

The calculation of the permeability constant, P, is quite straightforward, once the rate-of-leak for the system, the steady-state gas pressure, and the volume of the system in front of the mass spectrometer leak have been determined:

$$P_T = L.R._{\%} \times \mu_{equil} \times t_{mils} \times K = c.c._{s.t.p.}\text{-mm/Sec/}A_{cm^2}/P_{atm}$$

where

PT	=	Permeability constant at temperature of determination
$L.R._{\%}$	=	Rate-of-leak of dynamic system expressed as % of volume per minute
μ_{equil}	=	Steady-state permeating gas pressure in microns
t_{mils}	=	Thickness of film in milli-inches
K	=	Constant embodying volume, area of sample, gas pressure, and temperature correction factors.

A single determination of the permeation constant of common gases through a polymeric film can be carried out in less than two hours by the mass spectrometric procedure with an estimated accuracy of ±2%; it is estimated that precise determinations (±1%) involving a series of sample films can be completed during a normal working day.

The performance of the permeability cell and the entire flow-and-control system was demonstrated with initial runs made with helium and polyethylene. Then, as a means of comparing the results obtainable with this apparatus with published data, the permeability of a 4-mil polyethylene film (unknown definition) to helium, nitrogen, and oxygen was determined. The results of these trial runs are given in Table IV-1.

Table IV-1

PERMEABILITY OF POLYETHYLENE
TO VARIOUS GASES AT 29°C

Gas	$P \times 10^7$ (a)	$P \times 10^7$ (b)
Helium	7.8	4.6
Nitrogen	1.3	1.0
Oxygen	3.1	3.7

(a) This work

(b) See tabulated data, "Handbook for the Design of Pressurized Gas Systems"

In addition, various samples of commercial polymeric films, such as Mylar, Saran, Teflon, and polyethylenes were picked up at random in the laboratory for spot-check permeability determinations; these random, unidentified samples were found to be so full of holes that permeability rates could not be determined.

Determinations

The particular samples of polymeric films to be examined were selected because they are representative of gasket materials used in pressurized gas systems and because the laminated metal-plastic construction of some of these materials is the forerunner of an analogous construction technique for pressurized-gas, epoxy-glass fiber vessels. The results of these determinations are given in Table IV-2. The permeability constants, P, were calculated in accordance with the equation given on page 4.

The permeability of nitrogen tetroxide through a 10-mil thick sample of Teflon FEP, Type 506 (provided by JPL) was determined and found

Table IV-2

PERMEABILITY OF SOME POLYMERIC MATERIALS TO NITROGEN

Polymer and Source	t (mils)	$P \times 10^{8*}$
Polyethylene		
Marlex, Phillips	6	2.6
Marlex, Phillips No. 6002	6	2.4
Marlex, Phillips No. 6002	6	1.9
Marlex, Phillips No. 6002	10	2.9
Marlex, Phillips No. 6002	2	2.9
Marlex 50	25	6.2
Marlex 50	24	1.4
Mylar		
DuPont, Type A	2	0.60
DuPont, Photographic	7	0.59
Teflon		
FEP-Al dispersion, JPL	11.5	2.50
FEP-Al dispersion	11.5	2.20
FEP Type 506, JPL	10	18.7
FEP Type 506, JPL	30	15.3
FEB Type 506, with 1-mil Al Coating, JPL	5	6.11

*$P = cc_{stp}$-mm/sec-cm^2-atm at 30°C

to be 2.85×10^{-6} cc_{stp}-mm/sec-A_{cm}^2-P_{atm} at 30°C. This result is compared with the results of some other workers, using various Teflons, in Table IV-3. Following the determination of the permeability of Teflon FEP (Type 506) to nitrogen tetrozide, the permeability rate of nitrogen was determined on the same sample. In view of the fact that the value was the same as previously measured for nitrogen through this Teflon, it was assumed that the contact of nitrogen tetroxide with the Teflon sample did not cause deterioration of the polymer structure.

An attempt was made to determine the permeability of hydrazine through the Teflon FEP which had been used for the nitrogen tetroxide and subsequent nitrogen determinations (because it was the only sample available). However, the pressure did not equilibrate, and the mass spectrum indicated decomposition of the hydrazine (apparently due to catalytic decomposition), even after several days of conditioning the entire system (and sample) with hydrazine.

Discussion of Mass Spectrometric Determinations

A plot of characteristic data obtained in the determination of the permeability of Teflon FEP-aluminum dispersion to nitrogen is given in Figure IV-3. Figure IV-4 gives the experimental points obtained for nitrogen (one atmosphere upstream pressure) through 30-mil Teflon FEP. The smoothed experimental data were plotted according to the "early" approximation of Rogers, Buritz, and Alport.[10] The mass spectrometric method is particularly adapted to this type of analysis since flux, rather than integral pressure rise in the time-lag or "late" approximation method, is measured directly.

In analyzing the data of Figure IV-4, the approximately 11-division reading obtained immediately was taken as a fixed background, whether from holes or general degassing; a reasonably straight line is obtained, obeying the relation:

$$\log(t^{1/2} \times \text{div.}) = 3.65 - 173/t \qquad (1)$$

The slope of this curve corresponds to a diffusion coefficient of 6.0×10^{-8} cm /sec and a "time lag" of 277 seconds. The above equation

Table IV-3

PERMEABILITY OF TEFLONS TO NITROGEN TETROXIDE

Teflon	t(mils)	$P \times 10^8$	Reference
FEP, type 506	19	285	a
Cast sheet	16	2900	b
FEP	11	37.3	c
TFE-7	10	126	c
30	10	270	c

a. SRI Monthly Status Report No. 6, NAS7-105, October 26, 1962.
b. Vango, S.P., JPL Tech. Memo. No. 33-55, August 25, 1961.
c. Liberto, R. R., Bell Aerosystems Co. Report No. 8182-933006, September 1962.

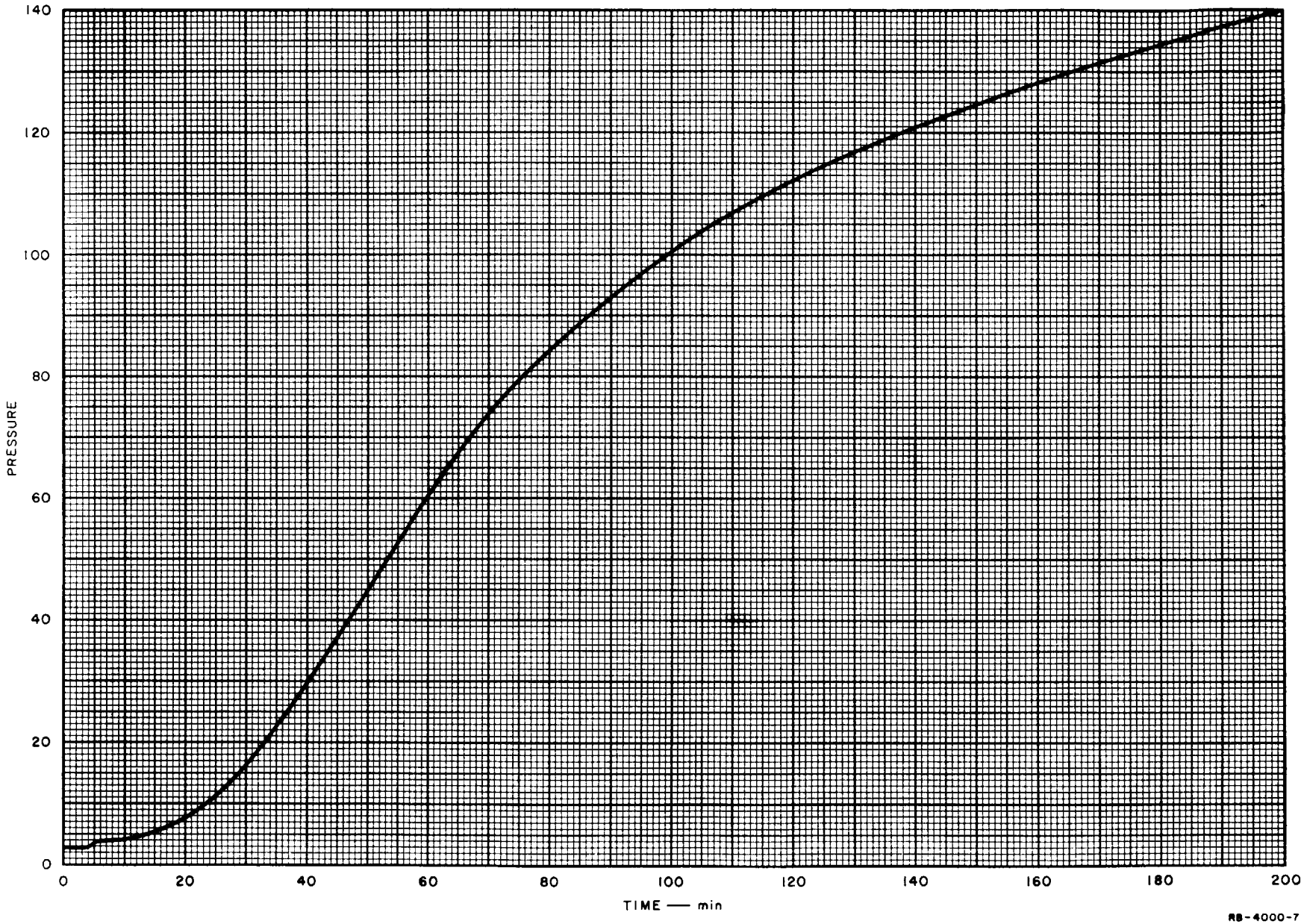

FIG. IV-3 RATE OF PERMEATION OF NITROGEN THROUGH TEFLON FEP-ALUMINUM

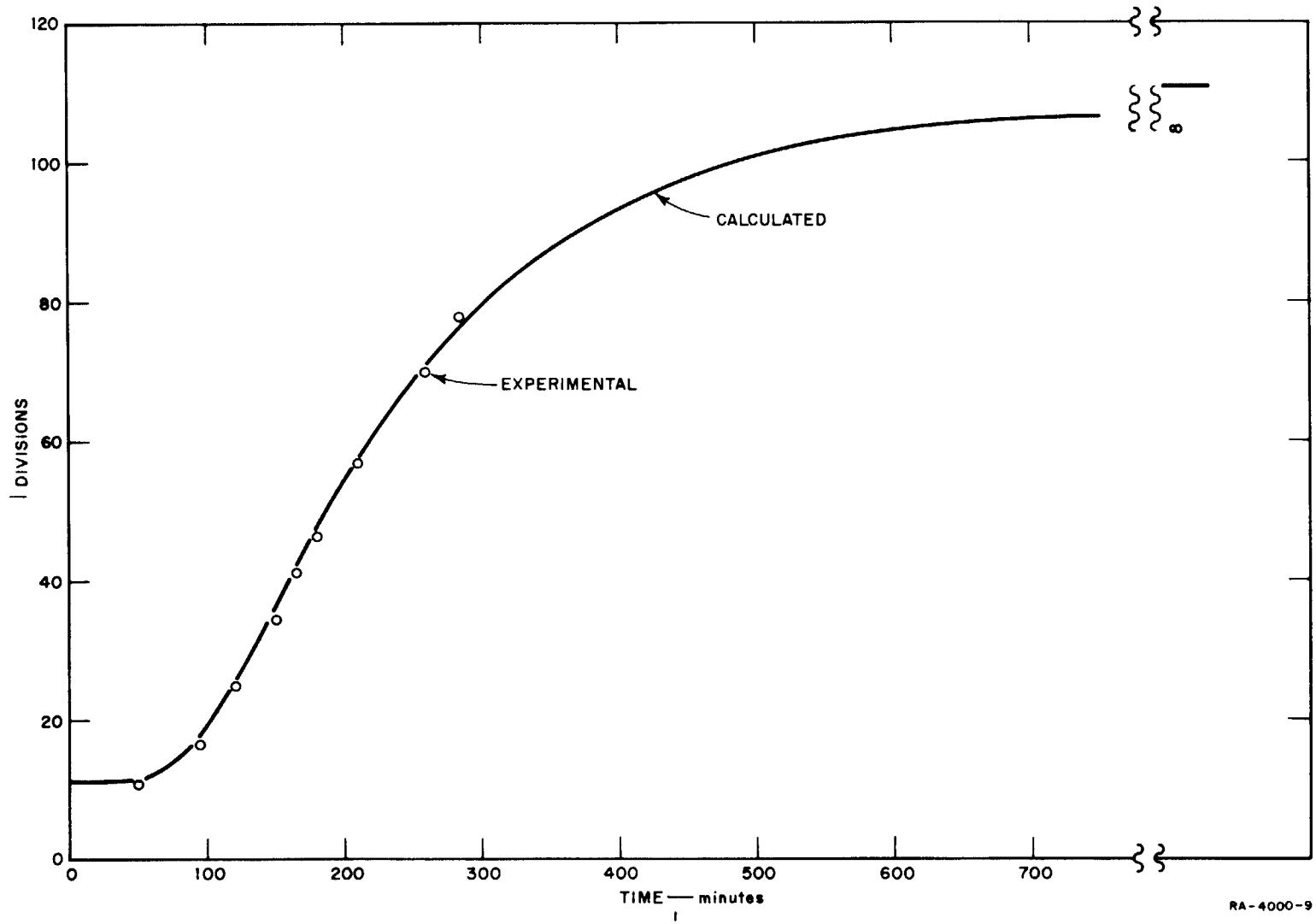

FIG. IV-4 PERMEATION OF NITROGEN THROUGH TEFLON FEP

plus the dimension of the sample are sufficient to approximate the course of the permeation velocity, shown as the full curve in Figure IV-4.

The curve fitting of Figure IV-4 was done only with slide-rule accuracy, and is considered satisfactory for the present. Although it should be checked by long-term runs, it appears that the mass spectrometric method is well-suited for rapid measurements in the transient state to obtain the course of permeation with time. This type of analysis is also somewhat helpful in pointing out the parameters and their role in short term permeation. Denoting the flux at "short" times ($t \leq 2.7d^2/6D^2$; d = thickness, D = diffusion coefficient) by J and at very long times by J_∞

$$J/J_\infty = 2d(D\pi t)^{-1/2}\exp(-d^2/4Dt). \tag{2}$$

In the example just given, $J/J_\infty = 0.01$ (again ignoring the background) occurs at about one hour.

According to a Bell Aerosystems report[4] MON (and hence presumably N_2O_4) comes to equilibrium across a 7-mil Teflon sheet in a few days. For a long mission with a re-start, it might be desirable to know the permeability with a relatively low pressure differential and near saturation on both sides.

In the mass spectrometric method for measuring permeabilities, the pressure on one side is set at P_o and on the other at essentially zero. By definition, the over-all permeability $\overline{P}$, the thickness t, the flux J, and P_o are related by:

$$J = \overline{P}p_o/t \tag{3}$$

One can equally well define a differential permeability by ($0 < x < t$):

$$J = Pdp/dx \tag{4}$$

Equating (3) and (4) and integrating from $x = 0$, $p = 0$ to $x = t$, $p = p_o$ gives a relation analogous to a well-known case for integral and differential diffusion coefficients:

$$\overline{P} = \frac{1}{p_o}\int_o^{p_o} Pdp \tag{5}$$

Differentiating (5) with respect to p_o gives the relation sought:

$$P = \overline{P} + d\overline{P}/d\ln p_o \tag{6}$$

For most "permanent" gases through most films, $\overline{P}$ is independent of p_o and equation (6) is trivial. Where swelling occurs, however, P and $\overline{P}$ may differ appreciably. For water through Nylon 6-6 at 25°C, $P(sat.) = 7.5\overline{P}(sat)$, calculated from data of Myers et al.[6] and for methyl bromide through polyethylene at -15°C, $P(sat.) \approx 7.8\overline{P}(sat.)$, calculated from the data of Meyer et al.[5]

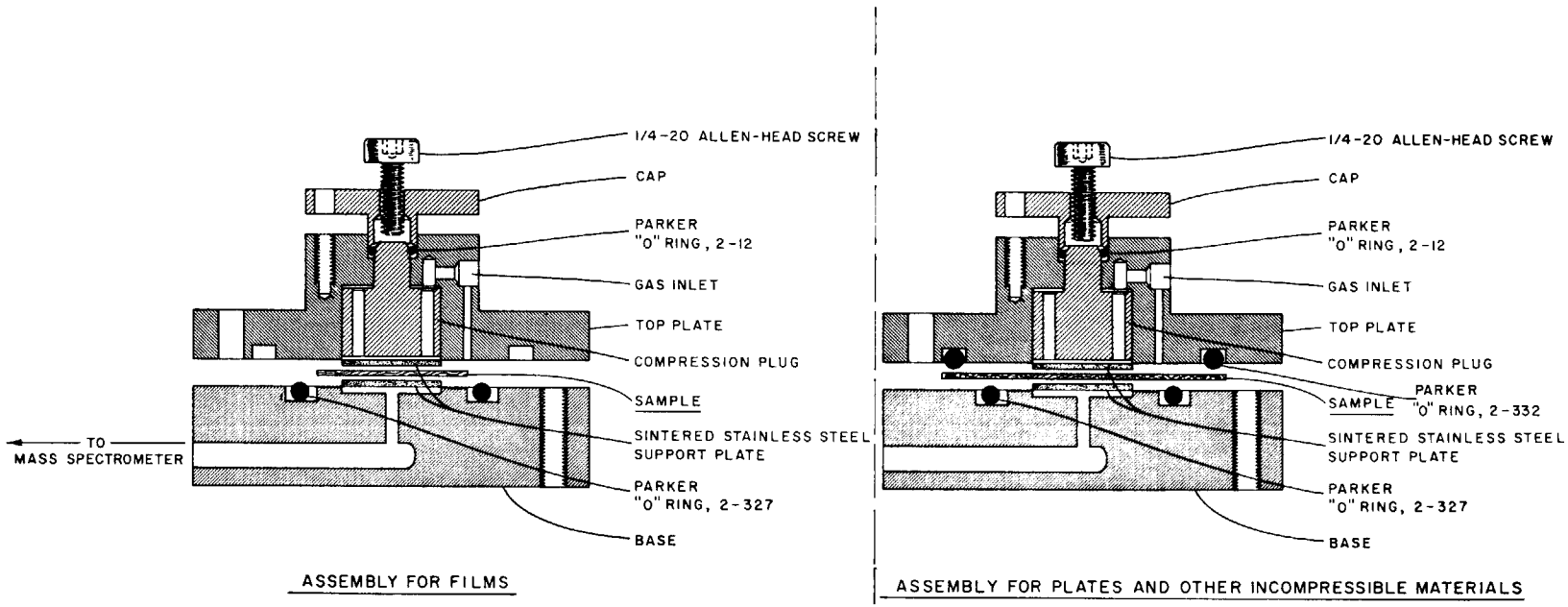

FIG. IV-5 PERMEABILITY CELL FOR MASS SPECTROMETER

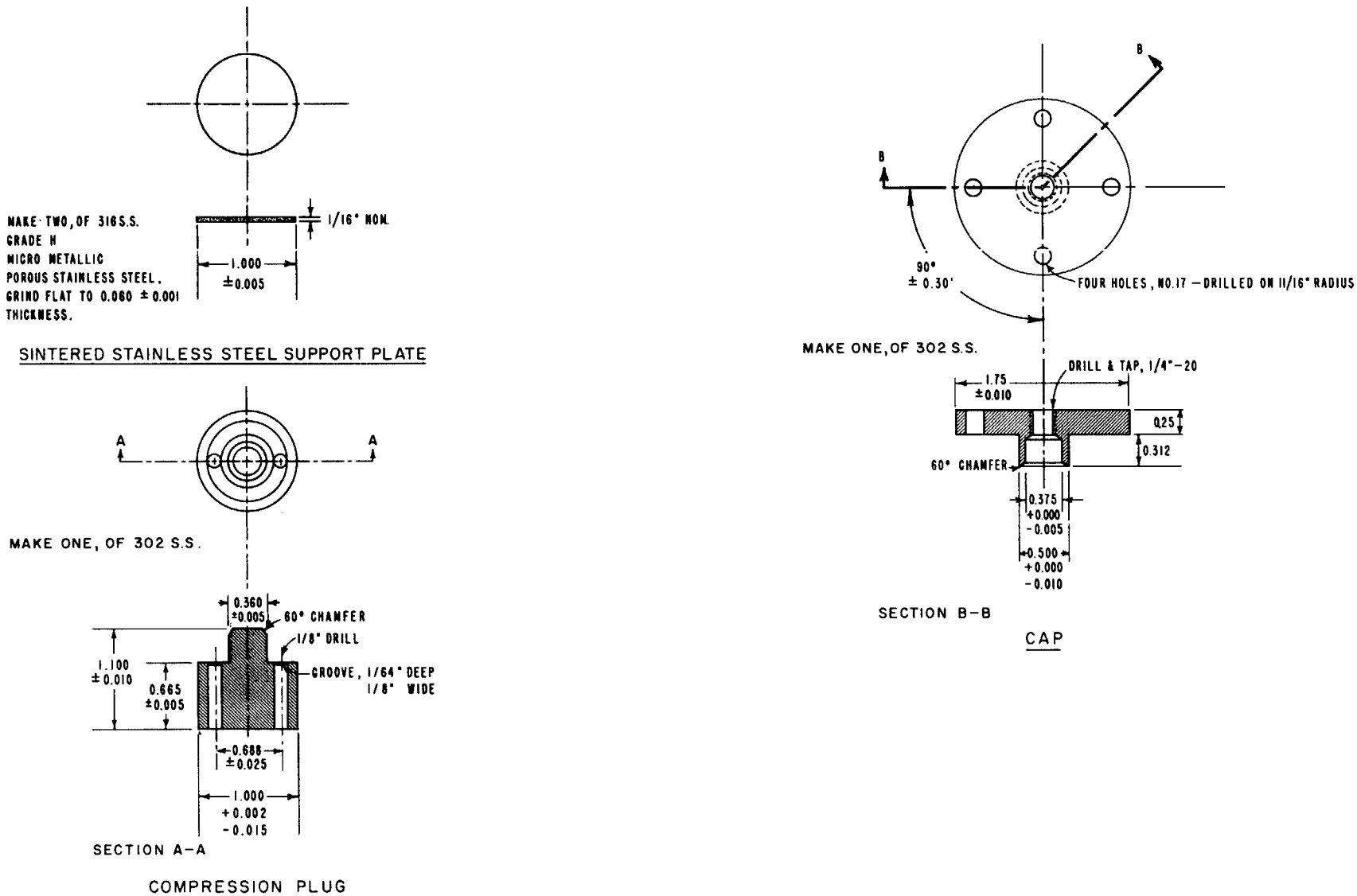

FIG. IV-6 SUPPORT PLATE, COMPRESSION PLUG, AND CAP FOR PERMEABILITY CELL

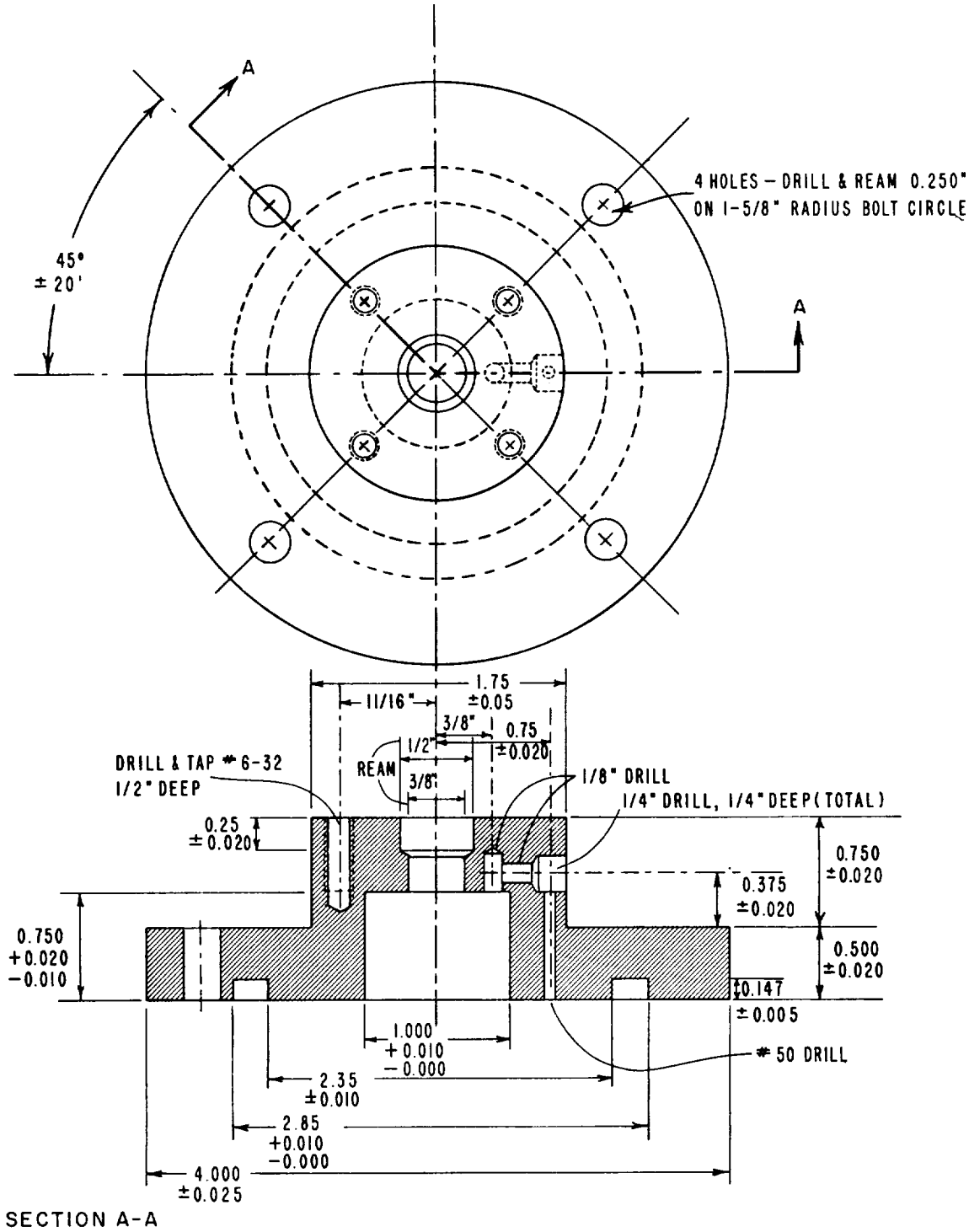

TOP PLATE

FIG. IV-7 TOP PLATE OF PERMEABILITY CELL

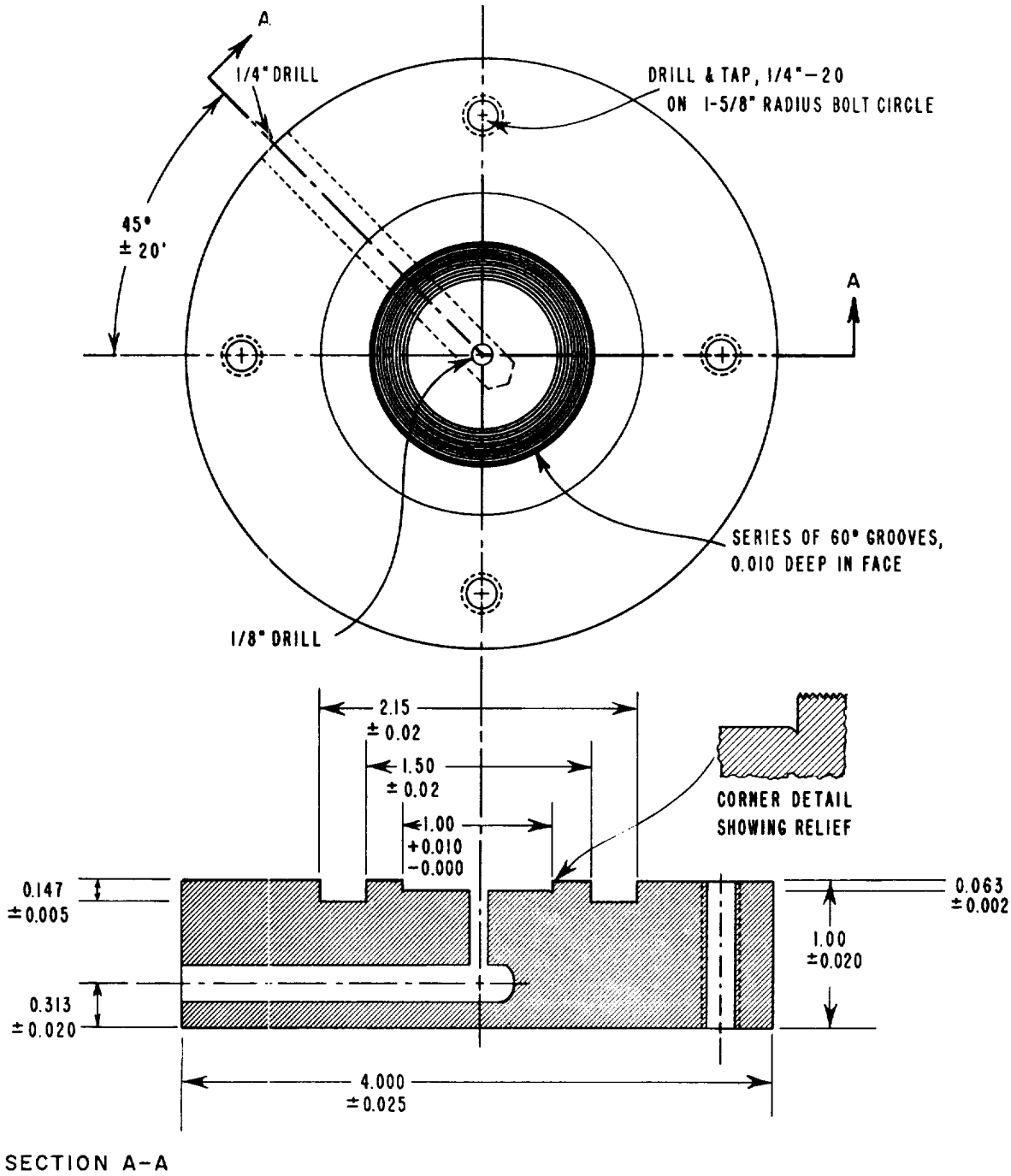

BASE

FIG. IV-8 BASE OF PERMEABILITY CELL

REFERENCES

1. Altemose, V.O., J. Appl. Phys., 32, 1309 (1961)
2. Frank, Robert C., Lee, Robert W., and Williams, Robert L., J. Appl. Phys., 29, 898 (1958).
3. Frank, Robert C., Swets, Done E., and Fry, David L., J. Appl. Phys., 29, 892 (1958).
4. Krivetsky, A., et al., Bell Aerosystems Co., Report No. 7129-933003, March 1962.
5. Meyer, J. A., et al., Ind. Eng. Chem., 49, 441 (1957).
6. Myers, A. W., et al., TAPPI, 44, 53 (1961).
7. Norton, Francis J., J. Am. Ceramic Soc., 36, No. 3, 91 (1953).
8. Norton, Francis J., J. Chem. Phys., 22, 1145 (1954).
9. Norton, Francis J., J. Appl. Phys., 28, 34 (1957).
10. Rogers, W. A., Buritz, R. S., and Alport, D., J. Appl. Phys., 25, 202 (1954).

V EXAMINATION OF PRESSURIZED GAS VESSELS

Introduction

It is to be recalled that all theoretical calculations of permeabilities are of little value in calculating the storage life of pressurized gases in space systems if current methods of tank construction inadvertently provide leakage paths for the gases. It is obvious that the only way to obtain a practical reliability coefficient for the storage life of pressurized gases in a given system is by performing measurements on finished systems. In addition to providing satistical data, the vacuum apparatus described below was designed to locate sources of leakage and thereby indicate where improvements in the technique of construction must be made.

Apparatus

The vacuum apparatus which was used for localized-leak detection was constructed at the Institute and is illustrated in Figure V-1. The 29" x 20" cold-drawn steel chamber is mounted horizontally on a steel rack which also houses the pumping system and utility lines; the length of the chamber can be increased to about 4 feet by a simple extension collar. Flanged openings in the chamber are used for viewports, electrical leadthroughs, etc. The backing plate is fitted with a rotating shaft which carries a helium pressurizing line.

The pumping system consists of a Welch 1397E mechanical pump and a Consolidated Vacuum Corporation MCF-500 oil-diffusion pump. The chamber can be evacuated to a pressure of 2×10^{-5} Torr without a cold trap; this pressure was considered adequate for testing the pressure vessels. Pressure is measured by means of a vacuum gauge (Pirani and ionization gauges) which was designed by R. F. Muraca and constructed at the Institute.

An ion-pump probe assembly, consisting of a 0.2 liter/second Varian VacIon pump encased in a copper container, was fastened to an arm which

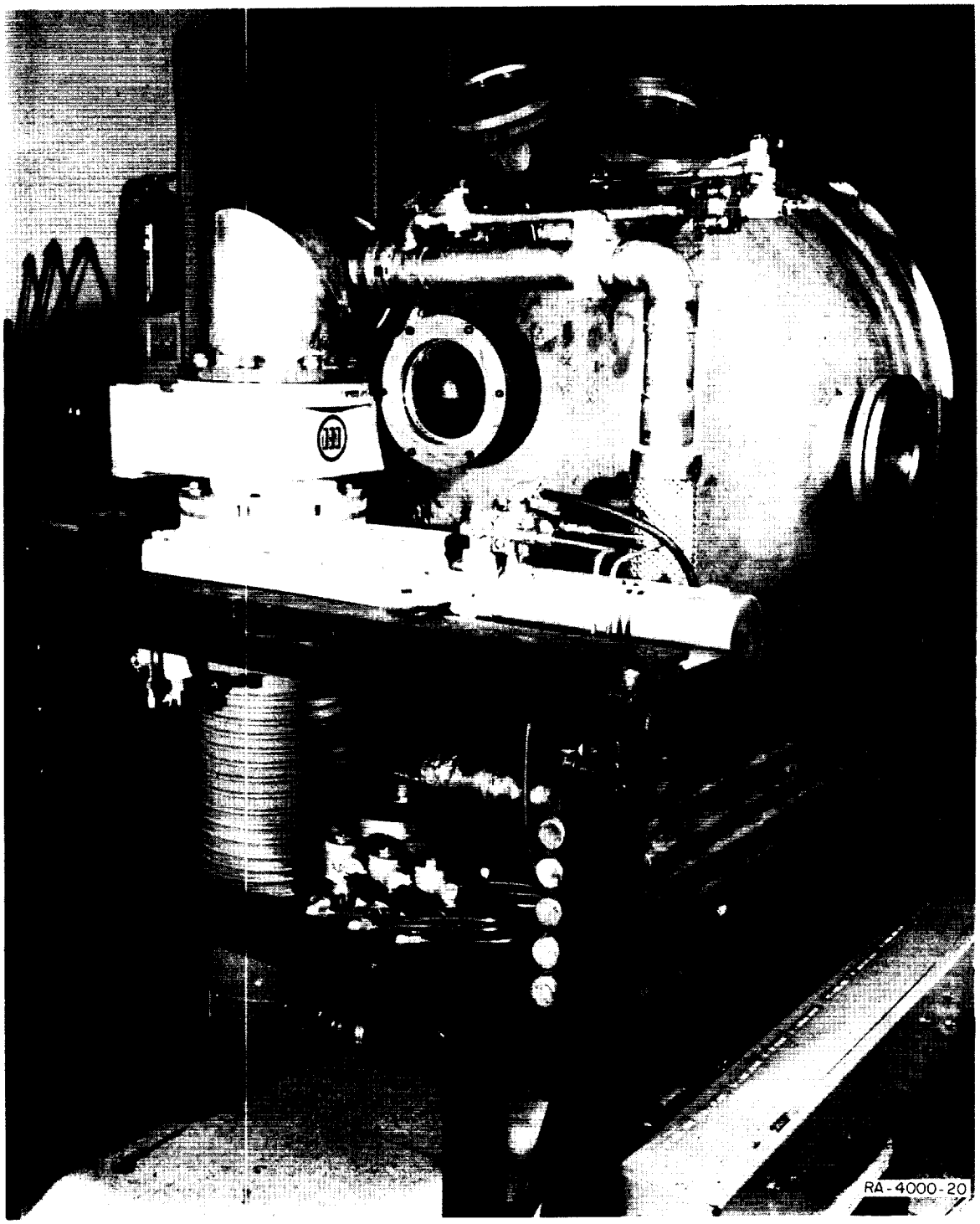

FIG. V-1 LARGE VACUUM APPARATUS USED FOR TESTING LEAKAGE OF PRESSURE VESSELS

was manipulated from outside the chamber by means of a steel ball joint. However, the ion-pump probe appeared to be too insensitive for this leak check, and a VG-1A ionization gauge was substituted for the leak-probe.

Pressure Vessels

The pressure vessels used for these tests are typical of the kind actually used for space vehicles; Mr. Frank E. Compitello, NASA/Washington, was instrumental in locating these vessels and arranging for their loan. Through the courtesy of the Jet Propulsion Laboratory, several titanium-alloy spheres were made available for these tests. The 8-1/4"-diameter spheres (Airite) were designed as helium pressurization vessels for RANGERs 1 and 2, and have passed normal flight acceptance tests; a 5-3/4"-diameter sphere (Menasco) of the kind used for RANGER 3 has also passed flight acceptance tests. In addition, a 17-1/2"-diameter titanium=alloy sphere (Airite) was provided; this sphere was made as a part of a program to evaluate welding techniques.

A 10"-diameter epoxy-glass fiber sphere (Aero Rove) was made available for testing through the courtesy of the Aerojet-General Corporation, Azusa.

The spheres were fitted with high-pressure valves and fittings as specified by JPL and AGC. The table below indicates the operating pressures of these spheres and therefore the pressures at which they were tested.

Sphere	Operating Pressure
8-1/4" titanium alloy	3000 psi
5-3/4" titanium alloy	4000 psi
17-1/2" titanium alloy	1500 psi
10" epoxy-glass fiber	3000 psi

Before being used for leak tests, the spheres were subjected to hydrostatic pressure tests well in excess of the recommended operation pressures; subsequently, they were dried at 110°C while a low pressure of dry nitrogen was circulated through them.

Procedure and Results

By means of high-pressure fittings, a pressurized gas sphere was attached to the rotating shaft in the backing plate of the vacuum chamber and the chamber was closed. When the chamber had been evacuated to a pressure of 1×10^{-5} Torr, the sphere was pressurized with helium through the rotating shaft. Leakage was checked with the probe while the pressure was being increased and subsequently while the pressure was being decreased. The probe was held in one position while the sphere was rotated, and then the test was repeated with the probe in another position. In this fashion, the entire outer surface of the sphere was checked.

The results of these leakage tests are given in the table below.

Sphere	Helium Pressure	Result
8-1/4" titanium alloy	3000 psi	No leakage detected
5-3/4" titanium alloy	4000 psi	No leakage detected
17-1/2" titanium alloy	1500 psi	No leakage detected
10" epoxy-glass fiber	3000 psi	After preliminary outgassing, perceptible leakage was observed at all positions of the probe next to the sphere.

VI EXPANSION OF PRESSURIZING GASES

Introduction

The over-all conclusion that if a permanent gas is used for rapid expulsion some means for supplying heat should be found is in agreement with that of Kaplan[1], but the detailed temperature history calculated below is in violent disagreement with Kaplan's.

It is assumed that the gas is stored in a bottle at pressure P_o and volume V_o and, at restart, is rapidly expelled through a pressure regulator into a propellant tank at P_t. For simplicity, the final pressure in the bottle will be taken as P_t, although allowing for system losses is not difficult. Further, the weight of only the bottle and its contained gas will be considered, and it is assumed that there is no heat exchange between the gas and the bottle, tank, valves, etc. The case of a perfect gas will be treated first under the conditions (a) there is perfect heat exchange between the bottle and the tank (unlikely) and (b) there is no heat exchange between the bottle and the tank (equally unlikely, but probably closer to the truth). Some of the effects of a real gas will then be considered, although in all cases C_v will be taken as a constant.

Perfect Gas

(a) Final temperature in the bottle and tank, T_t, equal.

Material balance: $P_t V_t = nRT_t - O_t V_o$

First law: $P_t V_t = nC_v (T_o - T_t)$ (Using $(\partial E/\partial V)_t = 0$)

$$\text{hence:} \quad T_t = \frac{nC_v T_o + P_t V_o}{nR + nC_v}$$

$$- T_o\left[1/\nu + (1 - 1/\nu) P/_t P_o\right]. \quad (\text{using } C_p - C_v = R) \tag{1}$$

For a reasonable size bottle (over about 1000 in^3) the weight is given by $KV_o P_o$, hence the weight of bottle plus gas is

$$W = Mn + KV_o P_o \tag{2}$$

where M is the molecular weight of the gas. A reasonable figure of merit is the work performed $(P_t V_t)$ per unit weight which, after algebraic manipulations, comes out to be

$$F = (1 - P_t/P_o) / \nu (M/RT_o + K) \tag{3}$$

(b) No heat exchange between the bottle and the tank.
The initial conditions are $P_o V_o = nRT_o$ and the final conditions $p_t V_t = n_t RT_t$, $P_t V_o = n_B RT_o$ which with $n - n_t + n_B$ gives

$$P_t V_t = nRT_t - P_t V_o T_t/T_o \tag{4}$$

First law, $p_t V_t = n_t C_v(T_o - T_t)$ (since all cooling now occurs in the tank). Using $n_t = p_t V_t/RT_t$ and $R - C_p - C_v$;

$$T_t = T_o/\nu \tag{5}$$

Using (2), (4), and (5), F is found to be identical with that given by equation (3).

Van der Waals Gas

Complete calculation of the temperature changes attendant on the expansion of a real gas, with varying C_v, etc. could be quite tedious. However, if a van der Waals gas is assumed and with C_v a constant, estimation of the temperature drop due to no-work, no-heat-absorbed-from-surroundings expansion is relatively easy and this in turn allows an estimation of the temperature drop in the bottle and the seriousness of non-ideality.

Per mole of gas the following is exact:

$$dE = C_v\, dT + T(\partial P/\partial T)_v - P\, dV$$

For a van der Waals Gas

$$P = RT/(v - b) - a/v^2$$

hence

$$dE = C_v\, dT + \frac{a}{v^2}\, dv$$

If $q = 0$ and $w = 0$ obviously $dE = 0$. Integrating the last equation from T_o to T_f and from v_o to ϵv_o

$$T_o - T_f = \frac{a}{C_v}\,\frac{\epsilon - 1}{\epsilon v_o} \qquad (6)$$

Thus (6) gives the final temperature in the bottle under the (more or less realistic) conditions IB, above.

Some Numbers

(a) Temperature drop

For He, Lange gives "a" as 0.03412 atmos. liter^2 mole^{-2}. Taking V_o as 0.1 liters/mole (about 4500 psia at 298°K), ϵ as 10, C_v as 3 cal/mole, and multiplying a/V_o by 24.2 to convert to cal/mole, equation (6) gives a temperature drop of 2.5°C in the bottle, which is entirely negligible (a crude integration of $(\partial E/\partial V)dV$ from the Beattie-Bridgeman equation of state lead to a rise of about 1.1°C). From equation (5) the temperature in the tank (taking T_o = 298°K, γ = 1.65) is 181°K, a drop of 117°C (211°F).

These figures bear little resemblance to a graph given for He by Kaplan (no details of calculation except that the bottle is initially at 4500 psia and 60 or 100°F and the final tank pressure is 450 psia (temperature initially the same as the bottle), which shows a drop in the bottle temperature of 270°F and in the tank temperature of about 140°F.

For H_2, Lange gives "a" as 0.2444. Taking C_v as 4.8 cal/mole and other conditions as above, equation (6) gives a drop of 11°C in the bottle. This is slightly more serious but is probably an over-estimate, so identifying T_f with T_o in equation (5) shouldn't give too bad an estimate of the tank temperature.

Taking δ as 1.40 this comes out to be 205°K, a total drop of 93°C (167°F).

For N_2, Lange gives "a" as 1.390. Taking C_v as 4.8 cal/mole, equation (6) gives a drop of 75°C in the bottle. This temperature change is serious and makes N_2 a poor candidate compared to the above two (in addition to the weight penalty). Further, the large departure from ideality makes application of (5) or (6) invalid, consequently, no further calculations are justified.

(b) Storage efficiency

In order to use equation (3), an estimate of K must be obtained. For glass fiber reinforced epoxy the total impulse-weight ratio of Fig. 1, p. III-4, Quarterly Progress Report No. 1, indicates $K = 2.7 \times 10^{-2}$ g/cal; Wiltshire's curves[2] indicate $K = 10.4 \times 10^{-2}$, and calculations from some of Wilshire's data gave $K = 4.7 \times 10^{-2}$ g/cal. Taking the last value,

F for He = 10 cal/g

H_2 ~ 12 cal/g

N_2 ~ 5 cal/g (extremely inaccurate).

The quantity K serves, of course, as a leveler; if K = 0 the corresponding values are 83, 187, and ~ 10 cal/gm.

References

1. Kaplan, C. J., ARS J., 31, 786 (1961).
2. Wiltshire, A. J., Materials in Design Eng., November 1958, p. 101.

VII ALTERNATIVE METHODS OF GAS STORAGE

Introduction

Pressurized gas storage efficiency has been examined both from the standpoint of comparison of gases on simple pressurization for isentropic propellant expulsion and from the standpoint of some selected alternative methods of storage; the following paragraphs summarize the results of the examination of some of the alternative methods.

Clathrates - Quinol forms clathrate (caged compounds) with such materials as methanol, sulfur dioxide, argon, krypton, and xenon. When containing such materials, the quinol crystallizes in the beta form having a density of about 1.26 with roughly spherical "holes" about 4.6 Angstroms in diameter and one cavity to three host molecules. According to the statistical mechanical treatment of J. H. Van der Waals[3] all of these cavities cannot be filled at a finite pressure; however, with argon, 90 percent of the cavities could be filled at a pressure of about 45 atmospheres. The neon clathrate has not yet been experimentally prepared and calculations indicate that a pressure of 2200 atmospheres would be required for its formation. The helium clathrate is perhaps incapable of preparation presumably because the helium atom is too small to be retained. Experimentally it has been determined that 406.5 g-moles of quinol are needed to form a clathrate with 135.5 g-moles or argon; this corresponds to a host-to-guest molecular ratio of about 4 to 1.36.

The rare gases also form solid cage compounds with water, and experiments have indicated that these compounds have six host molecules per guest molecule[1]. Thus, if these compounds were to be used as storage devices for pressurized gases, the water clathrate compounds appear more favorable on weight basis than the quinol clathrate compounds. However, the stability of the water compounds is not favorable for pressurized storage systems because the "decomposition temperature" of the argon hydrate, for example, has been found to be -42.8°C.

Helides -- H. Damianovich has reported the formation of a platinum "helide" by the sputtering of platinum metal at low pressures.[2] His calculations indicate that 36.4 cc of helium at S.T.P. can be bound by one gram of metal; however, this figure is never obtained in practice. The helium gas occluded by the sputtered metal appears to be liberated in two steps, one at about 100°C and the other at about 300°C. The specific gravity of the combination is in the vicinity of 16.5. The use of helides as storage devices for pressurized gases is not advantageous largely because of the high metal-to-gas weight ratio. Substitution of other metals is a possibility, but again the compounds will be altogether too heavy.

Hydrides -- Lithium borohydride (18.4% hydrogen) appears to be an attractive compound from the point of view of its hydrogen content. A cursory survey of the literature reveals that the mode of thermal decomposition of this compound is little understood and that only about 75 percent of the hydrogen is readily available. If the compound can be induced to give up all of its hydrogen, calculations indicate that the material appears attractive as a pressurized-gas storage device in comparison with pressurized nitrogen. However, detailed calculations on the trade-off for heating equipment as well as better knowledge of the mode of decomposition is required to make a firm comparison. Lithium borohydride will also react with water to liberate both its own hydrogen and that of the water, according to the equation

$$LiBH_4 + 2H_2O \rightarrow LiBO + 4H_2$$

The reaction is reported to be catalyzed by Co (II) or Ni (II). No data are at hand on the smoothness or completeness of the reaction; but no heating equipment would be required since it is endothermic by 17.7 kcal per mole of H_2.

Aluminum borohydride, a liquid at room temperature containing 9.6 percent hydrogen, also appears to be attractive and may be better suited than lithium borohydride. Titanium hydride does not appear to be a

likely candidate because of the relatively low hydrogen content (4%), and the difficulty encountered in inducing it to liberate its hydrogen content at relatively low temperatures. Magnesium hydride, on the other hand, appears to decompose quite cleanly. The compound contains 7.6 percent hydrogen and has a density of 1.42.

Summary

Preliminary estimates have been made of the relative weights of various systems involving the compounds discussed above. The following table summarizes the results of these calculations.

Table VII-I

RELATIVE WEIGHTS OF THE VARIOUS SYSTEMS WHEN USED AS PRESSURIZED-GAS STORAGE DEVICES FOR ATTITUDE CONTROL

System	Relative Weight	Remarks
$LiBH_4$	0.40	Neglecting auxiliary heating equipment; conditions for obtaining all of the H_2 not known.
$LiBH_4 + H_2O$	0.55	No heating required but conditions for obtaining all of the H_2 not known.
Pressurized N_2	1.0	
MgH_2	1.0	Neglecting auxiliary heating equipment.
Argon-H_2O	1.6	Neglecting auxiliary heating equipment.
Pressurized H_2	2.7	
Argon-quinol	4.0	Neglecting auxiliary heating equipment.
He-Pt	19.3	Neglecting auxiliary heating equipment.

References

1. Cramer, F. D., Rev. Pure and Applied Chem., 5, 143 (1955).
2. Damianovich, H., Soc. Chim. France, Memoires, 1085 (1938).
3. Van der Waals, J. H., Trans. Far. Soc., 52, 184 (1956).

VIII RELIABILITY

Introduction

Since the early fifties, reliability has become an increasingly important factor in the design of large weapon and space flight systems. Reliability engineering is a recognized and distinct discipline and numerous articles regarding the theory and applications of the mathematics of reliability appear regularly in a wide variety of professional journals. The discussion given in this report is offered as an introduction to the procedures which can be used in evaluating the reliability of pressurized gas systems and components. The applications of reliability theory are outlined in the Handbook.

Reliability may be defined as the probability that a device will perform a specific function without failure under given environmental conditions for a given period of time. Probability is a mathematical term referring to the chance of occurrence. Failure means any variation in performance beyond allowable limits, not necessarily total failure. Conditioning environmental factors under which the device must operate are such factors as temperature, vibration, shock, pressure, moisture, etc. Time refers to the life span designed for the device under consideration; it might be fifteen years for a household appliance and thirty minutes for a missile.

Although the causes of unreliability are many, with reference to space vehicles, the primary cause is due to the complexity of the equipment involved. In general, a space vehicle requires that all of its subsystems, components, and parts must operate correctly in order for the flight to be successful. Probability theory determines a vehicle's reliability. The probability of a successful mission is equal to the product of the probabilities that each lesser device within the vehicle will operate successfully. In effect, reliability tends to decrease as the complexity of a device increases.

Space vehicles operate in environmental conditions which are extremely difficult, if not impossible, to simulate in pre-flight testing. Also, when a failure occurs, the exact cause of the failure is impossible to determine in the great majority of instances; it has been reported that the exact cause of missile failures has been identified in less than one percent of the cases.

The human factor as a cause of unreliability should not be ignored. Stanford Research Institute analyzed over 4200 malfunction reports in nine Air Force missile-system test programs and found that some 53 percent of the equipment failures and 23 percent of the unscheduled delays were due to human errors.

A basic rule for obtaining high reliability is to design systems as simply as compatible with the performance requirements. Good design and sub-system engineering work is a prerequisite to high reliability.

In order to build in reliability safety factors, the technique of redundancy through overdesign and alternative component systems is commonly employed. Increasing the redundancy of a system, however, increases the complexity and the weight of the system and therefore limits the utilization of this technique.

A reliability program to be successful must be based upon a well-organized and carefully planned system for collecting, analyzing, and following up reliability data. Lloyd and Lipow[6] present an example of an on-line reliability data reporting system which effectively illustrates the dependence of the reliability program upon the adequacy of the reporting system.

This discussion is not a comprehensive survey of statistical reliability theory. The objective is briefly to mention and illustrate a few techniques in order to make the reader aware of their existence and possible usefulness. (See recommended references list.) Particular caution should be exercised before using any statistical technique in making certain that the technique is applicable. For example, one might make an a priori assumption that an item's time-to-failure

distribution was exponential and proceed to estimate reliability on this basis but a careful analysis of the time-to-failure data would reveal that it is normally distributed.

Reliability Mathematics

The reliability of a device is not an exact physical quantity such as its length; rather, a device's reliability is indicated by probabilistic statements such as "the probability of this mission succeeding is 97 percent."

A generally accepted definition of probability is:

> If an experiment can result in n equally likely, different outcomes, and if m of these outcomes have a property A, then the probability of the event A occuring is

$$P(A) = \frac{m}{n} .$$

For example, if one is interested in the probability of throwing a double (two threes, two fives, etc.) (event A) with a pair of honest dice, there exists a sample space of 36 equally likely, different outcomes of which 6 correspond to event A indicating a $P(A)$ of 1/6.

The principal elementary concepts of probability theory are:

(1) If two events A and B are mutually exclusive events in the sense that they cannot both occur at the same time, then the probability of obtaining outcome A <u>or</u> B is

$$P(A \text{ or } B) = P(A) + P(B)$$

The probability that the first card dealt from a well-shuffled deck is either a two (event A) or a three (event B) would be $P(A) + P(B)$ or 2/13.

(2) If two events A and B are independent events in the sense that the occurrence of A does not affect the occurrence of B, then the probability of obtaining outcome A <u>and</u> B is

$$P(A \text{ and } B) = P(A) \cdot P(B)$$

If event A refers to obtaining a spade and event B to a card value of six, then the probability that the first card dealt is the six of spades would be $P(A) \cdot P(B)$ or 1/52.

(3) If two events A and B are not mutually exclusive events, that is, the occurrence of A does not exclude the possible occurrence of B, then the probability that A <u>or</u> B <u>or both</u> occur is

$$P(A \text{ or } B \text{ or both}) = P(A) + P(B) - P(A).P(B)$$

If event A represents obtaining a spade and event B a card value of a two or a three, then the probability that the first card dealt is a spade or a two or a three would be $P(A) + P(B) - P(A).P(B)$ or $1/4 + 2/13 - (1/4)(2/13)$ or 19/52.

(4) It is frequently necessary to compute the probability that an event A will occur, given that an event B <u>has</u> occurred. This is called the conditional probability of A given B and is denoted by $P(A/B)$.

Assume one throws two dice, X and Y, and is told that the sum of the dots on X and Y is less than four. What is the probability that die X has only one dot?

The entire sample space S consists of 36 possible outcomes with some outcomes producing a sum less than four.

Ignoring those outcomes of four or more, a new sample space S remains consisting of three sample points (X=1,Y=1), (X=1,Y=2) with an equal 1/3 probability of occurring. Since two of these points represent the event that dice $X = 1$, the probability that $X = 1$ is 2/3 given that $X + Y < 4$. This is called the conditional probability that $X = 1$ given that $X + Y < 4$.

Alternatively, referring to the original sample space S and letting event A represent the number of outcomes with $X = 1$, there are six possible outcomes (1,L), (1,2), (1,3), (1,4), (1,5), (1,6). If event B represents all outcomes with $X + Y < 4$, there are three possibilities (1,) (1,2) (2,1). P(A) is therefore 6/36, P(B) is 3/36 and $P(A \cap B)$ is 2/36, when the term $A \cap B$ refers to the number of outcomes

in A and B that are identical. As stated, the usual notation for the probability of A given B is $P(A|B)$ and $P(A|B)$ is defined by the equation:

$$P(A|B) = \frac{P(A \cap B)}{P(B)} \quad \text{or} \quad \frac{\frac{2}{36}}{\frac{3}{36}} \quad \text{or} \quad 2/3 \quad .$$

As a further example, if event A represents a spade and event B a card with a value of seven, what is the probability that the first card dealt is a seven given the information that it is a spade?

$$P(B|A) = \frac{P(B \cap A)}{P(A)} = 1/52 \div 13/52 = 1/13$$

As mentioned $A \cap B$ refers to the number of sample outcomes common to events A and B, and the event $A \cap B$ is called the intersection of events A and B or the event that both A and B occur. $A \cup B$ refers to the union of events A and B or the event A or B or both occur.

Frequencly, in reliability work, the probability of an event A, conditioned on the occurrence of several mutually exclusive events, is known and the problem is to find the unconditional probability of A. For example, the event A might stand for the success of a space mission with the events B , B , and B representing a set of mutually exclusive events comprising a sample space S.

Then

$$\begin{aligned} B_1 \cup B_2 \cup B_3 &= S \text{ and} \\ A &= A \cap S \\ &= A \cap (B_1 \cup B_2 \cup B_3) \\ &= (A \cap B_1) \cup (A \cap B_2) \cup (A \cap B_3) \end{aligned}$$

and since $(A \cap B_1)$...are all mutually exclusive events

$$P(A) = \sum_i P(A \cap B_i) = \sum_i P(A \mid B_i) \cdot P(B_i)$$

For example, a space vehicle has as its objective a landing on the moon (event B_1) and if it does affect a lunar landing it may transmit radiation data (event A_1). The vehicle may malfunction, however, and go into

orbit around the earth (B_2) but in so doing could transmit radiation data regarding the Van Allen belts (A_2); it also may never leave the pad (B_3). If the occurrence of A_1 or A_2 constitutes a success, what is the probability for a successful mission?

$$P(A_1 \cup A_2) = \sum_{ij} P(A_i \cap B_j)$$

$$= P \quad [(A_1 \cap B_1) + (A_1 \cap B_2) + (A_1 \cap B_3)$$

$$+ (A_2 \cap B_1) + (A_2 \cap B_2) + (A_2 \cap B_3)]$$

However events $(A_1 \cap B_2)$, $(A_1 \cap B_3)$ $(A_2 \cap B_1)$, and $(A_2 \cap B_3)$ are intersection F mutually exclusive events and represent impossible outcomes, i.e., cannot occur. Therefore

$$P(A_1 \cup A_2) = P(A_1 \cap B_1) + P(A_2 \cap B_2)$$

$$= P(A_1 \mid B_1) \quad . \quad P(B_1) + P(A_2 \mid B_2), P(B_2)$$

and if $P(A_1 \mid B_1) = .8$; $P(B_1) = 0.7$; $P(A_2 \mid B_2) = .95$, and

$$P(B_2) = .25$$

then $P(A_1 \cap A_2) = (0.8)\ (\ ).7) +)0.95)\ (0.25)$

$$= 0.7975$$

<u>Tolerance Limits for Finite Numbers of Samples Following the Normal Distribution</u>

Whenever parameters, such as permeability rates, are experimentally determined, it is preferable for design and relaibility evaluation to specify tolerance limits such that a certain percentage of future measurements may be expected to fall between the limits. Experience has shown that the majority of experimental data are approximately normally distributed; moreover, moderate departures from normality do not seriously affect the tolerance limits computed on the basis of a normal distribution. Assuming normality, if the true mean and standard deviation of the population were known, tolerance limits would be formed by adding to and subtracting from the mean a certain multiple K of the standard deviation. For example, if the mean μ and standard

deviation of the population σ are known, then the limits $\mu \pm 1.6456\ \sigma$ will include 90 percent of the distribution of the mean. However, the same assertion cannot be made about the limits $\overline{K} \pm 1.6456 \cdot S$ where $\overline{K}$ is the mean and S is the standard deviation of a sample of N observations. In fact, if K is fixed, no two samples from a given population will yield identical tolerance limits as both the sample means and standard deviations will vary from sample to sample. Therefore, the proportion of the population that is included between the limits $\overline{K} \pm K \cdot S$ is a random variable and it is impossible to determine K so that the limits will always contain a specific proportion of the population. It is, however, possible to determine K so that a certain proportion γ (called the confidence coefficient) of the tolerance limits $\overline{X} \pm K \cdot S$ will contain a fixed percentage of the population P.

Table VIII-1 presents values of K associated with a specified confidence coefficient γ, sample size N, and population proportion P assuming a normal distribution. As an example of the use of the table in computing tolerance limits consider the results of five experiments to determine the nitric acid content of a sample:

Experiment		Nitric Acid
1		41.03
2		39.61
3		39.61
4		40.03
5		39.54
	SUM	200.14

The mean of these data is 200.14/5 or 40.02 and the standard deviation is given by

$$S = \left[\sum_{i=1}^{N} (X_i - \overline{X})^2/(N-1)\right]^{1/2}$$

$$= \left[(1.01)^2 + (0.41)^2 + (0.11)^2 + (0.48)^2/4\right]^{1/2}$$

$$= (0.357)^{1/2}$$

$$= 0.60$$

It is desired to compute with a confidence coefficient γ of 95 percent tolerance limits within which P = 90 percent of future nitric acid determinations will lie. Entering Table VIII-1 at a P value of 90 percent and a γ value of 95, K for a sample size of 5 is equal to 4.275 and the limits ($X \pm K \cdot S$) are

$$40.02 \pm 4.275(0.60)$$

Therefore it can be stated with a confidence of 95 percent that 90 percent of all future observations on 5 samples analyzed concurrently will lie between 37.46 and 42.58. If one wished to be 99 percent confident that the limits would contain 90 percent of all future observations, a K value of 6.612 is obtained from the table and the tolerance limits are then 36.05 and 43.99. Confidence limits $\gamma = 0.95$ or 0.99 are most frequently used in practice.

It is occasionally appropriate to specify a single tolerance limit $\overline{X} - K \cdot S$ such that a fixed proportion of the population lies above this limit, or a limit $\overline{X} + K \cdot S$ such that a fixed proportion lies below the limit. These single limits are called one-sided tolerance limits. (See Bowker and Lieberman (Ref. 3, p. 230-1) for a table of K values to use in computing one-sided tolerance limits).

Table VIII-1

TOLERANCE FACTORS FOR NORMAL DISTRIBUTION

Factors K such that the probability is γ that at least the proportion P of the distribution lies between the interval $\overline{X}$ Ks, where X and s are the mean and standard deviation computed from a sample of size N.

	$\gamma = 0.90$				$\gamma = 0.95$				$\gamma = 0.99$			
M \ P	0.75	0.90	0.95	0.99	0.75	0.90	0.95	0.99	0.75	0.90	0.95	0.99
2	11.407	15.978	18.800	24.167	22.858	32.019	37.674	48.430	114.363	160.193	188.191	242.300
3	4.132	5.847	6.919	8.971	5.922	8.380	9.916	12.861	13.378	18.930	22.401	29.055
4	2.932	4.166	4.943	6.440	3.779	5.369	6.370	8.299	6.614	9.398	11.150	14.527
5	2.454	3.949	1.152	5.423	3.002	4.275	5.079	6.634	4.643	6.612	7.855	10.260
6	2.196	3.131	3.723	4.870	2.604	3.712	4.414	5.775	3.743	5.337	6.345	8.301
7	2.034	2.902	3.452	4.521	2.361	3.369	4.007	5.248	3.233	4.613	5.488	7.187
8	1.921	2.743	3.264	4.278	2.197	3.136	3.732	4.691	2.905	4.147	4.936	6.468
9	1.839	2.626	3.125	4.098	2.078	2.967	3.532	4.631	2.677	3.822	4.550	5.968
10	1.775	2.535	3.018	3.959	1.987	2.839	3.379	4.433	2.508	3.582	4.265	5.594
11	1.724	2.463	2.933	3.849	1.916	2.737	3.259	3.259	4.277	2.378	4.045	5.308
12	1.683	2.404	2.863	3.758	1.858	2.655	3.162	4.150	2.274	3.250	3.870	5.079
13	1.648	2.355	2.805	3.682	1.810	2.587	3.081	4.044	2.190	3.130	3.727	4.893
14	1.619	2.314	2.756	3.618	1.770	2.529	3.012	3.955	2.120	3.029	3.608	4.737
15	1.594	2.278	2.713	3.562	1.735	2.480	2.954	3.878	2.060	2.945	3.507	4.605
16	1.572	2.246	2.676	3.514	1.705	2.437	2.903	3.812	2.009	2.872	3.421	4.492
17	1.552	2.219	2.643	3.471	1.679	2.400	2.858	3.754	1.965	2.808	3.345	4.393
18	1.535	2.194	2.614	3.433	1.655	2.366	2.819	3.702	1.926	2.753	3.279	4.307
19	1.520	2.172	2.588	3.399	1.635	2.337	2.784	3.656	1.891	2.703	3.221	4.230
20	1.506	2.152	2.564	3.368	1.616	2.310	2.752	3.615	1.860	2.659	3.168	4.161
21	1.493	2.135	2.543	3.340	1.599	2.286	2.723	3.577	1.833	2.620	3.121	4.100
22	1.842	2.118	2.524	3.315	1.584	2.264	2.697	3.543	1.808	2.584	3.078	4.044
23	1.471	2.103	2.506	3.292	1.570	2.244	2.673	3.512	1.785	2.551	3.040	3.993
24	1.462	2.089	2.489	3.270	1.557	2.225	2.651	3.483	1.764	2.522	3.004	3.947
25	1.453	2.077	2.474	3.251	1.545	2.208	2.631	3.457	1.745	2.494	2.972	3.904
28	1.453	2.077	2.474	3.251	1.545	2.208	2.631	3.457	1.745	2.949	2.972	3.904
30	1.417	2.025	2.413	3.170	1.497	2.140	2.549	3.350	1.668	2.385	2.841	3.733
32	1.405	2.009	2.393	3.145	1.481	2.118	2.524	3.315	1.644	2.351	2.801	3.680
34	1.395	1.994	2.376	3.122	1.468	2.099	2.501	3.286	1.623	2.320	2.764	3.632
36	1.386	1.981	2.361	3.102	1.455	2.081	2.479	3.258	1.604	2.293	2.732	3.590
38	1.377	1.969	2.346	3.083	1.446	2.068	2.464	3.237	1.587	2.269	2.703	3.552
40	1.370	1.959	2.334	3.066	1.435	2.052	2.445	3.213	1.571	2.247	2.677	3.518
45	1.354	1.935	2.306	3.030	1.414	2.021	2.408	3.165	1.539	2.200	2.621	3.444
50	1.340	1.916	2.284	3.001	1.396	1.996	2.379	3.126	1.512	2.162	2.576	3.385

* K values taken from Eisenhart, Hastay, and Wallis, "Techniques of Statistical Analysis," McGraw-Hill Book Co., Inc. 1947.

REFERENCES

1. Anon., "A Manual of Reliability," Product Eng., May 16, 1960.
2. Bennett, Carl A., and Franklin, N. L., "Statistical Analysis in Chemistry and the Chemical Industry," John Wiley and Sons, Inc., 1954.
3. Bowker, A. H., and Lieberman, G. J., "Engineering Statistics," Prentice-Hall, Inc., 1959.
4. Dull, Raymond W., and Dull, Richard, "Mathematics for Engineers," McGraw-Hill, 1951.
5. Feller, W., "An Introduction to Probability Theory and Its Applications," John Wiley and Sons, Inc., 1957.
6. Lloyd, David K., and Lipow, M., "Reliability: Management, Methods, and Mathematics," Prentice-Hall, Inc., 1962.
7. Lusser, Robert, "Reliability of Guided Missiles, AD-44 456, 1954.
8. Mood, A. M., "Introduction to the Theory of Statistics," McGraw-Hill, 1950.
9. Morrison, S. C., "Maximizing Reliability," Aerospace Eng., March, 1962.
10. Mosteller, Rourke, and Thomas, "Probability and Statistics," Addison-Wesley Publishing Co., Inc., 1961.
11. Mood, A. M., "Introduction to the Theory of Statistics," McGraw-Hill, 1950.
12. Wald, Abraham, "Sequential Analysis," John Wiley and Sons, Inc., 1947.

IX ATTITUDE CONTROL

Introduction

This section outlines the applications of attitude control in space flight. The attitude of a satellite means the instantaneous direction in inertial space of three mutually orthogonal axes fixed in the body (usually in the scientific instruments) of the satellite.

The first two parts of this section explain the need for attitude control, and the next several parts describe (in both concrete and idealized form) systems designed to accomplish control. The models introduced involve problems of a mathematical nature. These problems are set out in considerable detail in the final two parts of this section, which are designed to lead workers in the field to the analytical techniques they need. Indeed, the theory of control of nonlinear systems has flowered only recently; many references are in foreign languages, or in journals not often read by engineers. A guide to the literature is included.

A control system is one which generates restoring torques (as with gas jets) to correct deviations from a desired attitude. A stabilization system is one which resists change (as with initial spin) but which is not necessarily active.

The Object of Attitude Control in a Satellite, Probe, or Rocket

A satellite is launched and injected into orbit to carry out a scientific or military task. It must photograph the earth or its cloud cover; observe the sun or stars; relay messages; count micrometeoroid impacts. For most of these applications, the attitude of the satellite's body must be directed. In certain cases, the satellite may be jointed, and the attitude of certain parts is critical.

To observe the earth or make photographs of stars, the need for attitude control is clear. But more than this, the object must be in the center of the camera's field, and finally the command post must know

that the desired attitude is held at the proper time. Also, booms and protuberances must not obstruct the camera.

To achieve successful injection into orbit, the thrust axis must be controlled during launch; to descend from orbit, the retro-rocket thrust vector must be correctly oriented. Both operations require accurate attitude control. Incremental thrusts to alter an existing orbit involve similar requirements.

Some satellites have an articulated boom carrying an antenna which must be pointed to a ground (in the future, a space) command station to receive commands and transmit messages. In other active repeating (relay) satellites, the antenna system is fixed in the satellite, and the entire body must be oriented.

When power is derived from solar cells, they must receive full sunlight. This is again a requirement on the attitude of either a working part, or the entire structure.

The Perturbing Influences

Minute disturbances can cause a satellite to wander from a preset attitude, or from a predetermined orbit. The difficulty is that such disturbances may persist for a long time, and the integrated effect can be substantial.

Apart from this, some missions require a continuous control of attitude. Unless a satellite is precisely in a circular orbit, the angular velocity around the orbit is not constant, and without a control system, the satellite cannot be pointed perpetually at the center of the earth. In fact, no non-equatorial orbit of an earth satellite can be precisely circular. The inaccuracy caused by (nearly) elliptic orbits in this last regard is shown in Table I. In this table it is assumed that the rate of rotation of a satellite about its axis is uniform, and this rate is supposed to be so adjusted that the attitude error is zero at the three anomalies $-\theta_0$, 0, θ_0; E is the eccentricity of the orbit. The attitude error will have a relative maximum at the value θ, the value of this maximum being shown in the last column of the table. The position

of the relative maximum varies, but in the cases tabulated occurs at approximately $\theta = 0.6\ \theta_0$.

When θ_0 is less than 3.14 radians, Table I shows how accurately a constant angular rate can point a satellite at the earth for one part of a single orbit. The entries in the last column corresponding to $\theta_0 = 3.14$ gives absolute errors, and the tabulated errors are good for several orbits.

Table IX-I

ERRORS IN ATTITUDE FOR AN EARTH SURVEILLANCE SATELLITE ROTATING AT CONSTANT ANGULAR VELOCITY ABOUT ITS AXIS

θ_0	E	θ	max. error
.35 rad	.005	.20 rad	.09 minutes of arc
	.010		.18
	.020		.37
	.050	.20	.89
1.05	.005	.60	2.34
	.010		4.67
	.020		9.28
	.050	.60	22.70
2.09	.005	1.15	15.0
	.010		30.0
	.020		59.9
	.050	1.16	148.7
3.14 (full orbit)	.005	1.57	34.4
	.010		68.8
	.020		137.5
	.050	1.61	343.9

The results of Table I hold good independent of the orbit size. The table shows that if the angular rate of rotation and attitude could both be precisely adjusted at the moment a satellite is 20° away from the perigee of its orbit, the satellite would continue to face the

center of the earth quite accurately on the way to perigee and 20 degrees beyond. The maximum error in this case would be less than a minute of arc even for an orbit with perigee and apogee distances as disparate as 200 and 600 miles.

An attitude control system must certainly overcome initial errors in alignment, and cancel any unwanted angular momentum of the satellite. Besides this, there are requirements imposed by the changing direction of the target, sun, or command post in space. Finally there are torques introduced by the influences listed in Table IX-II. Some of these have been discussed at length in the indicated references.

Table IX-II

THE CHIEF PERSISTENT DISTURBANCES

	Disturbance	References
1.	Changing direction of the target in space	See page IX-32 on the theory of control and references cited there.
2.	Nonuniform rate of orbital revolution	This part, perturbing influences
3.	Oblateness of the earth (perturbs the orbit)	[8] , [31] , [51]
4.	Gravitational torques (induced by the gradient in a gravitational field)	[40] , [47]
5.	Lunisolar perturbations on the orbit	[54]
6.	Magnetic torque induced on a conducting satellite	[48] , [49] , [89]
7.	Torque induced by radiation pressure effect on the orbit	[10] , [29] , [52] , [53]
8.	Aerodynamic forces (drag); effect on orbit	[15] , [32]
9.	Particle impact	
10.	Change of mass distribution	

Devices for Sensing Attitude

To adjust its attitude, a satellite needs to sense its deviation from the correct attitude. Horizon scanners and earth and sun finders are suitable sensing devices. The latter are effective at great distances, and depend on infra-red radiation. The former should be sensitive to blue and green light as well.

For short times, gyros have been used. An unusual proposal is a device built around a cryogenic gyroscope, which is supported by a high intensity magnetic field. A field of the requisite intensity might be expensive to produce, especially in a small space. The cooling equipment would use power.

Another proposal involves the use of star finders. Comparators would identify constellations of stars by correlating the observed patterns with patterns stored in a memory. Accelerometers have been mentioned as sensing devices.

General descriptions of these sensing devices are included in [27], which has pictures of a tracking sextant and a cryogenic gyro.

Table IX-III

ATTITUDE SENSORS

Device	Use	Remarks
Horizon sensor	Reconnaissance	Infra-red and Optical Wavelengths
Earth sensor	Probes	Infra-red
Sun sensor	"	
Moon sensor	Lunar Probe	Must define center of the disk being sought
Planet sensor	Planet Probe (chiefly)	
Gyro	Short-term memory	Drifts
Accelerometer		Requires integrator

Table IX-III (continued)

Device	Use	Remarks
Iron trap		"?"
Cryogenic gyro	Proposed	Long-lived, but requires cooling device and high magnetic field.

Required Tolerances in Attitude

The requirements for stability in attitude range from the accuracy needed in the case of Orbiting Astronomical-Astrophysical Observatory (OAO) (a fraction of 1 inch, 0.0002 deg) to complete freedom of orientation for the Echo satellites. Tolerances can be stated either as allowable error in the required orientation, or as allowable angular error and angular rate error. Table IX-IV gives estimates or guesses of these tolerances, with reference to pertinent unclassified sources.

Table IX-IV

ALLOWABLE TOLERANCE IN ATTITUDE FOR VARIOUS SATELLITES, MISSIONS, AND FUNCTIONS

Satellite name, part, or function	Allowable Tolerance in attitude	Reference
Echo-passive reflector	infinite	
Battery of solar cells	With attitude error of 25 degrees, will receive 90% of maximum possible irradiance	
Tiros wide-angle pictures, assuming orbital altitude is 400 miles, and allowable error for center of picture due to error in attitude is 120 mi.	19 degrees	
Satellite temperature control	10 degrees average	[74, p. 26]

Table IX-IV (continued)

Satellite name, part, or function	Allowable Tolerance in attitude	Reference
Tiros telephoto pictures, assuming orbital altitude is 400 miles, and allowable error for center of picture due to error in attitude is 30 mi.	5 degrees	
Telstar communication satellite (active repeater)		
Ranger antenna	Average (RMS) error 2 degrees	[74, p. 26]
Mercury retrorockets		
Ranger midcourse maneuver	0.25 deg	[74, p. 26]
Celescope	15" for one min. of time	[17, p. 47]
OAO	fraction of 1"	proposed scientific satellite

Systems and Components in Use for Attitude Control

Sirri [74] separates attitude control techniques into three classes: mass expulsion, momentum interchange, and solar pressure; he gives typical torques for several devices. More than one technique can be used in a single system. The tables below catalog a few systems.

Table IX-V

ATTITUDE CONTROL SYSTEMS IN USE

Type of System	Application	Reference
Compressed air (cold gas)	Juno I	
	Juno II	[26]

Table IX-V (continued)

Type of System	Application	Reference
Compressed nitrogen	Mercury; Discoverer; Tiros	[26]
Hydrogen peroxide	Scout; Roll control of early Jupiter missiles	
Electric current in a magnetic field	Tiros	[1]
Gradient of a gravitational field	the Moon	Classical
Rockets	Spin and Despin	
Release of weight through a spiral trajectory (yo-yo)	Despin	[15a]

Table IX-VI

ATTITUDE CONTROL SYSTEMS PROPOSED

System of method	Proposed Application	Reference
Solid matter expulsion (Bullets)		[26]
Steam (vaporized by solar (energy)		[28]
Chemical Fuel		[23]
IRFNA and UDMH		[71]
Reaction wheel with momentum reset device (solid propellant)	for satellite above 5000 lb.	[26]
Reaction sphere with momentum reset device	for satellite up to 5000 lb.	[25a] , [26]
Dynamic unbalancing of a system of masses		[55]
Tapering thrust jet	to provide damping	[23]
Solar radiation (pressure on vanes)		[23a]

Table IX-VI (continued)

System or method	Proposed Application	Reference
Cesium ion jet		[10a], [18a]
Plasma jet		[10a], [11]
Photon jet		[11]

The Components of an Attitude Control System

(1) Logical Structure

The logical components of an attitude control system are indicated in the subjoined block diagram (Fig. 5). The memory can be mechanical, or can reside in a human brain. The controller can also be human; in an automatic system the controller and memory are separate mechanical components.

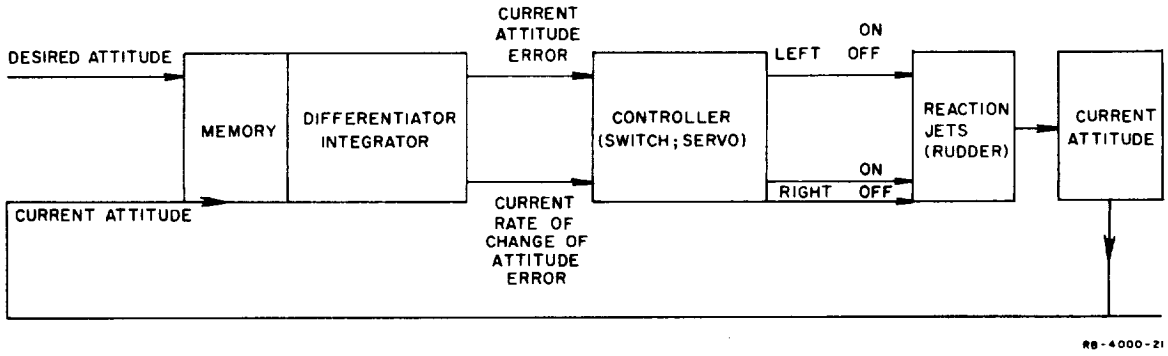

FIG. IX-1 BLOCK DIAGRAM OF AN ATTITUDE CONTROL SYSTEM

This diagram would be even more realistic if a time delay were included in the operation of the differentiator and of the controller. The magnitude of these delays is approximately constant in each system; see page IX-11.

(2) Hardware Design

Hardware implementation of the block diagram of Figure 5 depends on the gases being used. For a cold gas system, the implementation might be that of Figure 6.

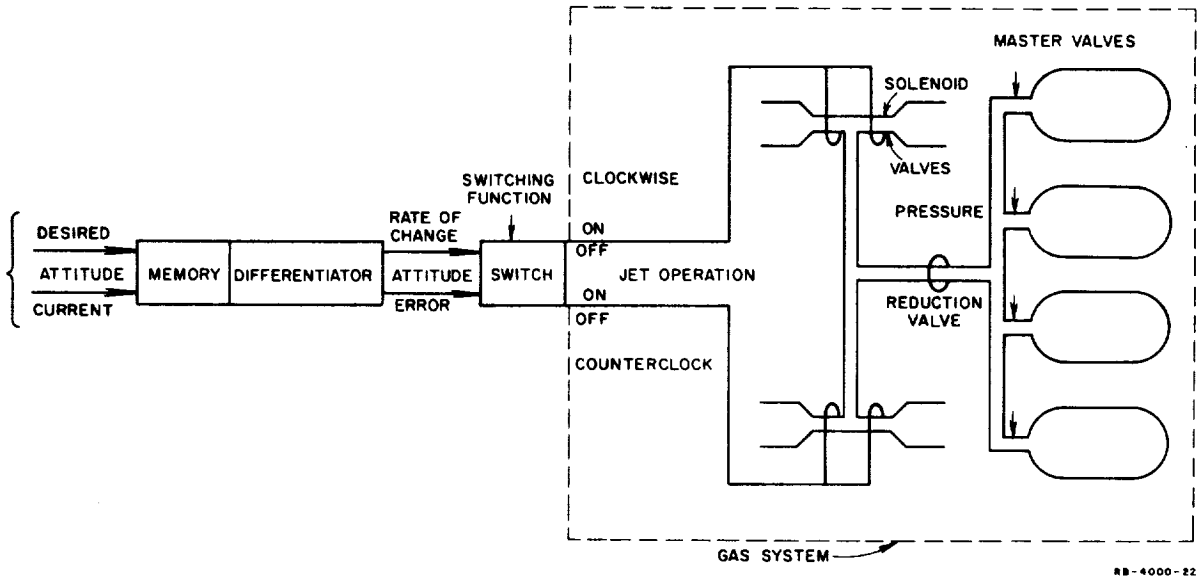

FIG. IX-2 COLD GAS SYSTEM HARDWARE IMPLEMENTATION

For a hot gas system, the components include a bladder to hold the fuel (usually hydrogen peroxide), an arming system of cold gas (nitrogen), safety vents, and a catalyst. See Figure 7, which represents the gas system used in the second and third stages of the Scout rocket.

The gas system proposed for hydrazine in [81] is shown in Figure 8. For special applications in which it is allowable to waste a large fraction of the hot gases, i.e., one-shot applications, the system pictured in Figure 9 is proposed. This system uses an entire grain of solid propellant.

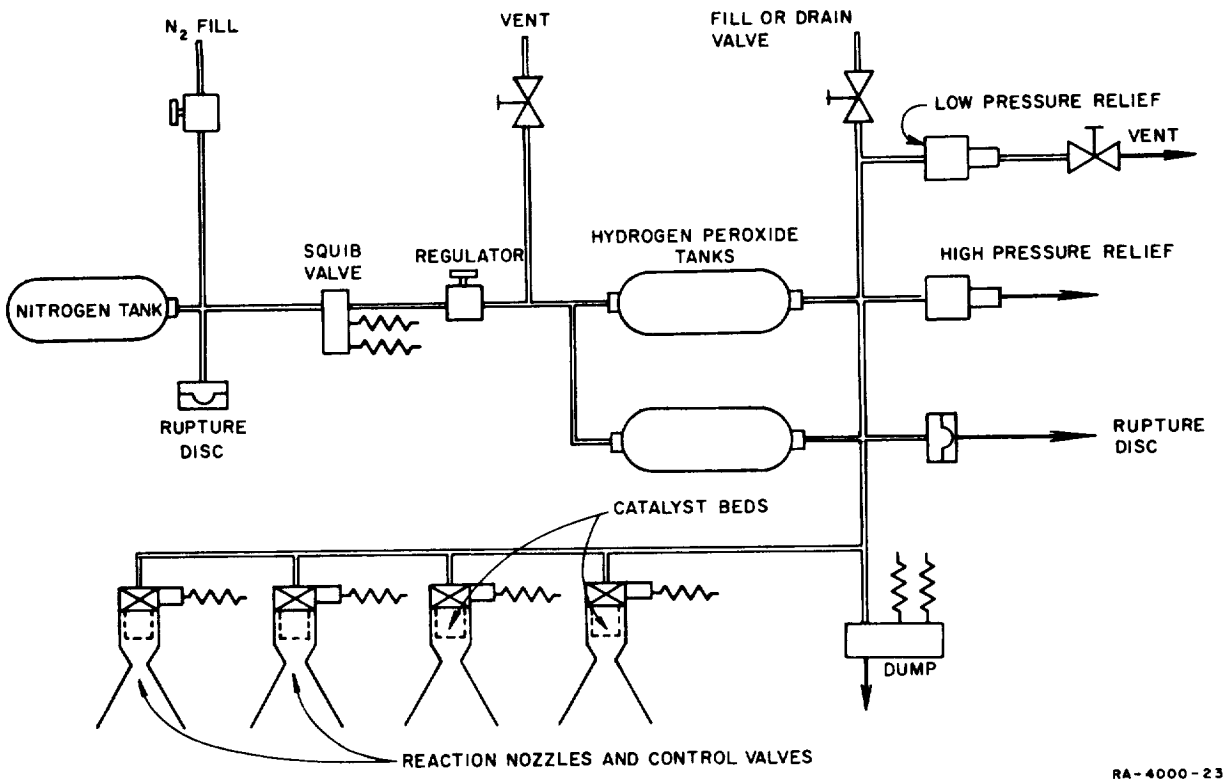

FIG. IX-3 ATTITUDE CONTROL SYSTEM SIMILAR TO THAT USED FOR SCOUT

(3) Delay Times; Response Times

The time delay in the first part of the feed-back loop of Figure 5 is very small compared to the time required for the valves to open and allow the working fluid (gas) to flow from storage to the nozzles, producing thrust. Typical times and peak thrusts are given in Table IX-7.

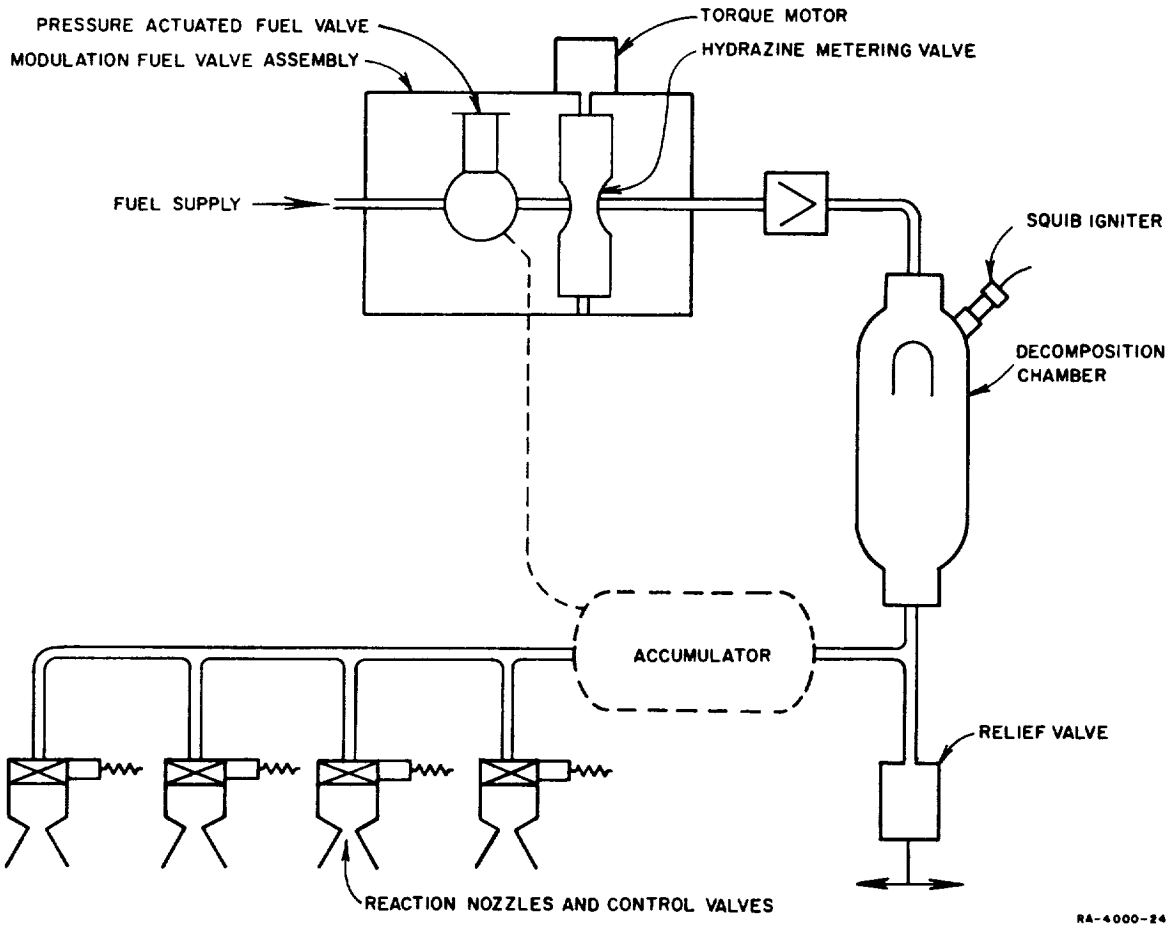

FIG. IX-4 TYPICAL ATTITUDE CONTROL SYSTEM USING HYDRAZINE

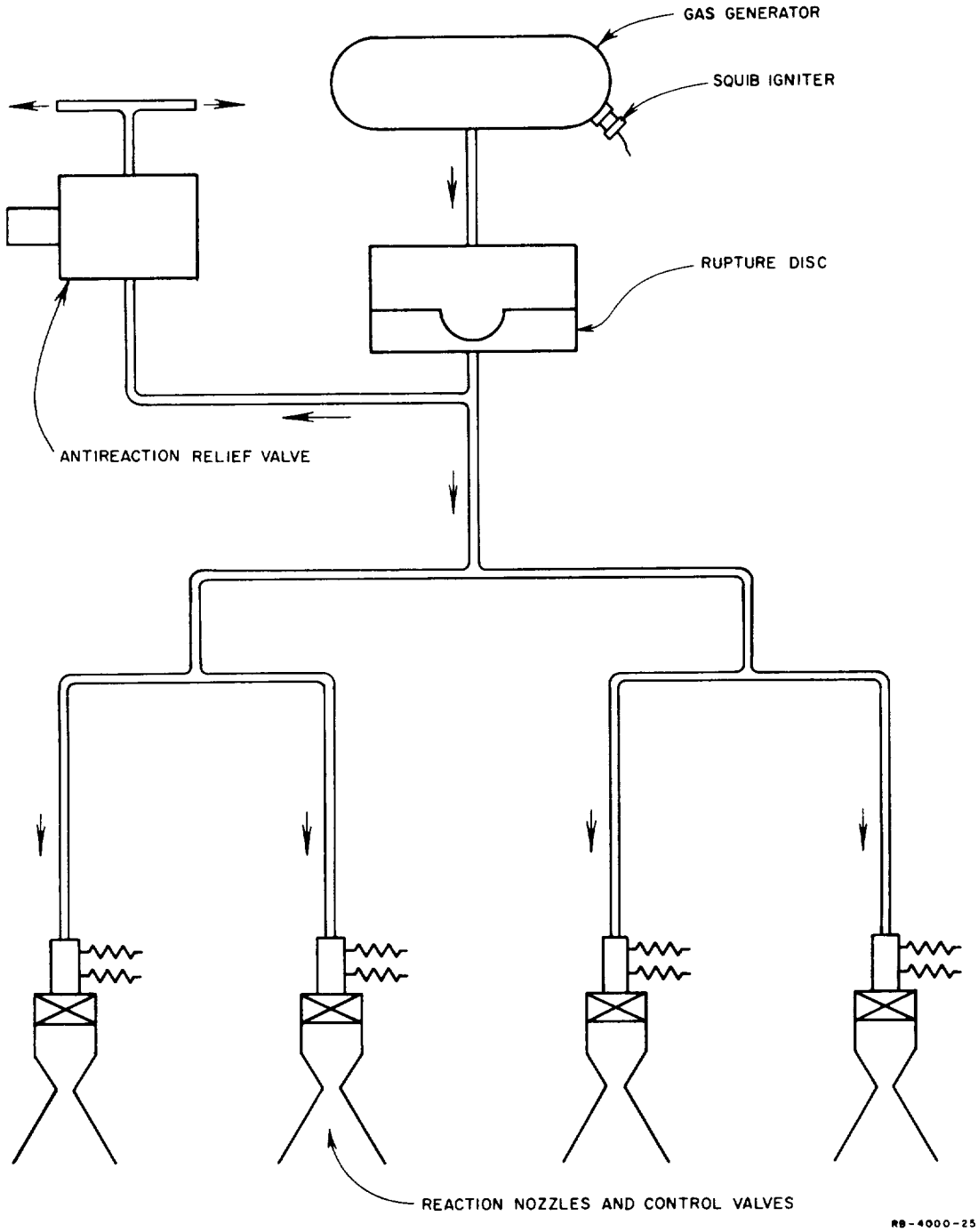

FIG. IX-5 ATTITUDE CONTROL SYSTEM USING SOLID PROPELLANT

Table IX-7

TIME DELAYS IN GAS ATTITUDE-CONTROL SYSTEMS

System Type	Thrust per jet	Time Delay	Source
Cold gas-high thrust jet	20 lb.	5-10 milliseconds	[81]
Cold gas-low thrust jet	5	less	[81]
Hot gas-Hydrogen peroxide (high thrust)	44	no thrust for 48 msec; then decreasing substantially, and returning to full thrust 108 msec. after valves were activated.	[81]

(4) Description of Operation

The operation of the idealized control system of Figure 5 is as follows. There are three sets of controls, one for each axis (pitch, yaw, roll). In each of the three controls, the desired attitude is either set in a gyro before flight, acquired by a sensing device, or telemetered from an outboard master control. This desired attitude may be constant, or may vary according to a preset program. In the latter case, the desired attitude may require a combination of a memory device and a timed cam-operated read-off mechanism.

The current attitude signal is fed back to a synthesizer which computes attitude error θ. Usually the attitude error is differentiated to give rate of change of attitude $\dot{\theta}$. Finally, the signal $\theta + K\dot{\theta}$ is relayed to a switch. (K is a positive number, typically 0.1 sec.) If this signal exceeds a threshold value $\pm \epsilon$, it activates a switch for right (if positive) or left (if negative) rudder.

In this case a "rudder" is a pair of reaction jets which produces a torque. Activation of the right rudder switch automatically inactivates the left rudder switch, and vice versa. However, complications can occur

because of delayed response on the one hand, and difference between the pull-in- and release-voltage (both nominally + ϵ) on the other hand. These complications can even cause the switch to chatter.

The general nature of the hydrogen peroxide and hydrazine fuel systems is explained in the diagrams themselves (Figs. 7, 8).

The number of on-off cycles contemplated has some influence on the choice of the fuel. Because of its high reliability, a cold gas system has been preferred when the expected number of on-off cycles is large (> 1000). A hydrogen peroxide has operated successfully, and the catalytic restart is reliable. Hydrazine is said to be limited by poisoning of the catalyst.

Motion of a Rigid Body in Space

(1) Generalities

A rigid body is defined as a collection of masses which have fixed relative distances for the period during which the collection is studied. Most small forces in the space environment do not bend or twist a rocket case or satellite, which therefore remains rigid under their influence. The control and propulsion devices themselves exert comparatively large forces however, and the assumption that these forces are acting on a rigid body is not necessarily justified, especially when very close tolerances in attitude are involved.

Rutherford [70] contains a succinct outline of this classical field. There is a full account in Whittaker's book [87]. Chapters 4 and 5 of Goldstine's book [25] are readable expositions written with the notation and point of view of a physicist.

A rigid body has 6 degrees of freedom, and thus six equations are needed to describe its motion. Suppose the magnitudes of the individual masses which make up the rigid body are $m_1, m_2, \cdots$, and that the i-th mass has coordinates $\underset{\rightarrow}{r}_i$. The equations of motion are

$$\underset{\rightarrow}{F} = \dot{\underset{\rightarrow}{p}}, \quad \underset{\rightarrow}{G}_o = \frac{d}{dt}(\underset{\rightarrow}{h}_o), \tag{1}$$

where $\underset{\rightarrow}{F}$ is the vector sum of the external forces,

$$\underset{\rightarrow}{p} = \Sigma m_i \dot{\underset{\rightarrow}{r}}_i ,$$

$$\underset{\rightarrow}{G} = \Sigma \underset{\rightarrow}{r}_i \times \underset{\rightarrow}{F}_i , \quad \underset{\rightarrow}{F}_i \text{ being the external force on the i-th mass,}$$

$$\underset{\rightarrow}{h} = \Sigma m_i \underset{\rightarrow}{r}_i \times \dot{\underset{\rightarrow}{r}}_i .$$

From equations (1) the more usual equations involving moments and products of inertia follow (see page IX-21 of this section).

In the above relations, the numbers m_i are <u>inertial masses</u>. They can be used to define a <u>center of</u> (inertial) <u>mass</u>. If a rigid body is spherically symmetric and moves in a gravitational field, the net force on the body is the same as it would be if all the body's mass were concentrated at its center. For bodies which are not perfectly symmetric, there may be a <u>center of gravity</u>, that is a point at which the total concentrated mass would produce the correct net force. A center of gravity need not exist in all cases, and when it does exist, it need not coincide with the center of mass.

If a rigid body has a unique axis of symmetry--if it is a solid of revolution but is not spherically symmetric--the center of mass lies on this axis. Moreover, the axis is one of the principal axes of inertia, and the body's moment of inertia about this axis is either greater than, or less than, the moment of inertia about any other axis through the center of mass.

Since equations (1) separate into two sets of three each, there are two problems: the motion of the center of mass, and the motion of the body relative to its center of mass (but see [50]). The former is discussed in (2), the latter in subsequent parts of this section.

(2) <u>Equations of Motion of a Point Mass in the Gravitational Field of the Earth</u>. The earth is an oblate body, and the potential V of the earth's gravitational field is neither central nor inverse square. The differential equations governing the motion of a point mass (satellite in orbit) in this gravitational field are

$$\ddot{r} - r\,\dot{\theta}^2 - r\sin^2\theta\,\dot{\phi}^2 = -\frac{\partial V}{\partial r}$$

$$\frac{d}{dt}(r^2\dot{\theta}) - r^2\sin\theta\cos\theta\,\dot{\phi}^2 = -\frac{\partial V}{\partial \theta} \qquad (2)$$

$$\frac{d}{dt}(r^2\sin^2\theta\,\dot{\phi}) = -\frac{\partial V}{\partial \phi}.$$

In these equations, r, θ, ϕ are spherical coordinates referred to the center and polar axis of the earth. If the earth's mass has an axis of symmetry (on this point, see [54a]), the gravitational potential V in the equations has the form

$$V = -\frac{g_1 R^2}{r}\left[1 + J_2\frac{R^2}{r^2}\left(\frac{1}{2} - \frac{3}{2}\cos^2\theta\right) - J_3\frac{R^3}{r^3}\left(\frac{5}{2}\cos^3\theta - \frac{3}{2}\cos\theta\right)\right. \qquad (3)$$

$$- J_4\frac{R^4}{r^4}\left(\frac{35}{8}\cos^4\theta - \frac{15}{4}\cos^2\theta + \frac{3}{8}\right)$$

$$- J_5\frac{R^5}{r^5}\left(\frac{63}{8}\cos^5\theta - \frac{35}{4}\cos^3\theta + \frac{15}{8}\cos\theta\right)$$

$$\left. - J_6\frac{R^6}{r^6}\left(\frac{231}{16}\cos^6\theta - \frac{315}{16}\cos^4\theta + \frac{105}{16}\cos^2\theta - \frac{5}{16}\right) + \cdots\right]$$

The numerical coefficients have the following approximate values

$R = 6378.1$ km*

$g_1 = 979.82$ cm.sec^{-2}**

$J_2 = 1082.8\cdot 10^{-6}$ [33]

$J_3 = -2.4\cdot 10^{-6}$ [12], [58]

$J_4 = -1.4\cdot 10^{-6}$ [33]

$J_5 = -0.1\cdot 10^{-6}$ [58]

$J_6 - 0.9\cdot 10^{-6}$ [33]

A near-earth satellite moves in an orbit which is approximately elliptical, with the center of the earth at one focus. The plane of the ellipse turns (regresses), though not at a uniform rate; the position of perigee in the orbit moves so that even in the regressing plane, the

---

* Equatorial radius of the earth

** Acceleration of gravity at the equator, corrected for centrifugal force, is $g_1\left[1 + \frac{3}{2}J_2 - \frac{15}{3}J_4\right]$

orbit is a rosette. No non-equatorial orbit is a perfect circle. There is a polar orbit that is nearly circular, but slightly flattened at both poles.

An actual satellite is not a point mass moving in the gravitational field of the earth, but an extended body. The behavior of the body can be approximated by replacing it by a pair of point masses (a dumbbell). The gravitational field induces oscillation or rotation of the dumbbell. For some dumbbell shapes, the oscillation can resonate with the orbital motion. See [50, 78].

Influence of the gravitational fields of the sun and moon have been studied [35]; resonance can occur there too. The magnetic field of the earth influences the oscillations of a conducting satellite; see [80], [83], [84].

(3) Equations of Response

The attitude angle θ is determined (as a function of the time t) from a physical relation which includes forces and effects typified as follows.

Let θ be the pitch angle. Then

$$I\ddot{\theta} + f(\theta(t-h), \dot{\theta}(t-h), t) = e(t) \tag{4}$$

inertial term,	restoring torque, with delay h	disturbance

In this simplified relation, a single torque is assumed to produce rotation about the torque axis. Thus cross-coupling of yaw and roll are neglected; this is strictly valid only if the yaw and roll motions are extremely leisurely. (The general equations of motion are given on page IX-21 (5).) The inertial term is the product of I, the moment of inertia (see page IX-24) about the torque axis, by $d^2\theta/dt^2$, the second derivative of θ with respect to the time.

The disturbance e(t) is the algebraic sum of all disturbing torques acting on the pitch axis of the vehicle. A persistent disturbance is simply a torque, constant or varying continuously with the time.

Impact by a meteorite is a discontinuous disturbance. When such an impulsive effect is involved at time T, the differential equation (4) is used as follows. The change in $\dot{\theta}$ produced by the impulsive disturbance is first calculated, and the trajectory (solution) of (4) is terminated at time T - 0, and recommenced at time T + 0 with new initial conditions. This usually requires that the solution curve have a discontinuity at time T.

The restoring torque $f(\theta(t-h), \dot{\theta}(t-h), t)$ is the reaction torque of the control system. This is a function $f(x,y,t)$, where x is the value $\theta(t-h)$ of θ computed at time t-h, and y is the value $\dot{\theta}(t-h)$ of $\dot{\theta}$ at the same time. Some systems involve several delays, and the restoring torque can be a functional rather than a function, so this term might have the form

$$F\left(\theta(t),\ \dot{\theta}(t),\ \theta(t-h_1),\ \dot{\theta}(t-h_1), \cdots,\ \theta(t-h_n),\ \dot{\theta}(t-h_n), t, t-h_1, \cdots\right)$$

in actual practice.

A long delay time can be compensated for by making mathematical changes in the control system [5]. The desired result is to obtain settling with a minimum expenditure of fuel, or in a minimum time. When the nature of the disturbance which will require control compensation is known beforehand, delayed response of parts of the control system can be absorbed by adjusting the parameters in another part of the system. For the general theory of controls, see chapter IX.

(4) <u>The Stability Problem</u>

If h=0, the solution curve of equation (4) is determined from the equation only when the initial conditions θ_o, $\dot{\theta}_o$ are known. (If h is not 0, the initial values of θ and θ_o must be known for an interval $[t_o-h, t]$ of values of t.)

Such a solution curve may have the form of Figure IX-6.

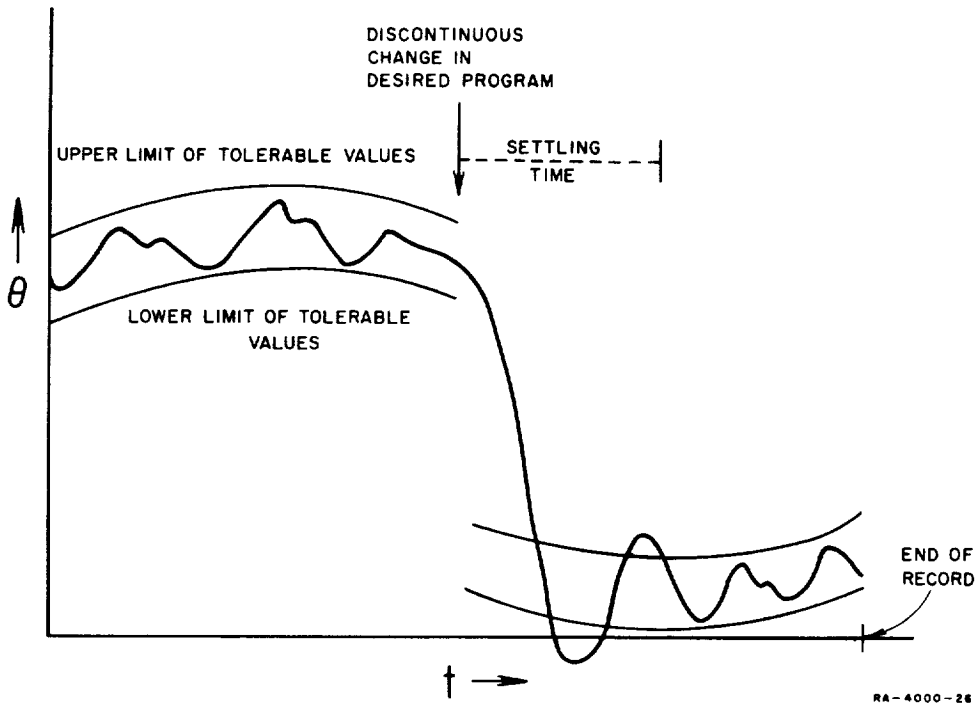

FIG. IX-6 PROGRAMMED BAND OF TOLERABLE VALUES OF θ, PLOTTED AROUND A SOLUTION CURVE OF EQ. (4)

The system designer is faced with a problem often referred to in the literature as the "stability problem;" he must design a control system which will ensure that the vehicle will serve its purpose (see page IX-6). From the mathematical point of view, there is no one stability problem, for the mathematician recognizes the diversity of the goals of various missions. Some possible stability problem (or goals) are the following [36], [43], [68].

(i) To guarantee that if the initial values of θ, $\dot{\theta}$ are in certain tolerance bands $a < \theta < b$, $c < \theta < d$, the values will remain in these bands. Here a, b, c, d can all be functions of t, as in Figure IX-6.

(ii) To guarantee that if θ, $\dot{\theta}$ are arbitrary initial values, $\theta(t)$, $\dot{\theta}(t)$ will eventually come to and remain within preassigned tolerance bands. (The time S required for θ, $\dot{\theta}$ to reach and remain within the

tolerance bands is called the settling time. The settling time S can clearly be indefinitely long if $\dot{\theta}$ is indefinitely great.)

(iii) The same as (ii) with a further specific requirement on the size of S when the initial values of θ and $\dot{\theta}$ lie within limits specified by the designer.

(iv) To guarantee that the solution curve will approach a preassigned curve $\theta = \theta(t)$.

Even though a control system fulfills the design requirements, it may be possible to improve it. The problem of optimizing controls is considered on page IX-32.

(5) The General Equations of Motion

If rotation about two of three mutually purpendicular axes is slow, equation (4) properly describes the rotation about the third axis. In the contrary case cross-coupling terms must be included. Even the motion of a rigid body in the absence of disturbing torques is complicated enough to require elliptic functions for its description; see [87, pp. 144-155]; [70, p. 155]; and the figure in [25, p. 160]. [The figures in [25], p. 168 and [70], p. 155, while correct may be somewhat misleading: there is a limiting case in which a heavy top will rise asymptotically to a sleeping position, if the initial conditions are delicately chosen ([87], p. 158, example 1). Other integrable cases of motion of a rigid body under gravitational torques are described on p. 167 of [87].]

When a satellite is controlled by the application of a torque, there are three coordinate systems, all of which have a natural connection with the problem: the coordinate system connected with the torque axis, the coordinate system in inertial space, and the directions of the principal axes of inertia of the body. If the component parts of the body are articulated, or can undergo relative motion, the directions of these axes in the body can change, and a fourth set of axes--the body axes--must be introduced as well.

If no torques act on a body, its angular momentum is a constant W. If this constant is not zero (in which case the body would be fixed in inertial space), let its direction be the Z-axis in inertial space. Let x,y,z be body coordinates, coincident with the principal axes of inertia. The motion is then described by the equations [87; p. 145]; [14, p. 14]

$$\dot{\theta} = \frac{(I_x - I_y)W}{I_x I_y} \sin\theta \cos\theta \sin\theta,$$

$$\dot{\psi} = \frac{W}{I_x} \cos^2 \phi + \frac{W}{I_y} \sin^2 \phi$$

$$\dot{\phi} = \left(\frac{W}{I_z} - \frac{W}{I_x} \cos^2 \phi - \frac{W}{I_y} \sin^2 \phi\right) \cos\theta .$$

If $I_x = I_y$, the motion is like that of a pencil spinning on its axis, the axis of spin precessing the while about the Z-axis.

Next, suppose torques do act on a rigid body. The word "rigid" implies no bending or twisting; let the net torque have components L_x, L_y, L_z in body coordinates, where the x, y, z axes are again coincident with the principal axes of inertia.

The equations of motion are

$$L_x = (I_z - I_y)\, \omega_y\, \omega_z + \frac{d}{dt}(I_x\, \omega_x) , \tag{5}$$

etc. for L_y, L_z; after ω_x, ω_y, ω_z are found from these equations, the Euler angles may be determined from the set

$$\begin{aligned} \dot{\theta} &= \omega_x \sin\phi + \omega_y \cos\phi , \\ \dot{\psi} &= -\omega_x \cos\phi + \omega_y \sin\phi , \\ \dot{\phi} &= \omega_z - \dot{\psi} \cos\theta . \end{aligned} \tag{6}$$

The solution of (6) discloses the effect of an applied torque. By writing (6) in the form

$$\begin{aligned} \omega_x &= \dot{\theta} \sin\phi - \dot{\psi} \sin\theta \cos\phi , \\ \omega_y &= \dot{\theta} \cos\phi + \dot{\psi} \sin\theta \sin\phi , \\ \omega_z &= \dot{\phi} + \dot{\psi} \cos\theta , \end{aligned} \tag{7}$$

and substituting (7) into (5), one obtains a set of nonlinear equations of control, the control parameters being L_x, L_y, L_z. The control problem is discussed on page IX-32. Note that in (5), the numbers I_x, I_y, I_z need not be constant, but may well be functions of L_x, L_y, L_z. Indeed when the control system spends fuel outboard, the moments of inertia of a satellite are changed. [This is not of practical importance in current operational satellites. It is important for satellites that must be operational for a long time.]

For a satellite traversing a curvilinear orbit, the normal, tangent, and binormal directions are named pitch, roll, and yaw axes. If the principal axes of inertia are aligned with these axes initially, and if the angular deviation is nearly a linear function $\omega_o t$ of the time, the equations for computing the three small deviations θ_1, θ_2, θ_3 of these angles from linearity are approximately [22, p. 928]; [63, p. 344]

$$
\begin{aligned}
I_x \ddot{\theta}_1 + 4\,\omega_o^2\,(I_y - I_z)\,\theta_1 + \omega_o(I_x + I_z - I_y)\,\theta_3 &= L_x + P_x(\theta, \dot{\theta}, t), \qquad (8)\\
I_y \ddot{\theta}_2 + 3\,\omega_o^2\,(I_x - I_z)\,\theta_2 &= L_y + P_y(\theta, \dot{\theta}, t),\\
I_z \ddot{\theta}_3 + \omega_o^2\,(I_y - I_x)\,\theta_3 - \omega_o(I_x + I_z - I_y)\,\theta_1 &= L_z + P_z(\theta, \dot{\theta}, t).
\end{aligned}
$$

Here $|P_x|$, $|P_y|$, $|P_z|$ are bounded by small numbers.

(6) Reaction Wheels

The principles involved in the use of reaction wheels for attitude control are deceptively simple: angular momentum is transferred from the vehicle to a flywheel. The angular rates of spin are likely to be significant, and not only the cross-coupling, but also the nonlinearities are an essential feature of the problem.

The Attitude of a Rigid Body in Inertial Space

This discussion outlines in some detail the mathematical basis for describing the attitude of a rigid body in inertial space. Some of the

the formulas are either new or not found in accessible sources. The material which is abstracted from standard works has been stripped of unnecessarily complicated formulas in some cases, or rewritten in coherent form in other cases.

The problem of describing the orientation of a body in space may be separated into two aspects: geometric, and analytical.

(1) Geometric Aspect.

The geometric aspect involves choosing three axes in inertial space, three axes in the body, and locating one set with respect to the other. It is clear that this can be done by specifying a translation followed by a rotation, or vice versa. Complications in this aspect of the problem can only be introduced when two treatments use different sets of axes, for example a right-handed vs. a left-handed system in inertial space.

(2) Analytic Aspect.

The analytic aspect is the essentially formal (and hence algebraic) step of describing the rotation by means of convenient parameters. No two sets of formulas in the literature seem to be identical, and the formal relations among them are often clouded.

The only formulas in common use which exhibit a high degree of symmetry are those involving direction cosines [25, p. 97], [87, p. 8], [14, p. 8]. If $\underset{\rightarrow}{i}^1$, $\underset{\rightarrow}{i}^2$, $\underset{\rightarrow}{i}^3$ [called $\underset{\rightarrow}{i}$ $\underset{\rightarrow}{j}$, $\underset{\rightarrow}{k}$ in the literature] are the reference axes in space, and

$$\underset{\rightarrow}{i}'^1,\ \underset{\rightarrow}{i}'^2,\ \underset{\rightarrow}{i}'^3 [\text{or } \underset{\rightarrow}{i}',\ \underset{\rightarrow}{j}',\ \underset{\rightarrow}{k}']$$

are the body axes, the matrix $A = (\alpha_{\mu\nu})$ with

$$\alpha_{\mu\nu} = i^{\mu} \cdot i'^{\nu} = \cos\,(i^{\mu},\ i'^{\nu})$$

of the nine direction cosines describes the rotation uniquely. It is a matter of agreement whether A or its transpose A^* is written to describe the rotation. The relations $AA^* = A^*A = I$, $A^{-1} = A^*$ hold (I is the identity matrix). A matrix A such that $AA^* = I$ necessarily satisfies $AA^* = I$,

and is called orthogonal since it is true that two sets $\{i\}$, $\{i'\}$ of unit vectors can be found such that the μ,ν element of A is the cosine of the angle between the μ-th vector of the first set and the ν-th vector of the second set. Thus every rotation possesses a unique orthogonal matrix, and every orthogonal matrix describes a unique rotation.

(3) Cayley's Parametrization of the 3-Dimensional Rotation Group.

The orthogonal matrices form a group: the product (i.e. result) of two rotations is again a rotation, as is physically obvious. This group has a parametrization due to Cayley. Let A be orthogonal ($AA^* = 1$), and suppose that $B = I+A$ has an inverse $(I+A)^{-1}$. Then $S = (I+A)^{-1}(I-A)$ is skew-symmetric, i.e. S has the form

$$\begin{bmatrix} 0, & s_{12}, & s_{13} \\ -s_{12}, & 0, & s_{23} \\ -s_{13}, & -s_{23}, & 0 \end{bmatrix}$$

and furthermore $A = (I+S)^{-1}(I-S)$. The nine elements of A are thus expressed in terms of the three parameters s_{12}, s_{13}, s_{23}. If $B = I+A$ does not have an inverse, B is the limit of matrices that do have inverses, and the parametrization of the 3x3 orthogonal group includes these exceptional matrices as limiting cases:

$$A = \lim_{S_1 \to S} \left\{(I + S_1)^{-1} (I - S_1)\right\} .$$

The formula $A = (I+S)^{-1}(I-S)$ reads <u>in extenso</u>

$$A = \begin{bmatrix} \dfrac{1+s_{23}^2 - s_{12}^2 - s_{13}^2}{\Delta}, & \dfrac{-2s_{12} - 2s_{13}\, s_{23}}{\Delta}, & \dfrac{-2s_{13} + 2s_{12}\, s_{23}}{\Delta} \\[2ex] \dfrac{2s_{12} - 2s_{13}\, s_{23}}{\Delta}, & \dfrac{1+s_{13}^2 - s_{12}^2 - s_{23}^2}{\Delta}, & \dfrac{-2s_{23} - 2s_{12}\, s_{13}}{\Delta}, \\[2ex] \dfrac{2s_{13} + 2s_{12}\, s_{23}}{\Delta}, & \dfrac{2s_{23} - 2s_{12}\, s_{13}}{\Delta}, & \dfrac{1+s_{12}^2 - s_{23}^2 - s_{13}^2}{\Delta} \end{bmatrix}$$

where $\Delta = 1+s_{12}^2+s_{13}^2+s_{23}^2$. The limiting cases are those in which some or all of s_{12}, s_{13}, s_{23} become infinite, maintaining fixed ratios while they do so. The limiting cases therefore form a two-parameter subset of orthogonal matrices. It is remarkable that the nine elements above are rational functions of the three parameters.

4. <u>Euler Angles.</u>

The <u>Euler Angles</u> are obtained from a different analysis of A. It can be shown that the matrix A is expressible as a product: $A = B_\phi C_\theta D_\psi$ or as $B_{\phi+\pi}\, C_{2\pi-\theta}\, D_{\psi+\pi}$ where B_ϕ, C_θ, D_ψ are given by

$$B_\phi = \begin{bmatrix} \cos\phi, & \sin\phi, & 0 \\ -\sin\phi, & \cos\phi, & 0 \\ 0, & 0, & 1 \end{bmatrix}, \quad C_\theta = \begin{bmatrix} 1 & 0 & 0 \\ 0 & \cos\theta, & \sin\theta \\ 0 & -\sin\theta, & \cos\theta \end{bmatrix}, \quad D_\psi = \begin{bmatrix} \cos\psi, & \sin\psi, & 0 \\ -\sin\psi, & \cos\psi, & 0 \\ 0, & 0, & 1 \end{bmatrix},$$

$$0 \leqq \phi < 2\pi, \qquad 0 \leqq \theta \leqq \pi, \qquad 0 < \psi < 2\pi$$

Thus the decomposition as given in some textbooks is <u>not unique</u> (a fact which is worth mentioning). Moreover the places in which the factors B_ϕ, C_θ, D_ψ contain zeros is a matter of agreement. (The above formulas are the customary ones, but there are five other possible conventions.) The product $B_\phi C_\theta D_\psi$ is, <u>in extenso</u>, [25 , p. 109]

$$\begin{bmatrix} \cos\psi\cos\phi - \cos\theta\sin\phi\sin\psi, & \cos\psi\sin\phi + \cos\theta\cos\phi\sin\psi, & \sin\psi\sin\theta \\ -\sin\psi\cos\phi - \cos\theta\sin\phi\cos\psi, & -\sin\psi\sin\phi + \cos\theta\cos\phi\cos\psi, & \cos\psi\sin\theta \\ \sin\theta\sin\phi, & -\sin\theta\cos\phi, & \cos\theta \end{bmatrix}$$

All nine entries in this matrix are unaltered under the substitution $\phi \to \phi + \pi$, $\theta \to 2\pi - \theta$, $\psi \to \psi + \pi$, as claimed above. Thus even when one of the six possible conventions is used to define the Euler angles, there are always two sets, in exactly one of which the relation $0 < \theta < \pi$ holds. In the special cases $\theta = 0, \pi$, however, there are infinitely many sets, given by $\phi + \psi =$ constant.

(5) Cayley-Klein Parameters.

F. Klein found a two-dimensional unimodular (complex) representation of the three-dimensional orthorgonal group, given by the formula

$$A \to \begin{bmatrix} \alpha & \beta \\ -\bar{\beta} & \bar{\alpha} \end{bmatrix},$$

where α, β are defined as follows:

$$\alpha = \exp\left\{\frac{i(\psi+\phi)}{2}\right\}\cos\frac{\theta}{2}, \quad \beta = i\exp\left\{\frac{i(\psi-\phi)}{2}\right\}\sin\frac{\theta}{2}.$$

The substitution $\psi \to \psi + \pi$, $\phi \to \phi + \pi$, $\theta \to 2\pi - \theta$ changes α, β to $-\alpha$, $-\beta$ respectively; every rotation is represented by exactly two matrices. This representation was the starting point of copious researches of I. Schur; applications to quantum theory are reported in E. Wigner's books [88]. These applications are now classical. See [67, ch. I, II].

Formulas for ϕ, θ, ψ in terms of α, β are

$$\cos\frac{\theta}{2} = |\alpha| \ , \ \sin\frac{\theta}{2} = |\beta| \ , \qquad 0 \leq \theta \leq \pi \ ,$$

$$\phi = \frac{\pi}{2} + \text{arc}\ \alpha - \text{arc}\ \beta$$

$$\psi = -\frac{\pi}{2} + \text{arc}\ \alpha + \text{arc}\ \beta \ .$$

(6) <u>Hamilton's Quaternions.</u>

Formulas for the nine direction cosines in terms of α, β are as follows. As is customary the notations $\gamma = -\bar{\beta}$, $\delta = \bar{\alpha}$ are used here.

$$A = \begin{bmatrix} \frac{1}{2}(\alpha^2 - \gamma^2 + \delta^2 - \beta^2) \ , & \frac{i}{2}(\gamma^2 - \alpha^2 + \delta^2 - \beta^2) \ , & \gamma\delta - \alpha\beta \\ \frac{i}{2}(\alpha^2 + \gamma^2 - \beta^2 - \delta^2) \ , & \frac{1}{2}(\alpha^2 + \gamma^2 + \beta^2 + \delta^2) \ , & -i(\alpha\beta + \gamma\delta) \\ \beta\delta - \alpha\gamma \ , & i(\alpha\gamma + \beta\delta) \ , & \alpha\delta + \beta\gamma \end{bmatrix}$$

The statement that $A \to \begin{bmatrix} \alpha \ , & \beta \\ \gamma \ , & \delta \end{bmatrix}$ is a representation of the orthogonal group means that if $A_1 \to \begin{bmatrix} \alpha_1 \ , & \beta_1 \\ \alpha_1 \ , & \delta_1 \end{bmatrix}$, then the product AA_1 has the representation

$$AA_1 \to \begin{bmatrix} \alpha\alpha_1 + \beta\gamma_1 \ , & \alpha\beta_1 + \beta\delta_1 \\ \gamma\alpha_1 + \delta\gamma_1 \ , & \gamma\beta_1 + \delta\delta_1 \end{bmatrix} ,$$

where this last matrix is the usual product of the 2x2 matrices displayed above. From this there follows a formula for multiplying two 3x3 matrices of the type displayed last above which is identical with the formula for multiplication of quaternions. [87 , p. 9 .] This fact was exploited by Hamilton.

(7) Three Unusual Parameters.

Another description of the attitude of a rigid body can be given by noting that one set of axes (unprimed) can be transformed to any second set (primed) by a single rotation. (This theorem of Euler is really a special case of a more general theorem which asserts that every continuous transformation of the surface of a sphere into itself has at least one fixed point.) Thus, the orthogonal matrix which corresponds to this transformation can be described in terms of three parameters, two of which give the direction of the axis of rotation, the third giving the amount of the rotation.

In terms of the Euler angles, these quantities are given by the following formulas

$$\cos\frac{\Phi}{2} = \pm \cos\frac{\phi + \psi}{2} \cos\frac{\theta}{2} ,$$

where Φ is the angle of rotation, and the ambiguous sign can always be taken to be $+$ if the direction of the axis of rotation is properly chosen. Direction numbers for the latter axis are

$$\ell : m : n = \sin\frac{\theta}{2} \cos\frac{\phi - \psi}{2} : \sin\frac{\theta}{2} \sin\frac{\phi - \psi}{2} : \cos\frac{\theta}{2} \sin\frac{\phi + \psi}{2} .$$

(8) Euler Angles in Terms of the Elements of A .

The Euler angles are determined in terms of the elements of the matrix A as follows

$$\sin\theta = \sqrt{1 - \alpha_{33}^2} , \quad \cos\phi = \frac{-\alpha_{32}}{\sqrt{1 - \alpha_{33}^2}} , \quad \sin\psi = \frac{\alpha_{13}}{\sqrt{1 - \alpha_{33}^2}} ,$$

$$\cos\theta = \alpha_{33} , \quad \sin\phi = \frac{\alpha_{31}}{\sqrt{1 - \alpha_{33}^2}} , \quad \cos\psi = \frac{\alpha_{23}}{\sqrt{1 - \alpha_{33}^2}}$$

$$0 \leq \theta \leq \pi , \quad 0 \leq \phi < 2\pi , \quad 0 \leq \psi < 2\pi .$$

If $\alpha_{33} = \pm 1$, there is an exception; ϕ and ψ are ambiguously determined, and are subject only to the condition $\phi + \psi =$ constant.

(9) Three Parameters Connected with Euler's Theorem.

Let d_1, d_2 be any two numbers not both zero. Then the matrix M below is orthogonal, its inverse M^{-1} is equal to its transpose, and it transforms A according to Euler's fixed-point theorem, i.e.

$$M^{-1}AM = \begin{bmatrix} 1 & 0 , & 0 \\ 0 & \cos\Phi , & \sin\Phi \\ 0 & -\sin\Phi , & \cos\Phi \end{bmatrix} = B, \quad \cos\frac{\Phi}{2} = \cos\frac{\theta}{2}\cos\frac{\phi + \psi}{2} .$$

Thus A has the representation

$$A = MBM^{-1} .$$

This representation has the three parameters Φ , ℓ , m, n ($\ell^2 + m^2 + n^2 = 1$) . [The numbers d_1, d_2 are not used to parametrize A , but only to give some convenient realization of the parametrization of A. If d_1, d_2 are changed, A is unaltered.] Here,

$$M = \begin{bmatrix} \ell , & n\, d_1/E & , & [-d_2(m^2 + n^2) - d_1\, \ell\, m]\ /E \\ m , & n\, d_2/E & , & [d_1(n^2 + \ell^2) + d_2\, \ell\, m]\ /E \\ n , & (-\ \ell d_1 - m\, d_2)/E, & & [d_2\, \ell\, n - d_1\, m\, n]\ /E \end{bmatrix}$$

where

$$\ell = \sin\frac{\theta}{2}\cos\frac{\phi - \psi}{2}/\Delta ,$$

$$m = \sin\frac{\theta}{2}\sin\frac{\phi - \psi}{2}/\Delta ,$$

$$n = \cos\frac{\theta}{2}\sin\frac{\phi + \psi}{2}/\Delta ,$$

$$\Delta^2 = 1 - \cos^2\frac{\theta}{2}\cos^2\frac{\phi + \psi}{2} , \quad \Delta > 0 ,$$

$$E^2 = (n^2 + \ell^2)d_1^2 + (n^2 + m^2)\, d_2^2 + 2\,\ell m\, d_1\, d_2 , \quad E > 0 .$$

Note: M is uniquely defined except when A is the identity, in which case there is no preferred axis, and M is an aribtrary orthogonal matrix.

(10) A Consequence of Euler's Theorem.

The following consequence of Euler's theorem

$$M^{-1} AM = \begin{bmatrix} 1 & 0 & 0 \\ 0 & \cos\Phi & \sin\Phi \\ 0 & -\sin\Phi & \cos\Phi \end{bmatrix} \tag{9}$$

is worth mentioning.

Theorem. If two orthogonal rotations (in inertial space) are commutative, either they are both rotations about the same axis, or else they are rotations through 180° about mutually perpendicular axes.

The proof is as follows: Two orthogonal transformations and their matrices A , B are given which satisfy the relation $AB = BA$. It follows immediately that $M^{-1} AM \cdot M^{-1} BM = M^{-1} BM \cdot M^{-1} AM$, where M is the matrix of the preceding section. Using formula (9) in the last relation, a little manipulation shows that if $\cos\Phi \neq 1$, the matrix $M^{-1} BM$ can only have the form

$$M^{-1} BM = \begin{bmatrix} \pm 1 & 0 & 0 \\ 0 & \cdot & \cdot \\ 0 & \cdot & \cdot \end{bmatrix} . \tag{10}$$

Further argument is needed along the following lines. If the ambiguous sign in formula (10) is $+$, then since the matrix $M^{-1} BM$ is orthogonal, it has the same form as (9), but with a different angle Φ . In this case, the matrices A , B represent rotations about the same axes.

If the ambiguous sign in (10) is negative, the orthogonal matrix $M^{-1} BM$ must have the form

$$M^{-1} BM = \begin{bmatrix} -1 & 0 & 0 \\ 0 & \cos\Phi' & \sin\Phi' \\ 0 & \sin\Phi' & -\cos\Phi' \end{bmatrix} .$$

Further use of the relation $M^{-1}AM \cdot M^{-1}BM = M^{-1}BM \cdot M^{-1}AM$ establishes that $\sin\Phi = \sin\Phi' = 0$. If $\cos\Phi = 1$, A is the identity; if $\cos\Phi = -1$, the two possibilities are

$$M^{-1}AM = \begin{bmatrix} 1 & 0 & 0 \\ 0 & -1 & 0 \\ 0 & 0 & -1 \end{bmatrix}, \quad M^{-1}BM = \begin{bmatrix} -1 & 0 & 0 \\ 0 & 1 & 0 \\ 0 & 0 & -1 \end{bmatrix};$$

$$M^{-1}AM = \text{the same}, \qquad M^{-1}BM = \begin{bmatrix} -1 & 0 & 0 \\ 0 & -1 & 0 \\ 0 & 0 & 1 \end{bmatrix},$$

and the theorem is established.

Stability and Control Theory.

It has been very fruitful to study the motion of a rigid body by investigating directly the differential equations [(1), (4), (8), page 15, etc.] which govern the attitude in space and the trajectory of the center of mass. That is, solution of the differential equations in the elementary sense is not required, a knowledge of the form of the differential equation itself being sufficient to arrive at important properties of the motion.

Many engineering textbooks contain expositions of this qualitative theory for linear equations; however these expositions have limited applicability in the field of attitude control, unless the motion in attitude is only a small one about the equilibrium position. The material needed for the study of large motions is contained in texts by Andronow and Chaikin [3], Stoker [79], Bogoljubov and Mitropolskii [6], Krasovskiĭ [36], and LaSalle and Lefschetz [37].

The concept of a transfer function plays no role in the nonlinear theory, and has only limited applicability in the linear theory when the coefficient functions are not constant.

The qualitative theory of differential equations was originated by Ljapunov, Poincairé, and Bendixson. One of the questions studied in

this theory is the stability question: under what conditions will the motion of a system be stable, if minor errors or influences enter into its operations or design?

(1) Controls

When a satellite must carry out a mission, some control of its operating parts is usually necessary. The general nature of a control system is pictured in Fig. IX-1 (page IX-9.) Neither the machine being controlled nor the rudder controlling it needs to be a mechanical part. If the "machine" is a radio transmitter, and the "rudder" is an impressed modulating frequency, the physical system can be studied by the same mathematical theory that applies to mechanical, or even acoustical systems.

The questions to which any theory must address itself concern stability, controllability, and optimization.

Stability questions have to do with short- or long-term behavior of a system which operates either as designed, or under the influence of disturbances. Such disturbances are usually small, but not necessarily so. Interesting results have been obtained when the disturbances have small mean value, but with occasional short peaks (Krasovskiĭ); also when a single impulsive disturbance occurs which is arbitrarily large (Levin, Nohel, Markus & Yamabe, Krasovskiĭ). The type of stability needed does not usually subsist without some kind of damping.

If natural damping is absent, artificial damping must be provided by controls. The problem of controllability concerns itself with the capability of a physical system to correct perturbations that result from persistent disturbances, or from injection (initial) errors. The primary question is: what errors can be corrected by the controls that are furnished with the system? Secondarily, one asks how the controls should be applied to make the correction possible?

(2) Optimization

The problem of optimization is closely allied to this last question. If controls can be applied to correct errors or carry out maneuvers, there may be more than one steering program which accomplishes the required objective. When this occurs, some control programs are better than others.

The system designer establishes an evaluation function (cost criterion, efficiency estimate, figure of merit) for comparing control programs. Typical criteria are (i) minimum time, (ii) minimum fuel, (iii) minimum fuel subject to arriving at the desired goal in one minute. The theorist collaborating with the designer determines a program which is best, or nearly best, from the point of view of the evaluation function. The designer must then manufacture a system which will follow an optimal steering program in the regime in which it is expected to operate.

We begin the outline of the mathematical theory with an example. Suppose a rudder is available that is under the direct control of an operator at all times. The amount of steering imposed by the rudder is a measurable quantity u denoted by the function $u(t)$, where t is the time. [$u(t)$ might be the rudder setting in radians, or the value of a variable resistance.] Let y be the variable to be controlled, and suppose that y satisfies the differential equation

$$\frac{dy}{dt} = u(t) \ , \quad y\ (0) = A \ . \tag{11}$$

Suppose further that the control is limited to values between -1 and +1:

$$-1 \leqq u(t) \leqq 1 \ .$$

Equation (11) is such a simple one that the following assertions concerning it can be verified at sight.

α) The control program to reduce y to $0 (y = o)$ in minimum time is as follows:

α_1) If $A > 0$, switch $u(t)$ to -1 at time $t = 0$, and switch $u(t)$ to 0 at time $t = A$.

α_2) If $A < 0$, switch $u(t)$ to 1 at time $t = 0$, and switch $u(t)$ to 0 at time $t = -A$.

α_3) If $A = 0$, no program is needed.

β) The fuel consumption is defined (reasonably) as $\int_0^\infty |u(t)|\, dt$. A control program to reduce y to 0 with minimum fuel consumption is any program that keeps the control setting of one sign. Thus if $A > 0$, $u(t)$ should be negative but not necessarily -1.

γ) The control program of α) is both a minimum-time and a minimum-fuel program.

δ) The same program also minimizes the cost function $\int_0^\infty t \quad u(t) \quad dt$.

ϵ) There is no control program which reduces y to 0 and minimizes the cost function $C_\epsilon = \int_0^\infty e^{-t} |u(t)|\, dt$. Indeed by choosing t_s large enough, the control as sketched below will make C_ϵ as small as desired.

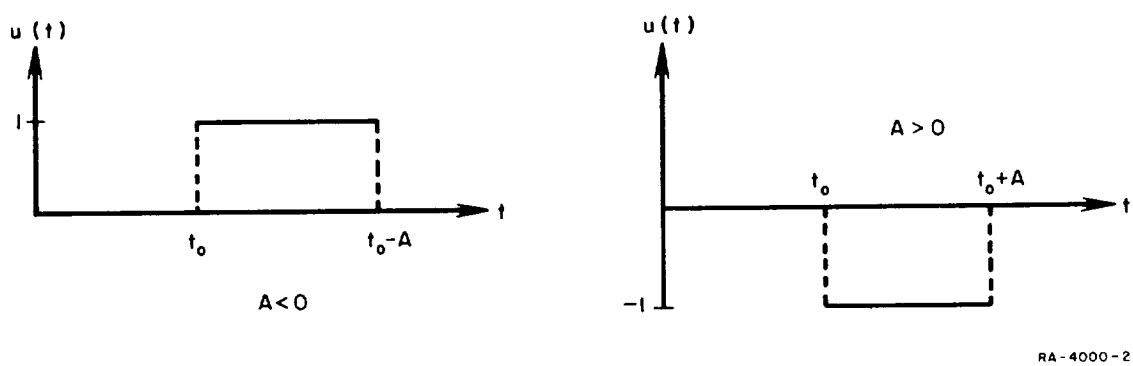

ζ) The control in α) makes the functional $\int_0^\infty [y(t)]^2\, dt$ a minimum.

$$\text{For } \int_0^\infty y^2\, dt = \int_0^\infty \frac{y^2 dy}{u(t)}$$

η) The functional $\int_0^\infty y(t)\, |u(t)|\, dt$ is neutral with respect to admissible everywhere negative controls. (It is equal equal to $\frac{1}{2}[y(o)]^2$.)

The problems illustrated by this example have been formulated in an abstract manner by E. B. Lee and L. Markus [40].

<u>The control problem.</u> Suppose the differential equations

$$\frac{dy_i}{dt} = f_i(y_1, y_2, \ldots, y_n ; u_1, u_2, \ldots, u_r ; t) \quad (i = 1, 2, \ldots, n) \tag{12}$$

are uniquely solvable in some region G of phase space $\{(y_1, y_2, \ldots, y_n)\}$, for each r-tuple of values $(u_1, u_2, \ldots, u_r)$ in some region K of control space. A target region $H(t)$ lying in G, but depending on the time t is given. It is required to adjust the controls $u_1, u_2, \ldots, u_r$ so that their values $u_1(t), \ldots, u_r(t)$ always lie in K, so that the solution of the differential system begins at $y_1^o, y_2^o, \ldots, y_n^o)$ and ends on $H(T)$ for some T, and so that some preassigned cost functional $C(y, u, t)$ is minimized for $t = T$. The number T can be preassigned or free, depending on the problem. Lee and Markus give theorems guaranteeing the existence of optimal controls when the controls u enter linearly in (12) and in the cost functional $\int \{c(x, t) + \Sigma u_j d_j(x, t)\}\, dt$.

When equations (12) are nonlinear, special methods are needed to find optimal controls. Even when the equations are piecewise linear, but with discontinuous right-hand members, ordinary methods are not sufficient to solve the problem. Difficulties can also arise when the

equations are linear, if the cost functional is not a linear fuction of the dependent variables and the controls.

When the controls do not enter the differential equations (12) or the cost functional

$$\int_{t_o}^{t} \phi(y_1 , y_2 ,\ldots, y_n , u_1 ,\ldots, u_r , t)\, dt$$

linearly, the general theory of Pontrjagin [7], [69] is sometimes effective. The method is expounded and applied to specific problems by Flugge-Lotz and Marbach [20] . Pontrjagin's theorem is as follows.

<u>Fundamental theorem of nonlinear control theory</u>. Introduce the new variables $p_i(t)$, and define the hamiltonian function $H(y , p , u , t)$ by the relation

$$H(y , p , u , t) = p_1 f_1 + \cdot \cdot + p_n f_n - \phi(y_1 ,\ldots, y_n , u_1 ,\ldots, u_r) .$$

The variables $p_i(t)$ must satisfy

$$\frac{dp_i}{dt} = - \frac{\partial H}{\partial y_i} ,$$

and the variables $y_i(t)$ satisfy

$$\frac{dy_i}{dt} = \frac{\partial H}{\partial p_i}$$

because of (12). These functions are all defined for each control $(u_1 ,\ldots, u_t)$, except that the p_i are not uniquely defined until initial conditions are specified.

If $u^*(t)$ is an optimal control, then a corresponding set of functions $p^*(t)$ exists such that

$$H(y^* , p^* , u^* , t) \geqq H(y , p , u , t)$$

for all t , $t_o \leqq t \leqq t_1$. Here the arguments y , p in the right member are any functions that correspond to the controls u , and the arguments y^* , p^* in the left member correspond to the controls u^* ,

with p^* properly chosen. When the cost function is minimized, the hamiltonian function can be maximized by proper choice of p^* .

New applications of this theorem to particular problems and systems will probably be discovered for some time to come.

REFERENCES

1. Adams, J. J. and Chilton, R. G., "A Weight Comparison of Several Attitude Controls for Satellites;" NASA Memo. 14-30-58, National Aeronautics and Space Administration, Feb. 1959.

2. Adelson, H. E., "Project ARENTS," General Dynamics/Astronautics, San Diego, California; Paper read before XIIIth Int'l Astro. Congress, Sept. 25, 1962.

3. Andronow, A. A. and Chaikin, C. E., "Theory of Oscillations," Princeton Univ. Press, 1959.

4. Angle, Ellwyn E., "Attitude Control Techniques," Navigation, 6 (1958-1960) 66-71.

5. Bass, R. W., "Improved On-Off Missile Stabilization," ARS J. 26, 644-648 (1956).

6. Bogoljubov, N. N. and Mitropolskii, Ju. A., "Asymptotic Methods in the Theory of Nonlinear Vibrations," 2nd Ed. Moscow, 1958, English translation published by Gordon and Breach, N. W. 1962.

7. Boltjanskii, V. G., Gamkrelidze, R. V., and Pontrjagin, L. S., "The Theory of Optimal Processes. I. The Maximal Principle," Izvestija akademija Nauk USSR. Math. Ser. 24 (1960) pp. 3-42.

8. Brenner, J. L. and Latta, G. E., "The Theory of Satellite Orbits Based on a New Coordinate System," Proc. Roy. Soc. A, 258, pp. 470-485 (1960).

9. Brown, Stuart C., "Predicted Performance of On-Off Systems for Precise Satellite Attitude Control," NASA TN D-1040, Ames Res. Center, Moffett Field, Calif., July 1961, 64 pp.

10. Bryant, Robert W., "The Effect of Solar Radiation Pressure on the Motion of an Artificial Satellite," NASA TN D-1063, National Aeronautics and Space Administration, September 1961.

10a. Bucher, G., "Electric Propulsion Systems for Satellite Orbit Correction," Army Ballistic Missile Agency, Huntsville, Ala., Rpt. No. DY-TN-24-59 Aug. 25, 1959.

11. Buchheim, R. W., "Lunar Instrument Carrier--Attitude Stabilization." RM-1730, Rand Corp. June 4, 1956 [ASTIA AD 112402.]

12. Cohen, C. J. and Anderle, R. J., "Verification of Earth's 'Pear Shape' Gravitational Harmonic." Science 131, pp. 807-808 (1960), Sept. 23.

References

13. Cole, R. D., Ekstrand, M. E. and O'Neill, M. R., "Attitude Control of Rotating Satellites," ARS Journal 31 (1961) pp. 1446-1447.

14. Cole, R. D., Ekstrand, M. E. and O'Neill, M. R., "Motion of a Rotating Body--A Mathematical Introduction to Satellite Attitude Control." U. S. Naval Ordnance Test Station, China Lake, Calif. April 10, 1961, 46 pp. ASTIA AD 265488.

15. Cook, G. E. and Plimmer, R. N. A., "The Effect of Atmospheric Rotation on the Orbital Plane of a Near-Earth Satellite." Proc. Roy. Soc. A 258, (1960) pp. 516-528.

15a. Cornille, Henry J. Jr., "A Method of Accurately Reducing the Spin Rate of a Rotating Spacecraft." NASA TN D-1420, National Aeronautics and Space Administration, October 1962.

16. Davis, William R., "Determination of a Unique Attitude for an Earth Satellite." [Paper No. 10] Advances in Astronautical Sciences, Vol. 2, Plenum Press. N. Y., 1958.

17. David, Robert J. and Celescope Staff, "Project Celescope: An Astrophysical Reconnaissance Satellite." SAO Special Rpt. No. 38, Smithsonian Institution, Astrophysical Observatory, Cambridge, Mass. Jan. 31, 1962.

18. De Bra, D. B. and Stearns, E. V., "Attitude Control--III." Electrical Engineering, 77 Dec. 1958, pp. 1088-1090.

18a. Edwards, R. N. and Brown, H., "Ion Rockets for Small Satellites," Publication 789-59, Mass. Institute of Technology, April 30, 1959.

19. Farrior, J. S., "Attitude Control--I." Electrical Engineering, 77 Dec. 1958, pp. 1084-1086.

20. Flugge-Lotz, I. and Marback, H., "The Optimal Control of Some Attitude Control Systems for Different Performance Criteria." (To be published in Journal for Basic Engineering; ASME Transactions.)

21. Freed, L. E., "Attitude Control System for a Spinning Body." ARS Journal 31 (1961) pp. 396-401.

22. Frye, Wm. E. and Stearns, E. V. B., "Stabilization and Attitude Control of Satellite Vehicles." ARS Journal 29 (1959) pp. 927-931.

References

23. Fulton, F. M., "Canned Liquid Rocket Engines." Astronautics 4, 37-39, pp. 105-106 Oct. 1959.

23a. Garwin, R. L., "Solar Sailing. Jet Propulsion." ARS Journal 28, 1958, pp. 188-190.

24. Gaylord, Robert S., "Differentiating Gas Jet for Space Attitude Control." ARS Journal 31 1961, pp. 75-76.

25. Goldstein, H., "Classical Mechanics." Cambridge, Mass: Addison-Wesley, 1950.

25a. Haeussermann, Walter, "Comparison of Some Actuation Methods for Attitude Control of Space Vehicles." Manned Space Stations Symposium, Proceedings of, Los Angeles, April 20-22, 1960, pp. 267-274.

26. Haeussermann, Walter, "Spatial Attitude Control of a Spinning Rocket Cluster." ARS Journal 29 (1959) pp. 56-58.

27. Haeussermann, Walter, "Recent Advances in Attitude Control of Space Vehicles." ARS Journal 32 (1962) pp. 188-195.

28. Heller, K. G. and Miksch, R. S., "Proposal for Development of Microjet Control System for a Satellite Vehicle." Advanced Technology Labs., Mountain View, Calif. (1959).

29. Holl, Herbert B., "The Effect of Radiation Force on Satellites of Convex Shape." NASA TN D-604, National Aeronautics and Space Administration, May 1961.

30. Ingram, D. A. and Stern, E., "Design and Dynamic Testing of an Ultra-High Accuracy Satellite Stabilization and Control System for the NASA Orbiting Astronomical Observatory." (Paper read before XIII-th Int'l. Astronautical Congress, Grumman Aircraft, Eng. Corp. Bethpage, N. W., USA, Sept. 25, 1962.

31. King-Hele, D. G., "Perturbations of the Orbit of a Satellite Near to the Earth." Proc. Roy. Soc. A, 248, 55-62 (1958).

32. King-Hele, D. G., "The Contraction of Satellite Orbits under the Influence of Air Drag III. High-eccentricity Orbits ($0.2 < e < 1$)." Roy. Soc. A, 267, 1962, pp. 541-557.

33. King-Hele, D. G., "The Earth's Gravitational Potential, deduced from the Orbits of Artificial Satellites." Geophys. J. RAS, 1961, pp. 3-16, Vol. 4.

34. Kozai, Y., "Numerical Results from Orbits." Special Rpt. No. 101, Smithsonian Institution, Astrophysical Observatory, Cambridge, Mass., 1962.

35. Kozai, Y., "On the Effects of the Sun and the Moon Upon the Motion of a Close Earth Satellite." Special Rpt. No. 22 (1959), Smithsonian Institution Astrophysical Observatory.

36. Krasovskii, N. N., "Stability of Motion." Translation published by Stanford University Press, 1963.

37. La Salle, J. P. and Lefschetz, S., "Stability of Liapounoff's Direct Method with Applications." New York: Academic Press (1961).

38. Lee, E. B., "Discussion of Satellite Attitude Control," ARS Journal 32 (1962) pp. 981-982.

39. Lee, E. B. and Markus, L., "Optimal Control of Nonlinear Processes." Archive for Rational Mechanics and Analysis 8 (1961) pp. 31-58.

40. Lee, E. B. and Markus. L., "Synthesis of Optimal Control for Non-linear Processes with One Degree of Freedom." Symposium on Non-linear Vibrations, Int'l. Union of Theoretical and Applied Mechanics, Akad. Sci, Ukranian SSR, Math Institute (1961).

41. Levin, J. J. and Nohel, J. A., "Global Asymptotic Stability for Non-linear Systems of Differential Equations and Applications to Reactor Dynamics." Archive for Rational Mechanics and Analysis 5 (1960) pp. 194-211.

42. Levin, J. J. and Nohel, J. A., "On a System of Integro-Differential Equations Occurring in Reactor Dynamics." J. Math. Mech. 9 (1960) pp. 347-368.

43. Liapounoff, A., "Problème Générale de la Stabilité du Mouvement." Princeton University Press, 1947.

44. Lineberry, Edgar C., Jr. and Foundriat, Edwin C., "Application of Describing-Function Analysis to the Study of an On-Off Reaction-Control System." NASA TN D-654, Langley Res. Center, Langley Field, Va. January 1961.

46. Margenau, H. and Murphy, G. M., "The Mathematics of Physics and Chemistry." (See section 15.15) N. Y.: Van Nostrand, 1956.

47. Markus, L. and Yamabe, H., "Global Stability Criteria for Differential Systems." Osaka Math. J. 12 (1960) pp. 305-317.

48. Masaitis, C., "On the Motion of Two Linked Bodies." Arch. Rational Mech. Anal. 8 (1961) pp. 23-35.

49. Maxwell-Noton, A. R., "Attitude Control of Earth Satellites." External Publications No. 505, Jet Propulsion Lab., June 3, 1958, 43 pp.

50. Moran, J. P., "Effects of Plane Librations on the Orbital Motion of a Dumbbell Satellite." ARS J. 31, (1961) pp. 1089-1096.

51. Musen, P., "Application of Hansen's Theory to the Motion of an Aritificial Satellite in the Gravitational Field of the Earth." J. Geophys. Res. 64, (1959) pp. 2271-2279.

52. Musen, Peter, "Computation of the Perturbations of Nearly Circular Orbits, Using a Non-Singular Set of Vectorial Elements." NASA TN D-1350, National Aeronautics and Space Administration, August 1962.

53. Musen, Peter, "Influence of the Solar Radiation Pressure on the Motion of an Artificial Satellite." J. of Geophysical Res., v. 65 (1960) p. 1391.

54. Musen, P., Bailie, A., and Upton, E., "Development of the Lunar and Solar Perturbations in the Motion of an Artificial Satellite." NASA TN D-494, Goddard Space Flight Center, (1961).

54a. Newton, R. R., "Ellipticity of the Equator Deduced from the Motion of Transit 4A." (1961).

55. Newton, Robert R., "Method of Stabilizing an Astronomical Satellite." ARS Journal 28 (1959) pp. 665-666.

56. Newton, R. R., "The Use of Artificial Satellites for Geodesy." Paper presented at the Symposium (April 26-28, 1962) at the U. S. Naval Observatory, Wash., D. C. (in press).

57. Nohel, J. A., "A Class of Nonlinear Delay Differential Equations." J. Math. Phys. 38 (1960) pp. 295-311.

58. O'Keefe, J. A., A. Eckels, & R. K. Squires, "The Gravitational Field of the Earth." Astron. J. 64 (1959) pp. 245-253.

59. Pasccura, Ion, "The Stability in Orbit of the Automatic Earth Satellite in the Upper Atmosphere." (Paper read before XIII-th International Astronautical Congress Sept. 25, 1962.) Acad. of the Rumanian People's Republic Commission of Astronautics, Bucharest, Rumania.

60. Perkel, Harold, "Space Vehicle Attitude Problems." Advances in Astronautical Sciences, Vol. 4, N. Y.: Plenum Press, (1959), pp. 173-192.

61. Pistiner, Josef S., "On-Off Control System for Attitude Stabilization of a Space Vehicle." ARS Journal 29 (1959) pp. 283-289.

62. Roberson, Robert E., "A Review of the Current Status of Satellite Attitude Control." J. Astronautical Sci. 6 (1959) pp. 25-30.

63. Roberson, Robert E., "Attitude Control of a Satellite Vehicle." VIII International Astronautical Congress, Barcelona (1957) pp. 317-339.

64. Roberson, Robert E., "General Guidance and Control Concepts for Satellites and Space Vehicles." IX International Astronautical Congress, Amsterdam, (1958) pp. 25-32.

65. Roberson, Robert E., "Attitude Control--II." Electrical Engineering 77 (1958) pp. 1086-1088.

66. Roberson, Robert E., "Attitude Control in Space--A Look at Current Problems and Status." XIII-th International Astronautical Congress, Sept. 25, 1962.

67. Rose, M. E., "Elementary Theory of Angular Momentum." N. Y.: Wiley (1957).

68. Rosen, J. B., "Controllable Stability and Equivalent Nonlinear Programming Problems." Proceedings of the Symposium on Nonlinear Differential Equations. N. Y.: Academic Press, 1962.

69. Rozonoer, L. I., "L. S. Pontryagin's Maximum Principle in the Theory of Optimal Systems." Automation and Remote Control 20 (1959) pp. 1288-1302, 1405-1421, 1517-1532.

70. Rutherford, D. E., "Classical Mechanics." (2nd Ed.) Edinburgh: Oliver and Boyd, 1957.

71. Rutkowski, E. V., "Variable Thrust Rocket Engines." Astronautics 4 (1959) pp. 40-41, 80-81.

72. "Satellite Stability Research, Studies Pertaining to BAMBI." Vol. II, Final Rpt., General Dynamics/Convair, Sept. 1961.

73. Schindler, G. M., "On Satellite Librations." ARS J. 29, (1959) pp. 368-370.

74. Sirri, Norri, "Space-Vehicle Attitude Control." Tech. Release No. 34-121, Jet Propulsion Lab. [Agard Meeting, (Avionics Panel) Istanbul, Oct. 2-8, 1960.] 37 pp.

75. Space Handbook, "Astronautics and Its Applications." Staff Report of the select committee on Astronautics and Space Exploration. House Document No. 86, 86th Congress, 1st session. Washington (G.P.O.). Revised 1962.

76. Spitzer, Lyman, Jr., "Space Telescopes and Components." Astronomical J. 65 (1960) pp. 242-262.

77. Stalony-Dobrzanski, J. and O. Imai, "Attitude and Flight Path Control System for a Space Station Supply Vehicle." Proc. Manned Space Stations Symposium, Los Angeles, April 20-22 (1960) pp. 281-315.

78. Stocker, Trevor A. J. and Rinaldo F. Vachino, "The Two-Dimensional Librations of a Dumbbell-Shaped Satellite in a Uniform Gravitational Field." Paper No. 37, Advances in Astronautical Sciences, Vol. 3, N. Y.: Plenum Press, 1958.

79. Stoker, J. J., "Nonlinear Vibrations." N. Y.: Interscience, 1950.

80. Taylor, Lawrence W. Jr. and John W. Smith, "An Analytical Approach to the Design of an Automatic Discontinuous Control System." Flight Res. Center, Edwards, Calif. April 1961.

81. Traynelis, K. A. and D. L. Ryan, "Hot Gas Control Systems---III. Using Reaction to Control Vehicle Attitude." Control Engineering, 8 (1961) pp. 109-114.

82. Traynelis, K. A. and D. L. Ryan, "The Practical Values of Space Exploration." Report of the Committee on Science and Astronautics, U. S. House of Representatives, 87th Congress, 1st session, House Rpt. No. 1276. Union Calendar No. 544, Wash., G.P.O. (Revised August 1961).

83. Vinti, J. P., "Theory of Spin of a Conducting Satellite--Nonequatorial Orbits." Ballistic Res. Labs., Aberdeen Proving Ground, Rpt. No. 1031 (1957).

84. Vinti, J. P., "Theory of the Spin of a Conducting Satellite in the Magnetic Field of the Earth." Ballistic Res. Labs., Aberdeen Proving Ground, Rpt. No. 1020 (1957).

85. Warwick, J. W., "Decay of Spin in Sputnik I." Planetary and Space Science 1, (1959) pp. 43-49

86. White, John S. and Q. Marion Hansen, "Study of a Satellite Attitude Control System Using Integrating Gyros as Torque Sources." NASA TN D-1073, Ames Res. Center, Moffett Field, Calif. Sept. 1961.

87. Whittaker, E. T., "A Treatise on the Analytical Dynamics of Particles and Rigid Bodies." 4th Ed. Cambridge University Press, 1937.

88. Wigner, E., "Gruppentheorie und ihre Anwendung auf die Quantenmechanik der Atomspektren." Braunschweig, F. Vieweg and Sohn akt.-ges., 1931 (Lithoprinted by Edwards Bros., Inc., Ann Arbor, Mich. 1944.) "Group Theory and Its Application to the Quantum Mechanics of Atomic Spectra." Translated by J. J. Griffin. Expanded and improved edition. N.Y.: Academic Press 1959.

89. Wilson, Raymond L. Jr., "Rotational Decay of the Satellite 1960 Eta 2 due to the Earth's Magnetic Field." NASA TN-D-1469, National Aeronautics and Space Administration, October 1962.

APPENDIX

CONTENTS

BIBLIOGRAPHY A-3

Introduction A-3

The Space Environment A-6

Attitude Control A-16

Zero Gravity Considerations A-36

Heat Balance A-42

Permeability A-51

Pressure Vessels A-80

Pressurized Gas Systems A-94

Rings and Seals A-105

DISTRIBUTION LIST B-1

BIBLIOGRAPHY

Introduction

The literature which has been accumulated for study and evaluation during this program of work is summarized in the following pages as an annotated bibliography. Each document or paper cited has been reviewed for applicability to the program, and the annotations are set down as indications of pertinent content. The annotations are in no way evaluations of the literature; the collection has been circulated to the appropriate members of the group working on this program for evaluation and reference, and specific references are found at the end of each section in this report or in the "Handbook for the Design of Pressurized Gas Systems."

An investigation of the space storability of pressurizing gases covers a multitude of interdependent disciplines which would present an unwieldy citation. For this reason, the bibliography has been divided into the eight sections which are listed in the Appendix Table of Contents. However, because the topics are interdependent, and because no entry appears more than once, it is suggested that the interested reader at least scan the titles in the groups that may at first seem to lie outside his direct concern.

Under each group heading (which is repeated on subsequent pages for ease of reference), the literature is listed either by individual authors or corporate authors, and titles are given for rapid reference. As complete a citation as possible is given for each document; in addition, ASTIA (AD-) numbers are given wherever readily available.

References to the space environment are daily becoming more prevalent, but the selection here is limited to the few which seem the most extensive in coverage or the most comprehensive in short form, and are offered only as indication of the various parameters of the space environment which were considered for this program.

The references on attitude control may at first hand appear woefully inadequate to attitude control specialists who are well aware of the rapidly growing literature in this field. However, the citations have been restricted to the theory and design of pressurized-gas attitude-control systems; other means of attitude control, the problems of attitude sensors, etc. have been by-passed as being outside the scope of this program.

Because pressurized gases may be stored as liquids or may have to work in juxtaposition with liquefied gases or liquid propellants in the zero gravity environment of space, as complete a bibliography on zero gravity considerations as available in unclassified literature is cited.

Because of the extreme thermodynamic importance of a pressurized gas system which is stored in space, an attempt has been made to gather as much information as pertinent on thermal balance and thermal control, and the influencing environmental factors.

The problem of long-term storage of a pressurized gas system which is exposed to the vacuum of space is serious enough to warrant a comprehensive bibliography on permeability of materials to gases. Materials such as might be used for vessel construction, seals, etc. are considered, as well as permeation of liquid propellants through bladder materials used to contain pressurizing gases, the penetration of gases into metals, and the formation of co-ordination compounds of gases and metals.

The bulk of the presently available literature on the theory, design, and construction of pressure vessels has been gathered and is cited here. The references are limited to the light-weight, thin-walled construction necessary for space applications, except for some references, of course, to classic theory of pressure vessel design.

The references under the heading of pressurized gas systems are a rather miscellaneous and small collection for two reasons: (1) Such information is relatively scarce in the open literature; (2) The entire bibliography is consultant for this topic. In the same category, considerations of storage efficiency are to be gleaned from the whole literature cited.

Rings and seals for space applications do not provide an extensive bibliography, but the topic seemed isolatable from the other general topics as one component of pressurized gas systems. Another component, valves, was not separated because of the scarcity of information, particularly on the topic of reliability; the few references are cited in attitude control.

Because of the almost enitrely theoretical nature of "reliability," an annotated bibliography was not compiled. However, literature relative to reliability considerations of specific components, e.g., pressure vessels, are cited under the appropriate heading.

Although the properties of pressurizing gases and materials of construction are fundamental parts of the Handbook, a bibliography is not cited here because the data presented in the Handbook are simply a judicious compilation of presently available information.

THE SPACE ENVIRONMENT

1. Alexander, W. M., McCracken, C. W., and LaGow, H. E., "Interplanetary Dust Particles of Micron Size Probably Associated with the Leonid Stream," NASA TN D-1154, December 1961.

   An interplanetary dust particle event, coincident with the Leonid meteor shower and lasting approximately 70 hours, was recorded by a sensor on the Vanguard III satellite. During this interval, the satellite's microphone system registered impacts of approximately 2800 dust particles with momenta exceeding 10^{-2} dyne-second. The impact rate varied by as much as two orders of magnitude within a few hours.

2. Anderson, Kinsey A., "Preliminary Study of Prediction Aspects of Solar Cosmic Ray Events," NASA TN D-700, April 1961.

   Several means of anticipating the frequency of solar cosmic ray emissions have been examined, particularly in connection with space exploration by man. One result is that a fairly reliable estimate of the maximum sunspot number at the peak of the next cycle (in 1969) will be available in the year 1965 or 1966. Also, large cosmic ray producing flares nearly always appear in a sunspot group that has had, very early in its development, a large unbroken penumbral area. In the events studied, the flares occurred no earlier than two days after the appearance of a penumbra above a certain criterion size. On the basis of the prediction means considered here, it appears impossible to guarantee nonencounter with solar cosmic rays in space excursions lasting much longer than four days.

3. Benson, Otis O., Jr., and Strughold, Hubertus, Eds., "Physics and Medicine of the Atmosphere and Space," John Wiley & Sons, Inc., New York, 1960.

   The Proceedings of the Second International Symposium on the Physics and Medicine of the Atmosphere and Space held at

San Antonio, Texas, November 10, 11, 12, 1958, sponsored by the School of Aviation Medicine, Aerospace Medical Center (ATC), Brooks Air Force Base, Texas.

Contents (Papers No. 1-8): On the Radiation Hazards of Space Flight; Aeronomic Chemical Reactions; Meteoritic Material in Space; Effects of Interplanetary Dust and Radiation Environment on Space Vehicles; The Electromagnetic Environment of the Atmosphere and Nearer Space; Upper Atmosphere Properties Based on Rocket and Satellite Data; Composition of the Upper Atmosphere; The Gravitational Environment in Space.

4. Berkner, Lloyd V., and Odishaw, Hugh, Eds., "Science in Space," McGraw-Hill Book Company, Inc., New York, 1961.

   Contents: General Review; Gravity; The Earth; The Moon and the Planets; Fields and Particles in Space; The Stars; The Life Sciences.

5. Davison, Elmer H., and Winslow, Paul C., Jr., "Space Debris Hazard Evaluation," NASA TN D-1105, December 1961.

   The hazard to space vehicles from natural space debris has been explored. A survey of the available information pertinent to this problem is presented. The hope is that this presentation gives a coherent picture of the knowledge to date in terms of the topics covered. The conclusion reached is that a definite hazard exists but that it can only be poorly assessed on the basis of present information. The need for direct measurement of this hazard is obvious, and some of the problems involved in making these direct measurements have been explored.

6. Eichelberger, R.J., and Gehring, J.W., "Effects of Meteoroid Impacts on Space Vehicles," ARS J., 32, 1583. (1962)

   A description is given of the fundamental characteristics of crater formation in hypervelocity impact. It encompasses both penetration into semi-infinite targets, and perforation of thin

sheets; in the latter case the effects behind the target resulting from the perforation are taken into account. The description is based mainly on an extensive series of fundamental experiments.

7. Evans, Robley D., "Principles for the Calculation of Radiation Dose Rates in Space Vehicles," A.D. Little, Inc., Report No. 63270-05-01, July 1961. (AD-263 476)

   Methods are developed for computing the radiation dose rates in a space vehicle due to its exposure to any arbitrary spectrum of incident protons or of electrons. The radiation dose rate is developed in parametric form, as a function of the number and energy of incident monoenergetic protons over the energy domain from 10 Mev to about 1000 Mev and of electrons over the energy domain from 10 kev to about 1000 kev.

8. Finkelman, E. M., "Analysis of the Combined Influences of the Micrometeoroid and Radiation Environments on Spacecraft Design," IAS Paper No. 62-128, June 1962.

   Results indicate that over-all reliabilities (for a combined protection system) greater than 98 percent are difficult to achieve within practical weight limits. Lunar spacecraft without ablative re-entry shields would require an equivalent meteoroid shield in order to achieve maximum protection for a given total weight penalty. In addition, the mission time can have a considerable effect on the shielding requirements.

9. Friedman, Herbert, "Solar Radiation," Astronautics, August 1962, p. 14.

   This paper discusses the photosphere and chromosphere of the sun, solar activity, ionizing radiation, etc., and presents the rocket and satellite observations made by the Naval Research Laboratory; well-illustrated.

10. Gazley, Carl, Jr., Kellogg, W. W., and Vestine, E. H., "Space Vehicle Environment," J. Aerospace Sci., 26, No. 12, 770 (1959)

It will be the purpose here to estimate and discuss various physical space attributes of the natural environment in the solar system. In particular, the discussion will be concerned with a cursory survey of the characteristics of solar radiations, the effects of solar and other thermal radiations on vehicle temperature, the characteristics of the Earth's magnetic fields and other magnetic fields in space, the Earth's exosphere and the solar corona, cosmic rays, and meteoroids. Estimates of the probability of vehicle skin penetration by meteoroids are also presented.

11. Goettelman, R. C., et al., "The Meteoroid and Cosmic-Ray Environment of Space Vehicles and Techniques for measuring Parameters Affecting Them," Stanford Research Institute, WADD TR-60-846, December 1960.

This study of the meteoroid and cosmic-ray environments of vehicles in space incorporates both terrestrial observations of the secondary effects of mechanisms that operate above the earth's atmosphere, and the data obtained from in situ measurements by rocket- and satellite-borne detectors.

12. Goetzel, C. G., and Singletary, J. B., "Space Materials Handbook," Lockheed Missiles & Space Company, January 1962. (AD-284 547)

This Handbook is comprised of three general parts. Part I contains chapters on the space environment, such as: ascent aerodynamic and vibration environments, the structure of the upper atmosphere, solar radiation, albedo and earth radiation, penetrating radiation, physical impact phenomena, and minor environments. Part 2 presents discussions and data on the effects of the space environment on materials, and Part 3 is concerned with material selections for specific space missions.

13. Gold, Thomas, "Cosmic Rays and the Interplanetary Medium," Astronautics, August 1962, p. 43.

A brief discussion is given of the tenuous nature of interplanetary matter, its properties and dynamics; energetic particles and magnetic fields are emphasized.

14. Herring, J. R., and Licht, A. L., "The Solar Wind," NASA TN D-487, September 1960.

Parker's model of a spherically expanding corona, the "solar wind," is compared with D. E. Blackwell's observations of the 1954 minimum equatorial corona. A significant discrepancy is found between the predicted and the observed electron densities at distances from the sun greater than 20 solar radii. Blackwell's data are found to be consistent with a model in which the corona expands mostly within a disk less than 25 solar radii thick, lying within the sun's equatorial plane. The thickness of the disk as a function of distance from the sun is qualitatively explained in terms of magnetic pressure.

15. Jastrow, Robert, Ed., "The Exploration of Space," The MacMillan Company, New York, 1960.

A Symposium on Space Physics (April 29-30, 1959) sponsored by the NAS, the NASA, and the Am. Phys. Soc. Contents: Solid Particles in the Solar System; Plasma and Magnetic Fields in the Solar System; Extension of the Solar Corona into Interplanetary Space; The Geomagnetically Trapped Corpuscular Radiation; The Argus Experiment; Capabilities for Space Research; The Moon; Primary and Secondary Objects; Remarks on Mars and Venus; Rocket Astronomy from Satellites and Space Vehicles; Experimental Research Programs in Space Sciences; Outer Atmospheres of the Earth and Planets.

16. Jazwinski, Andrew H., "A Technique of Evaluating Fuel Losses Due to Meteoroid Puncture and Some Timely Examples," ARS Preprint 2471-62, July 17-19, 1962, Cleveland, Ohio.

In general, fuel losses due to meteoroid puncture were found to be significant for single-skin tanks. Meteoroid shields should be considered as a means of reducing possible fuel losses. Weight for weight, thin, spaced skins have been found superior to single skins in reducing penetration by projectiles.

17. Johnson, F. S., Ed., "Satellite Environment Handbook," LMSD-895006, December 1960. (AD-249 473); see also "Satellite Environment Handbook," Stanford University Press, Palo Alto, California, 1961.

A rather comprehensive review of the readily available data which describe the geophysical environment encountered by artificial earth satellites is presented. Included are data on the physical properties of the upper atmosphere, ionospheric structure, penetrating particle radiation, solar radiation, micrometeorites, radio noises, thermal radiation from the earth, and geomagnetism.

18. Johnson, F. S., "Atmospheric Structure," Astronautics, August 1962, p. 54.

This paper presents a summary of the various parameters of the atmosphere, such as vertical temperature distribution, fractional composition, mean molecular weight, density, electron concentrations, etc.; most of the data is graphed as a function of altitude.

19. Kornhauser, M., "Satellite Pressure Losses Caused by Meteoroid Impacts," ARS J., 30, 475 (1960).

In order to predict the frequency of hull penetration of a satellite capsule by meteoroids, estimates are made of the frequency of encounters with meteoroids, and the cratering effect of each impact. The cratering effects are based on the correlation of recent laboratory experimentation using hypervelocity particles, and very conservative estimates of impact frequency are employed.

The resulting calculations of percentage of hull area covered by holes, and loss of internal pressure vs. time, are expected to be conservative for design purposes.

20. McCoy, T. M., "What We Know About the Hyper-Environments of Space," Space/Aeronautics R&D Handbook, 1960-1961, p. B-5.

General discussion and graphs on atmospheric constituents, pressure and density, thermal radiation, electromagnetic radiation, atomic-particle radiations, high velocity solid particles, magnetic fields, and gravitational fields are presented.

21. Newell, Homer E., Jr., "The Space Environment," Science, 131, 385 (1960).

A general discussion of the natural environment of the earth's outer atmosphere and space, and the environmental conditions peculiar to flight through space.

22. Newell, Homer E., and Naugle, John E., "Radiation Environment in Space," Science, 132 1465 (1960).

This article summarizes some of the information on radiation in space obtained by means of satellites and space probes. The physical nature of these radiations is discussed, together with the mechanism by which the radiation interacts with matter. Dosage levels are defined, and the salient factors in the choice of shielding are given.

23. Redus, Jerome R., "Sputtering of a Vehicle's Surface in a Space Environment," NASA TN D-1113, June 1962.

The rates at which a vehicle's surface is sputtered by the earth's atmosphere, by radiation belts, and by solar corpuscular radiation are calculated. It is shown that the atmospheric sputtering constitutes a serious problem at low orbital altitudes and that the damage at 1 A.U. by solar corpuscular radiation is within an order of magnitude of that caused by micrometeorites.

24. Shafer, Yu. G., Ed., "Variations of Cosmic Ray Intensity," NASA TT F-67, August 1961.

Translation of the Issue 3, Physics Series, of Transactions of the Yakutsk Branch of the Siberian Division of the Academy of Sciences of the SSSR; published by the Academy of Sciences SSSR (Moscow), 1960.

Section I describes single-model automatic counter installations used to measure the frequency of extensive atmospheric showers and cosmic rays below ground, and apparatus which records the intensity aboard artificial earth satellites. Section II deals with analysis of the role played by meteorological factors in cosmic-ray variations. Section III describes experimental and theoretical investigations of extra-atmospheric cosmic-ray variations. It should be pointed out that these investigations were based on analysis of extensive recordings of cosmic rays over a wide energy range made in Yakutsk during the IGY.

25. Shaw, J. W., "Natural Environment of Interplanetary Space," The Ohio State University Research Foundation, RF Project 847, January 1960.

Contents: Forces Acting on Objects in Interplanetary Space; Electromagnetic Radiation in Interplanetary Space; Corpuscular Radiation, Ions, and Gas in Interplanetary Space; Solid Particles in Interplanetary Space; The Ionosphere and Radiation Belts Surrounding the Earth.

26. Sonnett, C. P., "Magnetic Fields in Space," Astronautics, August 1962, p. 34.

The field of cosmic electrodynamics is discussed with respect to the magnetospheric termination, the interplanetary cavity, and instrumentation. Tabulated data is presented of high-satellite and space-probe plasma experiments, as well as a summary of magnetometer experiments.

27. United States Air Force, "Handbook of Geophysics," Revised Edition, The MacMillan Company, New York, 1961.

This Handbook should prove a valuable source of data on environmental factors. Each section is prefaced by a discussion and includes numerous tables and curves. Some of the topics of interest to spacecraft designers are: model atmospheres, temperature, pressure, density, electricity, geomagnetism, meteors, visibility, the ionosphere, thermal radiation, the sun, cosmic radiation, etc. (See also Ref. 28).

28. Valley, Shea, L., (Ed.), "Space and Planetary Environments," Air Force Surveys in Geophysics, No. 139, AFCRL-62-270, January 1962.

The eight chapters of this report are to a large degree supplementary to the Handbook of Geophysics (see Ref. 27), and no attempt was made to repeat data and information given in the Handbook. Topics in this volume include: interplanetary gas and magnetic fields, the terrestrial magnetic field, the external terrestrial gravity field, corpuscular radiation in the vicinity of the earth, solar electromagnetic radiation, the lunar environment, planetary environments, and the space environment of the solar system.

29. Wallace, R.R., Vinson, J.R., and Kornhauser, M., "Effects of Hypervelocity Particles on Shielded Structures," ARS. J., 32, 1231 (1962).

An extensive test program that was initiated to determine the advantages of the "meteor bumper" structural configuration is reported. Within the physical limitations of the program, it was proven that a substantial saving in weight or, conversely, a notable gain in safety could be achieved by the proper shielding of structure to prevent penetration by hypervelocity projectiles.

30. Whipple, F. L., "Dust and Meteorites," Astronautics, August 1962, p. 40.

A summary is presented of the recent observations of the small, particulate matter in the solar system. Included is a discussion on the physical nature of the dust and the etching rate in space.

31. Wilson, A. G., "The Space Environment," RAND, Report P-1427, February 24, 1958.

Present astronomical knowledge regarding the solar system is reviewed with emphasis on facts which may be of importance to the astronaut. The basic difference between space environment and terrestrial environment are set forth, and the material content of space which might offer a collision threat to a space vehicle is discussed.

ATTITUDE CONTROL

1. Adams, James J. and Chilton, Robert G., "A Weight Comparison of Several Attitude Controls for Satellites," NASA Memo 12-30-58L, February 1959.

   A brief theoretical study has been made for the purpose of estimating and comparing the weight of three different types of controls that can be used to change the attitude of a satellite. The three types of controls are jet reaction, inertia wheels, and a magnetic bar which interacts with the magnetic field of the earth. An idealized task which imposed severe requirements on the angular motion of the satellite was used as the basis for comparison.

2. Alexander, George, "Hot Gas Stabilizing Studied for Spacecraft," Aviation Week, December 11, 1961, p. 100.

   The Flight Control Laboratory of the Aeronautical Systems Division, using a one-fifth scale model powered by nitrogen gas, has demonstrated that individual components - such as gyros, valves, actuators, control surfaces and jets - can be assembled in an integrated system, capable of transmitting signals and power pneumatically and mechanically.

3. Alexander, George, "Nimbus Uses Wheels, Jets for Control," Aviation Week, July 10, 1961, p. 77.

   Attitude control system for Nimbus meteorological satellite features reaction wheels and compressed-gas jets to achieve stabilization within stringent design requirements of less-than-one degree position deviation and rate of less than 0.05 deg/sec around any axis.

4. Angle, Ellwyn, E., "Attitude Control Techniques," Navigation, 6, 66 (1958-60).

   Essentially, the attitude control techniques as discussed in this paper are the addition of feed-back loops comprising outputs

as a function of angular velocity to provide artificial damping and as functions of attitude reference.

5. Anon., "First 'Streetcar' Due to Go Soon," Missiles and Rockets, March 27, 1961, p. 34.

General discussion of the Orbiting Solar Observatory - construction, experiments, and attitude control system using nitrogen gas.

6. Anon., "Syncom to Benefit from Ground Control," Missiles and Rockets, October 16, 1961, p. 31.

General discussion of the Syncom communications satellite including some discussion of the attitude control system.

7. Bacha, Charles P., "Design, Development, and Testing of Advanced Pneumatic Solenoid Valve, Supplementary Report," AFBMD TR 60-203, September 1960.

This report is a supplement to AFBMD TR 59-18, "Design, Development, and Testing of Advanced Pneumatic Solenoid Valve (Single-Passage), Part No. 4683-59302." Its purpose is three-fold: (1) to report the results of a series of tests intended to demonstrate the ability of the solenoid valve to operate with various liquids and at liquid hydrogen temperature, (2) to describe the differences in design details between the first two lots of solenoid valves fabricated at the Missile Division, and (3) to combine in one volume all reports (except the basic document, AFBMD TR 59-18) relating to specifications, assembly procedures, test procedures, and test results of the solenoid valve.

8. Brereton, R. G., and Cheselske, F. J., "Dissipation of Nitrogen Gas Ejected from Orienting Mechanism of Orbiting Satellites," J. Aerospace Sci., 29, 114 (1962).

   The use of chemically inert nitrogen gas, which can be ejected into space in metered amounts to provide thrust for operating the orienting mechanism of large multipurpose satellites has been suggested. This note discusses an approximation technique for determining the time required for an ejected nitrogen cloud to be dissipated into the ambient space around a satellite.

9. Brown, Stuart C., "Predicted Performance of On-Off Systems for Precise Satellite Attitude Control," NASA TN D-1040, July 1961.

   An investigation has been made of the use of on-off reaction jets for precision attitude control of a satellite. Since a symmetrical vehicle is assumed, only single-axis control needs to be considered. The responses to initial disturbances and also limit-cycle characteristics for several systems have been evaluated. Calculated results indicate that realistic values of settling time and fuel consumption for the example considered can be obtained.

10. Bruce, Richard W., "Satellite Orbit Sustaining Techniques," ARS J., 31, 1237 (1961).

    Techniques for sustaining circular orbits, which decay because of the atmospheric drag, are examined. In particular, studies are made of the requirements for propulsion devices aboard the satellite to counteract the drag forces. Two sustaining schemes are considered, namely, a thrust device that operates continuously with the thrust magnitude equal to the drag, and a thrust device that provides discrete impulsive velocity corrections spaced throughout the desired sustaining period.

11. Cole, Roy Dale, Ekstrand, M. E., and O'Neill, M. R., "Attitude Control of Rotating Satellites," ARS J., 31, 1446 (1961).

The two fundamental aspects of attitude control are: 1) how given torques affect the orientation of a body, and 2) what torques are necessary to orient a body in a given manner. The standard classical works on rotating bodies are directed toward the former problem; this paper considers the latter.

12. Cole, Roy Dale, Ekstrand, M. E., and O'Neill, M. R., "Motion of a Rotating Body - A Mathematical Introduction to Satellite Attitude Control," NAVWEPS Report 7619, April 10, 1961. (AD-265 488).

(See Reference 11)

13. Cook, J. M., and Fleisig, R., "Initial Stabilization of the OAO Spacecraft," IAS Summer Meeting, Los Angeles, California, June 19-22, 1962, IAS Paper No. 62-152.

A brief physical description of the OAO spacecraft is presented, and the functions of the stabilization and control subsystem are outlined. Operation of the spacecraft during the phases which comprise the initial stabilization and orientation mode is explained. Performance requirements, functional block diagrams, and mathematical models are presented for the control loops that are operative during the initial stabilization phases.

14. Dahl, P. R., Aldrich, G. T., and Herman, L. K., "Limit Cycles in Reaction Jet Attitude Control Systems Subject to External Torques," Progress in Astronautics and Rocketry, Vol. 8, Academic Press, New York, 1962, pp. 599-627.

This paper considers the effect of external torques on the limit cycle operation of a reaction jet attitude control system. Expressions are developed for the impulse requirements of the limit cycle operation of a system under the action of external torques.

15. Darby, Walter O., "Design Analysis Considerations for Space Vehicle Attitude Control," Fifth Symposium on Ballistic Missile and Space Technology, Vol. I, Ed. by D. P. LeGalley, Academic Press, New York, 1960, pp. 219-38.

The paper discusses various aspects of the performance estimation of rocket and inertial attitude control systems. It is shown that the propellant required for stabilization of an unstable vehicle may be reduced drastically with proper design of the control computer and attitude sensor, and with the proper choice of operating modes.

16. Davis, William R., "Determination of a Unique Attitude for an Earth Satellite," Advances in Astronautical Sciences, Vol. 2, Paper No. 10, Plenum Press, New York, 1958; see also LMSD 2132A, 15 November 1957.

The existence of unique stable attitudes for a body orbiting in a central gravitational force field such as that of the earth is shown to depend only upon the requirement that the three principal moments of inertia be different, upon the diverging nature of the gravitation field, and upon the "centrifugal force" effects of the orbital angular velocity.

17. Day, B. P., "The Principles of Ion Jets and a Comparison with Gas Jets for Satellite Control," Royal Aircraft Establishment, Tech. Memo No. Space 3, March 1962.

The principles upon which ion jets are based and some of the practical difficulties are outlined. A comparison is made between the ion jet and propane jet as a method of producing thrust for attitude control of earth satellites.

18. DeBra, D. B., "The Effect of Aerodynamic Forces on Satellite Attitude," Advances in Astronautical Sciences, Vol. 3, Paper No. 32, Plenum Press, New York, 1958.

The effects of torques due to aerodynamic drag and the gravity gradient are computed for satellites orbiting between 80 and

375 miles altitude. Motion about the pitch axis is also discussed and the equilibrium position is determined as a function of altitude for both a dumbbell and cylindrical shaped object. The equilibrium position of the cylindrical object in three dimensions is discussed as a function of altitude.

19. DeBra, D.B., and Cannon, R.H., "Momentum Vector Considerations in Wheel-Jet Satellite Control System Design," Progress in Astronautics and Rocketry, Vol. 8, Academic Press, New York, 1962, pp. 565-97.

The preliminary problems of sizing wheels and a gas supply for a long term satellite attitude control system is discussed, with emphasis on the distinction between cyclical and secular changes in momentum. Torques which vary in magnitude as a function of orbital radius and anomaly, and whose orientation is fixed either in the satellite or in inertial space are discussed in general. Specific cases are examined for gas-leak, gravity, and aerodynamic torque.

20. DeBra, D.B. and Stearns, E.V., "Attitude Control - III," Elec. Eng., 77, 1088 (1958).

The problem considered here is the evaluation of the torques required (if any) in maintaining a given attitude for two vehicles of a nominal design in a circular orbit under the influence of a gravitational field and a model atmosphere.

21. Farless, D.L., et al., "Research Study to Determine Propulsion Requirements and Systems for Space Missions," Aerojet General Corporation, Report No. 2150, Vol. III (Final), 1 February-31 October 1961.

Propulsion requirements and criteria, selection and evaluation of alternate propulsion systems, and specifications of integrated conceptual system designs are reported for each of several space missions. Particular attention is given to lunar missions and 24-hr satellite missions.

22. Farrior, J. S., "Attitude Control - I," Elec. Eng., 77, 1084 (1958).
General discussion of the need for attitude control of space vehicles.

23. FitzGibbon, Mary C., "Satellite Orbit Control System," Advances in Astronautical Sciences, Vol. 5, Plenum Press, New York, 1959, pp. 82-97.
The results of a satellite orbit control study program which was initiated to determine a simple and accurate way to circularize an elliptical orbit or to effect a desired coplanar orbit transfer are presented. The various positions on an orbit where correction may be applied and some of the possible types of correction are mentioned.

24. Freed, L. E., "Attitude Control System for a Spinning Body," ARS J., 31, 396 (1962).
An attitude control system for a spinning body which is capable of accurately stabilizing the attitude of the spin axis under the influence of load torque impulses is presented. The transient response and steady state behavior of the system under various loading conditions are analyzed.

25. Frye, William E., and Steanrs, Edward, V. B., "Stabilization and Attitude Control of Satellite Vehicles," ARS J., 29, 927 (1959).
The status of concepts and techniques in the field of satellite attitude control and stabilization as reflected in the open literature of the previous five years is reviewed.

26. Garner, H. D., and Reid, H. J. E., Jr., "Simulator Studies of Simple Attitude Control for Spin-Stabilized Vehicles," NASA TN D-1395, September 1962.
A simple attitude-control system which used body-mounted attitude sensors and a single body-mounted reaction-control jet was devised to provide a reliable lightweight attitude control for

the final stage of small research spin-stabilized vehicles. The simulated systems utilized the spin of the vehicle to provide attitude-sensor scan, signal phasing, and control-torque commutation. Results of the simulation for three systems showed satisfactory performance over a sizable range of parameter variation.

27. Gaylord, R. S., "Differentiating Gas Jets for Space Attitude Control," ARS J., 31, 75 (1961).

This note is concerned with a technique of reducing limit cycle velocities below those which can be ordinarily measured by the control system. The device used is a 'differentiating gas jet' and may be used alone or in conjunction with reaction wheel controls.

28. Gaylord, R. S., and Keller, W. N., "Attitude Control System Using Logically Controlled Pulses," Progress in Astronautics and Rocketry, Vol. 8, Academic Press, New York, 1962, pp. 629-648.

This paper describes the development of a new approach to pulsed jet attitude control. This approach makes use of the minimum impulse capability of the gas jets to design the most efficient possible limit cycle operation and is based on simple logical control of gas thrusts.

29. General Dynamics/Convair, "Studies Pertaining to Bambi, Satellite Stability Research," Vol. II, ZR-AP-061-20, Final Report, September 1961, SSD-TR 61-14. (AD-265 156)

This volume deals with the attitude stability and control of a satellite which spins many times per orbit. Equations are derived and solved for the behavior of a spinning satellite in a circular orbit about a spherical earth. Gravity gradient is included in the equations. Both active and passive methods of damping nutations are investigated. The effect of orbit precession and spin rate decay are discussed.

30. Gilbert, Edward O., "Orbital Control and Analysis Techniques for Equatorial 24-Hour Satellites," Space Technology Laboratories, Inc., STL/TN-60-0000-27149, August 1960. (AD-269 305)

The extent and nature of orbital control is significantly dependent upon such diverse factors as orbit accuracy specification, time to achieve required orbit, booster and satellite performance capability, ephemeris and satellite vehicle errors, hardware constraints, and satellite reliability. This report is limited to the presentation of basic correction techniques and analytic methods.

31. Goldsmith, M., "The Optimization of Nozzle Area Ratio for Rockets Operating in a Vacuum," ARS J., 28, 170 (1958).

The present investigation results in a linearized analytic approach to the problem of calculating the optimum area ratio for rocket nozzles; design charts are presented.

32. Gunckel, Thomas L., II, "Methods of Longitudinal Control for 24-Hour Orbit Satellites," Space Technology Laboratories, Inc., STL/TN-60-0000-27171, August 10, 1960. (AD-269 305)

This report discusses two possible modes of longitudinal correction. One utilizes a unidirectional thrust capability and the other a bidirectional capability. A typical system will probably contain both capabilities with a hot gas engine providing the unidirectional thrust and a cold gas engine providing the bidirectional thrust.

33. Haeussermann, Walter, "An Attitude Control System for Space Vehicles," ARS J., 29, 203 (1959).

An attitude control system, applicable to any size space vehicle, is proposed which uses expulsion charges to compensate for initial disturbances. It is shown how the control system can be stabilized without direct derivatives of the attitude information.

34. Haeussermann, Walter, "Comparison of Some Actuation Methods for Attitude Control of Space Vehicles," Proc. of Manned Space Stations Symposium, Los Angeles, Calif., April 20-22, 1960. pp. 267-80.

This paper presents behavior characteristics and data of actuation methods. The systems discussed apply some methods available today and others which will become available soon. Also mentioned are refined control and servomechanism techniques.

35. Haeussermann, Walter, "Recent Advances in Attitude Control of Space Vehicles," ARS J., 32, 188 (1962).

A survey of attitude control of space vehicles covering information published prior to November 1961. The recent advances are described under the headings of space vehicles with attitude control, passive attitude control, and active attitude control.

36. Haeussermann, W., "Spatial Attitude Control of a Spinning Rocket Cluster," ARS J., 29, 56 (1959).

Attitude control possibilities and characteristics of a body with high angular momentum about one axis, the roll axis, are discussed. The investigation has been carried out in view of the attitude control requirements for the spinning top of the Jupiter C, carrying Explorer I.

37. Hawkes, Russell, "Economy Space Observatories Designed," Aviation Week, July 24, 1961, p. 57.

General discussion of the design of the Orbiting Geophysical Laboratories including reference to the argon reaction-jet attitude control system.

38. Holahan, James, "Attitude Control for Unmanned Spacecraft," Space/Aeronautics, February 1963, p. 78.

This report surveys the outlook for improvements in sensor and actuator performance to provide greater accuracy and reliability for the attitude control of second-generation spacecraft. A

table of the attitude-control systems and their accuracies for specific space vehicles is given, as well as a table comparing the various active actuation methods for spacecraft attitude control.

39. Humphrey, L. C., "A Detailed Study for a Topside Ionospheric Sounder," AFCRL TN 60-1125 (I), September 15, 1960, pp. 91-98. (AD-247 284)

Some design criteria for a reaction-jet attitude control system for an ionospheric sounding satellite are given.

40. Imgram, D. A., Ziemer, R. R., and Stern, E., "Design and Dynamic Testing of an Ultrahigh Accuracy Satellite Stabilization and Control System for the Orbiting Astronomical Observatory," presented at XIII International Astronautical Congress, Varna, Bulgaria, 25 September 1962.

This paper discusses the spacecraft design and presents a detailed description of the program and facilities for dynamic testing of the OAO.

41. Judge, John F., "Mercury Reaction Controls Revealed," Missiles and Rockets, October 9, 1961, p. 22.

A discussion of an hydrogen peroxide reaction-jet attitude control system is presented. Block diagrams of the helium pressurization system are included.

42. Knights, A., Jennings, A., and Forte, M., "Study of Integrated Cryogenic Fueled Power Generating and Environmental Control Systems. Vol. IV. Environmental Control and Attitude Control Studies," Walter Kidde and Company, ASD TR 61-327, November 1961.

The ways of using the propellants (hydrogen and oxygen) for reaction control, the possible points within the vehicle where integration can be effected, and the practicality of incorporating such a system are discussed in this report.

43. Kovit, Bernard, "Remote Spin and Attitude Control for Syncom," Space/Aeronautics, April 1962, p. 77.

Brief discussion of Syncom communications satellite which uses nitrogen jets for orientation control.

44. Landsbaum, E. M., "Thrust of a Conical Nozzle," ARS J., 29, 212 (1959).

The equations for calculating the thrust of a conical nozzle, originally presented by Malina, are reviewed. The correct use of the equations is demonstrated.

45. Lee, E. B., "Discussion of Satellite Attitude Control," ARS J., 32, 981 (1962).

For purposes of this discussion it is assumed that the attitude control is to be done in two parts: 1) the angular velocity is to be brought to zero or some desired value by a coarse control using for example, reaction jets; and 2) the attitude is then to be controlled by small jets or momentum changes. The discussion is limited to the problem of controlling angular velocity by torques generated by reaction jets.

46. Levin, E., "Propulsion Requirements for Rendezvous in Orbit," RAND Report P-1908, February 11, 1960. (AD-233 112)

It is the purpose of this paper to review several of the proposed guidance techniques for orbital rendezvous with a view toward extracting information concerning the size, type and characteristics of the propulsion systems that seem to be required for various phases of an orbital rendezvous operation. It is concluded that the propulsion requirements for manned control of the docking operation may be satisfied by compressed gas or the jets of an attitude control system.

47. Lineberry, Edgar C., Jr., and Foudriat, Edwin C., "Application of Describing Function Analysis to the Study of an On-Off Reaction Control System," NASA TN D-654, January 1961.

An analytical study was made of an automatic reaction-control system for the upper stages of a missile to determine limit cycle characteristics, corresponding duty cycles, and the effects of the various system parameters on these quantities. A nonlinear servo analysis (describing function) technique was used to obtain a mathematical representation of the nonlinear components of the system. The results obtained by this analysis are compared with the results obtained from an analog simulation including the jet reaction-control hardware. The good agreement between the results of the two studies tends to indicate the feasibility of using such an analysis technique in the early design phases of a reaction-control system.

48. McNorton, T. L., and Teitelbaum, B. R., "Research on 'Super' Non-Electronic Components," ASD TDR 62-27, April 1962.

This research and feasibility study is concerned with the derivation and description of a program for making substantial improvements in the reliability of non-electronic flight control system components. A cold gas, proportional mode, attitude control valve (reaction controller) was selected as an example to demonstrate the program approach. An analysis of the failure mechanisms in the example component is given and suggestions for control and elimination of these mechanisms are advanced.

49. Miksch, R. S., and Heller, K. G., "Design and Development of a Vaporjet Attitude-Control System for Space Vehicles," Advanced Technology Laboratories, Division of American Standard, ASO TR 61-471, December 1961. (AD-272 694).

This report summarizes a program of research and development of a lightweight, long-lived, jet-thrust-reaction, attitude-control

system of high reliability for space vehicle applications. In this system, termed "Vaporjet" the desired characteristics are obtained through low-pressure storage of propellant in its liquid state, with conversion at saturation pressure to vapor of high specific impulse and through employment of solid-state circuitry.

50. Miller, Barry, "Discoverer Tests Samos, Midas Guidance," Aviation Week, January 16, 1961, p. 88.

General discussion of guidance and control systems for Midas and Samos satellites; nitrogen-Freon-14 gas jets are used for attitude control.

51. Newton, Robert R., "Method of Stabilizing an Astronomical Satellite," ARS J., 29, 665 (1959).

In the operation of a satellite being used for astronomical observations, it is clearly advantageous for the satellite to have zero angular momentum with respect to the fixed stars. This paper presents a mathematical solution for eliminating angular momentum in small amounts over a long period of time.

52. Noton, A. R. Maxwell, "Attitude Control of Earth Satellites," JPL External Publ. No. 505, June 3, 1958. (AD-474 200).

Satellite rotation by means of on-off reaction jets is preferable to the use of flywheels, and when the form of the transient response is not of prime importance it has been shown possible to design an on-off jet-reaction system for attitude control which does not hunt in the steady state.

53. Patapoff, H., "Application of the Rate Diagram Technique to the Analysis and Design of Space Vehicle On-Off Attitude Control System," ARS Preprint 1924-61, ARS Guidance, Control, and Navigation Conf., Stanford Univ., Aug. 7-9, 1961.

53. Continued

Preliminary single axis analysis and design of a space vehicle control system, consisting of a torque producing device and a dead-band within which there are no externally or internally applied torques, can be accomplished quite effectively by a simple graphical technique termed the "Rate Diagram" method. A Rate Diagram is simply a plot of the vehicle angular rate at control torque removal versus the rate at torque application. Information regarding system stability, transient response, and limit cycle behavior can be obtained directly from such a diagram.

54. Perkel, H., "Space Vehicle Attitude Problems," Advances in Astronautical Sciences, Vol. 4, Plenum Press, New York, 1959, pp. 173-92.

The motion of an orbital vehicle about a co-ordinate system located at the center of gravity of the body is discussed. The methods used in describing this motion are used to predict the attitude of an axis fixed in the body and its response to disturbances. Several devices are described which damp out undesired rotations of a space vehicle with a specified inertia distribution.

55. Pistiner, J. S., "On-Off Control System for Attitude Stabilization of a Space Vehicle," ARS J., 29, 283 (1959).

This paper develops certain nonlinear analysis and synthesis techniques as applied to an on-off control system for attitude stabilization of a space vehicle. As an example of the possible applications of the theory, a hydrogen peroxide system is discussed. However, the analysis holds equally true for other gas systems, such as nitrogen, hydrazine, etc.

56. Rao, G. V. R., "Exhaust Nozzle Contour for Optimum Thrust," ARS J., 28, 377 (1958).

A method for designing the wall contour of an exhaust nozzle to yield optimum thrust is established. An example is carried out and typical nozzle contours are given.

57. Rider, L., "Low Thrust Correction of Orbital Orientation," ARS J., 30, 647 (1960).

It is found that the orientation parameters of inclination angle and nodal longitude can be varied by a low thrust device continuously applied perpendicularly to the orbital plane with sense of application reversed twice in every revolution.

58. Roberson, R. E., "Attitude Control," Advances in Space Sciences, Vol. 2, Academic Press, New York, 1960, pp. 351-436.

A comprehensive survey of the problems of attitude control. The discussion includes topics such as the first principles of attitude control, torques, attitude sensing, and a survey of attitude-control systems and methods.

59. Roberson, R. E., "Attitude Control - II," Elec. Eng., 77, 1086 (1958).

This paper is a discussion on the synthesis of a system for satellite attitude control; inertial control devices are emphasized.

60. Roberson, R. E., "Attitude Control of a Satellite Vehicle - An Outline of the Problems," Proc. 8th International Astron. Fed. Congr., Barcelona, 1957, 317 (1958).

This presentation describes some of the fundamental problems associated with the design of an attitude reference system and of reference axes within the body, and the nature of the attitude perturbation torques acting on the satellite.

61. Roberson, R. E., "General Guidance and Control Concepts for Satellites and Space Vehicles," Proc. 9th International Astron. Congr., Amsterdam, 1958, pp. 25-32.

The guidance and control for astronautical missions is discussed with emphasis on concepts and conceptual problems.

62. Roberson, R. E., "A Review of the Current Status of Satellite Attitude Control," J. Astronautical Sci., 6, 25 (1959).

The literature pertaining to each of the major aspects of satellite attitude control is summarized and discussed. The status of each area is examined and some problems are indicated where further work is especially desirable.

63. Roberson, Robert E., "Attitude Control in Space -- A Look at Current Problems and Status," presented at the XIII International Astron. Congr., Varna, Bulgaria, September 1962.

The major recent developments in the attitude control of space vehicles are reviewed, with emphasis on the years 1961-62. A brief survey of attitude control methods for existing vehicles and those in prospect for the near future is given. The bulk of the general attitude control literature during the subject period is reviewed within an integrated descriptive framework for the attitude control discipline.

64. Romaine, Octave, "OAO: NASA's Biggest Satellite Yet," Space/Aeronautics, February 1962, p. 54.

General discussion of the subsystems of the Orbiting Astronomical Observatory satellite, including gas-jet attitude control system.

65. Sirri, Norri, "Space Vehicle Attitude Control," JPL Tech. Release No. 34-121, October 2, 1960.

This paper is concerned with the problem of controlling the attitude, or orientation of a space vehicle (Ranger) during its journey from the Earth to the Moon. The Ranger actuation scheme

is a cold-gas system pressurized on the ground prior to the flight. It is an "on-off" system using nitrogen gas released through nozzles by electrically operated valves.

66. Space Technology Laboratories, Inc., "Semiannual Report on Research in the Field of Low-Thrust Devices for Attitude and Velocity Control in Space Missions," STL/TR-60-0000-09229, 1 January-30 June 1960. (AD-242 735).

67. Spitzer, Lyman, Jr., "Space Telescopes and Components," The Astronomical J., 65, No. 5, 242 (1960).

A brief analysis is given of some of the major problems involved in the design of a large satellite telescope for stellar observations. Attitude control and sensing are discussed.

68. Stalony-Dobrzanski, J., and Imai, O., "Attitude and Flight Path Control System for a Space Station Supply Vehicle," Proc. of Manned Space Stations.

The paper is primarily concerned with the functional design of two control systems: one for flight in space, the other for flight in the atmosphere. Requirements are given for reaction jet systems.

69. Stambler, Irwin, "Lunar Missions; Ranger: First U. S. Moon Impact Vehicle," Space/Aeronautics, February 1961, p. 45.

A description of the Ranger vehicle's nitrogen-gas jet attitude control system is given.

70. Stewart, B., and Stewart, P. A. E., "Dynamics and Engineering of Satellite Attitude Control Systems," Advanced Copy for the European Symposium on Space Technology, London, June 1961.

Part I discusses reference axes, equations of motion, linearization of the equations, jet stabilized vehicle, satellite yaw reference, torque due to gravitational gradient, semi-sun seeking

satellite, and spin stabilization. Part II discusses the interdependence of factors influencing the choice of satellite attitude control systems, the synthesis of attitude control systems, design parameters, and operational requirements.

71. Sung, C. B., and Teitelbaum, B. R., "Reaction Controllers Maintain Attitude of Space Vehicles," Control Eng., 7, No. 1, 151 (1960).

A cold-gas reaction controller which was developed for the spatial orientation control system of satellites and high altitude vehicles is discussed; a schematic drawing of the system is given.

72. Taylor, Lawrence W., and Smith, John W., "An Analytical Approach to the Design of an Automatic Discontinuous Control System," NASA TN D-630, April 1961.

An analytical investigation was conducted concerning the design of an attitude-stabilization system for stabilizing a vehicle experiencing negligible external moments. The system studied was an automatic discontinuous control system employing a linear switching function including effects of pure time delays, rise and decay time, and neutral zone. Equations were developed which generalize the transient and limit-cycle performance of the control system.

73. Tinling, B. E., "Measured Steady-State Performance of Water Vapor Jets for Use in Space Vehicle Attitude Control Systems," NASA TN D-1302, May 1962.

Measurements have been made in a vacuum environment to determine the steady state performance of several nozzles having thrusts up to 1000 dynes for use in space vehicle attitude control systems. Water vapor was used as a propellant. The results indicate that the trend of the variation of specific impulse and thrust coefficient with expansion ratio is predicted by calculations based on one-dimensional isentropic flow.

74. Traynelis, K. A., and Ryan, D. L., "Hot Gas Control Systems - III. Using Reaction to Control Vehicle Attitude," Control Eng., 8, No. 7, 109 (1961).

A discussion is given of reactive control systems. Comparison is made of the performance of stored gas systems and liquid or solid propellant gas-producing systems.

75. White, J. B., "Meteoric Effects on Attitude Control of Space Vehicles," ARS J., 32, 75 (1962).

The purpose of this paper is to develop general methods for determining meteoric distrubances for any known vehicle configuration; the methods are then applied to the 24-hour communications satellite for illustrative purposes. Probable disturbance is in the order of 10^{-3} degrees per second.

76. White, John S., and Hansen, Q. Marion, "Study of a Satellite Attitude Control System Using Integrating Gyros as Torque Sources," NASA TN 0-1073, September 1961.

This report considers the use of single-degree-of-freedom integrating gyros as torque sources for precise control of satellite attitude. Some general design criteria are derived and applied to the specific example of the Orbiting Astronomical Observatory. The results of the analytical design are compared with the results of an analog computer study and also with experimental results from a low-friction platform. The steady-state and transient behavior of the system, as determined by the analysis, by the analog study, and by the experimental platform agreed quite well.

ZERO GRAVITY CONSIDERATIONS

1. Andes, G.M., and McNutt, J.E., "Capillary Phenomena in Free Fall," J. Aerospace Sci., 29, 103 (1962).

A brief report on some experimental work which resulted in the conclusion that detachment of liquids from bounding solid surfaces is not expected when gravity goes to zero, although free-surface shape will change; this conclusion is true for any contact angle.

2. Andrews, Richard C., "Zero Gravity Liquid Oxygen Converter," ASD TR 61-431, September 1961 (AD-267 047).

This report discusses a program to develop a new converter design that includes an automatically controlled mechanical heat valve for controlling the internal pressure of the flask. This design also includes an internal control valve and heat transfer coil to prevent excessive boil-off during standby conditions. Although some difficulty was experienced with the internal valves, the tests conducted during the program showed the design concepts to be a promising approach.

3. Bitten, John, "Liquid Oxygen Converter," ARF Report No. 3164-12, January 1961, WADD TR 60-669. (AD-249 780)

A 5-liter zero gravity liquid oxygen converter based on the paramagnetic and surface tension properties of liquid oxygen was designed, and a prototype unit was constructed. The design study showed that the magnitude of the magnetic or surface tension forces is sufficient to operate the unit under zero gravity conditions.

4. Brazinsky, Irving, and Weiss, Solomon, "A Photographic Study of Liquid Hydrogen under Simulated Zero Gravity Conditions," NASA TM X-479, February 1962.

The transient behavior of liquid hydrogen, under conditions of zero gravity, was studied photographically. The hydrogen was

subjected to weightlessness by dropping a Dewar containing this liquid from a height of nine feet. During the weightless period of approximately 3/4 second, the liquid rose along the walls of the Dewar into the original vapor space. The rise occurred at constant velocity for practically the entire duration of this period. Adhesive forces were concluded to be the primary cause of the liquid rise along the wall.

5. Clodfelter, Robert G., and Lewis, Roger C., "Fluid Studies in a Zero Gravity Environment," ASD TN 61-84, June 1961. (AD-270 476).

   This Technical Note presents results of a test program conducted in a Zero G environment simulated in a C-131 and a KC-135A aircraft. These tests should not be considered conclusive, but rather as preliminary tests designed to gain a better understanding of the problems involved. Other programs being conducted in this area are discussed briefly.

6. Hammer, Lois R., "Aeronautical Systems Division Studies in Weightlessness: 1959-1960," WADD TR 60-715, December 1961.

   Section IV in this report includes topics such as: Power generation heat transfer problems; and Fluid orientation, free-floating water sphere, adhesion and cohesion, use of small acceleration for fluid and vehicle orientation, and rotation tank for venting and transfer.

7. Hankins, Dale L., and Gardner, Paul J., "Liquid Oxygen Converter for Weightless Environment," ASD TR 61-634, November 1961. (AD-273 175).

   The random orientation of the liquid oxygen in a weightless environment is overcome by a flexible hemispherical diaphragm attached to the inner end of the supply port. By application of build-up pressure to the exterior of the diaphragm, the collapsing diaphragm forces liquid to and through the supply port.

8. Hartkopf, Stewart E., "Zero Gravity Tests of X-15 Nitrogen Tank," AFFTC TN 60-34, January 1961. (AD-250 038).

The AFFTC and the NASA FRC completed testing of the steel X-15 liquid nitrogen tank in a zero gravity environment from 5 August to 6 October 1960. The purpose of the test program was to determine if the tank would expel the required amount of liquid nitrogen under zero gravity conditions. Although the tests were inconclusive, indications are that the tank will produce the design liquid nitrogen requirements while in a zero gravity environment.

9. Li, Ta, "Liquid Behavior in a Zero-G Field," IAS Paper No. 61-20, New York, New York, January 23-25, 1961.

This paper discusses various surface energies, various bubble shapes, heat transfer, and small disturbances, the behavior of mercury, and presents a solution of the isoperimetrical problem for double integrals.

10. Neiner, J. J., "The Effect of Zero Gravity on Fluid Behavior and System Design," WADC TN 59-149, April 1959. (AD-228 810).

The effect of a zero gravity environment on fluids of different densities and viscosities is presented, as well as a discussion of the behavior of air bubbles released in the fluid and methods of fluid transfer under this condition. A program of anticipated testing is also outlined.

11. Petrash, Donald A., Zappa, Robert F., and Otto, Edward W., "Experimental Study of the Effects of Weightlessness on the Configuration of Mercury and Alcohol in Spherical Tanks," NASA TN D-1197, April 1962.

The zero-gravity liquid configuration of several common liquids in spherical glass tanks was experimentally investigated. The zero-gravity equilibrium configuration for ethyl alcohol is a

completely wetted tank wall with a spherical vapor bubble in the interior of the liquid; for mercury, it is one in which the liquid-vapor surface is a surface of constant curvature and the mercury remains in contact with the walls at the same contact angle as was observed in the 1-g environment.

12. Radcliffe, William F., and Transue, John R., "Problems Associated with Multiple Engine Starts in Spacecraft," ARS J., 31, 1408 (1961).
A discussion of selected problems associated with obtaining multiple-start capability in a launch vehicle is the principal content of this paper; some of the problems discussed are: (1) boiling heat transfer under zero g, (2) fluid behavior under zero g, (3) storage of propellants during extended coast periods, (4) venting of propellant tanks during zero g conditions, (5) collection of propellants prior to engine starts.

13. Reitz, John G., "Zero Gravity Mercury Condensing Research," Aerospace Eng., 19, No. 9, 18 (1960).
Mercury condenser apparatus test problems during zero g were explored. The conclusions from these tests are applicable to three areas of space power system technology -- feasibility demonstration, ground test validation, and problem identification.

14. Reynolds, W. C., "Behavior of Liquids in Free Fall," J. Aerospace Sci., 26, 847 (1959).
The conclusions of this note are that fluids which wet their container will crawl around the wall, leaving the gas pocket in the center; fluids which do not wet will kick themselves off the wall, leaving the gas in contact with the wall.

15. Reynolds, W. C., "Hydrodynamic Considerations for the Design of Systems for Very Low Gravity Environments," Stanford University, Tech. Report No. LG-1, September 1, 1961.

15. Continued

Some technical problem areas associated with hydrodynamics in low gravity environments are discussed. The fundamentals of capillary phenomena are reviewed, and employed in some simple qualitative considerations leading to the enumeration of important regimes in hydrostatics and hydrodynamics in low gravity. Various methods for simulation of low gravity environments are discussed and evaluated in terms of the modeling requirements and the hydrostatic scaling parameters.

16. Roennau, L., "Final Report on Liquid-Gas Interface in Zero-G," BSD TDR 62-9, 31 December 1961. (AD-273 652)

Four experimental units, containing a camera and telemetry, were designed and built to be flown in rocket vehicles in order to study the behavior of liquid-gas mixtures in the absence of an acceleration field. Because of vehicle malfunctions, no data were received from two flights; a third experiment was waiting flight scheduling at the writing of this report.

17. Satterlee, H. M., "Propellant Control at Zero G," Space/Aeronautics, July 1962, p. 72.

This article reviews the parameters that affect propellant location in coasting flight - primarily the characteristics of the propellant and the liquid-gas interface in a tank, the accelerations on the tank system, and the shape of the tank and its internal hardware - and shows that this location can be determined with sufficient accuracy.

18. Siegel, Robert, "Transient Capillary Rise in Reduced and Zero-Gravity Fields," J. Appl. Mech., 28, Series E, No. 6, 165 (1961).

Experimental information is given on the transient "capillary" rise of water into vertical tubes subjected to reduced and zero-gravity fields. An approximate analysis is presented to aid in

the interpretation of the data and predict the transient rise. Photographs are given to illustrate behavior of the water.

19. Siegel, R., and Usiskin, C., "A Photographic Study of Boiling in the Absence of Gravity," J. Heat Transfer, 81, No. 8, 230 (1959).
To eliminate the influence of gravity, a container for boiling water and a high-speed motion picture camera were mounted on a platform which was allowed to fall freely approximately eight feet. During the free fall, photographs were taken of boiling from various surface configurations such as electrically heated horizontal and vertical ribbons. The results indicate that gravity plays a considerable role in the boiling process, especially in connection with the motion of vapor within the liquid.

20. Stehling, Kurt R., "Behaviour of Liquid Hydrogen in a Space Environment," J. Brit. Interplanetary Soc., 18, Nos. 5-6, 245 (1961).
This paper describes some of the theoretical and experimental approaches that are currently in vogue to yield some understanding of the behaviour of liquid hydrogen in a zero-gravity environment.

21. Trusela, Robert A., and Clodfelter, Robert G., "Zero-G Space Boilers," SAE J., 68, No. 9, 56 (1960).
This article discusses the importance of adhesive and cohesive forces on fluid heat transfer problems for space vehicles; visual evidence of these forces was obtained when a test rig was flown in a Keplarian trajectory.

22. Unterberg, Walter, and Congelliere, James, "Zero Gravity Problems in Space Powerplants: A Status Survey," ARS J., 32, 862 (1962).
This paper deals with the effect of zero g on the operation and design of space powerplants with emphasis on the physical phenomena involved. The principal aim is to survey the present status of zero-g technology and hence to indicate the zero-g efforts required for the future.

HEAT BALANCE

1. Acker, R. M., Lipkis, R. P., and Vehrencamp, J. E., "Temperature Control System for the Atlas Able-4 Lunar Satellite," Space Technology Laboratories, Inc., AFBMD Doc. No. 61-04-693. (AD-269 302)

   This report discusses the development of an active, lightweight closed loop temperature control system for the Atlas-Able-4 (Pioneer IV) satellite. The selection of titanium dioxide coatings for external surface temperature control is described.

2. Anon. "Ferrocene Yields Ultraviolet Absorbers," C & EN, September 18, 1961, p. 51.

   A brief discussion is given of the effectiveness of ferrocene derivatives in protecting many types of coatings in a simulated space environment, for example, preventing degradation of polymers in an ultraviolet environment. However, the fact that they are highly colored compounds may prove a drawback.

3. Aeronautical Systems Division, "Solar Absorptance and Total Hemispherical Emittance of Surfaces for Solar Energy Collection," ASD TR-61-558, July 1962.

   The solar absorptance and the total hemispherical emittance are reported between 200 and 800°C for six polished metals, eight metals with porous surfaces, and 15 coated metals. An expression for the efficiency of a solar energy collection surface in terms of its solar absorptance, total hemispherical emittance, solar power concentration, the solar irradiance, and the operating temperature is developed.

4. Charnes, A., and Raynor S., "Solar Heating of a Rotating Cylindrical Space Vehicle," ARS J., 30, 479 (1960).

   Solar heating in a space vehicle idealized as a thin walled circular cylinder rotating with uniform velocity about its geometric axis is studied for a situation in which heat transfer by convection

and heat exchange within the cylinder is negligible. The non-linear problem is approximated through a perturbation analysis and detailed estimates are made of the parameters of interest for various ranges of speed of rotation.

5. Cunningham, F. G., "Earth Reflected Solar Radiation Input to Spherical Satellites," NASA TN D-1099, October 1961.

   A general calculation is given for the earth's albedo input to a spherical satellite, with the assumption that the earth can be considered a diffusely reflecting sphere. The results are presented in general form so that appropriate values for the solar constant and albedo of the earth can be used as more accurate values become available.

6. Dennison, A. J., Jr., "Illumination of a Space Vehicle Surface due to Sunlight Reflected from Earth," ARS J., 32, 635 (1962).

   An arbitrarily positioned and oriented space vehicle surface that is illuminated by Earth-reflected sunlight is considered. A simple and efficient numerical technique for computing the magnitude of this illumination is presented. Numerical results are given and discussed for all significant ranges of vehicle surface positions and orientations.

7. Dugan, Duane W., "A Preliminary Study of a Solar-Probe Mission," NASA TN D-783, April 1961.

   A preliminary study is made of some problems associated with the sending of an instrumented probe close to the Sun for the purpose of gathering and telemetering back to Earth information concerning solar phenomena and circumsolar space.

   An examination of the heating problem during close approaches of a probe to the Sun indicates that perihelion distances as small as 0.05 A.U. (4.6×10^6 miles) may be feasible. The shape,

dimensions, material properties, and orientation of a probe with respect to the Sun are shown to influence the maximum temperature and the temperature distribution over a vehicle at a given solar distance.

8. Eckard, L. D., Jr., "Thermal Engineering of the Transit Satellites," Johns Hopkins University, Applied Physics Laboratory, Report CM-1001, September 1961. (AD-273 555)

The problems and solutions of thermal engineering for the Transit 1A through 3B experimental satellites, as well as the satellite space environment factors affecting external and internal temperatures, are presented. Important variables available to the designer for controlling satellite temperatures are discussed, including surface coatings, vehicle shape and orientation, orbital parameters, and launching conditions.

9. Edwards, D. K., "Directional Solar Reflectances in the Space Vehicle Temperature Control Problem," ARS J., 31, 1548 (1961).

Directional spectral reflectances of typical spacecraft surface systems are presented. The surface systems reported are aluminum foil, anodized aluminum, aluminum foil coated with oxidized titanium, sandblasted stainless steels, flame-sprayed aluminum oxide, and white paint. The geometries considered are the sphere, cylinder, and cone.

10. Gaumer, R. E., Clauss, F. J., Sibert, M. E., and Shaw, C. C., "Materials Effects in Spacecraft Thermal Control," Lockheed Missiles and Space Division, LMSD-704019, November 1960. (AD-269 918)

The radiation characteristics of metals and paints have been determined experimentally and results are given in tabular form. Data on the effects of ultraviolet and high vacuum for various paints are also presented.

11. Gaumer, R. E., "The Spectrum of Materials Available for the Utilization and Control of Solar Energy," United Nations Conference on New Sources of Energy, E/Conf. 35/S/42, 17 April 1961.

The spectral ranges of available radiant energy are reviewed and the physical principles controlling radiant energy emission and absorption are outlined. Space environmental constituents are listed and discussed.

12. Gaumer, R. E., "Materials for Solar-Energy Systems," Space/Aeronautics, October 1961, p. 60.

A condensation of the paper given as Reference 11; a table of the radiation characteristics of 23 selected materials is included.

13. Gaumer, R. E., et al., "Thermal Control Materials," Space Materials Handbook, Lockheed Missiles and Space Company, January 1962. (AD-284 547)

The techniques of spacecraft thermal control are discussed in detail. The general conditions affecting the choice of materials for passive thermal control are discussed, as well as the methods of determining emittance and reflectance.

14. Goetze, D., "Spacecraft Temperature Control: State of the Art," Space/Aeronautics, July 1961, p. 55.

This article presents a heat-balance equation for one particular instant and one particular area segment of an orbiting spacecraft and then shows how to extend this equation over the spacecraft's entire surface. It points out that the ratio of short-wave absorptance to infrared emittance for the surface material covering the spacecraft is a key factor in developing adequate temperature control.

15. Kress, Eileen B., "Spacecraft Temperature Control: Breakthrough on Transit," Space/Aeronautics, July 1961, p. 60.

A brief report on the development of a polyurethane-based coating for the passive thermal control of the plastic-bodied Transit satellite.

16. McKellar, L. A., "Effects of the Spacecraft Environment on Thermal Control Materials Characteristics," Spacecraft Thermodynamics Symposium, LMSC Research Laboratories, Palo Alto, Calif., 28 March 1962, Preprint 5-76-62-8.

The importance of thermal radiation characteristics in the thermal design of an orbiting satellite is noted, and some implications of simultaneous exposure to the total space environment are mentioned; thermal control material stability is reviewed.

17. Materials Advisory Board, "Materials Problems Associated with the Thermal Control of Space Vehicles," Report MAB-155-M, October 20, 1959. (AD-228 534)

This report has been prepared to deal primarily with problems in the temperature control of space vehicles, and should be taken as an indication of the need for increased orientation of the national materials program to the requirements of space vehicle design and operation.

18. Marshall Space Flight Center, "Juno II Summary Project Report. Vol. I. Explorer VII Satellite," NASA TN D-608, July 1961.

Chapter 6 of this volume describes the passive thermal control system for Explorer VII. The properties of the materials used are given, as well as the theoretical temperatures to be expected during the satellite's orbit.

19. Moore, H. R., "Research on Spectrally Selective Materials and Surfaces," Electro-Optical Systems, Inc., ARL 62-336, April 1962.

19. Continued

This report describes research on spectrally selective materials and surfaces with particular reference to their application to solar collection and thermionic conversion. Experimental work included thermal equilibrium measurements of metallic oxides on metal substrates, absorption spectrum and thermionic emission properties of nickel oxide, and measurement of the fluorescence spectrum of a rare earth chelate.

20. Nichols, Lester D., "Effect of Shield Position and Absorptivity on Temperature Distribution of a Body Shielded from Solar Radiation in Space," NASA TN D-578, January 1961.

An analytical study of temperature distributions on two disks subjected to solar radiation has been made. The calculations show the possibility of using a movable shield as a temperature control device for a space vehicle.

21. Nichols, Lester D., "Surface-Temperature Distribution on Thin-Walled Bodies Subjected to Solar Radiation in Interplanetary Space," NASA TN D-584.

Temperature distributions on thin-walled bodies subjected to interplanetary space conditions have been calculated. The effect of the geometrical configuration on the temperature has been determined by considering a sphere, a cone, and a cylinder. Internal radiation and body rotation will also effect the temperature distribution. Results of calculations for a hollow sphere (including internal radiation) and a rotating sphere show that a small temperature variation may be maintained at a reduced value of the conduction parameter.

22. Nothwang, G. J., Arvesen, J. C., and Hamaker, F. M., Analysis of Solar-Radiation Shields for Temperature Control of Space Vehicles Subjected to Large Changes in Solar Energy," NASA TN D-1209, March 1962.

An analysis has been made of a passive temperature control system for a space vehicle which is subjected to variable solar energy. This system effectively isolates the capsule from the incident solar energy by the use of solar-radiation shields. The analysis was applied to two configurations for solar probe applications, a conical capsule with a single shield, and a conical capsule with a double shield.

23. Ornstein, M. P., "Solar Radiation," J. Environmental Sci., April 1962, p. 24.

A brief discussion is given of the characteristics of the solar spectrum and the problems involved in solar simulation.

24. Schatz, E. A., and McCandless, L. C., "Research for Low and High Emittance Coatings," American Machine and Foundry Co., ASD TR-62-443, May 1962.

Eight transparent protective coatings for gold were evaluated with respect to their ability to withstand temperatures of 1000°C and not to increase significantly the low total emittance of the substrate. A second aspect of the work was the study of the spectral normal emittance in the 1-15 micron wavelength range at 1000°C of sintered binary mixtures of pure compounds.

25. Schmidt, C. M., and Hanawalt, A. J., "Skin Temperatures of a Satellite," Jet Propulsion, 27, 1079 (1957).

This paper gives numerical computations for a nonrotating cylindrical shell with one end pointing earthward. The problem of analysis is largely one of geometry, involving spacewise as well as timewise variations in skin temperature. For the specific

configuration considered herein, nominal limits on the skin temperatures are -200 and +100°F.

26. Shipley, W. S., and Thostesen, T. O., "Radiative Properties of Surfaces Considered for Use on the Explorer Satellites and Pioneer Space Probes," Jet Propulsion Laboratory, Memo: No. 20-194, February 15, 1960.

Spectral reflectance data in graphical form and absorptance-emittance data in tabular form are presented for surface materials considered for use on Explorer Satellites and Pioneer space probes. The surfaces ranged from bare aluminum, titanium, and stainless steel to painted coatings, coatings of Rokide A, and anodized and plated coatings.

27. Snyder, N. W., Gier, J. T., and Dunkle, R. V., "Total Normal Emissivity Measurements on Aircraft Materials Between 100 and 800°F, "Trans. of ASME, 77, 1011 (1955).

The results of techniques developed and used to determine the mean effective emissivity of different surfaces over a range of temperatures are presented.

28. Streed, E. R., "Experimental Determination of the Thermal Radiation Properties of Temperature Control Surfaces for Spacecraft," Spacecraft Thermodynamics Symposium, LMSC Research Laboratories, Palo Alto, Calif., 28 March 1962, Preprint 5-16-62-7.

Measurements are being performed for (1) optical materials research, (2) coating-surface finish development, (3) precise data for thermal design purposes, and (4) production control and final inspection. Examples of work performed in each of these areas and a description of the equipment used are presented.

29. Van Vliet, Robert M., Mattice, J. J., and Cross, R. A., "Spectrally Selective Coatings for Temperature Control of Space Probes," WADD TR 60-386, December 1960.

Two special purpose organic coatings were developed for evaluation on a short duration space probe. The coatings required very accurate tailoring of the reflective and emissive properties for temperature control of the space vehicle (Journeyman). The coatings were designed for solar absorptivities of 0.53 and 0.94 with emittances of 0.95 and 0.8, respectively.

30. Van Vliet, R. M., and Mattice, J. J., "Environmental Considerations for Thermal Protective Coatings," Materials Symposium, 13-15 September 1961, Phoenix, Arizona, ASD TR 61-322. (AD-264 193).

This summary points out those elements of space environment which are of chief concern to the proper performance of coatings and considers the major interactions resulting from such exposure. The progress and challenges concerned with achieving reliable coating systems are reviewed.

31. Winn, R. A., "Thermal Emittance Measurements," Materials Symposium, 13-15 September 1961, Phoenix, Arizona, ASD TR 61-322.

A discussion is given of the problems involved in the measurement of thermal emittances of materials.

32. Whitby, L., "Design of Paint Coatings for Spacecraft," Lockheed Missiles & Space Division, LMSD-703026, June 1960. (AD-266 890).

This memorandum presents the environment to which materials are exposed in space. In addition, temperature control of the internal space of the vehicle is considered. To provide temperature control, coatings of various types on the metal surfaces are essential; the design of these coatings with reference to the environment is presented.

PERMEABILITY

1. Alexander, W. A., and Pidgeon, L. M., "Kinetics of the Oxidation of Titanium," Can. J. Res, 28, 60 (1950).

   The rates of oxidation of titanium powder and sintered bar have been investigated in the temperature range 25° to 550°C at pressures of 2 and 20 cm oxygen maintained constant throughout each experiment. It has been shown that the oxidation process can be divided into two mechanisms, viz., the formation of a thin surface film and diffusion of oxide into the metal.

2. Altemose, V. D., "Helium Diffusion Through Glass," J. Appl. Phys., 32, 1309 (1961).

   Helium permeation rates have been determined through 20 different glasses using a mass spectrometer to measure the gas flow rates directly. Values of diffusion constants and solubilities have been compared for 10 of these glasses.

3. Ash, R., and Barrer, R. M., "Permeation of Hydrogen through Metals," Phil. Mag., 8, 1197 (1959).

   The theory of permeation of hydrogen through certain transition metals has been further developed. It has been shown that this theory, in which certain slow phase-boundary processes couple with diffusion to produce the permeation phenomena, can in rather simple ways predict the observed behavior.

4. Barrer, R. M., "Diffusion in and through Solids," Cambridge Press, London, 1951.

5. Barrer, R. M., "Stationary and Non-Stationary States of Flow of Hydrogen in Palladium and Iron," Far. Soc. Trans., 36, 1235 (1940).

Permeability

A new method has been applied to measure the diffusion constants of hydrogen in iron and palladium. The mathematical analysis required to use this method, previously given only for slabs, is here extended to hollow tubes. Values of the permeability (P) and the diffusion constant (D) were determined for palladium from room temperature to several hundred degrees centigrade; and for iron over the interval 0° to 80°C.

6. Barrer, R. M., "Some Properties of Diffusion Coefficients in Polymers," J. Phys. Chem., 61, 178 (1957).

   An account has been given of several recent developments to sorption and diffusion in some polymers. The five diffusion coefficients characteristic of any binary mixture can all be obtained in penetrant-polymer mixtures, but past measurements in a variety of systems have probably given erroneous diffusion coefficients D because it has only recently been realized that in them the diffusion coefficients are a function of time as well as concentration. A classification of penetrant-polymer systems has been given, with examples of each category.

7. Barrer, R. M., and Skirrow, G., "Transport and Equilibrium Phenomena in Gas-Elastomer Systems. I. Kinetic Phenomena," J. Polymer Sci., 3, 549 (1948).

   The influence has been studied of systematic alterations in the amount of cross linking in elastomers upon diffusion coefficients and permeability constants in elastomers of homologous paraffin hydrocarbons. In a number of such media the influence of chain length of the paraffins upon the transport phenomena has also been investigated.

8. Barrer, R. M., and Skirrow, G., "Transport and Equilibrium Phenomena in Gas-Elastomer Systems. II. Equilibrium Phenomena," J. Polymer Sci., 3, 564 (1948).

The solubility of nitrogen, ethylene, and the n-paraffins from methane to pentane has been measured in a series of natural rubber vulcanizates in relation to chain length of paraffin, temperature, and degree of cross linking of vulcanizates which contained between 1.7 to 21.9% combined sulfur.

9. Bartholomew, C. Y., and LaPadula, A. R., "Penetration Depth Investigation of Gas Cleanup with Radioactive Tracers," J. Appl. Phys., 31, 445 (1960).

During investigation of some special problems connected with gas discharge tubes, data on depth of penetration of cleaned-up gases were obtained using krypton-85 as a tracer. A graph of krypton-85 density vs penetration depth is given.

10. Barton, R. S., "The Permeability of some Plastic Materials to H_2, H_e, N_2, O_2, and A," A.E.R.E.-M 599, 1960.

The study of permeability of plastic materials was undertaken as part of a programme to determine which were most suitable for use in the construction of high vacuum systems. The permeability of polythene, Nylons, polyvinyltoluene, and polystyrene to the gases cited in the title was determined in a high-vacuum system.

11. Bearman, Richard J., and Koenig, Frederick O., "Thermo-Osmosis of Rare Gases through a Rubber Membrane," J. Am. Chem. Sci., 78, 691 (1956).

The thermo-osmosis through a rubber membrane of carbon dioxide and all the rare gases except radon was observed, and from experimental data the heats of transfer Q* and the permeabilities p were calculated.

12. Berg, T. G. Owe, "Kinetics of Hydrogen Absorption, Desorption, and Permeation of Metals," Corrosion, 14, No. 12, 562 (1958).

The reaction mechanisms the absorption of hydrogen by metals from moist hydrogen gas and dilute acid solutions, for the desorption from metals of dissolved hydrogen in the presence of water and for hydrogen solubility and permeation under those conditions is discussed; their kinetics are also given.

13. Bhargava, R., Rogers, C. E., Stannett, V., and Szwarc, M., "Studies in the Gas and Vapor Permeability of Plastic Films and Coated Papers. Part IV. "TAPPI, 40, 564 (1957).

The gas and vapor permeabilities of a number of plastic films and coated papers have been measured at various temperatures and pressures. The effect of the paper substrate has been investigated using coatings of several thicknesses. The effect of exposing the paper side or the plastic side to the humidity has been studied for several systems.

14. Bills, D. G., and Carleton, N. P., "Adsorption of Activated Gases," J. Appl. Phys., 29, 692 (1958).

The adsorption of gases activated by electron bombardment has been investigated theoretically and experimentally. From postulates concerning probabilities of adsorption and deactivation for activated molecules in collision with surfaces an expression is derived giving the rate of adsorption in terms of these probabilities and of the amount of activated gas already adsorbed on the surfaces.

15. Boomer, E. H., "Experiments on the Chemical Activity of Helium," Proc. Roy. Soc. (London), A109, 198 (1925).

Experiments have been made with an intense electronic discharge from a tungsten filament in helium at low pressures, which led to the belief that a distinct and stable compound of the formula WHe_2 exists. Evidence has also been obtained that helium unites with the vapours of mercury, iodine, phosphorus, and sulphur to

form compounds which are stable only at low temperatures.

16. Bradley, R. Stevenson, "The Compounds of the Inert Gases," Science Prog., 31, 282 (1936).

An historical summary of the experiments conducted on the synthesis of co-ordination compounds of the inert gases.

17. Brandt, Wilfred W., "The Effect of Polymer Density on the Diffusion of Ethane in Polyethylene," J. Polymer Sci., 41, 403 (1959).

Diffusion and solubility coefficient were determined by the time-lag method for ethane and some other low hydrocarbons in various polyethylenes. Diffusion and solubility coefficients both depend quite strongly on the density and hence on the crystallinity. There is no discernible effect of weight-average molecular weight, and the effect of polymer chain side branches is found to be small or absent.

18. Brubaker, David William, and Kammermeyer, Karl, "Separation of Gases by Plastic Membranes," Ind. Eng. Chem., 46, 733 (1954).

Data on permeability of four plastic membranes to helium and several common gases were obtained. Most of the gas permeabilities increased exponentially with an increase in temperature. Separation data obtained with mixtures of gases or mixtures of gases and vapors agreed with calculated data based upon experimental permeability data. The plastic membranes were shown to be an efficient nonporous medium for the separation of gases.

19. Carmichael, J. H., and Trendelenburg, E. A., "Ion Induced Reemission of Noble Gases from a Nickel Surface," J. Appl. Phys., 29, 1570 (1958).

Each of the noble gases, He, Ne, A, and Kr, has been ionically pumped with an energy of about 100 ev into a nickel target and has been subsequently released by a similar bombardment using

a different noble gas. Saturation of the depth distribution has been observed for Ne, A, and Kr at concentrations below one equivalent monolayer while He showed no such effects at the highest concentration used, which corresponded to approximately 15 equivalent monolayers.

20. Carpenter, L. G., and Mair, W. N., "The Sorption by Titanium of Oxygen and Nitrogen at Low Pressures," J. Inst. Metals, 88, 38 (1959-60).

The rate of sorption, at pressures of the order of 0.1μ Hg, of oxygen by titanium has been measured by a continuous-flow technique. A closed-volume technique was used to measure the kinetics of the titanium/nitrogen reaction at pressures of the order of 1μ Hg. The main purpose was to obtain a knowledge of the probability per impact that an impinging oxygen or nitrogen molecule would react with the hot titanium.

21. Cochran, C. N., "The Permeability of Aluminum to Hydrogen," J. Electro-chem. Soc., 108, 317 (1961).

The permeability constant for hydrogen in aluminum at 500°C was found to be sensitive to surface films. The constant varied over a four hundred-fold range in normal hydrogen atmospheres and over a thousand-fold range in the presence of a glow discharge.

22. Crowell, Albert D., "The Adsorption of Gases on Metal Filaments, Films, and Single Crystals," Am. J. Phys., 20, 89 (1952).

This paper presents the concepts involved in the study of adsorption of gases on solids. Particular stress is placed on the problem of uniform surfaces. An historical study follows which is specifically concerned with (1) metal filaments and evaporated films and (2) surfaces of metal single crystals.

23. Damianovich, H., "Recherches sur l'inertie et l'activite chimique des gaz rares," Soc. Chimique de France, Memoires, 1085 (1938).

The author reviews 13 years of work on the synthesis and study of compounds of the rare gases, particularly platinum helide; the compounds were made by the action of rare gases on cathodically-pulverized metals.

24. Denbigh, K. G., and Raumann, Gertrud, "The thermo-osmosis of gases through a membrane I. Theoretical," Proc. Roy. Soc. (London), A210, 377 (1952).

The thermo-osmosis of a gas through a membrane in which it is slightly soluble is due partly to the temperature coefficient of its solubility and partly to the existence of a thermal diffusion process inside the membrane. A theory is developed on the basis of Onsager's treatment of irreversible processes and leads to equations giving the rate of permeation and the pressure ratio at the stationary state.

25. Denbigh, K. G. and Raumann, Gertrud, "The thermo-osmosis of gases through a membrane. II. Experimental," Proc. Roy. Soc. (London), A210, 518 (1952).

An apparatus is described for the measurement of the thermo-osmotic effect of carbon dioxide, nitrogen, hydrogen, and water vapour through a natural rubber membrane. The existence of the effect is demonstrated in all four cases. The calculated values of the heat of transport are discussed with special reference to a molecular-kinetic theory of diffusion in quasi-crystalline lattices.

26. DeRosset, A. J., "Diffusion of Hydrogen through Palladium Membranes," I & E Chem., 52, 525 (1960)

In the work described here, it was found that hydrogen diffuses selectively through an 0.8-mil thick supported palladium

membrane at rates over 250 standard $ft^3/hr/ft^3$ at 850°F and a pressure drop of 400 psi. Diffusion rate is proportional to pressure drop at low pressures and linear with the difference between the 0.8 power of pressure at high pressures.

27. Dietrick, Harry J., and Meeks, Wilkison W., "Permeability of Various Polymers to 90% Hydrogen Peroxide," J. Appl. Polymer Sci., 2, No. 5, 231 (1959).

A method suitable for measuring the steady state diffusion rate of 90% hydrogen peroxide was developed. The permeabilities of various polymers were determined both at room and elevated temperatures. Compatibility tests with polymers in this reagent were made prior to the permeability measurements as a safety measure and for screening purposes.

28. Doty, Paul M., Aiken, W. H., and Mark, H., "Temperature Dependence of Water Vapor Permeability," Ind. Eng. Chem., 38, 788 (1946).

The temperature dependence of the permeability of several polymer films to water vapor has been determined, with results showing a wide range of behavior in this respect. The resolution of permeability into products of diffusion and solution has been verified for the system water-polyvinyl chloride.

29. Dushman, Saul, "Vacuum Techniques," John Wiley & Sons, New York, 1949, Ch. 9, Sec. 10, pp. 607-19.

The mechanisms of the diffusion of gases through metals are discussed in a sound, well-referenced review.

30. Ehrlich, Gert, and Hickmott, T. W., "Adsorption Spectrum of Nitrogen on Tungsten," Nature, 177, 1045 (1956).

Nitrogen is simultaneously absorbed on tungsten in different states of binding. This letter discusses the concentration of the adsorbed entities as a function of sorbent temperature

in order to define the spectrum of binding energies of the molecular species adsorbed on the surface.

31. Emslie, A. G., "Effect of Gas Diffusing from Tank," A. D. Little, Inc., Rept. No. 63270-04-01, April 1961, p. 15-16.

A mathematical treatment of the minimum heat flux vs rate of diffusion from a fuel tank in a space vehicle.

32. Fast, J. D. and Verrijp, M. B., "Diffusion of Nitrogen in Iron," J. of Iron and Steel Inst., 176, 24 (1954).

Diffusion coefficients of nitrogen in α-iron at 500° and 600°C are derived from the desorption rates of nitrogen from iron wires in hydrogen, using internal friction measurements to determine concentration ratios.

33. Frank, Robert C., "Some Observations Regarding the Present Status of Measurements of the Diffusion Coefficients of Hydrogen in Iron and Mild Steel," J. Appl. Phys., 29, 1262 (1958).

A discussion of the reasons for two sets of diffusion rates for hydrogen in mild steel. (See reference 36.)

34. Frank, Robert C., "Gases-in-Solids," Internatl. Sci. and Tech., September 1962, p. 53.

A general discussion on the permeation of gases in solids including techniques of measurement, the effect of gas permeation on materials such as metals, polymers, and semiconductors, and the importance of these effects in space applications.

35. Frank, Robert C., Lee, Robert W., and Williams, Robert L., "Ratio of the Diffusion of Hydrogen and Deuterium in Steel," J. Appl. Phys., 29, 898 (1958).

The ratio of the diffusion coefficients for hydrogen and deuterium in steel have been measured in the temperature range of 26°C to 86°C. The diffusion coefficients were measured

simultaneously for the two using the mass spectrometer to observe the rate of evolution of the gases from the steel.

36. Frank, Robert C., Swets, Don E., and Fry, David L., "Mass Spectrometer Measurements of the Diffusion Coefficient of Hydrogen in Steel in the Temperature Range of 25°-90°C," J. Appl. Phys., 29, 892 (1958).

A mass spectrometer was used to study the movement of hydrogen through thin steel plates. Two methods of measuring diffusion were used; the rate of approach to equilibrium when hydrogen is supplied to the plate, and the rate of outgassing when the source of hydrogen is removed. Two decidedly different sets of diffusion coefficients were obtained.

37. Frisch, H. L., "Gas Permeation through Membranes due to Simultaneous Diffusion and Convection," J. Phys. Chem., 60, 1177 (1956).

Measurements of the rate of gas transmission, particularly the time lag, under various applied pressure gradients can be shown to yield, besides the value of the diffusion constant, the gas solubility, the specific convection velocity of the gas as well as other parameters, characteristic of the permeation mechanism, information concerning the membrane porosity (and thus something of the structure).

38. Gulbransen, Earl A., and Andres, Kenneth F., "Kinetics of the Reactions of Titanium with O_2, N_2, and H_2," Metals Trans., 185, 741 (1949).

A study of the kinetics of the reactions of titanium with O_2, N_2, and H_2 is presented. The work with the nitrogen shows that the nature of the reaction is believed to be one involving the solution of nitride into the metal under the conditions of a nitride film present on the surface. The reaction with hydrogen obeys the square root of pressure law, and the

hydrogen is probably diffusing into the titanium lattice as atoms.

39. Hare, Ernest F., "A Study of the Encapsulation of High Energy Substances," NCR Interim Rept. No. 1 under Contract No. NOnr-2848(00), July, 1960.

A discussion of the apparatus and the results of permeability studies on several polymers with helium and water as the penetrants.

40. Harris, J. T., and Stimler, F. J. "Expandable Structures for Space," Astronautics, 6, No. 4, 30 (1961).

Discussion of expandable structures, such as balloons or space stations, including description of the permeability apparatus used for polymeric coatings to be applied to various fabrics, metals, or glass.

41. Heller, Ralph, "Theory of some Van der Waals Molecules," J. Chem. Phys., 9, 154 (1941).

The vibrational wave number and energy of dissociation of the molecules HgHe, HgNe, HgA, HgKr, HgXe, Hg_2, $(O_2)_2$, and $(NO)_2$ in the normal state are calculated.

42. Henderson, R., and Wallace, G. A., "A Simple Apparatus for Determining Gas Permeability of Flexible Films," Food Tech., 10, 636 (1956).

A simple, inexpensive apparatus for determining the gas permeability of flexible packaging films has been designed. It is essentially the same manometer system as is generally used, but employs a modified bacteriological pressure filter as the permeability cell. Results are equivalent to published data for some polymers, but the apparatus is not recommended for exacting research work.

43. Hobson, J. D., "The Diffusion of Hydrogen in Steel at Temperatures of -78° to 200°C," Iron and Steel Inst. J., 189, 315 (1958).

Using specimens cut from large forgings, it is shown that the diffusion of hydrogen in steel does not follow the predictions of the accepted exponential equation at temperatures below about 150°C. The diffusion constant at a given temperature varies from steel to steel, but the square law relating rate of evolution and specimen diameter is followed approximately.

44. Hsieh, Paul Y., "A Study of the Encapsulation Applicable to Liquid Rocket Fuel," NCR Interim Report No. 2, January 1961, on Contract No. NOnr 2848(00).

The results of permeability measurements of nitrocellulose and ethylcellulose to a large number of gases is given.

45. Huffine, C. L., and Williams, J. M., "Hydrogen Permeation Through Metals, Alloys and Oxides at Elevated Temperatures," Corrosion, 16, No. 9, 430t, (1960).

Permeation rates of hydrogen through a stainless steel and an iron alloy were determined to 2150°F under varying conditions of surface oxidation. The presence of a continuous oxide film resulted in a thousandfold reduction in permeation rate over that through the unoxidized metal at elevated temperatures. Under conditions in which the oxide could not be replenished, its barrier effect was largely destroyed through reduction of the oxide by the emerging hydrogen.

46. Ingersoll, L. R., and Hanawalt, J. D., "The Gas Content, Crystal Structure, and Hydrogen Absorption of Sputtered Nickel Films," Phys. Rev., 34, 972 (1929).

Films of nickel have been sputtered in residual atmospheres of hydrogen, helium, nitrogen, and argon, and their gas content investigated. This is large, though in general not reaching

one molecule per atom of metal. Upon heating the gas is emitted copiously at 300°-400°C, which is just the baking temperature for which such films become magnetic and also much better conducting. As permeability is supposed to be a rapid inverse function of atomic distance it seems probable that the gas, by keeping the atoms apart, is primarily responsible for the abnormal magnetic and other properties of such films, although it is impossible to separate this effect entirely from the factor of crystal structure.

47. Jaumot, F. E., Jr. USAEC Report No. TID-3071, 1958.

A bibliography of diffusion of gases, liquids, and solids in solids, 1890 to 1955.

48. Jordan, John R. and Young, Roy, "The Hard Facts of Hard-Vacuum Seals," Research/Development, 12, 74 (1961).

A discussion is presented of elastomers for use in space applications; some air permeability data are given.

49. Jost, W., "Diffusion in Solids, Liquids, Gases," Academic Press, Inc., New York, 1952.

50. Jupa, J. A., "Fluorocarbon Plastics Today," Product Eng., October 1954, p. 168.

A discussion of the physical and mechanical properties, including some permeability data, is presented for fluorocarbon polymers.

51. Kammermeyer, Karl, "Vapor Transfer through Barriers," Ind. Eng. Chem., 50, 697 (1958).

The vapor transfer through barriers can be satisfactorily correlated by the condensed flow (expressed in flow per unit time and area, divided by the pressure drop, Δp) as a function of both the concentration of the adsorbed (or dissolved) vapor

and the concentration gradient created by the adsorption process. The condensed flow is the difference between total flow and the flow in the gaseous phase through the open pores of the structure. A scheme is proposed for the ready determination of characterization factors which, in turn, will determine type of correlation that should be used.

52. Kammermeyer, K., and Wyrick, Darrell D., "Effect of Adsorption in Barrier Separation," Ind. Eng. Chem., 50, 1309 (1958).

Experiments have shown that components of essentially equal molecular weight can be separated on the basis of differences in adsorption on a microporous barrier. Mixtures of propane and carbon dioxide gave appreciable enrichment in propane, the more condensable component, entirely on the basis of adsorbed flow.

53. Keesom, W. H., "Helium," Elsevier, Amsterdam, 1942, pp. 125-32.

The solubility, sorption, and diffusion of helium through solid substances is discussed.

54. Klute, C. H., and Franklin, P. J., "The Permeation of Water Vapor through Polyethylene," J. Polymer Sci., 32, 161 (1958).

A critical survey of the literature has been made relative to the permeation of water vapor through films of polyethylene. The expectation exists that a superior water-vapor barrier could be developed using ultralinear, crystalline polyethylene of high molecular weight. However, an incisive experimental test of this supposition would first have to be concerned with a more complete characterization of polyethylene in the solid state than has heretofore been employed in diffusion and permeability studies.

55. Koch, J., "Mass Spectrographic Separation of Isotopes of Gaseous Elements," Nature, 161, 566 (1948).

Experiments have shown that bombardment of silver disks with beams of ions of neon at energies of about 60 kev can result in penetration of the silver of the neon ions to depths of about 100 atomic diameters.

56. Krivetsky, A., et al., "Final Report. Research on Zero-Gravity Expulsion Techniques," Bell Aerosystems Co., Report No. 7129-933003, March 1962, p. 196-206.

The results of permeability constants determined by use of a high-vacuum system are presented; materials studied are Teflons, nickel, and tin with air, mixed oxides of nitrogen, and UDMH.

57. Lasoski, S. W., Jr., Cobbs, W. H., Jr., "Moisture Permeability of Polymers. I. Role of Crystallinity and Orientation," J. Polymer Sci., 36, 21 (1959)

With three polymers widely different in polarity - polyethylene terephthalate, polyethylene, and Nylon 610 - the water vapor permeability P of unoriented films has been shown to increase as the amorphous fraction X_a is increased, following the relation $P = P_a X_a^2$. For polyethylenes, adherence to this relation is exhibited only with structures having densities above 0.94, a range in which the number of short chain branches is low.

58. Leck, J. H., "The Bombardment of Surfaces by Positive Ions," Chemisorption, Proc. Symp. Keele, 1956, pp. 162-68.

Observations on the adsorption of positive ions with energies up to 5000 eV on to the surfaces of nickel, tungsten, aluminum, and molybdenum are described. The results show physical adsorption of the inert gases at metal surfaces with a high heat of desorption, the molecules being held tightly at temperatures up to 700°K.

59. Leck, J. H., "Adsorption and Desorption of Gases in the Ionized State on Metal and Glass Surfaces," Advances in Mass Spectrometry, Permagon Press, New York, 1959, pp. 547-58.

This paper describes experiments carried out to measure the adsorption characteristics of gas ions on metals and glass surfaces. The work has been limited almost entirely to ions of the inert gases helium, neon, argon, and krypton with a small number of experiments in nitrogen and oxygen.

60. LeClaire, A. D., and Rowe, A. H., "The Diffusion of Argon in Silver," A.E.R.E. M/R 1417, 1957.

The diffusion coefficient of argon in silver was determined by annealing samples of silver, charged with argon by bombardment with argon ions in a discharge tube, and measuring the amount of argon released after a known time. The diffusion coefficient at temperature T is given by D = 0.12 Exp(-33,600/RT)cms /sec. D is of the same order as the diffusion coefficient of other elements in silver, but slightly larger because of the argon atom compared with that of these other elements.

61. Leiby, C. C., Jr. and Chen, C. L., "Diffusion Coefficients, Solubilities, and Permeabilities for He, Ne, H_2, and H_2 in Vycor Glass," J. Appl. Phys., 31, 268 (1960).

The permeability of a Vycor filter is given for helium at six temperatures ranging from 299°K to 723°K, for neon and hydrogen at 673°K and 723°K, and for nitrogen at 673°K. On the basis of the observed permeation rates for the above gases, it is estimated that the filtered helium has an impurity content of less than 1/50 of its unfiltered value.

62. Libowitz, George G., "Effect of Thermal Gradients on Metal-Gas Systems," J. Phys. Chem., 62, 296 (1958).

The distribution of a gas dissolved in a metal under a thermal gradient and constant pressure is considered. An expression for the concentration gradient is derived. The effect of compound formation on the distribution and on the shape of pressure-composition isotherms is discussed.

63. Lundberg, J. L., Wilk, M. B., and Huvett, M. J., "Solubilities and Diffusivities of Nitrogen in Polyethylene," J. Appl. Phys., 31, 1131 (1960).

This note summarizes some of the methods and results, kinetic and equilibrium, of a sorption study of nitrogen into polyethylene at elevated pressures (up to 700 atmospheres).

64. Meyer, J. A., Rogers, C., Stannett, V., and Szwarc, M., "Studies in the Gas and Vapor Permeability of Plastic Films and Coated Papers. Part III. "TAPPI, 40, 142 (1957).

The permeability constants of a number of plastic films have been measured for nitrogen, oxygen, and helium. The measurements were made both with the gases in the pure state and mixed with varying amounts of carbon dioxide. When adequate mixing of the gases was ensured, no differences in the permeability constants were found between the pure and the mixed gases.

65. Michaels, A. S., and Parker, R. B., Jr., "Sorption and Flow of Gases in Polyethylene," J. Polymer Sci., 41, 53 (1959).

Solubilities and diffusivities of N_2, O_2, and He in a variety of polyethylenes were measured in the range 0-50°C. Diffusivities were determined by the time-lag method; solubilities by time-lag and also by a newly developed and more accurate static method.

66. Myers, A. W., Meyer, J. A., Rogers, C. E., Stannett, V., and Szwarc, M., "Studies in the Gas and Vapor Permeability of Plastic Films and Coated Papers. Part VI, "TAPPI, 44, 58 (1961).

The permeability of a number of plastic films to water vapor has been investigated as a function of temperature and vapor pressure. Two general types of behavior were noted where the permeability constant is (a) dependent and (b) independent on vapor pressure.

67. Myers, A. W., Rogers, C. E., Stannett, V., and Szwarc, M., "Studies in the Gas and Vapor Permeability of Plastic Films and Coated Papers. Part V. "TAPPI, 41, 716 (1958).

The effect of crystallinity on the gas and vapor permeability of plastic films was tudies with special reference to polyethylene. The permeability was found to steadily decrease with increasing crystallinity. A number of explanations to explain this behavior are advanced and the relationship between crystallinity and permeability explored in some detail.

68. Myers, A. W., Rogers, C. E., Stannett, V., and Szwarc, M. "The Permeability of Some Graft Copolymers of Polyethylene to Gases and Vapors," J. Appl. Polymer Sci., 4, No. 11, 159 (1960).

Graft copolymers of polyethylene were prepared by gamma irradiation of polyethylene films immersed in the appropriate monomer. The majority of gas permeability measurements were made by Barrer's high vacuum technique; others were made by measuring volumetric change as a function of time. The data show clearly that permeation through acrylonitrile and vinylpyridine-polyethylene grafts is primarily a diffusion process, while in permeation through polyethylene-styrene grafts, there is also a crystallite solution effect.

69. Myers, A. S., Rogers, C. E., Stannett, V., and Szwarc, M., "Permeability of Polyethylene to Gases and Vapors," Modern Plastics, 34, 157 (1957).

A summary of the data accumulated by the authors is presented.

70. Myers, A. W., Stannett, V., and Szwarc, M., "The Permeability of Polypropylene to Gases and Vapors," J. Polymer Sci., 35, 285 (1959).

The permeability constants for nitrogen, oxygen, carbon dioxide, and water (vapor and liquid) are presented; permeability constants of methylbromide through polypropylene at a number of temperatures and pressures are also given.

71. Myers, A. W., Tammela, V., Stannett, V., and Szwarc, M., "Permeability of Chlorotrifluroethylene Polymers," Modern Plastics, 37, 139 (June 1960).

The permeability of a number of modifications of chlorotrifluoroethylene polymers to gases (N_2, O_2, and CO_2) and vapors (water and methanol) has been investigated. The effects of crystallinity, plasticization, and copolymerization with vinylidene fluoride are considered.

72. Nagel, B. H., "Annotated Bibliography on Permeation of Gases through Solids," Autonetics, Report EM-5883, 12 October 1959.

Emphasis is placed upon information concerning the gases, hydrogen and helium, and the solids, metal and glass. Data on many other gases and solids is also included. The literature search includes publications from 1900 to June, 1959. 352 references.

73. Norton, Francis J., "Helium Diffusion Through Glass," J. Am. Ceramic. Soc., 36, No. 3, 91 (1953).

Using the mass spectrometer as an analytical tool and as a means of rate measurement, the rates of helium diffusion through nine types of glass were measured. The temperature range covered was from -80° to 600°C. The highest rates were for fused silica and Vycor brand glass; the lowest were for the lead glasses.

74. Norton, Francis J., "Rare Gas Permeation Through Polymers," J. Chem. Phys., 22, 1145 (1954).

The permeation of helium and xenon through several rubbers was determined mass spectrometrically. Some unexpected high results for xenon are attributed to the solubility factor predominating over the diffusion factor.

75. Norton, Francis J., "Permeation of Gases Through Solids," J. Appl. Phys., 28, 34 (1957).

The permeation processes are here considered for polymers, metals, and glasses. The probable steps in the permeation process are discussed. Mass spectrometer techniques and application to the measurement of very low permeation rates are presented, and a set of criteria for making reliable permeation measurements are formulated.

76. Othmer, Donald F., and Frohlich, Gerhard J., "Correlating Permeability Constants of Gases through Plastic Membranes," Ind. Eng. Chem., 47, 1034 (1955).

A new method of plotting the permeability constant of a gas versus the vapor pressure of a reference substance is given, and the thermodynamic relation is discussed. A nomogram for permeability constants of films by gases at different temperatures is presented.

77. Park, W. R. R., "Semimicro Gas Permeability Apparatus for Sheet Material," Anal. Chem., 29, 1897 (1957).

The apparatus described is accurate to about ± 5%, but is considered representative of actual permeability values because of the small size of sample required (about 3/4-inch diameter). The increase in pressure due to permeating gas is measured by the movement of a methyl isobutyl ketone slug along an horizontal manometer.

78. Parmelee, H. M., "Permeability of Plastics Films to Refrigerant 12 and Nitrogen," Refrig. Eng., 66, No. 2, 35 (1958).

Results are presented for the permeability of single and laminated plastics films to O_2, N_2, and Refrigerant 12. Data indicate that aluminized Mylar polyester film and polyvinyl alcohol film show promise for refrigeration insulation.

79. Powell, H. M., "The Chemistry of Intermolecular Compounds," J. Chem. Soc., 1954, 2658

A discussion is given of crystalline intermolecular compounds, including those of the rare gases. The presentation deals with combining proportions, the properties and conditions of formation of the intermolecular compound, and its stability and energy relationship to the components.

80. Prager, Stephen, "The Calculation of Diffusion Coefficients from Sorption Data," J. Chem. Phys., 19, 537 (1951).

A method is described for the calculation of the dependence of the diffusion coefficient on the concentration of diffusing material from data obtained by studying the rates of sorption of vapors by films. The method has been tried out for the sorption of isobutane by polyisobutylene at 35°C and found to be quite satisfactory.

81. Roe, William P., Palmer, Howard R., and Opie, William R., "Diffusion of Oxygen in Alpha and Beta Titanium," Am. Soc. for Metals, Trans., 52, 191 (1960).

Diffusivities of oxygen in alpha and beta titanium were determined using microhardness data as measures of oxygen content for Ti75A cylidders oxidized in TiO_2 powder at temperatures of 700-1150°C.

82. Rogers, C., Meyer, J. A., Stannett, V., and Szwarc, M., "Studies in the Gas and Vapor Permeability of Plastic Films and Coated Papers. Part I," TAPPI, 39, 737 (1956).

Details are given of a method to measure the permeability constant in an absolute way and to yield other data capable of systematic interpretation. The method is based on the high-vacuum technique developed by R. M. Barrer.

83. Rogers, C., Meyer, J. A., Stannett, V., and Szwarc, M., "Studies in the Gas and Vapor Permeability of Plastic Films and Coated Papers. Part II." TAPPI, 39, 741 (1956).

The theory of gas and vapor permeability through plastic films is discussed and the permeability shown to be the product of the solubility coefficient and the diffusion constant. The influence of temperature and pressure on the permeability constant is discussed together with a number of molecular structural factors.

84. Rogers, C. E., Stannett, V., and Szwarc, M., "Studies in the Gas and Vapor Permeability of Plastic Films and Coated Papers. Part VII." TAPPI, 44, 715 (1961).

Certain aspects of the permeability, P, diffusivity, D, and solubility, S of organic vapors in polymers, especially polyethylene, have been summarized to illustrate the dependence of these phenomena on the characteristics of the polymer-penetrant system.

85. Rogers, C. E., Stannett, V., and Szwarc, M., "Permeability Valves," Ind. Eng. Chem., 49, 1933 (1957).

The permeability of gases and vapors through composite membranes is discussed. It is shown that membranes can be constructed so that rate of permeation depends on direction of flow and they may be of value as permeation "valves."

86. Rosen, Bernard, "A Recording Sorption Kinetics Apparatus," J. Polymer Sci., 35, 335 (1959).

Automatic recordings of the rates of sorption and desorption of gases are obtained by measurement of the volume of the ambient gas under conditions of constant pressure and temperature. The apparatus, which approaches microgram sensitivity, is applicable in the field of diffusion of vapors in polymeric solids (and in obtaining the permeability coefficient).

87. Rudd, D. W., Vose, D. W., and Johnson, S., "The Permeability of Copper to Hydrogen," J. Phys. Chem., 65, 1018 (1961).

The apparatus used in this study is discussed. The membrane is a thin disc, but is an integral part of an entire membrane assembly; the entire unit is one piece, being machined from a solid ingot of metal stock. Permeability constants are given for hydrogen through copper from temperatures of 350° to 500°C.

88. Rudd, D. W., Vose, D. W., and Vetrano, J. B., "The Permeation of Hydrogen through Hastelloy B," Atomics Internatl., Report NAA-SR-4898 Rev., February 15, 1961.

The flux of hydrogen gas through Hastelloy B, hot forged to 20% reduction, was determined as a function of membrane thickness, pressure differential, and temperature. The membrane assembly was constructed as in Reference No. 87.

89. Russell, Allen S., "Diffusion of Hydrogen through Aluminum Tubes," Metals Prog., 55, 827 (1949).

The rate of hydrogen diffusion through a particular type of aluminum tube has been measured at temperatures from 100-500°C

and pressures from 1 to 75 cm of Hg. The rate was found to change rapidly with time at moderate temperatures. The sample crystallized and considerable grain growth occurred during these measurements. The rate was increased more than five-fold when a high-voltage discharge was passed through the hydrogen. The diffusion of oxygen at 1 atm. at 500° was immeasurably low. A diffusion of helium in a single run at 500°C and 1 atm was indicated.

90. Salame, Morris, "The Prediction of Liquid Permeation in Polyethylene and Related Polymers," SPE Trans., October 1961, p. 153.

It is shown that the permeability of organic liquids can be accurately predicted if the chemical composition of the permeant is known. Size, shape, polarity and interaction forces are taken into account in determining this quantity. A table of calculated and experimental results for 79 organic compounds in regular polyethylene is given.

91. Sarge, T. W. "Determination of Gas Permeability of Saran Films," Anal. Chem., 19, 396 (1947).

A modified manometric apparatus for measuring gas permeabilities of films having extremely low transmission characteristics is described. Experimental results of equilibrium transmission for Saran films measured by a variable pressure technique are reported. Over-all results for Saran film gas transmissions are lower than those generally encountered in the literature for any organic material.

92. Schulz, G. V., and Gerrens, H., "Diffusion und Kapillarstromung indifferenter Gase im glasartigen Polystyrol," Z. Physik. Chem., Neue Folge, Bd. 7, 182-206 (1956).

The rate of absorption of gases of small particles of polystyrol was measured. The evaluation of the absorption curves according

to the equations of Dunwald and Wagner shows that the process consists of two superimposed plots, the first type is finished after a few minutes and has an apparent diffusion constant of the order of magnitude of 10^{-15} cm/sec, while the second lasts for days and has a diffusion constant of several orders of magnitude smaller.

93. Singh, Rudra Pal, and Band, William, "The Anomalous Monolayer Adsorption of Helium," J. Phys. Chem., 59, 663 (1955).

The paper reports an attempt to understand the anomalously high density in the first monolayer of helium adsorbed on solid surfaces in terms of the Lennard-Jones model, by taking into account the fact that the forces causing adsorption perturb the helium atom wave function and so modify the interaction between neighboring helium atoms.

94. Stormer, W. C., "Compatibility of Freon 114 used in Mercury Support Equipment with Various Hose Materials," Aerospace Eng., June 1961, p. 28+.

Several hose materials were checked for compatibility with Freon 114, and Teflon was found to have the best characteristics. Permeability tests were run on the Teflon; the results indicated that a rapid sorption of the Freon took place until saturation condition was reached, and then the permeability rate was quite small and was adequate for the purpose.

95. Stout, Lawrence E., Geisman, Raymond, and Mozley, James M., Jr., "Diffusivity of Gases through Synthetic Elastomer Diaphragms," Chem. Eng. Prog., 44, No. 3, 219-28 (1948).

The apparatus used in these determinations was a constant-flow type which utilizes combustion analysis to determine the quantity of hydrocarbon gases which has passed through the membrane. Data is presented for 21 polymers to hydrogen and several hydrocarbon gases.

96. Stout, Virgil L., and Gibbons, Martin D., "Gettering of Gas by Titanium," J. Appl. Phys., 26, 1488 (1955).

Titanium metal has been studied as a getter for oxygen, nitrogen, carbon dioxide, air, water vapor, hydrogen, and methane. Large quantities of gases can be sorbed; sorption of ten to ninety atom percent is possible. Hydrogen gas is the only gas which can be released by heating after it has been sorbed by titanium.

97. Tucker, C. W., Jr., and Norton, F. J., "On the Location and Motion of Rare Gas Atoms in Metals," J. Nuclear Materials, 2, No. 4, 329 (1960).

Using potentials of about 40 kV, rare gas ions were accelerated into metal films and foils. In spite of the fact that as much as 2 at-% argon was loaded into the metal lattice, little or no X-ray effect due to lattice distortion was observed. This result suggests that rare gas atoms coming to rest in a metal lattice capture vacancies. The evolution of gas on heating the metal was measured mass spectrometrically. The combination of the ion bombardment and mass spectrometer techniques appears very promising for the study of the behaviour of rare gases in crystals.

98. VanAmerongen, G. J., "The Permeability of Different Rubbers to Gases and Its Relation to Diffusivity and Solubility," J. Appl. Phys., 17, 927 (1946).

The permeability of a membrane was measured manometrically and the diffusivity was derived from the time-lag of the permeation. The solubility was computed from the permeability and the diffusivity, in addition to which the solubility was also found by direct measurement. Eight different gases were tested with 9 elastomers at different temperatures. Differences in permeabilities due to differences in solubility and/or diffusivity rates are discussed.

99. Van der Walls, "The Statistical Mechanics of Clathrate Compounds," Far. Soc. Trans., 52, 184 (1956).

A statistical mechanical formulation is given of the crystalline compounds formed between quinol and nonpolar gases, as studied by Powell. The general form of the partition function of such a clathrate crystal is discussed, in the first place without specifying the potential field within the cavities holding the gas. The corresponding expressions for the chemical potentials of the two constituents are given and some thermodynamic conclusions are drawn.

100. Von Gentner, W., and Trendelenburg, E. A., "Eine massenspektrometrische Methode zur Bestimmung der Diffusionskonstanten von Gasen in Festkorpern," Z. Naturforschg. 9a, 802 (1954).

The diffusion constant for helium in a single sodium chloride crystal was determined mass spectrometrically. The crystal was pulverized, soaked in a mixture of helium and air at high temperature, cooled, and evacuated. Then the powder was heated and the helium which was given off was measured directly in the mass spectrometer.

101. Vango, Stephen P., "Determination of Permeability of Cast Teflon Sheet to Nitrogen Tetroxide and Hydrazine," JPL Tech. Memo. No. 33-55, August 25, 1961.

The apparatus for determining the permeability of hydrazine or nitrogen tetroxide through Teflon is described; the liquids were placed on the Teflon membrane and pressurized with nitrogen. The permeating gases were collected in cold traps and the quantity of material determined by titration.

102. Varnerin, L.J., and Carmichael, J.H., "Trapping of Helium Ions and the Re-Emission of Trapped Atoms from Molybdenum," J. Appl. Phys., 28, 913 (1957).

The electrical clean-up of helium on molybdenum surfaces has been investigated. Measurements of the trapping efficiency have been made over a range of ion energies from °50 to 2600 eV.

103. Waack, Richard, et al., "Permeability of Polymer Films to Gases and Vapors," Ind. Eng. Chem., 47, 2524 (1955).

The permeability constants of nitrogen, oxygen, and carbon dioxide for a number of polymer films were calculated from the measured gas transmission. The data for the permeation of nitrogen through polyethylene show the permeability constant to be independent of pressure and film thickness; the permeability constants of ethylene oxide and methyl bromide were found often to be dependent on the pressure of vapor used.

104. Wasilewski, R.J. and Kehl, G.L., "Diffusion of Nitrogen and Oxygen in Titanium," J. Inst. Metals, 83, 94 (1954-1955).

The diffusion rates in massive beta-titanium, and their temperature-dependence, have been determined for nitrogen in the range 900°-1570°C, and for oxygen in the range 950°-1414"C, assuming D to be independent of the solute concentration. This appears probable in the case of nitrogen throughout the solubility range in beta-titanium; diffusion rates for oxygen, however, appear to decrease at higher solute concentrations.

105. Wasilewski, R.J. and Kehl, G.L., "Diffusion of Hydrogen in Titanium," Metallurgia, 50, No. 11, 225 (1954).

This paper describes the investigation of hydrogen diffusion in alpha and beta titanium and observations on the reaction rates incidental to the diffusion work. A simplified method

for the vacuum extraction analysis of hydrogen in high-purity titanium is briefly outlined.

106. Young, J. R. "Penetration of Electrons and Ions in Aluminum," J. Appl. Phys. 27, 1 (1956).

The depth of penetration of 0.5- to 11-kev electrons and 1- to 25-kev H^+, H_2^+, and He^+ ions in aluminum has been measured. The sample film was prepared in the form of an aluminized phosphor, and detection of transmitted electron or ion energy was accomplished by measuring luminescence.

PRESSURE VESSELS

1. Anderson, Oiva R., "Some Considerations of Structural Design Criteria for Guided Missiles," WADC TR 58-196, February 1959.

An heuristic analysis has been performed of some problem areas which will have to be considered in the development of structural design criteria for quided missiles. The problem areas which have been analyzed are: a rational safety factor based on reliability concepts, atmospheric turbulence and gust analysis, atmospheric wind structure, mechanical properties of materials, creep of materials, fatigue of missile structures, and dynamics of thin shell structures.

2. Anon., "Coming of Age - Glass Fiber Pressure Vessels," C & EN, February 20, 1956, p. 872.

This news report discusses the fabrication, materials, cost factors, and safety performance of glass fiber pressure vessels.

3. Au, Norman N., "Discontinuity Stresses in Pressure Vessels," Aerospace Corporation, Report No. TDR-594(1108)TN-1, 5 July 1961. (AD-261 137)

Elastic stress distributions at the junction of pressure vessel which consists of a short circular cylindrical shell section with ellipsoidal head closures are developed on the basis of Zove's classical shell theory. This brief study is facilitated by assuming uniform shell thickness throughout the pressure vessel.

4. Bert, Charles W., "Large Weight Reductions Possible in Pressure Vessels," Space/Aeronautics, October 1962, p. 77.

This article reviews the factors that determine optimum shell and bulkhead configurations, first for the theoretically ideal case of dissimilar shell and reinforcement materials, and then for the more usual case of shell and reinforcement made of the same material; an intersection spherical pressure vessel for aerospace vehicles is proposed.

5. Bosworth, T. J., and Hemminger, D. S., "Production Welding of Thin-Walled Pressure Vessels," Welding J., 40, No. 2, 125 (1961).

The Bomarc missile program has presented a unique operation with four different alloys being simultaneously gas tungsten-arc welded in a single production shop. Description is given of weld requirements, joint preparation, preparation of parts for welding, and welding tooling.

6. Brown, Wayne S., and Kistler, S. S., "Design of Pressure Vessels for Extreme Pressure," University of Utah, Tech. Report No. L1, June 1, 1956, (AD-97 481).

This report describes the development of the design for composite pressure vessels in which the outer shell is constructed of strong metals and the inner cavity is separated from the outer shell by heat and electrical insulating materials which though showing little strength in conventional tests can support high compressive loads when properly confined.

7. Brun, R. J., Livingood, J. N. B., Rosenberg, E. G., and Drier, D. W., "Analysis of Liquid-Hydrogen Storage Problems for Unmanned Nuclear-Powered Mars Vehicles," NASA TN D-587, January 1962.

Tank geometry, tank and supporting-structure weight, meteoroid protection, size and weight of the nuclear shield, and heat inputs to the hydrogen from nuclear, on-board thermal, solar, and planetary sources are discussed for unmanned nuclear rockets probing in the vicinity of Mars and landing freight on Mars.

8. Carlson, W. B., "Pressure Vessel Design Requirements in the Future," The Engineer, 211, 624 (1961).

This paper proposes a program to revise the conventional pressure vessel scantling design codes; both thick- and thin-walled cylinders are discussed, as well as nozzles in thin spheres.

9. Clark, C. C., "Maraging Steels and Their Suitability for Pressure Vessel Fabrication," ARS Preprint 2329-62, January 24-26, Baylor University, Waco, Texas.

Much work is required before a newly developed alloy makes the transition to a recognized engineering material; that is, one which is predictable, reliable, and available. It is the purpose of this paper to review the current status of the Maraging Steels from the alloy developers' viewpoint, to attempt to assess their importance to the missile industry and the degree to which the production development gap has been closed.

10. Cooke, V. W., and Powell, R. C., "Materials for Space Pressure Vessels," J. Metals, 13, No. 3, 198 (1961).

This paper compares the properties of titanium alloys, steel alloys, and fiber glass in consideration of their use as materials for space pressure vessels.

11. Cramer, Kenneth R., "Orbital Storage of Cryogenic Fluids," WADC TN 58-282, October 1958. (AD-203 527).

A radiative heat transfer analysis of large spherical liquid hydrogen storage vessels located in an equatorial orbit is presented. The results demonstrate that simple multi-layer reflective type shielding is sufficient to maintain moderate yearly liquid hydrogen losses. It is concluded, therefore, that research specifically in the heat transfer area is not required for the development of suitable storage containers.

12. Crane, Clayton H., and Smith, Whitney, G., "Application of 2219 Aluminum Alloy to Missile Pressure-Vessel Fabrication," Welding J., 40, No. 1, 33s (1961).

An investigation showed that solution heat-treated and aged weldments of 2014 aluminum are inherently low in ductility and toughness, and are subject to premature failure under biaxial loads,

while the 2219 alloy produces consistency a tough, ductile weldments when heat treated, and is well suited to pressure vessel applications. This paper describes the details of the weldibility, mechanical and metallurgical investigation of these alloys.

13. Dempster, W. E., Evans, R. L., and Olivier, J. R., "Lunar Storage of Liquid Propellants," NASA TN D-1117, July 1962.

The thermal environment of liquid propellant storage tanks located on the lunar surface and subsurface was investigated. The surface temperature of storage tanks located on the lunar surface depends upon the rates at which solar energy, infrared, and albedo are absorbed and reradiated by the tank. A method for artificially altering the local lunar surface temperature and the surface temperature of a tank is introduced. From a thermal standpoint it is concluded that storage of any liquid propellant on the moon is possible with present day materials and technology.

14. Dow, Norris F., "Important Research Problems in Advanced Flight Structures Design - 1960," NASA TN D-518, June 1960.

Appendix E of this report is concerned with the strength analysis of a product and the prediction of its structural capabilities. Topics of discussion include: thin shells, pressure vessels, fatigue, design optimization, and structural design criteria.

15. Driscoll, D. G., "Cryogenic Tankage for Space Flight Applications," presented at the 1959 Cryogenics Engineering Conference, Berkeley, California.

Discussion is given and drawings are presented of three basic tank designs: (1) A double wall vessel containing insulation under vacuum in which the vacuum casing forms the outer skin of the vehicle, (2) A double wall vessel containing insulation under vacuum with a removable vacuum support, and (3) A single wall vessel with a removable vacuum-insulated shell.

16. Esgar, Jack B., "Cryogenic Propellant Tank Structures," prepared for ASME Aviation Division Symposium, College Park, Md., June 1962.

    Materials used for cryogenic propellant tanks often suffer from lack of fracture toughness due to the very low temperature application, and, for space vehicles, there is a meteoroid-penetration hazard. The present state of the art regarding these problems is outlined, and some indication is given as to promising approaches for reduction in weight of future propellant tanks.

17. Frainier, R. J., "Experimental Performance and Selection of Cryogenic Rocket Insulation Systems," presented at the 1960 Cryogenic Engineering Conference.

    Evaluation of the insulations, to date, including both calculated and experimental results is most encouraging. No-loss ground-storage aboard the missile can be achieved. Staging times exceeding one year with modest losses are also possible with current know-how.

18. Gerard, George, "Structural Significance of Ductility in Aerospace Pressure Vessels," ARS J., 32, 1216 (1962).

    The results reported in this paper include an exploratory experimental study of small gage length fracture strains at stress concentrations and an analysis of the weakening and strengthening effects of stress concentrations in terms of a ductility ratio. The structural strength/weight characteristics of various high strength sheet materials are discussed in terms of the structural design problems associated with aerospace pressure vessels.

19. Goodman, J. W., "Final Report on Pressure Vessel Design Criteria," AFBMD TR 61-9, 31 December 1960. (AD-264 608).

    A program was conducted to provide experimental data to assist in establishing material selection, design, and fabrication criteria for reliable highly efficient pressure vessels. Tensile

instability in a pressure vessel was studied analytically and burst stresses of vessels which failed in this manner were accurately predicted; a miniature pressure vessel was used in this investigation to perform tests in bonafide biaxial stress fields.

20. Greenlee, H. R., "Chrysler-Type Oxygen Pressure Vessel: Calculation, Design, and Testing," WADD TR 60-365, May 1960.

The development of a lighter, stronger, more durable dual-pressure cylinder for two gases or a liquid and gas was accomplished through a new concept comprising a continuously wound high-pressure tube fitted and brazed to the inside of a cylindrical shell. The Chrysler-type pressure vessel termed "Balcon" (balanced container) makes use of a complementary stress pattern created from the composite design of the structure.

21. Haynes, C. W., and Valdez, P. J., "Rocket Motor Case Material Evaluation by Pressure Vessel Testing," Aerospace Eng., 19, No. 12, 30 (1960).

In the development of large solid-propellant rocket motor cases, small-size pressure bottles were used to evaluate materials, processes, and manufacturing variables. The results are discussed in terms of the intentional variables and such possible unintentional variables as minute cracks. Comparison of the test results with results of tests on flat tensile coupons processed with the pressure vessels shows that correlation is obtained up to 265,000 psi ultimate tensile strength; above this level, scatter in burst strength is apparent.

22. Hilton, Harry H., and Feigen, M., "Minimum Weight Analysis Based on Structural Reliability," J. Aerospace Sci., 27, 641 (1960).

An analytical investigation is presented for the proportioning of probabilities of failure among structural components in terms

of a preassigned probability of failure of the entire structure, such that the total structural weight is a minimum. The relationship of the margin of safety to probability of failure is discussed. Results of numerical computations determining the aforementioned empirical relations, the margin of safety, and the weight saved are presented.

23. Hoff, Nicholas J., "General Formulas for Influence Coefficients of Thin Spherical Shells," J. Aerospace Sci., 29, 174 (225 (1962).

General formulas are derived for the influence coefficients of the cap and of the remainder of a thin spherical shell whose edge is subjected to axisymmetric loads while the surface of the shell is not loaded. The accuracy of the resulting expressions is discussed and recommendations are made regarding their use in problems of engineering.

24. Hoffman, G. A., "Minimum-Weight Proportions of Pressure-Vessel Heads," RAND, Report RM-2675, June 13, 1961.

This study derives the optimum proportions of head closures for cylindrical pressure vessels when the predominant criterion is the minimization of weight. The derivation is based on shell geometry only and is intended for design purposes; subsequent to the definition of these minimum-weight design proportions, shell theory is required for more accurate analysis of stresses, deformations, and safety margins.

25. Holt, Marshall, "Aluminum and Aluminum Alloys for Pressure Vessels," Welding J., 35, No. 6, 308s (1956).

This paper reviews the properties of the aluminum alloys that are especially desirable for pressure vessels.

26. Johns, Robert H., Morgan, William C., and Spera, David A., "Theoretical and Experimental Analysis of Several Typical Junctions in Space Vehicle Shell Structures," ARS Preprint 2427-62, July 17-19, 1962, Cleveland, Ohio.

Theoretical equations are given along with experimental results for the discontinuity stresses arising at a change of wall thickness in a cylinder, a cylinder-hemisphere junction, and a cone-spherical torus junction in pressure vessels. In addition, a cylinder with a special closure which has considerably reduced bending stresses is described and curves with theoretical and experimental stresses are presented.

27. Kalaba, Robert, "Design of Minimal-Weight Structures for Given Reliability and Cost," J. Aerospace Sci., 29, 355 (1962).

A technique for designing minimal-weight mechanical structures having a given degree of reliability is outlined in a recent paper of Hilton and Feigen (see Ref. 22). The purpose of this note is to provide an improved computational procedure and to show how to generalize the considerations of H. and F. so as to include the costs of materials.

28. Kaplan, F., "Three Nomographs Aid in Designing Pressure Vessels," Product Eng., 31, No. 47, 78 (1960).

Charts are given to find wall thickness, hoop stress, or pressure limit; accompanying the charts are three equations, the Barlow thin-wall equation, a conservative thin-wall equation, and a thick-wall equation.

29. McMahon, Howard O., "Low-Temperature Vessels," U. S. Patent No. 2,986,891, June 6, 1961.

This invention relates to maintaining an enclosed space at a low temperature and more particularly to minimizing possible heat transfer from the surrounding atmosphere into the enclosed space.

30. Maccary, Raymond, R., "Pressure Vessel Design for High or Cryogenic Temperatures," Chem. Eng., 67, No. 11, 131 (1960).

Vessel design in accord with the ASME Code requires consideration of the effect of temperature on the maximum stress, but the Code

offers no help in determining this effect. This article presents a group of charts with which to find both pressure and thermal stresses.

31. Miller, K. Dexter, Jr., and Breslau, Steven M., "Fiberglas-Reinforced Plastic as a Rocket Structural Material," ARS J., 26, (1956).

The application of Fiberglas-reinforced plastics to highly stressed parts such as rocket cases is described.

32. Mitchell, S.E., "The Safety Factor in the Design of Seamless Steel Gas Cylinders," Metallurgia, 50, No. 8, 87 (1954).

Several methods are in use for the application of the safety factor in the design of seamless steel cylinders for holding compressed gases. The author discusses the merits of each before putting forward a proposal for a common basis for deriving the working stress.

33. Murray, F.F., and Wright, Frank W., "The Buckling of Thin Spherical Shells," J. Aerospace Sci., 28, 223 (1961).

Precise numerical solutions of the von Karman-Tsien equation of equilibrium for spherical shells under uniform external pressure have been obtained by use of the step-by-step method of integration. These solutions indicate clearly the configurations of the shell before and after buckling, and yield distinct values of the upper and lower buckling pressures.

34. Olivier, J.R., and Dempster, W.E., "Orbital Storage of Liquid Hydrogen," NASA TN D-559, August 1961.

This report presents the influence of various design parameters on the storage time of liquid hydrogen in space. Emphasis is placed on non-vented storage of subcooled liquid hydrogen in a low geocentric orbit.

35. Outwater, John O., and Seibert, Willard J., "On the Time Dependence of Failure of Filament Wound Pressure Vessels," University of Vermont, Tech. Memo No. 193 (NRL Project 62 R05 19A), September 9, 1962.

It is found that there is a distinct relationship between the failure pressure in a glass filament wound pressure vessel and the time required for it to fail. This form of static fatigue is shown graphically and an empirical formula is suggested relating material, time, and bursting load.

36. Patterson, W. W., "Fiberglass Pressure Vessels Exceed Burst-Pressure Specs," Space/Aeronautics, 37, 165 (1962).

This article discusses the testing of four epoxy-fiberglass spheres for cyclic endurance and burst strength; results of the test are given.

37. Pellini, W. S., and Strawley, J. E., "Procedures for the Evaluation of Fracture Toughness of Pressure-Vessel Materials," NRL Report 5609, June 8, 1961; J. Metals, 13, No. 3, 195 (1961).

This presentation describes the general status of the materials selection and design criteria for pressure vessels of the subject classes, as related to questions of fracture toughness. Some topics covered are: service conditions, evaluation of new materials, and thin-walled vehicles.

38. Raun, Milton, "Plastics Pressure Vessels," Materials and Methods, 42, No. 4, 107 (1955).

This article presents experimental data on the performance of early prototype plastic pressure vessels.

39. Raun, Milton, A., "Development of Reinforced Plastics Pressure Vessels," Modern Plastics, 32, No. 12, 146 (1955).

A more extensive treatment of the data presented in Ref. 38. Design and test criteria are presented, together with experimental data regarding bursting strength, volumetric expansion and permanent set under pressure, material fatigue, and other properties.

40. Riley, W. F., "Photoelastic Stress Analysis of a Pressure Vessel," AFR Report 8204-15, August 31, 1961. (AD-263 240).

The objective of the program reported in this work was the determination of the stress distribution in a complex multi-component pressure vessel and in several redesigned versions of the same vessel. A complete description of the experimental methods and procedures is given.

41. Rousseau, Jean, "Cryogenic Storage Vessels," Space/Aeronautics, March 1962, p. 61.

Of the two basic types of cryogenic storage systems, this article discusses primarily double-walled containers, which pose the more complex design problems. It outlines a generalized step-by-step procedure for the design of such containers and reviews in detail the major design factors of inner and outer shells, supports, insulation, and fill and vent lines.

42. Rowland, Richard M., and Cronin, James L., "Dynamic Effects in Fatigue Testing," J. Aerospace Sci., 27, 390 (1960).

This brief paper examines the methods used for fatigue analysis and fatigue-life predictions; appropriate control in testing is stressed.

43. Saelman, B., "A Note on the Minimum-Weight Design of Spherical and Cylindrical Pressure Surfaces," J. Aerospace Sci., 28, 72 (1961).

Equations are developed which illustrate that a unique value of the radius (of spherical or cylindrical pressure surfaces) for minimum weight will exist.

44. Sankaranarayanan, R., "A Note on the Impact Pressure Loading of a Rigid Plastic Spherical Shell," J. Aerospace Sci., 28, 77 (1961).

The behavior of a complete spherical shell under stepwise-impulsive loading by uniform external pressure is discussed. The material of the shell is assumed to be rigid perfectly-plastic and to obey Tresca's yield condition and the associated-flow rule. The load is assumed to be greater than the static collapse load and to act for a short period of time.

45. Smolak, George R., Knoll, Richard H., and Wallner, Lewis E., "Analysis of Thermal-Protection Systems for Space-Vehicle Cryogenic-Propellant Tanks," NASA TR R-130, 1962.

Analytical techniques are presented that permit the calculation of heat-transfer rates with various thermal-protection systems for liquid-cryogenic-propellant tanks subjected to on-board, solar, and planetary heat fluxes. The effectiveness of these protection systems in reducing propellant heating is shown both for ideal heat-transfer models and for a simplified hydrogen-oxygen terminal stage used for typical Mars missions.

46. Steele, L. E., and Hawthorne, J. R., "Effect of Irradiation Temperature on Neutron-Induced Changes in Notch Ductility of Pressure-Vessel Steels," NRL Report No. 5629, June 28, 1961. (AD-259 361).

An irradiation assembly was designed for the irradiation of Charpy-V-notch specimens at four different temperatures simultaneously in a fuel core facility of the Oak Ridge Low Intensity Test Reactor. Conclusions of the tests were that no appreciable annealing of radiation effects occur during irradiation at temperatures under 450°F.

47. Svensson, N. L., "The Bursting Pressure of Cylindrical and Spherical Vessels," J. Appl. Mech., 25, No. 3, 89 (1958).

Expressions have been derived for the calculation of bursting pressures for thin and thick-walled cylindrical and spherical pressure vessels by making use of an idealized stress-strain curve. By relating this ideal case to the results of a simple tension test on the material, the bursting pressure may be calculated from a simple design formula.

48. Titanium Metals Corporation of America, "How 4000 Titanium Pressure Vessels Now in Service Chart Safe, Reliable Path to Weight Reduction," Titanium Data.

The properties of titanium and of titanium pressure vessels are described in this brochure as well as the fabrication of titanium pressure vessels. Charts and figures are presented for design considerations, such as bottle pressure versus volume, reliability, and safety.

49. Varland, Walter B., "Study of Guided Missiles Structural Design Criteria," WADC TR 57-140, Vol. I., February 1959. (AD-155 888).

The objective of this report is to establish rational design criteria for the structural design of current and future Air Force guided missiles. Pressure vessels are discussed in Part III. The problems associated with obtaining satisfactory and reliable pressure vessels of minimum weight are presented. Also, views toward achieving this by means of material selection, design details, and acceptance testing are presented.

50. Vaughan, W. L., "Finding the Strength of Satellite and Missile Shells," Space/Aeronautics, February 1963, p. 112.

This brief article consists of two figures to be used in finding the strength of shells and a discussion on the use of the figures. Figure 1 provides an easy way to find how thick an evenly spaced, frame-stiffened circular or conical shell must be to support a given load; Figure 2 is to find how much uniform external pressure a spherical shell can take before buckling.

51. Weil, N. A., "Bursting Pressures and Safety Factors for Thin-Walled Vessels," Franklin Inst. J., 265, 97 (1958).

This paper deals with the bursting of vessels under slowly increasing pressures. The equations governing instability (bursting) are formulated for tensile bars and for vessels under internal pressures, assuming that the octahedral shear stress uniquely describe the straining history of the material, and that the Hencky-Mises theory governs plastic behavior.

52. Wiltshire, Arthur J., "Now you Can Specify Plastics Pressure Vessels," Materials in Design Eng., November 1958.

The discussion here is limited to spherical pressure vessels. The design of plastics pressure vessels is considered and comparisons with metal pressure vessels are illustrated.

53. Wolff, Frank, and Siuta, Theodore, "Factors Affecting the Performance and Aging of Filament Wound Fiberglas Structures," ARS J., 32, 948 (1962).

A new humidity test, termed a soak-cycle test, is discussed and shown to be a better indicator of relative life potential and relative remaining life of filament wound pressure vessels than conventional test methods.

54. Zickel, John, "Isotensoid Pressure Vessels," ARS J., 32, 950 (1962).

The term "isotensoid pressure vessel" is applied to a pressure vessel consisting entirely of filaments that are loaded to identical stress levels; resin is used as a binder, but no strength is attributed to it. This paper discusses the computer solution for the headshape of an isotensoid pressure vessel as given by an elliptic integral.

PRESSURIZED GAS SYSTEMS

1. Chironis, N., "Gas Bearings Guide Satellites into Space," Product Eng., November 9, 1959, p. 41.

A brief discussion on the use of pressurized air bearings which were used in the guidance system of Explorer I.

2. Datis, Angelo, and Usher, L. H., "Final Gas Temperature in Missile Propellant Tanks," Space/Aeronautics, August 1962, p. 159.

To find how much pressurizing gas you need to expel cryogenic propellants from missile tanks, you normally have to calculate gas-to wall heat transfer step by step to get the final gas temperature. To simplify this operation, the authors calculated final gas temperatures for several evaporated propellant pressurization systems with a digital computer and constructed nomographs from the results. Agreement was within 7% of test data.

3. Dickey, F. L., and Knipp, G. H., "Sealed Cabin Reliability as Related to Structure and Internal Atmosphere," ARS J., 29, 656 (1959).

This paper considers the advantages to the crew of an optimum internal atmosphere and pressure and the effects on a sealed cabin structure. The reliability of the cabin and its resistance to fast fracture are discussed and shown to be essentially constant for various internal pressures with proper design.

4. Doshay, I., "Reliability Implementation in Engineering Design," SAE Preprint 235A, Los Angeles, California, October 10-14, 1960.

This paper illustrates the techniques of data development through statistical reduction methods. It follows with analysis of failure trends and the formulation of derating stress factors. Also considered is the application of reliability relationships through engineering and techniques and assurance of reliable design through design review.

5. Ehrenfeld, John, and Strong, Peter, "An Analysis of Thermal Protection Systems for Propellant Storage During Space Missions," A.D. Little, Inc., Report No. 63270-04-0, December 1961 (AD-270 973).

The effects of various models for insulation behavior are investigated. Approximate methods for calculating boil-off and their limitations are developed, as well as optimum design parameters based on these tehcniques. A number of general practices leading to good design are discussed.

6. Finkelman, E.M., "Analysis of the Combined Influences of the Micrometeoroid and Radiation Environments on Spacecraft Design," IAS Paper No. 62-128, Los Angeles, California, June 19-22, 1962.

This paper considers the fact that the minimum weight radiation protection will come from a shield design which closely encloses the crew of a spacecraft. Micrometeoroid protection, which must be applied around the outside of the cabin pressure shell, also provides radiation shielding. The distribution of shielding weight between these two locations determines the degree of protection from each of the two hazards.

7. Jordan, Peter F., "Stresses and Deformations of the Thin-Walled Pressurized Torus," J. Aerospace Sci., 29, 213 (1962).

The thin-walled pressurized torus is an example of a configuration that cannot be treated properly by means of linear membrane theory. In the present paper, the concept of an ideal membrane is revalidated by showing that an adequate non-linear membrane solution exists.

8. Kearfott Division, General Precision, Inc., "A Two-Axis Gas Bearing Gyroscope," Quart. Report No. M-1999-4-6, 31 January 1961. (AD-252 685).

This report is concerned with the study, testing, and analysis of torques which tend to restrain the gyro wheel from acting as a free-spinning rotor.

9. Kolcum, Edward H., "Honeywell Pushes Vehicle Controls Effort," Aviation Week, November 5, 1962, p. 56.

This article discusses the research in attitude control which the Minneapolis-Honeywell Regulator Co. is conducting; also illustrated is the aluminum expulsion diaphragm which the company is developing for JPL.

10. Kovit, Bernard, "Ceramic Gas-Bearing Gyro," Space/Aeronautics, July 1960, p. 131.

This article describes the construction and the specifications of a ceramic helium-bearing gyro developed by Minneapolis-Honeywell.

11. Krivetsky, Alexander, et al., "Final Report: Research on Zero-Gravity Expulsion Techniques," Bell Aerosystems Co., Report No. 7129-933003, March 1962.

This report presents design concepts of zero-gravity expulsion devices on an extremely broad basis and forms a compendium of such device configurations as an aid to system designers in the selection of expulsion systems to particular applications. As a supplement to the concept presentations, the report also presents some of the more important data necessary for design with emphasis on information not readily available in current literature.

12. Krivetsky, Alexander, et al., "Addendum to Report No. 7129-933003: "Research on Zero-Gravity Positive Expulsion Techniques," September 1962.

In the pages of this Addendum can be found a summary of designs and design concepts of zero-gravity positive expulsion devices. These data, as abstracted from the Final Report on Contract

NASr-44, will readily assist the system designer in the selection of an expulsion device to fulfill a particular known application. All data are based upon an extensive state-of-the-art survey completed by Bell Aerosystems Company for the NASA in March 1962.

13. LaFond, Charles D., "Gas Gyro Tested for Use in Five Weapons," Missiles & Rockets, May 28, 1962, p. 26.

A general discussion of a solid-propellant hot-gas driven gyro; for gyro evaluation and testing, the combustion chamber and uncaging mechanism are designed to permit operation from a cold-gas supply.

14. Laub, J. H., and McGinness, H. D., "A Closed-Cycle System for Gas Bearings," Jet Propulsion Laboratory, Technical Release No. 34-174, January 19, 1961.

The support of sending masses of inertial instruments by gas lubrication and flotation has considerable inherent advantages; however, for space missions of long duration, the storage of expendable gas becomes impractical because of the size and weight of the container. This paper discusses the development of a closed-cycle for gas bearings, and the use of a Freon vapor for this system.

15. Licht, Lazar, and Elrod, Harold, "A Study of the Stability of Externally Pressurized Gas Bearings," Trans. of the ASME, Vol. 27, Series E, June 1960, p. 250.

An analysis was made which treats the flow within the gas film in a thrust bearing on a continuous, rather than "lumped" basis. It shows that within the limitation imposed upon the design of the bearing by other considerations, the following parameters or combinations of parameters should be minimized or maximized in order to insure stability: Minimized; depth of pockets, difference between supply and recess pressures, effective mass

of bearing. Maximized; Supply nozzle diameter, length of annulus, area ratio of annular and pocket regions.

16. Little, A. D., Inc., "Liquid Propellant Losses During Space Flight," First Quart., Prog. Rept., January 1961. (AD-250 700).

This report discusses the space environment and the interaction of liquid propellants with the thermal environment, the meteoroid environment, and the ionizing radiation environment.

17. Little, A. D., Inc., "Liquid Propellant Losses During Space Flight," Second Quart. Prog. Rept., May 1961, Report No. 63270-00-02. (AD-260 545).

Under thermal interaction studies this report covers theoretical aspects of the behavior of multiple-foil radiation shielding, analytical studies of thermal protection systems, and an experimental study of multilayer radiation shielding insulation. The meteoroid studies are concerned with the evaluation of meteor bumpers and the impact of pellets with thin plates. The ionizing radiation section includes discussions of the calculation of dose rates, the effect of proton sputtering on reflecting surfaces, the embrittlement of structural materials, the effect of hydrogen diffusion on vacuum insulation, and radiation-induced desorption of adsorbed gases.

18. Little, A. D., Inc., "Liquid Propellant Losses During Space Flight," Third and Fourth Quart. Prog. Rept., November 1961. Report No. 63270-00-03. (AD-270 974).

In addition to the topics covered in previous reports (Ref. 16 and 17), this report includes a section on the effect of zero gravity on the storage of liquid propellants; this section discusses the calculation of surface free energies, the measurement of contact angles in liquid hydrogen, and the stability of a liquid-vapor interface.

19. Lockheed-Georgia Co., "Main Propellant Tank Pressurization System Study and Test Program," Six Months Prog. Rept., Eng. Rept. ER-4728, February 1961; FTRL-TOR-61-22. (AD-252 688)

Discussion of evaporated propellant and main tank injection systems for main propellant tank pressurization is presented. Specific problems related to these systems are discussed and selected systems are analyzed. Results of small-scale tank testing with liquid hydrogen, liquid nitrogen, UDMH, and NTO are presented.

20. Lockheed-Georgia Co., "Main Propellant Tank Pressurization System Study and Test Program," Second Six-Month Prog. Rept., Eng. Rept. ER-5238, August 1961; FTRL-TOR-61-23. (AD-261 531).

Discussion of evaporated propellant and main tank injection systems for main propellant tank pressurization is presented. Specific problems related to these systems are discussed and selected systems are analyzed. Results of testing with liquid hydrogen, liquid nitrogen, UDMH, NTO, N_2H_4, 50-50 UDMH/N_2H_4, BrF_5, ClF_3, and B_5H_9 are presented.

21. Lockheed-Georgia Co., "Main Propellant Tank Pressurization System Study and Test Program," Volume III, Design Handbook," ER-5296; SSD-TR-61-21, Vol. III. (AD-269 584).

Design information on liquid propellant tank pressurization systems is presented in handbook form. The areas covered are: pressurization gas requirements, including hand calculation procedures and nomographs; tankage, including material properties and volume and wall area curves; and components, including stored helium system weight curves and a simple but accurate heat exchanger design method.

22. Lockheed-Georgia Co., "Main Propellant Tank Pressurization System Study and Test Program, Volume IV, Computer Program," ER-5296, December 1961; SSD-TR-61-21, Vol. IV. (AD-269 553)

A computer program which can be used to determine the pressurizing gas requirements for a missile propellant tank pressurization system is described. The program is applicable to both cryogenic and storable propellants when pressurized with stored gas, evaporated propellant, and main tank injection methods of pressurization.

23. Lucien, Harold W., "Preliminary Study of the Effects of Ionizing Radiations on Propellants; the X-irradiation of Ammonia and Hydrazine," NASA TN D-1193, February 1962.

Ammonia and hydrazine were X-irradiated in a preliminary investigation of the effects of ionizing radiations on propellants. Less than 1 percent decomposition of ammonia was observed. The irradiation of hydrazine vapor resulted in approximately 3 percent decomposition. Both ammonia and hydrazine decompositions involved the formation of nitrogen and possibly hydrogen.

24. Lynch, W. M., Clark, C. B., Epstein, B., "Advanced Vehicle Guidance Systems Reliability Investigation," Stanford Research Institute, ASD-TDR-62-359, April 1962.

The work reported represents a start toward finding a means to predict the reliability of military interplanetary space guidance systems. Two mathematical models for representing the reliability of a particular gas bearing gyroscope are developed from laboratory test data supplied by the manufacturer. Sources of failure data and considerations of life testing are discussed.

25. Morrison, S. C., "Maximizing Reliability for One-Shot Space Missions," Aerospace Eng., March 1962, p. 54.

The reliability problem of the one-shot space mission may be defined in terms of some current programs. Reliability characteristics of Explorer VI, Pioneer V, and a Surveyor study model have been analyzed, and these vehicles are discussed.

26. Parker, Bernard, "Gas Bearings Cut Gyro Instability," Space/Aeronautics, September 1962, p. 187.

Run-down curves for gas bearings show results that can't be approached with ball-bearings according to tests conducted at Kearfott Division.

27. Pittman, William C., "Dynamics of an Air-Supported Spherical Gyroscope," ARS J., 32, 1100 (1962).

In this note, the motion of the ball is examined by assuming that it is initially suspended on the air film and the casing then started in motion. The differential equations of the gyroscope are formulated in terms of the three Euler Angles and the moments of inertia, and the torus are then defined in terms of these three angles in order to obtain a solution to the problem.

28. Raleigh, C.W., "Gamma Irradiation of Dimazine," FMC Corporation, Report No. 4-484-R, October 1960.

Dimazine (UDMH) was subjected to gamma radiation at dosages ranging from 1.4×10^5 to 1.2×10^8 reps. At the 1.4×10^5 rep dosage level, less than one per cent of the UDMH was decomposed; at a 1.2×10^8 rep level, the UDMH concentration decreased by 7.9 per cent.

29. Redus, Jerome R., "Sputtering of a Vehicle's Surface in a Space Environment," NASA TN D-1113, June 1962.

A brief survey of current investigations of physical sputtering is given, from which estimates are made of the sputtering yields by constituents found in a vehicle's environment. The rates at

which a vehicle's surface is sputtered by the earth's atmosphere, by radiation belts, and by solar corpuscular radiation are calculated. It is shown that the atmospheric sputtering constitutes a serious problem at low orbital altitudes and that the damage at 1 A. U. by solar corpuscular radiation is within an order of magnitude of that caused by micrometeorites.

30. Sirocky, Paul J., "Transfer of Cryogenic Fluids by an Expulsion-Bag Technique," NASA TN D-849, April 1961.

Mylar-coated Dacron bags used as fluid containers were found to be flexible enough to collapse at temperatures of approximately 36°R and thereby cause expulsion of cryogenic fluids. Visual inspection and helium gas pressurization of the bags showed no damage even after repeated cycles.

31. Smith, W. W., "Hydrazine Unit Corrects Spacecraft Trajectories," Space/Aeronautics, July 1962, p. 123.

This article briefly describes the nitrogen pressurization system used for the multiple-start hydrazine propulsion system designed for midcourse-and approach-correction of a Mariner spacecraft; block diagrams of the system and system characteristics are given.

32. Tang, I. C., and Gross, W. A., "Analysis and Design of Externally Pressurized Gas Bearings," IBM, San Jose, California, Report RJ-191, April 17, 1961.

Equations for flow rate, pressure, load, and stiffness of externally pressurized thrust and journal bearings are given for purely viscous isothermal gas films with longitudinal and radial flow and no relative surface motion. Charts are presented by means of which the bearing characteristics can be evaluated in terms of the bearing configuration, the ratio supply to ambient pressure, and a bearing parameter.

33. Waggoner, James N., and Burriss, William L., "Environmental Control of Manned Spacecraft for Durations up to Two Weeks," ARS J., 32, 1019 (1962).

Data concerning high pressure gas storage vessel weights and volumes are presented here to illustrate the performance that can be expected of this type of fluid storage and to facilitate comparison with cryogenic storage techniques. The section on cryogenic storage of atmospheric fluids discusses 2-phase storage with thermal pressurization, supercritical storage with thermal pressurization, compressed liquid storage with positive expulsion, and cryogenic vessel weights.

34. Spieth, C. W., et al., "Study of Integrated Cryogenic Fueled Power Generating and Environmental Control Systems. Volume II - Cryogenic Tankage Investigation," ASD TR 61-327, Vol. II, November 1961. (AD-270 474).

This document reports technical data pertaining to storing and expelling cryogenic fluids for auxiliary power systems suitable for use in manned space vehicles. It has been the purpose of this program to study, optimize, test, and recommend appropriate tankage techniques for various type missions; breadboard specifications are given for the tank system.

35. Weber, Richard J., "Influence of Meteoroid Hazards on Selection of Spacecraft Propellants," ARS J., 32, 1105 (1962).

This note considers, in a very elementary fashion, the weight of a hypothetical space stage whose tank thickness is determined on the basis of protection against meteoroid damage.

36. Wiederhorn, Norman, "The Space Environment and its Interactions with Liquid Propellants and Their Storage Systems," A. D. Little, Inc., Report No. 63270-02-1, September 1961. (AD-266 034).

A discussion is presented of the pertinent factors of the space environment that influence the storage of liquid propellants in space and the mechanisms whereby these may interact with a liquid propellant or its storage system. An extensive bibliography, including abstracts, is contained in this report.

37. Yeh, T. F., "Viscous Torque in a Spherical Gas Bearing," J. Aerospace Sci., 29, 160 (1962).

The purpose of this paper is to show how to calculate viscous torque in a spherical gas bearing when the bearing eccentricity *e* is taken into account.

RINGS AND SEALS

1. Anon., "Hermetic Seals," Electromechanical Design, 4, No. 10, 52 (1960).

A discussion is presented of molded-in-place elastomeric seals; qualification test procedures and results are given. A helium-detector mass spectrometer was used for determination of leakage rates.

2. Ashmead, R. R., "Static Seals for Missile Applications," Jet Propulsion, 25, 331 (1955).

The general problems of static seals for missile applications are reviewed and the importance of temperature emphasized. Testing experience with various types of static seals over a temperature range from -300 to +1400 °F is described. It is concluded that a good high-temperature static seal will seal equally as well at extremely low temperatures, and that a good static seal cannot be achieved unless the mating flanges are designed with full realization of the limitations of the seal.

3. Berg, Robert J., "A Review of Seal Materials for Guided-Missile Applications," Jet Propulsion Laboratory, Progress Report No. 20-340, March 7, 1958.

The seal materials which have proved useful at JPL in guided-missile applications are described, and a series of proposed tests for evaluating new seal materials is included. A summary of results with various seal materials is given; the materials are evaluated according to their chemical characteristics.

4. Dawton, R. H. V. M., "High Vacuum Shaft Seals, Flanged Joints and the Gassing and the Permeability of Rubber-like Materials," Brit. J. Appl. Phys., 8, 414 (1957).

Various designs of high vacuum shaft seals are given and their performance measured by the pressure rate of rise in a closed

system. Data are given on the testing of flanged gasket joints and their effect on a vacuum system during the first twenty hours of pumping when the joint gassing is liable to be confused with a leak; data are also given on the flange clamping pressure necessary for a tight joint.

5. Gibbs, W. E., Griffin, W. R., and Spain, R. G., "Elastomers," Materials Symposium, 13-15 September 1961, Phoenix, Arizona, ASD TR 61-322. (AD-264 193)

   This paper presents the principal phases of Air Force elastomer research and the applications of elastomer research in aerospace vehicles; three broad areas discussed are: Synthesis; Characterization; and Engineering.

6. Jaffe, L. D., and Rittenhouse, J. B., "Behavior of Materials in Space Environments," Jet Propulsion Laboratory, Technical Report No. 32-150, November 1, 1961.

   The quantitative effects of the environments encountered in various regimes of space upon several kinds of engineering materials are discussed. The effects on both inorganic and organic materials of vacuum, impinging atoms, ions and electrons, electromagnetic radiation, and meteoroids are discussed and tabulated. A list of 330 references is cited.

7. Kramer, I. R., and Podlaseck, S. E., "Effect of Vacuum Environment on the Mechanical Behavior of Materials," Martin Company Report RM-102, AFOSR 2139, October 1961. (AD-273 250).

   This report presents the results of in vacuo testing of aluminum crystals for the effect on fatigue life, stress and strain, and creep rate. Complete description of the vacuum equipment, testing apparatus, and specimen configuration is given.

8. Lad, Robert A., "Survey of Materials Problems Resulting from Low-Pressure and Radiation Environment in Space," NASA TN D-477, November 1960.

The first part of this paper discusses the possible detrimental effects of low pressure in space, such as changes in composition of materials, changes in frictional properties, optical transmission, and emissivity or simply loss of materials. Materials discussed include pure metals, alloys, ceramics and other inorganic compounds, plastics, and lubricants. Damage caused by penetrating radiation and electromagnetic radiation is briefly discussed. Suggested areas for research are outlined.

9. Lehr, S. N., Tronolone, V. J., and Horton, P. V., "Equipment Design Considerations for Space Environment," Space Technology Laboratories, Inc., Report No. STL/TR-60-0000-09224, September 1960. (AD-269 301)

Information is presented in this report on some types of materials used successfully for space vehicles such as Pioneer V, Explorers IV and VI, and others. Tabulated data are presented for the effect of high vacuum on plastic materials and for the effect of radiation on metals, plastics, and elastomers.

10. Mauri, E., "Seals and Gaskets," Space Materials Handbook, Lockheed Missiles and Space Company, January 1962. (AD-284 547)

This section discusses the application of seals and gaskets in spacecraft, the compatibility of seal materials with reactive fluids, and the effects of high vacuum, nuclear radiation, and solar radiation on the mechanical properties of seal materials. Tabulated data for metals, plastics, and elastomers are presented here, as well as in other sections of the Handbook.

Rings and Seals

11. Neff. G., Young, R. W., and Carrell, T., "Predicting O-Ring Leak Rates," Research/Development, October 1962, p. 55.

    A large number of seal materials were screened for suitability for aerospace applications; besides the usual weight loss (or gain) Measurements, the diffusion and permeability of the materials to helium, nitrogen, air, and water vapor were measured. The results of these tests (average leakage) are presented in tabular form.

12. Ossefort, Z. T., and Ruby, J. D., "The Effects of a Simulated Space Environment on the Properties of Elastomers," Rock Island Arsenal Laboratory, Report No. 61-1999, 15 May 1961. (AD-259 557)

    The effect of high vacuum and temperature on the mechanical properties of elastomeric materials. The elastomers were exposed to a vacuum of the order of 1×10^{-6} mm of Hg for periods of 5 to 56 days, and at temperatures ranging from ambient to 300 °F. Data on the changes in elastic modulus, tensile strength, flexibility, etc. are presented for both plasticized and unplasticized neoprene and nitrile rubber; comparison is made with property changes after exposure in air at the same temperatures and for the same time periods.

13. Pickett, A. G., and Lemcoe, M. M., "Handbook of Design Data on Elastomeric Materials Used in Aerospace Systems," ASD TR-61-234, January 1962. (AD-273 880)

    The elastomeric materials for which data are presented are compounds of high polymers currently available in the U.S.; the properties considered are original mechanical and physical properties and the changes in these properties that result from aging and exposures to the aerospace environment.

14. "The Seals Book," Machine Design, January 19, 1961.

    This handbook on seals, packings, and gaskets is designed to provide design engineers with a single source of authoritative and useful information. To accomplish this objective, emphasis is

placed wherever possible on data in the form of tables, charts and graphs that are immediately useful for a specific purpose. Chapters 2 to 11 cover dynamic seals, Chapters 12 to 14 cover static seals, and Chapter 15 contains a glossary of terms and a compilation of standards.

15. Van Vliet, R. M., Ed., "Coatings for the Aerospace Environment," WADD TR 60-773, July 1961.

Although this volume is devoted to the suitability of coating materials for the aerospace environment, parts of it are equally valuable in the selection of materials for seals and gaskets.

16. Walker, W. R., "Design Handbook for O-Rings and Similar Elastic Seals," WADC TR 59-428, Part II, April 1961. (AD-265 443)

Data presented herein is concerned with hydraulic and penumatic systems utilizing static and dynamic type seals at temperatures exceeding 275 °F and for static applications at cryogenic temperatures. The effect of vibration, pressure cycling, seal materials, and fluids on the operational efficiency of seals and back-up rings are discussed.

17. Williams, R. R., "Flange Joint Deflection," Western Aviation, Missiles and Space, December 1961, p. 50.

Deflection in a flanged joint can cause leakage at its seal. Though a metallic static seal has recovery, spring-back, and memory, the deflection of the flange itself must be analyzed to ensure a leak-tight joint. Since it is time-consuming to predict analytically the magnitude of such a deflection, a graphical solution is presented which will lead to adequate rigidity and proper distribution of material to avoid seal malfunction.

INTERIM REPORT DISTRIBUTION LIST

Contract - NAS7-105

Copies	Recipient
	NASA Western Operations Office 150 Pico Boulevard Santa Monica, California
1	Office of Technical Information
1	Contracting Officer
1	Patent Office
	NASA Lewis Research Center 21000 Brookpark Road Cleveland 35, Ohio
1	Office of Technical Information
1	Contracting Officer
1	Patent Office
	NASA Marshall Space Flight Center Huntsville, Alabama
1	Office of Technical Information, M-MS-IPC
1	Contracting Officer, M-P&C-C
1	Patent Office, M-PAT
	NASA Headquarters Washington 25, D. C.
1	Contracting Officer, BRA
1	Patent Office, AGP
	NASA HEADQUARTERS Washington 25, D. C.
4	Mr. Henry Burlage, Jr. Chief, Liquid Propulsion Systems, RPL
1	Mr. A. O. Tischler Assistant Director for Propulsion, MLP
	TECHNICAL MANAGER
1	Mr. Richard N. Porter Liquid Propulsion Section Propulsion Division Jet Propulsion Laboratory 4800 Oak Grove Drive Pasadena, California

Interim Report Distribution List

Contract - NAS7-105

Copies	Recipient
25	Scientific and Technical Information Facility NASA Representative, Code CRT P.O. Box 5700 Bethesda, Maryland 20014
2	Ames Research Center Moffett Field, California
2	Goddard Space Flight Center Greenbelt, Maryland
2	Jet Propulsion Laboratory California Institute of Technology 4800 Oak Grove Drive Pasadena, California
2	Langley Research Center Langley Field, Virginia
2	Lewis Research Center 21000 Brookpark Road Cleveland 35, Ohio
2	Marshall Space Flight Center Huntsville, Alabama
2	Manned Spacecraft Center Houston, Texas
1	Advanced Research Projects Agency Pentagon, Room 3D154 Washington 25, D.C.
1	Aeronautical Systems Division Air Force Systems Command Wright-Patterson Air Force Base, Ohio
1	Air Force Missile Development Center Holloman Air Force Base, New Mexico
1	Air Force Missile Test Center Patrick Air Force Base, Florida
1	Air Force Systems Command, Dyna-Soar Air Force Unit Post Office Los Angeles 45, California
1	Army Ordnance Missile Command Redstone Arsenal, Alabama

Interim Report Distribution List

Contract - NAS7-105

Copies	Recipient
1	Aeronutronic A Division of Ford Motor Company Ford Road Newport Beach, California
1	Aerospace Corporation 2400 East El Segundo Boulevard El Segundo, California
1	Arthur D. Little, Inc. Acorn Park Cambridge 40, Massachusetts
1	Astropower, Inc., Subsidiary of Douglas Aircraft Company, Inc. 2968 Randolph Avenue Costa Mesa, California
1	Astrosystems, Inc. 82 Naylon Avenue Livingston, New Jersey
1	Atlantic Research Corporation Edsall Road and Shirley Highway Alexandria, Virginia
1	Beech Aircraft Corporation Boulder Facility Box 631 Boulder, Colorado
1	Bell Aerosystems Company P. O. Box 1 Buffalo 5, New York
1	Bendix Systems Division Bendix Corporation Ann Arbor, Michigan
1	Boeing Company P. O. Box 3707 Seattle 24, Washington
1	Convair (Astronautics) Division of General Dynamics Corporation P. O. Box 2672 San Diego 12, California

Interim Report Distribution List

Contract - NAS7-105

Copies	Recipient
1	Arnold Engineering Development Center A. E. O. R. Tullahoma, Tennessee
1	Bureau of Naval Weapons Department of the Navy Washington 25, D. C.
1	Central Intelligence Agency 2430 E. Street, N. W. Washington 25, D. C.
1	Defense Documentation Center Headquarters Cameron Station, Building 5 5010 Duke Street Alexandria, Virginia 22314 Attn: TISIA
1	Headquarters, United States Air Force Washington 25, D. C.
1	Picatinny Arsenal Dover, New Jersey
1	Rocket Research Laboratories Edward Air Force Base, California
1	U. S. Naval Ordnance Test Station China Lake, California
1	U. S. Atomic Energy Commission Technical Information Services Box 62 Oak Ridge, Tennessee
1	Chemical Propellant Information Agency Johns Hopkins University Applied Physics Laboratory 8621 Georgia Avenue Silver Spring, Maryland
1	Aerojet-General Corporation P.O. Box 296 Azusa, California
1	Aerojet-General Corporation P.O. Box 1947 Sacramento 9, California

Interim Report Distribution List

Contract - NAS7-105

Copies	Recipient
1	Curtiss-Wright Corporation Wright Aeronautical Division Wood-ridge, New Jersey
1	Douglas Aircraft Company, Inc. Missile and Space Systems Division 3000 Ocean Park Boulevard Santa Monica, California
1	Fairchild Stratos Corporation Aircraft Missiles Division Hagerstown, Maryland
1	General Electric Company Missile and Space Vehicle Department Box 8555 Philadelphia, Pennsylvania
1	General Electric Company Rocket Propulsion Units Building 300 Cincinnati 15, Ohio
1	Grumman Aircraft Engineering Corporation Bethpage, Long Island, New York
1	Kidde Aero-Space Division Walter Kidde and Company, Inc. 675 Main Street Belleville 9, New Jersey
1	Lockheed Aircraft Corporation Missile and Space Division Sunnyvale, California
1	Lockheed California Company 10445 Glen Oaks Boulevard Pacoima, California
1	Lockheed Propulsion Company P. O. Box 111 Redlands, California
1	Marquardt Corporation 16555 Saticoy Street Box 2013 - South Annex Van Nuys, California
1	Martin Division Martin Marietta Corporation Baltimore 3, Maryland

Interim Report Distribution List

Contract - NAS7-105

Copies	Recipient
1	Martin Denver Division Martin Marietta Corporation Denver, Colorado
1	McDonnell Aircraft Corporation P.O. Box 6101 Lambert Field, Missouri
1	North American Aviation, Inc. Space & Information Systems Division Downey, California
1	Northrop Corporation 1001 East Broadway Hawthorne, California
1	Philco Corporation Western Development Laboratories 3825 Fabian Way Palo Alto, California
1	Pratt & Whitney Aircraft Corporation Florida Research & Development Center West Palm Beach, Florida
1	Radio Corporation of America Astro-Electronics Division Defense Electronic Products Princeton, New Jersey
1	Reaction Motors Division Thiokol Chemical Corporation Denville, New Jersey
1	Republic Aviation Corporation Farmingdale Long Island, New York
1	Rocketdyne (Library Dept. 586-306) Division of North American Aviation, Inc. 6633 Canoga Avenue Canoga Park, California
1	Space General Corporation 9200 Flair Avenue El Monte, California
1	Space Technology Laboratories P.O. Box 95001 Airport Station Los Angeles 45, California

Interim Report Distribution List

Contract - NAS7-105

Copies	Recipient
1	Stanford Research Institute 333 Ravenswood Avenue Menlo Park, California
1	TAPCO Division Thompson-Ramo-Wooldridge, Inc. 23555 Euclid Avenue Cleveland 17, Ohio
1	Thiokol Chemical Corporation Redstone Division Huntsville, Alabama
1	United Aircraft Corporation East Hartford Plant 400 Main Street Hartford, Connecticut
1	United Technology Corporation 587 Mathilda Avenue Sunnyvale, California
1	Vought Astronautics Box 5907 Dallas 22, Texas

STANFORD
RESEARCH
INSTITUTE

MENLO PARK
CALIFORNIA

Regional Offices and Laboratories

Southern California Laboratories
820 Mission Street
South Pasadena, California

Washington Office
808–17th Street, N.W.
Washington 6, D.C.

New York Office
270 Park Avenue, Room 1770
New York 17, New York

Detroit Office
1025 East Maple Road
Birmingham, Michigan

European Office
Pelikanstrasse 37
Zurich 1, Switzerland

Japan Office
c/o Nomura Securities Co., Ltd.
1–1 Nihonbashidori, Chuo-ku
Tokyo, Japan

Representatives

Toronto, Ontario, Canada
Cyril A. Ing
Room 710, 67 Yonge St.
Toronto 1, Ontario, Canada

Milan, Italy
Lorenzo Franceschini
Via Macedonio Melloni, 49
Milano, Italy