316p.

N64 11098

CODE-1

[redacted]

NASA CR 52600

OTS PRICE

XEROX $ 19.75 mf

MICROFILM $ 9.68 mf.

JET PROPULSION LABORATORY
CALIFORNIA INSTITUTE OF TECHNOLOGY
PASADENA, CALIFORNIA

SQT-11395

Section Report No. 372-11

USER GUIDE FOR THE JPL TRAJECTORY MONITOR SYSTEM UNDER THE IBM FORTRAN II, VERSION 2 MONITOR

J. Scott,
R. White,
L. Laxdal, and
A. Rosenberg

9 Aug. 1963 316p refs

[X] OTS

[2] (NASA Contract NAS7-100)
(NASA CR-52600; JPL Sect. Rept. 372-11) OTS: $19.75 ph, $9.68 mf

JET PROPULSION LABORATORY
CALIFORNIA INSTITUTE OF TECHNOLOGY
PASADENA, ~~CALIFORNIA~~
August 9, 1963

Copyright © 1963
Jet Propulsion Laboratory
California Institute of Technology

Prepared Under Contract No. NAS 7-100
National Aeronautics & Space Administration

NOTICE

This document is a Jet Propulsion Laboratory Section Report. Section Reports are not official publications of the Jet Propulsion Laboratory; they are normally for use of Laboratory personnel only and are not to be released to outside agencies unless such distribution serves a necessary and specific purpose of the Laboratory.

The cognizant Section or Division Chief must authorize or disallow or establish the conditions which permit the external distribution of Section Reports.

Authors are cautioned NOT to reference Section Reports in official Laboratory publications.

CONTENTS

I. Introduction 1

II. Computer Configuration 2

III. JPL Trajectory Monitor System: Its Capability 5

A. Introduction 5

B. Targeting Methods 5

C. Auxiliary Output 10

IV. FORTRAN System 12

A. FORTRAN Interface with the JPL Trajectory System 12

B. Some Particulars of the FORTRAN System 13

C. FORTRAN Control Cards 14

V. Format and Definition of the Information on the Magnetic Tapes 16

VI. System Generating Procedure 19

A. JPL's Procedure for Generating the Master Set of Tapes 19

B. User's Procedure for Transferring the Data From Tapes to Punched Binary and BCD Cards and Printed Listings 20

VII. Operating Procedure 22

A. Running the Check Cases Using the Distributed Tapes 22

B. Assembling a Symbolic Subroutine 22

C. Inserting the Resulting Binary Cards Into the Binary Program Input Deck and Writing a New Trajectory Monitor System Tape 24

D. Setting Up and Running a Trajectory Job 34

E. Operating Outside of the FORTRAN System 36

VIII. Description of the Input Quantities 38

A. Monitor Input Description 38

B. Monitor Input Forms 45

C. Space Trajectory Input Description 48

D. Space Trajectory Input Forms 48

E. Powered Flight Input Description 56

F. Powered Flight Input Forms 66

CONTENTS (Cont'd)

IX. Description of the Output Variables 78
A. Monitor Output Description 78
B. Space Trajectory Output Description 80
C. Powered Flight Output Description 100
Appendixes:
A. 1401 Write-Ups 104
B. Subroutine Write-Ups 108
C. Monitor Main Program (TPWRT), One-Card Loader, and Three-Card Loader 145
D. Details of Special Options for the Space Trajectory Program 155
E. Flow Diagrams of the JPL Trajectory Monitor System . . . 171
F. Monitor Search Parameters 183
G. Test Cases 189
References 311

TABLES

1. Job 1 27
2. Job 2 28
F-1. Monitor Search Parameters 184

FIGURES

1. Format of symbolic deck 23
2. Diagram of job setups 26
3. Format of trajectory input deck 35
4. Format of deck setup 37

I. INTRODUCTION

11098

The Trajectory Monitor System currently in use at the Jet Propulsion Laboratory has been recorded on magnetic tapes for distribution. This Section Report is to accompany copies of those tapes and describes the capability of the Trajectory Monitor System, the contents of the recorded information on the magnetic tapes, how a user can transfer this information to cards and printed listings, and how a user can set up, modify, and operate the system.

Also included are subroutine write-ups, input and output forms and explanations, and results of test cases that can be utilized for comparison purposes.

A flow diagram of the trajectory monitor subroutine MON is included and the interface with the programs under the trajectory monitor is described.

The trajectory programs under the Trajectory Monitor System are the Powered Flight and the Space Flight Programs.

AUTHOR

II. COMPUTER CONFIGURATION

The JPL Trajectory Monitor System is programmed in the symbolic FORTRAN Assembly Program (FAP) language. The system will operate on a two-channel (A and B) IBM 7090 or 7094 with at least five tape units on channel A and at least four tape units on channel B. (For maximum output capability six tape units are needed on channel B.) Channel A must also have an on-line card reader and an on-line printer. It should also be noted that at JPL a clock is sensed through the on-line printer. Since it is unlikely that the user installation will have the same on-line printer board and clock configuration as JPL, the computer may hang on a channel A select. There is no single remedy for this trouble, so each installation will have to overcome this problem if it occurs.

The tape units needed on channel A and B are described in the following table:

Unit	Density	Mode	Description
A1	hi	Binary	FORTRAN system
A2	hi	BCD	Input tape
A3	hi	BCD	Output tape
A4	hi		FORTRAN system scratch
A8	hi	Binary	n-body ephemerides
B2	hi		FORTRAN system scratch
B3	hi		FORTRAN system scratch
B4	hi		FORTRAN system scratch
B5	hi	Mixed	Trajectory SAVE tape (function of input to trajectory programs)
B8	hi	Binary	Trajectory monitor system
B9	lo	Binary	Output which is in a format suitable for input to the Stromberg-Carlson 4020 Plotter (function of input to trajectory programs)

The sense switches have the following functions:

Sense Switch	Use
1-off	FORTRAN selects the on-line card reader whenever it encounters an ENDTAPE on input tape A2 (see Section IV-C for definition of ENDTAPE). If an operator presses the "start" button on the card reader and if there are no cards in the card reader then three end-of-file marks are written on output tape A3. Then sense switch 1-off flags FORTRAN to halt for operator action.
1-on	Same as 1-off except that output tape A3 is rewound and unloaded prior to the halt for operator action.
2-off	2-off flags FORTRAN to use B5 as the tape unit that has the FORTRAN system library tape. This tape is not included in the system so sense switch 2 must always be on.
2-on	2-on flags FORTRAN to use A1 as the tape unit that has the FORTRAN system library tape.
3-off or on	no use
4-off or on	no use
5-off	5-off flags the trajectory monitor subroutine MON and the trajectory programs to get their input from A2.
5-on	5-on flags the trajectory monitor subroutine MON and the trajectory programs to get their input from the on-line card reader.
6-off	6-off flags the trajectory monitor subroutine MON and the trajectory programs to output to A3.
6-on	6-on flags the trajectory monitor subroutine MON and the trajectory programs to output to A3 and to the on-line printer. This switch is live during a trajectory.

The enter keys (ENK) instruction is not used.

The multiple tag mode is used (i. e., an instruction with a tag of 3 is interpreted as both index registers 1 and 2 in a "logical or" sense.) (See Ref. 1, p. 8, for more details.)

Appendix A contains a write-up of the 1401 general program. A deck has been enclosed with the system tapes.

III. JPL TRAJECTORY MONITOR SYSTEM: ITS CAPABILITY

A. Introduction

The JPL Trajectory Monitor System was written to be a trajectory design tool. Thus its capabilities are concerned mostly with targeting, obtaining partials, and buffering input between its two major programs in order to carry out its functions.

Before discussing capabilities, we must first consider the manner in which the input to the two major programs is buffered. The core that lies between the monitor subroutines and the system origin is divided into three regions. The core that starts at the system origin is reserved from location 100_{10} to 200_{10} for input to the Space Trajectory Program. The monitor uses the next 100_{10} locations. Following this region is the input region of the Powered Flight Program, which extends to location 1110_{10}. The monitor uses the next 90_{10} locations for input and storage. From location 1200_{10} to the start of the monitor subroutine, the core is taken up with subroutines that satisfy one or both of the following conditions:

1. The monitor uses the subroutine.
2. The subroutine is used by both the Space Flight and Powered Flight Programs.

All core below the monitor subroutine is considered to be a part of the monitor; thus, since the monitor remains in core throughout a batch of jobs, the input areas also remain in core, and can be altered only by the monitor or by input.

The most basic capabilities of the monitor consist of its ability to select either of the major programs from the monitor tape, buffer the terminal conditions of a powered flight trajectory for later use as injection conditions for the space trajectory, and run the programs in sequence. With these capabilities, the targeting becomes a rather simple achievement.

B. Targeting Methods

The monitor uses two methods for targeting. The best known method is the standard Newton-Raphson scheme. The second is a quadratic method (often called a one by two search) in which the independent variable is varied to obtain "near" convergence in two dependent variables.

Perhaps one of the most important features that a targeting system can have is that it works with linear dependent variables. At JPL we have focused most of our targeting on one set of dependent variables and use transformations, if necessary, to work in that system.

This system is a right-handed version of the system discussed in Ref. 2 . The modified $\overline{B}\cdot\overline{T}$, $\overline{B}\cdot\overline{R}$ system is extremely linear and its geometry is easy to visualize. Before discussing searching techniques, we will define the $\overline{B}\cdot\overline{T}$, $\overline{B}\cdot\overline{R}$ system. Let $\overline{S}^1$ be a unit vector parallel to the incoming asymptote referenced to the center of the target body and a plane of interest. This plane of interest passes through the center of the target body and can be parallel to the ecliptic plane or the Earth's equatorial plane. Define a vector $\overline{T}$ such that it is a unit vector, lies in the plane of interest, and is orthogonal to $\overline{S}$:

$$\overline{T}^1 = \left(\frac{Sy}{\sqrt{Sx^2 + Sy^2}} , \frac{-Sx}{\sqrt{Sx^2 + Sy^2}} , 0 \right) \tag{1}$$

Then define

$$\overline{R}^1 = \frac{\overline{S} \times \overline{T}}{|\overline{S} \times \overline{T}|} \tag{2}$$

If we translate these vectors to the center of the target body, we obtain Sketch 1.

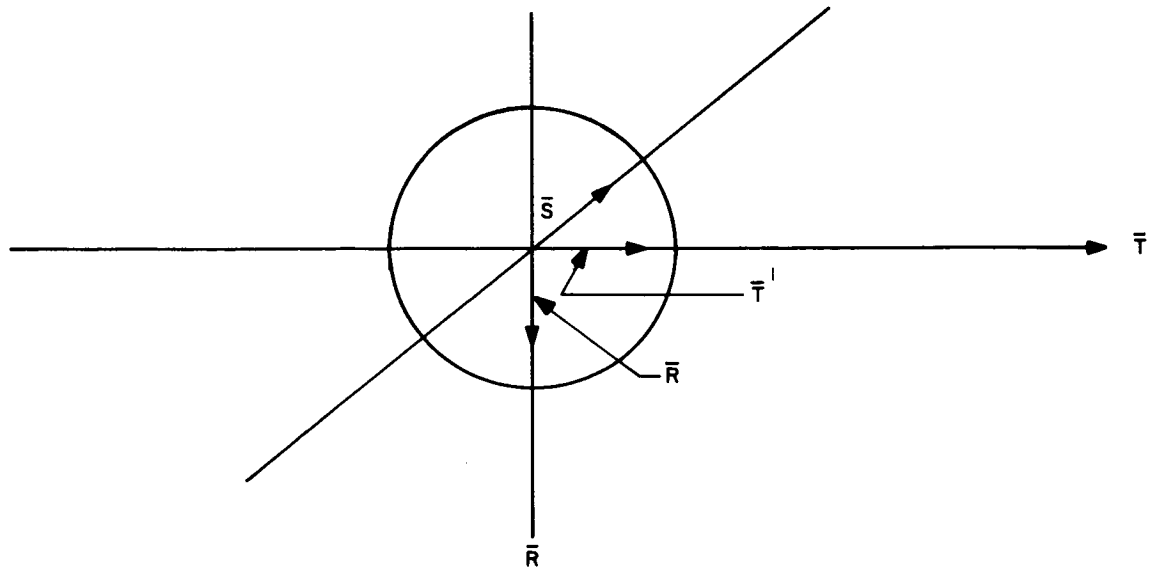

Sketch 1

The vector $\overline{B}$ is defined to lie in the plane of $\overline{R}$ and $\overline{T}$ and is drawn from the center of the target planet perpendicular to the approach asymptote $\overline{S}$ as shown in Sketch 2.

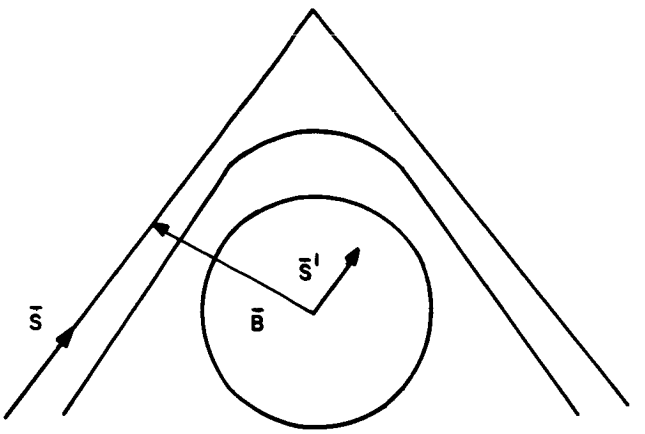

Sketch 2

The quantities $\overline{B}\cdot\overline{T}$ and $\overline{B}\cdot\overline{R}$ are merely the scalar projections of $\overline{B}$ onto the axis defined by the $\overline{T}$ and $\overline{R}$ vectors, as shown in Sketch 3.

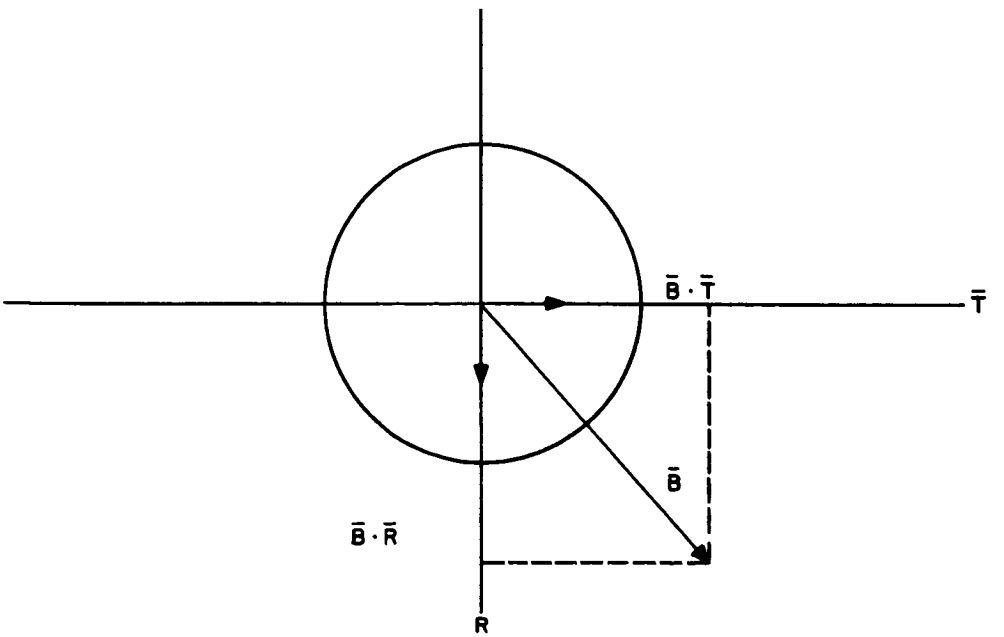

Sketch 3

Since all of our missions are hyperbolic about the target body, we have a well-defined set of variables to work with. The linearity of the set arises from the fact that for reasonable perturbations at injection the S vector is translated, but not rotated at the target.

Since this set requires only two degrees of freedom, and we essentially have three leaving the Earth, we generally work with a third dependent variable. For our third dependent variable, we most often use either time of flight[1] or Julian date of arrival.

The monitor need not restrict itself to the above set of dependent variables; it can, in fact, use any dependent variables computed by the program doing the searching.

For the ordinary N x N Newton-Raphson search, the monitor brings in the specified program and turns control over to the searching driver. This driver runs a nominal trajectory to obtain the column vector of miss components, C. The N^2 partials are obtained by running N perturbed trajectories and differencing. Having obtained the matrix, A, of partials, the search routine solves the equation

$$A \Delta \overline{X} = \overline{C} \tag{3}$$

to obtain the increments to the (launch) injection conditions to null the miss. Experience has shown that the partials obtained by differencing are good for three iterations; thus, the partials are kept for three iterations and, if convergence is not obtained, a second set of partials is computed by running N more perturbed trajectories about the last iteration and differencing. This second set of partials is allowed three iterations. If convergence has not been obtained in nine iterations, the monitor abandons the search and cycles for the next job. In practice, searches rarely diverge, and when they do, input errors are the usual cause.

[1] Time of flight is defined as time from some known epoch to either impact or closest approach at the target body.

The quadratic one by two search mentioned earlier has the following form:[2]

Let Q be an independent variable (generally Q is seconds past midnight of launch day). Then

$$\overline{B}\cdot\overline{T}_w = \overline{B}\cdot\overline{T}_0 + \frac{\delta\overline{B}\cdot\overline{T}}{\delta Q}\Delta Q \tag{4}$$

$$\overline{B}\cdot\overline{R}_w = \overline{B}\cdot\overline{R}_0 + \frac{\delta\overline{B}\cdot\overline{R}}{\delta Q}\Delta Q \tag{5}$$

where $\overline{B}\cdot\overline{T}_w$ and $\overline{B}\cdot\overline{R}_w$ denote the values of $\overline{B}\cdot\overline{T}$ and $\overline{B}\cdot\overline{R}$ wanted and $\overline{B}\cdot\overline{T}_0$ and $\overline{B}\cdot\overline{R}_0$ denote those obtained on the nominal trajectory.

Since

$$\overline{B}_w^2 = \left(\overline{B}\cdot\overline{T}_w\right)^2 + \left(\overline{B}\cdot\overline{R}_w\right)^2 \tag{6}$$

we have

$$\begin{aligned}\overline{B}_w^2 = &\left(\overline{B}\cdot\overline{T}_0\right)^2 + 2\left(\overline{B}\cdot\overline{T}_0\right)\frac{\delta\overline{B}\cdot\overline{T}}{\delta Q}\Delta Q + \left(\frac{\delta\overline{B}\cdot\overline{T}}{\delta Q}\right)^2\Delta Q^2 \\ &+ \left(\overline{B}\cdot\overline{R}_0\right)^2 + 2\left(\overline{B}\cdot\overline{R}_0\right)\frac{\delta\overline{B}\cdot\overline{R}}{\delta Q}\Delta Q + \left(\frac{\delta\overline{B}\cdot\overline{R}}{\delta Q}\right)^2\Delta Q^2\end{aligned} \tag{7}$$

then

$$\begin{aligned}\overline{B}_w^2 - \left(\overline{B}\cdot\overline{T}_0\right)^2 - \left(\overline{B}\cdot\overline{R}_0\right)^2 = &\,2\left(\overline{B}\cdot\overline{T}_0\right)\frac{\delta\overline{B}\cdot\overline{T}}{\delta Q}\Delta Q + \left(\frac{\delta\overline{B}\cdot\overline{T}}{\delta Q}\right)^2\Delta Q^2 \\ &+ 2\left(\overline{B}\cdot\overline{R}_0\right)\frac{\delta\overline{B}\cdot\overline{R}_0}{\delta Q}\Delta Q + \left(\frac{\delta\overline{B}\cdot\overline{R}}{\delta Q}\right)^2\Delta Q^2\end{aligned} \tag{8}$$

[2] The derivation of this method is the work of Victor C. Clarke, Jr. and William Kizner, both engineers at JPL.

To minimize the left-hand side of Eq. (8) we differentiate with respect to ΔQ and obtain

$$0 = 2\left(\overline{B}\cdot\overline{T}_0\right)\frac{\delta\overline{B}\cdot\overline{T}}{\delta\Delta Q} + 2\left(\frac{\delta\overline{B}\cdot\overline{T}}{\delta\Delta Q}\right)^2\Delta Q + 2\left(\overline{B}\cdot\overline{R}_0\right)\left(\frac{\delta\overline{B}\cdot\overline{R}}{\delta\Delta Q}\right) + 2\left(\frac{\delta\overline{B}\cdot\overline{R}}{\delta\Delta Q}\right)^2\Delta Q$$

Thus

$$\Delta Q = -\frac{\overline{B}\cdot\overline{T}_0\,\frac{\delta\overline{B}\cdot\overline{T}}{\delta Q} + \overline{B}\cdot\overline{R}_0\,\frac{\delta\overline{B}\cdot\overline{R}}{\delta Q}}{\left(\frac{\delta\overline{B}\cdot\overline{T}}{\delta Q}\right)^2 + \left(\frac{\delta\overline{B}\cdot\overline{R}}{\delta Q}\right)^2} \tag{9}$$

This type of search is powerful when used to null large misses; however, once it has brought the miss into a range of, say, 30 to 40 thousand kilometers, it is no longer useful and in most cases it will diverge. When targeting mission trajectories, the quadratic one by two is used to bring the miss vector quickly into a range where the N x N search can easily refine it.

The choice of the coordinate system in which the initial conditions are specified is extremely important. Because of this, the monitor is capable of transforming input injection conditions into various coordinate systems for searching. An example of a case where this is necessary is easily constructed. Assume that a search is being done using only the Space Trajectory Program and our energy and range at injection are fixed. We then would not want to use Cartesian coordinates as independent variables, but if we use spherical coordinates we may vary the angles with impunity and satisfy our energy and range restrictions. On the other hand, when doing targeting during midcourse maneuver calculations the Cartesian velocity components are much to be preferred, since velocity increments in this system are easily referenced to the spacecraft coordinate system.

C. Auxiliary Output

Once the preliminary trajectories have been targeted, they must be analyzed. The monitor provides an easy method of analyzing trajectories with its plotting capability. Through the monitor, the two major trajectory programs write a tape that we refer to as a SAVE tape. Each record of this tape contains time past the initial epoch and trajectory parameters. The set of

trajectory parameters has been chosen such that it contains those quantities most often plotted at JPL and sufficient other quantities so that it can serve as a spacecraft ephemeris. The SAVE tape is processed by the monitor plotting program to obtain a tape suitable for input to the Stromberg Carlson 4020 plotter.

Since the input regions for the two major programs are distinct and can be altered only by input or monitor functions, we can do the following in one machine pass:

1. Chain searches (i.e., we can start with a one by one search, followed by a two by two search, and follow that up with a three by three search, having to input initial conditions only once).
2. Search, using the Powered Flight Program, over a range of azimuths, buffering only the end results of the central azimuth for use as injection conditions for the Space Flight Trajectory Program; then after the last azimuth has been finished, run a space flight trajectory using the buffered conditions.
3. Search, using both the Space Flight and Powered Flight Program; then use the converged conditions to run a space flight trajectory, doing fine prints and making a SAVE tape simultaneously.
4. Print and punch the Space Flight Trajectory Program variational equations.

IV. FORTRAN SYSTEM

A. FORTRAN Interface With the JPL Trajectory System

The following steps indicate the flow of control during the execution of a trajectory job or jobs which have been set up according to Section VII-D, and have been loaded on tape A2:

STEP 1 To begin processing an input tape a START card and a DATE card are read via the on-line card reader. (For details of the formats of these two cards, see Section IV-C.) Hence, an operator must place the START card and then the DATE card 9-edge first, face down in the on-line card reader, press "reset" on the console, press "start" on the card reader, and then press "load cards" on the console. Control is then transferred to this start program. (For details of row binary cards used with the on-line card reader, see Ref. 1, p. 145).

STEP 2 The start program reads in the FORTRAN system from A1 and transfers control to it.

STEP 3 The FORTRAN system processes the ID card, senses the clock, prints the ID card image, the DATE card image, and the clock image on the on-line printer, and reads in and transfers control to the BSS loader portion of the FORTRAN system.

STEP 4 The BSS loader reads in the binary main program (hereafter called the three-card loader) starting at 144 (octal), prints the word "EXECUTION" on the on-line printer, and transfers control to 144 (octal). The three-card loader is coded to halt at location 150 (octal) to allow the operator to mount the necessary tapes. The operator must press "start" on the console to continue the job.

STEP 5 The three-card loader then reads the trajectory monitor subroutines from file one of tape B8. Control is then transferred to the subroutine MON by a transfer to 302 (octal).

STEP 6 The subroutine MON reads the trajectory monitor control cards, reads in the Space Trajectory Program or the Powered Flight Program and the necessary powered flight tables from file two of tape B8, initializes, reads in the initial conditions for the trajectory program in core at the time, and then transfers control to this trajectory program via the instruction CALL PUP. Entry back to MON is by TRA 1,4.

STEP 7 The subroutine MON will continue to monitor the trajectory job until the input from A2 is exhausted and a TRA 180 is encountered. This causes control to leave the trajectory monitor and return to the FORTRAN monitor.

STEP 8 The FORTRAN monitor will space down input tape A2 until an end-of-file mark is encountered. The clock is again sensed and the number of lines of output and the clock image are printed on the on-line printer. FORTRAN expects the next card image to be either the ID card of the next job or the ENDTAPE control card. (See Section IV-C for details of the ENDTAPE card, and Section II concerning sense switch 1.)

B. Some Particulars of the FORTRAN System

1. Locations 0 to 143 (octal) are reserved for the FORTRAN monitor. The BSS loader therefore begins all program loading at 144 (octal).

2. COMMON starts at 77152 (octal) and proceeds to low core. Locations 77153 (octal) and above are reserved for the FORTRAN system.

3. Upon successful loading of a program by the BSS loader, the loader prints a core map giving the order, start locations, entries, and length of the transfer vector for each subroutine.

4. By manually entering instruction TRA 100 (octal), an operator can terminate a job and request FORTRAN to proceed to the next job. By manually entering TRA 107 (octal), an octal core dump will be given before proceeding to the next job.

C. FORTRAN Control Cards

1. FORTRAN expects the first card of the job deck to be an ID card with the following format:

COLUMN	1	7	11	19
	*	AAA	XXXXXXX	YYYYYYYY

At JPL

AAA	is the programmer's initials.
XXXXXXX	is the program identification number.
YYYYYYYY	is the job charge number

2. If the execution phase of a job is desired the XEQ card must be present. The format of this card is:

COLUMN	1	7
	*	XEQ

3. FORTRAN expects the last card of the job deck to be an end-of-file card. This is a blank card except for a 7, 8, and 9 punch in column 1.

4. FORTRAN expects an end-of-tape (ENDTAPE) card after the end-of-file card of the last job. The format of the end-of-tape card is:

COLUMN	1	7
	*	ENDTAPE

5. To start processing an input tape under the FORTRAN system a machine operator must use a START card and a DATE card. The format of the DATE card is:

COLUMN	1	8	16
	*	DATE	06/15/63

6. The row-binary START card has the following format:

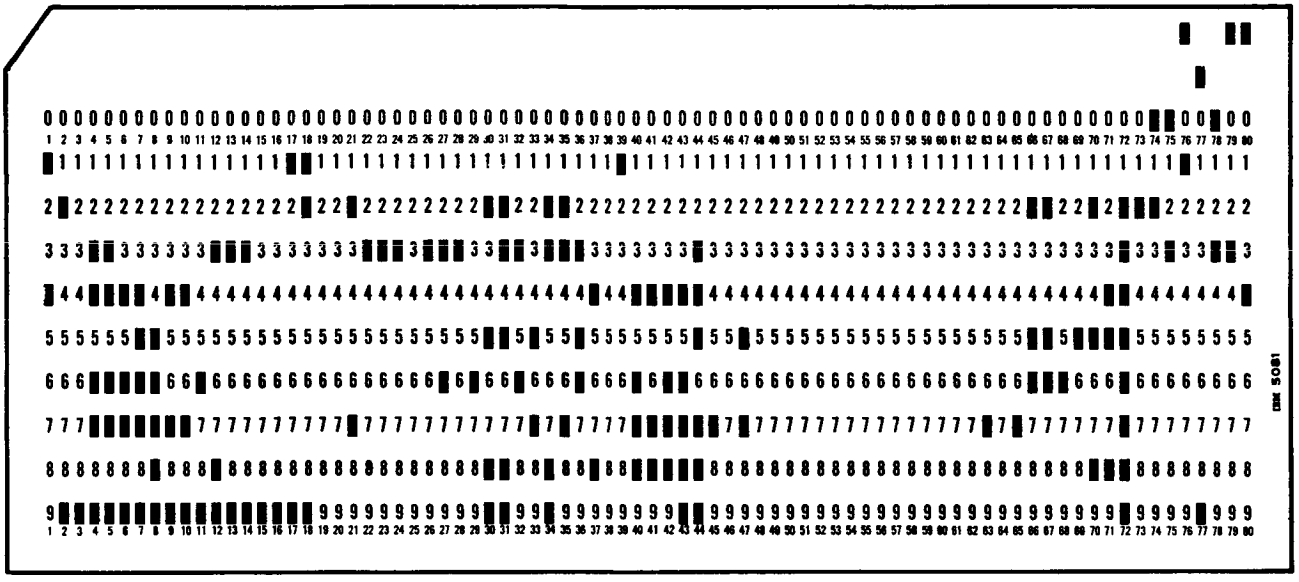

V. FORMAT AND DEFINITION OF INFORMATION ON THE MAGNETIC TAPES

The following list describes the labeled tapes sent to the user. Information of mode, number of files, and density of the tapes is included.

Label	Description
JPL-A JPL-B JPL-C	This tape contains three separate files of BCD information. File 1: (JPL-A) contains the symbolic cards for the Trajectory Monitor and the Space Trajectory Program and all common subroutines. File 2: (JPL-B) contains the symbolic cards for the Powered Flight Program, except for those subroutines which are needed by the monitor or Space Trajectory Program. These subroutines are found in the first file (JPL-A). File 3: (JPL-C) contains the symbolic cards for the program to write the Powered Flight Program's tables on tape and these tables in symbolic form. All three files on this tape were written in high density. The tape is blocked and can be updated.
JPL-D	This tape is mixed BCD and binary mode and is the input tape from which the trajectory program tape (JPL-E) is made. The tape contains three files written in high-density mode. The files contain the following: File 1: The Trajectory Monitor and Space Trajectory Program subroutines used by the monitor or the Powered Flight Program all in binary. In addition, the necessary control and data cards needed are included in the order required for the entire set of card images to be a "job" ready for the FORTRAN monitor to process.

Label	Description
JPL-D (Cont'd)	File 2: The Powered Flight Program and the necessary cards are included to make this file a second "job" for the FORTRAN monitor to process. File 3: The program that writes the Powered Flight Program's tables onto the trajectory monitor production tape (JPL-E) in binary mode followed by the BCD images of the tables themselves. In addition, those cards necessary to make this a third "job" for the FORTRAN monitor.
JPL-E	The trajectory monitor production tape: This tape was written in high density and is in binary mode. It contains two files: File 1: Contains the Trajectory Monitor and those subroutines used by either the monitor, the Space Trajectory Program or the Powered Flight Program. File 2: Contains the Space Trajectory Program minus those subroutines found in file 1, the Powered Flight Program, and the Powered Flight Program's tables. This contains 2 + n records, where the first two records are the two programs mentioned above and the n remaining records are the number of records necessary to house the Powered Flight Program's tables, one record per table.
JPL-F	This tape contains the n-body ephemeris. It is one file written in high density and in binary mode. For a description of this tape, see the subroutine writeup ANTR in Appendix B. It spans the period January 11, 1950, to July 27, 1981.

Label	Description
JPL-G	This is the standard JPL FORTRAN II version 2 monitor. The tape contains four files. It was written in high density and is all in the binary mode. The files contain the following: File 1: FAP Assembly Routine, which is part of the basic monitor. File 2: FORTRAN Compiler, also a basic part of the monitor. File 3: Library subroutines (none of which are necessary for the JPL Trajectory Monitor System). File 4: General diagnostic programs.
JPL-H	This tape contains the cards for the check cases in Appendix G, the BCD images of the three-card loader, and the BCD images of the one-card loader. There are six files on this tape: Files 1-4: The trajectory check-case cards in BCD preceded by the three-card loader in binary. File 5: The BCD symbolic card images of the three-card loader ready for assembly. File 6: The BCD symbolic card images of the one-card loader ready for assembly. This tape was written in high density.

VI. SYSTEM GENERATING PROCEDURE

A. JPL's Procedure for Generating the Master Set of Tapes

In this Section, a description is given by stages of how the tapes described in Section V were generated at JPL. This information should prove of some value in making use of the system so generated. The stages described below represent, in general, separate machine passes either on the 1401 or 7090/7094.

STAGE 1 The symbolic cards for the various subroutines and main programs were read onto magnetic tapes on the 1401, making tapes containing the information that Tape JPL-A, JPL-B, JPL-C contains, and on separate tapes.

STAGE 2 The symbolic tapes obtained from Stage 1 were used as input to the FORTRAN system on the 7090/7094 to obtain as output the blocked and updatable tape, which is tape JPL-A, JPL-B, JPL-C.

STAGE 3 The FORTRAN system on the 7090/7094 was used with the JPL-A, JPL-B, JPL-C tape as input, one job at a time, to obtain binary deck images on magnetic tapes of the assembled programs and subroutines and listings of these assemblies.

STAGE 4 The binary decks were punched from the magnetic tapes produced by Stage 3 and manually arranged in the proper order to make the tape JPL-D (see Section VII-C).

STAGE 5 The binary deck constructed by hand in Stage 4 was written onto magnetic tape on the 1401 and produced JPL-D.

STAGE 6 The tape JPL-D was used as input to the FORTRAN system on the 7090/7094 to generate the tape JPL-E and load maps for the three jobs which are on the tape JPL-D. The load maps were produced by the BSS loader and listed on the 1401 from the magnetic tape image.

STAGE 7 The three-card loader and test cases were put onto a magnetic tape using the 1401 and became an input tape for the FORTRAN system on the 7090/7094 with the tapes JPL-E on B8 and JPL-F on A8. The check cases were run and output listings from magnetic tapes obtained by use of the 1401.

STAGE 8 The assembly listings obtained in Stage 3 were still on magnetic tape, and a 1401 program was used to make Stromberg-Carlson 4020-type tape which contained the images of the assembly listings. These Stromberg-Carlson tapes were run through the Stromberg-Carlson 4020 and microfilm of the listings was produced. (Reproduction of the 1401 check case listings appears in Appendix G).

B. User's Procedure for Transmitting the Data from Tapes to Punched Binary and BCD Cards and Printed Listings

Tape JPL-A, JPL-B, JPL-C contains the image of the symbolic subroutines making up the Trajectory Monitor System. These subroutines can be obtained on symbolic cards by using a 1401 and the JPL 1401 program. (See Appendix A for a complete explanation of the 1401 program.) By assembling these subroutines on an IBM 7090/7094, printed listings and column binary cards can be obtained for every subroutine. To get the printed listings and binary cards, the following steps must be taken:

1. Mount tapes on an IBM 7090/7094 as follows:

Unit	Description	
A1	JPL-G	
A2	JPL-A (then JPL-B, then JPL-C) for Jobs 1, 2, and 3 all on one tape if update procedure used	
A3	Output tape for 1401 listing (contains printed listings and binary punched cards)	
A4	Scratch	Necessary for JPL FORTRAN system when assembling
B2	Scratch	
B3	Scratch	
B4	Scratch	

2. Put sense switch 2 down, all others up on the 7090/7094.
3. Go through the start procedure as explained in Section VII-A, steps 4 and 5.
4. The output tape A3 can be processed on the 1401 using the general 1401 program (see Appendix A). Put sense switches A, D, and E up on the 1401 and the tape on Unit 3 on the 1401.
5. Tapes JPL-D and JPL-H should be punched on the 1401 using the general 1401 program. (Put sense switches A, D and E up on the 1401 and the tapes on Unit 3.) The punched cards from JPL-D should contain all the binary decks obtained from the assembly of JPL-A, JPL-B and JPL-C, but with additional control and data cards. The punched cards from JPL-H will be the four test cases. (Each test case has in front of it the binary deck of the three-card loader.) Also the symbolic cards for the one- and three-card loaders will be punched from JPL-H.
6. Tapes JPL-E, JPL-F and JPL-G are binary program and binary data tapes and are to be used exactly as they are.

VII. OPERATING PROCEDURE

A. Running the Check Cases Using the Distributed Tapes

Enough information has been supplied so that without any preparation, the four test cases can be run. In fact, if the user is completely satisfied with the Trajectory Monitor System, he would have only to learn to input to the program, set up the input decks, and run his "production" jobs (see Section VII-D).

To run the test cases, the following steps should be taken, in the order given:

1. Mount scratch tapes on the 7090/7094 on Units B2, B3, B4, A3 and A4 and ready the units in high density.
2. Mount tapes JPL-E on B8, JPL-F on A8, JPL-G on A1 and JPL-H on A2 and ready the units in high density.
3. Sense switch 2 down (on); all others up (off).
4. Place the START card and then the DATE card, 9-edge first, face down, in the on-line card reader.
5. Press "reset" on the console. Hold the "start" button on the on-line card reader down until the card reader stops reading cards, then press "load cards" on the console.
6. At the beginning of each check case, a program stop will occur at location 150_8. This is to allow time for the mounting of tapes by operators before proceeding. If everything is set, press "start" on the console.
7. The output will go on scratch tape A3. At the end of the fourth test case, the on-line card reader will be selected. Put sense switch 1 down and press "start" on the on-line card reader. A3 will be rewound and unloaded automatically.
8. Take the tape from A3 and process it as a BCD output tape on the 1401. A 1401 program is included in card form and write-up for it is in Appendix A. The output listing should be identical to the output listing in Appendix G.

B. Assembling a Symbolic Subroutine

If the user desires to modify a subroutine, then he must recode or code in the addition to the symbolic subroutine and reassemble the resulting symbolic

deck to obtain a column binary deck which will replace the binary deck in use. The symbolic deck must be submitted for assembly in the following format:

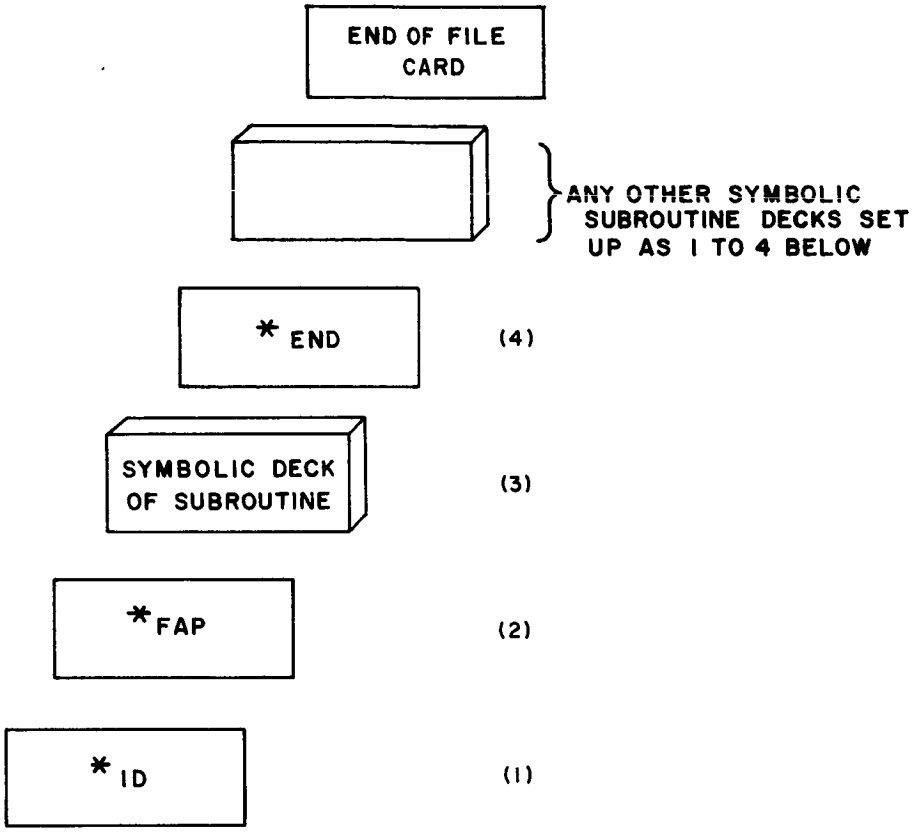

Fig. 1. Format of symbolic deck

The procedure for running the job is as follows:

1. Load the deck onto a scratch tape using the 1401 and the general 1401 program. (Put sense switches A and B up and a tape on Unit 2) This is the input tape for the 7090/7094.
2. The machine configuration is as follows for tapes on the 7090/7094:

Unit	Description
A1	JPL-G
A2	Input tape prepared in 1 above
A3	Output tape for processing on the 1401
A4	Scratch tape
B2	Scratch tape
B3	Scratch tape
B4	Scratch tape

3. Put sense switch 2 down (on) and all others up (off).
4. Go through the procedure outlined in Section VII-A, steps 4 and 5. (This involves the START card and DATE card).
   If the assembly is successful, the binary card image will be put on B4 temporarily and at the end of the job, the FORTRAN system will transfer these images to the output tape A3 following the BCD listing of the subroutine. This tape can then be printed and the cards punched using the 1401 and the 1401 general program to get the assembly listing and the column binary deck. The first card of the binary deck will be an identification card (ID-card) and must be discarded before making use of the binary deck.

C. Inserting the Resulting Binary Cards into the Binary Program Input Deck and Writing a New Trajectory Monitor System Tape

If the steps given in Section VI-B were performed by the user, then there will exist a binary deck of cards (including a few control cards and BCD data cards) made up of three jobs. The binary deck obtained from the assembly procedure mentioned in Section VII-B should replace the "old" binary deck of the same name. Then the entire deck should be put on tape via the 1401.

The 7090/7094 machine configuration is as follows:

Unit	Description
A1	JPL-G
A2	Input tape continuing the three jobs
A3	Output tape for 1401
A4	Scratch
B2	Scratch
B3	Scratch
B4	Scratch
B8	Tape to be written which will contain the "new" JPL trajectory monitor system

Place sense switch 2 down (on) and all others up (off). Use the start procedure with the START card and DATE card explained in Section VII-A, steps 4 and 5.

The diagram in Fig. 2, Tables 1 and 2, and Job 3 Loading Description show how these three jobs are set up and what the trajectory program tape (B8) looks like at the end of each job.

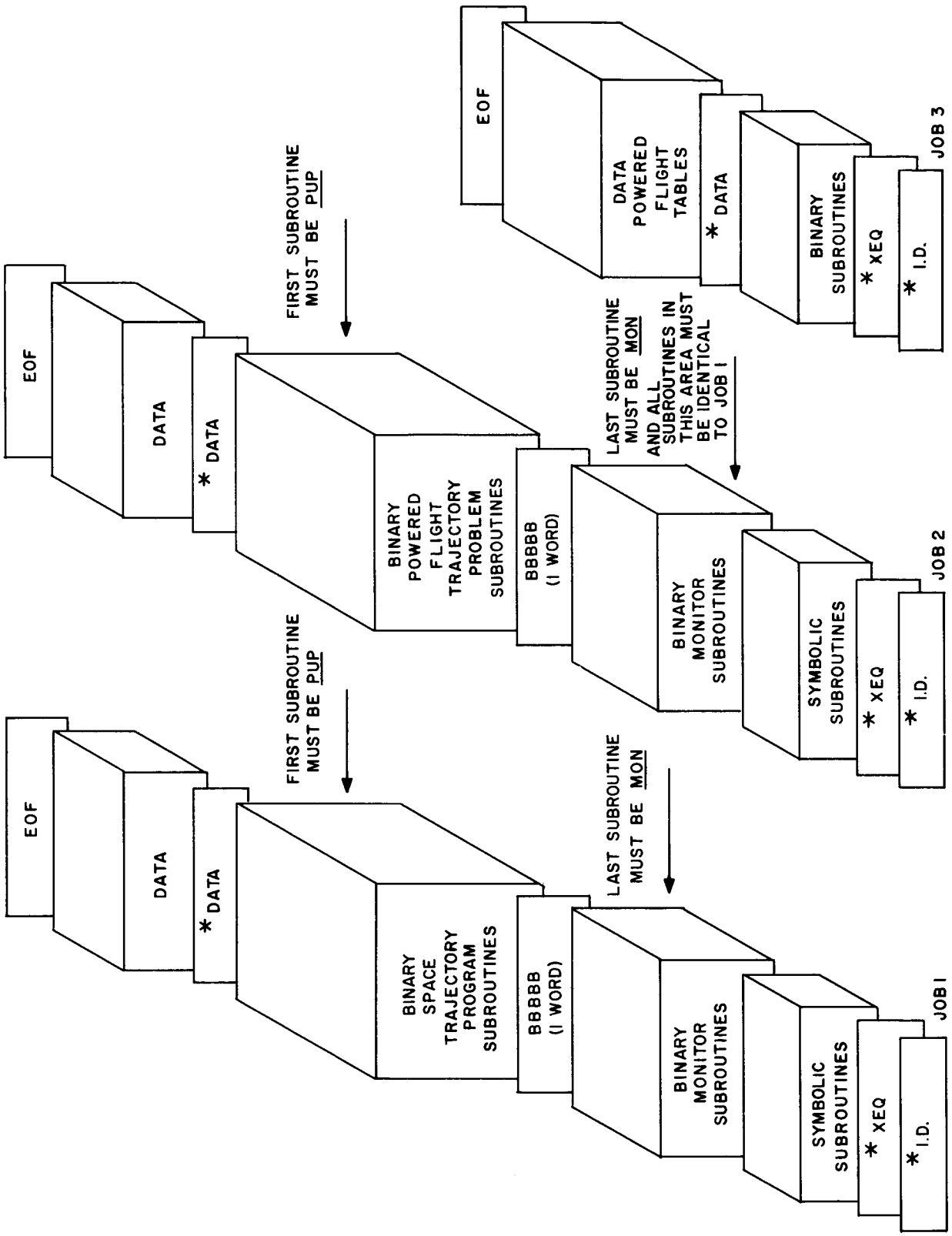

Fig. 2. Diagram of job setups

Table 1. Job 1

CORE:	0 – 143	144 – BBBBB	BBBBB+1	70000	70001 – 77777
	FORTRAN MONITOR	TRAJECTORY MONITOR	ONE WORD	TRAJECTORY PROGRAM	UNUSED

The main program of Job 1 (TPWRT) does the following:

1. Inputs a number 1 into location 100, sets addresses and decrements.
2. Computes the length of the monitor including its checksum as BBBBB-100+1.
3. Writes the number computed in 2 in a 1 word record on tape.
4. Forms the checksum of the monitor, i.e., from 100 to BBBBB-1 inclusive and stores this checksum into BBBBB.
5. Writes the monitor and its checksum as one record onto tape, i.e., from 100 to BBBBB inclusive.
6. Writes an end-of-file onto tape.
7. Inputs a number 2 into location 100, sets addresses, decrements.
8. Forms the checksum of TRAJ, i.e., from BBBBB+1 to 70000 inclusive and stores the checksum into BBBBB.
9. Writes TRAJ and its checksum onto tape, i.e., from BBBBB to 70000 inclusive.
10. Exits

TAPE AT END OF JOB 1	ONE WORD	EOR	MONITOR, MONITOR CHECKSUM	EOF	TRAJ CHECKSUM, TRAJ	EOR	. . .

LENGTH OF MONITOR INCLUDING CHECKSUM

Table 2. Job 2

	0 – 143	144 – BBBBB	BBBBB+1 – 70000	70001 – 77777
CORE:	FORTRAN MONITOR	TRAJECTORY MONITOR	ONE WORD	POWFLY PROGRAM	UNUSED

The main program of Job 2 (TPWRT) does the following:

1. Inputs a number 2 into location 100, sets addresses, decrements.
2. Forms the checksum of POWFLY, i.e., from BBBBB+1 to 70000 inclusive and stores the checksum into BBBBB.
3. Writes POWFLY and its checksum onto tape, i.e., from BBBBB to 70000 inclusive.
4. Exits.

TAPE AT END OF JOB 2	ONE WORD	EOR	MONITOR, MONITOR CHECKSUM	EOF	TRAJ CHECKSUM, TRAJ	EOR	POWFLY CHECKSUM, POWFLY	EOR	. . .

LENGTH OF MONITOR INCLUDING CHECKSUM

Restrictions Applying to Tables 1 and 2

JOB 1 and JOB 2

a. The last subroutine in the binary monitor subroutines must be the subroutine MON.

b. This must be followed by the 1-word subroutine BBBBB.

c. This must be followed by the first subroutine of the Space Trajectory Program or Powered Flight Program and this subroutine must be PUP.

JOB 2

From the preceding discussion, it can be seen that the binary decks making up the monitor are needed only for purposes of insuring that BBBBB falls at the same location as it did in JOB 1.

Hence, to reduce the size of the binary deck, one can insert only the program card(s) and subsequent card(s) that have the transfer vector on them for each of the binary subroutines in the monitor area of JOB 2 except those subroutines used by the main program TPWRT, i.e., INP1, EXIT, DOUT, (TES).

JOB 1 and JOB 2

Any FAP (symbolic) subroutine that is inserted in the front of the tray will take precedence over the binary subroutine (in the job) of the same name, but the subroutine gets loaded in core last, i.e., after all other binary subroutines are loaded. Hence any FAP subroutine in the monitor area must be assembled alone and the old and new versions of the binary deck must be exchanged.

JOB 3 Loading Description

This program reads in data to define a set of tables and then writes these tables as separate records on the monitor tape.

Data are read by INP1 and must, therefore, conform to INP1 requirements. The tables are read in as groups of a given size and in a certain order; therefore, the data must be assembled in this order for input. The number of tables for each group is input preceding each group. There are six different groups, as follows:

1. Agena motors
2. Centaur motors
3. Launch pads
4. Drag polynomials
5. Azimuth tables (Cartesian coordinates)
6. Azimuth tables (polar coordinates)

Each table is preceded by a BCD card with the name (six characters or less) to be assigned to the table. This name is entered in location 900. The data for the table then follow the name. All data are entered in the same locations as outlined on the input sheets for the Powered Flight Trajectory Program. Following is a breakdown of the required information:

1. Agena Motor Table

Nineteen (19) numbers are required for each table as follows:

Location	Explanation	Symbol
913	Thrust	F_0
914	Exhaust area	F_e
916	Empty weight	W_e
917	Fuel flow rate	$\dot{W}_p$
919	Diameter	d
920	Drag coefficient	C_{di}
921	Burning time	T_b
922	Burn guidance	GDB
924	Coast guidance	GDC
925	Thrust	F_0
926	Exhaust area	F_e
928	Empty weight	W_e

Location	Explanation	Symbol
929	Fuel flow rate	$\dot{W}_p$
931	Diameter	d
932	Drag coefficient	C_{di}
934	Burn guidance	GDB
935	Coast time	T_c
936	Coast guidance	GDC
352	Initial motor = 2.0	

2. Centaur Motor Table

Twenty-nine (29) numbers are required for each table as follows:

Location	Explanation	Symbol
901	Thrust	F_0
902	Exhaust area	F_e
904	Empty weight	W_e
905	Fuel flow rate	$\dot{W}_p$
907	Diameter	d
908	Drag coefficient	C_{di}
909	Burn time	T_b
910	Burn guidance	GDB
912	Coast guidance	GDC
913	Thrust	F_0
914	Exhaust area	F_e
916	Empty weight	W_e
917	Fuel flow rate	$\dot{W}_p$
919	Diameter	d
920	Drag coefficient	C_{di}
921	Burn time	T_b
922	Burn guidance	GDB
923	Coast time	T_c
924	Coast guidance	GDC
925	Thrust	F_0
926	Exhaust area	F_e
928	Empty weight	W_e
929	Fuel flow rate	$\dot{W}_p$

Location	Explanation	Symbol
931	Diameter	d
932	Drag coefficient	C_{di}
934	Burn guidance	GDB
935	Coast time	T_c
936	Coast guidance	GDC
352	Initial motor = 1.0	

3. Launch Pads

Three (3) numbers are required for each table as follows:

Location	Explanation	Symbol
355	Initial height	h_0
356	Geodetic latitude	ϕ
357	Longitude	θ

4. Drag Polynomials

Twenty-four (24) numbers are required for each table as follows:

Location	Explanation	Symbol
435	Upper-limit first range	M_1
436	Upper-limit second range	M_2
437	Upper-limit third range	M_3
438	Upper-limit fourth range	M_4
439	Third-order coefficient	C_3
440	Second-order coefficient	C_2
441	First-order coefficient	C_1
442	Constant term	C_0
443-446	Same as 439-442 for second range	
447-450	Same as 439-442 for third range	
451-454	Same as 439-442 for fourth range	
455-458	Same as 439-442 for fifth range	

5. Azimuth Tables (Cartesian coordinates)

Nineteen (19) numbers are required for each table as follows:

Location	Explanation	Symbol
354	Initial time	t_0
358	Launch azimuth	σ_L
915	Gross weight	W_g
918	Fuel weight	W_f
927	Gross weight	W_g
930	Fuel weight	W_f
363	Initial Position Coordinates	$X_p(t_0)$
364		$Y_p(t_0)$
365		$Z_p(t_0)$
366	Initial Velocity Coordinates	$\dot{X}_p(t_0)$
367		$\dot{Y}_p(t_0)$
368		$\dot{Z}_p(t_0)$
1050	Initial time	t_0
1051	Initial lambda box number	
1052	Final time	t_f
1053	Final lambda box number	
413	Sense switch 4 = 0	
414	Sense switch 5 = 1	
415	Sense switch 6 = 1	

6. Azimuth Tables (polar coordinates)

Twenty-three (23) numbers are required for each table as follows:

Location	Explanation	Symbol
354	Initial time	t_0
358	Launch azimuth	σ_L
903	Gross weight	W_g
906	Fuel weight	W_f
915	Gross weight	W_g
918	Fuel weight	W_f
927	Gross weight	W_g
930	Fuel weight	W_f
503	Radius	R

Location	Explanation	Symbol
523	Geocentric latitude	ϕ
543	Velocity	V
563	Pitch angle	γ
583	Azimuth angle	σ
603	Longitude	θ
1050	Initial time	t_0
1051	Initial lambda box number	
1052	Final time	t_f
1053	Final lambda box number	
413	Sense switch 4 = 1	
414	Sense switch 5 = 0	
415	Sense switch 6 = 1	
382	Constant CHI	$\bar{X}_1$
386	Delta CHI	$\Delta\bar{X}_1$

Limitations

1. n + 6 records will be written on the monitor tape where n is the number of tables input.
2. An end-of-file is written on the monitor tape following the writing of the last table.
3. The monitor tape is assumed to be on tape unit B8 and positioned ready for writing of the tables.
4. Tape density is set to the high-density mode for writing the tables.

D. Setting Up and Running a Trajectory Job

Once a trajectory program tape (to go on B8) is available, then trajectory cases can be run by supplying a trajectory input deck to the FORTRAN Trajectory Monitor System. The format of every trajectory input deck is shown in the diagram in Fig. 3.

The running procedure is as follows:

1. Put the input on a scratch tape using a 1401 and the 1401 general program.

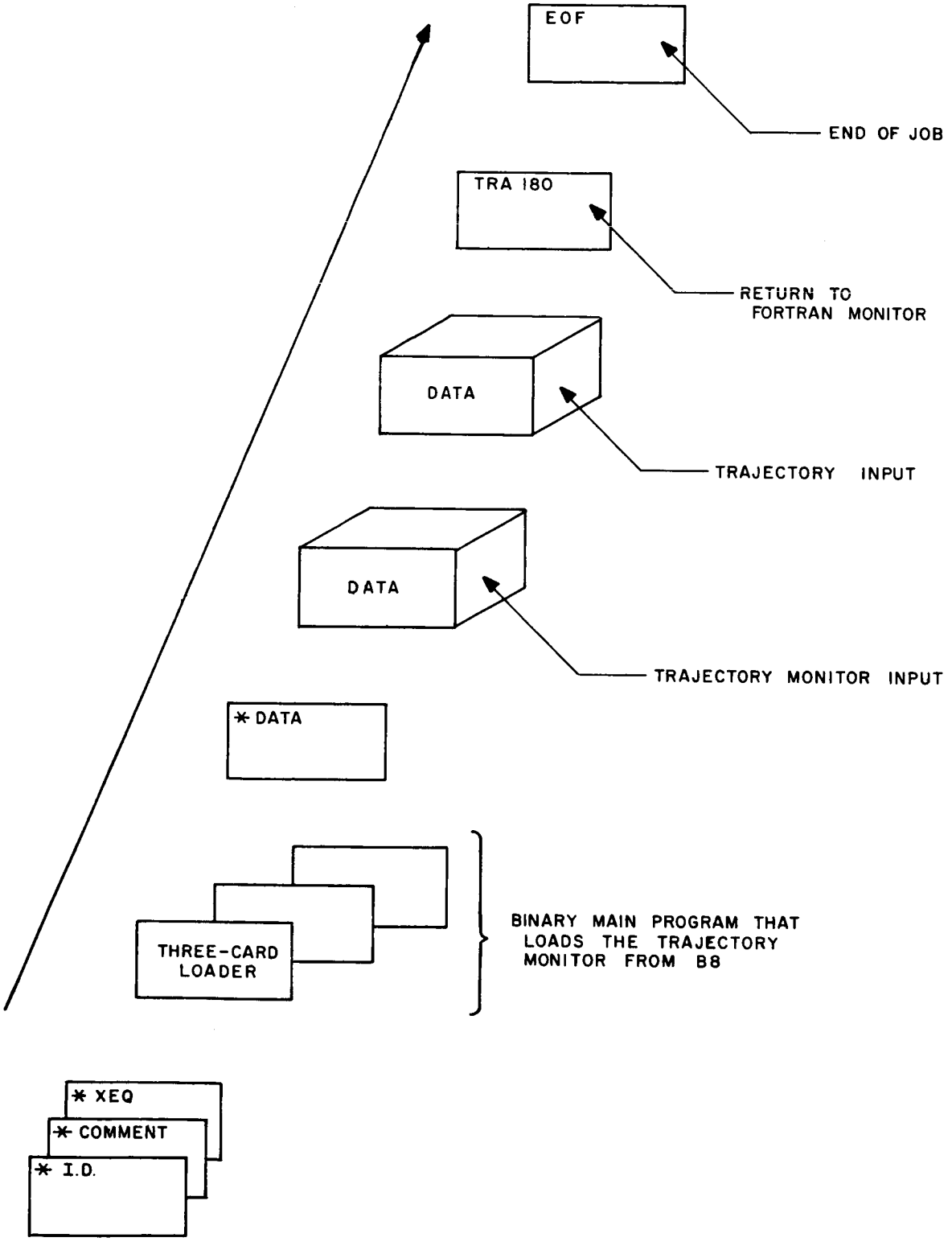

Fig. 3. Format of trajectory input deck

2. Mount the following tapes on the 7094:

Unit	Function or JPL Tape Number
A1	JPL-G
A2	Input tape made in 1 above
A3	Scratch for output to 1401
A4	Scratch
A8	JPL-F
B2	Scratch
B3	Scratch
B4	Scratch
B8	Trajectory Monitor System tape (JPL-E or a new version made by the user)
B5, B9	Scratch, if necessary (function of input)

3. Put sense switch 2 down, all others up.
4. Execute the start procedure with START and DATE cards as described in Section VII-A, steps 4 and 5.
5. At each 150_8 stop, hit "start" on the console after all tapes are properly mounted.
6. The output will go on A3. At the end of the cases a card reader select will hang channel A. Put sense switch 1 down and press "start" on the card reader. This rewinds and unloads A3.
7. Process the output tape A3 using a 1401 and the 1401 general program.

E. Operating Outside of the FORTRAN System

It is possible to run a case under the Trajectory Monitor System, but without the FORTRAN system. This is done at JPL during a mission and provides for the input to go on-line. The deck setup is shown in Fig. 4. The format of the one-card loader is given in Appendix C.

The running procedure is as follows:

1. Mount the tapes as defined below:

Unit	Function or JPL Tape Number
A3	Scratch for output
A8	JPL-F
B8	JPL-E

2. Put sense switches 2 and 5 down, all others up.
3. Put the input deck in the card reader, 9 edge face down, press "clear" on the console, press "start" on the card reader, press "load cards" on the console.
4. The output will go on A3 and the job will stop on a program stop at location 0. Manually write several end-of-files on A3, rewind and unload A3, and process the output on the 1401.

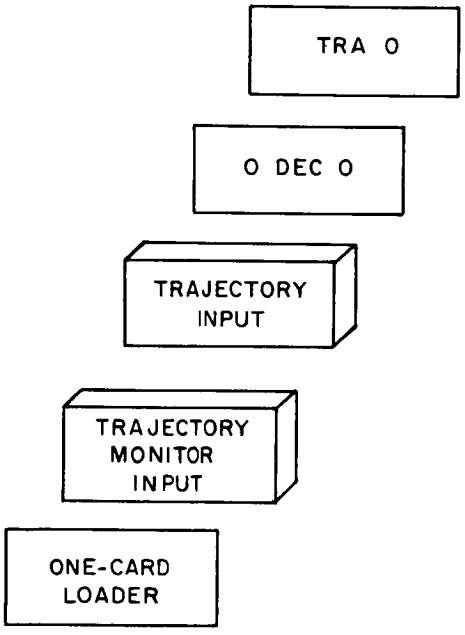

Fig. 4. Format of deck setup

VIII. DESCRIPTION OF THE INPUT QUANTITIES

A. Monitor Input Description

The monitor performs the functions of selecting programs, buffering input between them, driving them in various manners, printing partials and error comments and making SAVE tapes. The monitor is told what its functions will be for a particular run by means of BCD control words and decimal input. The following is a definition of the monitor control words.

1. Program Control Words

There are four program control words. These control words enable the monitor to select a program or sequence of programs from the monitor tape and in some cases they also select an option. All of these control words are read into decimal location 230. They are:

POWFLY
TRAJ
EXTEND
VRPNCH

The POWFLY control word causes the Powered Flight Program to be read into core. The manner in which the program is driven is determined by other control words.

The TRAJ control word causes the Space Flight Trajectory Program to be read into core. The manner in which the program is driven is determined by other control cards.

The EXTEND control word causes the Powered Flight Program to be read into core and the monitor to set a flag. Regardless of the manner in which the program is driven, at the conclusion of the powered flight trajectory, the Space Flight Trajectory Program is read into core, the terminal conditions of the Powered Flight Program are loaded into the initial condition buffers of the Space Flight Program and a space flight trajectory is run. At the end of the space flight trajectory, the Powered Flight Program is read back into core and control returned to it.

The VRPNCH control card causes the following option to be set up. Starting at symbolic location TVAR, up to twenty values of time past injection, in modified sexagesimal format, may be input. At these times, the values of the Earth-, Moon-, and Sun-centered positions and velocities of the spacecraft and the variational partials will be written in binary on tape B9 when a normal

printout is called for. Another quantity must be input to the program into symbolic location BCD-002 to determine the type of output which will be produced under the VRPNCH option. If

C(BCD-002)< 0, a normal trajectory printout will be produced, with the above-described output on B9, and no punched output of the variational equations for the end conditions will be produced.

C(BCD-002)= +0, no trajectory printout will be produced, and no output will be written on B9, but the variational equations at the end conditions of the trajectory will be written for off-line punching.

C(BCD-002) > 0, a normal printout will occur, with normal output on B9, and the variational equations at the end will be written for off-line punching.

If no times are supplied for TVAR, an error comment is written on B9, and the trajectory is computed and outputted as determined by BCD-002.

2. Search Control Words

Location

231_{10} BCD 1 SEARCH

BCD 1 NØ SEARCH

The SEARCH control word causes the monitor to set up for a search. If an ØBØ card is not present, the search will be an NxN search. If an ØBØ card is present, it will override the search card.

The NØ SEARCH control word merely tells the monitor that it is not to do an NxN search. If you are not searching there is no need to use this card.

231 is assembled as NØ SEARCH.

Location

233_{10} BCD 1 NØ ØBØ

BCD 1 ØBØ

The ØBØ control word causes the monitor to set up for a quadratic one by one search.

The NØ ØBØ control word merely tells the monitor that it is not to do a quadratic one by one search.

233 is assembled as NØ ØBØ.

Location

235_{10} BCD 1 CARTESIAN
BCD 1 SPØLAR
BCD 1 EPØLAR
BCD 1 SELENØ
BCD 1 ENERGY

The coordinate system control words are used to inform the monitor what coordinate system the independent variables of the search are expressed in when doing a search in the Space Flight Program. Very often one will want to search in a coordinate system that is different from the one in which the initial conditions are expressed. The monitor is capable of transforming the injection conditions

$$\text{from} \begin{Bmatrix} \text{CARTESIAN} \\ \text{SPØLAR} \\ \text{EPØLAR} \end{Bmatrix} \quad \text{to} \begin{Bmatrix} \text{CARTESIAN} \\ \text{SPØLAR} \\ \text{EPØLAR} \end{Bmatrix}$$

In doing these transformations the following assumptions are made:

1. The coordinates are expressed in a true of-date system.
2. The reference plane is invariant.

If an attempt is made to transform from SELENØ to CARTESIAN, an error comment is printed and the job aborted.

The CARTESIAN code word informs the monitor that the search coordinate system is inertial Cartesian.

The SPØLAR code word informs the monitor that the search coordinate system is inertial spherical.

The EPØLAR code word informs the monitor that the search coordinate system is Earth-fixed spherical.

The SELENØ code word informs the monitor that the search coordinate system is Moon-fixed spherical.

The ENERGY code word informs the monitor that the search coordinate system is energy asymptote.

The nominal condition is CARTESIAN.

Location

232_{10} BCD 1 PARTIALS
BCD 1 NØ PARTIALS

The PARTIALS control word informs the monitor that:

1. A search will be done.
2. The partials used in the searching are to be printed out at the start of each iteration.

The NØ PARTIALS control word informs the monitor that it is not to print partials.

The nominal condition is NØ PARTIALS.

Location

239_{10} BCD 1 EVERYN

BCD 1 EVERYT

When the monitor is doing an NxN search, it must be told how often to compute its matrix of partials. These two control cards perform this function.

The control card EVERYN tells the monitor to compute partials every three iterations, provided that 1121_{10} contains a zero.

The control card EVERYT tells the monitor to compute partials every iteration.

The nominal condition is EVERYN.

The monitor must obtain information concerning what the independent and dependent variables are and what their addresses are, and how much to perturb them to get partials if they are independent variables, or what their convergence tolerance is if they are dependent variables. This information is obtained in the following manner.

BCD representations of the independent variables are read into location 200_{10} through 200_{10} + N-1, where N is the degree of the search. The BCD representations of the dependent variables are read into loc 212_{10} through 212_{10} +N-1. The information required may now be obtained by table lookup. In the monitor there are three tables in one-to-one correspondence with each other. The first table consists of the BCD names representing the search variables, both independent and dependent. The second table is a list of the addresses of these variables. The third table consists of floating-point numbers, which are deltas for the independent variables and convergence criteria for the dependent variables. (See Appendix B, subroutine SRCH.)

For example, if we had only 2 variables V1 and V2, and their addresses were L(V1) and L(V2), then the table would look as follows:

BCD	BCD1	IV1	The external name of V1
	BCD1	IV2	The external name of V2

```
        DEC    0
ADD)    PZE    L(V1)
        PZE    L(V2)
RHØ     DEC    N(V1)
        DEC    N(V2)
```

Thus for a large class of search variables, it is sufficient to input only the BCD names representing the variables and the values desired. If it is desired to search using variables that are not in the monitor list, it is possible to input them into the list at execution time by means of Format II input, as defined in Ref. 3. A complete list of the search variables is contained in Appendix F.

The following additional decimal input is required when searching.

Location

1121_{10} DEC (number of search iterations)

This control word controls both the number of iterations and the manner in which partials are computed. When doing an NxN search, the nominal input is 1121_{10} DEC 0. If the EVERYN control card is input or if no location 239_{10} control card is present, the monitor will then do a maximum of 9 iterations, recomputing partials every 3 iterations. If the EVERYT control card is input, the monitor will do a maximum of 9 iterations, recomputing partials every iteration. If, when doing an NxN search we input

```
1121   DEC   K
 239   BCD   1 EVERYN
```

we will do a maximum of K iterations, computing partials only at the beginning. If we input

```
1121   DEC   K
 239   BCD   1 EVERYT
```

we will do a maximum of K iterations, recomputing partials every iteration. When doing an ØBØ search, partials are recomputed every iteration; thus we need not concern ourselves with the 239_{10} control card. For the ØBØ search, one must always input the number of iterations desired, since there is no nominal case.

The nominal condition is 1121_{10} DEC 0.

Location

1122_{10} DEC (degree of search)

When doing an NxN search, one inputs

1122 DEC N

When doing an ØBØ search, one must input

1122 DEC 2

The nominal condition of 1122_{10} is zero.

The following input is required to obtain extra partial derivatives.

Location

1120_{10} DEC (number of dependent variables $\leq$ 6 to be used in forming extra partials)

When the monitor is running varied trajectories to obtain partials for searching, it can also obtain partials of dependent variables not used in the search, but of interest to the requesting engineer. The input is

1120 DEC M

where M $\leq$ 6. The nominal condition for M is zero.

Location

218_{10} BCD N DV1 DV2...DVM

where the DVi's are BCD names representing the extra partial dependent variables. These BCD representations must be in the monitor BCD tables. This option can be used only in conjunction with the extra partials option.

Nominally, 218_{10} contains zeros.

The remaining monitor control cards are concerned with miscellaneous monitor functions.

Location

238_{10} BCD 1 NØ PLØT

BCD 1 PLØT

The PLØT control card informs the monitor that a SAVE tape will be made on the present case. The monitor initializes the tape-writing routine and end-files the tape at the end of the case.

The NØ PLØT card acts as a NØP with respect to plotting.

The nominal setting of 238_{10} is NØ PLØT.

Location

250_{10} ØCT XXXXXXXXXXXX

When making a SAVE tape, the monitor is capable of writing information from up to 5 tracking stations on the SAVE tape. This control word selects what stations will go onto the tape. It is identical in format with the 168_{10} card

in the Space Flight Program explained in Ref. 2, but the stations may be different.

The nominal condition of 250_{10} is a zero.

Location			
236_{10}	BCD	1	FØRDBH
	BCD	1	NØRMAL

The FØRDBH control card is used in conjunction with the control card PØWFLY. It causes the monitor to load the space flight initial-conditions buffer with the end conditions of the Powered Flight Program.

The NØRMAL control card acts as a NØP with respect to this function.

The nominal condition is NØRMAL.

Location			
237_{10}	BCD	1	SAVE
	BCD	1	NØ SAVE

When the monitor finishes a case, it normally destroys all monitor control words pertaining to the case.

The SAVE control card instructs the monitor not to destroy the code words at the end of a case.

The NØ SAVE control card instructs the monitor to destroy code words at the end of a case.

The nominal condition for 237_{10} is NØ SAVE.

The input for a case is logically divided into two sections:

1. Monitor input
2. The input for the program or programs

The monitor input is followed by a TRA 3,4 card. The input to a program does have TRA 3,4 cards for logical divisions of input to the program. Any Format II cards must be input with the input for program(s).

A TRA 4,4 card signifies the end of a logical block (not necessarily a case) and this <u>must</u> follow a TRA 3,4 card. This allows the monitor, after detecting certain errors, to file through the input remaining until a TRA 4,4 card or a TRA 180 card is encountered. If a TRA 4,4 card is encountered before a TRA 180 card and additional input exists between, the monitor will recycle and set up for the next logical block.

The TRA 180 card, when encountered, returns control to the FORTRAN Monitor System.

B. Monitor Input Forms

The following input forms can be key-punched from directly. The column headings for the card columns are identified at the top of each page. Not all information need be filled in for a given case.

JET-PROPULSION-LABORATORY
4800 OAK GROVE AVENUE
PASADENA, CALIFORNIA

PAGE

MONITOR ALL 30

CHECK HERE	LOC. 6	7	8 OP. 9	11	12	EXPLANATION	
	2.3.0		BCD		1.PØWFLY	PROGRAM OPTION	EGO 18 (POWERED FLIGHT) ONLY
	2.3.0		BCD		1.TRAJ✓✓		DBH 07 (SPACE TRAJECTORIES) ONLY
	2.3.0		BCD		1.EXTEND		COMBINED EGO 18 – DBH 07
	2.3.0		BCD		1.NRPNCH	VARIATIONAL EQUATIONS PUNCHING	
	2.3.1		BCD		1.NØ✓SEARCH	SEARCH OPTION	DO NOT SEARCH
	2.3.1		BCD		1.SEARCH		SEARCH
	2.3.5		BCD		1.CARTESIAN	SEARCH CO-ORD SYS.	SPACE-FIXED CARTESIAN
	2.3.5		BCD		1.SPØLAR		SPACE-FIXED POLAR
	2.3.5		BCD		1.EPØLAR		EARTH-FIXED POLAR
	2.3.5		BCD		1.SELENØ		SELENOGRAPHIC
	2.3.5		BCD		1.ENERGY		ENERGY ASYMPTOTE
	1.1.21		DEC			FX.PT.	NO. OF SEARCH ITERATIONS {0 ⟹ 9 ITERATIONS
	1.1.22		DEC			FX.PT.	DEGREE OF SEARCH

				NAMES:	INDEPENDENT -:
2.00		BCD			VAR1
2.01		BCD			VAR2
2.02		BCD			VAR3
2.03		BCD			VAR4
2.04		BCD			VAR5
2.05		BCD			VAR6

				NAMES:	DEPENDENT – :
2.06		BCD			VAR1
2.07		BCD			VAR2
2.08		BCD			VAR3
2.09		BCD			VAR4
2.10		BCD			VAR5
2.11		BCD			VAR6

				NAMES:	
98.0		BCD	4		AZIMUTH CONFIGURATION
98.1		BCD			MOTOR CONFIGURATION
98.2		BCD			LAUNCH PAD
98.3		BCD			DRAG POLYNOMINALS

J. NICKERSON 9/1/61

ALL-30-1

JET-PROPULSION-LABORATORY
4800 OAK GROVE AVENUE
PASADENA, CALIFORNIA

PAGE

MONITOR (CONT.) ALL 30

LOC.	OP.		EXPLANATION
			VAL. OF DEPENDENT —:
2.1.2	DEC		VAR1
2.1.3	DEC		VAR2
2.1.4	DEC		VAR3
2.1.5	DEC		VAR4
2.1.6	DEC		VAR5
2.1.7	DEC		VAR6
1.120	DEC		FLPT. NO. OF EXTRA PARTIALS TO BE COMPUTED
		NAMES:	EXTRA PARTIALS TO BE COMPUTED:
2.1.8	BCD		NO.1
2.1.9	BCD		NO.2
2.2.0	BCD		NO.3
2.2.1	BCD		NO.4
2.2.2	BCD		NO.5
2.2.3	BCD		NO.6

CHECK HERE	LOC.	OP.		
	2.3.2	BCD	1.NØ✓P.A.R.T.I.A.L.S.	PARTIALS OPTION: DO NOT PRINT PARTIALS AND EXTRA PARTIALS
	2.3.2	BCD	1.P.A.R.T.I.A.L.S.	PRINT PARTIALS AND EXTRA PARTIALS
	2.3.3	BCD	1.N.Ø.✓.Ø.B.Ø.	IXI OPTION (DBH07 ONLY): DO NOT DO ONE BY ONE SEARCH
	2.3.3	BCD	1.Ø.B.Ø.✓.✓.✓.	DO ONE BY ONE SEARCH
	2.3.6	BCD	1.F.Ø.R.✓.D.B.H.	SET-UP INPUT FOR DBH07
	2.3.6	BCD	1.N.Ø.R.M.A.L.	NO SET-UP
	2.3.8	BCD	1.N.Ø.✓.P.L.Ø.T.	PLOT OPTION: DO NOT PLOT
	2.3.8	BCD	1.P.L.Ø.T.✓.✓.	PLOT INFORMATION FOR FOLLOWING STATIONS {0 ⇒ SUPPRESS, 1 ⇒ PLOT STATION: (1 ... 15)}

	JETHTS	JETGLD 2	JETGLD 3	MOONEA	JOGJET	JETGLD 30	JETGLD 85	JPL TRACKER	ASCENSION	F12, 16	ANTIGUA	R9.1	GBT	R.N.L.	PUERTO RICO	R.S.	SAN SOL.	VANDOE	AMR	MERRITT	JODRELL	GRNK.	BOCHUM	PALOMAR	SPINIT	OGLAN PASS	DSS14			
2.50 ØCT																1												0	0	0

	2.3.7	BCD	1.NØ✓S.A.V.E.	CONTROL OPTION: DO NOT SAVE CONTROL WORDS
	2.3.7	BCD	1.S.A.V.E.✓.✓.	SAVE CONTROL WORDS
	2.3.9	BCD	1 EVERY N	RECOMPUTE PARTIALS EVERY 3RD ITERATION
	2.3.9	BCD	1 EVERY T	" " " TIME
		TRA	3,4	

J. NICKERSON 9/1/61
REV. 8/2/62

ALL-30-2

C. Space Trajectory Input Description

Since a full description of the quantities necessary for running the Space Trajectory Program is found in Ref. 2, no explanation is given here for those quantities. Some additional options are available to the user for the Space Trajectory Program. These new options are:

1. Public information
2. Bronstein angles
3. Conic print format
4. Motor burn
5. Earth atmospheric drag
6. Sun radiation pressure
7. Radiometer printout

These additional options are explained in Appendix D. Under the explanation of each of the new options the input required is explained. The input forms that follow in Section VIII-D reflect the new options.

D. Space Trajectory Input Forms

These forms are self explanatory by reference to the explanation column. Careful note should be made to use the correct value in location 140 to properly control the phasing of a case.

JET-PROPULSION-LABORATORY
4800 OAK GROVE AVENUE
PASADENA, CALIFORNIA

PAGE 1

SPACE TRAJECTORIES DBH 07

NAME _____

DATE _____ EXT. _____

CH. NO. _____

LOC 6	OP 7 8 10 11	MISSION NAME 12	LAUNCH DATE 19	LAUNCH AZIMUTH 27	REFERENCE PLANE FOR B·T AND B·R 33
1.00	BCD	✓	/ /		

B·T 45 ±0.5E±2.0	B·R 56 ±0.5E±2.0	RUN FOR 67	RUN BY 70
• E	• E		

LOC	OP	INJECTION CONDITIONS	EXPLANATION
1.1.0	BCD	2.	TARGET USE: EARTH✓ MOON✓✓
			INJECTION CENTRAL BODY: SUN✓✓✓ VENUS✓ MARS✓✓ JUPITE
			INJECTION INPUT TYPE FL.PT.
1.1.3	ØCT		±0 ⇒ INERTIAL CARTESIAN; +3 ⇒ SELENOGRAPHIC
			±1 ⇒ INERTIAL SPHERICAL; +4 ⇒ ENERGY-ASYMPTOTE
			+2 ⇒ EARTH-FIXED SPHERICAL; + ⇒ EQUATORIAL; − ⇒ ECLIPTIC
1.3.6	DEC		COEFFICIENT FOR RADIATION PRESSURE OF SPACECRAFT
1.3.9	BCD	1.	INPUT EQUINOX: ✓✓✓✓✓✓ ⇒ PRESENT DATE; 1950.0 ⇒ 1950 EQUINOX
1.1.4	DEC	Y Y M M O D D H H , N N S S F F F	INJECTION TIME *
1.3.8	DEC		T EXTRA: SECONDS PAST INJECTION TIME
			FOR LOC. 113 = ±0 / ±1, +2, +3 / +4
1.1.6	DEC		X KM OR R KM OR Σ_L DEG
1.1.7	DEC		Y KM; Φ DEG; R KM
1.1.8	DEC		Z KM; Ⓗ DEG; Γ DEG
1.1.9	DEC		$\dot{X}$ KM/SEC; V KM/SEC; C_3 KM/SEC
1.2.0	DEC		$\dot{Y}$ KM/SEC; Γ DEG; Φ_S DEG
1.2.1	DEC		$\dot{Z}$ KM/SEC; Σ DEG; Ⓗ$_S$ DEG
			READ PHASE CARDS: FL.PT.
1.1.2	ØCT		1 ⇒ ONCE FOR REPEATED USE; 0 ⇒ FOR EACH SEPARATE CASE
			−1 ⇒ THAT ARE STORED IN PROGRAM; −0 ⇒ THAT ARE STORED IN PROGRAM AND MODIFY WITH INPUT
	TRA	3, 4	
			* FORM: YYMMODDHH, NNSSFFF
			WHERE: YY = YEAR; NN = MINUTES; NH = MONTH; SS = SECONDS; DD = DAY; FFF = MILLISECS.; HH = HOURS
			ALL TIME *'D WILL BE OF THIS FORM

J. NICKERSON 9/1/61
REV 7-25-62

DBH-07-1

JET-PROPULSION-LABORATORY
4800 OAK GROVE AVENUE
PASADENA, CALIFORNIA

PAGE

PHASE:

LOC.	OP		EXPLANATION
1.4.0	ØCT		Ø: − ⇒ PRINT AT START OF Ø (FX. PT.) RESET T_{PRT} TO $T_{ØSTART}$ & USE T_{PRT} FROM LAST Ø ⇐ ±4 ±0 ⇒ PRINT AT END, LAST Ø ±1 ⇒ PRINT AT END, NOT LAST Ø ⇐ ±5 ±2 ⇒ DON'T PRINT AT END, LAST Ø ⇐ ±6 ±3 ⇒ DON'T PRINT AT END, NOT LAST Ø ⇐ ±7
. . .	. . .		
. . .	. . .		
		R END TEST	
1.4.1	BCD	1. 1	NTH BODY (R MEASURED FROM)
1.4.2	DEC		VAL. OF R (FROM NTH BODY) — EFFECTIVE WHEN: VALUE OF R_{NTH} SPECIFIED IS REACHED
		R DOT TEST	
1.4.3	BCD	1. 1	NTH BODY (R DOT MEASURED FROM)
1.4.4	DEC		VAL. OF R (FROM CENTRAL BODY) — EFFECTIVE WHEN: + ⇒ GREATER THAN R_c; − ⇒ LESS THAN R_c; 0 ⇒ SUPPRESS
		INTEGRATION	
1.4.5	DEC		MODE: 0 ⇒ COWELL, 1 ⇒ ENCKE (FX. PT.)
1.4.6	BCD	1. 1	CENTRAL BODY FOR INTEGRATION
1.5.0	BCD	1. 1	BODY FROM WHICH TO COMPUTE STEP SIZE (EVEN WITH A-M SPECIFIED)
1.4.7	DEC	. . . . . 1	ADAMS-MOULTON (A-M) STEP SIZE (IF 0,0 AND DOUBLES = 0 THEN STEP SIZE IS SELECTED AUTOMATICALLY) ✱
		O D D H H N N S S F F F	
1.4.9	ØCT		NO. OF DOUBLES (IF DOUBLES ≠ 0 A-M STEP SIZE MUST ≠ 0) (FX. PT.)
1.7.2	ØCT		NO. OF INTEGRATION STEP SIZES TO BE TAKEN BETWEEN OUTPUT RECORDS FOR THE
		OUTPUT - PRINT	
1.7.9	BCD	1. 1	OUTPUT EQUINOX: ////// ⇒ PRESENT; DATE 1950.0 ⇒ 1950 EQUINOX
1.5.1	DEC	. . . . . 1	PRINT END 1 ✱
1.5.3	DEC	. . . . . 1	PRINT INTERVAL 1 ✱
1.5.5	DEC	. . . . . 1	PRINT END 2 ✱
1.5.7	DEC	. . . . . 1	PRINT INTERVAL 2 ✱
		Y Y M M O D D H H N N S S F F F	
1.5.9	DEC	. . . . . 1	PRINT END 3 ✱
1.6.1	DEC	. . . . . 1	PRINT INTERVAL 3 ✱
1.6.3	DEC	. . . . . 1	ODD TIME PRINT 1 ✱
1.6.5	DEC	. . . . . 1	ODD TIME PRINT 2 ✱
		GROUP OPTIONS	
1.6.7	ØCT	GEOCENTRIC (NP, CP) / HELIOCENTRIC (NP, CP) / SCRAFT / TARGET CENTERED (NP, CP) / R = 0 / BRIGHT POINT / RMAE PDTIE OR: 0	NP ⇒ NORMAL PRINT; CP ⇒ CONIC PRINT (FX. PT.) 0 ⇒ SUPPRESS; 1 ⇒ EQUATORIAL; 2 ⇒ ECLIPTIC 4 ⇒ ECL. / 5 ⇒ EQU. (AT START ONLY) 6 ⇒ ECL. / 7 ⇒ EQU. (AT END ONLY)
1.7.8	ØCT	GEOCENTRIC (EQU, ECL, ØRB, TLE) / HELIOCENTRIC (EQU, ECL, ØRB, TLE) / TARGET CENTRIC (EQU, ECL, ØRB, TLE)	0 ⇒ NO PRINT; 1 ⇒ PRINT GROUP B; 2 ⇒ GROUP C; 3 ⇒ GROUP D
		STATION OPTIONS: JETNTS, JETGOLD 2, JETGOLD 3, MOONERA, JODJET, JETGOLD 30, JETGOLD 85, JPL TRACKER, ASCENSION, R.T. 16, ANTIGUA, RAI.1, GBI, RAN. 2, PUERTO RICO RAI, SAN SALVADORE, AMR (NORTH AND), JODRELL BANK	
1.6.8	ØCT	. . . . . 1	0 0 0 0 0 0 0 0 0 0
		VIEW PERIODS - MAXIMUM OF 5 STATIONS	
1.7.0	ØCT	. . . . . 1	0 0 0 0 0 0 0 0 0 0
	TRA	3, 4	0 ⇒ SUPPRESS; 1 ⇒ PRINT STATION & INFORMATION ON VIEW PERIOD (1 ≤ ≤ 15)

J. NICKERSON 9/1/61
REV. 4/17/68

DBH-07-2

JET PROPULSION LABORATORY

DBH-07

PHASE INDEPENDENT MOTOR OPTION

SPECIAL STUDY INPUT FORM FOR ONE BURN ONLY

PAGE _____

NAME _____

DATE _____ EXT. _____

CH. NO. _____

LOC 1–6	7	OP 8–10	11	12	
B.R.N.C.N.T	D	+.000	0	1	No. OF BURNS
B.R.N.T.M.S	D	+.000	0	YYMMODDHH 3 MMSSFFF	TIME TO START BURN
B.R.N.D.T.M	D	+.000	0		LENGTH OF BURN SEC.
B.R.N.C.3.S	D	+.000	0		VALUE OF C3 TO END BURN
B.R.N.M.U.S	D	+.000	0		BIAS ANGLE DEG.
1.24		DEC			ACC1 (THRUST IN LB. FORCE)
1.25		DEC			MASS1 (WEIGHT IN LBS)
1.26		DEC			MASS.1 (WEIGHT FLOW RATE IN LB/SEC)

DBH-7-31

JET PROPULSION LABORATORY
4800 OAK GROVE DRIVE
PASADENA, CALIF.

DBH 07

FUNDAMENTAL CONSTANTS OF THE
SOLAR SYSTEM - SYMBOLIC INPUT

Loc (1–6)	7	OP (8–10)	11	12	Nominal Values: June 15, 1963	Explanation	
GRAV	D				3.986032E5	KM^3/SEC^2	$\mu_{\bullet}$
GRAV	D		1		4.900759E3		$\mu_{♀}$
GRAV	D		2		1.32715445E11		$\mu_{\odot}$
GRAV	D		3		3.247695E5		$\mu_{♀}$
GRAV	D		4		4.297780E4		$\mu_{♂}$
GRAV	D		5		3.791870E7		$\mu_{♃}$
GRAV	D		6		1.267106E8		$\mu_{♄}$
Loc (1–6)	7	OP (8–10)	11	12			
LUNGRV	D				.6671E-19	KM^3/SEC^2-KG	G
LUNGRV	D		1		.88746E29	$KG-KM^2$	A
LUNGRV	D		2		.88764E29		B
LUNGRV	D		3		.88801E29		C
Loc (1–6)	7	OP (8–10)	11	12			
HARMN	D		2		1.62345E-3		J
HARMN	D		3		-.575E-5		H
HARMN	D		4		.7875E-5		D
HARMN	D		5		6378.165	KM	R_E
Loc (1–6)	7	OP (8–10)	11	12			
SCALE1	D				6378.3149	KM/E.R.	E.R.
SCALE1	D		1		.149599E9	KM/A.U.	A.U.
Loc (1–6)	7	OP (8–10)	11	12			
GRAV	D	-	2		35.	sec	ΔT = E.T. - U.T.

E. BERGSCHNEIDER 5/31/63 DBH-07-C

JET PROPULSION LABORATORY

FLATPLATE AND SPHERICAL ATMOSPHERE DRAG MODELS

LOC 1–6	7	OP 8–10	11	12	PARAMETER	NOMINAL VALUE
DRAG	D				A	0
PRMASS	D				m	0
CDCØN	D				$K1$	-6.87×10^{7}
ALPDRG	D				α	0
DRAG	D	-00	7		a_6 POLYNOMIAL	-.18484971 E-13
		-00	6		a_5 FOR $\ln \rho$	.22268473 E-10
		-00	5		a_4 FOR	-.73376560 E-8
		-00	4		a_3 $100 \leq$ HIGHT	-.10759789 E-5
		-00	3		a_2 < 135	.11722739 E-2
		-00	2		a_1	-.27174679
		-00	1		a_0 = CONSTANT TERM	.11026027
DRAG	D	-01	7		b_6 POLYNOMIAL	-.62506036 E-11
		-01	6		b_5 FOR $\ln \rho$	.90570804 E-9
		-01	5		b_4 FOR	.17312373 E-6
		-01	4		b_3 $135 \leq$ HIGHT	-.10814594 E-4
		-01	3		b_2 < 440	-.48351957 E-2
		-01	2		b_1	.31037092
		-01	1		b_0 = CONSTANT TERM	-.67268990 E 1
H((0))	D	-01	5		C_5 POLYNOMIAL	-.38545982 E-11
		-01	4		C_4 FOR	.10690795 E-8
		-01	3		C_3 Me	.16206051 E-5
		-01	2		C_2	-.10661253 E-2
		-01	1		C_1	.17572864
		-01	0		C_0 = CONSTANT TERM	.20122668

E. BERGSCHNEIDER

JEB-6

JET PROPULSION LABORATORY

BRONSTEIN ANGLES PAGE _____

LOC 3 6	7	OP 8 10	11	12		
260		BCD		2		REFERENCE BODY
261		DEC			Fx	No. OF n^{TH} BODIES
262		BCD		1		
263		BCD		1		
264		BCD		1		> NAMES OF THE n^{TH} BODIES
265		BCD		1		$n \leq 5$
266		BCD		1		
						POSSIBLE BODIES
						EARTH
						MØØN
						SUN
						VENUS
						MARS
						JUPITER
						CANØPUS
						BARYCENTER

ALSO PUT A 1 IN THE 9TH FLAG FROM THE LEFT IN WORD 167

JEB-4
030262

JET PROPULSION LABORATORY

PUBLIC INFORMATION

LOC 1–6	7	OP 8–10	11	12	PARAMETERS	NOMINAL VALUE
279		DEC			ALPHA	0
280		DEC			SCALE 1	10000
281		DEC			SCALE 2	2500
282		DEC			UE	0
283		DEC			VE	0

ALSO PUT A 1 IN THE 10TH FLAG FROM THE LEFT IN WORD 167

RADIATION PRESSURE

LOC 1–6	7	OP 8–10	11	12	PARAMETER	
136		DEC			FLAG	0 = NO RADIATION PRESSURE NON ZERO = " "
267		DEC			SC	
268		DEC			GB1	
269		DEC			GB2	
270		DEC			A	
271		DEC			GB	
272		DEC			m	

JEB-6

E. Powered Flight Input Description

Page one

1. Description
   a. Ten BCD words are reserved for remarks. The first two words are for the identification number; the third for the date submitted; the fourth for the date the job runs; the fifth for the mission; and the remainder is given to describe the trajectory except for the last two letters, which should be the initials of the engineer.
2. Initial Conditions
   a. The identity number is of the form XXXX.XXX and is used only as a reference.
   b. The date the job is submitted is of the form XX.XX, month.day.
   c. The initial motor is of the form X. and refers to the first motor to be used.
3. Launch Site Conditions
   a. t_0, the initial time, is the time at which position and velocity components are provided for the beginning of the trajectory. The form is XXX.XXXXX.
   b. σ_L, the launch azimuth of the trajectory, is measured from due north. The form is XXX.X.
4. Pad
   a. h_0, the initial height, is the altitude of the launch pad above the reference ellipsoid.
   b. ϕ_0, the geodetic latitude of the launch pad
   c. θ_0, the longitude of the launch pad
5. Launch Date[3]
   a. The month, in the form XX, of launch
   b. The date, in the form XX, of launch
   c. The year, which must be written 19XX, of launch
   d. t_L, time in seconds measured from midnight GMT

[3] This date may not be earlier than January 1, 1960, because of ephemeris limitations.

6. Optional Start Conditions
   a. Velocity value given when initiating a trajectory without defining position and velocity components on page 11. Sense switches 4 and 5 = 0.
   b. An initial constant pitch angle for use with the above velocity
7. Sense Switches
   a. For position and velocity components given in Earth-fixed polar coordinates (R, V, ϕ, θ, γ, σ), insert a 1. (SSW No. 4)
   b. For position and velocity components given in plumb-line Cartesian coordinates (x_p, y_p, z_p, $\dot{x}_p$, $\dot{y}_p$, $\dot{z}_p$), insert a 1. (SSW No. 5)
   c. For input in meters and degrees, insert a 1. (SSW No. 6) A zero implies input in feet and radians.

Pages two and three

1. Motor data
   a. F_0, vacuum thrust, lb
      (1) A constant value
      (2) Option: If a sixth-degree polynomial is desired for thrust rather than a constant, space has been provided so that two motors may have either the same or two separate polynomials. By inserting a -1 the first thrust polynomial table will be used. A -2 will cause the second polynomial table to be used.
   b. F_e, exhaust area of throat, sq ft
      (1) This value is meaningless when the missile has an altitude of 300,000 ft or more since atmospheric terms are dropped above that altitude.
   c. W_g, gross weight, lb
      (1) A constant value
      (2) When it is desired to compute the gross weight from the previous motor, a value of zero is inserted.
   d. W_e, discardable weight, lb

e. W_p, fuel flow rate, lb/sec

(1) A constant value

(2) If a sixth-degree polynomial is desired for the flow rate rather than a constant, space has been provided so that two motors may have either the same or two separate polynomials. By inserting a -1 the first thrust polynomial table will be used. A -2 will cause the second polynomial table to be used.

f. W_f, fuel weight shutoff, lb

(1) A fuel weight shutoff is executed when W_f is equal to the desired weight of fuel to be burned.

(2) When the option is not desired W_f should be equal to or greater than the gross weight, W_g.

g. D, diameter of the missile, ft

(1) This value is used only in the computation of drag. When the missile has an altitude of 300,000 ft or more, this value is not used.

h. C_{di}, drag coefficient

(1) A constant value

(2) When a polynomial is desired the value zero will indicate that the drag table is to be used.

2. Motor-burning and coasting periods and guidance modes. The user is to indicate the desired values for the items with a subscript of one. The programmer will translate the values necessary and place them in the subscript two position.

a. Δt_b, the value of the burning period or the abbreviation for the shutoff option desired, sec

b. GDB, the symbol for the desired guidance mode. For translation to a lambda box control number, see List No. 1 at the end of this Section.

c. Δt_c, the value of the coasting period, sec

d. GDC, the symbol for the guidance mode, type of search desired, or termination of trajectory (lambda box 12 or 13). For translation to a lambda box control number, see List No. 1 at the end of this Section.

Page four

1. Thrust polynomial table, lb
   a. This table is furnished by the user.
2. Fuel-flow polynomial table, lb/sec
   a. This table is furnished by the user.
3. Drag coefficient selection table
   a. If this table is desired the words "as punched" should be written across the input area. A set of polynomials for a basic missile configuration will then be inserted by the key-punch operator.

Page five

The guidance modes described in this Section are subscripted so as to correspond to the order in which they are desired, $\alpha_p(t)$, α_p, and $\alpha_y(t)$ excepted.

1. χ, constant chi
   a. A constant value that chi (CHI) assumes.
   b. "CONSTANT CHI = a" is printed preceding the motor heading.
2. $\Delta\chi$, delta chi
   a. A constant which changes the value of chi (CHI) at any time, t.
   b. "PITCH UP = +a" or "PITCH DOWN = -a" is printed preceding the motor heading.
3. α_p, constant angle of attack in the pitch plane
   a. A constant which indirectly causes a change in the total angle of attack (ALA)
   b. "CONSTANT ATTACK ANGLE = a" is printed preceding the motor heading.
4. $\alpha_p(t)$, polynomial for angle of attack in the pitch plane
   a. A sixth-degree polynomial which indirectly changes the value of the total angle of attack (ALA)
   b. "PITCH ATTACK ANGLE POLY = $p_0\ p_1 \ldots p_6$" is printed preceding the motor heading.
5. μ, pitch control from the horizon
   a. A constant which controls the angle between the vehicle thrust axis and the local horizon
   b. "CONTROL FROM HORIZON = a" is printed preceding the motor heading.

6. $\Delta\tau$, delta tau
   a. A constant which changes the value of tau (TAU) at any time, t
   b. "YAW RIGHT = +a" or "YAW LEFT = -a" is printed preceding the motor heading.
7. $\alpha_y(t)$, polynomial for angle of attack in the yaw plane
   a. A sixth-degree polynomial which indirectly changes the value of the total angle of attack (ALA)
   b. "YAW ATTACK ANGLE POLY = $y_0\ y_1 \cdots y_6$" is printed preceding the motor heading.

Page six

1. $\chi_p(t)$, pitch polynomial
   a. Each polynomial block is numbered corresponding to a specific motor and will only affect that particular motor.
   b. A sixth-degree polynomial which directly changes the value of chi (CHI)
   c. "CHI POLY COEFF = $c_0\ c_1 \cdots c_6$" is printed preceding the motor heading.

Page seven

1. $\tau_y(t)$, yaw polynomials
   a. Each polynomial block is numbered corresponding to a specific motor and will only affect that particular motor.
   b. A sixth-degree polynomial which directly changes the value of tau (TAU)
   c. "TAU POLY COEFF = $V_0\ V_1 \cdots V_6$" is printed preceding the motor heading.

Page eight

1. V_x is the measurable velocity obtained from integrating an equation. It contains the acceleration on the missile axis a_x. Also added in are the initial velocity along the missile axis and two terms to take into account accelerometer drifts. For further information on this option, see Ref. 4, p. 22.

2. Specific variable shutoff
   a. The locations for the shutoff variables can be found in List No. 2 at the end of this Section. These may be used by one or more motors per trajectory but only for the indicated motor.
   b. The values for the shutoff variables will be supplied by the user. The value is applicable only to the motor indicated. Units for this value must be meters, degrees or pounds.
   c. Desired results from shutoff option
      (1) If a shutoff as well as a search in the powered flight trajectory is desired, insert a -1.
      (2) If no shutoff is desired, insert a 0.
      (3) If a shutoff is desired, insert a +1.

Page nine

1. Specific variable interruption
   a. Location of the control variable which is to determine the interruption (see List No. 3 at the end of this Section).
   b. Value of variable at which the interruption is desired. Units for this value must be meters, degrees or pounds.
   c. Number of desired lambda box (see List No. 1 at the end of this Section).
2. Pseudo S option. All values are provided by the user.
   a. Θ_0, nominal right ascension
   b. Φ_0, nominal declination
   c. A, B, D, E, parameters for the correcting equations
   d. T_{is}, nominal time of injection
3. Earth potential function
   All values are provided by the user.
   a. GM_E, universal gravitational constant
   b. R_E, Earth equatorial radius
   c. D, H, J, parameters in the potential equations

Page ten

1. Time stops, for programmer only
   a. To keep the program from "running away" in the event of an error, insert a time which is greater than the total of the initial time t_0, plus all burning and coasting times t_b and t_c. Couple this time with lambda box control No. 13. If no special printout is desired, this need be the only time stop.
   b. If stations, conics, or other optional prints are desired, the time at which they are to start is coupled with the corresponding lambda control number.
   c. Time stops must be listed chronologically, from t_0.

Page eleven

1. Earth-fixed polar coordinates
   a. Single value table
      (1) σ_{Ls}, the launch azimuth of the trajectory which is measured from due north
      (2) σ_{Lf}, set to 0 in program
      (3) $\Delta\sigma$, set to 0 in program
      (4) R, distance from the center of the Earth to the probe
      (5) ϕ, geocentric latitude of probe
      (6) V, velocity of probe
      (7) γ, path pitch angle of probe
      (8) σ, path azimuth angle of probe
      (9) θ, longitude of probe
   b. Multiple value table. Should coordinates be required for an azimuth other than those available, a table may be formed and the machine will interpolate for the desired azimuth. Space has been provided for as many as twenty sets of coordinates. This table is to be listed in single columns on columnar paper. Start two columns from the left (see Section VII-Job 3 Loading Description).
      (1) σ_{Ls}, the smallest launch azimuth value
      (2) σ_{Lf}, the largest launch azimuth value
      (3) $\Delta\sigma$, the decrement between azimuths, which must be a constant

(4) R, start with the radius value corresponding to the smallest azimuth, σ_{Ls}, and list as the azimuth value increases.

(5) ϕ, latitude; list as in (4).

(6) V, velocity; list as in (4).

(7) γ, pitch angle; list as in (4).

(8) σ, path azimuth angle; list as in (4).

(9) θ, longitude; list as in (4).

(10) t, time for which the coordinates are listed. Starting in location 623, list as in (4).

c. Cartesian coordinates for the plumb-line system. Space has been provided for six sets of coordinates so that a basic case may be perturbed or a number of cases, for the same azimuth and day, may be run with the least amount of input necessary.

d. A TRA 3, 4 card indicates the end of data for a given case. Multiple cases may be run as long as a TRA 3, 4 card followed by a TRA 4, 4 card is inserted following each case.

e. Control is transferred back to the monitor by a TRA 180 card being placed behind the last TRA 4, 4 card.

For additional information about the input required for the Powered Flight Program, see Ref. 4.

```
LIST NO. 1   LAMBDA BOXES            EGO 18 UNDER MONITOR

LAMBDA 1     SET DELTA T = 1 SEC.                                    EGO 18
LAMBDA 2     SET DELTA T = 2 SEC.                                    EGO 18
LAMBDA 3     SET DELTA T = 10 SEC.                                   EGO 18
LAMBDA 4     SET DELTA T = 50 SEC.                                   EGO 18
LAMBDA 5     SET PRINT INTERVAL = 0.5 SEC.                           EGO 18
LAMBDA 6     SET PRINT INTERVAL = 1.0 SEC.                           EGO 18
LAMBDA 7     SET PRINT INTERVAL = 2.0 SEC.                           EGO 18
LAMBDA 8     SET PRINT INTERVAL = 10.0 SEC.                          EGO 18
LAMBDA 9     SET PRINT INTERVAL = 100.0 SEC.                         EGO 18
LAMBDA 10    NO REGULAR PRINT OUT                                    EGO 18
LAMBDA 11    UNCONDITIONAL PRINT OUT                                 EGO 18
LAMBDA 12    PRINT OUT AND RETURN TO FAP SYSTEM                      EGO 18
LAMBDA 13    PRINT OUT, RESET, RESTART                               EGO 18
LAMBDA 14    ALPHA SUB P, CONSTANT ATTACK ANGLE                      EGO 18
LAMBDA 15    ALPHA SUB P (T), PITCH ATTACK ANGLE POLYNOMIAL          EGO 18
LAMBDA 16    ZERO LIFT                                               EGO 18
LAMBDA 17    GRAVITY TURN                                            EGO 18
LAMBDA 18    VERTICAL FLIGHT                                         EGO 18
LAMBDA 19    CHI BAR, CONSTANT CHI                                   EGO 18
LAMBDA 20    CHI, CHI POLYNOMIAL COEFFICIENTS                        EGO 18
LAMBDA 21    DELTA CHI, PITCH UP OR DOWN                             EGO 18
LAMBDA 22    TAU = 0                                                 EGO 18
LAMBDA 23    SIN TAU = VEL 3                                         EGO 18
LAMBDA 24    TAU, TAU POLYNOMIAL COEFFICIENTS                        EGO 18
LAMBDA 25    DELTA TAU, YAW RIGHT OR LEFT                            EGO 18
LAMBDA 26    ALPHA SUB Y (T), YAW ATTACK ANGLE POLYNOMIAL            EGO 18
LAMBDA 27    FORM A + BT = ATTACK ANGLE                              EGO 18
LAMBDA 28    SET NEXT STAGE                                          EGO 18
LAMBDA 29    SET COAST                                               EGO 18
LAMBDA 30    TRANSFER TO N-BODY                                      EGO 18
LAMBDA 31    AVAILABLE                                               EGO 18
LAMBDA 32    AVAILABLE                                               EGO 18
LAMBDA 33    PRINT CONIC                                             EGO 18
LAMBDA 34    PRINT CONIC WITH PRINT                                  EGO 18
LAMBDA 35    START STATION PRINT                                     EGO 18
LAMBDA 36    STOP STATION PRINTS                                     EGO 18
LAMBDA 37    END SEARCH IN POWERED FLIGHT                            EGO 18
LAMBDA 38    MU, REFERENCE C VECTOR TO R VECTOR                      EGO 18
LAMBDA 39    RETURN TO FAP SYSTEM                                    EGO 18
LAMBDA 40    AVAILABLE                                               EGO 18
LAMBDA 41    SPECIAL PRINT INTERVAL IN LOC 416                       EGO 18
LAMBDA 42    AVAILABLE                                               EGO 18
```

LIST NO. 2 SPECIFIC VARIABLE SHUTOFF EGO 18 UNDER MONITOR

LOC	SYM	EXPLANATION
75661	VR,	EARTH FIXED VELOCITY (METERS PER SECOND)
76140	ENERGY,	TWICE THE ENERGY PER UNIT MASS (METERS SQ. PER SEC. SQ.)
75760	SPEED,	INERTIAL VELOCITY (METERS PER SECOND)

LIST NO. 3 VARIABLE INTERRUPT OPTION EGO-18 UNDER MONITOR

LOC	SYM	EXPLANATION
75644	HITE	ALTITUDE OF PROBE ABOVE EARTH (METERS)
75654	DRAG,	DRAG VALUE (POUNDS)
75751	ALPHA,	TOTAL ANGLE OF ATTACK (DEGREES)
75754	RADIS,	DISTANCE FROM PROBE TO CENTER OF EARTH (METERS)
75761	GAMMA,	INERTIAL PATH ANGLE (DEGREES)
75764	SIGMA,	EARTH FIXED PATH AZIMUTH ANGLE (DEGREES)
75776	PHI,	ANGLE BETWEEN EARTH CENTER-ORIGIN AND PROBE (DEGREES)
76006	THETA,	EARTH FIXED PATH ANGLE (DEGREES)
76011	CHI,	INERTIAL VEHICLE PITCH ANGLE (DEGREES)
76014	TAU,	INERTIAL VEHICLE YAW ANGLE (DEGREES)
76102	SIGMA,	INERTIAL PATH AZIMUTH ANGLE (DEGREES)
76141	MMNTM,	MOMENTUM (METERS SQ. PER SECOND)
76474	NEWDC,	VEHICLE DECLINATION (DEGREES)
76475	NEWRA,	VEHICLE RIGHT ASCENSION (DEGREES)
75645	MACH,	MACH NUMBER (DIMENSIONLESS)

F. Powered Flight Input Forms

The following input forms can be used as a check list, and can be key-punched from directly. The bold letters are keyed to the descriptions given in the preceding Section E.

JET-PROPULSION-LABORATORY
4800 OAK GROVE AVENUE
PASADENA, CALIFORNIA

PAGE ONE

POWERED FLIGHT TRAJECTORIES EG018

NAME
DATE EXT.
CH. NO.

LOC 6	7	OP 8–10	11	12 IDENTIFICATION	DATE SUBMITTED	DATE RUN	MISSION
1.0.0		B.C.D		✓ a.			
				DESCRIPTION - LAST TWO LETTERS = ENGINEER'S INITIALS			

INITIAL CONDITIONS:					EXPLANATION	
3.5.0		D.E.C		a		ID. NO.
3.5.1		D.E.C		b		DATE
3.5.2		D.E.C		c		INITIAL MOTOR $n = 1, 2, \ldots, 6$
LAUNCH SITE CONDITIONS:						
LOC 6	7	OP 8–10	11	12		
3.5.4		D.E.C		a		INITIAL TIME
3.5.8		D.E.C		b		LAUNCH AZIMUTH
PAD =						
3.5.5		D.E.C		a		INITIAL HEIGHT
3.5.6		D.E.C		b		GEODETIC LATITUDE
3.5.7		D.E.C		c		LONGITUDE
3.9.0		D.E.C		a	FX. PT.	MONTH
3.9.1		D.E.C		b	FX. PT.	DAY
3.9.2		D.E.C		c	FX. PT.	YEAR
3.9.3		D.E.C		d		TIME FROM MIDNIGHT
OPTIONAL START CONDITIONS:						
3.6.0		D.E.C		a		VELOCITY AT t_0
3.6.1		D.E.C		b		PITCH ANGLE γ_0
SENSE SWITCHES						
LOC 6	7	OP 8–10	11	12		
4.1.3		D.E.C		a	SW 4	0 ⇒ NOT POLAR COORD. 1 ⇒ POLAR COORD.
4.1.4		D.E.C		b	SW 5	0 ⇒ NOT CART. COORD. 1 ⇒ CART. COORD.
4.1.5		D.E.C		c	SW 6	0 ⇒ FT. & RAD. 1 ⇒ M. & DEG.

J. NICKERSON

EGO-18-2

JET-PROPULSION-LABORATORY
4800 OAK GROVE AVENUE
PASADENA, CALIFORNIA

PAGE TWO

MOTOR DATA:						CONFIG.=					
MOTOR 1						MOTOR 2					
LOC 6	7	OP 8 10	11	12	73	LOC 6	7	OP 8 10	11	12	73	
.9.0.1		D.E.C		a		.9.1.3		D.E.C				F_o
.9.0.2		D.E.C		b		.9.1.4		D.E.C				F_e
.9.0.3		D.E.C		c		.9.1.5		D.E.C				W_g
.9.0.4		D.E.C		d	M1	.9.1.6		D.E.C			M2	W_e
. . .		. .				. . .		. .				
.9.0.5		D.E.C		e		.9.1.7		D.E.C				$\dot{W}_p$
.9.0.6		D.E.C		f		.9.1.8		D.E.C				W_f
.9.0.7		D.E.C		g		.9.1.9		D.E.C				D
.9.0.8		D.E.C		h	M1	.9.2.0		D.E.C			M2	C_{d_i}
Δt_b= a_1					b_1	Δt_b=						**
Δt_c= c_1					d_1	Δt_c=						**
.9.0.9		D.E.C		a_2		.9.2.1		D.E.C				Δt_b
.9.1.0		D.E.C		b_2		.9.2.2		D.E.C				GDB
.9.1.1		D.E.C		c_2		.9.2.3		D.E.C				Δt_c
.9.1.2		D.E.C		d_2	M1	.9.2.4		D.E.C			M2	GDC
. . .		. .				. . .		. .				
. . .		. .				. . .		. .				

EXPLANATION OF MOTOR DATA INPUT:

F_o: ±NO. ⇒ VACUUM THRUST CONSTANT Lbs.
FX.PT. n = -1, -2 ⇒ POLYN. $F_o(t)$ USED

F_e: EXHAUST AREA OF THROAT ft^2

W_g: ≠0 ⇒ GROSS WEIGHT Lbs.
=0 ⇒ W_g COMPUTED FR. PREVIOUS STAGE

W_e: WEIGHT DISCARDED Lbs.

$\dot{W}_p$: ±NO. ⇒ WEIGHT FLOW CONSTANT RATE Lbs/sec
FX.PT. n = -1, -2 ⇒ POLYN. $\dot{W}_p(t)$ USED

W_f: FUEL WEIGHT SHUTOFF. USE W_g WHEN OPTION NOT DESIRED Lbs.

D.: EFFECTIVE DIAMETER OF VEHICLE ft.

C_{d_i}: ≠0 ⇒ DRAG COEFF. = $C_{d_i}/\pi/4$
=0 ⇒ C_{d_o} COMPUTED BY A SET C(M) POLYNS. M = MACH NO.

** STATE BURNING/COAST TIME (SECS) AND GUIDANCE MODE DESIRED DURING THIS TIME.

FOR PROGRAMMER:

Δt_b: ≥0 ⇒ BURNING PERIOD SECS.
<0 ⇒ BURNING PERIOD DETERMINED BY SHUTOFF EQUATION
=-0 ⇒ FOR UNI-, BIVARIATE SEARCH ONLY. ENDS SEARCH PASS AT SHUTOFF AS $\Delta t_b < 0$.

GDB: GUIDANCE MODE DURING BURNING.
FX.PT. A LAMBDA NO. WHICH MAY BE CHANGED BY TIME STOPS.

Δt_c: ≥0 ⇒ COASTING PERIOD SECS.
<0 ⇒ $|\Delta t_c|$ = COAST PERIOD. AT END OF COAST COMPUTES TRAJ. OF EJECTED VEHICLE
=-0 ⇒ END OF POWERED PORTION OF EXTENDED SEARCH

GDC: SAME AS GDB BUT FOR COAST

J. NICKERSON

EGO-12-3

JET-PROPULSION-LABORATORY
4800 OAK GROVE AVENUE
PASADENA, CALIFORNIA

PAGE THREE

MOTOR DATA: CONT.

CONFIG. =

MOTOR 3

LOC	OP		
.9.2.5	D.E.C		
.9.2.6	D.E.C		
.9.2.7	D.E.C		
.9.2.8	D.E.C	M3	
. . .	. . .		
.9.2.9	D.E.C		
.9.3.0	D.E.C		
.9.3.1	D.E.C		
.9.3.2	D.E.C	M3	
Δt_b=			
Δt_c=			
.9.3.3	D.E.C		
.9.3.4	D.E.C		
.9.3.5	D.E.C		
.9.3.6	D.E.C	M3	
. . .	. . .		
. . .	. . .		

MOTOR 4

LOC	OP			
.9.3.7	D.E.C			F_o
.9.3.8	D.E.C			F_e
.9.3.9	D.E.C			ω_g
.9.4.0	D.E.C	M4		ω_e
. . .	. . .			
.9.4.1	D.E.C			$\dot{\omega}_p$
.9.4.2	D.E.C			ω_f
.9.4.3	D.E.C			D
.9.4.4	D.E.C	M4		C_{d_i}
Δt_b=				**
Δt_c=				**
.9.4.5	D.E.C			Δt_b
.9.4.6	D.E.C			GDB
.9.4.7	D.E.C			Δt_c
.9.4.8	D.E.C	M4		GDC
. . .	. . .			
. . .	. . .			

MOTOR 5

LOC	OP		
.9.4.9	D.E.C		
.9.5.0	D.E.C		
.9.5.1	D.E.C		
.9.5.2	D.E.C	M5	
. . .	. . .		
.9.5.3	D.E.C		
.9.5.4	D.E.C		
.9.5.5	D.E.C		
.9.5.6	D.E.C	M5	
Δt_b=			
Δt_c=			
.9.5.7	D.E.C		
.9.5.8	D.E.C		
.9.5.9	D.E.C		
.9.6.0	D.E.C	M5	
. . .	. . .		
. . .	. . .		

MOTOR 6

LOC	OP			
.9.6.1	D.E.C			F_o
.9.6.2	D.E.C			F_e
.9.6.3	D.E.C			ω_g
.9.6.4	D.E.C	M6		ω_e
. . .	. . .			
.9.6.5	D.E.C			$\dot{\omega}_p$
.9.6.6	D.E.C			ω_f
.9.6.7	D.E.C			D
.9.6.8	D.E.C	M6		C_{d_i}
Δt_b=				**
Δt_c=				**
.9.6.9	D.E.C			Δt_b
.9.7.0	D.E.C			GDB
.9.7.1	D.E.C			Δt_c
.9.7.2	D.E.C	M6		GDC
. . .	. . .			
. . .	. . .			

J. NICKERSON

ESO-18-4

JET-PROPULSION-LABORATORY
4800 OAK GROVE AVENUE
PASADENA, CALIFORNIA

PAGE FOUR

MOTOR DATA OPTIONS:

THRUST POLYNOMIAL

$F_0(t) = f_0 + f_1 t + \cdots + f_6 t^6$

F_0 = -1 CODE			F_0 = -2 CODE			
LOC	OP		LOC	OP		
.3.1.0	D.E.C		.3.1.7	D.E.C		f_6
.3.1.1	D.E.C		.3.1.8	D.E.C		f_5
.3.1.2	D.E.C		.3.1.9	D.E.C		f_4
.3.1.3	D.E.C		.3.2.0	D.E.C		f_3
. . .	. . .		. . .	. . .		
.3.1.4	D.E.C		.3.2.1	D.E.C		f_2
.3.1.5	D.E.C		.3.2.2	D.E.C		f_1
.3.1.6	D.E.C		.3.2.3	D.E.C		f_0

WEIGHT FLOW POLYNOMIAL

$\dot{w}_p(t) = w_0 + w_1 t + \cdots + w_6 t^6$

$\dot{w}_p$ = -1 CODE			$\dot{w}_p$ = -2 CODE			
LOC	OP		LOC	OP		
.3.3.0	D.E.C		.3.3.7	D.E.C		w_6
.3.3.1	D.E.C		.3.3.8	D.E.C		w_5
.3.3.2	D.E.C		.3.3.9	D.E.C		w_4
.3.3.3	D.E.C		.3.4.0	D.E.C		w_3
. . .	. . .		. . .	. . .		
.3.3.4	D.E.C		.3.4.1	D.E.C		w_2
.3.3.5	D.E.C		.3.4.2	D.E.C		w_1
.3.3.6	D.E.C		.3.4.3	D.E.C		w_0

DRAG COEFFICIENT SELECTION

$C_{d_i} = 0$

LOC	OP			LOC	OP		
.4.3.5	D.E.C		m_1	.4.4.7	D.E.C		C_3^{II}
.4.3.6	D.E.C		m_2	.4.4.8	D.E.C		C_2
.4.3.7	D.E.C		m_3	.4.4.9	D.E.C		C_1
.4.3.8	D.E.C		m_4	.4.5.0	D.E.C		C_0
. . .	. . .			. . .	. . .		
.4.3.9	D.E.C		C_3^{I}	.4.5.1	D.E.C		C_3^{III}
.4.4.0	D.E.C		C_2	.4.5.2	D.E.C		C_2
.4.4.1	D.E.C		C_1	.4.5.3	D.E.C		C_1
.4.4.2	D.E.C		C_0	.4.5.4	D.E.C		C_0
. . .	. . .			. . .	. . .		
.4.4.3	D.E.C		C_3^{II}	.4.5.5	D.E.C		C_3^{IV}
.4.4.4	D.E.C		C_2	.4.5.6	D.E.C		C_2
.4.4.5	D.E.C		C_1	.4.5.7	D.E.C		C_1
.4.4.6	D.E.C		C_0	.4.5.8	D.E.C		C_0

J. NICKERSON

EGO-12-5

JET-PROPULSION-LABORATORY
4800 OAK GROVE AVENUE
PASADENA, CALIFORNIA

PAGE FIVE

GUIDANCE PARAMETERS:

CONSTANT CHI

$\bar{\chi}_{i=1,\ldots,4}$ LAM 19

LOC	OP		
.3.8.2	D.E.C		$\bar{\chi}_1$
.3.8.3	D.E.C		$\bar{\chi}_2$
.3.8.4	D.E.C		$\bar{\chi}_3$
.3.8.5	D.E.C		$\bar{\chi}_4$
		75 X	

PITCH CONTROL FROM HORIZON

$\mu_{i=1,\ldots,4}$ LAM 38

LOC	OP		
.3.7.0	D.E.C		μ_1
.3.7.1	D.E.C		μ_2
.3.7.2	D.E.C		μ_3
.3.7.3	D.E.C		μ_4
		75 M	

CONSTANT CHANGE IN CHI

$\Delta\chi_{i=1,\ldots,3}$ LAM 21

LOC	OP		
.3.8.6	D.E.C		$\Delta\chi_1$
.3.8.7	D.E.C		$\Delta\chi_2$
.3.8.8	D.E.C		$\Delta\chi_3$
. . .	. .		
		75 DX	

CONSTANT CHANGE IN YAW

$\Delta\tau_{i=1,\ldots,4}$ LAM 25

LOC	OP		
.3.7.8	D.E.C		$\Delta\tau_1$
.3.7.9	D.E.C		$\Delta\tau_2$
.3.8.0	D.E.C		$\Delta\tau_3$
.3.8.1	D.E.C		$\Delta\tau_4$
		75 DT	

ANGLE OF ATTACK IN PITCH

$\alpha_p = p_0$ LAM 14

$\alpha_p(t) = p_0 + p_1 t + \ldots + p_6 t^6$ LAM 15

LOC	OP		
.4.8.5	D.E.C		p_6
.4.8.6	D.E.C		p_5
.4.8.7	D.E.C		p_4
.4.8.8	D.E.C		p_3
. . .	. .		
.4.8.9	D.E.C		p_2
.4.9.0	D.E.C		p_1
.4.9.1	D.E.C		p_0
		75 AP(T)	

ANGLE OF ATTACK IN YAW

$\alpha_y(t) = y_0 + y_1 t + \ldots + y_6 t^6$ LAM 26

LOC	OP		
.4.9.2	D.E.C		y_6
.4.9.3	D.E.C		y_5
.4.9.4	D.E.C		y_4
.4.9.5	D.E.C		y_3
. . .	. .		
.4.9.6	D.E.C		y_2
.4.9.7	D.E.C		y_1
.4.9.8	D.E.C		y_0
		75 AY(T)	

J. NICKERSON

ECO-12-6

JET-PROPULSION-LABORATORY
4800 OAK GROVE AVENUE
PASADENA, CALIFORNIA

PAGE SIX

GUIDANCE PARAMETERS: CONT.

PITCH A FUNCTION OF TIME $\psi(t) = C_0 + C_1(t) + \cdots + C_6 t^6$ LAM 20

MOTOR 1			MOTOR 2			
LOC	OP		LOC	OP		
.7.0.0	D.E.C		.7.0.7	D.E.C		C_6
.7.0.1	D.E.C		.7.0.8	D.E.C		C_5
.7.0.2	D.E.C		.7.0.9	D.E.C		C_4
.7.0.3	D.E.C	H1	.7.1.0	D.E.C	H2	C_3
. . .	. .	76 X(T)	. . .	. .	76 X(T)	
.7.0.4	D.E.C		.7.1.1	D.E.C		C_2
.7.0.5	D.E.C		.7.1.2	D.E.C		C_1
.7.0.6	D.E.C	H1	.7.1.3	D.E.C	H2	C_0
		76 X(T)			76 X(T)	

$\psi(t)$ CONT.

MOTOR 3			MOTOR 4			
LOC	OP		LOC	OP		
.7.1.4	D.E.C		.7.2.1	D.E.C		C_6
.7.1.5	D.E.C		.7.2.2	D.E.C		C_5
.7.1.6	D.E.C		.7.2.3	D.E.C		C_4
.7.1.7	D.E.C	H3	.7.2.4	D.E.C	H4	C_3
. . .	. .	76 X(T)	. . .	. .	76 X(T)	
.7.1.8	D.E.C		.7.2.5	D.E.C		C_2
.7.1.9	D.E.C		.7.2.6	D.E.C		C_1
.7.2.0	D.E.C	H3	.7.2.7	D.E.C	H4	C_0
		76 X(T)			76 X(T)	

$\psi(t)$ CONT.

MOTOR 5			MOTOR 6			
LOC	OP		LOC	OP		
.7.2.8	D.E.C		.7.3.5	D.E.C		C_6
.7.2.9	D.E.C		.7.3.6	D.E.C		C_5
.7.3.0	D.E.C		.7.3.7	D.E.C		C_4
.7.3.1	D.E.C	H5	.7.3.8	D.E.C	H6	C_3
. . .	. .	76 X(T)	. . .	. .	76 X(T)	
.7.3.2	D.E.C		.7.3.9	D.E.C		C_2
.7.3.3	D.E.C		.7.4.0	D.E.C		C_1
.7.3.4	D.E.C	H5	.7.4.1	D.E.C	H6	C_0
		76 X(T)			76 X(T)	

J. NICKERSON

EGO-18-7

JET PROPULSION LABORATORY
4800 OAK GROVE AVENUE
PASADENA, CALIFORNIA

PAGE SEVEN

GUIDANCE PARAMETERS: CONT.

YAW A FUNCTION OF TIME $\tau(t) = v_0 + v_1(t) + \cdots + v_6 t^6$ LAM 2.4

MOTOR 1 T=				MOTOR 2 T=			
LOC	OP			LOC	OP		
.7.5.0	D.E.C			.7.5.7	D.E.C		v_6
.7.5.1	D.E.C			.7.5.8	D.E.C		v_5
.7.5.2	D.E.C			.7.5.9	D.E.C		v_4
.7.5.3	D.E.C		H1	.7.6.0	D.E.C		H2 v_3
. . .	. .	T(T)		. . .	. .	T(T)	
.7.5.4	D.E.C			.7.6.1	D.E.C		v_2
.7.5.5	D.E.C			.7.6.2	D.E.C		v_1
.7.5.6	D.E.C		H1	.7.6.3	D.E.C		H2 v_0
		T(T)				T(T)	

$\tau(t)$ CONT.

MOTOR 3 T=				MOTOR 4 T=			
LOC	OP			LOC	OP		
.7.6.4	D.E.C			.7.7.1	D.E.C		v_6
.7.6.5	D.E.C			.7.7.2	D.E.C		v_5
.7.6.6	D.E.C			.7.7.3	D.E.C		v_4
.7.6.7	D.E.C		H3	.7.7.4	D.E.C		H4 v_3
. . .	. .	T(T)		. . .	. .	T(T)	
.7.6.8	D.E.C			.7.7.5	D.E.C		v_2
.7.6.9	D.E.C			.7.7.6	D.E.C		v_1
.7.7.0	D.E.C		H3	.7.7.7	D.E.C		H4 v_0
		T(T)				T(T)	

$\tau(t)$ CONT.

MOTOR 5 T=				MOTOR 6 T=			
LOC	OP			LOC	OP		
.7.7.8	D.E.C			.7.8.5	D.E.C		v_6
.7.7.9	D.E.C			.7.8.6	D.E.C		v_5
.7.8.0	D.E.C			.7.8.7	D.E.C		v_4
.7.8.1	D.E.C		H5	.7.8.8	D.E.C		H6 v_3
. . .	. .	T(T)		. . .	. .	T(T)	
.7.8.2	D.E.C			.7.8.9	D.E.C		v_2
.7.8.3	D.E.C			.7.9.0	D.E.C		v_1
.7.8.4	D.E.C		H5	.7.9.1	D.E.C		H6 v_0
		T(T)				T(T)	

J. NICKERSON

ECO-18-B

JET PROPULSION LABORATORY
4800 OAK GROVE AVENUE
PASADENA, CALIFORNIA

PAGE EIGHT

SHUTOFF OPTIONS

VELOCITY: FORM $V_x = K_1 \int_{t_0}^{t} a_x\,dt + V_x(t_0) + K_2 + K_3(t-a) + K_4(t-b)^2 \quad V_s = V_{xs} - V_x$

LOC	OP		LOC	OP	
8.5.0	D.E.C		8.5.8	D.E.C	K_1
8.5.1	D.E.C		8.5.9	D.E.C	K_2
8.5.2	D.E.C		8.6.0	D.E.C	K_3
8.5.3	D.E.C		8.6.1	D.E.C	K_4
. . .	. .		. . .	. .	
8.5.4	D.E.C		8.6.2	D.E.C	a
8.5.5	D.E.C		8.6.3	D.E.C	b
8.5.6	D.E.C		8.6.4	D.E.C	$V_x(t_0)$
8.5.7	D.E.C		8.6.5	D.E.C	V_{xs}

SPECIFIC VARIABLE:

LOC	OP				LOCATION OF SHUTOFF VARIABLE FOR:
6.8.1	Ø.C.T	a	LØC		MOTOR 1
6.8.2	Ø.C.T		LØC		MOTOR 2
6.8.3	Ø.C.T		LØC		MOTOR 3
6.8.4	Ø.C.T		LØC		MOTOR 4
6.8.5	Ø.C.T		LØC		MOTOR 5
6.8.6	Ø.C.T		LØC		MOTOR 6
. . .	. .				DESIRED SHUTOFF VALUE FOR VARIABLE OF:
6.9.1	D.E.C	b	VAL		MOTOR 1
6.9.2	D.E.C		VAL		MOTOR 2
6.9.3	D.E.C		VAL		MOTOR 3
6.9.4	D.E.C		VAL		MOTOR 4
6.9.5	D.E.C		VAL		MOTOR 5
6.9.6	D.E.C		VAL		MOTOR 6
. . .	. .				$N_i = 1 \Rightarrow$ SHUTOFF & CONTINUE
. . .	. .				$N_i = -1 \Rightarrow$ SHUTOFF & SEARCH IN EGO
. . .	. .				$N_i = 0 \Rightarrow$ NO SHUTOFF
9.9.1	D.E.C	c	N1		FOR: MOTOR 1
9.9.2	D.E.C		N2		MOTOR 2
9.9.3	D.E.C		N3		MOTOR 3
9.9.4	D.E.C		N4		MOTOR 4
9.9.5	D.E.C		N5		MOTOR 5
9.9.6	D.E.C		N6		MOTOR 6
. . .	. .				

* ⇒ FL. PT. NUMBER

EGO-18-9

JET-PROPULSION-LABORATORY
4800 OAK GROVE AVENUE
PASADENA, CALIFORNIA

PAGE NINE

SHUTOFF OPTIONS (CONT.)

SPECIFIC VARIABLE INTERRUPTION:

LOC (6)	7	OP (8–10)	11	12	EXPLANATION	
.6.9.7		ØCT		a	LØC	LOCATION OF SPECIFIED VARIABLE
.6.9.8		DEC		b	VAL	VALUE OF VARIABLE FOR INTERRUPTION
.6.9.9		DEC		c	LAM	ASSOCIATED LAMBDA BOX
. . .		. . .				

PSEUDO 3 OPTION

LOC (6)	7	OP (8–10)	11	12		
.4.2.1		DEC		a	Θ_0	INITIAL RIGHT ASCENSION (INJECTION)
.4.2.2		DEC		b	Φ_0	INITIAL DECLINATION (INJECTION)
.4.2.3		DEC		c	A	COEFFICIENT OF LINEAR TERM FOR Θ'_s
.4.2.4		DEC		c	B	COEFFICIENT OF QUADRATIC TERM FOR Θ'_s
. . .		. . .				
.4.2.5		DEC		c	D	COEFFICIENT OF LINEAR TERM FOR Φ'_s
.4.2.6		DEC		c	E	COEFFICIENT OF QUADRATIC TERM FOR Φ'_s
.4.2.7		DEC		d	T_{IS}	INITIAL TIME OF INJECTION
. . .		. . .				

EARTH POTENTIAL FUNCTION

LOC (6)	7	OP (8–10)	11	12		
.4.2.8		DEC		a	GM_E	UNIVERSAL GRAVITATIONAL CONSTANT (MASS OF EARTH)
.4.2.9		DEC		b	R_E	EARTH RADIUS (EQUATORIAL)
. . .		. . .				
.4.3.0		DEC		c	D	4th HARMONIC CONSTANT
.4.3.1		DEC		c	H	3RD HARMONIC CONSTANT
.4.3.2		DEC		c	J	2ND HARMONIC CONSTANT

J. NICKERSON

E60-15-10

JET-PROPULSION-LABORATORY
4800 OAK GROVE AVENUE
PASADENA, CALIFORNIA

PAGE TEN

TIME STOPS:

LOC	OP	TIME, LAMXX	COMMENTS
1.0.5.0	D.E.C	a, a	
1.0.5.2	D.E.C	b, b	
1.0.5.4	D.E.C		
1.0.5.6	D.E.C		
. . .	. .		
1.0.5.8	D.E.C		
1.0.6.0	D.E.C		
1.0.6.2	D.E.C		
1.0.6.4	D.E.C		
. . .	. .		
.4.1.6	D.E.C		SPECIAL PRINT INTERVALS
.4.1.7	D.E.C		: USE LAM 41 TO
.4.1.8	D.E.C		PICK UP CONSECUTIVE
.4.1.9	D.E.C		VALUES.
.4.2.0	D.E.C		
. . .	. .		
. . .	. .		
. . .	. .		
. . .	. .		
. . .	. .		
. . .	. .		
. . .	. .		
. . .	. .		
. . .	. .		
. . .	. .		
. . .	. .		
. . .	. .		
. . .	. .		
. . .	. .		
. . .	. .		
. . .	. .		
. . .	. .		
. . .	. .		
. . .	. .		
. . .	. .		
. . .	. .		
. . .	. .		
. . .	. .		
. . .	. .		
. . .	. .		

J. NICKERSON

EGO-18-11

JET-PROPULSION-LABORATORY
4800 OAK GROVE AVENUE
PASADENA, CALIFORNIA

PAGE ELEVEN

POLAR COORDINATES:				SW4≠0	EXPLANATION
LOC	OP				SINGLE VALUED TABLE
5.0.0	D.E.C		(1)		σ_{LS} = LAUNCH SIGMA
5.0.1	D.E.C	0	(2)		σ_{LA} = 0
5.0.2	D.E.C	0	(3)	T=	$\Delta\sigma$ = 0 ⇒ NOT MULTIVALUED TABLE
. . .	. . .				
5.0.3	D.E.C		(4)	R	R = RADIUS
5.2.3	D.E.C		(5)	PHI	Φ = GEOCENTRIC LATITUDE
5.4.3	D.E.C		(6)	V	V = VELOCITY
5.6.3	D.E.C		(7)	GAMMA	γ = PITCH ANGLE
5.8.3	D.E.C		(8)	SIGMA	σ = AZIMUTH ANGLE
6.0.3	D.E.C		(9)	THETA	θ = LONGITUDE
. . .	T.R.A		3,4		

CARTESIAN COORDINATES:						SW5≠0	EXPLANATION
LOC	OP		CASE 1	CASE 2	CASE 3		
3.5.0	D.E.C						ID. NO. XXX.XXX
3.6.3	D.E.C						X_P
3.6.4	D.E.C						Y_P
3.6.5	D.E.C						Z_P
. . .	. . .						
3.6.6	D.E.C						$\dot{X}_P$
3.6.7	D.E.C						$\dot{Y}_P$
3.6.8	D.E.C						$\dot{Z}_P$
. . .	. . .						
. . .	T.R.A		3,4	3,4	3,4		
. . .	. . .		CASE 4	CASE 5	CASE 6		
3.5.0	D.E.C						ID. NO. XXX.XXX
3.6.3	D.E.C						X_P
3.6.4	D.E.C						Y_P
3.6.5	D.E.C						Z_P
. . .	. . .						
3.6.6	D.E.C						$\dot{X}_P$
3.6.7	D.E.C						$\dot{Y}_P$
3.6.8	D.E.C						$\dot{Z}_P$
. . .	. . .						
. . .	T.R.A		3,4	3,4	3,4		

J. NICKERSON

EGO-18-12

IX. DESCRIPTION OF THE OUTPUT VARIABLES

A. Monitor Output Description

The monitor output can be divided into five classes:

1. Error comments
2. Search partials
3. Extra partials
4. Monitor control word output
5. End-of-batch output

The error comments are printed under the following conditions:

1. No program specified

   Comment: "Job aborted because A was input as zero."
2. Error reading input cards

   Comment: "Job aborted due to INP1 error return."
3. Divergence of an N x N search

   Comment: "Job aborted because search failed to converge."
4. Error in search BCD or decimal input

   Comment: "Job aborted due to BCD input error."
5. Divergence of quadratic one by one search

   Comment: "This job aborted due to divergence of ØBØ."
6. Failure of tape or tape unit when making a SAVE tape

   Comment: "Job aborted because of redundancies in store routine."
7. Failure of tape or tape unit when attempting to read a program into core from the monitor tape.

   a. First time

      Comment: "Job trouble due to bad tape unit B8. Change units and hit start."

   b. Permanent failure

      Comment: "Job aborted due to tape trouble."
8. Not inputting time values when using VRPNCH option

   Comment: "Variational equation tape-write flagged, no time values input."

9. Misspelled BCD control word

   Comment: "Job aborted due to BCD input error."

10. Tape on B8 not the tape specified

    Comment: "XXXX is on B8. Please mount XXXX on B8 and do restart. To ignore, push 'start'."

The search partials are printed on request prior to each search iteration. For example, assume that we are doing a 3 x 3 search with independent variables X, Y, Z and dependent variables B·T, B·R, and T(F). The output would be the following:

```
B·T/X      ±.XXXXXXXXE±XX   B·T/Y      ±.XXXXXXXXE±XX   B·T/Z      ±.XXXXXXXXE±XX

B·R/X      ±.XXXXXXXXE±XX   B·R/Y      ±.XXXXXXXXE±XX   B·R/Z      ±.XXXXXXXXE±XX

T(F)/X     ±.XXXXXXXXE±XX   T(F)/Y     ±.XXXXXXXXE±XX   T(F)/Z     ±.XXXXXXXXE±XX

DELTA X    ±.XXXXXXXXE±XX   DELTA Y    ±.XXXXXXXXE±XX   DELTA Z    ±.XXXXXXXXE±XX

B·T B·R/X ±.XXXXXXXXE±XX   B·T B·R/Y ±.XXXXXXXXE±XX   B·T B·R/Z ±.XXXXXXXXE±XX
```

where the first three rows are the partials used in the search. The row of deltas is the set of increments added to the independent variables for this search iteration. The row B·T B·R/X, B·T B·R/Y, B·T B·R/Z is an approximation to $\partial B/\partial X$, $\partial B/\partial Y$, $\partial B/\partial Z$. If, on the other hand, we were doing a quadratic 1 x 1 search with independent variable TMLNCH and dependent variables B·T and B·R, our output would look as follows:

```
B·T/TMLNCH        ±.XXXXXXXXE±XX B·R/TMLNCH    ±.XXXXXXXXE±XX
B·T B·R/TMLNCH ±.XXXXXXXXE±XX DELTA TMLNCH ±.XXXXXXXXE±XX
```

If, on the previous N x N search, we were computing two extra partials with V(H) and SELAT as dependent variables, we would have the following additional output:

V(H)/X	±.XXXXXXXXE ±XX	SELAT/X	±.XXXXXXXXE ±XX
V(H)/Y	±.XXXXXXXXE ±XX	SELAT/Y	±.XXXXXXXXE ±XX
V(H)/Z	±.XXXXXXXXE ±XX	SELAT/Z	±.XXXXXXXXE ±XX

The monitor control word input is printed at the end of each case. It consists of all BCD monitor control words used in defining the case. If the case was a search, the decimal values desired are also printed. If SAVE tape was made, the number of words per record and file number are printed. This page is headed by the Space Flight Trajectory and/or the Powered Flight BCD header. This is followed by the time on and off of the case.

The end-of-batch output is triggered by the TRA 180 control card. The monitor backspaces the input tape and prints all of the monitor and program input that generated this batch. The input tape is then positioned so that the next job can be run correctly and control is returned to the FORTRAN Monitor.

B. Space Trajectory Output Description

The following IBM listing describes in detail the various quantities printed out by the Space Trajectory Program. The list is divided into sections which correspond to the various possible output blocks.

CONSTANTS

CASE (NO.) SPACE TRAJECTORIES (PAGE NO.)

(IDENTIFICATION INFORMATION AS INPUT---119 BCD CHARACTERS POSSIBLE)
EPHEMERIDES WITH VENUS VELOCITIES

1ST LINE OF PRINT OUT
GME GRAVITATIONAL COEFFICIENT FOR THE EARTH IN KM*3/SEC*2
J COEFFICIENT OF THE SECOND HARMONIC IN EARTHS OBLATENESS
H COEFFICIENT OF THE THIRD HARMONIC IN EARTHS OBLATENESS
D COEFFICIENT OF THE FOURTH HARMONIC IN EARTHS OBLATENESS
RE EARTH RADIUS TO BE USED IN THE EARTHS OBLATE POTENTIAL, KM
REM EARTH RADIUS TO CONVERT LUNAR EPHEMERIS TO KM
2ND LINE OF PRINT OUT
G UNIVERSAL GRAVITATIONAL CONSTANT FOR LUNAR OBLATENESS, KM*3/SEC*2-KG
A MOMENTS OF INERTIA OF MOON FOR LUNAR OBLATE POTENTIAL,KG-KM*2
B
C
CME ROTATION RATE OF THE EARTH IN DEG/SEC
AU ASTRONOMICAL UNIT TO CONVERT PLANETARY EPHEMERIDES TO KM
3RD LINE OF PRINT OUT
GMM GRAVITATIONAL COEFFICIENT FOR THE MOON IN KM*3/SEC*2
GMS GRAVITATIONAL COEFFICIENT FOR THE SUN IN KM*3/SEC*2
GMV GRAVITATIONAL COEFFICIENT FOR VENUS IN KM*3/SEC*2
GMA GRAVITATIONAL COEFFICIENT FOR MARS IN KM*3/SEC*2
GMB GRAVITATIONAL COEFFICIENT FOR BARYCENTER IN KM*3/SEC*2
GMJ GRAVITATIONAL COEFFICIENT FOR JUPITER IN KM*3/SEC*2
4TH LINE OF PRINTOUT
GOM MOONS GM, USED WITH EPHEMERIDES, NOT PERTURBATIONS, KM*3/SEC*2
GEM EARTHS GM, USED WITH EPHEMERIDES, NOT PERTURBATIONS, KM*3/SEC*2
GMP PROBES GM, USED WITH GOM, GEM TO INTEGRATE PATH OF BODY, KM*3/SEC*2

INJECTION CONDITIONS

```
INJECTION CONDITIONS      (EQUINOX)      (TARGET)      (J.D.)      (CALENDER DATE)

     (BCD) CENTRAL BODY

 *IF COORDINATES ARE INERTIAL CARTESIAN
        XO VERNAL EQUINOX CARTESIAN POSITION, KM
        YO
        ZO
       DXO VERNAL EQUINOX CARTESIAN VELOCITY, KM/SEC
       DYO
       DZO

 *IF COORDINATES ARE SPHERICAL INERTIAL
       RAD RADIUS, KM
       DEC DECLINATION, DEG
        RA RIGHT ASCENSION, DEG
         V VELOCITY, KM/SEC
       PTI PATH ANGLE, DEG
       AZI AZIMUTH ANGLE, DEG

 *IF COORDINATES ARE EARTH-FIXED OR SELENOGRAPHIC
       RAD RADIUS, KM
       LAT LATITUDE, DEG
       LON LONGITUDE, DEG
        VE VELOCITY RELATIVE TO ROTATING COORDINATE SYSTEM, KM/SEC
       PTR PATH ANGLE RELATIVE TO ROTATING COORDINATE SYSTEM, DEG
       AZR AZIMUTH ANGLE RELATIVE TO ROTATING COORDINATE SYSTEM, DEG

 *IF COORDINATES ARE ENERGY-ASYMPTOTE
       AZL AZIMUTH AT LAUNCH SITE, DEG
       RAD RADIUS, KM
       PTH PATH ANGLE, DEG
        C3 ENERGY CONSTANT FROM VIS VIVA INTEGRAL, KM*2/SEC*2
       DAO DECLINATION OF OUTGOING ASYMPTOTE, DEG
       RAO RIGHT ASCENSION OF OUTGOING ASYMPTOTE, DEG

     (BCD) TYPE - EARTH FIXED,SPHERICAL INERTIAL,SELENOGRAPHIC,ENERGY-ASYMPTOTE
       GMC ELEVATION ANGLE OF REFERENCE VECTOR FOR POWERED FLIGHT, DEG
       SGC AZIMUTH ANGLE OF REFERENCE VECTOR, DEG
        TU SECONDS PAST MIDNIGHT OF INJECTION TIME, SEC
       GHA GREENWICH HOUR ANGLE OF VERNAL EQUINOX AT INJECTION EPOCH, DEG
       GHO GREENWICH HOUR ANGLE OF VERNAL EQUINOX AT PREVIOUS MIDNIGHT, DEG
     (BCD) REFERENCE PLANE..ECLIPTIC IS PRINTED IF INPUT IS ECLIPTIC COORDINATES
```

```
                                   GEOCENTRIC
(TIME PAST INJECTION)          (EQUINOX)          (J.D.)          (CALENDAR DATE)

GEOCENTRIC                                                        (COORDINATE PLANE)

1ST LINE OF PRINT OUT
         X VERNAL EQUINOX CARTESIAN POSITION, KM
         Y
         Z
        DX VERNAL EQUINOX CARTESIAN VELOCITY, KM/SEC
        DY
        DZ
2ND LINE OF PRINT OUT
         R RADIUS, KM
       DEC DECLINATION, DEG
        RA RIGHT ASCENSION, DEG
         V INERTIAL SPEED, KM/SEC
       PTH INERTIAL PATH ANGLE, DEG
        AZ INERTIAL AZIMUTH ANGLE, DEG
3RD LINE OF PRINT OUT
         R RADIUS, KM
       LAT GEOCENTRIC LATITUDE, DEG
       LON LONGITUDE, DEG
        VE EARTH'FIXED SPEED, KM/SEC
       PTE EARTH'FIXED PATH ANGLE, DEG
       AZE EARTH'FIXED AZIMUTH ANGLE, DEG
4TH LINE OF PRINT OUT
        XS THE GEOCENTRIC POSITION OF THE SUN, KM
        YS
        ZS
       DXS THE GEOCENTRIC VELOCITY OF THE SUN, KM/SEC
       DYS
       DZS
5TH LINE OF PRINT OUT
        XM THE GEOCENTRIC POSITION OF THE MOON, KM
        YM
        ZM
       DXM THE GEOCENTRIC VELOCITY OF THE MOON, KM/SEC
       DYM
       DZM
6TH LINE OF PRINT OUT
        XT THE GEOCENTRIC POSITION OF THE TARGET BODY, KM
        YT
        ZT
       DXT THE GEOCENTRIC VELOCITY OF THE TARGET BODY, KM/SEC
       DYT
       DZT
7TH LINE OF PRINT OUT
        RS EARTH'SUN DISTANCE, KM
        VS GEOCENTRIC SPEED OF SUN, KM/SEC
        RM EARTH'MOON DISTANCE, KM
        VM GEOCENTRIC SPEED OF MOON, KM/SEC
        RT EARTH'TARGET DISTANCE, KM
        VT GEOCENTRIC SPEED OF TARGET, KM/SEC
```

CONTINUED ON NEXT PAGE

CONTINUED

```
8TH LINE OF PRINT OUT
       GED GEODETIC LATITUDE, DEG
       ALT ALTITUDE ABOVE THE EARTHS SURFACE, KM
       LOS LONGITUDE OF SUN, DEG
       RAS RIGHT ASCENSION OF SUN, DEG
       RAM RIGHT ASCENSION OF MOON, DEG
       LOM LONGITUDE OF MOON, DEG
9TH LINE OF PRINT OUT
       DUT EPHEMERIS TIME MINUS UNIVERSAL TIME, SEC
        DT ADAMS-MOULTON STEP SIZE, SEC
        DR GEOCENTRIC RADIAL SPEED OF PROBE, KM/SEC
       SHA SUN SHADOW PARAMETER, KM
       DES DECLINATION OF THE SUN, DEG
       DEM DECLINATION OF THE MOON, DEG
10TH LINE OF PRINTOUT
       DAC INSTANTANEOUS ACCELERATION DUE TO DRAG, KM/SEC*2


IF PUBLIC INFORMATION OUTPUT IS REQUESTED THE FOLLOWING FOUR LINES ARE PRINTED

10TH LINE OF PRINTOUT
       BOARD UNITS
11TH LINE OF PRINTOUT
        UE X BOARD COORDINATE OF EARTH, BOARD UNITS
        VE Y BOARD COORDINATE OF EARTH, BOARD UNITS
       ALF CENTERING ANGLE, DEGREES
        S1 SCALE FACTOR 1, STATUE MILES PER SQUARE
        S2 SCALE FACTOR 2, STATUE MILES PER SQUARE
12TH LINE OF PRINTOUT
       UP1 X BOARD COORDINATE OF PROBE USING S1, BOARD UNITS
       VP1 Y BOARD COORDINATE OF PROBE USING S1, BOARD UNITS
       UM1 X BOARD COORDINATE OF MOON USING S1, BOARD UNITS
       VM1 Y BOARD COORDINATE OF MOON USING S1, BOARD UNITS
         S DIRECTION OF SUN, DEGREES
         M DIRECTION OF MOON, DEGREES
13TH LINE OF PRINTOUT
       UP2 X BOARD COORDINATE OF PROBE USING S2, BOARD UNITS
       VP2 Y BOARD COORDINATE OF PROBE USING S2, BOARD UNITS
       UM2 X BOARD COORDINATE OF MOON USING S2, BOARD UNITS
       VM2 Y BOARD COORDINATE OF MOON USING S2, BOARD UNITS
        GM DIRECTION OF GREENWICH MERIDIAN
```

HELIOCENTRIC (COORDINATE PLANE)

1ST LINE OF PRINT OUT
- X VERNAL EQUINOX CARTESIAN POSITION, KM
- Y
- Z
- DX VERNAL EQUINOX CARTESIAN VELOCITY, KM/SEC
- DY
- DZ

2ND LINE OF PRINT OUT
- R SUN'PROBE RADIUS, KM
- LAT CELESTIAL LATITUDE - OR DECLINATION - OF THE PROBE, DEG
- LON CELESTIAL LONGITUDE - OR RIGHT ASCENSION - OF THE PROBE, DEG
- V INERTIAL SPEED, KM/SEC
- PTH PATH ANGLE, DEG
- AZ AZIMUTH ANGLE, DEG

3RD LINE OF PRINT OUT
- XE HELIOCENTRIC POSITION OF THE EARTH, KM
- YE
- ZE
- DXE HELIOCENTRIC VELOCITY OF THE EARTH, KM/SEC
- DYE
- DZE

4TH LINE OF PRINT OUT
- XT HELIOCENTRIC POSITION OF THE TARGET, KM
- YT
- ZT
- DXT HELIOCENTRIC VELOCITY OF THE TARGET, KM/SEC
- DYT
- DZT

5TH LINE OF PRINT OUT
- LTE CELESTIAL LATITUDE - OR DECLINATION - OF THE EARTH, DEG
- LOE CELESTIAL LONGITUDE - OR RIGHT ASCENSION - OF THE EARTH, DEG
- LTT CELESTIAL LATITUDE - OR DECLINATION - OF THE TARGET, DEG
- LOT CELESTIAL LONGITUDE - OR RIGHT ASCENSION - OF THE TARGET, DEG
- RST DISTANCE OF THE TARGET FROM THE SUN, KM
- VST SPEED OF THE TARGET WITH RESPECT TO THE SUN, KM/SEC

6TH LINE OF PRINT OUT
- EPS EARTH-PROBE-SUN ANGLE, DEG
- ESP EARTH-SUN-PROBE ANGLE, DEG
- SEP SUN-EARTH-PROBE ANGLE, DEG
- EPM EARTH-PROBE-MOON ANGLE, DEG
- EMP EARTH-MOON-PROBE ANGLE, DEG
- MEP MOON-EARTH-PROBE ANGLE, DEG

7TH LINE OF PRINT OUT
- MPS MOON-PROBE-SUN ANGLE, DEG
- MSP MOON-SUN-PROBE ANGLE, DEG
- SMP SUN-MOON-PROBE ANGLE, DEG
- SEM SUN-EARTH-MOON ANGLE, DEG
- EMS EARTH-MOON-SUN ANGLE, DEG
- ESM EARTH-SUN-MOON ANGLE, DEG

CONTINUED ON NEXT PAGE

CONTINUED

8TH LINE OF PRINT OUT

EPT EARTH-PROBE-TARGET ANGLE, DEG
ETP EARTH-TARGET-PROBE ANGLE, DEG
TEP TARGET-EARTH-PROBE ANGLE, DEG
TPS TARGET-PROBE-SUN ANGLE, DEG
TSP TARGET-SUN-PROBE ANGLE, DEG
STP SUN-TARGET-PROBE ANGLE, DEG

9TH LINE OF PRINT OUT

SET SUN-EARTH-TARGET ANGLE, DEG
STE SUN-TARGET-EARTH ANGLE, DEG
EST EARTH-SUN-TARGET ANGLE, DEG
RPM PROBE-MOON DISTANCE, KM
RPT PROBE-TARGET DISTANCE, KM
SPN SUN-PROBE-NEAR LIMB OF EARTH ANGLE, DEG

10TH LINE OF PRINT OUT

GCE CLOCK ANGLE OF EARTH, DEG
GCT CLOCK ANGLE OF TARGET, DEG
SIP SUN-PROBE-NEAR LIMB OF TARGET ANGLE, DEG
CPT CANOPUS-PROBE-TARGET ANGLE, DEG
SIN CANOPUS-PROBE-NEAR LIMB OF TARGET ANGLE, DEG
D1 RADIUS OF A CIRCLE (TARGET) USED IN CONSTRUCTION OF VISIBLE PLANET,CM

11TH LINE OF PRINT OUT

REP EARTH PROBE DISTANCE, KM
VEP VELOCITY OF THE PROBE WITH RESPECT TO EARTH, KM/SEC
CPE CANOPUS-PROBE-EARTH ANGLE, DEG
CPS CANOPUS-PROBE-SUN ANGLE, DEG
D2 SEMI-MINOR AXIS OF ELLIPSE USED IN CONSTRUCTION OF VISIBLE PLANET, CM
D3 DISTANCE FROM INTERSECTION OF ELLIPSE WITH CIRCLE TO THE DIAMETER (OF THE CIRCLE) THAT IS PERPENDICULAR TO D1, IN CONSTRUCTION OF VISIBLE PLANET, CM

IF PUBLIC INFORMATION OUTPUT IS REQUESTED THE FOLLOWING TWO LINES ARE PRINTED

12TH LINE OF PRINTOUT

PUBLIC INFORMATION

13 LINE OF PRINTOUT

X VERNAL EQUINOX ECLIPTIC X COMP. OF HEL. POS. OF PROBE, BOARD UNITS
Y VERNAL EQUINOX ECLIPTIC Y COMP. OF HEL. POS. OF PROBE, BOARD UNITS
RPE EARTH PROBE DISTANCE, STATUE MILES
RPT TARGET PROBE DISTANCE, STATUE MILES
VGC GEOCENTRIC INERTIAL SPEED OF PROBE, STATUE MILES/HR
V HELIOCENTRIC INERTIAL SPEED OF PROBE, STATUE MILES/HR

(TARGET)CENTRIC

(TARGET)CENTRIC (COORDINATE PLANE)

```
1ST LINE OF PRINT OUT
         X TARGET-CENTERED VERNAL EQUINOX POSITION, KM
         Y
         Z
        DX TARGET-CENTERED VERNAL EQUINOX VELOCITY, KM/SEC
        DY
        DZ
2ND LINE OF PRINT OUT
         R RADIUS FROM TARGET CENTER, KM
       DEC DECLINATION - OR CELESTIAL LATITUDE - DEG
        RA RIGHT ASCENSION - OR CELESTIAL LONGITUDE - DEG
         V SPEED RELATIVE TO THE TARGET, KM/SEC
       PTH TARGET-BODY PATH ANGLE, DEG
        AZ TARGET-BODY AZIMUTH ANGLE, DEG
3RD LINE OF PRINT OUT
         R RADIUS FROM TARGET CENTER, KM
       LAT TARGET-CENTERED LATITUDE, DEG
       LON TARGET-CENTERED LONGITUDE, DEG
        VR SPEED RELATIVE TO THE ROTATING TARGET, KM/SEC
       PTR ROTATING TARGET-BODY PATH ANGLE, DEG
       AZR ROTATING TARGET-BODY AZIMUTH ANGLE, DEG
4TH LINE OF PRINT OUT
       LTS SELENOGRAPHIC LATITUDE OF THE SUN, DEG
       LNS SELENOGRAPHIC LONGITUDE OF THE SUN, DEG
       LTE SELENOGRAPHIC LATITUDE OF THE EARTH, DEG
       LNE SELENOGRAPHIC LONGITUDE OF THE EARTH, DEG
5TH LINE OF PRINT OUT
       ALT ALTITUDE ABOVE THE TARGET BODYS SURFACE, KM
       SHA SUNS SHADOW PARAMETER, KM
           SHA = -ABS(RTP X 1RTS)*SGN(RTP DOT RTS)
       ALP ILLUMINATED CRESCENT ORIENTATION VIEWING ANGLE, DEG
           ALP = ARCOS(A DOT V) WHERE -S3 = 1RTP    W = 1(S3 XS4)    V = WXS3
                                       S4 = 1RTS    U = (0,0,1)      A = 1(UXS3)
        DR RADIAL RATE, KM/SEC
        DP TRANSVERSE ANGULAR VELOCITY, DEG/SEC
       ASD ANGULAR SEMIDIAMETER, DEG
6TH LINE OF PRINT OUT
       HGE RIGHT ASCENSION OF EARTH IN SPACECRAFT COORDINATE SYSTEM, DEG
       SVL DECLINATION OF TARGET IN SPACECRAFT COORDINATE SYSTEM, DEG
       HNG RIGHT ASCENSION OF TARGET IN SPACECRAFT COORDINATE SYSTEM, DEG
       SIA EARTH-PROBE-NEAR LIMB OF TARGET ANGLE, DEG
```

GEO OR HELIO OR TARGET CONIC

GROUP A

(BODY) CONIC

EPOCH OF PERICENTER PASSAGE JULIAN DATE ( ) (CALENDAR DATE)

1ST LINE OF PRINTOUT

SMA SEMIMAJOR AXIS,KM
ECC ECCENTRICITY,UNITLESS
B MAGNITUDE OF B VECTOR,KM
SLR SEMILATUS RECTUM,KM
APO APOCENTER DISTANCE,KM
RCA CLOSEST APPROACH DISTANCE,KM

2ND LINE OF PRINTOUT

VH HYPERBOLIC EXCESS SPEED,VELOCITY AT APOGEE FOR ELLIPSE,KM/SEC
C3 TWICE TOTAL ENERGY PER UNIT MASS OR VIS VIVA INTEGRAL,KM*2/SEC*2
C1 ANGULAR MOMENTUM,KM*2/SEC
TFP TIME FROM PERICENTER PASSAGE,SEC
TF TIME FROM INJ TO PERICENTER PASSAGE IN HRS FOR EARTH-MOON TRAJ, IN DAYS OTHERWISE

PER PERIOD, MIN EXCEPT DAYS IF HELIC, PRINTED ONLY IF C3 IS -
LTF LINEARIZED TIME-OF-FLIGHT IN HRS FOR EARTH-MOON TRAJ, IN DAYS OTHERWISE PRINTED ONLY IF C3 IS + IN PLACE OF PER

3RD LINE OF PRINTOUT

TA TRUE ANOMALY,DEG
MTA MAXIMUM TRUE ANOMALY,DEG
EA ECCENTRIC ANOMALY,DEG
MA MEAN ANOMALY,DEG
C3J JACOBI CONSTANT, KM*2/SEC*2, PRINTED IN GEC AND SELENO CONICS ONLY
TFI TIME FROM INJECTION IN HRS FOR EARTH-MOON TRAJ, IN DAYS OTHERWISE

4TH LINE OF PRINTOUT (PRINTED ONLY IF C3 IS +)

ZAE ANGLE BETWEEN IN. ASYMPTOTE AT TARG AND TARG-EARTH VECTOR,DEG
ZAP ANGLE BETWEEN IN. ASYMPTOTE AT TARG AND TARG-SUN VECTOR,DEG
ZAC ANGLE BETWEEN IN. ASYMPTOTE AT TARG AND TARG-CANOPUS VECTOR,DEG
DEF ANGLE BETWEEN INCOMING AND OUTGOING ASYMPTOTES,DEG
IR IMPACT RADIUS,KM
GP ANGLE BETWEEN IN. ASYMPTOTE AND ITS PROJ. ON ORB. PLANE OF TARG,DEG

5TH LINE OF PRINTOUT (PRINTED ONLY IN SELENO CONIC)

OP1 FIRST PITCH TURN,DEG
OY YAW TURN,DEG
OP2 SECOND PITCH TURN,DEG

CONTINUED ON NEXT PAGE

CONTINUED

GROUPS B, C, D

ALL VECTORS REFERENCED TO (PLANE)

```
1ST LINE OF PRINTOUT
         X   BODY-PROBE POSITION VECTOR IN COORD. SYSTEM GIVEN ABOVE,KM
         Y
         Z
         DX  BODY-PROBE VELOCITY VECTOR IN COORD. SYSTEM GIVEN ABOVE
         DY
         DZ
2ND LINE OF PRINTOUT
         INC INCLINATION OF PROBE ORBIT PLANE TO PLANE GIVEN ABOVE,DEG
         LAN LONGITUDE OR RIGHT ASCENSION OF ASCENDING NODE,DEG
         APE ARGUMENT OF PERICENTER,DEG
         MX  UNIT M VECTOR      M = W X IRO
         MY
         MZ
3RD LINE OF PRINTOUT
         QX  UNIT Q VECTOR
         QY
         QZ
         RX  UNIT R VECTOR
         RY
         RZ
4TH LINE OF PRINTOUT
         BX  UNIT B VECTOR
         BY
         BZ
         TX  UNIT T VECTOR    T = R X S
         TY
         TZ
5TH LINE OF PRINTOUT(PRINTED ONLY IF C3 IS +)
         SXI UNIT INCOMING ASYMPTOTE VECTOR
         SYI
         SZI
         DAI DECLINATION OR LATITUDE OF INCOMING ASYMPTOTE,DEG
         RAI RIGHT ASCENSION OR LONGITUDE OF INCOMING ASYMPTOTE,DEG
6TH LINE OF PRINTOUT(PRINTED ONLY IF C3 IS +)
         SXO UNIT OUTGOINT ASYMPTOTE VECTOR
         SYO
         SZO
         DAO DECLINATION OR LATITUDE OF OUTGOING ASYMPTOTE,DEG
         RAO RIGHT ASCENSION OR LONGITUDE OF OUTGOING ASYMPTOTE,DEG
7TH LINE OF PRINTOUT(PRINTED ONLY IF C3 IS +)
         ETE ANGLE BETWEEN T AND PROJ. OF EARTH-TARG VECTOR ON R-T PLANE,DEG
         ETS ANGLE BETWEEN T AND PROJ. OF SUN-TARG VECTOR ON R-T PLANE,DEG
         ETC ANGLE BETWEEN T AND PROJ. OF CANOPUS-TARG VECTOR ON R-T PLANE,DEG
         M1  -B.R,KM,PRINTED ONLY IN TRUE LUNAR EQU PLANE
         M2  -B.T,KM,PRINTED ONLY IN TRUE LUNAR EQU PLANE
8TH LINE OF PRINTOUT
         B.T T COMPONENT OF B,KM
         B.R B COMPONENT OF B,KM
         B   MAGNITUDE OF B,KM
         THA DIRECTION ANGLE OF IMPACT PARAMETER IN R-T PLANE MEASURED + FROM T
```

```
                              T VECTOR IN (PLANE )

                             STATICN PRINTS

(TIME PAST INJECTION)        (EQUINCX)        (J.D.)        (CALENDAR DATE)

                            ( SEE * NOTE BELOW )

(STATICN NAME)              UNIFORM TIME              TAU
1ST LINE OF PRINT OUT
         R GEC. RADIUS MAG. OF PROBE, KM
       LAT GEO. LATITUDE, DEG.
       LCN GEO. LONGITUDE, DEG.
2ND LINE OF PRINT OUT
       MIN MINUTES FROM INJECTION
        HA LOCAL HOUR ANGLE OF PROBE, DEG
       DEC LOCAL DECLINATION OF PROBE, DEG
       AZI NORTH AZIMUTH OF PROBE, DEG
       ELE ELEVATION ANGLE OF PROBE, DEG
3RD LINE OF PRINT OUT
       CKM CLOCK ANGLE OF MOON, DEG.
       CKC CLOCK ANGLE OF CANOPUS, DEG.
       CKT CLOCK ANGLE OF TARGET, DEG.
       PSS PROBE-STATION-SUN ANGLE, DEG
       PSM PROBE-STATION-MOON ANGLE, DEG.
4TH LINE OF PRINT OUT
        UT TIME CORRECTICN FOR FREQUENCIES,HOURS
       CHA HOUR-ANGLE RATE, DEG/HR
       DDE DECLINATION RATE, DEG/HR
       DAZ AZIMUTH RATE, DEG/HR
       DEL ELEVATION RATE, DEG/HR
5TH LINE OF PRINT OUT
        ET EPHEMERIS TIME CORRECTOR, HOURS
       RGE SLANT RANGE OF PROBE, KM
       DRG SLANT-RANGE RATE, KM/SEC
       DDR RATE OF THE SLANT-RANGE RATE, KM/SEC
       SLS SPACE LOSS, DB
6TH LINE OF PRINT OUT
       RDI RADIUS OF THE STATICN, KM
       PHI NORTH GEOCENTRIC LATITUDE OF THE STATION, DEG
       THI EAST LONGITUDE OF THE STATION, DEG
       SPS SUN-PROBE-SUN ANGLE, DEG
       POL POLARIZATION ANGLE, DEG.
7TH LINE OF PRINT OUT
        DT TIME FOR LIGHT TO TRAVEL FROM STATICN TO PROBE (SEC.)
       RF1 CNE WAY REFERENCE FREQUENCY, CPS
       RF2 TWO WAY REFERENCE FREQUENCY, CPS
       BFI BEACON FREQUENCY, 1/SEC.
8TH LINE OF PRINT OUT
      ESS1 EXPECTED SIGNAL STRENGTH, OMNI ANTENNA, DB
      ESS2 EXPECTED SIGNAL STRENGTH, HIGH GAIN ANTENNA, DB
        F1 RELATIVE DOPPLER, ONE WAY, CPS
        F2 RELATIVE DOPPLER, TWO WAY, CPS
       PRA PROBE RIGHT ASCENSICN, DEG.
9TH LINE OF PRINT OUT
        RF REFERENCE FREQUENCY, CPS
       DOP DOPPLER RATE    1/SEC**2
```

CONTINUED ON NEXT PAGE

CONTINUED

* THE BODY OF THE PRINTOUT FOR STATICN PRINTS AND VIEW PERIODS IS IDENTICAL. HOWEVER STATION PRINTS ARE MADE AT REGULAR TIME INTERVALS AND NOT HEADED.

THE VIEW PERIOD BLOCK IS PRECEDED BY ONE OF THREE CARDS

START OF VIEW PERIOD

EXTREME ELEVATICN

END OF VIEW PERIOC

```
THE FOLLOWING PRINTOUT OCCURS WHEN THE RADIOMETER
PLANES ARE CROSSED. THIS OCCURS WHEN R.MU = RAD AND
WHEN R.MU = 0 WHERE R=TARGET PROBE VECTOR, MU=UNIT
TARGET SUN VECTOR AND RAD=TARGET RADIUS.

1ST LINE OF PRINTOUT
       RADIOMETER (PLANE)
2ND LINE OF PRINTOUT
       SIA EARTH-PROBE-NEAR LIMB OF TARGET ANGLE,DEG
       SIP SUN-PROBE-NEAR LIMB OF TARGET ANGLE,DEG
       SIN CANOPUS-PROBE-NEAR LIMB OF TARGET ANGLE,DEG
       SPT SUN-PROBE-TARGET ANGLE,DEG
       ASD ANGULAR RADIUS OF TARGET,DEG
3RD LINE OF PRINTOUT
       RPT TARGET-PROBE RADIUS,KM
       LON LONGITUDE OF PROBE AS SEEN FROM EARTH,DEG
       V   SPEED OF PROBE WITH RESPECT TO TARGET,KM/SEC
4TH LINE OF PRINTOUT
       PUL ANGLE MEASURED AT THE PROBE PERPENDICULAR TO THE PROBE-SUN
           VECTOR,FROM THE EARTH-PROBE-SUN PLANE TO THE UPPER
           EDGE OF THE TARGET,DEG
       PDL ANGLE MEASURED AT THE PROBE PERPENDICULAR TO THE PROBE-SUN
           VECTOR FROM THE EARTH-PROBE-SUN PLANE TO THE LOWER
           EDGE OF THE TARGET,DEG
       ACR CENTER OF TARGET-PROBE-EDGE OF TARGET ANGLE,DEG
       ZIP PROJECTION OF THE RADIUS VECTOR ON THE UNIT VECTOR NORMAL
           TO THE EARTH-PROBE-SUN PLANE,KM
```

IF BRONSTEIN ANGLES OUTPUT IS REQUESTED THE FOLLOWING IS PRINTED

1ST LINE OF OUTPUT

```
      BRONSTEIN ANGLES   REFERENCE BODY IS XXXXXX    GHR  GEN HINGE ANGLE,DEG
```

THE FOLLOWING TWO LINES ARE PRINTED FOR EACH NTH BODY

```
      BODY N IS XXXXXX    GHG GENERALIZED HINGE ANGLE, DEG
                          GSL GENERALIZED SWIVEL ANGLE, DEG
                          GCK GENERALIZED CLOCK ANGLE, DEG
                          ACK ALTERNATE CLOCK ANGLE, DEG

                          GLG GENERALIZED LONGITUDE, DEG
                          GLT GENERALIZED LATITUDE, DEG
                          ALT ALTERNATE A LATITUDE, DEG
                          BLT ALTERNATE B LATITUDE, DEG
```

OUTPUT DESIGNATING BEGINNING OF TRAJECTORY BURN

TIME IN GMT, JULIAN DATE, AND CALENDAR DATE

START OF BURN
TH THRUST IN LBS. FORCE
WT WEIGHT IN LBS
WT. WEIGHT FLOW RATE IN LBS/SEC
C3 VALUE OF C3 TO END BURN (KM2/SEC2)
ANG BIAS ANGLE (DEG)

OUTPUT DESIGNATING END OF TRAJECTORY BURN

TIME IN GMT, JULIAN DATE, AND CALENDAR DATE

END OF BURN

OCCULTATION

STATION PRINT

PROBE OCCULTED BY MOON/TARGET

AT START OF OCCULTATION

START OF OCCULTATION BY MOON/TARGET

AT END OF OCCULTATION

END OF OCCULTATION BY MOON/TARGET

PUNCH CARDS FORMAT A

CARD COLUMNS 2-13
12 CHARACTER NAME FOR IDENTIFICATION OF VIEWING STATICN
CARD COLUMNS 15-31
DATE AND TIME OF EVENT, IN THE FOLLCWING FORMAT -
CC 15-16 = YEAR
CC 18-19 = MONTH
CC 21-22 = DAY
CC 24-25 = HOURS
CC 27-28 = MINUTES
CC 30-31 = SECONDS
CARD COLUMNS 33-37
ELEVATION (HOUR ANGLE) OF PROBE, DEG, TC 1 DECIMAL PLACE
CARD COLUMNS 39-46
ELEVATION RATE (HOUR ANGLE RATE) OF PROBE, DEG/SEC, TC 4 DECIMAL PLACES
CARD COLUMNS 48-52
AZIMUTH (DECLINATION) OF PROBE, DEG, TO 1 DECIMAL PLACE
CARD COLUMNS 54-61
AZIMUTH RATE (DECLINATION RATE) OF PROBE, DEG/SEC, TO 4 DECIMAL PLACES
CARD COLUMNS 63-71
RANGE FROM CENTER OF EARTH, KM, NO DECIMAL PLACES
CARD COLUMNS 73-75
CHRONOLOGICAL EVENT COUNT
CARD COLUMNS 77-78
STATICN I.D. NUMBER

ELEVATION, ELEVATION RATE, AZIMUTH, AZIMUTH RATE ARE PUNCHED FOR AZ-EL STATIONS

HOUR ANGLE, HOUR ANGLE RATE, DECLINATICN, DECLINATICN RATE ARE PUNCHED FOR
HA-DEC STATIONS

PUNCH CARDS FORMAT B

OUTPUT WILL BE WRITTEN ON TAPE B-0 FOR THIS FORMAT
CARD COLUMNS 2-3
  STATION IDENTIFICATION NUMBER
CARD COLUMN 4
  LETTER A, B, OR C TO DENOTE WHETHER EVENT IS A RISE, MAXIMUM ELEVATION OR NOT, RESPECTIVELY
CARD COLUMNS 6-26
  DATE AND TIME OF EVENT OCCURRENCE, USING THE FOLLOWING FORMAT
    CC 6-7 = YEAR
    CC 9-10 = MONTH
    CC 12-13 = DAY
    CC 15-16 = HOURS
    CC 18-19 = MINUTES
    CC 21-26 = SECONDS AND MILLISECONDS

IF THE STATION IS AN AZIMUTH-ELEVATION TYPE STATION, THE FOUR QUANTITIES WHICH FOLLOW WILL BE -

CARD COLUMNS 28-34
  ELEVATION, DEGREES, TO 2 DECIMAL PLACES
CARD COLUMNS 36-47
  ELEVATION RATE, DEGREES/SEC, IN FLOATING POINT FORM, SIX DIGITS AND AN EXPONENT
CARD COLUMNS 49-54
  AZIMUTH, DEGREES, TO 2 DECIMAL PLACES
CARD COLUMNS 56-67
  AZIMUTH RATE, DEGREES/SEC, IN FLOATING POINT FORM, SIX DIGITS AND AN EXPONENT

IF THE STATION IS AN HOUR ANGLE-DECLINATION TYPE STATION, THE QUANTITIES HOUR ANGLE, HOUR ANGLE RATE, DECLINATION AND DECLINATION RATE ARE PRINTED IN THE PRECEDING FORMAT, RESPECTIVELY.
CARD COLUMNS 69-80
  SLANT RANGE, KM, IN SIX DIGIT FLOATING POINT FORMAT
CARD COLUMNS 82-93
  SLANT RANGE RATE, KM/SEC, IN SIX DIGIT FLOATING POINT FORMAT
CARD COLUMNS 95-100
  LATITUDE OF PROBE, DEGREES, TO 2 DECIMAL PLACES
CARD COLUMNS 102-108
  LONGITUDE OF PROBE, DEGREES, TO 2 DECIMAL PLACES
CARD COLUMN 110
  H = HOUR ANGLE - DECLINATION MOUNT STATION
  E = ELEVATION - AZIMUTH MOUNT STATION

VARIABLES STORED ON THE TRAJECTORY SAVE TAPE
REFERENCED TO A S/C,GEO,HELIO,OR TARGETCENTRIC COORDINATE SYSTEM

ALL UNITS ARE MADE UP OF KM,SEC,DEGREES UNLESS STATED

PLOT I.D.	VARIABLE NUMBER	DESCRIPTION	
	1,2	DOUBLE PRECISION TIME IN SECONDS PAST 1950.0	
TT	3	TIME IN SECONDS PAST INJECTION	
GX	4	X COMPONENT OF GEOCENTRIC EARTH-PROBE POSITION VECTOR	
GY	5	Y COMPONENT OF GEOCENTRIC EARTH-PROBE POSITION VECTOR	
GZ	6	Z COMPONENT OF GEOCENTRIC EARTH-PROBE POSITION VECTOR	
DX	7	X COMPONENT OF GEOCENTRIC EARTH-PROBE VELOCITY VECTOR	
DY	8	Y COMPONENT OF GEOCENTRIC EARTH-PROBE VELOCITY VECTOR	
DZ	9	Z COMPONENT OF GEOCENTRIC EARTH-PROBE VELOCITY VECTOR	
ES	10	EARTH-PROBE-SUN ANGLE	
SP	11	SUN-EARTH-PROBE ANGLE	
LA	12	GEOCENTRIC LATITUDE OF THE PROBE	
LO	13	GEOCENTRIC LONGITUDE OF THE PROBE	
GR	14	GEOCENTRIC EARTH-PROBE POSITION VECTOR MAGNITUDE	
GV	15	GEOCENTRIC EARTH-PROBE VELOCITY VECTOR MAGNITUDE	
SA	16	DECLINATION OF THE TARGET IN THE S/C COORDINATE SYSTEM	
HI	17	RT. ASCENSION OF THE TARGET IN THE S/C COORDINATE SYSTEM	
TS	18	TARGET-PROBE-SUN ANGLE	
ET	19	EARTH-PROBE-TARGET ANGLE	
AF	20	ALTITUDE OF PROBE ABOVE EARTH	
AT	21	ALTITUDE OF PROBE ABOVE TARGET	
TR	22	TARGETCENTRIC TARGET-PROBE POSITION VECTOR MAGNITUDE	
TV	23	TARGETCENTRIC TARGET-PROBE VELOCITY VECTOR MAGNITUDE	
EN	24	EARTH-PROBE-NEAR LIMB OF TARGET ANGLE	*1
SD	25	ANGULAR SEMI DIAMETER OF TARGET	*2
HG	26	RT. ASCENSION OF THE EARTH IN THE S/C COORDINATE SYSTEM	
HM	27	HELIOCENTRIC SUN-PROBE POSITION VECTOR MAGNITUDE	
HL	28	HELIOCENTRIC LONGITUDE OF PROBE	
RS	29	(HELIO. SUN-PROBE R MAG.)(SIN (HELIO. LONG. OF PROBE))	
RC	30	(HELIO. SUN-PROBE R MAG.)(COS (HELIO. LONG. OF PROBE))	
ST	31	SUN-TARGET-PROBE ANGLE	
AQ	32	ALTITUDE OF PROBE ABOVE ECLIPTIC PLANE	
LH	33	HELIOCENTRIC LATITUDE OF THE PROBE	
MS	34	MOON-PROBE-SUN ANGLE	
SN	35	SUN-PROBE-NEAR LIMB OF EARTH ANGLE	*3
PD	36	DECLINATION OF THE PROBE	
PR	37	RIGHT ASCENSION OF THE PROBE	
MP	38	MOON-EARTH-PROBE ANGLE	
EM	39	EARTH-PROBE-MOON ANGLE	
		NAME OF THE CENTRAL BODY USED IN INTEGRATION,BCD	
		OF DATE GEOCENTRIC EARTH-PROBE POSITION VECTOR	
		OF DATE SELENOCENTRIC MOON-PROBE POSITION VECTOR	
		OF DATE HELIOCENTRIC SUN-PROBE POSITION VECTOR	
		OF DATE APHRODIOCENTRIC VENUS-PROBE POSITION VECTOR	
		OF DATE AREOCENTRIC MARS-PROBE POSITION VECTOR	
		OF DATE ZEOCENTRIC JUPITER-PROBE POSITION VECTOR	

*1 EARTH-PROBE-TARGET ANGLE MINUS ANGULAR SEMI DIAMETER OF THE TARGET
*2 ASD OF A BODY = ARCSIN (RADIUS OF BODY/MAG. OF BODY-PROBE VECTOR)
*3 SUN-PROBE-EARTH ANGLE MINUS ANGULAR SEMI DIAMETER OF THE EARTH

CONTINUED ON NEXT PAGE
CONTINUED

VARIABLES STORED ON THE TRAJECTORY SAVE TAPE
REFERENCED TO A TOPOCENTRIC COORDINATE SYSTEM
AT A VIEWING STATION
(MAXIMUM OF FIVE STATIONS)

DEFINITIONS CAN BE FOUND IN THE WRITEUP OF THE SUBROUTINE LOOP

ALL UNITS ARE MADE UP OF KM,SEC,DEGREES UNLESS STATED

PLOT I.D.	DEFINED ON PAGE	DESCRIPTION	
EL	5	ELEVATION ANGLE	
AZ	7	AZIMUTH ANGLE	
SR	3	SLANT RANGE	
RR	7	SLANT RANGE RATE	
AR	4	SLANT RANGE ACCELERATION	
HA	5	HOUR ANGLE	
DE	7	DECLINATION	
HR	5	HOUR ANGLE RATE	
DR	7	DECLINATION RATE	
ZR	7	AZIMUTH RATE	
ER	5	ELEVATION RATE	
LG	8	LOOK ANGLE	
PA	8	POLARIZATION ANGLE	
SL	4	SPACE LOSS	UNITS ARE DECIBELS
E1	10	EXPECTED SIGNAL STRENGTH 1	UNITS ARE DECIBELS
E2	10	EXPECTED SIGNAL STRENGTH 2	UNITS ARE DECIBELS
DO	11	DOPPLER SHIFT	UNITS ARE CYCLES/SEC
F1	10	F1	UNITS ARE CYCLES/SEC
F2	10	F2	UNITS ARE CYCLES/SEC
CM	9	MOON CLOCK ANGLE	
CC	9	CANOPUS CLOCK ANGLE	
CT	9	TARGET CLOCK ANGLE	
PS	10	PROBE-STATION-SUN ANGLE	
PM	10	PROBE-STATION-MOON ANGLE	
RP	4	PROBE RIGHT ASCENSION	
SS	9	STATION-PROBE-SUN ANGLE	
BF	10	BEACON FREQUENCY	UNITS ARE CYCLES/SEC
		NAME OF THE STATION,BCD	

T1	DEFINED IN REFR. 372.21/9
T2	DEFINED IN REFR. 372.21/9
T3	DEFINED IN REFR. 372.21/9
T4	DEFINED IN REFR. 372.21/9
T5	DEFINED IN REFR. 372.21/9

C. Powered Flight Output Description

The following printout is being used by the IBM 7094 version of the Powered Flight Trajectory Program.

POWERED FLIGHT TRAJECTORY

IDENT

LAUNCH CONDITIONS				DATE	
LAZ	LAT	GED	LON	RAD	
LAUNCH DATE		JDT	GHA	TL	
MTR	FRC	FE	WG	WPD	DIA
BRN	CST				
TIM	ACX	INA	DDX	DDY	DDZ
XP	YP	ZP	DXP	DYP	DZP
R	LAT	LON	VE	PTE	AZE
ALT	RNG	ARC	V	PTH	AZ
GED	F	DRG	N	CHI	TAU
XM	YM	ZM	DXM	DYM	DZM
XDD	YDD	ZDD	ALA	W	PAY
X	Y	Z	DX	DY	DZ
DT	DTP	DW	C3	MCH	BTM CTM

An explanation of the symbols follows:

Under "LAUNCH CONDITIONS"

ROW 1

LAZ -	the launch azimuth
LAT -	the launcher geocentric latitude
GED -	the launcher geodetic latitude
LON -	the launcher longitude
RAD -	the Earth-centered launcher radius

ROW 2

LAUNCH DATE -	Gregorian calendar date
JDT -	the Julian date on midnight of the launch day, days
GHA -	the launch day Greenwich hour angle
TL -	the launch time in seconds from midnight of the launch day, GMT

Next is a two-line group giving initial weight and propulsion data.

ROW 1

MTR -	motor number
FRC -	the vacuum thrust in lb
FE -	the exit area in sq ft
WG -	the initial gross weight in lb
WPD -	the propellant flow rate in lb/sec
DIA -	the missile diameter in ft

ROW 2

BRN -	the stage burning time in sec
CST -	the coast interval following the stage in sec

Next is the main body of the printout.

ROW 1

TIM -	time from launch in sec
ACX -	measurable axial acceleration in m/sec^2
INA -	integral of ACX
DDX -	total accelerations in plumb-line coordinates
DDY -	
DDZ -	

ROW 2

XP -	inertial plumb-line position coordinates
YP -	
ZP -	
DXP -	inertial plumb-line velocity components
DYP -	
DZP -	

ROW 3

R -	missiles Earth-centered radius
LAT -	geocentric latitude
LON -	longitude
VE -	Earth-fixed speed
PTE -	Earth-fixed path angle
AZE -	Earth-fixed azimuth angle

ROW 4

ALT -	the altitude
RNG -	the ground range
ARC -	angle between launch pad, Earth center and vehicle
V -	the inertial speed
PTH -	the inertial path angle
AZ -	the inertial azimuth angle

ROW 5

GED -	the geodetic latitude
F -	the thrust in lb
DRG -	the axial drag in lb
N -	the normal force in lb
CHI -	the pitch thrust attitude angle
TAU -	the yaw thrust attitude angle

ROW 6

XM -	the inertial plumb-line components of the measurable position
YM -	
ZM -	
DXM -	the inertial plumb-line components of the measurable velocity
DYM -	
DZM -	

ROW 7

XDD -	the inertial plumb-line components of the measurable acceleration
YDD -	
ZDD -	
ALA -	the angle of attack
W -	the missile weight in lb
PAY -	the payload weight in lb

ROW 8

X -	true of-date Earth equatorial, vernal equinox position coordinates
Y -	
Z -	
DX -	true of-date Earth equatorial, vernal equinox velocity components
DY -	
DZ -	

ROW 9

DT -	the integration interval in sec
DTP -	modified integration interval
DW -	the fuel flow rate
C3 -	the vis viva integral, or twice the total energy per unit mass
MCH -	MACH number
BTM -	total {burn} time of current stage at this time
CTM -	total {coast} time of current stage at this time

Units are kilometers, seconds, degrees, and pounds unless otherwise specified.

APPENDIX A. 1401 WRITE-UPS

1. 1401 General Program User's Guide

System

Jan 1401 V2 Multipurpose Program

Tape Assignment

Unit 2 . . . . . .V2 . . .Card to Tape

Unit 3 . . . . . .V3 . . .Print and Binary Punch Tape

Unit 3 . . . . . .V3 . . .BCD Punch Tape

Console Setting

I/O Switch Down

S.S. A. . . . . .on for Last Card

S.S. B. . . . . .on for Card-to-Tape

S.S. C. . . . . .on for Print only

S.S. D. . . . . .on for Binary Punch only

S.S. C,D . . . .on for Print and Binary Punch

S.S. D,E . . . .on for BCD Punch only

S.S. C. . . . . .on with the following

S.S. E. . . . . .on for Single Space

S.S. F. . . . . .on for Double Space

S.S. E,F . . . .off for Program Control

S.S. E,F . . . .on for File Skip (V3 only)

S.S. G. . . . . .on for Interrupt

Load

Place Jan 1401 V2 Multipurpose Program deck in reader. Depress "check reset" on reader, "check reset" and "start reset" on console. Then hit "load" on reader; cards will begin to load. When reader light comes on hit "start" to feed the two (2) remaining cards in the reader. Program will loop until the sense switches for the desired operations(s) are set.

Program Stops and Pauses

1044 . . . . . .End-of-file Skip Routine, V3

To skip another file hit "start".

To change operation(s) set sense switch(es) and hit "start".

1104 . . . . . .Tape Error (Print), V3:
Tried four (4) times to read tape and failed.
To skip this record(s) hit "start" and program will continue.

1213 . . . . . .End of Job (Print), V3:
To continue, reset sense switch(es) or tape unit(s) if necessary and hit "start".

1228 . . . . . .Print Error:
To continue hit "start".

1698 . . . . . .Last CardStop (Card-to-Tape), V2:
To continue reset sense switch(es) or tape unit(s) if necessary and hit "start".

1765 . . . . . .End of Reel (Card-to-Tape), V2. To continue reset sense switch(es) or tape units(s) if necessary and hit "start".

1780 . . . . . .Reader Error:
See 1401 Programming Manual for restart procedure.
Hit "start" to return to program.

3287 . . . . . .Tape Error (Punch), V3:
Tried four (4) times to read tape and failed.
To skip this record hit "start" and program will continue.

3326 . . . . . .End of Job (Punch), V3:
Two EOF's have been found.
To continue reset sense switch(es) or tape unit(s) if necessary and hit "start".

3361 . . . . . .Punch Error:
Tried four (4) times to punch correctly. Bad cards in normal punch pocket.
To skip this card hit "start" and program will continue.

3369 . . . . . .Interrupt.
Hit "start" to continue.

Restart Procedure

Set mode switch to "alter". Set manual address switches to 0600. Hit "start reset", "I Add. Reg." key-light, and "start" in that order. Set mode switch to "run" and then hit "start".

Notes

1. None of the above program stops and pauses produce comments on the printer.
2. The combined operation of Card-to-Tape and Tape-to-Card is not allowed.
3. Interrupting should be accomplished by using sense switch G on. The "stop" key should not be used.

2. Instructions for Use of the 1401 Blocked-Tape Program

1. Place the program deck, face down, 9-edge first, in the card reading hopper on the 1402 card-reader.
2. Mount the tape to be processed on a tape unit and dial the unit to "one."
3. Set mode switch to "N", and set desired sense switches.
4. Push "load" button on the 1402.
5. When loading expires, push "start" button.
6. Sense switch settings:

   A: up for last card;
   down for no last card.

   B: up to print cards;
   down to suppress printing.

   C: up to punch cards;
   down to suppress punching.

   D: up for file skip;
   down for no file skip.

   E: not used.

   F: not used.

   G: not used.

Remarks:

1. Sense switch A should always be up.
2. If sense switch D is up, it has precedence over any setting of the other switches.
3. When a file mark is encountered during a spacing, printing, or punching operation, the program will stop at location 413. To continue processing, set the sense switches to the desired configuration and press the "start" key.

4. To interrupt the program, depress the "stop" key. Operation will be resumed when the "start" key is depressed.
5. There is only one stop to the program (location 413) and that occurs when an end-of-file mark is encountered. Any other stop is not programmed and is abnormal. Should one occur, the program may be re-origined at location 333 and the "start" key depressed.
6. If a bad spot on the tape is encountered, the program will make at most nine attempts to reread that particular record. Should redundancy persist, the tape will then be interpreted as is.

APPENDIX B. SUBROUTINE WRITE-UPS

1. LOOP

Identification

LOOP: View Period, Station Print Subroutine

Purpose

To make calculations for view periods and station prints for designated stations, and to print the results of these calculations in a long, complete format; or to produce abbreviated printout or punchout at the user's option.

Restrictions

POL and SPS are not computed correctly unless the $\overline{C}$ vector is pointing toward the Sun from the probe.

Method

Let the space-fixed geocentric Cartesian coordinates of the probe referenced to the true equator and equinox of date be given as (X, Y, Z), and the corresponding velocity vector as $(\dot{X}, \dot{Y}, \dot{Z})$. For a station with coordinates (r_i, ϕ_i, θ_i) the program computes the topocentric quantities to be described herein.

Sketch 1 illustrates the basic coordinate systems:

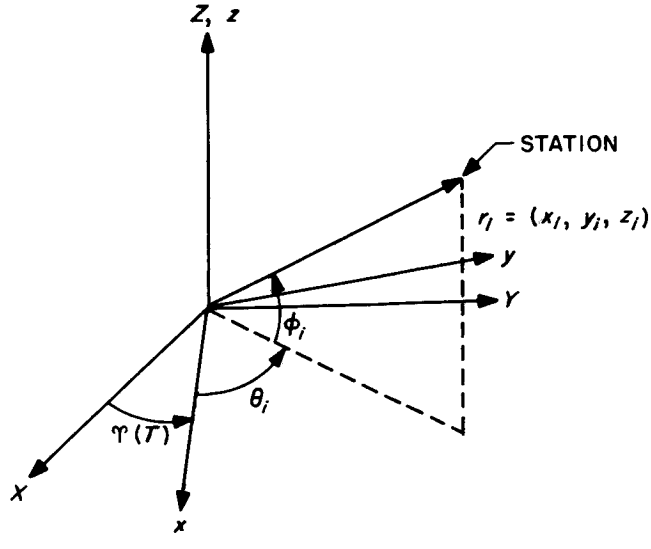

Sketch B-1. Earth - fixed station coordinates

Υ (T) is the right ascension of the Greenwich meridian at epoch T. r_i is the distance from the geocenter to the station, ϕ_i is the geocentric north latitude, and θ_i is the east longitude.

The subroutine LOOP, in its arithmetic calculations, first sets up the matrix shown below:

$$\begin{bmatrix} \cos \Upsilon(T) & \sin \Upsilon(T) & 0 \\ -\sin \Upsilon(T) & \cos \Upsilon(T) & 0 \\ 0 & 0 & 1 \end{bmatrix}$$

This matrix is stored in locations SIMLAR + 40, through SIMLAR + 48, where Υ (T) is the right ascension of the Greenwich meridian at epoch T. The Earth-fixed Cartesian coordinates of the probe (x, y, z) are found below:

$$\begin{pmatrix} x \\ y \\ z \end{pmatrix} = \begin{bmatrix} \cos \Upsilon(T) & \sin \Upsilon(T) & 0 \\ -\sin \Upsilon(T) & \cos \Upsilon(T) & 0 \\ 0 & 0 & 1 \end{bmatrix} \begin{pmatrix} X \\ Y \\ Z \end{pmatrix}$$

(X, Y, Z) are the geocentric space-fixed Cartesian coordinates of the probe and are located in locations CAPX, CAPY, and CAPZ, respectively. From the above matrix multiplication:

$$x = X \cos \Upsilon(T) + Y \sin \Upsilon(T)$$

$$y = -X \sin \Upsilon(T) + Y \cos \Upsilon(T)$$

$$z = Z$$

The corresponding Earth-fixed velocity components ($\dot{x}$, $\dot{y}$, $\dot{z}$) are computed by the following operations:

$$\begin{pmatrix} \dot{x} \\ \dot{y} \\ \dot{z} \end{pmatrix} = \begin{bmatrix} \cos \Upsilon(T) & \sin \Upsilon(T) & 0 \\ -\sin \Upsilon(T) & \cos \Upsilon(T) & 0 \\ 0 & 0 & 1 \end{bmatrix} \begin{pmatrix} \omega Y + \dot{X} \\ \omega X + \dot{Y} \\ \dot{Z} \end{pmatrix}$$

resulting in

$$\dot{x} = \dot{X} \cos \Upsilon(T) + \dot{Y} \sin \Upsilon(T) + \left[\omega Y \cos \Upsilon(T) - \omega X \sin \Upsilon(T)\right]$$

$$= \dot{X} \cos \Upsilon(T) + \dot{Y} \sin \Upsilon(T) + \omega y$$

$$\dot{y} = -\dot{Y} \sin \Upsilon(T) + \dot{X} \cos \Upsilon(T) + \left[\omega Y \sin \Upsilon(T) + \omega X \cos \Upsilon(T)\right]$$

$$= -\dot{Y} \sin \Upsilon(T) + \dot{X} \cos \Upsilon(T) - \omega x$$

$$\dot{z} = \dot{Z}$$

where ω is the rotation rate of the Earth. The coordinates are stored in X) thru X) + 2. The velocities are stored in X). thru X). + 2.

The Earth-fixed Cartesian coordinates of the station are

$$x_i = r_i \cos \phi_i \cos \theta_i$$

$$y_i = r_i \cos \phi_i \sin \theta_i$$

$$z_i = r_i \sin \phi_i$$

The storage is arranged as follows:

SIMLAR + 3	ϕ_i
SIMLAR + 4	θ_i
SIMLAR + 5	r_i
SIMLAR + 11	$\sin\phi_i$
SIMLAR + 12	$\cos\phi_i$
SIMLAR + 13	$\sin\theta_i$
SIMLAR + 14	$\cos\theta_i$

where the sines and cosines of ϕ_i and θ_i are computed in LOOP.

The values of (x_i, y_i, z_i) are placed in SIMLAR + 18 $\longrightarrow x_i$
+ 19 $\longrightarrow y_i$
+ 20 $\longrightarrow z_i$

The topocentric coordinates of the probe are (x_{ip}, y_{ip}, z_{ip}) where

$$x_{ip} = X - x_i \longrightarrow \text{SIMLAR} + 15$$

$$y_{ip} = Y - y_i \longrightarrow \text{SIMLAR} + 16$$

$$z_{ip} = Z - z_i \longrightarrow \text{SIMLAR} + 17$$

The magnitude of the radius vector $\overline{r_{ip}}$ is found by

$$\overline{r_{ip}} = \sqrt{x_{ip}^2 + y_{ip}^2 + z_{ip}^2}$$

and is stored in RAD.

The slant range is stored in RDT and computed by the following:

$$\dot{r}_{ip} = \frac{x_{ip}\dot{X} + y_{ip}\dot{Y} + z_{ip}\dot{Z}}{|\overline{r}_{ip}|}$$

Next the probe right ascension is calculated in the following manner:

$$\begin{pmatrix} x_p \\ y_p \\ z_p \end{pmatrix} = \begin{bmatrix} \cos \Upsilon (T) & -\sin \Upsilon (T) & 0 \\ \sin \Upsilon (T) & \cos \Upsilon (T) & 0 \\ 0 & 0 & 1 \end{bmatrix} \begin{pmatrix} x_{ip} \\ y_{ip} \\ z_{ip} \end{pmatrix}$$

and (x_p, y_p, z_p) are stored in NSTRA through NSTRA + 2, and the 3 x 3 matrix is in SIMLAR + 40 through SIMLAR + 48. Then the probe right ascension, PRA, is computed as follows and stored in location PRA:

$$\text{PRA} = \tan^{-1}\left(\frac{y_p}{x_p}\right) \qquad 0° < \text{PRA} \leq 360°$$

The time from injection in hours is then computed and stored in UT. Calculation of space loss follows where the computed value is stored in SLOSS, and is arrived at as follows, where K_1, K_2 and K_3 are input constants:

$$\text{SLOSS} = K_2 \log_{10} r_i + K_2 \log_{10} K_3 + K_1$$

The computation of $\ddot{r}_{ip}$, the slant-range acceleration is accomplished as follows:

$$\begin{pmatrix} \ddot{x} \\ \ddot{y} \end{pmatrix} = \begin{bmatrix} \cos \Upsilon (T) & \sin \Upsilon (T) \\ -\sin \Upsilon (T) & \cos \Upsilon (T) \end{bmatrix} \left[\begin{pmatrix} \ddot{X} \\ \ddot{Y} \end{pmatrix} + 2\omega \begin{pmatrix} \dot{X} \\ \dot{Y} \end{pmatrix} - \omega^2 \begin{pmatrix} X \\ Y \end{pmatrix} \right]$$

$$\ddot{z} = \ddot{Z}$$

where $\ddot{r} = (\ddot{x}, \ddot{y}, \ddot{z})$

Now to find $\left|\ddot{\bar{r}}_{ip}\right|$ the following equation is used:

$$\left|\bar{r}_{ip}\right| \left|\dot{\bar{r}}_{ip}\right| = \bar{r}_{ip} \cdot \dot{\bar{r}}_{ip} = \bar{r}_{ip} \cdot \dot{\bar{r}}$$

Then differentiating

$$\left|\bar{r}_{ip}\right| \left|\ddot{\bar{r}}_{ip}\right| + \left|\dot{\bar{r}}_{ip}\right|^2 = (\bar{r}_{ip} \cdot \ddot{\bar{r}}) + (\dot{\bar{r}}_{ip} \cdot \dot{\bar{r}}_{ip})$$

or

$$\left|\ddot{\bar{r}}_{ip}\right| = \frac{(\bar{r}_{ip} \cdot \ddot{\bar{r}}) + \left|\dot{\bar{r}}\right|^2 - \left|\dot{\bar{r}}_{ip}\right|^2}{\left|\bar{r}_{ip}\right|}$$

$\left|\ddot{\bar{r}}_{ip}\right|$ is stored in RDDT.

The topocentric hour-angle declination system is described in Sketches B-2 and B-3. In this system the x - y plane has been translated to the station and rotated through the angle θ_i so that x' lies along the meridian, the z' axis remaining parallel to the z axis.

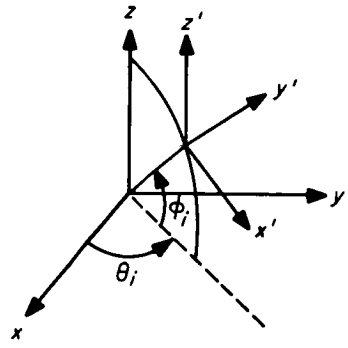

Sketch B-2. Rotation to station meridian

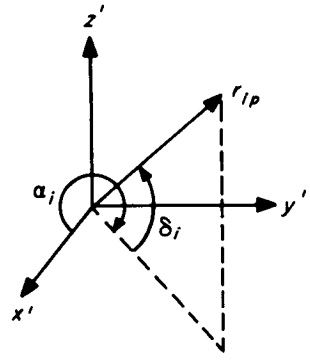

Sketch B-3. Local hour angle-declination coordinate system

The azimuth-elevation topocentric coordinate system is constructed by rotating the x' and y' axes about the y' axis, causing the resultant x'' - y'' plane to be perpendicular to r_i, with the z'' axis pointing to the zenith. This system is illustrated in Sketches B-4 and B-5.

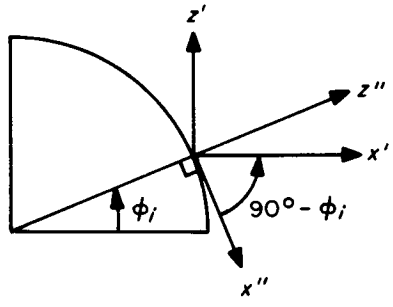

Sketch B-4. Rotation to station latitude

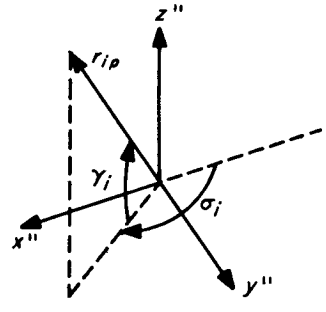

Sketch B-5. Azimuth-elevation coordinate system

The elevation angle and its sine and cosine are found as below:

$$\sin \gamma_i = \frac{\bar{r}_i \cdot \bar{r}_{ip}}{|\bar{r}_i| |\bar{r}_{ip}|} \qquad -90° \leq \gamma_i \leq 90°$$

This expands to

$$\sin \gamma_i = \frac{x_i x_{ip} + y_i y_{ip} + z_i z_{ip}}{\left|\bar{r}_i\right| \left|\bar{r}_{ip}\right|}$$

The angle γ_i and the cosine are then found. These quantities are stored as follows:

$$\gamma_i \longrightarrow \text{ELEV}$$

$$\sin \gamma_i \longrightarrow \text{SIMLAR} + 23$$

$$\cos \gamma_i \longrightarrow \text{SIMLAR} + 24$$

The elevation rate $\dot{\gamma}_i$ is stored in location ELEVD and is computed as shown below:

$$\dot{\gamma}_i = \frac{(x_i \dot{x} + y_i \dot{y} + z_i \dot{z}) - \left|\bar{r}_i\right| \left|\bar{r}_{ip}\right| \sin \gamma_i}{\left|\bar{r}_i\right| \left|\bar{r}_{ip}\right| \cos \gamma_i}$$

The local hour angle α_i is computed as follows and stored in HA:

$$\alpha_i = \theta_i - \tan^{-1}\left(y_{ip}/x_{ip}\right)$$

when

$$\tan^{-1}\left(y_{ip}/x_{ip}\right) \geq 0$$

$$\alpha_i = \theta_i - \tan^{-1}\left(y_{ip}/x_{ip}\right) + 360°, \qquad 0° \leq \alpha_i \leq 360°$$

when

$$\tan^{-1}\left(y_{ip}/x_{ip}\right) < 0$$

The local hour angle rate $\dot{\alpha}_i$ is found as shown below and stored in location HART:

$$\dot{\alpha}_i = \frac{-x_{ip}\dot{y} + y_{ip}\dot{x}}{x_{ip}^2 + y_{ip}^2}$$

In order to determine whether the probe is in view of a given station, the hour angle α_i is used to form a function which will be evaluated to determine visibility.

The functions α' and α'' have the properties:

$$+180 \leq \alpha' \leq -180° \qquad -85° \leq \alpha'' \leq +95°$$

where Sketch B-6 illustrates the functions:

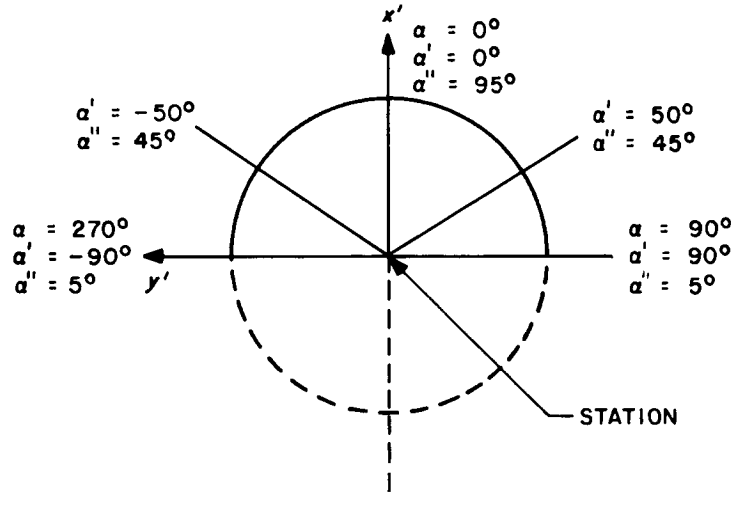

Sketch B-6. Determination of visibility of probe from an hour angle-declination station

When the station is an azimuth-elevation type, the above relationships are not used and the probe is assumed to be in view of a given station if the probe's elevation angle γ_i is greater than 5° above the local horizon.

For hour angle-declination stations, if the absolute value of the function α' is less than 50°, the elevation is assumed to be such that the probe will still be in view at the next iteration. If the value $|\alpha'|$ is greater than 50° the function

α'' is computed. As indicated on the above diagram, if $50° \leq |\alpha'| \leq 90°$, then correspondingly, $45° \geq \alpha'' \geq 5°$. If the relation $\min\left[\alpha'', \gamma_i\right] \geq 5°$ is satisfied, the station is able to view the probe.

The values of either γ_i or α'', depending on the above conditions, and the value of $\dot{\gamma}_i$, and a code word are stored in a block of three locations, the location of the block being determined by the station from which the probe is being viewed.

If a view period event or a station print is to occur, further calculations must be made. The declination of the probe δ_i is given as

$$\delta_i = \sin^{-1}\left(\frac{z_{ip}}{\left|\bar{r}_{ip}\right|}\right)$$

where

$$-90° \leq \delta_i \leq 90°$$

The δ_i is measured positive north. δ_i is stored in location DCL, the $\sin \delta_i$ in SIMLAR + 21, and the $\cos \delta_i$ in SIMLAR + 22. The angular rate of declination $\dot{\delta}_i$ is given as

$$\dot{\delta}_i = \frac{\dot{z} - \dot{r}_{ip} \sin \delta_i}{\left|\bar{r}_{ip}\right| \cos \delta_i}$$

and is stored in DCD.

The quantities σ_i, $\dot{\sigma}_i$, are computed in the following manner and stored in the designated locations:

$$\cos \sigma_i = \frac{z_{ip} \cos \phi_i - x_{ip} \sin \phi_i \cos \theta_i - y_{ip} \sin \phi_i \sin \theta_i}{\left|\bar{r}_{ip}\right| \cos \gamma_i}, \qquad 0° \leq \sigma_i \leq 360°$$

and is stored in SIMLAR + 25. The expression in the numerator above is equivalent to $-x''_{ip}$. σ_i is then computed from the value of $\cos \sigma_i$ and stored in SIG.

If the quantity $y''_{ip} = y_{ip} \cos\theta_i - x_{ip} \sin\theta_i$ is negative, the value of σ_i is between 180° and 360° and is formed by taking $360° - \cos^{-1}(\cos\sigma_i)$.

The value of $\sin\sigma_i$ is computed and stored in SIMLAR + 26.

The value of $\dot{\sigma}_i$ is calculated by the following:

$$\dot{\sigma}_i = \frac{\dot{x}''_{ip} + \cos\sigma_i(\dot{r}_{ip} \cos\gamma_i - r_{ip}\dot{\gamma}_i \sin\gamma_i)}{r_{ip} \cos\gamma_i \sin\sigma_i}$$

and is stored in SIGD.

The quantities X_i, Y_i, Z_i are computed thusly:

$$\begin{pmatrix} X_i \\ Y_i \\ Z_i \end{pmatrix} = \begin{bmatrix} \cos\varphi(t) & -\sin\varphi(t) & 0 \\ \sin\varphi(t) & \cos\varphi(t) & 0 \\ 0 & 0 & 0 \end{bmatrix} \begin{pmatrix} x_i \\ y_i \\ z_i \end{pmatrix}$$

These quantities are stored in SIMLAR + 30, 31, and 32, respectively. They represent a topocentric coordinate system parallel to the (X, Y, Z) axes:

$$X_{ip} = X - X_i$$

$$Y_{ip} = Y - Y_i$$

$$Z_{ip} = Z - Z_i$$

where the quantities computed are then stored in SIMLAR + 27, 28, and 29, respectively.

The look angle λ_i is computed as below:

$$\lambda_i = \cos^{-1}\left[\frac{\overline{R}_{ip} \cdot \overline{C}}{\left|\overline{R}_{ip}\right|}\right] \qquad 0° \leq \lambda_i \leq 180°$$

To expand this relationship

$$\lambda_i = \cos^{-1} \frac{X_{ip} \cdot C_x + Y_{ip} \cdot C_y + Z_{ip} \cdot C_z}{\left|\overline{R}_{ip}\right|}$$

The equation immediately above is the one actually used in the computation of λ_i by the program. λ_i is then stored in LKA.

The next quantity calculated is a 4-quadrant value for the polarization angle p_i. This quantity is computed in the program by the following method:

$$p_i = \tan^{-1}\left(\frac{a}{b}\right) \qquad 0° \leq p_i \leq 360°$$

where

$$a = \frac{\overline{R}_{ip} \times \overline{C}}{\left|\overline{R}_{ip} \times \overline{C}\right|} \cdot \frac{\left[(\overline{R}_{ip} \times \overline{R}) \times \overline{R}_{ip}\right]}{\left|(\overline{R}_{ip} \times \overline{R}) \times \overline{R}_{ip}\right|}$$

and

$$b = \frac{(\overline{C} \times \overline{R}_{ip}) \cdot (\overline{R} \times \overline{R}_{ip})}{\sin\left[\cos^{-1}(\overline{C} \cdot \overline{R}_{ip})\right] \sin\left[\cos^{-1}(\overline{R} \cdot \overline{R}_{ip})\right]}$$

This can be shown to be an expansion of the relationship which gives p_i in its principal quadrants only.

The next calculations are those of the clock angles, of which there are three: the Moon clock angle, the Canopus clock angle, and the target clock angle. The computation for all three is similar, the only difference being the substitution of the unit vector from the probe to the desired celestial body, such as the Moon, Canopus, or the target.

The computations are as follows:

Moon clock angle:

$$\overline{A} = \frac{\overline{R}^1_{sp} \times \overline{R}^1_{ip}}{\left|\overline{R}^1_{sp} \times \overline{R}^1_{ip}\right|}$$

$$\overline{B} = \overline{A} \times \overline{R}^1_{sp}$$

$$\overline{C} = \frac{\left(\overline{R}^1_{sp} \times \overline{R}^1_{pm} \times \overline{R}^1_{sp}\right)}{\left|\overline{R}^1_{sp} \times \overline{R}^1_{pm}\right|}$$

where $\overline{R}^1_{ip}$ is a unit station to probe vector,

$\overline{R}^1_{sp}$ is a unit vector from Sun to probe,

$\overline{R}^1_{pm}$ is a unit vector from probe to Moon.

$$\beta_m = \tan^{-1}\left(\frac{-\overline{A} \cdot \overline{C}}{\overline{B} \cdot \overline{C}}\right) \qquad 0° \leq \beta_m < 360°$$

β_m is stored in CKM.

The Canopus clock angle and the target clock angle β_c and β_t, respectively, are computed the same way except that $\overline{R}^1_{pc}$ and $\overline{R}^1_{pt}$, respectively, must be substituted in place of $\overline{R}^1_{pm}$ in the Moon clock angle calculation. $\overline{R}^1_{pc}$ is a unit Sun to Canopus vector, and $\overline{R}^1_{pt}$ is a unit probe to target vector.

Next calculated are the probe-station-Sun and probe-station-Moon angles.

The probe-station-Sun angle is computed as follows and stored in PSS.

$$PSS = \cos^{-1}\left[\frac{(\overline{A} - \overline{B})}{\left|\overline{A} - \overline{B}\right|} \cdot \frac{-\overline{B}}{\left|-\overline{B}\right|}\right], \qquad 0° \leq PSS \leq 180°$$

where $\overline{A}$ is the Sun-probe vector and $\overline{B}$ is the station-probe vector.

Thus PSS, the probe-station-Sun angle is the angle between the Sun-station vector and the probe-station vector, as shown in Sketch B-7.

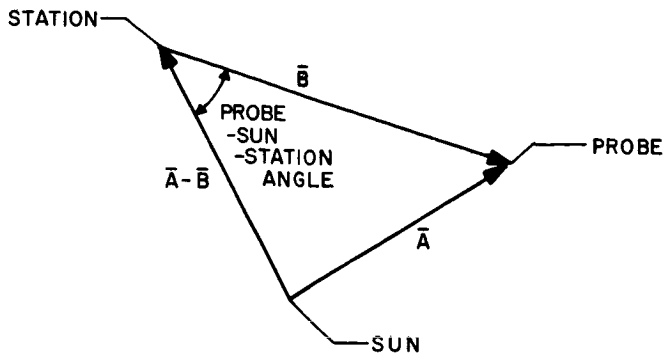

Sketch B-7

Similarly, the probe-station-Moon angle PSM is the angle between the Moon-station vector and the probe-station vector, substituting Moon for Sun in Sketch B-7.

The one-way frequency f_{1i} is computed by

$$f_{1i} = A_{6i}\left[\frac{F_t}{9.3 \times 10^8}\left(\frac{\dot{r}_i}{c} - 1\right)A_2 + \frac{A_1}{9.3 \times 10^8}\right]9.3 \times 10^8$$

where the factor of 9.3×10^8 is used as a scale factor to obtain greater significance in the calculation.

The two-way frequency is computed by

$$f_{2i} = \left(\frac{2\dot{r}_i}{c} \cdot \frac{f_r A_3}{10^6} + \frac{A_4}{10^6}\right)A_{7i} \times 10^6$$

The expected signal strengths, ESS1 and ESS2 are calculated by taking the output signal strength and subtracting from it the value of space loss, the calculation of which is previously described.

The beacon frequency BF1 is calculated as below:

$$BF1 = \left(\frac{-r_i}{c} \times B_5B_6 + B_5B_6 - 960\right) \times 10^6$$

The doppler rate DOP is computed as DOP $= -2\ddot{r}_{ip}/c(960.0)$ where c is the speed of light in km/sec. The quantity DELT $= \dot{r}_i/c$.

The three-way frequencies are computed using exactly five stations and a nonzero number must be input to location ALL5. The three-way frequency is computed by

$$f_{3ji} = \left[A_1 - A_2 A_3 A_5 f_r \left(1 - \frac{\dot{r}_i + \dot{r}_j}{c} \right) \right] A_{8i}$$

where r_j is the slant range from any station $i \neq j$, where the jth station is viewing.

The output notation for three-way frequencies is the following:

$$T1 = f_{3j1} \qquad T2 = f_{3j2} \qquad \cdots \qquad T5 = f_{3j5}$$

Also

$$A_{8i} = 1 \qquad \text{for } i = 1, 3, 4, 5 \qquad \text{and}$$

$$= 30 \qquad \text{for } i = 2$$

<u>Usage</u>

Calling sequence

CALL	LOOP
OP1	X, , Y
OP2	B, , C

where

X is a table of coordinates of the Earth-centered space-fixed of-date equatorial Cartesian position vector of the probe (X + 1 contains y-component).

Y is the corresponding coordinate of the velocity vector. (Y + 1 contains y-coordinate.)

B contains binary code word which is used to determine which stations are to be considered. Each bit corresponds to a station in the station tables contained in LOOP. Each bit from right to left in the address corresponds to the table entries.

C contains the unit vector in the same coordinate system as the X table (defined above) and is centered at the probe and normally points in the direction of the Sun. (C + 1 contains the y-component of the $\overline{C}$ vector.)

OP1 = PZE indicates call was made from Space Flight Trajectory Program. For filling the SAVE tape buffer it must be known which of two programs is calling LOOP. If, and only if, Earth - central body, $\ddot{r}_i$ is computed and therefore DOP.

= MZE indicates call was made from Powered Flight Trajectory Program. (Allows SAVE tape buffer to be properly made.)

OP2 = PZE implies normal computation logic through LOOP. (All quantities possible are computed.)

= MZE implies computation and buffering necessary for "view periods" as done above, only calculation is terminated with the calculation of EL, DEL, HA and DHA.

Additional Options

STACRD - 1 elevation stop for view periods. Value contained here is used to determine horizon in terms of elevation angle.

The following options are available:

VCPR = 0 no Format B output will be produced.

VCPR $\neq$ 0 Format B output will be written on tape B9 for offline printing.

VSTPU = 0 no Format A output will be produced.

VSTPU $\neq$ 0 Format A output will be written on the system peripheral punch tape for offline punching.

Normal station observable output is independent of the use of the above options. Station names (BCD) and station locations and frequency constants can be changed by input to station tables.

FORMAT A

Card columns 2-13: 12-character name for identification of station viewing

Card columns 15-31: Date and time of event, in the following format:

Card column	Description	Example
15-16	year	62 = 1962
18-19	month	08 = August
21-22	day	24 = 24th day of month
24-25	hours	07 = 7 hours
27-28	minutes	14 = 14 minutes
30-31	seconds	51 = 51 seconds

Card column 33-37: Elevation or hour angle of probe, deg, to 1 decimal place

Card column 39-46: Elevation rate or hour-angle rate of probe, deg/sec, to 4 decimal places

Card column 48-52: Azimuth or declination of probe, deg, to 1 decimal place

Card column 54-61: Azimuth rate or declination rate of probe, deg/sec, to 4 decimal places

Card column 63-71: Range from center of Earth to probe, km, no decimal places

Card column 73-75: Chronological event count

Card column 77-78: Station identification number

For hour angle-declination stations, the hour angle and declination and their rates will be output.

For azimuth-elevation stations, the azimuth and elevation and their rates will be output.

FORMAT B

Column 2-3: Station identification number

Column 4: Letter A, B, or C, to denote whether event is a rise, maximum elevation or set, respectively.

Column 6-26: Date and time of event occurrence using following format:

Column	Description	Example
6-7	year	62 = 1962
9-10	month	10 = October
12-13	day	15 = 15th day
15-16	hours	21 = 21st hour
18-19	minutes	45 = 45th minute
21-26	seconds and milliseconds	27.389 seconds

If the station is an azimuth-elevation type station, the four quantities which follow will be:

Column 28-34: Azimuth, deg, to 2 decimal places

Column 36-47: Azimuth rate, deg/sec, in floating-point form, six digits and an exponent

Column 49-54: Elevation, deg, to 2 decimal places

Column 56-67: Elevation rate, deg/sec, in floating-point form, six digits and an exponent

If the station is an hour angle-declination type station, the quantities hour angle, hour angle rate, declination, and declination rate are printed in the preceding format, respectively.

Column 69-80: Slant range, km, in six-digit floating-point format

Column 82-93: Slant range rate, km/sec, in six-digit floating-point format

Column 95-100: Latitude of probe, deg, to 2 decimal places

Column 102-108: Longitude of probe, deg, to 2 decimal places

Column 110: H = Hour angle - declination mount station

E = Elevation - azimuth mount station

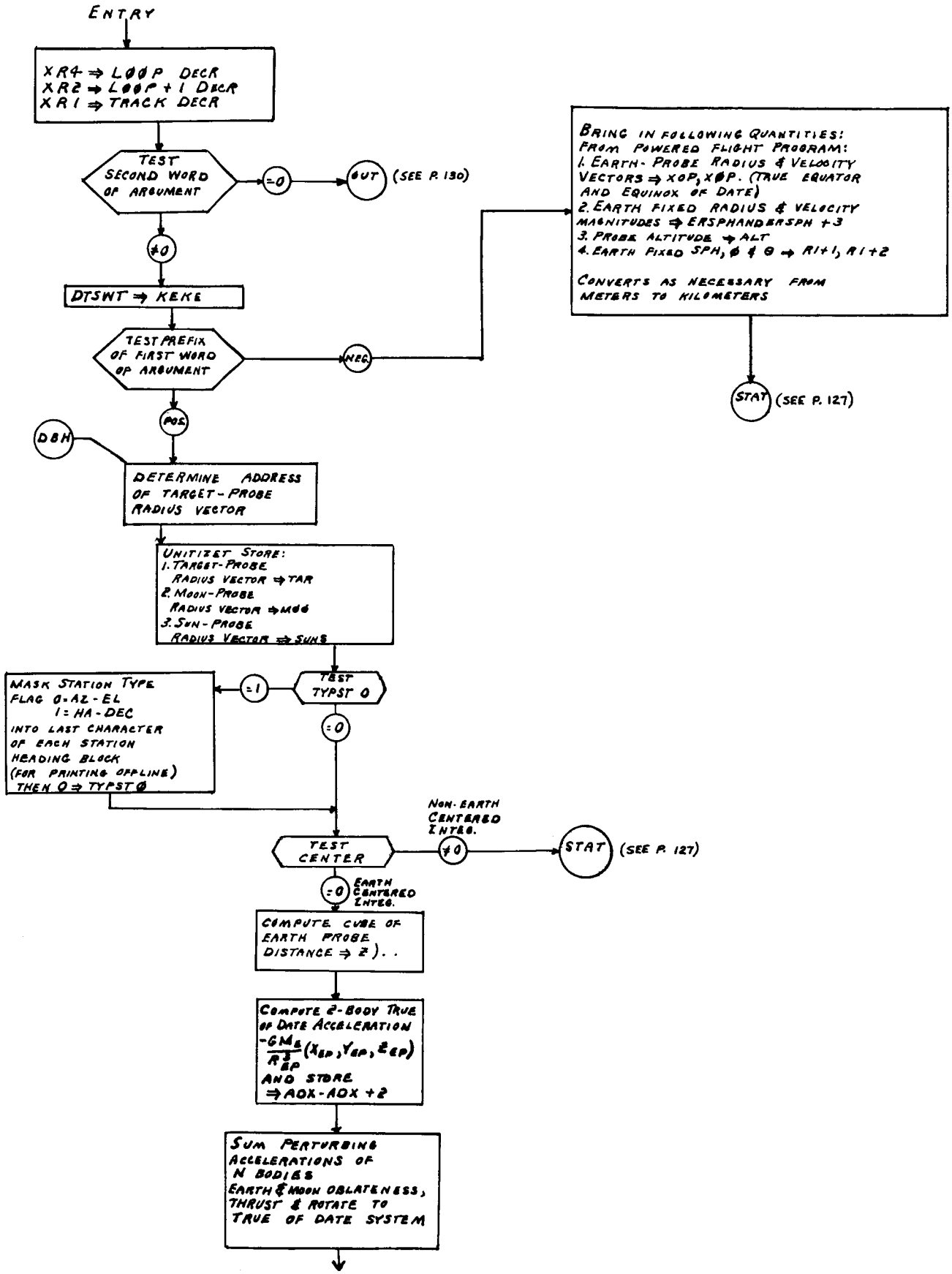
ENTRY
XR4 ⇒ LØØP DECR
XR2 ⇒ LØØP + 1 DECR
XR1 ⇒ TRACK DECR
TEST SECOND WORD OF ARGUMENT
=0
ØUT
(SEE P. 130)
≠0
DTSWT ⇒ KEKE
TEST PREFIX OF FIRST WORD OF ARGUMENT
NEG
POS
DBH
DETERMINE ADDRESS OF TARGET-PROBE RADIUS VECTOR
UNITIZET STORE:
1. TARGET-PROBE RADIUS VECTOR ⇒ TAR
2. MOON-PROBE RADIUS VECTOR ⇒ MØØ
3. SUN-PROBE RADIUS VECTOR ⇒ SUNS
TEST TYPST 0
=1
=0
MASK STATION TYPE FLAG 0=AZ-EL 1=HA-DEC INTO LAST CHARACTER OF EACH STATION HEADING BLOCK (FOR PRINTING OFFLINE) THEN 0 ⇒ TYPST Ø
TEST CENTER
NON-EARTH CENTERED INTEG.
≠0
STAT
(SEE P. 127)
=0
EARTH CENTERED INTEG.
COMPUTE CUBE OF EARTH PROBE DISTANCE ⇒ Z)..
COMPUTE 2-BODY TRUE OF DATE ACCELERATION
$-\frac{GM_E}{R^3_{EP}}(X_{EP}, Y_{EP}, Z_{EP})$
AND STORE
⇒ AOX-AOX+2
SUM PERTURBING ACCELERATIONS OF N BODIES
EARTH & MOON OBLATENESS, THRUST & ROTATE TO TRUE OF DATE SYSTEM
BRING IN FOLLOWING QUANTITIES:
FROM POWERED FLIGHT PROGRAM:
1. EARTH-PROBE RADIUS & VELOCITY VECTORS ⇒ XØP, XØP. (TRUE EQUATOR AND EQUINOX OF DATE)
2. EARTH FIXED RADIUS & VELOCITY MAGNITUDES ⇒ ERSPHANDERSPH +3
3. PROBE ALTITUDE ⇒ ALT
4. EARTH FIXED SPH, Ø & Θ ⇒ R1+1, R1+2
CONVERTS AS NECESSARY FROM METERS TO KILOMETERS
STAT
(SEE P. 127)

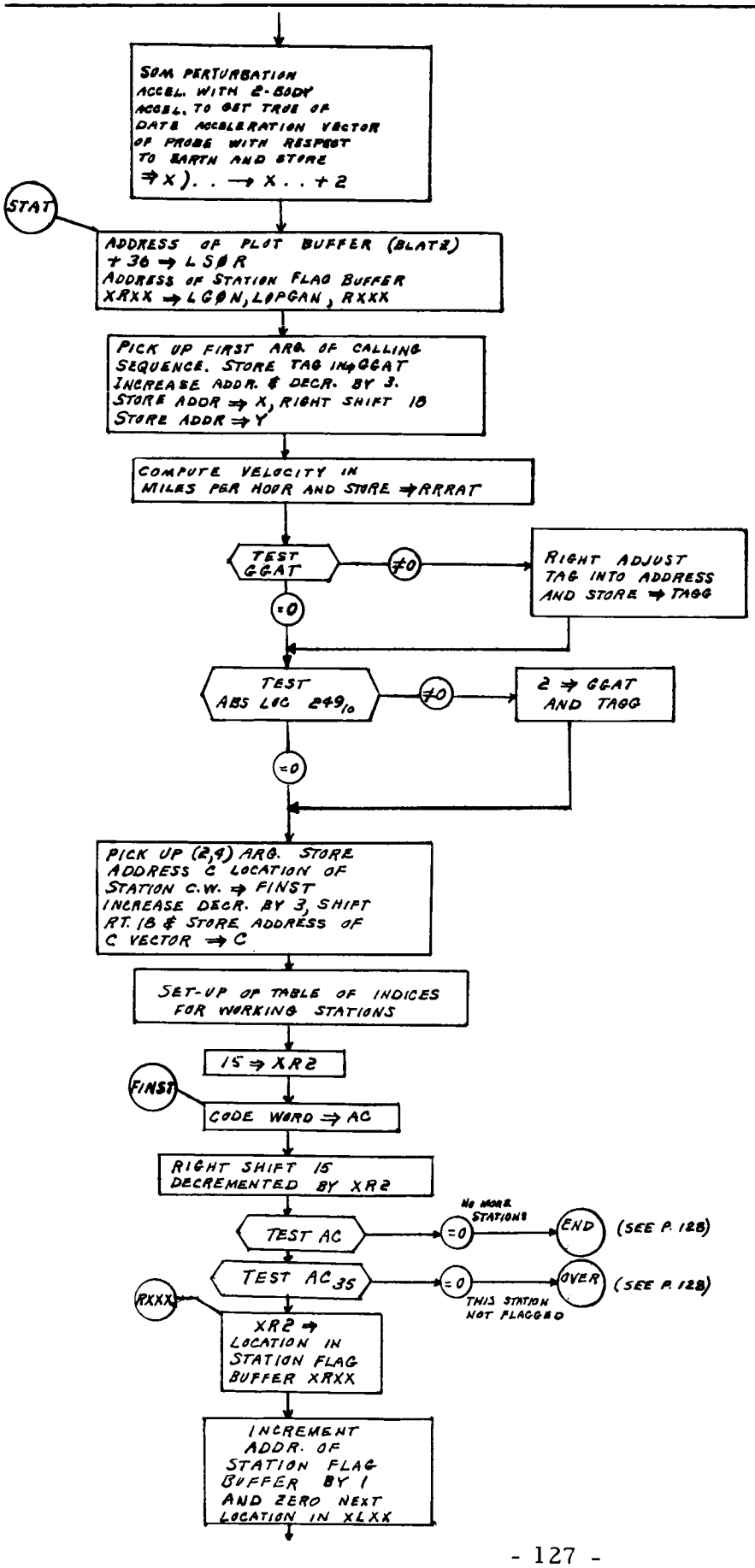
SOM PERTURBATION ACCEL. WITH 2-BODY ACCEL. TO GET TRUE OF DATE ACCELERATION VECTOR OF PROBE WITH RESPECT TO EARTH AND STORE ⇒ X). . → X. . + 2
STAT
ADDRESS OF PLOT BUFFER (BLAT2) + 36 ⇒ LSØR
ADDRESS OF STATION FLAG BUFFER XRXX ⇒ LGØN, LØPGAN, RXXX
PICK UP FIRST ARG. OF CALLING SEQUENCE. STORE TAG IN ⇒ GGAT
INCREASE ADDR. & DECR. BY 3.
STORE ADDR ⇒ X, RIGHT SHIFT 18
STORE ADDR ⇒ Y
COMPUTE VELOCITY IN MILES PER HOUR AND STORE ⇒ RRRAT
TEST GGAT
≠0
=0
RIGHT ADJUST TAG INTO ADDRESS AND STORE ⇒ TAGG
TEST ABS LOC 249₁₀
≠0
=0
2 ⇒ GGAT AND TAGG
PICK UP (2,4) ARG. STORE ADDRESS & LOCATION OF STATION C.W. ⇒ FINST
INCREASE DECR. BY 3, SHIFT RT. 18 & STORE ADDRESS OF C VECTOR ⇒ C
SET-UP OF TABLE OF INDICES FOR WORKING STATIONS
15 ⇒ XR2
FINST
CODE WORD ⇒ AC
RIGHT SHIFT 15 DECREMENTED BY XR2
TEST AC
=0
NO MORE STATIONS
END
(SEE P. 128)
TEST AC35
=0
THIS STATION NOT FLAGGED
OVER
(SEE P. 128)
RXXX
XR2 ⇒ LOCATION IN STATION FLAG BUFFER XRXX
INCREMENT ADDR. OF STATION FLAG BUFFER BY 1 AND ZERO NEXT LOCATION IN XLXX

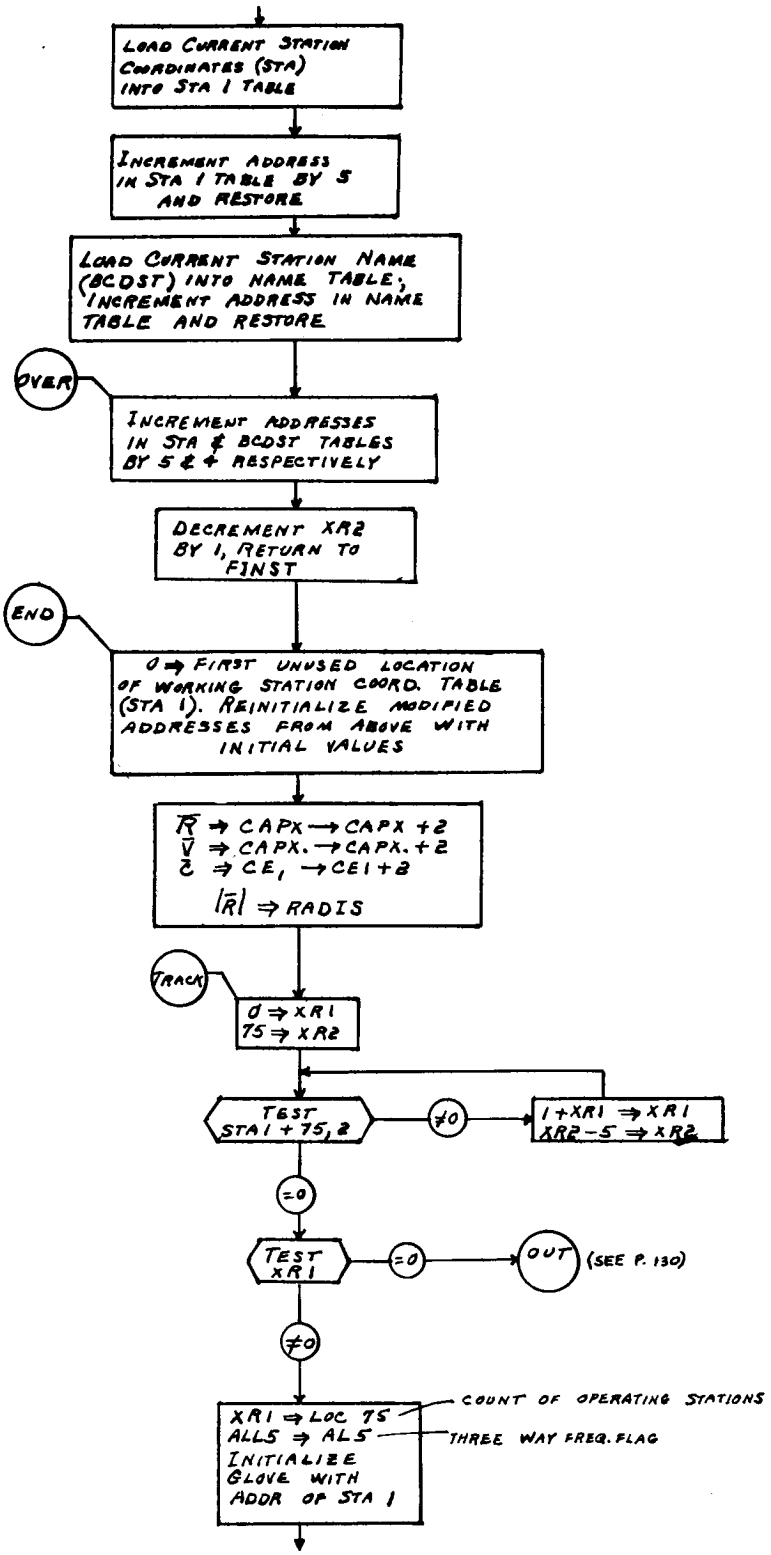
LOAD CURRENT STATION COORDINATES (STA) INTO STA 1 TABLE
INCREMENT ADDRESS IN STA 1 TABLE BY 5 AND RESTORE
LOAD CURRENT STATION NAME (BCDST) INTO NAME TABLE; INCREMENT ADDRESS IN NAME TABLE AND RESTORE
OVER
INCREMENT ADDRESSES IN STA & BCDST TABLES BY 5 & 4 RESPECTIVELY
DECREMENT XR2 BY 1, RETURN TO FINST
END
0 ⇒ FIRST UNUSED LOCATION OF WORKING STATION COORD. TABLE (STA 1). REINITIALIZE MODIFIED ADDRESSES FROM ABOVE WITH INITIAL VALUES
R̄ ⇒ CAPX → CAPX + 2
V̄ ⇒ CAPX. → CAPX. + 2
C̄ ⇒ CE1 → CE1 + 2
|R̄| ⇒ RADIS
TRACK
0 ⇒ XR1
75 ⇒ XR2
TEST STA1 + 75, 2
≠0
1 + XR1 ⇒ XR1
XR2 − 5 ⇒ XR2
=0
TEST XR1
=0
OUT
(SEE P. 130)
≠0
XR1 ⇒ LOC 75
ALL5 ⇒ AL5
INITIALIZE GLOVE WITH ADDR OF STA 1
COUNT OF OPERATING STATIONS
THREE WAY FREQ. FLAG

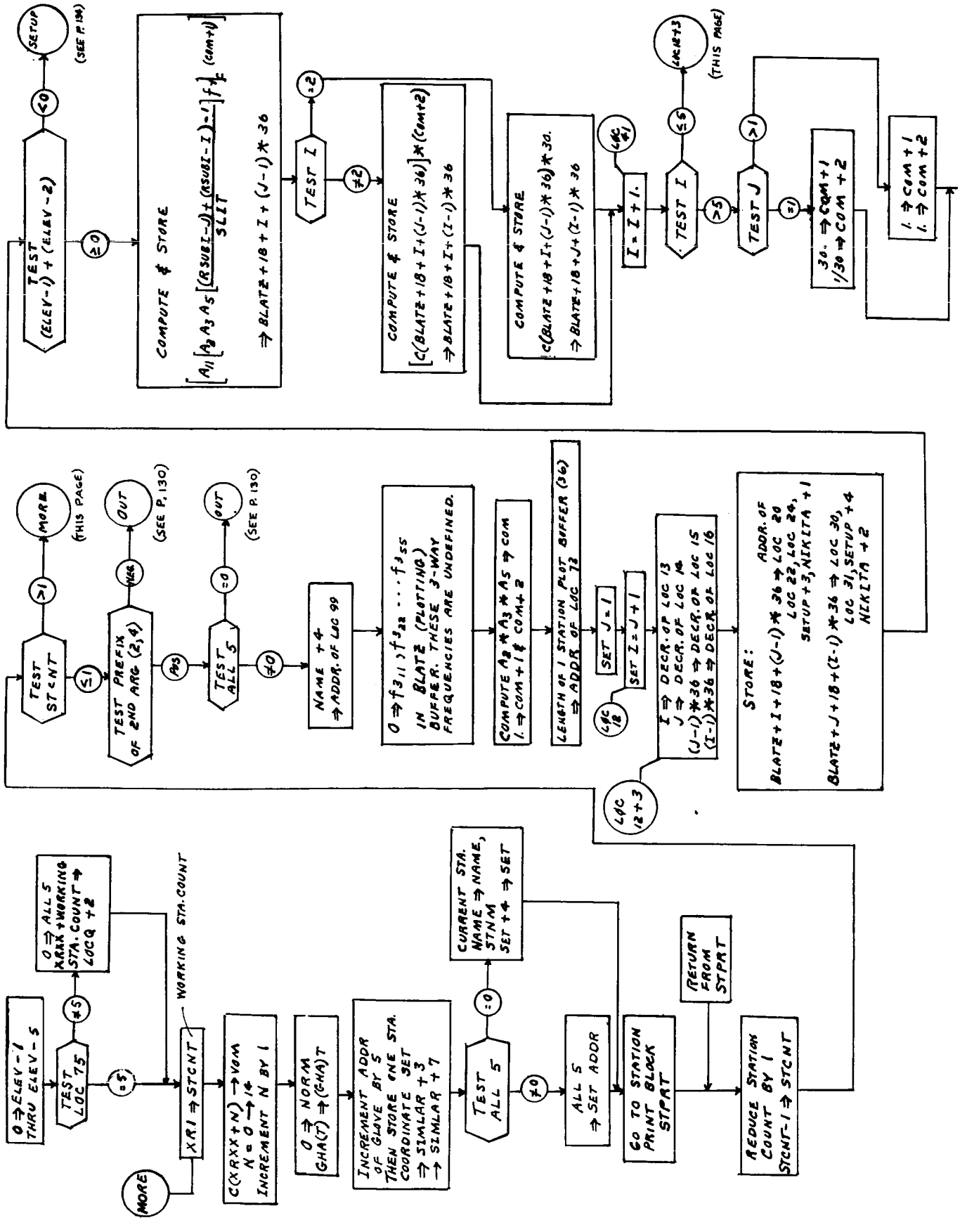
0 ⇒ ELEV-1 THRU ELEV-5
TEST LOC 75
≠5
=5
0 ⇒ ALL 5 XRXX + WORKING STA. COUNT ⇒ LOCQ + 2
WORKING STA. COUNT
MORE
XR1 ⇒ STCNT
C(XRXX+N) → VOM
N = 0 → 14
INCREMENT N BY 1
0 ⇒ NORM
GHA(T) ⇒ (GHA)T
INCREMENT ADDR OF GLOVE BY 5 THEN STORE ONE STA. COORDINATE SET ⇒ SIMLAR + 3 → SIMLAR + 7
TEST ALL 5
=0
≠0
CURRENT STA. NAME ⇒ NAME, STNM SET + 4 ⇒ SET
ALL 5 ⇒ SET ADDR
GO TO STATION PRINT BLOCK STPRT
RETURN FROM STPRT
REDUCE STATION COUNT BY 1 STCNT-1 ⇒ STCNT
TEST STCNT
≤1
>1
MORE
(THIS PAGE)
TEST PREFIX OF 2ND ARG (2,4)
NEG
OUT
(SEE P. 130)
POS
TEST ALL 5
=0
≠0
OUT
(SEE P. 130)
NAME + 4 ⇒ ADDR. OF LOC 99
0 ⇒ f311, f322 ... f355 IN BLATZ (PLOTTING) BUFFER. THESE 3-WAY FREQUENCIES ARE UNDEFINED.
COMPUTE A2 * A3 * A5 ⇒ COM
1. ⇒ COM + 1 & COM + 2
LENGTH OF 1 STATION PLOT BUFFER (36) ⇒ ADDR. OF LOC 72
SET J = 1
LOC 12
SET I = J + 1
I ⇒ DECR. OF LOC 13
J ⇒ DECR. OF LOC 14
(J-1) * 36 ⇒ DECR. OF LOC 15
(I-1) * 36 ⇒ DECR. OF LOC 16
LOC 12+3
STORE:
ADDR. OF
BLATZ + I + 18 + (J-1) * 36 ⇒ LOC 20
LOC 22, LOC 24,
SETUP + 3, NIKITA + 1
BLATZ + J + 18 + (I-1) * 36 ⇒ LOC 30,
LOC 31, SETUP + 4
NIKITA + 2
TEST (ELEV-1) + (ELEV-2)
<0
≥0
SETUP
(SEE P. 134)
COMPUTE & STORE
[A11 [A2 A3 A5 [(RSUBI-J) + (RSUBI-I) - 1] / SLIT] f f (COM+1)]
⇒ BLATZ + 18 + I + (J-1) * 36
TEST I
=2
≠2
COMPUTE & STORE
[C(BLATZ + 18 + I + (J-1) * 36)] * (COM+2)
⇒ BLATZ + 18 + I + (I-1) * 36
COMPUTE & STORE
C(BLATZ + 18 + I + (J-1) * 36) * 30.
⇒ BLATZ + 18 + J + (I-1) * 36
LOC 41
I = I + 1.
TEST I
≤5
>5
LOC 12+3
(THIS PAGE)
TEST J
>1
=1
30. ⇒ COM + 1
1/30 ⇒ COM + 2
1. ⇒ COM + 1
1. ⇒ COM + 2

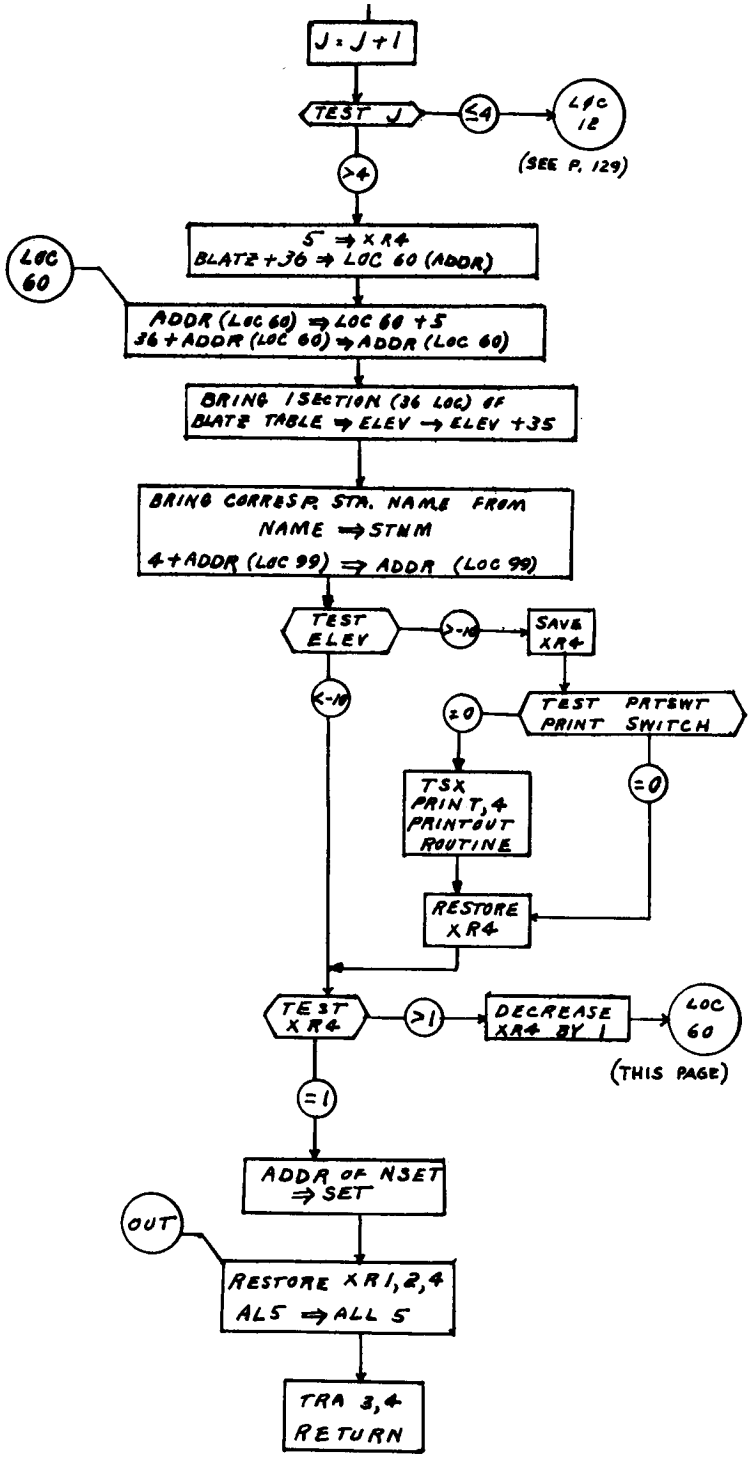
J = J + 1
TEST J
≤4
LOC 12
(SEE P. 129)
>4
5 ⇒ XR4
BLATZ + 36 ⇒ LOC 60 (ADDR)
LOC 60
ADDR (LOC 60) ⇒ LOC 60 + 5
36 + ADDR (LOC 60) ⇒ ADDR (LOC 60)
BRING 1 SECTION (36 LOC) OF BLATZ TABLE ⇒ ELEV → ELEV + 35
BRING CORRESP. STA. NAME FROM NAME ⇒ STNM
4 + ADDR (LOC 99) ⇒ ADDR (LOC 99)
TEST ELEV
>-10
SAVE XR4
<-10
≠0
TEST PATSWT PRINT SWITCH
TSX PRINT, 4 PRINTOUT ROUTINE
=0
RESTORE XR4
TEST XR4
>1
DECREASE XR4 BY 1
LOC 60
(THIS PAGE)
=1
ADDR OF NSET ⇒ SET
OUT
RESTORE XR1,2,4
AL5 ⇒ ALL 5
TRA 3,4
RETURN

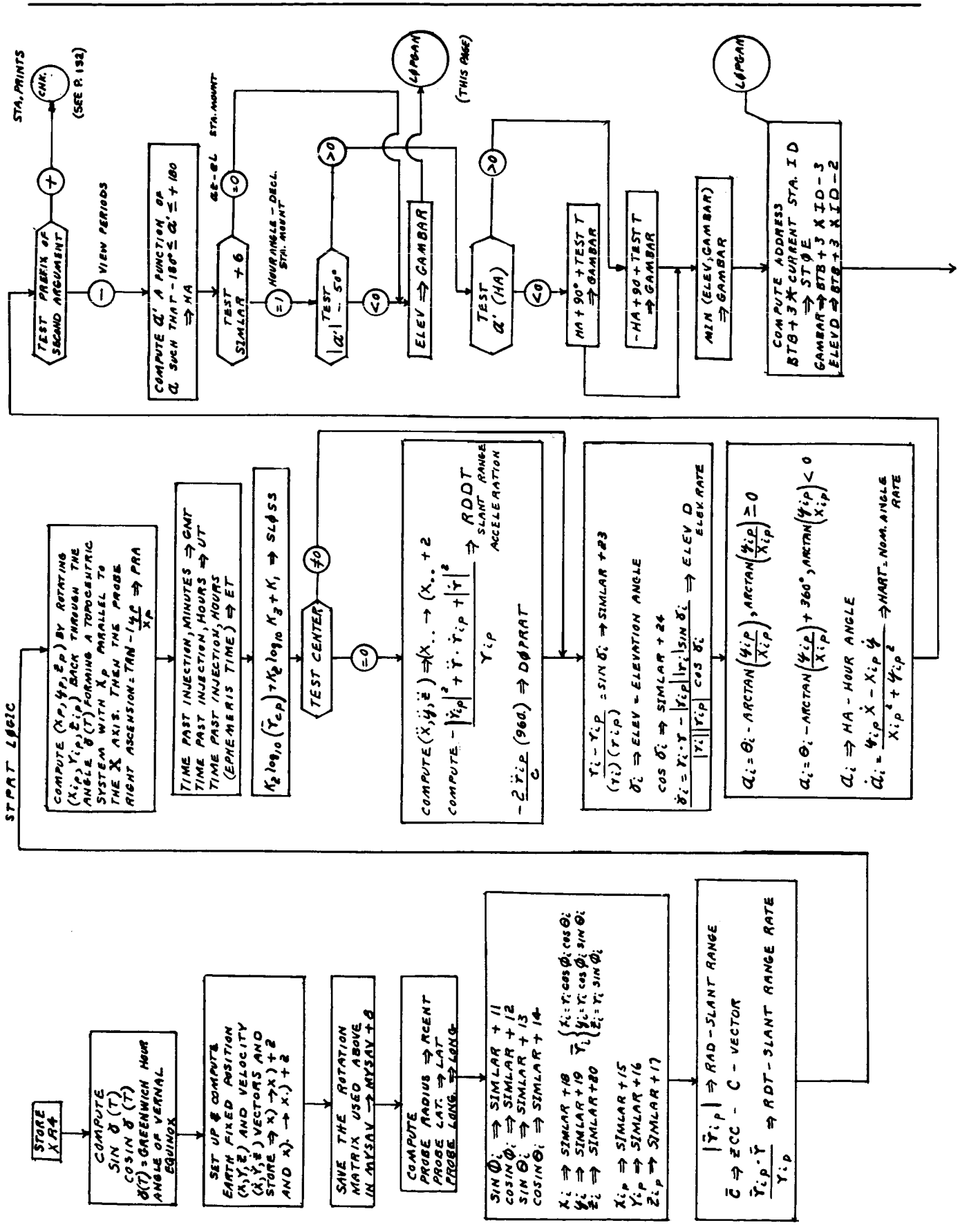
STORE XR4
COMPUTE SIN δ (T) COSIN δ (T) δ(T) = GREENWICH HOUR ANGLE OF VERNAL EQUINOX
SET UP & COMPUTE EARTH FIXED POSITION (X,Y,Z) AND VELOCITY (Ẋ,Ẏ,Ż) VECTORS AND STORE ⇒ X) → X) + 2 AND X). → X.) + 2
SAVE THE ROTATION MATRIX USED ABOVE IN MYSAV → MYSAV + 8
COMPUTE PROBE RADIUS ⇒ RCENT PROBE LAT. ⇒ LAT PROBE LONG. ⇒ LONG
SIN Φi ⇒ SIMLAR + 11
COSIN Φi ⇒ SIMLAR + 12
SIN Θi ⇒ SIMLAR + 13
COSIN Θi ⇒ SIMLAR + 14
Xi ⇒ SIMLAR + 18
Yi ⇒ SIMLAR + 19
Zi ⇒ SIMLAR + 20
Xi = ri cos Φi cos Θi
Yi = ri cos Φi sin Θi
Zi = ri sin Φi
Xip ⇒ SIMLAR + 15
Yip ⇒ SIMLAR + 16
Zip ⇒ SIMLAR + 17
|r̄ip| ⇒ RAD - SLANT RANGE
C̄ ⇒ ZCC - C - VECTOR
r̄ip · r̄ / rip ⇒ RDT - SLANT RANGE RATE
STPRT LØGIC
COMPUTE (Xp, Yp, Zp) BY ROTATING (Xip, Yip, Zip) BACK THROUGH THE ANGLE δ(T) FORMING A TOPOCENTRIC SYSTEM WITH Xp PARALLEL TO THE X AXIS. THEN THE PROBE RIGHT ASCENSION = TAN⁻¹ Yp/Xp ⇒ PRA
TIME PAST INJECTION, MINUTES ⇒ GMT
TIME PAST INJECTION, HOURS ⇒ UT
TIME PAST INJECTION, HOURS (EPHEMERIS TIME) ⇒ ET
K2 log10 (r̄cp) + K2 log10 K3 + K1 ⇒ SLØSS
TEST CENTER
≠0
=0
COMPUTE (Ẍ, Ÿ, Z̈) ⇒ (X.. → (X.. + 2
COMPUTE − |ṙip|² + r̈ · ṙip + |ṙ|² / rip ⇒ RDDT SLANT RANGE ACCELERATION
− 2 r̈ip / c (960) ⇒ DØPRAT
(ri − rip) / (ri)(rip) = SIN δi ⇒ SIMLAR + 23
δi ⇒ ELEV = ELEVATION ANGLE
COS δi ⇒ SIMLAR + 24
ṙi = ri · r − |rip||ri| sin δi / |ri||rip| cos δi ⇒ ELEV D ELEV. RATE
ai = θi − ARCTAN(Yip/Xip), ARCTAN(Yip/Xip) ≥ 0
ai = θi − ARCTAN(Yip/Xip) + 360°, ARCTAN(Yip/Xip) < 0
ai ⇒ HA - HOUR ANGLE
ȧi = Yip Ẋ − Xip Ẏ / (Xip² + Yip²) ⇒ HART = NOM. ANGLE RATE
TEST PREFIX OF SECOND ARGUMENT
+
STA. PRINTS
CHK.
(SEE P. 132)
− VIEW PERIODS
COMPUTE a' A FUNCTION OF a SUCH THAT −180° ≤ a' ≤ +180 ⇒ HA
TEST SIMLAR + 6
=0
GZ-EL STA. MOUNT
=1
HOUR ANGLE - DECL. STA. MOUNT
|a'| TEST − 50°
>0
<0
ELEV ⇒ GAMBAR
LØPGAN
(THIS PAGE)
TEST a' (HA)
>0
<0
HA + 90° + TEST T ⇒ GAMBAR
−HA + 90 + TEST T ⇒ GAMBAR
MIN (ELEV, GAMBAR) ⇒ GAMBAR
COMPUTE ADDRESS BTB + 3 * CURRENT STA. ID ⇒ STØE
GAMBAR ⇒ BTB + 3 X ID − 3
ELEV D ⇒ BTB + 3 X ID − 2
LØPGAN

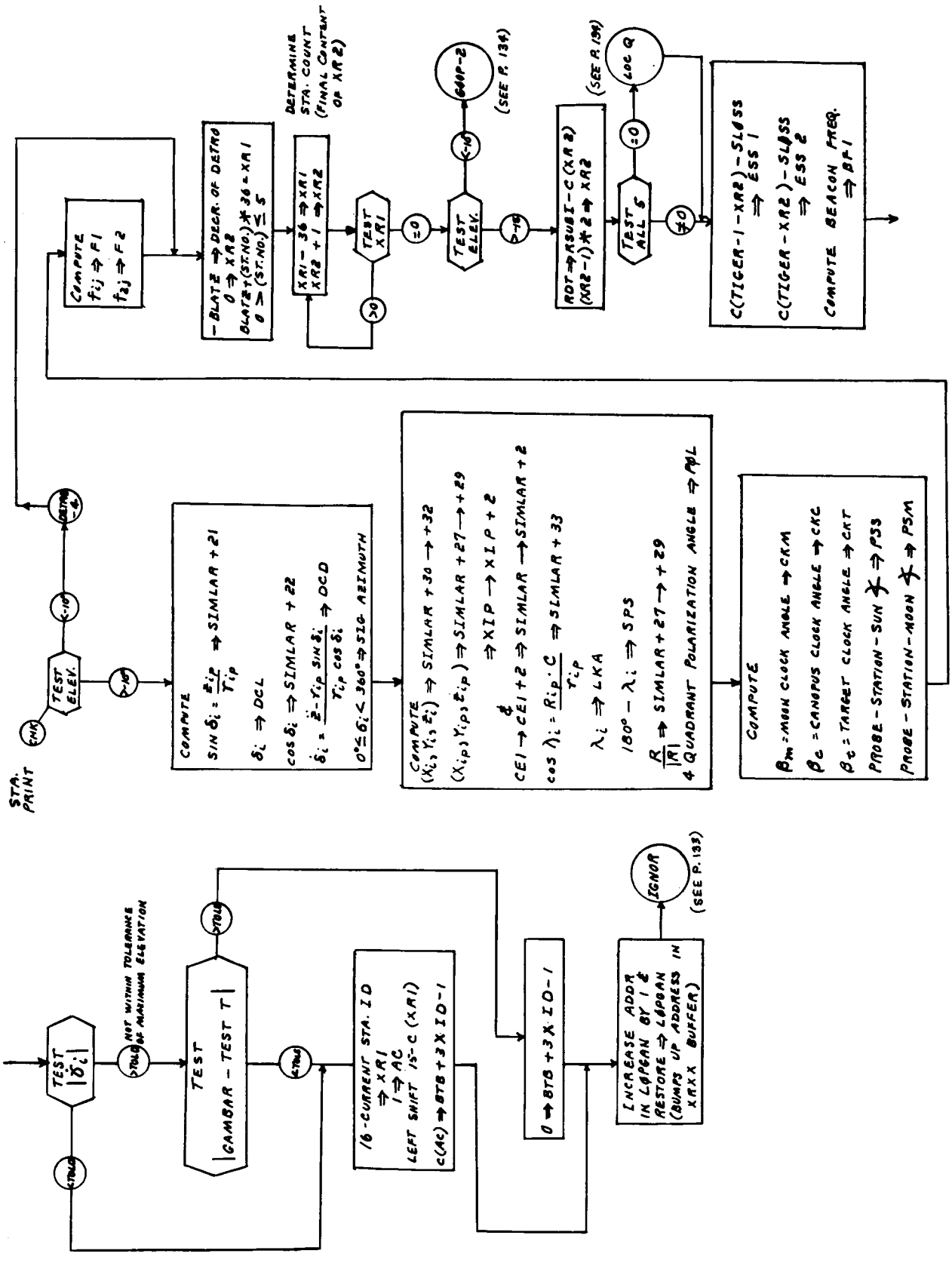
STA. PRINT
CHK
TEST ELEV.
<-10°
>-10°
DETRO -4
COMPUTE
SIN δi = Zip / Rip ⇒ SIMLAR + 21
δi ⇒ DCL
cos δi ⇒ SIMLAR + 22
δ̇i = (Ż - Rip SIN δi) / Rip cos δi ⇒ DCD
0° ≤ δi < 360° ⇒ SIG AZIMUTH
COMPUTE
(Xi, Yi, Zi) ⇒ SIMLAR + 30 → + 32
(Xip, Yip, Zip) ⇒ SIMLAR + 27 → + 29
⇒ XIP → XIP + 2
&
CE1 → CE1 + 2 ⇒ SIMLAR → SIMLAR + 2
cos λi = Rip · C / Rip ⇒ SIMLAR + 33
λi ⇒ LKA
180° − λi ⇒ SPS
R / |R| ⇒ SIMLAR + 27 → + 29
4 QUADRANT POLARIZATION ANGLE ⇒ PØL
COMPUTE
βm = MOON CLOCK ANGLE ⇒ CKM
βc = CANOPUS CLOCK ANGLE ⇒ CKC
βt = TARGET CLOCK ANGLE ⇒ CKT
PROBE - STATION - SUN ∡ ⇒ PSS
PROBE - STATION - MOON ∡ ⇒ PSM
COMPUTE
fij ⇒ F1
f2j ⇒ F2
− BLATZ ⇒ DECR. OF DETRO
0 ⇒ XR2
BLATZ + (ST. NO.) * 36 = XR1
0 > (ST. NO.) ≤ 5
DETERMINE STA. COUNT (FINAL CONTENT OF XR2)
XR1 − 36 ⇒ XR1
XR2 + 1 ⇒ XR2
TEST XR1
>0
=0
TEST ELEV.
<-10
GOOP-2
(SEE P. 134)
>-10
RDT ⇒ RSUBI − C (XR2)
(XR2 − 1) * 2 ⇒ XR2
(SEE P. 134)
TEST ALL 5
=0
LOC Q
≠0
C(TIGER-1 − XR2) − SLØSS ⇒ ESS 1
C(TIGER − XR2) − SLØSS ⇒ ESS 2
COMPUTE BEACON FREQ. ⇒ BF1
TEST |δ̇i|
<TOLD
>TOLD
NOT WITHIN TOLERANCE OF MAXIMUM ELEVATION
TEST |GAMBAR − TEST T|
<TOLD
>TOLD
16-CURRENT STA. ID ⇒ XR1
1 ⇒ AC
LEFT SHIFT 15-C (XR1)
C(AC) ⇒ BTB + 3 X ID − 1
0 ⇒ BTB + 3 X ID − 1
INCREASE ADDR IN LØPGAN BY 1 & RESTORE ⇒ LØPGAN (BUMPS UP ADDRESS IN XRXX BUFFER)
IGNOR
(SEE P. 133)

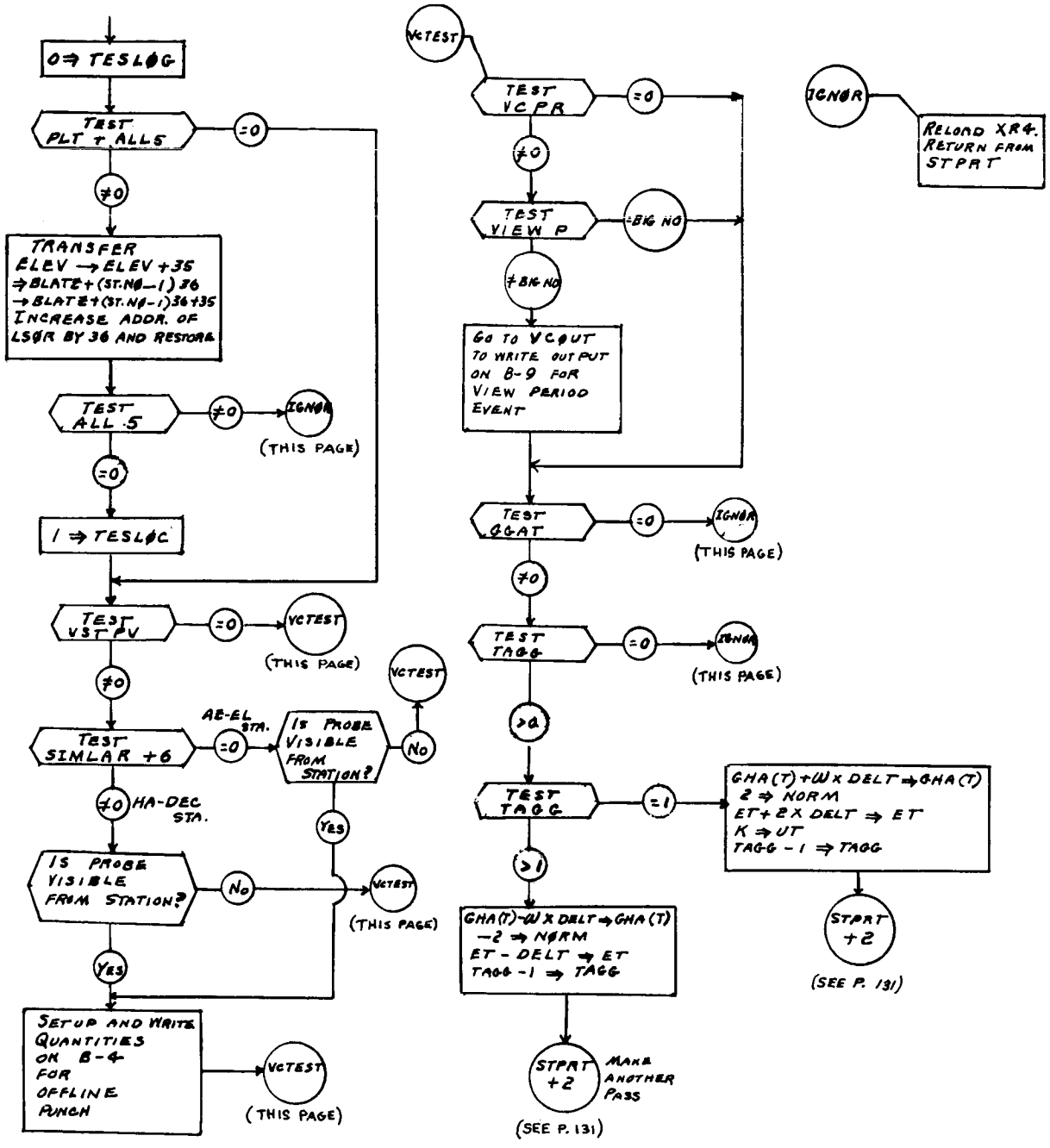
0 ⇒ TESLØG
TEST PLT + ALLS
=0
≠0
TRANSFER ELEV → ELEV + 35 ⇒ BLATE + (ST.NØ − 1) 36 → BLATE + (ST.NØ − 1) 36 + 35 INCREASE ADDR. OF LSØR BY 36 AND RESTORE
TEST ALL 5
≠0
IGNØR
(THIS PAGE)
=0
1 ⇒ TESLØC
TEST VST PV
=0
VCTEST
(THIS PAGE)
≠0
TEST SIMLAR +6
AZ-EL STA.
=0
IS PROBE VISIBLE FROM STATION?
No
VCTEST
Yes
≠0 HA-DEC STA.
IS PROBE VISIBLE FROM STATION?
No
VCTEST
(THIS PAGE)
Yes
SETUP AND WRITE QUANTITIES ON B-4 FOR OFFLINE PUNCH
VCTEST
(THIS PAGE)
VCTEST
TEST VC PR
=0
≠0
TEST VIEW P
=BIG NO
≠BIG NO
GO TO VCØUT TO WRITE OUTPUT ON B-9 FOR VIEW PERIOD EVENT
TEST ØGAT
=0
IGNØR
(THIS PAGE)
≠0
TEST TAGG
=0
IGNØR
(THIS PAGE)
>0
TEST TAGG
=1
GHA(T) + ω × DELT ⇒ GHA(T)
2 ⇒ NORM
ET + 2 × DELT ⇒ ET
K ⇒ UT
TAGG − 1 ⇒ TAGG
STPRT +2
(SEE P. 131)
>1
GHA(T) − ω × DELT ⇒ GHA(T)
−2 ⇒ NØRM
ET − DELT ⇒ ET
TAGG − 1 ⇒ TAGG
STPRT +2
MAKE ANOTHER PASS
(SEE P. 131)
IGNØR
RELOAD XR4. RETURN FROM STPRT

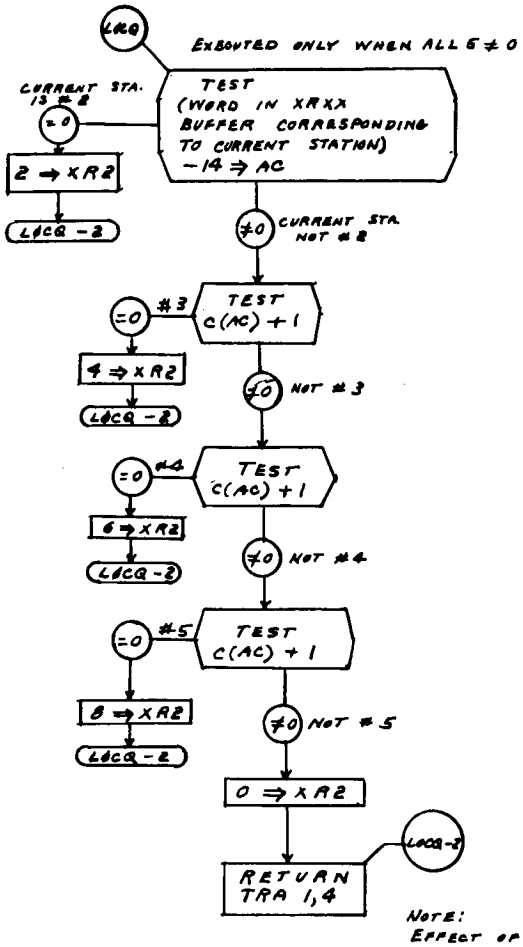

NOTE:
EFFECT OF CODING AT LØCQ IS TO USE THE OUTPUT SIGNAL STRENGTH FOR DSIF STA. #1 IF ANY OF THE FIVE STATIONS USED UNDER THE ALL ≠ 0 OPTION IS NOT A DSIF STA.

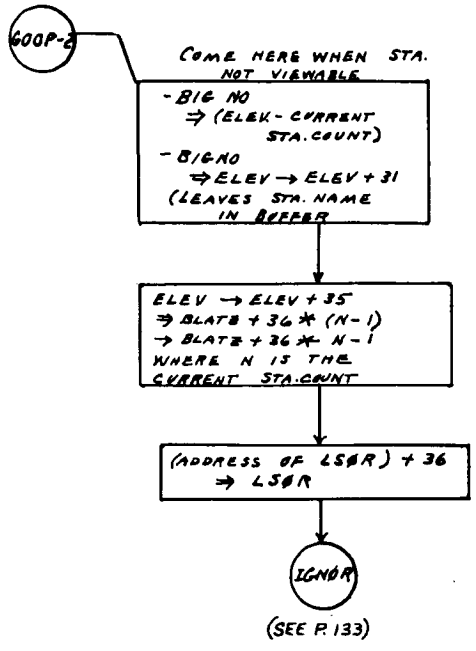

(SEE P. 133)

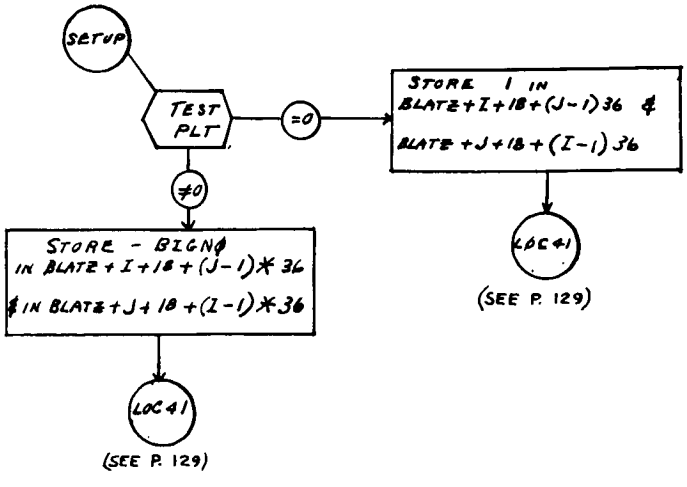

(SEE P. 129)

(SEE P. 129)

2. ANTR

Identification

ANTR or ANTR1/Mariner R ephemeris interpolation subroutine for ephemeris tape including Saturn and covering the period from 1950 to 1980.

Purpose

To obtain positions and velocities of the Sun, the Moon, and the necessary planets as determined by and referenced to the central body of the JPL Space Trajectory Program. The coordinates are obtained as a function of time by a sixth-order Everett's interpolation of ephemeris values stored on magnetic tape.

Method

A sixth-order Everett's interpolation is performed to obtain the positions and velocities of planets and the Moon as determined by the central body control word. Positions are found by direct interpolation, except in the case of the Earth, where the necessary second and fourth differences are obtained from the records on the magnetic tape as well as equally spaced position values around the time point. Velocities are obtained in three ways:

1. The velocity of Venus is obtained by direct interpolation on the given velocity ephemeris, with second and fourth differences of the velocity of Venus obtained from the tape records.
2. The geocentric coordinates of the Sun are obtained from the formulas:

$$\overline{R}_{\oplus\odot} = -\overline{R}_{\odot\oplus} + \mu\overline{R}_{\oplus☾}$$

$$\overline{V}_{\oplus\odot} = -\overline{V}_{\odot\oplus} + \mu V_{\oplus☾}$$

where

$$\mu = \frac{\mu_{☾}}{\mu_{\oplus} + \mu_{☾}}$$

$\mu_{☾}$ = gravitational coefficient of the Moon

$\mu_{\oplus}$ = gravitational coefficient of the Earth

$\overline{R}_{\odot\oplus}$, $\overline{V}_{\odot\oplus}$ are the heliocentric coordinates of the Earth-Moon barycenter obtained by direct interpolation.

$\overline{R}_{\oplus☾}$, $\overline{V}_{\oplus☾}$ are the geocentric coordinates of the Moon obtained by interpolation directly for the position and by numerical differentiation and interpolation for the velocity.

3. The remaining velocities are obtained by numerical differentiation and interpolation using the positions, and the second and fourth differences from the tape record.

The coordinates on the ephemeris tape are in terms of the AU for positions and AU per day for tabulated velocities except for the Moon which has positions given in Earth radii. The subroutine scales all the position vectors from the tape record before interpolation to kilometers to obtain interpolated positions in kilometers. All numerically differentiated velocities are obtained in kilometers per second by adjustment of the Everett's coefficients.

The velocity of Venus and the Earth-Moon barycenter are scaled so that the interpolated values have the units in kilometers per day and are adjusted to kilometers per second after interpolation.

Tape Format

The magnetic tape containing the ephemeris consists of twenty-day records containing the position along with the second and fourth differences for the Moon at one day intervals; the position of Venus, Mars, Earth-Moon barycenter, Jupiter and Saturn together with their second and fourth differences at four-day intervals; and velocities with second and fourth differences for the Earth-Moon barycenter and Venus at the four-day interval. All information on the tape is considered by the subroutine to be binary floating-point numbers, except the check sum at the end of each record. All coordinates are referred to the mean equator and equinox of 1950.0.

The format of the tape is as follows:

d (integer days past 0^h January 1, 1950; Ephemeris Time)

$$X_{☾}^{(0)},\ \delta_0^2 X_{☾},\ \delta_0^4 X_{☾},\qquad Y_{☾}^{(0)},\ \delta_0^2 Y_{☾},\ \delta_0^4 Y_{☾},\qquad Z_{☾}^{(0)},\ \delta_0^2 Z_{☾},\ \delta_0^4 Z_{☾}$$

$$\vdots \qquad\qquad \vdots \qquad\qquad \vdots$$

$$X_{☾}^{(20)},\ \delta_{20}^2 X_{☾},\ \delta_{20}^4 X_{☾},\qquad Y_{☾}^{(20)},\ \delta_{20}^2 Y_{☾},\ \delta_{20}^4 Y_{☾},\qquad Z_{☾}^{(20)},\ \delta_{20}^2 Z_{☾},\ \delta_{20}^4 Z_{☾}$$

(21 tabular dates, nine quantities per date)

$\dot{X}^{(0)}_{\oplus}$,	$\delta^2_0\dot{X}_{\oplus}$,	$\delta^4_0\dot{X}_{\oplus}$,	$\dot{Y}^{(0)}_{\oplus}$,	$\delta^2_0\dot{Y}_{\oplus}$,	$\delta^4_0\dot{Y}_{\oplus}$,	$\dot{Z}^{(0)}_{\oplus}$,	$\delta^2_0\dot{Z}_{\oplus}$,	$\delta^4_0\dot{Z}_{\oplus}$
$\dot{X}^{(0)}_{♀}$			.	.	.			$\delta^4_0\dot{Z}_{♀}$
$X^{(0)}_{♀}$			.	.	.			$\delta^4_0 Z_{♀}$
$X^{(0)}_{♂}$			.	.	.			$\delta^4_0 Z_{♂}$
$X^{(0)}_{\oplus}$			.	.	.			$\delta^4_0 Z_{\oplus}$
$X^{(0)}_{♃}$			.	.	.			$\delta^4_0 Z_{♃}$
$X^{(0)}_{♄}$			.	.	.			$\delta^4_0 Z_{♄}$
$\dot{X}^{5}_{\oplus}$			.	⋮	.			$\delta^4_5\dot{Z}_{\oplus}$
$X^{5}_{♄}$			.	.	.			$\delta^4_5 Z_{♄}$

(six tabular dates, 63 quantities per date)

Check sum of all previous values

(The last set of values are the heliocentric values in order of the Earth-Moon barycentric velocity, velocity of Venus, position of Venus, position of Mars, Earth-Moon barycentric position, position of Jupiter, and position of Saturn. There are six sets, one for each of six dates, at intervals of four days.)

The length of the record is therefore

1	for d
189	= 9 x 21 for geocentric information
378	= 9 x 7 x 6 for heliocentric information
1	= check sum
569	words

The tape spans the E. T. epochs 0^h January 11, 1950, to 0^h July 27, 1981; attempts to interpolate outside this interval will result in an error message being printed and the FORTRAN monitor routine EXIT will be called. Failure to read tape properly will also result in the error procedure.

Usage

There are two entries to the subroutine, one to obtain positions only (ANTR) referenced to the central body and one to obtain positions and velocities of all bodies referenced to the central body (ANTR1). Given any central body all other bodies can be interpolated.

The address part of the cell CENTER must contain the fixed-point integer designating the central body.

Center	Body
0	Earth
1	Moon
2	Sun
3	Venus
4	Mars
5	(not available)
6	Jupiter

It is also assumed that the time in double-precision floating-point seconds past 0^h January 1, 1950 (Universal Time), is in the cells T, T+1 before entry to the subroutine. The cells KBO to KBO + 6 are used for the effective gravitational coefficients as a function of the central body. Values of the gravitational coefficients are available in this table after interpolation in the following order:

KBO	Earth's gravitational constant
KBO+1	Moon's gravitational constant
KBO+2	Sun's gravitational constant
KBO+3	Venus' gravitational constant
KBO+4	Mars' gravitational constant
KBO+5	Saturn's gravitational constant
KBO+6	Jupiter's gravitational constant

The cell of this table that corresponds to the central body will be zero. The interpolated floating-point values of the coordinates are placed by either entry into a buffer called XN for positions and XN. for velocities. The arrangement is as follows:

XN+ 0		XN. + 0
+ 1	Earth	+ 1
+ 2		+ 2
+ 3		+ 3
+ 4	Moon	+ 4
+ 5		+ 5
+ 6		+ 6
+ 7	Sun	+ 7
+ 8		+ 8
+ 9		+ 9
+10	Venus	+10
+11		+11
+12		+12
+13	Mars	+13
+14		+14
+15		+15
+16	Saturn	+16
+17		+17
+18		+18
+19	Jupiter	+19
+20		+20

Calling sequence

CALL ANTR normal return	(positions only referenced to central body)
CALL ANTR1 normal return	(positions and velocities for all bodies referenced to central body)

3. SRCH

Purpose

To obtain a set of F_i's by linear methods and iteration which will be within an ϵ-neighborhood of a set of Y_i's. Stated mathematically the problem is: given a vector $\overline{Y}$, find a vector $\overline{F}$, each element of which is a function of another vector space $(x_1, x_2 \cdots x_n)$ such that

$$\left| F_i(x_1, x_2 \cdots x_n) - Y_i \right| \leq \epsilon_i \qquad i = 1, 2 \cdots N$$

Method

A standard Newton-Raphson method is employed to obtain the correction vector $\Delta\overline{X} = (\delta x_1, \delta x_2 \cdots \delta x_n)$ from the equation

$$A\Delta\overline{X} = \Delta\overline{Y}$$

where A is a matrix of partial derivatives obtained numerically by perturbing the x_i's and $\Delta\overline{Y}$ is a vector of differences between the Y_i's desired and the F_i's obtained. After each evaluation of the F_i's convergence (i.e., $\left|F_i - Y_i\right| \leq \epsilon_i$) is checked. If convergence has not been reached by the time it is possible to solve for the $\Delta\overline{X}$ vector, it is solved for. The A matrix can be retained or recomputed over the course of running the number of iterations requested.

Usage

Calling sequence:

Location	Instruction
A	CALL SRCH
A+1	PZE V, T, N
A+2	PZE EVAL, TAG, CTR
A+3	ERROR RETURN
A+4	NORMAL RETURN

Explanation of Terms

V is the location of a storage buffer of length $9N + 2N^2$ words. This buffer is divided into several tables.

The first table is of length N and is located from V to V + N-1 inclusive. It contains:

Location	Address	Tag	Decrement
V	$L(x_1)$	0	$L(F_1)$
V + 1	$L(x_2)$	0	$L(F_2)$
.			
.			
.			
V + N - 1	$L(x_n)$	0	$L(F_n)$

The second table is of length N and is located from V + N to V + 2N - 1 inclusive. It contains the values of the Y_i's wanted in the following order:

Location	Contents
V + N	Y_1
V + N + 1	Y_2
.	.
.	.
.	.
V + 2N - 1	Y_n

The third table contains the amount that the x_i's will be perturbed by (this table is supplied at the user's option). It is N words long and is located from V + 2N to V + 3N - 1 inclusive. It is in the following order:

Location	Contents
V + 2N	ρ_1
V + 2N + 1	ρ_2
.	.
.	.
.	.
V + 3N - 1	ρ_n

where the ρ_i $i = 1, 2 \ldots N$ are the amounts to perturb the x_i's by, and are also the denominator of the numerical partial derivatives in the A matrix.

The fourth table contains the ϵ_i's that define the neighborhood of convergence (this table is supplied at the user's option). It is N words long and is located from V + 3N to V + 4N - 1 inclusive. It is in the following order:

Location	Contents
V + 3N	ϵ_1
V + 3N + 1	ϵ_2
.	.
.	.
.	.
V + 4N - 1	ϵ_n

The storage from V + 4N to V + 9N + $2N^2$-1 is used by the program for working and permanent storage. It is broken down as follows:

1. Storage from V + 4N to V + 5N - 1 inclusive is used for the solution of the simultaneous equations.
2. Storage from V + 5N to V + 6N + N^2 - 1 inclusive is used for the storage of the augmented matrix of partial derivatives and is destroyed in the solution of the simultaneous equations.
3. Storage from V + 6N + N^2 to V + 7N + N^2 - 1 inclusive is used to store the original x_i's and is kept intact during one iteration.
4. Storage from V + 7N + N^2 to V + 8N + N^2 - 1 inclusive is used to store the first values of the F_i's for each iteration.
5. Storage from V + 8N + N^2 to V + 9N + $2N^2$ - 1 is used to store the augmented matrix of partial derivatives and is kept intact in the event the user calls for the option to not recompute this matrix over iterations.

T is a control which determines if the subroutine will assume that the user has loaded the ρ_i's and/or ϵ_i's into the V bank or not.

If T = 0 then ρ_i's and ϵ_i's are given
= 1 then ϵ_i's are given, ρ_i's not given
= 2 then ρ_i's are given, ϵ_i's not given
= 3 then neither ρ_i's nor ϵ_i's are given

If the T = 1 or 3 then the subroutine sets the ρ_i's to λx_i, where $\lambda = 0.0001$ and is located at SRCH + 4.

If the T = 2 or 3 then the subroutine sets the ϵ_i's to β, where $\beta = 1.0 \times 10^{-6}$ and is located at SRCH + 5.

N is the number of x_i's to solve for simultaneously.

EVAL is the location of a user subroutine which evaluates and stores the F_i's in the locations defined in the first table. EVAL's calling sequence must be:

CALL EVAL

Normal return

TAG is a control which allows the user to recompute the matrix of partials for each iteration or compute it on the first iteration only.

If TAG = 0 then the matrix of partial derivatives is recomputed on each iteration

= 1 then the matrix of partial derivatives is computed on the first iteration only and reused for each succeeding iteration.

CTR is an integer which determines the number of iterations to try for to reach convergence.

ERROR RETURN is the location to which the subroutine returns if the specified number of iterations, CTR, has been reached without converging.

NORMAL RETURN is the location to which the subroutine returns if convergence has been reached within CTR iterations. The desired values of the x_i's will be stored in the locations specified by the locations in the first table in the V bank.

Storage

The subroutine requires 484 words of memory. In addition 8 words of COMMON are required. The subroutine includes a simultaneous equation solver routine.

Programmer Notes

The criterion for convergence when the ϵ_i's are not given is

$$\left| \frac{F_i - Y_i}{Y_i} \right| \leq 10^{-1} \qquad i = 1, 2, \cdots N$$

Therefore, if any of the Y_i's are zero all ϵ_i's must be supplied.

APPENDIX C. MONITOR MAIN PROGRAM (TPWRT), ONE-CARD LOADER, AND THREE-CARD LOADER

The three programs whose assemblies are given in this Section are included to allow the reader a fuller understanding of the methods used in the Trajectory Monitor System. The first of the three assemblies is the main program in the FORTRAN sense and allows the making of the production tape. The second assembly is the One-Card Loader Program which is used if the user wishes to operate outside of the FORTRAN monitor after a production tape has been made. The third program listing is the Three-Card Loader Program which is used in front of cases when operating under the FORTRAN monitor.

```
TPWRT                                                                    4/04/63     PAGE 1

 TRANSFER VECTOR
00000  314547016060      INP1
00001  256731636060      EXIT
00002  444645606060      MON
00003  244664636060      DOUT

00004  0074 00 4 00000   TPWRT CALL    INP1          INPUT   INCLUDE A NUMBER IN LOC 100
00005  0 00125 0 00124         PZE     1F,,TAPE
00006  0 07400 4 00001         CALL    EXIT

00007  0776 00 0 02230         SDH     UUU           SET TAPE DENSITY

00010  0534 00 1 00127         LXA     B,1           SET ADD, DEC DEPENDENT ON B AND BBBBB
00011  0634 00 1 00066         SXA     UP-2,1
00012  0534 00 1 00002         LXA     $MON,1
00013  0754 00 1 00000         PXA     ,1
00014 -0760 00 0 00003         SSM
00015  0400 00 0 00127         ADD     B
00016  0621 00 0 00064         STA     PU
00017  0400 00 0 00134         ADD     =1
00020  0767 00 0 00022         ALS     18
00021  0622 00 0 00123         STD     ION
00022  0634 00 1 00070         SXA     UP,1
00023  0634 00 1 00047         SXA     AP,1
00024  0634 00 1 00123         SXA     ION,1
00025  0634 00 1 00051         SXA     BP,1
00026  1 77634 1 00027         TXI     *+1,1,-A
00027  0634 00 1 00045         SXA     MANRIT,1
00030  1 00001 1 00031         TXI     *+1,1,1
00031 -0634 00 1 00122         SXD     OIN,1

00032  0500 00 0 00144         CLA     A             CHECK LOC 100 FOR WRITING MON OR PROGRAM
00033  0402 00 0 00134         SUB     =1
00034 -0100 00 0 00061         TNZ     NOTMON


00035 -0534 00 1 00122  MONRIT LXD     OIN,1         SET FOR OUTPUT...NO. OF WORDS IN MON
00036  0600 00 0 00126         STZ     LANT          INCLUDING CHECKSUM  I.E. 100 TO BBBBB INCL.
00037  0634 00 1 00126         SXA     LANT,1

00040  0774 00 1 00010         AXT     8,1           OUTPUT THAT NO. IN 1 WORD RECORD
00041  0766 00 0 02230     BAB WRS     UUU
00042 -0540 00 0 00121         RCHB    CATION
00043  0061 00 0 00043         TCOB    *
00044 -0022 00 0 00102         TRCB    BDLK

00045  0774 00 1 00000  MANRIT AXT     **,1          CHECKSUM THE MON  I.E. FROM 100 TO BBBBB-1
00046 -0754 00 0 00000         ZAC                   INCL. AND STO SUM INTO BBBBB
00047  0361 00 1 00000      AP ACL     **,1
00050  2 00001 1 00047         TIX     *-1,1,1
00051  0602 00 0 00000      BP SLW     **
```

```
TPWRT                                                                    4/04/63     PAGE 2

00052  0774 00 1 00010    STUT AXT     8,1          WRITE THE MON AND ITS CHECKSUM ONTO RECORD
00053  0766 00 0 02230         WRS     UUU          2  I.E. FROM 100 TO BBBBB INCL.
00054 -0540 00 0 00122         RCHB    OIN
00055  0061 00 0 00055         TCOB    *
00056 -0022 00 0 00105         TRCB    AGAIN

00057  0770 00 0 02230         WEF     UUU          WRITE AN END OF FILE

00060  0020 00 0 00004         TRA     TPWRT        TRA BACK TO START OF SUBROUTINE



00061  0500 00 0 00127  NOTMCN CLA     B            CHECKSUM TRAJ OR POWFLY  I.E. FROM BBBBB+1
00062  0400 00 0 00134         ADD     =1           TO 70000 INCL. AND STO SUM INTO BBBBB
00063  0621 00 0 00066         STA     *+3
00064  0774 00 1 00000      PU AXT     **,1
00065 -0754 00 0 00000         PXD
00066  0361 00 1 00000         ACL     **,1
00067  2 00001 1 00066         TIX     *-1,1,1
00070  0602 00 0 00000      UP SLW     **

00071  0774 00 1 00010         AXT     8,1          WRITE TRAJ OR POWFLY AND ITS CHECKSUM
00072  0766 00 0 02230     NIO WRS     UUU          I.E. FROM BBBBB TO 70000 INCL.
00073 -0540 00 0 00123         RCHB    ION
00074  0061 00 0 00074         TCOB    *
00075 -0022 00 0 00110         TRCB    TRYGAN

00076  0760 00 0 00165         SWT     5            EXIT
00077  0020 00 0 00101         TRA     *+2
00100  0770 00 0 02230         WEF     UUU
00101  0074 00 4 00001         CALL    EXIT



00102  0764 00 0 02230    BDLK BSR     UUU          TROUBLE WRITING 1 WORD RECORD   TRY 8 TIMES
00103  2 00001 1 00041         TIX     BAB,1,1
00104  0020 00 0 00114         TRA     PNT

00105  0764 00 0 02230   AGAIN BSR     UUU          TROUBLE WRITING MONITOR   TRY 8 TIMES
00106  2 00001 1 00053         TIX     STUT+1,1,1
00107  0020 00 0 00114         TRA     PNT

00110  0764 00 0 02230  TRYGAN BSR     UUU          TROUBLE WRITING TRAJ OR POWFLY  TRY 8 TIMES
00111  2 00001 1 00072         TIX     NIO,1,1
00112  0774 00 1 00010         AXT     8,1
00113  0020 00 0 00114         TRA     PNT

00114  0074 00 4 00003     PNT CALL    DOUT         8 FAILURES WRITING TAPE.PRINT ERROR COMMENT
00115  3 07724 0 00130         PTH     CANT,,4052
00116 -1 00012 0 00000         FVE     0,,10
00117  2 00001 1 00114         TIX     *-3,1,1
00120  0 07400 4 00001         CALL    EXIT
```

```
TPWRT                                                                    4/04/63     PAGE 3

00121  0 00001 0 00126  CATION IOCD    LANT,,1        I/O TO WRITE 1 WORD RECORD
00122  0 00000 0 00144     CIN IOCD    A,,**          I/O TO WRITE MONITOR
00123  0 00000 0 00000     ICN IOCD    **,,**         I/O TO WRITE TRAJ OR POWFLY
00124  0 00000 0 00000      1F                        MAKES ALL INPUT LOC RELATIVE TO ABSOLUTE 0
00125  0762 00 0 01202    TAPE RTDA    2              INPUT TAPE UNIT, MODE
00126  0 00000 0 00000    LANT                        STORAGE FOR WORD GIVING LENGTH OF MONITOR
00127 +000000070000       B     OCT    70000          LAST WORD OF PROGRAM
00130  232145454663      CANT BCI     4,CANNOT WRITE THIS TAPE
00131  606651316325
00132  606330316260
00133  632147256060
                 00144       A SYN     100            LOCATION OF INPUT FLAG
                 02230     UUU TAPENO  BBB            DEFINES WHICH TAPE MON SYSTEM IS TO GO ON
                             END

  LITERALS
00134  000000000001
```

```
TPWRT                                                                    4/04/63     PAGE 1
                    POST PROCESSOR ASSEMBLY DATA

     135 IS THE FIRST LOCATION NOT USED BY THIS PROGRAM

REFERENCES TC DEFINED SYMBCLS
      144       A    26,   32,  122,  134
      127       B    10,   15,   61
      124      1F     5
       47      AP    23
       51      BP    25
       64      PU    16
       70      UP    11,   22
       41     BAB   103
      123     ION    21,   24,   73
        2     MON    12
       72     NIO   111
      122     OIN    31,   35,   54
      114     PNT   104,  107,  113
     2230     UUU     7,   41,   53,   57,   72,  100,  102,  105,  110,  134
      102    BDLK    44
      130    CANT   115
        3    DOUT   114
        1    EXIT     6,  101,  120
        0    INP1     4
      126    LANT    36,   37,  121
       52    STUT   106
      125    TAPE     5
      105   AGAIN    56
        4   TPWRT    60
      121  CATION    42
       45  MANRIT    27
       35  MCNRIT
       61  NCTMON    34
      110  TRYGAN    75

NO ERROR IN ABOVE ASSEMBLY.
```

```
1 CARD LOADER                                                    6/28/63     PAGE 1

                                FUL

00000  0 00025 0 00003          IOCD    3,,21              READ THIS CARD
00001  0060 00 0 00001          TCOA    *

00002  0776 00 0 02230    BEGIN SDH     X                  PREPARE TO READ MONITOR
00003  0772 00 0 02210          REW     1160

00004  0762 00 0 02230          RDS     X                  READ MONITOR
00005 -0540 00 0 00025          RCHX    A
00006 -0544 00 0 00030          LCHX    A+3

00007  0535 00 5 00143          LAC     99,5               COMPUTE CHECKSUM
00010 -0754 00 0 00000          ZAC
00011  0361 00 4 00142          ACL     98,4
00012  1 00001 4 00013          TXI     *+1,4,1
00013 -3 77776 4 00011          TXL     *-2,4,-2

00014 -0022 00 0 00024          TRCX    *+8                REDUNDANCY CHECK
00015  0760 00 0 00006          COM

00016  0774 00 4 00011          AXT     9,4                LEAVE OUT 9 WORDS IN CHECKSUM
00017  0361 00 4 00172          ACL     122,4              STARTING AT 113
00020  2 00001 4 00017          TIX     *-1,4,1

00021  0361 00 1 00143          ACL     99,1               COMPARE CHECKSUMS
00022  0760 00 0 00006          COM

00023  0100 00 0 00302          TZE     194                OK   GO TO MONITOR

00024  0020 00 0 00002          TRA     BEGIN              NO GOOD   TRY AGAIN

00025 -0 00016 0 00143        A IOCP    99,,14             I/O COMMANDS
00026 -0 00011 0 00030          IOCP    24,,9
00027 -3 77777 0 00172          IOST    122,,-1

                 02230        X TAPENO  88B

                                END
```

```
        1 CARD LOADER                                                    6/28/63     PAGE 1
                    POST PROCESSOR ASSEMBLY DATA

      30 IS THE FIRST LOCATION NOT USED BY THIS PROGRAM

REFERENCES TO DEFINED SYMBOLS
       25      A     5,    6
     2230      X     2,    4,    5,    6,   14,   30
        2  BEGIN    24

 NO ERROR IN ABOVE ASSEMBLY.
```

The format of the row binary card for the one-card loader is shown below:

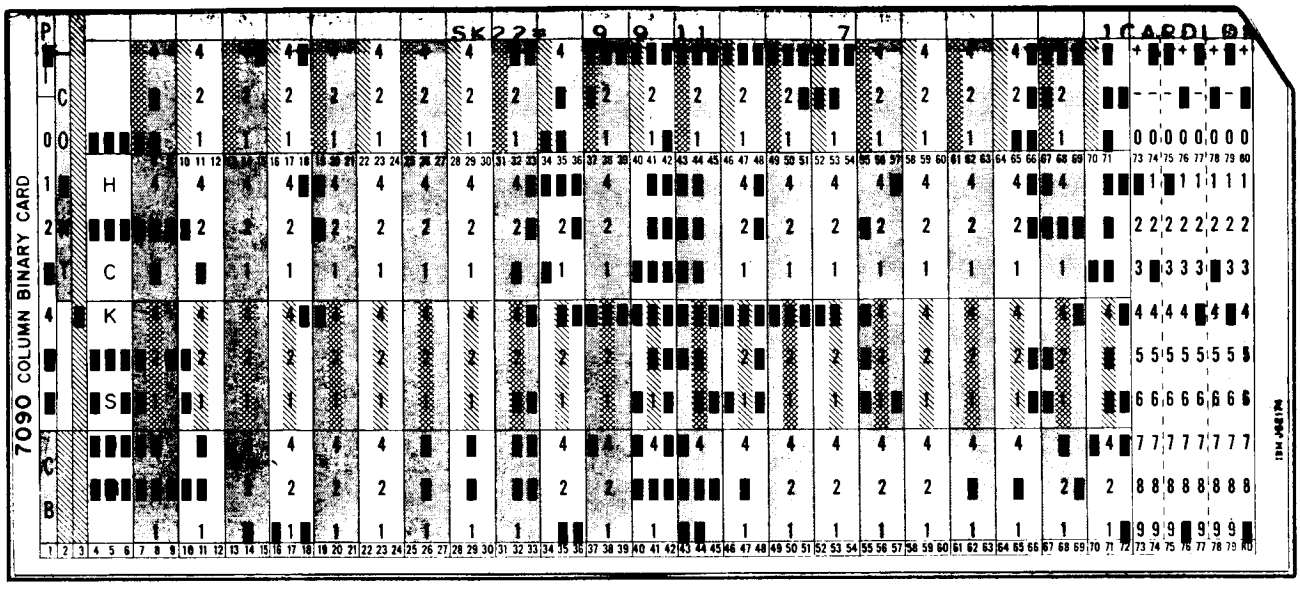

```
3CARD LOADER                                                          6/28/63     PAGE 1

00000  0766 00 0 01361        WPRA                  SENSE THE PRINTER TO ALERT THE OPERATOR
00001  0766 00 0 01361        WPRA
00002  0766 00 0 01361        WPRA

00003  0774 00 2 00005        AXT     5,2           HALT FOR OPERATOR TO MOUNT TAPES
00004  0000 00 0 47045        HTR     READ

00005                        BSS     20000         MOVE MONITOR READ I/O TO HIGHER CORE

47045  0776 00 0 02230   READ SDHX                  PREPARE TO READ TAPE
47046  0772 00 0 02230        REWX

47047  0762 00 0 02230        RDS     X             READ TAPE
47050 -0540 00 0 47066        RCHX    IO
47051 -0544 00 0 47072        LCHX    IO+4

47052  0535 00 5 47071        LAC     IO+3,5        COMPUTE THE CHECKSUM OF THE MONITOR
47053 -0754 00 0 00000        ZAC
47054  0361 00 4 00142        ACL     98,4
47055  1 00001 4 47056        TXI     *+1,4,1
47056 -3 77776 4 47054        TXL     *-2,4,-2
47057 -0022 00 0 47063        TRCX    AGAIN

47060 -0340 00 1 00143        LAS     99,1          COMPARE THIS SUM WITH THE ONE ON TAPE

47061  0020 00 0 47063        TRA     *+2           NO GOOD   TRY AGAIN

47062  0020 00 0 00302        TRA     194           OK  GO TO TRAJECTORY MONITOR


47063  2 00001 2 47045  AGAIN TIX     READ,2,1      TROUBLE READING TAPE...TRY 5 TIMES, STOP
47064  0420 00 0 00000        HPR
47065  1 00004 2 47045        TXI     READ,2,4

47066 -0 00001 0 47071     IO IOCP    IO+3,,1       I/O
47067 -0 00001 0 00144        IOCP    100,,1        I/O
47070 -3 77777 0 00145        IOST    101,,-1       I/O

                 02230      X TAPENO  BBB           TAPE UNIT, MODE

                              END
```

```
        3CARD LOADER                                                    6/28/63     PAGE 1
                    POST PROCESSOR ASSEMBLY DATA

    47071 IS THE FIRST LOCATION NOT USED BY THIS PROGRAM

REFERENCES TO DEFINED SYMBOLS
      2230       X 47045,47046,47047,47050,47051,47057,47071
     47066      IO 47050,47051,47052,47066
     47045    READ      4,47063,47065
     47063   AGAIN 47057

 NO ERROR IN ABOVE ASSEMBLY.
```

APPENDIX D. DETAILS OF SPECIAL OPTIONS FOR SPACE TRAJECTORY PROGRAM

PUBLIC INFORMATION PRINTOUT

Some public information may be printed out from the Space Trajectory Program under the JPL Trajectory Monitor. This information is associated with two output groups. Certain public information can be obtained with the geocentric output group. Other public information can be obtained as an additional two lines associated with the heliocentric output group.

The public information associated with the heliocentric and geocentric output blocks is obtained by putting a "1" in 167_{10} (the 10th octal digit from the left in location 167_{10}) (see Section VIII-D).

The following are the two (2) lines associated with the heliocentric output block obtained when the public information flag is thrown (octal digit in 167_{10}):

PUBLIC INFORMATION

X	Y	RPE	RPT	VGC	V

where

X is the x-component of the Sun to spacecraft vector measured in a vernal equinox ecliptic system, where the x direction is toward the vernal equinox of 1950.0 or true of-date, depending upon what was called for in 179_{10}. The component is scaled from kilometers to board units on output, where one board unit equals 16,093,440 km.

Y is the y-component in the same coordinate system as X above and is also in board units.

RPE is the Earth-probe distance in statute miles, where one statute mile is equal to 1.609344 km.

RPT is the target-probe distance in statute miles.

VGC is the geocentric inertial speed in statute miles per hour.

V is the heliocentric inertial speed in statute miles per hour.

The public information associated with the geocentric output block is four (4) additional lines printed at the end of the normal geocentric block. These are:

BOARD UNITS

UE	VE	ALF	S1	S2	---
UP1	VP1	UM1	VM1	S	M
UP2	VP2	UM2	VM2	GM	---

where UE and VE are both assembled as zeros. These are the board coordinates of the Earth and are invariant with date or trajectory.

The rest of the quantities in this block of public information will allow a display on a board which is ruled into a 150 by 120 grid. There are two possible scales available to associate this grid with kilometers.

Sketch D-1 describes the relationship between the centering angle α, U, and V.

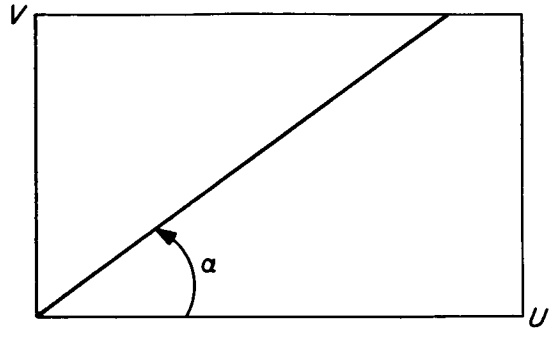

Sketch D-1

The UPi, VPi, i = 1, 2 are the board coordinates of the probe or spacecraft using either the S1 scale (i = 1) or the S2 scale (i = 2).

The UMi, VMi, i = 1, 2 are the board coordinates of the Moon for one of the two scales.

The UPi and VPi are obtained from the following equations:

$$x = \overline{R} \cdot \overline{P}_I$$

$$y = \overline{R} \cdot \overline{Q}_I$$

where $\overline{P}_I$, $\overline{Q}_I$ are unit vectors toward perigee and perpendicular to perigee in the orbit plane at injection time. Let

$$\frac{\overline{R} \times \overline{V}}{|\overline{R} \times \overline{V}|}$$

at injection form $\overline{W}_I$, a unit vector perpendicular to the orbit at injection. Now $\overline{W}_I \times \overline{P}_I$ will determine $\overline{Q}_I$.

$\overline{R}$ is the geocentric position vector of the probe at time T in kilometers. $\overline{V}$ is the inertial velocity vector of the spacecraft in kilometers per second.

The alpha (α) assembled in the program was obtained from the equation

$$\alpha = \tan^{-1}\left(\frac{20}{25}\right) + 10° = 50°$$

which puts the Moon on the diagonal of the board at encounter time on a Venus, Mariner 2 type, trajectory.

Using the obtained x, y, α, UE, and VE, the board position of the spacecraft can be found as follows:

$$UPi = \frac{(-x \cos\alpha + y \sin\alpha)}{1.609344\ Si} + UE$$

$$VPi = \frac{-(x \sin\alpha + y \cos\alpha)}{1.609344\ Si} + VE$$

$$i = 1, 2$$

where

S1 = 2500 statute miles per board unit

S2 = 10,000 statute miles per board unit

The Moon's position in board units can be obtained as follows:

Obtain the projection of the Moon's position at time T onto the orbital plane from

$$\overline{R}_{m_{proj}} = \overline{R}_m - \overline{W}_I(\overline{R}_m \cdot \overline{W}_I)$$

where $\overline{R}_m$ is the geocentric position vector of the Moon at time T and $\overline{W}_I$ has been previously defined.

Then the x and y components of the Moon in the orbital coordinates at injection are

$$x_m = \overline{R}_{m_{proj}} \cdot \overline{P}_I$$

$$y_m = \overline{R}_{m_{proj}} \cdot \overline{Q}_I$$

Then the Moon's coordinates in board units are

$$UMi = \frac{(-x_m \cos\alpha + y_m \sin\alpha)}{1.609344\ Si} + UE$$

$$VMi = \frac{-(x_m \sin\alpha + y_m \cos\alpha)}{1.609344\ Si} + VE$$

$$i = 1, 2$$

where S1 and S2 were explained above.

To obtain the angle S, the direction of the Sun measured counterclockwise from the positive U-axis, we obtain first the unit vectors U' and V' from

$$U' = -\overline{P}_I \cos\alpha + \overline{Q}_I \sin\alpha$$

$$V' = -\overline{P}_I \sin\alpha + \overline{Q}_I \cos\alpha$$

Then the Sun's projection onto the orbit plane is obtained from

$$\overline{R}_{s_{proj}} = \overline{R}_s - \overline{W}_I(\overline{R}_s \cdot \overline{W}_I)$$

where $\overline{R}_s$ is the geocentric position vector of the Sun at time T.

Finally, S is obtained from

$$\cos S = \frac{U' \cdot \overline{R}_{s_{proj}}}{\left|\overline{R}_{s_{proj}}\right|}$$

$$0° \leq S < 360°$$

$$\sin S = \frac{V' \cdot \overline{R}_{s_{proj}}}{\left|\overline{R}_{s_{proj}}\right|}$$

The angle M, the direction of the Moon measured counterclockwise from the positive U-axis, is obtained from the equations

$$\cos M = \frac{U' \cdot \overline{R}_{m_{proj}}}{\left|\overline{R}_{m_{proj}}\right|}$$

$$0° \leq M < 360°$$

$$\sin M = \frac{V' \cdot \overline{R}_{m_{proj}}}{\left|\overline{R}_{m_{proj}}\right|}$$

Finally, to obtain the angle GM, which is the direction to Greenwich, England, measured counterclockwise from the positive U-axis, we construct a unit vector G' given by

$$G' = (\cos \Theta_G, \sin \Theta_G, 0)$$

where Θ_G is the "right ascension" of Greenwich and is given by

$$\Theta_G = GHA(0) + \omega t$$

where GHA(0) is the Greenwich hour angle at the last midnight and t is the Greenwich mean time at time T. ω is the Earth's rotational rate.

The projection of G' onto the orbit plane is found from

$$\overline{G}_{proj} = G' - \overline{W}_I(G' \cdot \overline{W}_I)$$

and from this we find the angle GM

$$\cos GM = \frac{U' \cdot \overline{G}_{proj}}{\left|\overline{G}_{proj}\right|}$$

$$\sin GM = \frac{V' \cdot \overline{G}_{proj}}{\left|\overline{G}_{proj}\right|}$$

This completes the definitions of the public information associated with the geocentric output group. It is to be remembered that to trigger either of these public information outputs, the proper flags must be used in 167_{10}. Of course, it is understood that to get the public information associated with the geocentric output block, the geocentric normal output group must be called for, and likewise, to get the heliocentric associated public information, the heliocentric normal output group must be called for, as well as the public information flag being set.

BRONSTEIN ANGLES

It was desired to have an output option in the Space Trajectory Program which gave certain angles that describe the angular position of celestial bodies with respect to the spacecraft. The angles proved useful to engineers at JPL during Ranger and Mariner missions. Given are a reference body and an nth body.

Then if

$\overline{RPS}$ = unit probe-Sun position vector

$\overline{RPR}$ = unit probe-reference body position vector

$\overline{RPN}$ = unit probe-n^{th} body position vector

Therefore

$$\overline{H} = \frac{\overline{RPS} \times \overline{RPR}}{|\overline{RPS} \times \overline{RPR}|}$$

The generalized hinge angle GHG is given by

$$\sin GHG = \left[\frac{\overline{RPN} \times \overline{H}}{|\overline{RPN} \times \overline{H}|} \cdot \overline{RPS} \right] \qquad 0° \leq GHG < 360°$$

$$\cos GHG = \left[\frac{(\overline{H} \times \overline{RPN}) \times \overline{H}}{|\overline{H} \times \overline{RPN}|} \cdot \overline{RPS} \right]$$

The generalized swivel angle (GSL) is given by

$$\sin GSL = \overline{H} \cdot \overline{RPN} \qquad -90° \leq GSL \leq 90°$$

The generalized clock angle (GCK) is given by

$$\cos GCK = \frac{\overline{RPS} \times \overline{RPN}}{|\overline{RPS} \times \overline{RPN}|} \cdot \overline{H} \qquad 0° \leq GCK < 360°$$

$$\sin GCK = \overline{H} \cdot \frac{\overline{RPS} \times \overline{RPN}}{|\overline{RPS} \times \overline{RPN}|} \times \overline{RPS}$$

The generalized hinge angle to the reference body (GHR) is given by

$$\cos GHR = \overline{RPS} \cdot \overline{RPR}$$

$$0° \leq GHR < 360°$$

$$\sin GHR = (\overline{RPS} \times \overline{RPR}) \cdot \overline{H}$$

$\overline{K}$ is a unit vector perpendicular to a plane parallel to the ecliptic and containing the spacecraft.

The generalized longitude (GLG) is given by

$$\sin GLG = \frac{\overline{RPN} \times \overline{K}}{|\overline{RPN} \times \overline{K}|} \cdot \overline{RPS}$$

$$0° \leq GLG < 360°$$

$$\cos GLG = \overline{RPS} \cdot \frac{(\overline{K} \times \overline{RPN}) \times \overline{K}}{|\overline{K} \times \overline{RPN}|}$$

The alternate latitude (ALT) is given by

$$\cos ALT = \frac{\overline{RPS} \times \overline{RPN}}{|\overline{RPS} \times \overline{RPN}|} \cdot \overline{K}$$

$$0° \leq ALT < 360°$$

$$\sin ALT = \overline{K} \cdot \frac{\overline{RPS} \times \overline{RPN}}{|\overline{RPS} \times \overline{RPN}|} \times \overline{RPS}$$

The generalized latitude (GLT) is given by

$$\sin GLT = \overline{RPN} \cdot \overline{K} \qquad -90° \leq GLT \leq 90°$$

The alternate clock angle (ACK) is given by

$$\sin ACK = \overline{B} \times \frac{\overline{RPN} \times \overline{B}}{|\overline{RPN} \times \overline{B}|} \cdot \overline{H} \qquad -90° \leq ACK \leq 90°$$

where

$$\overline{B} = \overline{H} \times \overline{RPS}$$

The alternate B latitude (BLT) is given by

$$\sin BLT = \overline{F} \times \frac{\overline{RPN} \times \overline{F}}{\left|\overline{RPN} \times \overline{F}\right|} \cdot \overline{K} \qquad -90° \leq BLT \leq 90°$$

where

$$\overline{F} = \overline{K} \times \overline{RPS}$$

These angles are printed in one block by putting a 1 on the ninth digit from the left in location 167_{10} and by input described on the input sheet labeled "Bronstein Angles" in Section VIII-D.

CONIC PRINT FORMAT

The $\begin{bmatrix}\text{Geocentric}\\ \text{Heliocentric}\\ \text{Targetcentric}\end{bmatrix}$ conic output blocks have been reformatted and recoded from the conic output format of Ref. 2. The output parameters have been grouped so that the variables independent of the reference coordinate system (Group A) are in one block and the variables dependent on the reference coordinate system (Group B) are in a second block. Further, the reference plane can be one or more of the following planes: Earth equator, ecliptic, orbit plane of the target, true target equator. Input locations 167_{10} and 178_{10} have been modified to handle the additional flags needed. The conic flags in 167_{10} are used to control output of Group A while the flags in 178_{10} are used to control output of all or part of Group B. In 178_{10}, a 1 in a flag causes all of Group B to be printed, a 2 flags all but the first line, and a 3 flags the last line only. The output format is defined in Section IX-B.

MOTOR BURN

The Space Trajectory Program has the capability of simulating one motor burn. The acceleration due to the motor burn is given by

$$\overline{A}_m = -\left[\frac{F}{m_0 - \dot{m}(T - T_0)}\right] g\,\overline{C}$$

where

F = thrust in lb-force

m_0 = initial weight in lb

$\dot{m}$ = weight flow rate in lb/sec

T = current time

T_0 = initial time

g = 0.0098061976 km/sec^2

$$\overline{C} = \frac{\overline{R}}{|\overline{R}|}\sin\mu + \overline{M}\cos\mu$$

where

$\overline{R}$ is the Earth-spacecraft position vector

$|\overline{R}|$ is the magnitude of $\overline{R}$

μ is the bias angle, an input parameter

$$M = \overline{W} \times \frac{\overline{R}}{|\overline{R}|}$$

where

$$\overline{W} = \frac{\overline{R} \times \overline{V}}{|\overline{R} \times \overline{V}|}$$

where $\overline{V}$ is the Earth-spacecraft velocity vector.

The motor starts burning on time, an input parameter, and terminates burning on either the value of C_3 or time.

Refer to the motor burn input sheet for the locations of the input parameters, Section VIII-D.

DRAG

The Space Trajectory Program has the capability of simulating atmospheric drag. Two drag models, flatplate and spherical, have been provided. The acceleration due to drag is given by

$$\overline{a}_d = \frac{k}{m}\left[\frac{1}{2}\rho_r|\overline{V}|AC_d\overline{V}\right]$$

where for both models

A = effective cross-sectional area of the spacecraft, cm^2

ρ_r = atmospheric density, kg/m^3

$\overline{V}$ = Earth-fixed velocity vector of the spacecraft, km/sec

$|\overline{V}|$ = magnitude of $\overline{V}$, km/sec

m = mass of the spacecraft in kilograms, an input parameter

C_d = coefficient of drag, unitless

k = a constant value of 1/10 used to make the units of $\overline{a}_d$ km/sec^2

The input parameter A is used as a flag for the drag option. A nonzero A flags drag, while A = 0 flags no drag.

Next

$$\text{HIGHT} = |\overline{R}| - 6378 + n$$

where

$|\overline{R}|$ = Earth-spacecraft radius vector magnitude

$$n = \begin{cases} 0 \text{ if the spacecraft is not in the Earth's shadow} \\ 20 \text{ if the spacecraft is in the Earth's shadow, km} \end{cases}$$

Then

$$\ln \rho = \begin{cases} 0 \text{ for HIGHT} < 100 \\ P_6^1 \text{ (HIGHT) for } 100 \leq \text{HIGHT} < 135 \\ P_6^2 \text{ (HIGHT) for } 135 \leq \text{HIGHT} < 440 \\ 0 \text{ for HIGHT} \geq 440 \end{cases}$$

where P_6^1 is the following sixth-degree polynominal:

$$a_0 = -0.67268990 \times 10^1$$
$$a_1 = 0.31037092 \times 10^0$$
$$a_2 = -0.48351957 \times 10^{-2}$$
$$a_3 = -0.10814594 \times 10^{-4}$$
$$a_4 = 0.17312373 \times 10^{-6}$$
$$a_5 = 0.90570804 \times 10^{-9}$$
$$a_6 = -0.62506036 \times 10^{-11}$$

and P_6^2 is the following sixth-degree polynominal:

$$b_0 = 0.11026027 \times 10^0$$
$$b_1 = -0.27174679 \times 10^0$$
$$b_2 = 0.11722739 \times 10^{-2}$$
$$b_3 = -0.10759789 \times 10^{-5}$$
$$b_4 = -0.73376560 \times 10^{-8}$$
$$b_5 = 0.22268473 \times 10^{-10}$$
$$b_6 = -0.18484971 \times 10^{-13}$$

and ρ_0 = atmospheric density at sea level

$$\rho_r = \frac{\rho}{\rho_0}$$

The computation of C_d is the difference between the models and is determined on the basis of the value of α. Flat plate is $\alpha = 0$, α nonzero gives spherical.

For the flatplate model

$$C_d = \exp\left[k_1\left(\sqrt{A \times 10^{-4}}\right)(\rho_r)\right](1.1) + 1$$

where

$k_1 = -6.87 \times 10^7$ and can be changed by input

α = accommodation factor = 0

For the spherical model ($\alpha \neq 0$)

$M_e = P_5^1$ (HIGHT) where the coefficients of the fifth-degree polynominal are

$$c_0 = 0.20122668 \times 10^0$$
$$c_1 = 0.17572864 \times 10^0$$
$$c_2 = -0.10661253 \times 10^{-2}$$
$$c_3 = 0.16206051 \times 10^{-5}$$
$$c_4 = 0.10690795 \times 10^{-8}$$
$$c_5 = -0.30545982 \times 10^{-11}$$

α = accommodation factor and is input in the range $0.8 \leq \alpha \leq 1.0$

$$F = \sqrt{\frac{1 - \alpha}{7} + \frac{1.23 \times 10^{-2} \alpha}{M_e |\overline{V}|^2}}$$

$$\Delta = - \rho_r \left[\frac{2.26 \sqrt{A \times 10^{-4}} (4.7 \times 10^5 + 2.86 \times 10^6 F)}{F M_e} \right]$$

$$\Delta' = e^{\Delta}$$

$$C_d = 1 + \left[\frac{2 + .708 \sqrt{1 - \alpha}}{1 + .708 \sqrt{1 - \alpha}} \right] \Delta'$$

See Section VIII-D for the DRAG input sheet. The atmospheric data was obtained from Ref. 5.

SOLAR RADIATION PRESSURE

The Space Trajectory Program can simulate the perturbation due to the solar radiation pressure (Ref. 6). The perturbing acceleration is given by

$$\bar{a}_{rp} = \frac{K}{|\bar{R}|^2}\bar{S} \ (\mathrm{km/sec^2})$$

where $\bar{R}$ is the Sun-spacecraft position vector
and

$$K = \frac{(SC)(A)}{m}\left[\frac{GB1 - GB2(EPS)}{A} + GB + 1\right](\mathrm{km^3/sec^2})$$

where

SC = solar radiation constant $= 1.02 \times 10^8 \left(\frac{\mathrm{kg - km}}{\mathrm{sec^2}} \times 10^{-6}\right)$

$SC = \left(\frac{J}{c}\right)\left(r_{SE}^2\right)$

J = radiant energy per unit area per unit time

$= 1.37 \times 10^3\left(\frac{\mathrm{watts}}{\mathrm{meter^2}}\right) = 1.37 \times 10^3\left(\frac{\mathrm{kg}}{\mathrm{sec^3}}\right)$

c = speed of light $= 2.9986 \times 10^5\left(\frac{\mathrm{km}}{\mathrm{sec}}\right)$

r_{SE} = mean distance from Sun to Earth = 1 AU $= 1.49599 \times 10^8$(km)

A = area of spacecraft, $\mathrm{m^2}$

m = mass of spacecraft, kg

$GB1$ = constant coefficient of polynominal in EPS, rad-$\mathrm{m^2}$

$GB2$ = linear coefficient of polynominal in EPS, rad-$\mathrm{m^2}$/deg

EPS = Earth-probe-Sun angle, deg

$GB = (\gamma)(B)$

γ = percent of reflected radiant energy

$B = \begin{cases} 1 \text{ for specular reflection} \\ 2/3 \text{ for diffuse reflection} \end{cases}$

$\frac{\bar{R}}{|\bar{R}|} = \bar{S}$ = unit Sun-spacecraft position vector

RADIOMETER PRINTOUT

For Venus trajectories it is desirable to have the option of printing at three specified times near Venus. Prints occur when the probe passes through each of the parallel planes shown in Sketch D-2, each of which is perpendicular to the Venus-Sun line.

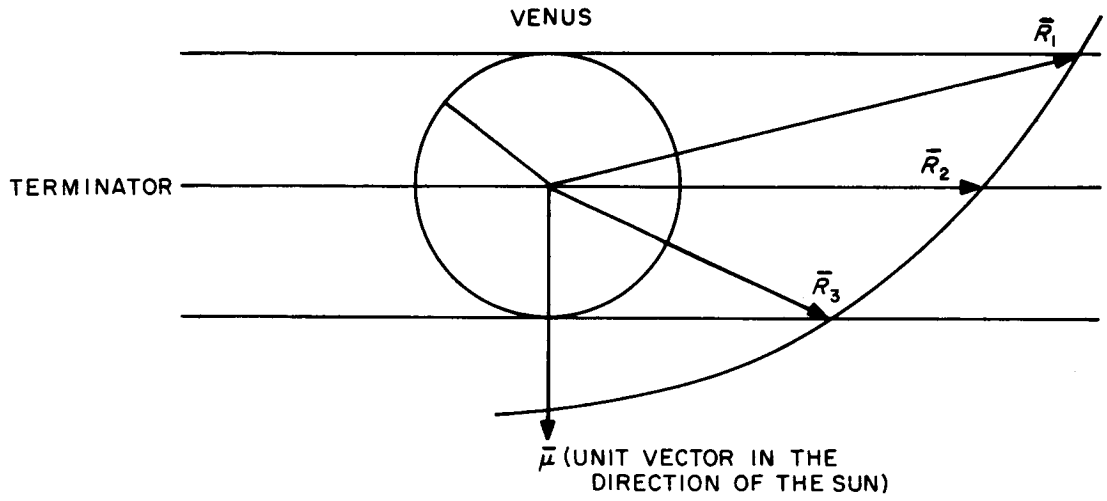

Sketch D-2

R_1 and R_3 are at $\left|(\bar{R} \cdot \bar{\mu})\right| = r$(radius of Venus)

R_2 occurs at $\bar{R} \cdot \bar{\mu} = 0$

The input flag which signals the above computations is the eleventh digit from the left in location 167_{10} (see Section VIII-D). The printout given at these times is explained in Section IX-B.

APPENDIX E. FLOW DIAGRAMS OF JPL TRAJECTORY MONITOR

The flow diagrams which follow explain in detail the various logic paths that can be taken by the monitor as a function of the input given it. Most questions of detailed operation will be explained by these diagrams.

FLOW DIAGRAMS OF "MON"

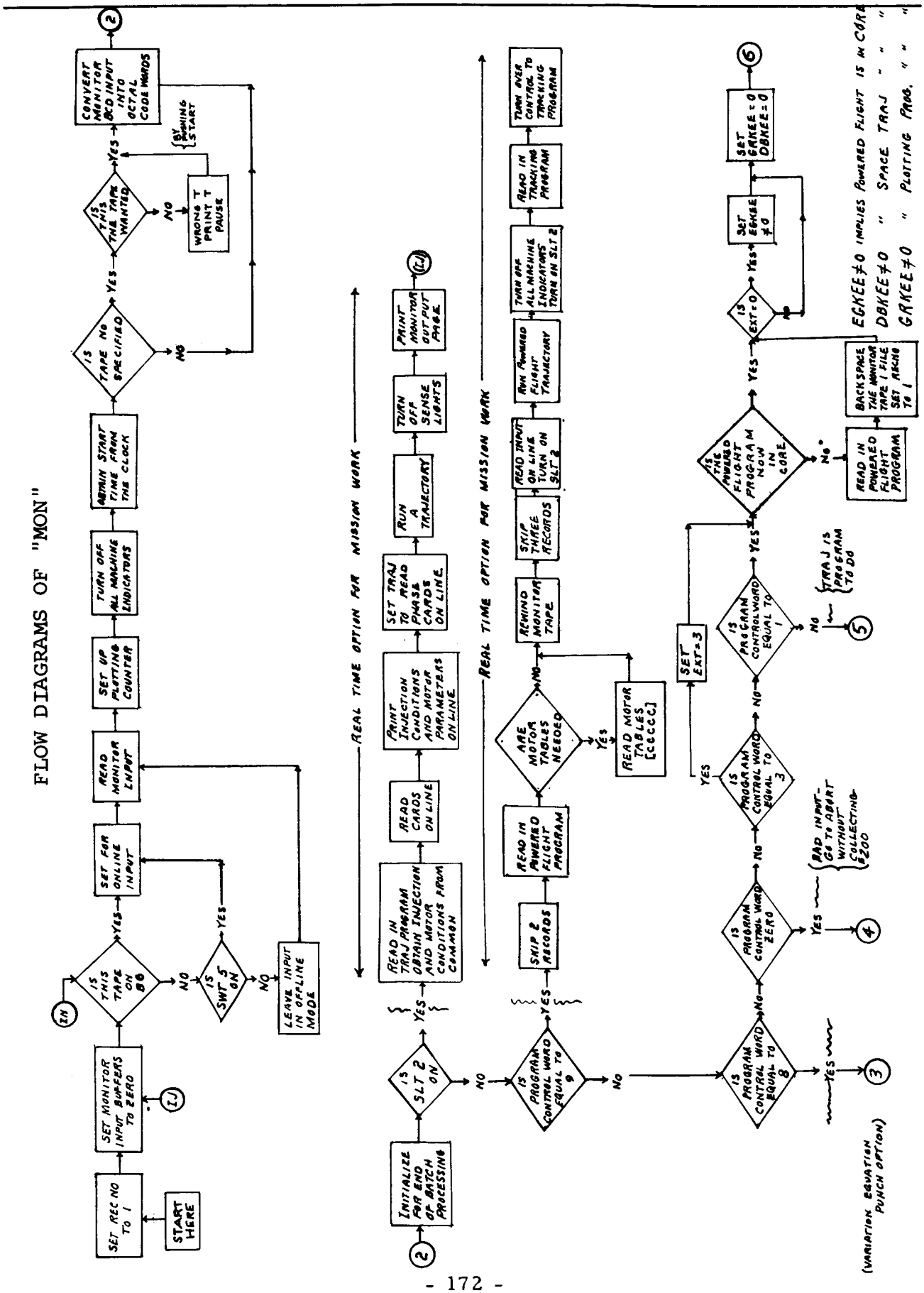

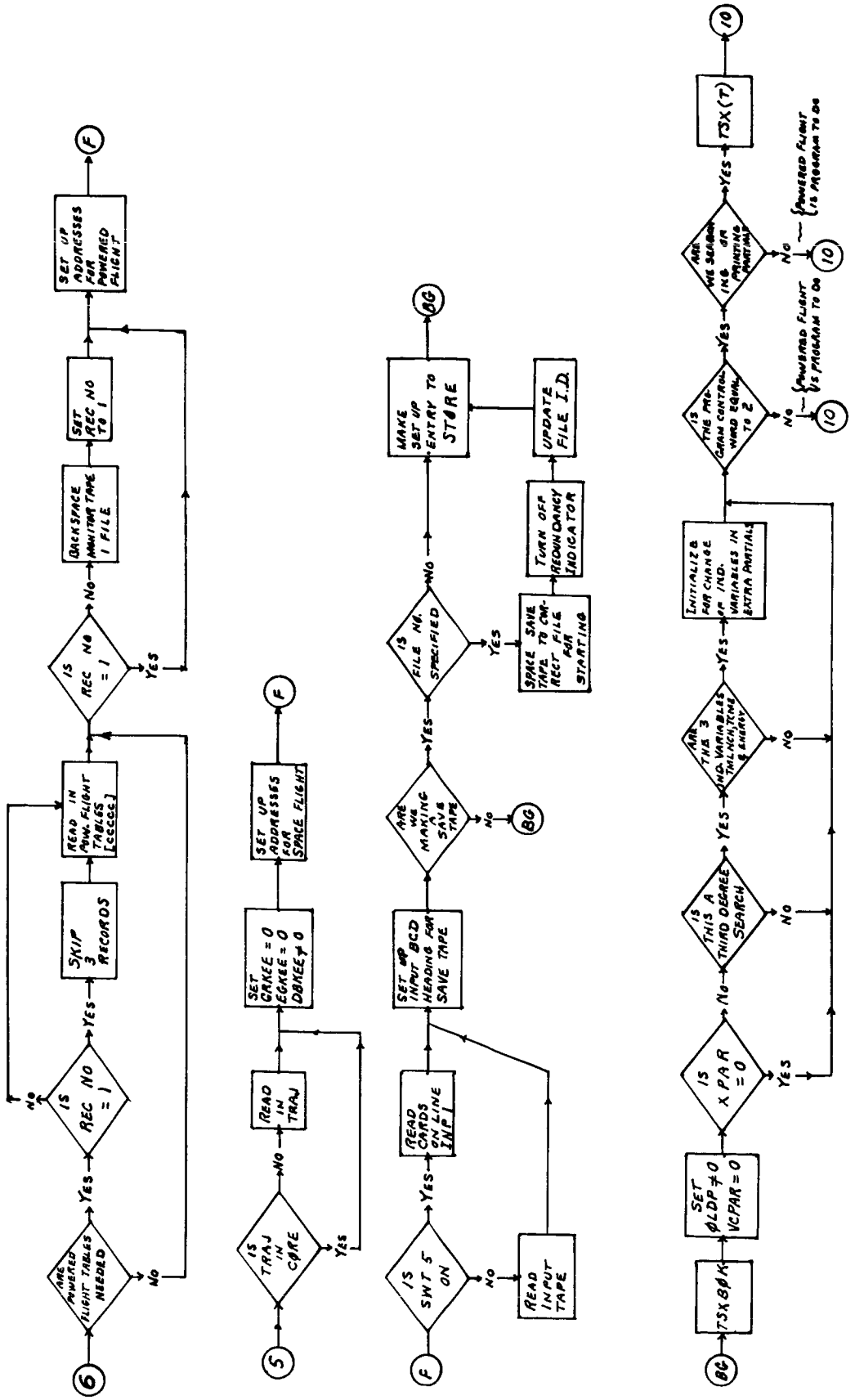

VCPAR ≠ 0 OBTAIN TRANSFORMED PARTIALS (SEE SECTION III)

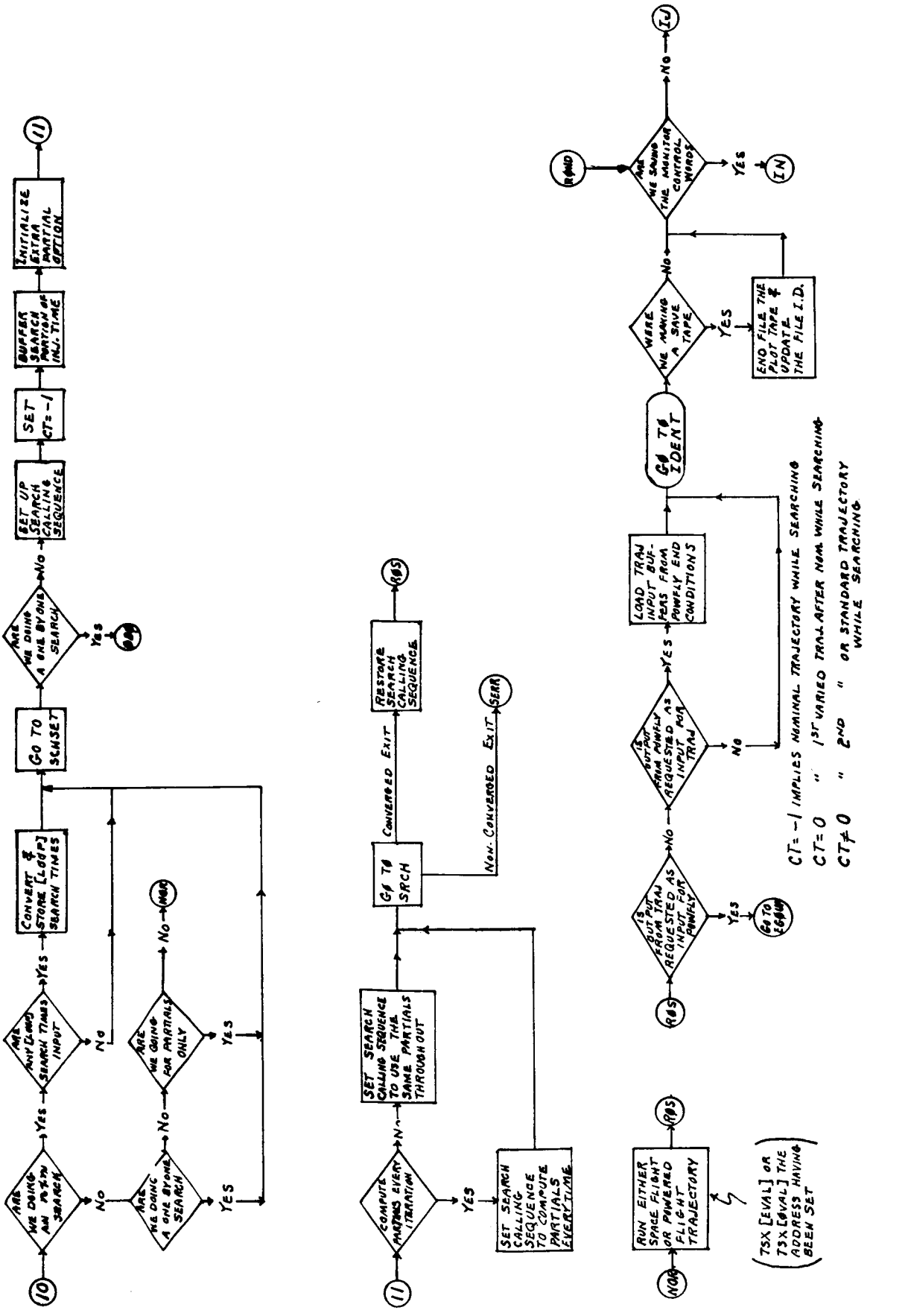
10
ARE WE DOING AN ROTATION SEARCH
YES
NO
ARE ANY [LOOP] SEARCH TIMES INPUT
YES
NO
CONVERT & STORE [LOOP] SEARCH TIMES
ARE WE DOING A ONE BY ONE SEARCH
YES
NO
ARE WE GOING FOR PARTIALS ONLY
YES
NO
NOR
GO TO SCHSET
ARE WE DOING A ONE BY ONE SEARCH
YES
NO
SET UP SEARCH CALLING SEQUENCE
SET CT=-1
BUFFER SEARCH PORTION OF INJ. TIME
INITIALIZE EXTRA PARTIAL OPTION
11
11
COMPUTE PARTIALS EVERY ITERATION
YES
NO
SET SEARCH CALLING SEQUENCE TO COMPUTE PARTIALS EVERY TIME
SET SEARCH CALLING SEQUENCE TO USE THE SAME PARTIALS THROUGH OUT
GO TO SRCH
CONVERGED EXIT
RESTORE SEARCH CALLING SEQUENCE
ROS
NON-CONVERGED EXIT
SERR
NOR
RUN EITHER SPACE FLIGHT OR POWERED FLIGHT TRAJECTORY
ROS
(TSX [EVAL] OR TSX [ØVAL] THE ADDRESS HAVING BEEN SET
ROS
IS OUTPUT FROM TRAJ REQUESTED AS INPUT FOR POWFLY
YES
GO TO EGØUP
NO
IS OUTPUT FROM POWFLY REQUESTED AS INPUT FOR TRAJ
YES
NO
LOAD TRAJ INPUT BUFFERS FROM POWFLY END CONDITIONS
GO TO IDENT
WERE WE MAKING A SAVE TAPE
YES
END FILE THE PLOT TAPE & UPDATE THE FILE I.D.
NO
ARE WE SAVING THE MONITOR CONTROL WORDS
YES
IN
NO
IJ
CT=-1 IMPLIES NOMINAL TRAJECTORY WHILE SEARCHING
CT=0 " 1ST VARIED TRAJ AFTER NOM. WHILE SEARCHING
CT≠0 " 2ND " OR STANDARD TRAJECTORY WHILE SEARCHING

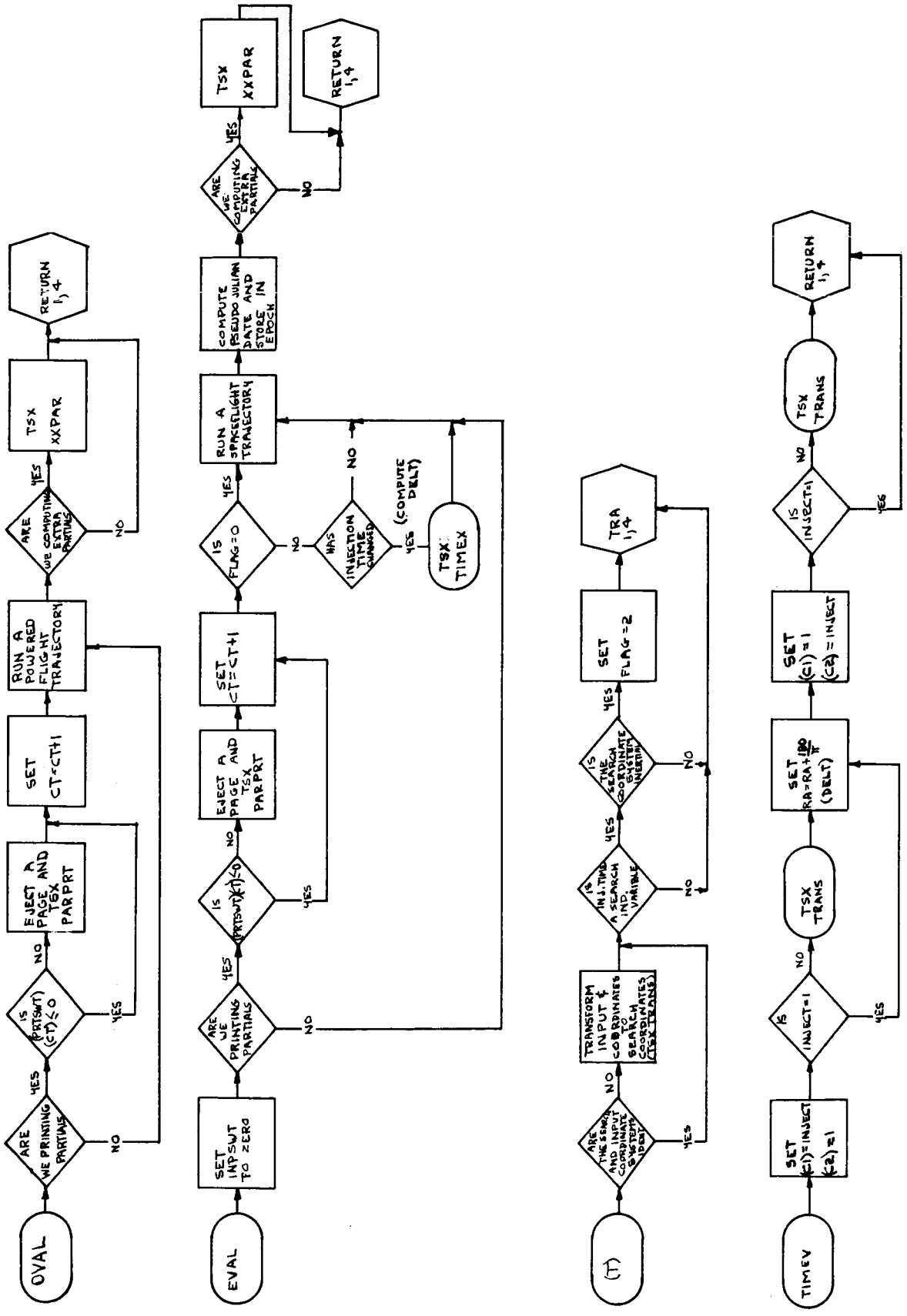
OVAL
ARE WE PRINTING PARTIALS
YES
NO
IS (PRTSWT)(CT) ≤ 0
YES
NO
EJECT A PAGE AND TSX PARPRT
SET CT=CT+1
RUN A POWERED FLIGHT TRAJECTORY
ARE WE COMPUTING EXTRA PARTIALS
YES
NO
TSX XXPAR
RETURN 1,4
EVAL
SET INPSWT TO ZERO
ARE WE PRINTING PARTIALS
YES
NO
IS (PRTSWT)(CT) ≤ 0
YES
NO
EJECT A PAGE AND TSX PARPRT
SET CT=CT+1
IS FLAG=0
YES
NO
RUN A SPACECRAFT TRAJECTORY
COMPUTE PSEUDO JULIAN DATE AND STORE IN EPOCH
ARE WE COMPUTING EXTRA PARTIALS
YES
NO
TSX XXPAR
RETURN 1,4
WAS INJECTION TIME CHANGED
YES
NO
TSX: TIMEX
(COMPUTE DELT)
(T)
ARE THE SEARCH AND INPUT COORDINATE SYSTEMS IDENT.
YES
NO
TRANSFORM INPUT & COORDINATES TO SEARCH COORDINATES (TSX TRANS)
IS INJ. TIME A SEARCH IND. VARIABLE
YES
NO
IS THE SEARCH COORDINATE SYSTEM INERTIAL
YES
NO
SET FLAG=2
TRA 1,4
TIMEV
SET (C1)=INJECT (C2)=1
IS INJECT=1
YES
NO
TSX TRANS
SET RA=RA+180/π (DELT)
SET (C1)=1 (C2)=INJECT
IS INJECT=1
YES
NO
TSX TRANS
RETURN 1,4

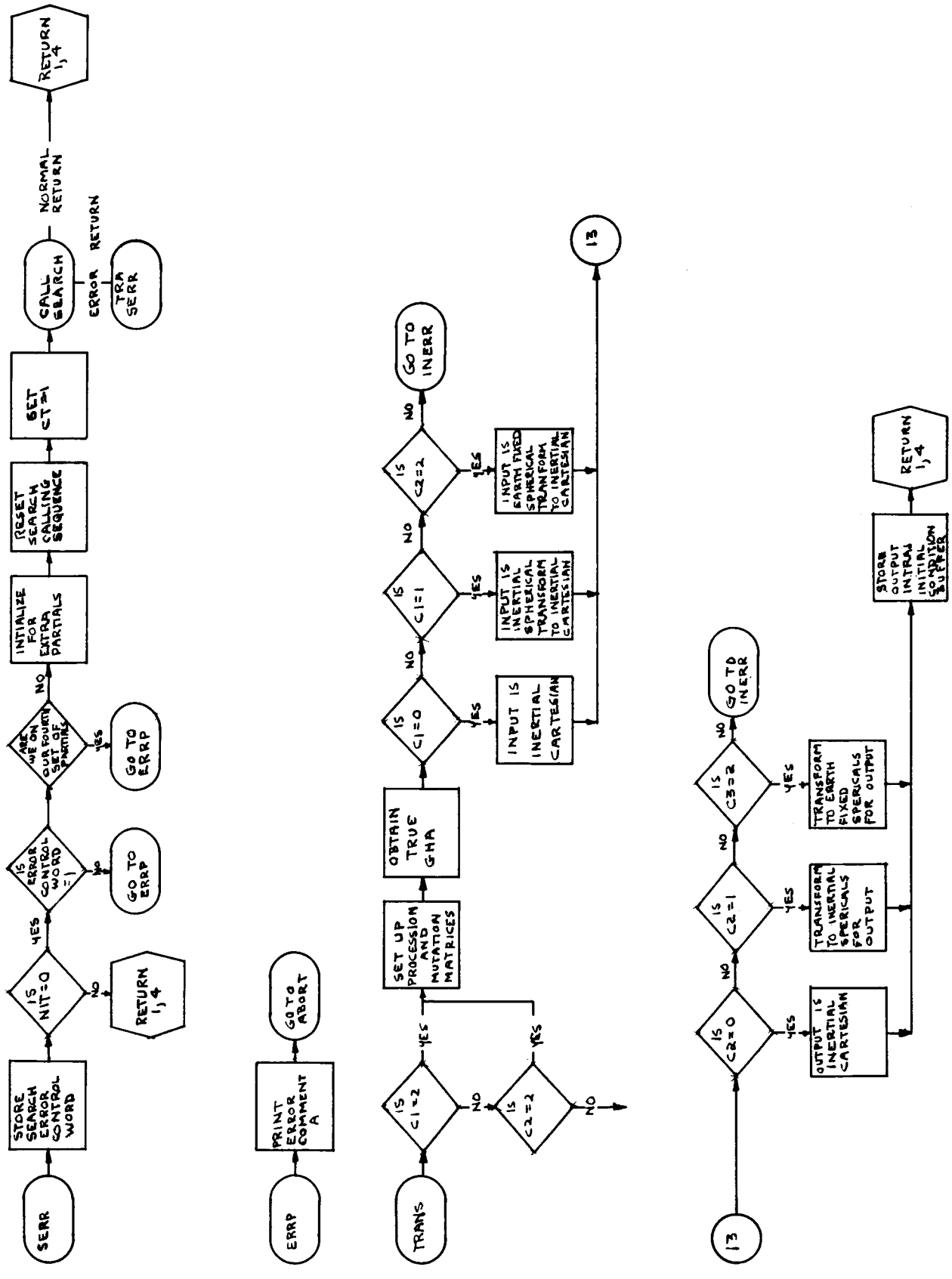
SERR
STORE SEARCH ERROR CONTROL WORD
IS NIT=0
YES
NO
RETURN 1,4
IS ERROR CONTROL WORD =1
YES
NO
GO TO ERRP
ARE WE ON OUR FOURTH SET OF PARTIALS
YES
NO
GO TO ERRP
INTIALIZE FOR EXTRA PARTIALS
RESET SEARCH CALLING SEQUENCE
SET CT=1
CALL SEARCH
NORMAL RETURN
ERROR RETURN
TRA SERR
RETURN 1,4
ERRP
PRINT ERROR COMMENT A
GO TO ABORT
TRANS
IS C1=2
YES
NO
IS C2=2
YES
NO
SET UP PROCESSION AND NUTATION MATRICES
OBTAIN TRUE GHA
IS C1=0
YES
NO
INPUT IS INERTIAL CARTESIAN
IS C1=1
YES
NO
INPUT IS INERTIAL SPHERICAL TRANSFORM TO INERTIAL CARTESIAN
IS C2=2
YES
NO
INPUT IS EARTH FIXED SPHERICAL TRANFORM TO INERTIAL CARTESIAN
GO TO INERR
13
13
IS C2=0
YES
NO
OUTPUT IS INERTIAL CARTESIAN
IS C2=1
YES
NO
TRANSFORM TO INERTIAL SPERICALS FOR OUTPUT
IS C3=2
YES
NO
TRANSFORM TO EARTH FIXED SPERICALS FOR OUTPUT
GO TO INERR
STORE OUTPUT IN TRAJ INITIAL CONDITION BUFFER
RETURN 1,4

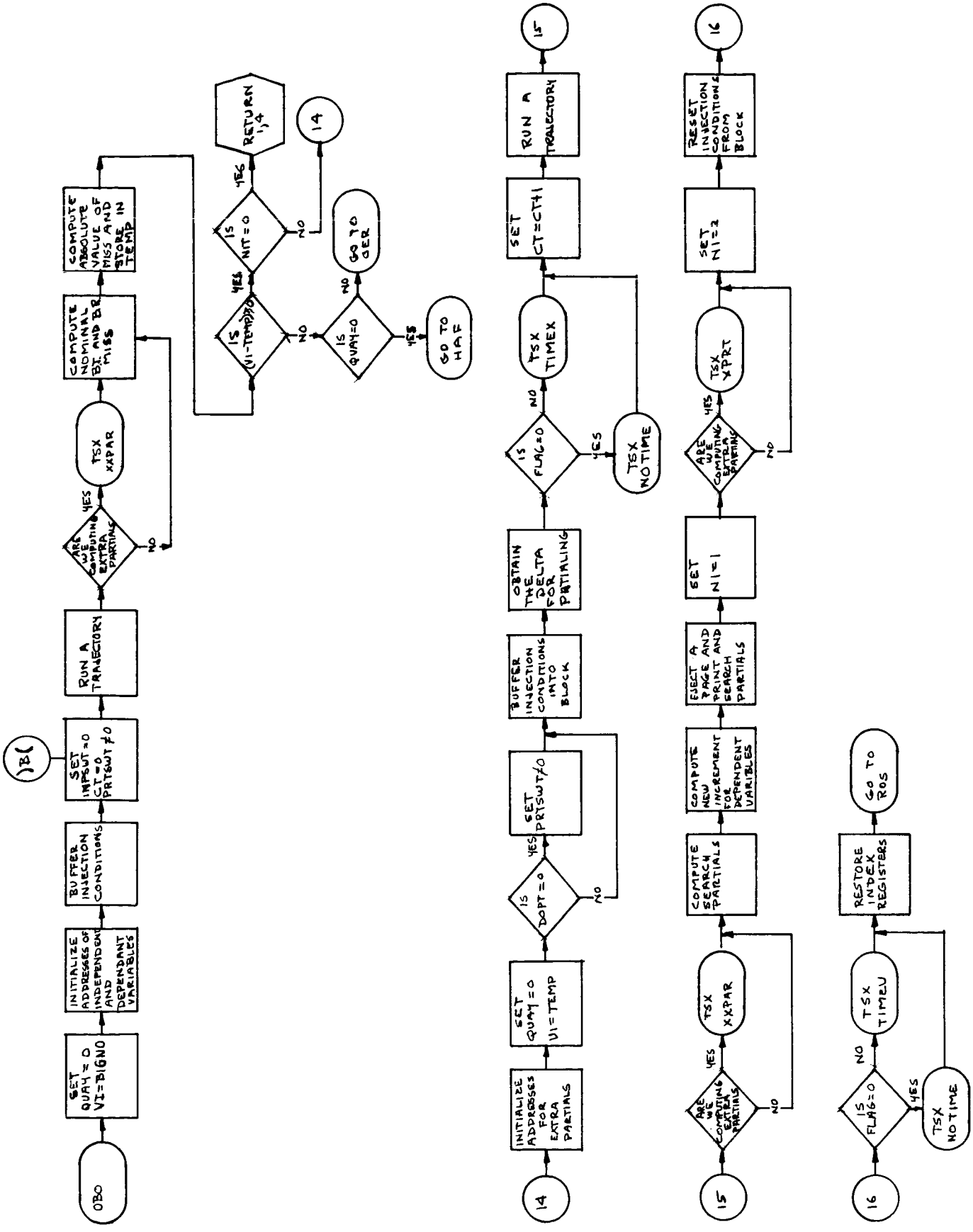
OBO
SET QUAY=0 VI=BIGNO
INITIALIZE ADDRESSES OF INDEPENDENT AND DEPENDANT VARIABLES
BUFFER INJECTION CONDITIONS
SET IMPSWT=0 CT=0 PRTSWT≠0
)B(
RUN A TRAJECTORY
ARE WE COMPUTING EXTRA PARTIALS
YES
NO
TSX XXPAR
COMPUTE NOMINAL BT AND BR MISS
COMPUTE ABSOLUTE VALUE OF MISS AND STORE IN TEMP
IS (VI-TEMP)≤0
YES
NO
IS NIT=0
YES
NO
RETURN 1,4
14
IS QUAY=0
NO
GO TO OER
YES
GO TO HAF
14
INITIALIZE ADDRESSES FOR EXTRA PARTIALS
SET QUAY=0 VI=TEMP
IS DOPT=0
YES
NO
SET PRTSWT≠0
BUFFER INJECTION CONDITIONS INTO BLOCK
OBTAIN THE DELTA FOR PARTIALING
IS FLAG=0
NO
YES
TSX TIMEX
TSX NOTIME
SET CT=CT+1
RUN A TRAJECTORY
15
15
ARE WE COMPUTING EXTRA PARTIALS
YES
NO
TSX XXPAR
COMPUTE SEARCH PARTIALS
COMPUTE NEW INCREMENT FOR DEPENDENT VARIBLES
EJECT A PAGE AND PRINT AND SEARCH PARTIALS
SET N1=1
ARE WE COMPUTING EXTRA PARTIALS
YES
NO
TSX XPRT
SET N1=2
RESET INJECTION CONDITIONS FROM BLOCK
16
16
IS FLAG=0
NO
YES
TSX TIMEU
TSX NOTIME
RESTORE INDEX REGISTERS
GO TO ROS

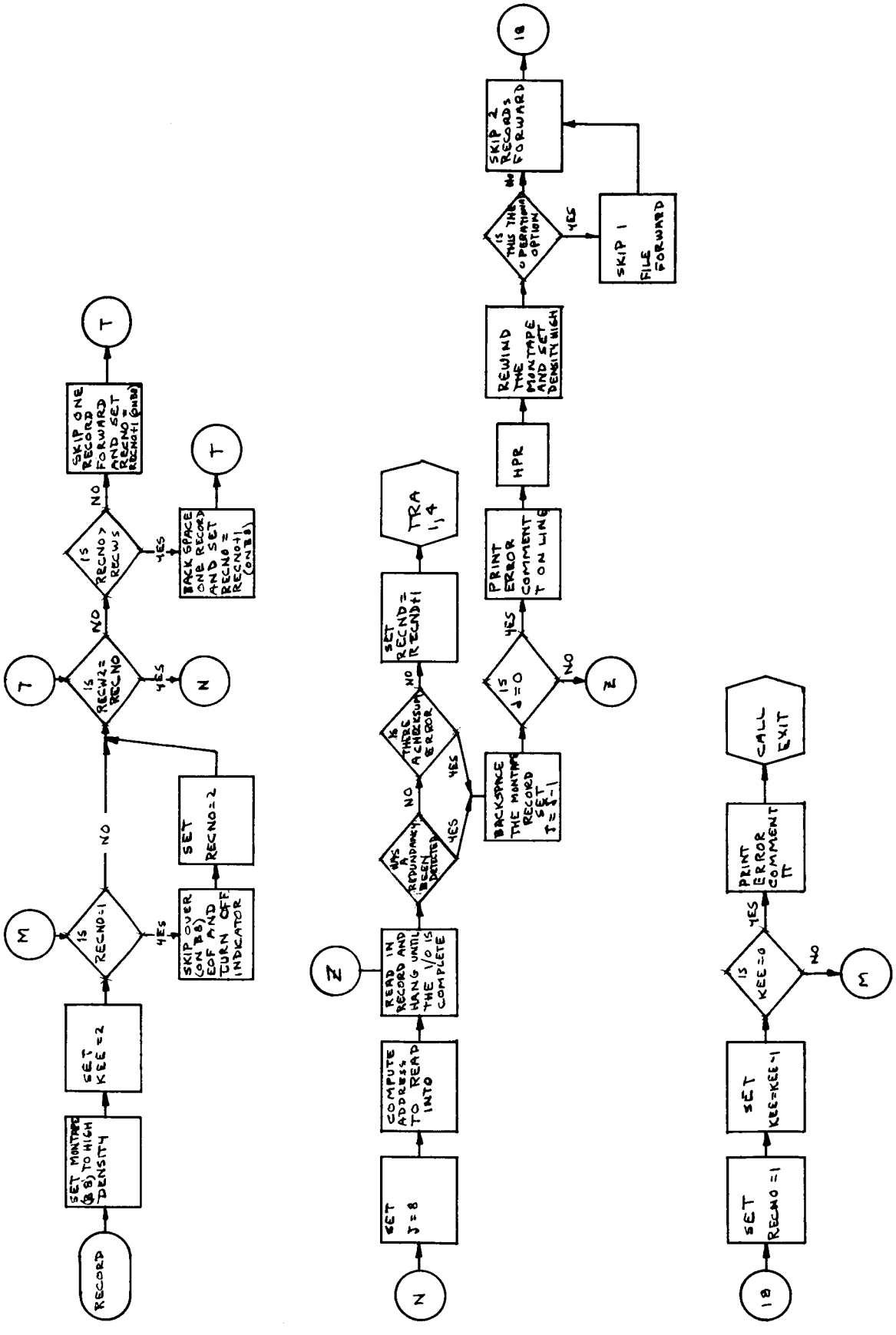
RECORD
SET MONTAPE (B8) TO HIGH DENSITY
SET KEE = 2
IS RECNO = 1
YES
NO
SKIP OVER (ON B8) EOF AND TURN OFF INDICATOR
SET RECNO = 2
IS RECW2 = RECNO
YES
NO
IS RECNO > RECWS
YES
NO
BACK SPACE ONE RECORD AND SET RECNO = RECNO+1 (ON B8)
SKIP ONE RECORD FORWARD AND SET RECNO = RECNO+1 (ON B8)
M
T
N
Z
SET J = 8
COMPUTE ADDRESS TO READ INTO
READ IN RECORD AND HANG UNTIL THE I/O IS COMPLETE
HAS A REDUNDANCY BEEN DETECTED
IS THERE A CHECKSUM ERROR
SET RECND = RECND+1
TRA 1,4
BACKSPACE THE MONTAPE RECORD SET J = J-1
IS J = 0
PRINT ERROR COMMENT T ON LINE
HPR
REWIND THE MONTAPE AND SET DENSITY HIGH
IS THIS THE OPERATIONAL OPTION
SKIP 1 FILE FORWARD
SKIP 2 RECORDS FORWARD
18
SET RECNO = 1
SET KEE = KEE-1
IS KEE = 0
PRINT ERROR COMMENT TT
CALL EXIT

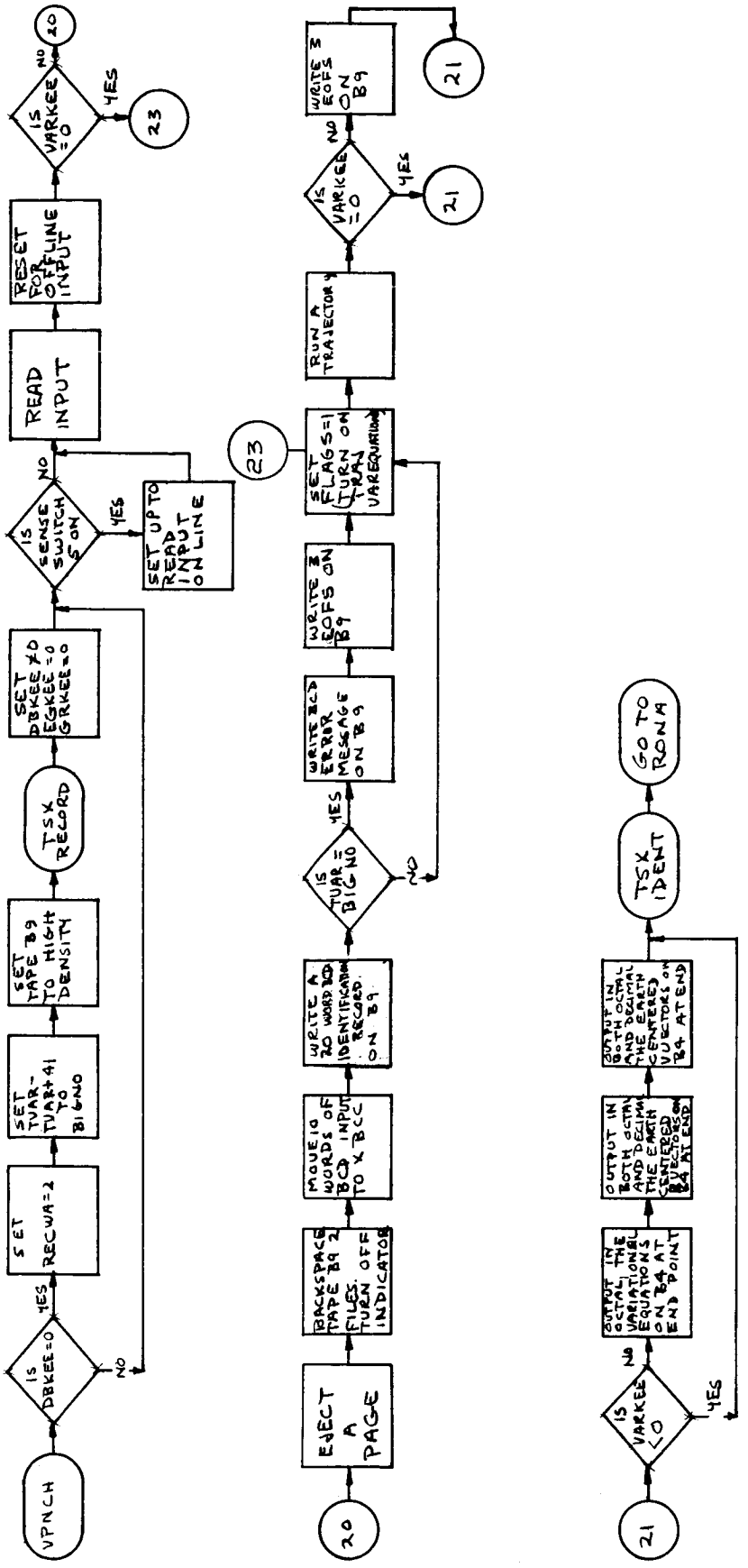
VPNCH
IS DBKEE=0
YES
NO
SET RECWA=2
SET TVAR-TVAR+41 TO BIGNO
SET TAPE B9 TO HIGH DENSITY
TSX RECORD
SET DBKEE≠0 EGKEE=0 GRKEE=0
IS SENSE SWITCH 5 ON
YES
NO
SET UP TO READ INPUT ON LINE
READ INPUT
RESET FOR OFF LINE INPUT
IS VARKEE =0
YES
NO
20
23
EJECT A PAGE
BACKSPACE TAPE B9 2 FILES. TURN OFF INDICATOR
MOVE 10 WORDS OF BCD INPUT TO X BCC
WRITE A 20 WORD BCD IDENTIFICATION RECORD ON B9
IS TVAR = BIGNO
YES
NO
WRITE BCD ERROR MESSAGE ON B9
WRITE 3 EOFS ON B9
SET FLAGS=1 TURN ON TRAN VAREQUATIONS
RUN A TRAJECTORY
IS VARKEE =0
YES
NO
WRITE 3 EOFS ON B9
21
20
23
21
IS VARKEE <0
NO
YES
OUTPUT IN OCTAL THE VARIATIONAL EQUATIONS ON B4 AT END POINT
OUTPUT IN BOTH OCTAL AND DECIMAL THE EARTH CENTERED VECTORS ON B4 AT END
OUTPUT IN BOTH OCTAL AND DECIMAL THE EARTH CENTERED VECTORS ON B4 AT END
TSX IDENT
GO TO RONA
21

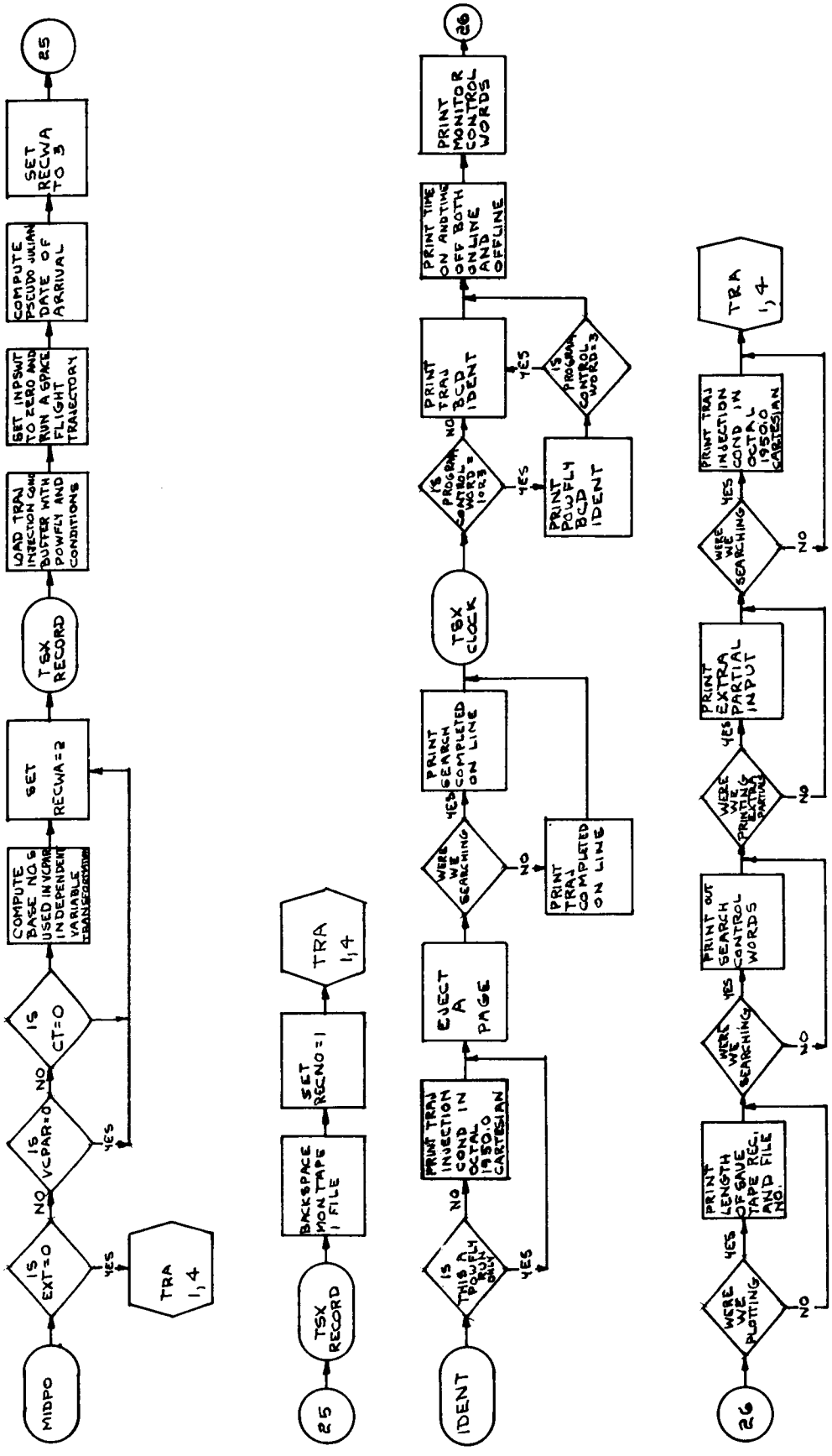
MIDPO
IS EXT=0
YES
TRA 1,4
NO
IS VCPAR=0
YES
NO
IS CT=0
COMPUTE BASE NO. 5 USED IN VCPAR INDEPENDENT VARIABLE TRANSFORMATION
SET RECWA=2
TSX RECORD
LOAD TRAJ INJECTION COND BUFFER WITH POWFLY AND CONDITIONS
SET INPSWT TO ZERO AND RUN A SPACE FLIGHT TRAJECTORY
COMPUTE PSEUDO JULIAN DATE OF ARRIVAL
SET RECWA TO 3
25
25
TSX RECORD
BACKSPACE MON TAPE 1 FILE
SET RECNO=1
TRA 1,4
IDENT
IS THIS A POWFLY ONLY
YES
NO
PRINT TRAJ INJECTION COND IN OCTAL 19500 CARTESIAN
EJECT A PAGE
WERE WE SEARCHING
YES
NO
PRINT SEARCH COMPLETED ON LINE
PRINT TRAJ COMPLETED ON LINE
TSX CLOCK
IS PROGRAM CONTROL WORD=3
YES
NO
PRINT POWFLY BCD IDENT
PRINT TRAJ BCD IDENT
IS PROGRAM CONTROL WORD=3
YES
PRINT TIME ON AND TIME OFF BOTH ON LINE AND OFFLINE
PRINT MONITOR CONTROL WORDS
26
26
WERE WE PLOTTING
YES
NO
PRINT LENGTH OF SAVE TAPE REC. AND FILE NO.
WERE WE SEARCHING
YES
NO
PRINT OUT SEARCH CONTROL WORDS
WERE WE PRINTING PARTIAL
YES
NO
PRINT EXTRA PARTIAL INPUT
WERE WE SEARCHING
YES
NO
PRINT TRAJ INJECTION COND IN OCTAL 19500 CARTESIAN
TRA 1,4

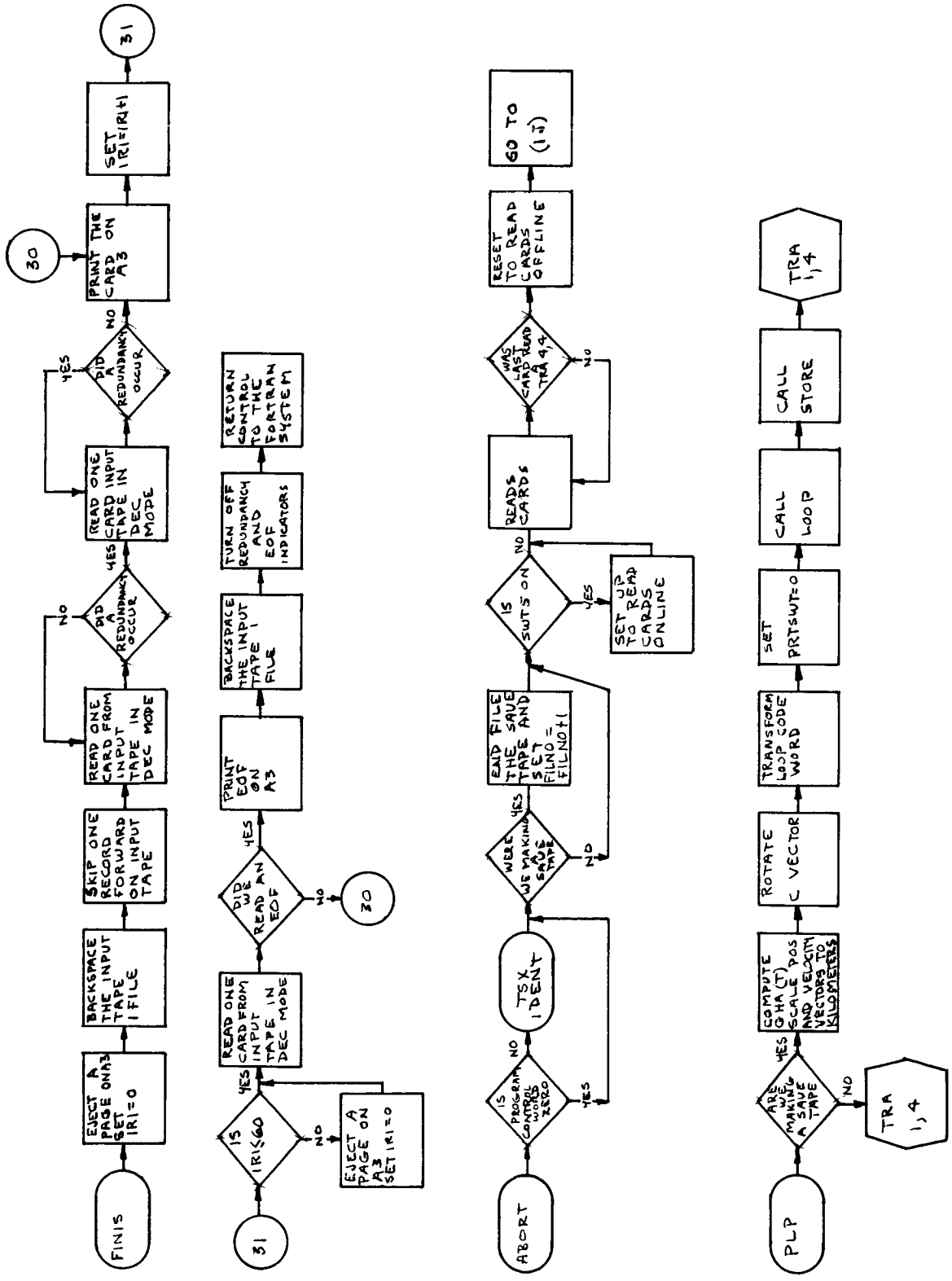
FINIS
EJECT A PAGE ON A3 SET IRI=0
BACKSPACE THE INPUT TAPE 1 FILE
SKIP ONE RECORD FORWARD ON INPUT TAPE
READ ONE CARD FROM INPUT TAPE IN DEC MODE
DID A REDUNDANCY OCCUR
NO
YES
READ ONE CARD INPUT TAPE IN DEC MODE
DID A REDUNDANCY OCCUR
YES
NO
PRINT THE CARD ON A3
30
SET IRI=IRI+1
31
31
IS IRI<60
YES
NO
EJECT A PAGE ON A3 SET IRI=0
READ ONE CARD FROM INPUT TAPE IN DEC MODE
DID WE READ AN EOF
YES
NO
30
PRINT EOF ON A3
BACKSPACE THE INPUT TAPE 1 FILE
TURN OFF REDUNDANCY AND EOF INDICATORS
RETURN CONTROL TO THE FORTRAN SYSTEM
ABORT
IS PROGRAM CONTROL WORD ZERO
NO
YES
TSX IDENT
WERE WE MAKING A SAVE TAPE
YES
NO
END FILE THE SAVE TAPE AND SET FILNO = FILNO+1
IS SWTS ON
NO
YES
SET UP TO READ CARDS ONLINE
READS CARDS
WAS LAST CARD READ TRA 4,4
NO
RESET TO READ CARDS OFFLINE
GO TO (1J)
PLP
ARE WE MAKING A SAVE TAPE
YES
NO
TRA 1,4
COMPUTE QHA (T) SCALE POS AND VELOCITY VECTORS TO KILOMETERS
ROTATE C VECTOR
TRANSFORM LOOP CODE WORD
SET PRTSWT=0
CALL LOOP
CALL STORE
TRA 1,4

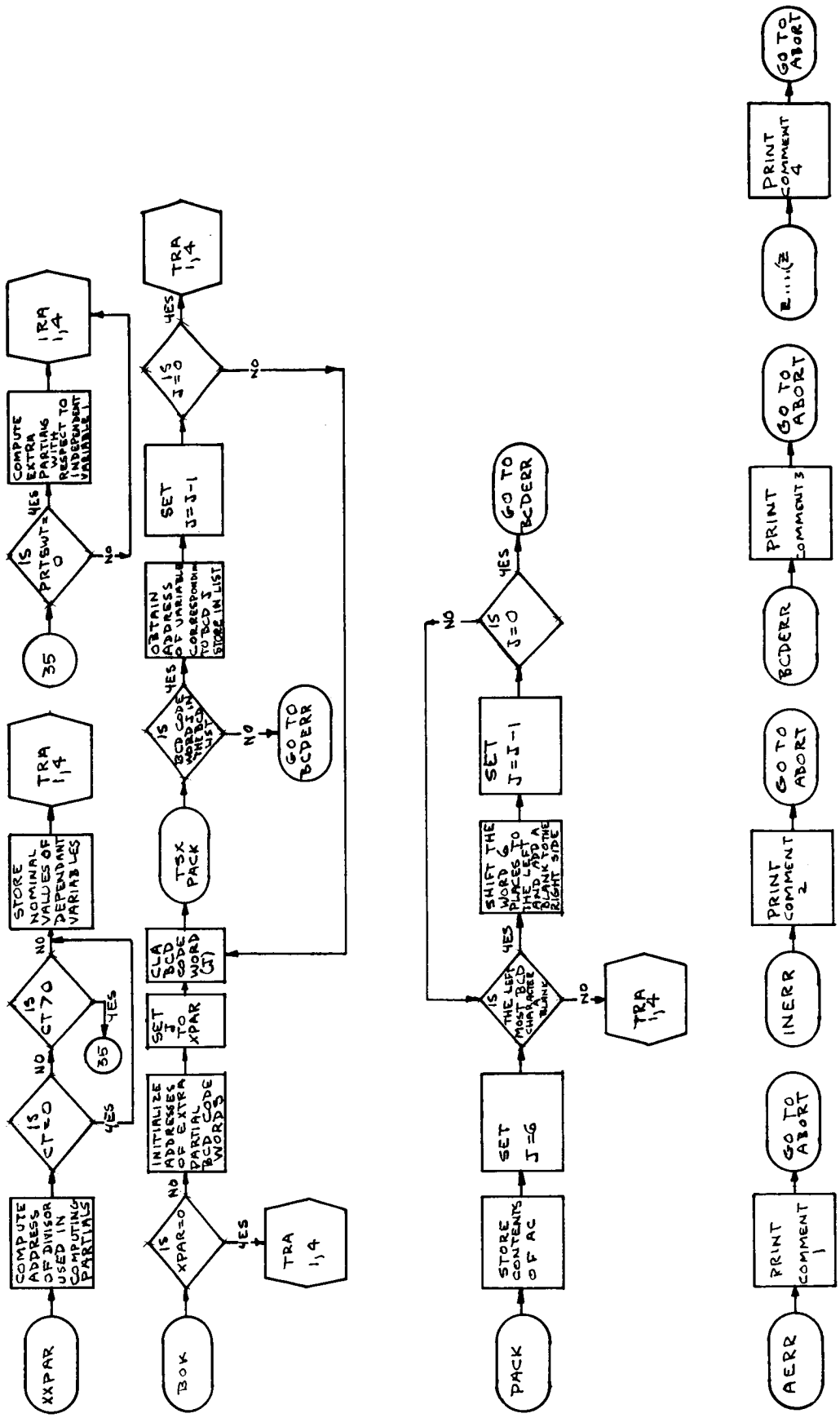

COMMENT 1 JOB ABORTED BECAUSE A WAS INPUT AS ZERO
COMMENT 2 JOB ABORTED DUE TO INPI ERROR RETURN
COMMENT 3 JOB ABORTED DUE TO BCD INPUT ERROR
COMMENT 4 JOB ABORTED BECAUSE OF REDUNDANCIES IN STORE ROUTINE

APPENDIX F. MONITOR SEARCH PARAMETERS

The list of variables that can be searched for by the monitor is given in Table F-1. The Table gives the symbol that must be used on input to the monitor as the name of the independent or dependent variable, the decimal location where the variable is found, and the value of the delta increment. This delta increment is used as an interval within which the variable must lie for convergence, if the variable is a dependent variable. If the variable is an independent variable, then the delta increment is the amount by which the variable is incremented to allow the computation of numerical partials used when searching. The table containing the names of the search variables is called BCD. The name of the table of locations, which is one-to-one with the BCD table, is ADD). The name of the table of increments is RHØ.

Table F-1. Monitor Search Patterns

Symbol	Description	Units	Symbol or Decimal Location	Increment Value
X	Rectangular position vector components measured either with respect to the ecliptic or equator in a true of-date or 1950.0 vernal equinox inertial frame.	km	X1	100.0
Y		km	Y1	100.0
Z		km	Z1	100.0
X.	Rectangular velocity vector components, measured in the same frames possible for the position vector above.	km/sec	X1.	0.010
Y.		km/sec	Y1.	0.010
Z.		km/sec	Z1.	0.010
R	This spherical set is either Earth-centered inertial, Earth-centered Earth-fixed, or Moon-centered Moon-fixed. For the Earth-centered inertial, the vernal equinox direction can be true of-date or 1950.0.	km	X1	100.0
PHI		deg	Y1	0.20
THETA		deg	Z1	0.20
V		km/sec	X1.	0.005
GAM		deg	Y1.	0.20
SIGMA		deg	Z1.	0.20
SIG(L)	This is the energy asymptote searching set described in Ref. 2. SIG(L) is the launch azimuth. R(L) is the range from the center of Earth to spacecraft. GAM(L) is the flight-path angle measured from the local horizontal at injection time. C3(S) is the energy constant from the Earth-centered conic at injection time. PHI(S) is the right ascension of the outgoing asymptote. TH(S) is the declination of the outgoing asymptote.	deg	X1	0.10
R(L)		km	Y1	100.0
GAM(L)		deg	Z1	0.10
C3(S)		km^2/sec^2	X1.	0.0001
PHI(S)		deg	Y1.	0.10
TH(S)		deg	Z1.	0.10
T	The third word of injection time (added to the sexagesimal injection time to give the true injection time).	sec	138	100.0

Table F-1. Monitor Searth Patterns (Cont'd)

Symbol	Description	Units	Symbol or Decimal Location	Increment Value
MYX	The x and y components of the plumb-line initial position vector for the Powered Flight Program.	meters	363	50.0
MYY		meters	364	50.0
MYX.	The x and y components of the plumb-line initial velocity vector for the Powered Flight Program.	m/sec	366	25.0
MYY.		m/sec	367	25.0
ENERGY	The energy shut-off for the third motor energy.	m^2/sec^2	693	1.0×10^5
CHIBR1	These are the four available constant chi values of the Powered Flight Program. $\bar{\chi}_i, i = 1,4$	deg	382	0.01
CHIBR2		deg	383	0.01
CHIBR3		deg	384	0.01
CHIBR4		deg	385	0.01
MU1	These are the four constant μ's which allow control from the local horizon in the Powered Flight Program.	deg	370	0.01
MU2		deg	371	0.01
MU3		deg	372	0.01
MU4		deg	373	0.01
DLCHI1	These are the four available $\Delta\chi$'s in the Powered Flight Program.	deg	386	0.01
DLCHI2		deg	387	0.01
DLCHI3		deg	388	0.01
DLCH14		deg	389	0.01
ANATP1	These are the linear and constant coefficients, respectively, of the angle of attack in pitch polynomial in the Powered Flight Program.	deg/sec	490	0.01
ANATP2		deg	491	0.01
ANATY1	These are the linear and constant coefficients of the angle of attack in yaw polynomial in the Powered Flight Program.	deg/sec	497	0.01
ANATY0		deg	498	0.01

Table F-1. Monitor Search Patterns (Cont'd)

Symbol	Description	Units	Symbol or Decimal Location	Increment Value
C1M1	These are the linear and constant coefficients of the X-polynomials in the Powered Flight Program by motor for six motors. The first digit corresponds to the subscript of the coefficients in the polynomial and the second number corresponds to the motor number.	deg/sec	705	0.01
C0M1		deg	706	0.01
C1M2		deg/sec	712	0.01
C0M2		deg	713	0.01
C1M3		deg/sec	719	0.01
C0M3		deg	720	0.01
C1M4		deg/sec	726	0.01
C0M4		deg	727	0.01
C1M5		deg/sec	733	0.01
C0M5		deg	734	0.01
C1M6		deg/sec	740	0.01
C0M6		deg	741	0.01
TBM1	These are the burn times and coast times for six motors for Powered Flight Program.	sec	909	0.04
TCM1		sec	911	4.0
TBM2		sec	921	0.04
TCM2		sec	923	4.0
TBM3		sec	933	0.04
TCM3		sec	935	4.0
TBM4		sec	945	0.04
TCM4		sec	947	4.0
TBM5		sec	957	0.04
TCM5		sec	959	4.0
TBM6		sec	971	0.04
TCM6		sec	973	4.0
TMLNCH	Time past midnight of the day of launch for the Powered Flight Program's initial time.	sec	393	40.0
B.T	The components of the $\overline{B}$ vector from the target conic in the Space Trajectory Program where the $\overline{T}$ vector is referenced to the plane defined by the input given in 167_{10}.	km	GRUB6	3.0
B.R		km	GRUB6+1	3.0
C3	The energy constant of the vis viva integral from target conic in the Space Trajectory Program.	km^2/sec^2	GRUB5+2	1.0×10^{-6}

Table F-1. Monitor Search Patterns (Cont'd)

Symbol	Description	Units	Symbol or Decimal Location	Increment Value
V(H)	Target conic's hyperbolic excess velocity in the Space Trajectory Program.	km/sec	GRUB5+5	0.01
T(F)	Time of flight when the target is a planet in the Space Trajectory Program.	days	TT+2	0.25
T(F)M	Time of flight when the target is the Moon in the Space Trajectory Program.	hours	TT+2	0.25
LNGTD	Earth longitude at the end of the powered flight integration.	deg	75536_8	0.01
SPARTA	Right ascension at the end of the powered flight integration of the outgoing asymptote.	deg	76475_8	0.001
SPADC	Declination at the end of the powered flight integration of the outgoing asymptote.	deg	76474_8	0.001
GAMMA	Flight-path angle at the end of the Powered Flight Program.	deg	75524_8	0.01
RADIUS	Radius from center of Earth to spacecraft at end of Powered Flight Program.	meters	75517_8	100.0

Table F-1. Monitor Search Patterns (Cont'd)

Symbol	Description	Units	Symbol or Decimal Location	Increment Value
DIFDC DIFRA	Difference $\Theta_p - \Theta'_p$ and $\Phi_p - \Phi'_p$ respectively where $\Theta'_p = \Theta_0 + A(\Delta t) + B(\Delta t)$ $\Phi'_p = \Phi_p + D(\Delta t) + E(\Delta t)$ also $\Delta t = t_I - t_{Is}$, and Θ_0, Φ_0, A, B, D, E, t_{Is} are input. t_I is injection time.	deg deg	75551_8 75552_8	5.0×10^{-4} 5.0×10^{-4}
ALTITU	The altitude above the local horizontal at the end of Powered Flight Program.	meters	75644_8	100.0
T(F)L	Linearized time of flight for the Space Trajectory Program. Days for planetary case, hours for lunar case.	days or hours	T(F)L	0.025
SELØN SELAT	Selenographic latitude and longitude for the Space Trajectory Program.	deg deg	TGSPH+2 TGSPH+1	0.10 0.10
JULD	Modified Julian date: number of days past 12 hours March 6, 1960 (J.D. 2437000.0)	days	EPOCH	0.00333
LATIT	Geocentric latitude in Space Trajectory Program.	deg	74070_8	0.10
LONGY	Geocentric longitude in Space Trajectory Program.	deg	74071_8	0.10

APPENDIX G. TEST CASES

Check Case 1

Check case 1 is an Earth-Moon trajectory using the EXTEND option, i.e., Powered Flight, then Space Trajectory Program. The spacecraft injects on January 13, 1963, and impacts the Moon at a lunar latitude of -7.01 deg and a lunar longitude of 297.7 deg and a flight time of 66.09 hr.

It is desirable to know when the spacecraft could be seen and when the extreme elevation occurred with respect to three of JPL's DSIF (Deep Space Instrumentation Facility) tracking stations. These three events make up a view period and were requested by input.

Frequent printing was also requested by input.

The approximate running time on an IBM 7094 is 3 min.

ADR,1011010,45013120 1 012105 011010 + 06/28/63 **********

CHECK CASE 1

```
*       HIT START AFTER OCTAL 150 STOP
*       XEQ
```

ENTRY NAME	ENTRY ADD.	NO. OF TRANSFERS	LOAD ADD.
MAIN	00144	00000	00144

LOGICAL TAPE	MACHINE TAPE	TOTAL WRITES	TOTAL READS	NOISE RECORDS WRITING	NOISE RECORDS READING	TOTAL REDUNDANCIES WRITING	TOTAL REDUNDANCIES READING	POSITIONING ERRORS
1	A 1	0	5	0	0	0	0	0
5	A 2	0	11	0	0	0	0	0
6	A 3	15	0	0	0	0	0	0
7	B 4	6	5	0	0	0	0	0

EXECUTION

EARTH-MOON EXTEND,VIEW PERIODS,FINE PRINT CHECK 1

```
                                                                                                                  PAGE  1
POWER FLIGHT TRAJECTORY                                                                                     EGGNOG
IDENT    5.555              EARTH-MOON EXTEND,VIEW PERIODS,FINE PRINT              CHECK 1            OCTOBER 11

LAUNCH CONDITIONS
AZI.10200000 03 LAT.28317510 02 GED.28480312 02 LON.27945775 03 RAD.63733216 07
LAUNCH DATE   1 13 1963 JDT.24380425 07 GHA.11175336 03 TL .65896425 05      JANUARY 13,1963       18  18  16.426
GME .39860319 15 RE .63781650 07 D .78749999-05 H-.57499999-05 J .16234500-02        RA2 - MARINER CONSTANTS

 PSUEDO S CONSTANTS
 RAO  .00000000 00 DEO  .00000000 00 A  .00000000 00 B  .00000000 00 D  .00000000 00 E.00000000 00   TIS  .00000000 00

CONTROL FROM HORIZON .00000000 00


   MTR  1            FRC .00000000 00 FE  .00000000 00 WG  .74180000 04 WPD .00000000 00 DIA          .000
   BRN .00000000 00 CST .83589154 03

  PROBE OUT OF SHADOW

                                                                                  JANUARY 13,1963       18  26  35.338

   TIM .49891306 03 ACX-.00000000 00 INA .00000000 00 DDX-.29662051-02 DDY-.87764972-02 DDZ .49338241-04
   XP  .20997157 04 YP -.15760293 03 ZP -.45791734 02 DXP .73852953 01 DYP-.25001511 01 DZP-.10255636 00
   R   .65620315 04 LAT .23377425 02 LON .29740607 03 VE  .73865994 01 PTE-.29141030-02 AZE .11121499 03
   ALT .18724412 03 RNG .20766772 04 ARC .18667057 02 V   .77976829 01 PTH-.27604688-02 AZ  .11004702 03
   GED .23519483 02 F  -.00000000 00 DRG .00000000 00 N   .00000000 00 CHI .34130021 03 TAU .00000000 00
   XM  .00000000 00 YM  .00000000 00 ZM  .00000000 00 DXM .00000000 00 DYM .00000000 00 DZM .00000000 00
   XDD-.00000000 00 YDD .00000000 00 ZDD .00000000 00 ALA .11680162 01 W   .74179999 04 PAY .74180000 04
   X   .50265098 04 Y  -.33188968 04 Z   .26037239 04 DX  .49210201 01 DY  .55287203 01 DZ -.24537047 01
   DT  .00000000 00 DTP .00000000 00 DW  .00000000 00 C3 -.60683882 02 MCH .22031136 02 BTM .00000000 00

                                                                                  JANUARY 13,1963       18  26  35.338

   TIM .49891306 03 ACX-.00000000 00 INA .00000000 00 DDX-.29662051-02 DDY-.87764972-02 DDZ .49338241-04
   XP  .20997157 04 YP -.15760293 03 ZP -.45791734 02 DXP .73852953 01 DYP-.25001511 01 DZP-.10255636 00
   R   .65620315 04 LAT .23377425 02 LON .29740607 03 VE  .73865994 01 PTE-.29141030-02 AZE .11121499 03
   ALT .18724412 03 RNG .20766772 04 ARC .18667057 02 V   .77976829 01 PTH-.27604688-02 AZ  .11004702 03
   GED .23519483 02 F  -.00000000 00 DRG .00000000 00 N   .00000000 00 CHI .34130021 03 TAU .00000000 00
   XM  .00000000 00 YM  .00000000 00 ZM  .00000000 00 DXM .00000000 00 DYM .00000000 00 DZM .00000000 00
   XDD-.00000000 00 YDD .00000000 00 ZDD .00000000 00 ALA .11680162 01 W   .74179999 04 PAY .74180000 04
   X   .50265098 04 Y  -.33188968 04 Z   .26037239 04 DX  .49210201 01 DY  .55287203 01 DZ -.24537047 01
   DT  .20000000 01 DTP .20000000 01 DW  .00000000 00 C3 -.60683882 02 MCH .22031136 02 BTM .00000000 00

                                                                                  JANUARY 13,1963       18  26  35.338

   TIM .49891306 03 ACX-.00000000 00 INA .00000000 00 DDX-.29662051-02 DDY-.87764972-02 DDZ .49338241-04
   XP  .20997157 04 YP -.15760293 03 ZP -.45791734 02 DXP .73852953 01 DYP-.25001511 01 DZP-.10255636 00
   R   .65620315 04 LAT .23377425 02 LON .29740607 03 VE  .73865994 01 PTE-.29141030-02 AZE .11121499 03
   ALT .18724412 03 RNG .20766772 04 ARC .18667057 02 V   .77976829 01 PTH-.27604688-02 AZ  .11004702 03
   GED .23519483 02 F  -.00000000 00 DRG .00000000 00 N   .00000000 00 CHI .34130021 03 TAU .00000000 00
   XM  .00000000 00 YM  .00000000 00 ZM  .00000000 00 DXM .00000000 00 DYM .00000000 00 DZM .00000000 00
   XDD-.00000000 00 YDD .00000000 00 ZDD .00000000 00 ALA .11680162 01 W   .74179999 04 PAY .74180000 04
   X   .50265098 04 Y  -.33188968 04 Z   .26037239 04 DX  .49210201 01 DY  .55287203 01 DZ -.24537047 01
   DT  .20000000 01 DTP .20000000 01 DW  .00000000 00 C3 -.60683882 02 MCH .22031136 02 BTM .00000000 00

COAST CONDITIONS
```

```
CONTROL FROM HORIZON .00000000 00

   MTR  2            FRC .16000000 05 FE  .00000000 00 WG  .73500000 04 WPD .54600000 02 DIA        5.000
   BRN .10000000 03 CST .00000000 00

                                                                          JANUARY 13,1963      18  40  31.229

   TIM .13348046 04 ACX .21346825-01 INA .00000000 00 DDX-.36786410-02 DDY-.22979857-01 DDZ .51178388-04
   XP  .63521125 04 YP -.47435619 04 ZP -.10328960 03 DXP .19369850 01 DYP-.75551355 01 DZP-.25061068-01
   R   .65620527 04 LAT-.27148482 01 LON .34590631 03 VE  .73909499 01 PTE .61874534-03 AZE .12221018 03
   ALT .18389512 03 RNG .84112578 04 ARC .75588027 02 V   .77995263 01 PTH .58642663-03 AZ  .12033826 03
   GED-.27333213 01 F   .16000000 05 DRG .00000000 00 N   .00000000 00 CHI .28437918 03 TAU .00000000 00
   XM  .00000000 00 YM -.00000000 00 ZM -.00000000 00 DXM .00000000 00 DYM-.00000000 00 DZM-.00000000 00
   XDD .53011975-02 YDD-.20677996-01 ZDD-.68587756-04 ALA .18719072 01 W   .73499999 04 PAY .73500000 04
   X   .62139025 04 Y   .20859871 04 Z  -.31081384 03 DX -.23190616 01 DY  .63221131 01 DZ -.39351553 01
   DT  .10000000 02 DTP .58915367 01 DW  .54600000 02 C3 -.60654738 02 MCH .22044112 02 BTM .00000000 00

                                                                          JANUARY 13,1963      18  42   1.291

   TIM .14248661 04 ACX .64549705-01 INA .31781310 01 DDX-.10553452-02 DDY-.65172757-01 DDZ .18597277-04
   XP  .65137719 04 YP -.55466181 04 ZP -.10536663 03 DXP .16891096 01 DYP-.10838243 02 DZP-.21515811-01
   R   .65703399 04 LAT-.63045838 01 LON .35173643 03 VE  .10558884 02 PTE .16941131 01 AZE .12113532 03
   ALT .19239569 03 RNG .92069843 04 ARC .82740231 02 V   .10969095 02 PTH .16307409 01 AZ  .11984851 03
   GED-.63471987 01 F   .16000000 05 DRG .00000000 00 N   .00000000 00 CHI .27722752 03 TAU .00000000 00
   XM  .23936765 02 YM -.11469942 03 ZM -.30773958 00 DXM .57064736 00 DYM-.31240231 01 DZM-.73013783-02
   XDD .81176922-02 YDD-.64010802-01 ZDD-.10210754-03 ALA .13662497 01 W   .24326419 04 PAY .24326420 04
   X   .59300958 04 Y   .27354608 04 Z  -.72151412 03 DX -.42459197 01 DY  .85145906 01 DZ -.54584759 01
   DT  .20000000 01 DTP .34232784-03 DW  .54600000 02 C3 -.10130600 01 MCH .31492734 02 BTM .90061492 02

   CONIC - ELLIPSE
   MOM  .72041494 11 ENR -.50652999 06 ECC  .98331495 00 AXS  .39346454 09 PER  .24562236 07 ANM  .32890612 01
   APO  .78036410 09 PGE  .65649741 07 VAP  .92317804 02 VPG  .10973615 05 TPG -.34453174 08 EAN  .30180263 00
   SPX -.97608375 00 SPY -.21692010 00 SPZ -.14358977-01 TI   .67321291 05 RAP  .19252958 03 ERA -.19252958 03
   TTP  .13726455 06 CHD  .38637461 09 GCA  .16586068 03                    DEP -.82269286 00 EDE  .82269286 0

INJECTION TIME =       .67321291 05
```

```
CASE  1                                          SPACE TRAJECTORIES                                                  1

EARTH-MOON EXTEND,VIEW PERIODS,FINE PRINT              CHECK 1
 EPHEMERIS TAPE III WITH SATURN.          B-8 IS T-1456

  GME  .39860320 06     J  .16234500-02     H -.57499999-05     D  .78749999-05     RE  .63781650 04    REM  .63783149 04
    G  .66709998-19     A  .88745998 29     B  .88763998 29     C  .88800998 29    OME  .41780741-02     AU  .14959900 09
  GMM  .49007589 04   GMS  .13271544 12   GMV  .32476950 06   GMA  .42977799 05    GMC  .37918700 08    GMJ  .12671060 09

INJECTION CONDITIONS              MOON              JULIAN DATE 2438043.27918161              JAN. 13,1963   18 42 01.291

GEOCENTRIC        X0 .59300958 04  Y0 .27354608 04  Z0-.72151412 03 DX0-.42459197 01 DY0 .85145906 01 DZ0-.54584759 01
CARTESIAN        GMC .00000000 00 SGC .00000000 00  TO .67321291 05 GHA .33026697 02 GHO .11175336 03

   0 DAYS  0 HRS.  0 MIN.  0.000 SEC.              JULIAN DATE 2438043.27918161              JAN. 13,1963   18 42 01.291
                                                TFL    0 DAYS 18 HRS. 42 MIN.  1.291 SEC.

        GEOCENTRIC                                                                                  EQUATORIAL COORDINATES

    X  .59300955 04     Y  .27354607 04     Z -.72151410 03    DX -.42459195 01    DY  .85145900 01    DZ -.54584756 01
    R  .65703394 04   DEC -.63045838 01    RA  .24763141 02     V  .10969094 02   PTH  .16307401 01    AZ  .11984851 03
    R  .65703394 04   LAT -.63045847 01   LON  .35173644 03    VE  .10558883 02   PTE  .16941131 01   AZE  .12113531 03
   XS  .57181167 08    YS -.12437834 09    ZS -.53933080 08   DXS  .27928673 02   DYS  .10710413 02   DZS  .46452790 01
   XM -.36756342 06    YM  .12677923 06    ZM  .79800126 05   DXM -.40581216 00   DYM -.85550327 00   DZM -.29049932 00
   XT -.36756342 06    YT  .12677923 06    ZT  .79800126 05   DXT -.40581216 00   DYT -.85550327 00   DZT -.29049932 00
   RS  .14713407 09    VS  .30270487 02    RM  .39691800 06    VM  .99043383 00    RT  .39691800 06    VT  .99043383 00
  GED -.63471995 01   ALT  .19239343 03   LOS  .26166323 03   RAS  .29468993 03   RAM  .16096976 03   LOM  .12794306 03
  DUT  .35000000 02    DT  .15000000 02    DR  .31215809 00   SHA -.65653223 04   DES -.21503457 02   DEM  .11598332 02
  DAC  .00000000 00

                                                   GEOCENTRIC CONIC

EPOCH OF PERICENTER PASSAGE                       JULIAN DATE 2438043.27878388              JAN. 13,1963   18 41 26.929
  SMA  .39345021 06   ECC  .98331434 00     B  .71574318 05   SLR  .13020405 05   APO  .78033544 06   RCA  .65649731 04
   VH  .92321169-01    C3 -.10130969 01    C1  .72041482 05   TFP  .34362325 02    TF -.95450903-02   PER  .40934822 05
   TA  .32891629 01   MTA  .00000000 00    EA  .30177098 00    MA  .50366397-02   C3J -.12662544 01   TFI  .00000000 00

                                                                ALL VECTORS REFERENCED TO EARTH EQUATOR PLANE
    X  .59300955 04     Y  .27354607 04     Z -.72151410 03    DX -.42459195 01    DY  .85145900 01    DZ -.54584756 01
  INC  .30446937 02   LAN  .19392942 03   APF  .18922648 03    MX -.41293236 00    MY  .76469622 00    MZ -.49469847 00
   WX -.12198595 00    WY  .49183847 00    WZ  .86209882 00    PX  .92476065 00    PY  .37177430 00    PZ -.81249502-01
   QX -.36046782 00    QY  .78732377 00    QZ -.50018410 00    RX -.75385586-01    RY -.30306679-01    RZ -.99669373 00
   BX  .36046784 00    BY -.78732381 00    BZ  .50018413 00    TX  .37300757 00    TY -.92782830 00    TZ  .00000000 00
  DAP -.46603908 01   RAP  .21901223 02
  B.T  .61908818 05   B.R -.35919091 05     B  .71574318 05   THA  .32987797 03

                                                                ALL VECTORS REFERENCED TO ORBIT PLANE OF TARGET
    X  .58766831 04     Y -.26967729 04     Z -.11667774 04    DX  .17808568 01    DY  .67729554 01    DZ -.84425498 01
  INC  .51745304 02   LAN  .14717011 03   APF  .18978093 03    MX -.33023739 00    MY  .60557563 00    MZ -.41830222 00
   WX  .42572933 00    WY  .65984661 00    WZ  .61915828 00    PX  .88509492 00    PY -.44588194 00    PZ -.13340236 00
   QX  .18804641 00    QY  .60480715 00    QZ -.77385191 00    RX -.11913862 00    RY  .60018150-01    RZ -.99106191 00
   BX -.18804641 00    BY -.60480718 00    BZ  .77385194 00    TX -.44990322 00    TY -.89307732 00    TZ  .00000000 00
  DAP -.76662469 01   RAP  .33326252 03
  B.T  .44715264 05   B.R -.55887150 05     B  .71573939 05   THA  .30866328 03

   0 DAYS  0 HRS.  4 MIN.  2.110 SEC.              JULIAN DATE 2438043.28198380              JAN. 13,1963   18 46 03.401
                                                TFL    0 DAYS 18 HRS. 46 MIN.  3.400 SEC.

                                                START OF VIEW PERIOD
```

```
CASE  1                                                  SPACE TRAJECTORIES                                                  2

EARTH-MOON EXTEND,VIEW PERIODS,FINE PRINT                CHECK 1
JOBJET                    1   UNIFORM TIME     TAU .00000000 00
   R        .69005649 04          LAT      -.16822468 02          LONG      .10848877 02
   MIN    .40351716 01  HA      .73160980 02  DEC     .21098436 02  ELE     .49999998 01  AZI     .29631491 03
   CKM    .14884072 03  CKC     .66232965 02  CKT     .14884072 03  PSS     .67674977 02  PSM     .14629770 03
   UT     .67252859-01  DHA    -.16410076 00  DDE    -.58800323-01  DEL     .16196072 00  DAZ     .25901840-01
   ET     .57530636-01  RGE     .21424169 04  DRG    -.82499814 01  DDR     .15077429-01  SLS     .15871215 03
   RDI    .63754947 04  PHI    -.25734820 02  THI     .27684780 02  SPS     .67675751 02  POL     .24573354 03
   DT     .71463325-02  RF1     .00000000 00  RF2     .00000000 00  BF1     .17641624 06
   ESS1  -.69312151 02  ESS2   -.92912151 02  F1      .75997709 05  F2      .47160823 05  PRA     .34856204 03
   RF     .00000000 00  DOP    -.96562333-04

   0 DAYS  0 HRS.  8 MIN.  1.972 SEC.                JULIAN DATE 2438043.28475998                JAN. 13,1963   18 50 03.263
                                                TFL     0 DAYS 18 HRS. 50 MIN.  3.263 SEC.

                                                        EXTREME ELEVATION

JOBJET                    1   UNIFORM TIME     TAU .00000000 00
   R        .76518577 04          LAT      -.24110533 02          LONG      .28489193 02
   MIN    .80328725 01  HA      .35548044 03  DEC    -.16028759 02  ELE     .79418105 02  AZI     .24356683 02
   CKM    .21890639 03  CKC     .13665106 03  CKT     .21890639 03  PSS     .12023315 03  PSM     .97642679 02
   UT     .13388121 00  DHA    -.37857510 00  DDE    -.15249649 00  DEL     .64597113-07  DAZ     .21483230 01
   ET     .12415898 00  RGE     .12946866 04  DRG     .38547273 01  DDR     .55842293-01  SLS     .15433736 03
   RDI    .63754947 04  PHI    -.25734820 02  THI     .27684780 02  SPS     .12023359 03  POL     .33024227 03
   DT     .43186088-02  RF1     .00000000 00  RF2     .00000000 00  BF1     .13764830 06
   ESS1  -.64937364 02  ESS2   -.88537364 02  F1      .11352539 06  F2      .12468861 06  PRA     .67244743 02
   RF     .00000000 00  DOP    -.35763804-03

   0 DAYS  0 HRS. 26 MIN.  8.467 SEC.                JULIAN DATE 2438043.29733516                JAN. 13,1963   19 08 09.759
                                                TFL     0 DAYS 19 HRS.  8 MIN.  9.758 SEC.

                                                        START OF VIEW PERIOD

OOMJET                    1   UNIFORM TIME     TAU .00000000 00
   R        .13113034 05          LAT      -.29947503 02          LONG      .75550429 02
   MIN    .26141125 02  HA      .90000000 02  DEC    -.18022805 02  ELE     .92261895 01  AZI     .25444999 03
   CKM    .23575098 03  CKC     .15458864 03  CKT     .23575098 03  PSS     .13176160 03  PSM     .79444923 02
   UT     .43568541 00  DHA    -.37117536-01  DDE    -.80286421-02  DEL     .34591147-01  DAZ     .10804712-01
   ET     .42596319 00  RGE     .10484153 05  DRG     .27350831 01  DDR     .30966599-02  SLS     .17250474 03
   RDI    .63726076 04  PHI    -.31212360 02  THI     .13688617 03  SPS     .13176464 03  POL     .26377106 03
   DT     .34971366-01  RF1     .00000000 00  RF2     .00000000 00  BF1     .14123420 06
   ESS1  -.82604738 02  ESS2   -.10620474 03  F1      .11007473 06  F2      .11751756 06  PRA     .86466035 02
   RF     .00000000 00  DOP    -.19832341-04

   0 DAYS  0 HRS. 30 MIN.  0.000 SEC.                JULIAN DATE 2438043.30001494                JAN. 13,1963   19 12 01.291
                                                TFL     0 DAYS 19 HRS. 12 MIN.  1.291 SEC.
```

CASE 1 SPACE TRAJECTORIES 3

EARTH-MOON EXTEND,VIEW PERIODS,FINE PRINT CHECK 1

GEOCENTRIC EQUATORIAL COORDINATES

X	-.64377760 04	Y	.10748299 05	Z	-.70364769 04	DX	-.68642294 01	DY	.18130331 01	DZ	-.20007785 01
R	.14369513 05	DEC	-.29319615 02	RA	.12091982 03	V	.73761676 01	PTH	.47189160 02	AZ	.81460838 02
R	.14369513 05	LAT	-.29319615 02	LON	.80372589 02	VE	.67959347 01	PTE	.52772131 02	AZE	.79570007 02
XS	.57231436 08	YS	-.12435905 09	ZS	-.53924714 08	DXS	.27924435 02	DYS	.10719724 02	DZS	.46493125 01
XM	-.36829004 06	YM	.12523804 06	ZM	.79276407 05	DXM	-.40153683 00	DYM	-.85692295 00	DZM	-.29140590 00
XT	-.36829004 06	YT	.12523804 06	ZT	.79276407 05	DXT	-.40153683 00	DYT	-.85692295 00	DZT	-.29140590 00
RS	.14713424 09	VS	.30270491 02	RM	.39699731 06	VM	.99018490 00	RT	.39699731 06	VT	.99018490 00
GED	-.29486050 02	ALT	.79964845 04	LOS	.25416519 03	RAS	.29471242 03	RAM	.16121925 03	LOM	.12067202 03
DUT	.35000000 02	DT	.12000000 03	DR	.54111664 01	SHA	.11194027 05	DES	-.21499928 02	DEM	.11518834 02
DAC	.00000000 00										

GEOCENTRIC CONIC

EPOCH OF PERICENTER PASSAGE JULIAN DATE 2438043.27878600 JAN. 13,1963 18 41 27.111

SMA	.37212086 06	ECC	.98235504 00	B	.69596140 05	SLR	.13016257 05	APO	.73767565 06	RCA	.65660574 04
VH	.97644542-01	C3	-.10711660 01	C1	.72030006 05	TFP	.18341800 04	TF	-.94944461-02	PER	.37651670 05
TA	.95501220 02	MTA	.00000000 00	EA	.11859884 02	MA	.29228663 00	C3J	-.13253169 01	TFI	.50000000 00

ALL VECTORS REFERENCED TO EARTH EQUATOR PLANE

X	-.64377760 04	Y	.10748299 05	Z	-.70364769 04	DX	-.68642294 01	DY	.18130331 01	DZ	-.20007785 01
INC	.30431387 02	LAN	.19387282 03	APF	.18930809 03	MX	-.88573854 00	MY	-.44576466 00	MZ	.12946458 00
WX	-.12144383 00	WY	.49173155 00	WZ	.86223632 00	PX	.92460895 00	PY	.37200364 00	PZ	-.81924023-01
QX	-.36103967 00	QY	.78728226 00	QZ	-.49983695 00	RX	-.76003166-01	RY	-.30578823-01	RZ	-.99663856 00
BX	.36103968 00	BY	-.78728227 00	BZ	.49983696 00	TX	.37325833 00	TY	-.92772745 00	TZ	.00000000 00
DAP	-.46991675 01	RAP	.21916709 02								
B.T	.60210714 05	B.R	-.34904050 05	B	.69596140 05	THA	.32989920 03				

ALL VECTORS REFERENCED TO ORBIT PLANE OF TARGET

X	.14238228 04	Y	.92783381 04	Z	-.10879708 05	DX	-.39785044 01	DY	.54073990 01	DZ	-.30560404 01
INC	.51729993 02	LAN	.14739034 03	APF	.18983644 03	MX	-.78712814 00	MY	-.70302635-01	MZ	.61276702 00
WX	.42310074 00	WY	.66133869 00	WZ	.61936811 00	PX	.88700103 00	PY	-.44185963 00	PZ	-.13412368 00
QX	.18497257 00	QY	.60612802 00	QZ	-.77355926 00	RX	-.12005257 00	RY	.59804197-01	RZ	-.99096455 00
BX	-.18497258 00	BY	-.60612804 00	BZ	.77355928 00	TX	-.44588843 00	TY	-.89508855 00	TZ	.00000000 00
DAP	-.77079503 01	RAP	.33351981 03								
B.T	.43498544 05	B.R	-.54327464 05	B	.69595955 05	THA	.30868332 03				

0 DAYS 1 HRS. 0 MIN. 0.000 SEC. JULIAN DATE 2438043.32084827 JAN. 13,1963 19 42 01.291

TFL 0 DAYS 19 HRS. 42 MIN. 1.291 SEC.

GEOCENTRIC EQUATORIAL COORDINATES

X	-.17560310 05	Y	.12524342 05	Z	-.96154481 04	DX	-.56012501 01	DY	.45813888 00	DZ	-.10498041 01
R	.23615259 05	DEC	-.24027243 02	RA	.14450282 03	V	.57171655 01	PTH	.57756530 02	AZ	.70737227 02
R	.23615259 05	LAT	-.24027243 02	LON	.96435055 02	VE	.51090106 01	PTE	.71167743 02	AZE	.52398766 02
XS	.57281698 08	YS	-.12433975 09	ZS	-.53916341 08	DXS	.27920193 02	DYS	.10729033 02	DZS	.46533455 01
XM	-.36900895 06	YM	.12369431 06	ZM	.78751065 05	DXM	-.39725554 00	DYM	-.85832395 00	DZM	-.29230589 00
XT	-.36900895 06	YT	.12369431 06	ZT	.78751065 05	DXT	-.39725554 00	DYT	-.85832395 00	DZT	-.29230589 00
RS	.14713442 09	VS	.30270496 02	RM	.39707634 06	VM	.98993670 00	RT	.39707634 06	VT	.98993670 00
GED	-.24172287 02	ALT	.17240633 05	LOS	.24666714 03	RAS	.29473490 03	RAM	.16146849 03	LOM	.11340073 03
DUT	.35000000 02	DT	.24000000 03	DR	.48355138 01	SHA	.19093288 05	DES	-.21496397 02	DEM	.11439160 02
DAC	.00000000 00										

GEOCENTRIC CONIC

EPOCH OF PERICENTER PASSAGE JULIAN DATE 2438043.27878547 JAN. 13,1963 18 41 27.065

CASE 1 SPACE TRAJECTORIES 4

EARTH-MOON EXTEND,VIEW PERIODS,FINE PRINT CHECK 1

SMA	.37178871 06	ECC	.98233838 00	B	.69566545 05	SLR	.13016808 05	APO	.73701102 06	RCA	.65663905 04
VH	.97734668-01	C3	-.10721229 01	C1	.72031530 05	TFP	.36342265 04	TF	-.95073580-02	PER	.37601270 05
TA	.11718504 03	MTA	.00000000 00	EA	.17575626 02	MA	.57991016 00	C3J	-.13247180 01	TFI	.10000000 01

ALL VECTORS REFERENCED TO EARTH EQUATOR PLANE

X	-.17560310 05	Y	.12524342 05	Z	-.96154481 04	DX	-.56012501 01	DY	.45813888 00	DZ	-.10498041 01
INC	.30433410 02	LAN	.19386406 03	APF	.18931723 03	MX	-.65751559 00	MY	-.69056650 00	MZ	.30131578 00
WX	-.12137594 00	WY	.49177971 00	WZ	.86221843 00	PX	.92460896 00	PY	.37198500 00	PZ	-.82008664-01
QX	-.36106252 00	QY	.78726101 00	QZ	-.49985395 00	RX	-.76082220-01	RY	-.30609096-01	RZ	-.99663161 00
BX	.36106252 00	BY	-.78726101 00	BZ	.49985395 00	TX	.37324222 00	TY	-.92773394 00	TZ	.00000000 00
DAP	-.47040332 01	RAP	.21915714 02								
B.T	.60184281 05	B.R	-.34890636 05	B	.69566545 05	THA	.32989784 03				

ALL VECTORS REFERENCED TO ORBIT PLANE OF TARGET

X	-.57629769 04	Y	.17474623 05	Z	-.14802232 05	DX	-.38459156 01	DY	.39205262 01	DZ	-.15888322 01
INC	.51732024 02	LAN	.14764154 03	APF	.18984148 03	MX	-.59850504 00	MY	-.28944461 00	MZ	.71601764 00
WX	.42020898 00	WY	.66320590 00	WZ	.61934028 00	PX	.88894324 00	PY	-.43791715 00	PZ	-.13419553 00
QX	.18222048 00	QY	.60694852 00	QZ	-.77356912 00	RX	-.12038107 00	RY	.59302926-01	RZ	-.99095484 00
BX	-.18222048 00	BY	-.60694852 00	BZ	.77356912 00	TX	-.44191433 00	TY	-.89705726 00	TZ	.00000000 00
DAP	-.77121048 01	RAP	.33377391 03								
B.T	.43478565 05	B.R	-.54305647 05	B	.69566437 05	THA	.30868170 03				

0 DAYS 1 HRS. 7 MIN. 1.388 SEC. JULIAN DATE 2438043.32572544 JAN. 13,1963 19 49 02.679

TFL 0 DAYS 19 HRS. 49 MIN. 2.679 SEC.

EXTREME ELEVATION

JOBJET 1 UNIFORM TIME TAU .00000000 00

R	.25625049 05	LAT	-.23051439 02	LONG	.97621854 02				
MIN	.67023131 02	HA	.27604560 03	DEC	-.18066956 02	ELE	.12994387 02	AZI	.10400999 03
CKM	.32436223 03	CKC	.24441512 03	CKT	.32436223 03	PSS	.11951858 03	PSM	.29908091 02
UT	.11170522 01	DHA	.65437514-03	DDE	.14536401-02	DEL	-.48058147-10	DAZ	-.16227223-02
ET	.11073299 01	RGE	.23427072 05	DRG	.48496172 01	DDR	-.49072748-03	SLS	.17948843 03
RDI	.63754947 04	PHI	-.25734820 02	THI	.27684780 02	SPS	.11952652 03	POL	.11795765 03
DT	.78144291-01	RF1	.00000000 00	RF2	.00000000 00	BF1	.13446195 06		
ESS1	-.90088430 02	ESS2	-.11368843 03	F1	.11662960 06	F2	.13106065 06	PRA	.16146752 03
RF	.00000000 00	DOP	.31428296-05						

0 DAYS 1 HRS. 30 MIN. 0.000 SEC. JULIAN DATE 2438043.34168161 JAN. 13,1963 20 12 01.291

TFL 0 DAYS 20 HRS. 12 MIN. 1.291 SEC.

GEOCENTRIC EQUATORIAL COORDINATES

X	-.26909348 05	Y	.12891201 05	Z	-.11140693 05	DX	-.48458078 01	DY	.13428998-01	DZ	-.68973901 00
R	.31849821 05	DEC	-.20474363 02	RA	.15440276 03	V	.48946678 01	PTH	.62480012 02	AZ	.66977312 02
R	.31849821 05	LAT	-.20474363 02	LON	.98814473 02	VE	.44310383 01	PTE	.78419250 02	AZE	.35391283 03
XS	.57331951 08	YS	-.12432043 09	ZS	-.53907961 08	DXS	.27915948 02	DYS	.10738340 02	DZS	.46573779 01
XM	-.36972016 06	YM	.12214808 06	ZM	.78224106 05	DXM	-.39296838 00	DYM	-.85970628 00	DZM	-.29319929 00
XT	-.36972016 06	YT	.12214808 06	ZT	.78224106 05	DXT	-.39296838 00	DYT	-.85970628 00	DZT	-.29319929 00
RS	.14713460 09	VS	.30270501 02	RM	.39715508 06	VM	.98968926 00	RT	.39715508 06	VT	.98968926 00
GED	-.20602207 02	ALT	.25474256 05	LOS	.23916909 03	RAS	.29475739 03	RAM	.16171748 03	LOM	.10612919 03
DUT	.35000000 02	DT	.24000000 03	DR	.43408348 01	SHA	.26744366 05	DES	-.21492863 02	DEM	.11359309 02
DAC	.00000000 00										

```
CASE  1                                          SPACE TRAJECTORIES                                                    5

EARTH-MOON EXTEND,VIEW PERIODS,FINE PRINT            CHECK 1

                                                      GEOCENTRIC CONIC

EPOCH OF PERICENTER PASSAGE                        JULIAN DATE 2438043.27878486              JAN. 13,1963   18 41 27.013
  SMA  .37169408 06   ECC  .98233351 00    B  .69558321 05   SLR  .13017051 05   APO  .73682162 06   RCA  .65665292 04
   VH  .97760703-01    C3 -.10723959 01   C1  .72032202 05   TFP  .54342782 04    TF -.95217376-02   PER  .37586915 05
   TA  .12700847 03   MTA  .00000000 00   EA  .21447203 02    MA  .86747393 00   C3J -.13241463 01   TFI  .15000000 01

                                                                 ALL VECTORS REFERENCED TO EARTH EQUATOR PLANE
    X -.26909348 05     Y  .12891201 05    Z -.11140693 05    DX -.48458078 01    DY  .13428998-01    DZ -.68973901 00
  INC  .30434313 02   LAN  .19386203 03  APF  .18931942 03    MX -.52100415 00    MY -.77091720 00    MZ  .36638953 00
   WX -.12136177 00    WY  .49179713 00   WZ  .86221045 00    PX  .92460866 00    PY  .37198103 00    PZ -.82029927-01
   QX -.36106805 00    QY  .78725193 00   QZ -.49986416 00    RX -.76102056-01    RY -.30616760-01    RZ -.99662986 00
   BX  .36106807 00    BY -.78725196 00   BZ  .49986418 00    TX  .37323890 00    TY -.92773528 00    TZ  .00000000 00
  DAP -.47052566 01   RAP  .21915509 02
  B.T  .60176717 05   B.R -.34887287 05    B  .69558321 05   THA  .32989710 03

                                                                 ALL VECTORS REFERENCED TO ORBIT PLANE OF TARGET
    X -.12514641 05     Y  .23776590 05    Z -.17101712 05    DX -.35589279 01    DY  .31968633 01    DZ -.10353109 01
  INC  .51732901 02   LAN  .14789696 03  APF  .18984269 03    MX -.48331021 00    MY -.37730914 00    MZ  .73079784 00
   WX  .41725330 00    WY  .66508058 00   WZ  .61932826 00    PX  .89088932 00    PY -.43393882 00    PZ -.13421352 00
   QX  .17948775 00    QY  .60775397 00   QZ -.77357559 00    RX -.12066108 00    RY  .58772203-01    RZ -.99095239 00
   BX -.17948776 00    BY -.60775398 00   BZ  .77357562 00    TX -.43790076 00    TY -.89902332 00    TZ  .00000000 00
  DAP -.77131456 01   RAP  .33402998 03
  B.T  .43472713 05   B.R -.54299846 05    B  .69558252 05   THA  .30868093 03

   0 DAYS  1 HRS. 33 MIN. 34.041 SEC.              JULIAN DATE 2438043.34415892              JAN. 13,1963   20 15 35.332
                                          TFL     0 DAYS 20 HRS. 15 MIN. 35.331 SEC.

                                                  EXTREME ELEVATION

OOMJET                  1   UNIFORM TIME    TAU .00000000 00
   R        .32773682 05          LAT      -.20141441 02          LONG      .98749761 02
   MIN     .93567348 02  HA      .45379324 02  DEC    -.16648437 02  ELE     .46387559 02  AZI     .27864737 03
   CKM     .31433001 03  CKC     .23487121 03  CKT     .31433001 03  PSS     .12984839 03  PSM     .31493445 02
   UT      .15594558 01  DHA    -.69175554-03  DDE     .12437676-02  DEL     .00000000 00  DAZ     .20431657-02
   ET      .15497335 01  RGE     .27863657 05  DRG     .43311664 01  DDR    -.15035620-03  SLS     .18099483 03
   RDI     .63726076 04  PHI    -.31212360 02  THI     .13688617 03  SPS     .12985672 03  POL     .33966523 03
   DT      .92943139-01  RF1     .00000000 00  RF2     .00000000 00  BF1     .13612240 06
   ESS1   -.91094833 02  ESS2   -.11469483 03  F1      .11502206 06  F2      .12774009 06  PRA     .14798941 03
   RF      .00000000 00  DOP     .96294568-06

   0 DAYS  2 HRS.  0 MIN.  0.000 SEC.              JULIAN DATE 2438043.36251494              JAN. 13,1963   20 42 01.291
                                          TFL     0 DAYS 20 HRS. 42 MIN.  1.291 SEC.
```

CASE 1 SPACE TRAJECTORIES 6

EARTH-MOON EXTEND,VIEW PERIODS,FINE PRINT CHECK 1

GEOCENTRIC EQUATORIAL COORDINATES

X	-.35157287 05	Y	.12708021 05	Z	-.12197130 05	DX	-.43487764 01	DY	-.19462595 00	DZ	-.50107463 00
R	.39323004 05	DEC	-.18069956 02	RA	.16012700 03	V	.43818730 01	PTH	.65288810 02	AZ	.65085417 02
R	.39323003 05	LAT	-.18069957 02	LON	.97018174 02	VE	.41921775 01	PTE	.71719584 02	AZE	.30593402 03
XS	.57382201 08	YS	-.12430109 09	ZS	-.53899574 08	DXS	.27911697 02	DYS	.10747647 02	DZS	.46614099 01
XM	-.37042364 06	YM	.12059937 06	ZM	.77695545 05	DXM	-.38867541 00	DYM	-.86106993 00	DZM	-.29408608 00
XT	-.37042364 06	YT	.12059937 06	ZT	.77695545 05	DXT	-.38867541 00	DYT	-.86106993 00	DZT	-.29408608 00
RS	.14713477 09	VS	.30270505 02	RM	.39723353 06	VM	.98944257 00	RT	.39723353 06	VT	.98944257 00
GED	-.18185019 02	ALT	.32946874 05	LOS	.23167105 03	RAS	.29477988 03	RAM	.16196623 03	LOM	.98857395 02
DUT	.35000000 02	DT	.48000000 03	DR	.39806099 01	SHA	.33869438 05	DES	-.21489327 02	DEM	.11279286 02
DAC	.00000000 00										

GEOCENTRIC CONIC

EPOCH OF PERICENTER PASSAGE JULIAN DATE 2438043.27878471 JAN. 13,1963 18 41 26.000

SMA	.37166763 06	ECC	.98233206 00	B	.69556209 05	SLR	.13017184 05	APO	.73676865 06	RCA	.65666011 04
VH	.97768231-01	C3	-.10724722 01	C1	.72032570 05	TFP	.72342914 04	TF	-.95253884-02	PER	.37582903 05
TA	.13292180 03	MTA	.00000000 00	EA	.24455752 02	MA	.11549333 01	C3J	-.13236902 01	TFI	.20000000 01

ALL VECTORS REFERENCED TO EARTH EQUATOR PLANE

X	-.35157287 05	Y	.12708021 05	Z	-.12197130 05	DX	-.43487764 01	DY	-.19462595 00	DZ	-.50107463 00
INC	.30434896 02	LAN	.19386105 03	APF	.18932048 03	MX	-.43118693 00	MY	-.80850860 00	MZ	.40048911 00
WX	-.12135545 00	WY	.49180765 00	WZ	.86220530 00	PX	.92460851 00	PY	.37197900 00	PZ	-.82040586-01
QX	-.36107052 00	QY	.78724626 00	QZ	-.49987122 00	RX	-.76112001-01	RY	-.30620599-01	RZ	-.99662896 00
BX	.36107055 00	BY	-.78724633 00	BZ	.49987126 00	TX	.37323720 00	TY	-.92773595 00	TZ	.00000000 00
DAP	-.47058679 01	RAP	.21915404 02								
B.T	.60174586 05	B.R	-.34886753 05	B	.69556209 05	THA	.32989660 03				

ALL VECTORS REFERENCED TO ORBIT PLANE OF TARGET

X	-.18818945 05	Y	.29037087 05	Z	-.18681366 05	DX	-.33231518 01	DY	.27569765 01	DZ	-.74602436 00
INC	.51733451 02	LAN	.14815294 03	APF	.18984327 03	MX	-.40701707 00	MY	-.42521162 00	MZ	.73017318 00
WX	.41428090 00	WY	.66694317 00	WZ	.61932073 00	PX	.89282025 00	PY	-.42994923 00	PZ	-.13422233 00
QX	.17675780 00	QY	.60854781 00	QZ	-.77358011 00	RX	-.12093069 00	RY	.58235748-01	RZ	-.99095123 00
BX	-.17675780 00	BY	-.60854782 00	BZ	.77358014 00	TX	-.43387527 00	TY	-.90097295 00	TZ	.00000000 00
DAP	-.77136544 01	RAP	.33428625 03								
B.T	.43470905 05	B.R	-.54298568 05	B	.69556122 05	THA	.30868043 03				

0 DAYS 6 HRS. 0 MIN. 0.000 SEC. JULIAN DATE 2438043.52918161 JAN. 14,1963 00 42 01.291

TFL 1 DAYS 0 HRS. 42 MIN. 1.291 SEC.

GEOCENTRIC EQUATORIAL COORDINATES

X	-.84113032 05	Y	.65046126 04	Z	-.15547928 05	DX	-.28178647 01	DY	-.52040375 00	DZ	-.99586391-01
R	.85784906 05	DEC	-.10442179 02	RA	.17557801 03	V	.28672459 01	PTH	.72971035 02	AZ	.61241516 02
R	.85784904 05	LAT	-.10442179 02	LON	.52304872 02	VE	.60836077 01	PTE	.26784961 02	AZE	.27426603 03
XS	.57783893 08	YS	-.12414578 09	ZS	-.53832222 08	DXS	.27877568 02	DYS	.10822052 02	DZS	.46936451 01
XM	-.37577229 06	YM	.10812479 06	ZM	.73410830 05	DXM	-.35413425 00	DYM	-.87130634 00	DZM	-.30094183 00
XT	-.37577229 06	YT	.10812479 06	ZT	.73410830 05	DXT	-.35413425 00	DYT	-.87130634 00	DZT	-.30094183 00
RS	.14713620 09	VS	.30270545 02	RM	.39785039 06	VM	.98749774 00	RT	.39785039 06	VT	.98749774 00
GED	-.10511759 02	ALT	.79407408 05	LOS	.17168657 03	RAS	.29495972 03	RAM	.16394734 03	LOM	.40674203 02
DUT	.35000000 02	DT	.48000000 03	DR	.27415368 01	SHA	.79253051 05	DES	-.21460924 02	DEM	.10633072 02
DAC	.00000000 00										

GEOCENTRIC CONIC

EPOCH OF PERICENTER PASSAGE JULIAN DATE 2438043.27878803 JAN. 13,1963 18 41 27.287

EARTH-MOON EXTEND,VIEW PERIODS,FINE PRINT CHECK 1

SMA	.37183629 06	ECC	.98234018 00	B	.69571924 05	SLR	.13017156 05	APO	.73710600 06	RCA	.65665603 04
VH	.97723381-01	C3	-.10719857 01	C1	.72032494 05	TFP	.21634004 05	TF	-.94456076-02	PER	.37608489 05
TA	.14971272 03	MTA	.00000000 00	EA	.38452527 02	MA	.34514555 01	C3J	-.13218139 01	TFI	.59999999 01

ALL VECTORS REFERENCED TO EARTH EQUATOR PLANE

X	-.84113032 05	Y	.65046126 04	Z	-.15547928 05	DX	-.28178647 01	DY	-.52040375 00	DZ	-.99586391-01
INC	.30442655 02	LAN	.19385364 03	APF	.18932762 03	MX	-.15453144 00	MY	-.86732277 00	MZ	.47315046 00
WX	-.12131984 00	WY	.49193693 00	WZ	.86213668 00	PX	.92461428 00	PY	.37194678 00	PZ	-.82121895-01
QX	-.36106773 00	QY	.78718086 00	QZ	-.49997643 00	RX	-.76188419-01	RY	-.30648496-01	RZ	-.99662228 00
BX	.36106772 00	BY	-.78718085 00	BZ	.49997642 00	TX	.37320737 00	TY	-.92774795 00	TZ	.00000000 00
DAP	-.47105432 01	RAP	.21913563 02								
B.T	.60183787 05	B.R	-.34902210 05	B	.69571924 05	THA	.32988939 03				

ALL VECTORS REFERENCED TO ORBIT PLANE OF TARGET

X	-.60531739 05	Y	.56049599 05	Z	-.23524469 05	DX	-.24311048 01	DY	.15142253 01	DZ	-.13397730 00
INC	.51741008 02	LAN	.15019712 03	APF	.18984673 03	MX	-.17044506 00	MY	-.53641574 00	MZ	.69767974 00
WX	.39026793 00	WY	.68136707 00	WZ	.61921716 00	PX	.90758900 00	PY	-.39780685 00	PZ	-.13428310 00
QX	.15483277 00	QY	.61440104 00	QZ	-.77365249 00	RX	-.12298776 00	RY	.53906968-01	RZ	-.99094302 00
BX	-.15483277 00	BY	-.61440104 00	BZ	.77365250 00	TX	-.40144270 00	TY	-.91588414 00	TZ	.00000000 00
DAP	-.77171686 01	RAP	.33633159 03								
B.T	.43473858 05	B.R	-.54316420 05	B	.69571903 05	THA	.30867313 03				

0 DAYS 6 HRS. 3 MIN. 56.027 SEC. JULIAN DATE 2438043.53191340 JAN. 14,1963 00 45 57.318

TFL 1 DAYS 0 HRS. 45 MIN. 57.318 SEC.

END OF VIEW PERIOD

DOMJET 1 UNIFORM TIME TAU .00000000 00

R	.86430703 05	LAT	-.10378949 02	LONG	.51435824 02						
MIN	.36393378 03	HA	.89125519 02	DEC	-.82363679 01	ELE	.49999998 01	AZI	.26338877 03		
CKM	.33723548 03	CKC	.26017304 03	CKT	.33723548 03	PSS	.11664666 03	PSM	.21211064 02		
UT	.60655629 01	DHA	.35698802-02	DDE	.23300318-03	DEL	-.31523647-02	DAZ	-.16184210-02		
ET	.60558406 01	RGE	.85641833 05	DRG	.30851954 01	DDR	-.41897146-04	SLS	.19074779 03		
RDI	.63726076 04	PHI	-.31212360 02	THI	.13688617 03	SPS	.11667646 03	POL	.17677533 01		
DT	.28567037 00	RF1	.00000000 00	RF2	.00000000 00	BF1	.14011289 06				
ESS1	-.10084779 03	ESS2	-.12444779 03	F1	.11115566 06	F2	.11975994 06	PRA	.17201992 03		
RF	.00000000 00	DOP	.26832732-06								

0 DAYS 7 HRS. 45 MIN. 31.301 SEC. JULIAN DATE 2438043.60246056 JAN. 14,1963 02 27 32.592

TFL 1 DAYS 2 HRS. 27 MIN. 32.592 SEC.

EXTREME ELEVATION

```
EARTH-MOON EXTEND,VIEW PERIODS,FINE PRINT            CHECK 1
JOBJET                  1   UNIFORM TIME    TAU .00000000 00
   R        .10231924 06        LAT     -.90033649 01        LONG     .28486902 02
   MIN     .46552169 03  HA     .35914955 03  DEC   -.79104475 01  ELE    .72157232 02  AZI    .27505875 01
   CKM     .34020731 03  CKT    .26367178 03  CKT    .34020731 03  PSS    .11141087 03  PSM    .23183988 02
   UT      .77586947 01  DHA    .40617112-02  DDE    .17572004-03  DEL   -.18602582-09  DAZ   -.13140154-01
   ET      .77489725 01  RGE    .96231752 05  DRG    .24952794 01  DDR   -.65136160-05  SLS    .19176044 03
   RDI     .63754947 04  PHI   -.25734820 02  THI    .27684780 02  SPS    .11144574 03  POL    .65694384 02
   DT      .32099453 00  RF1    .00000000 00  RF2    .00000000 00  BF1    .14200222 06
   ESS1   -.10236044 03  ESS2  -.12596044 03  F1     .10932639 06  F2     .11598167 06  PRA    .17826101 03
   RF      .00000000 00  DOP    .41715996-07

   0 DAYS 10 HRS.  0 MIN.  0.000 SEC.          JULIAN DATE 2438043.69584827          JAN. 14,1963   04 42 01.291
                                          TFL    1 DAYS  4 HRS. 42 MIN.  1.291 SEC.

      GEOCENTRIC                                                                          EQUATORIAL COORDINATES

    X -.12038244 06     Y -.11879774 04     Z -.16260292 05    DX -.22806615 01    DY -.53821983 00    DZ -.13517161-01
    R  .12148144 06   DEC -.76921274 01    RA  .18056539 03     V  .23433480 01   PTH  .75344064 02    AZ  .60432324 02
    R  .12148144 06   LAT -.76921274 01   LON  .35712799 03    VE  .85735192 01   PTE  .15333126 02   AZE  .27202778 03
   XS  .58185095 08    YS -.12398940 09    ZS -.53764402 08   DXS  .27843202 02   DYS  .10896376 02   DZS  .47258437 01
   XM -.38062119 06    YM  .95511426 05    ZM  .69030455 05   DXM -.31927278 00   DYM -.88034660 00   DZM -.30737046 00
   XT -.38062119 06    YT  .95511426 05    ZT  .69030455 05   DXT -.31927278 00   DYT -.88034660 00   DZT -.30737046 00
   RS  .14713765 09    VS  .30270588 02    RM  .39844714 06    VM  .98560734 00    RT  .39844714 06    VT  .98560734 00
  GED -.77439136 01   ALT  .11510362 06   LOS  .11170207 03   RAS  .29513948 03   RAM  .16591331 03   LOM  .34247590 03
  DUT  .35000000 02    DT  .95999999 03    DR  .22671016 01   SHA  .11447412 06   DES -.21432328 02   DEM  .99767607 01
  DAC  .00000000 00

                                                GEOCENTRIC CONIC

EPOCH OF PERICENTER PASSAGE                     JULIAN DATE 2438043.27880794          JAN. 13,1963   18 41 29.006
  SMA  .37214646 06   ECC  .98235810 00     B  .69594940 05   SLR  .13014915 05   APO  .73772755 06   RCA  .65653702 04
   VH  .97632640-01    C3 -.10710923 01    C1  .72026291 05   TFP  .36032284 05    TF -.89678764-02   PER  .37655557 05
   TA  .15535373 03   MTA  .00000000 00    EA  .46712315 02    MA  .57413494 01   C3J -.13208460 01   TFI  .10000000 02

                                                   ALL VECTORS REFERENCED TO EARTH EQUATOR PLANE
    X -.12038244 06     Y -.11879774 04     Z -.16260292 05    DX -.22806615 01    DY -.53821983 00    DZ -.13517161-01
  INC  .30464108 02   LAN  .19384033 03   APF  .18933843 03    MX -.57462425-01    MY -.87038289 00    MZ  .48901102 00
   WX -.12128284 00    WY  .49227846 00    WZ  .86194692 00    PX  .92463993 00    PY  .37185073 00    PZ -.82268576-01
   QX -.36101452 00    QY  .78701274 00    QZ -.50027940 00    RX -.76327541-01    RY -.30695681-01    RZ -.99661022 00
   BX  .36101452 00    BY -.78701275 00    BZ  .50027940 00    TX  .37311550 00    TY -.92778490 00    TZ  .00000000 00
  DAP -.47189759 01   RAP  .21907889 02
  B.T  .60191178 05   B.R -.34935339 05     B  .69594940 05   THA  .32986885 03

                                                   ALL VECTORS REFERENCED TO ORBIT PLANE OF TARGET
    X -.94981038 05     Y  .71712111 05     Z -.24366260 05    DX -.20718189 01    DY  .10949091 01    DZ -.44735056-02
  INC  .51762286 02   LAN  .15223075 03   APF  .18985106 03    MX -.86971947-01    MY -.56434387 00    MZ  .68512440 00
   WX  .36595018 00    WY  .69499040 00    WZ  .61892551 00    PX  .92112076 00    PY -.36534688 00    PZ -.13438085 00
   QX  .13272909 00    QY  .61928184 00    QZ -.77386883 00    RX -.12491399 00    RY  .49545010-01    RZ -.99092976 00
   BX -.13272910 00    BY -.61928185 00    BZ  .77386885 00    TX -.36869099 00    TY -.92955202 00    TZ  .00000000 00
  DAP -.77228205 01   RAP  .33836509 03
  B.T  .43468348 05   B.R -.54350320 05     B  .69594932 05   THA  .30865215 03

   0 DAYS 12 HRS. 39 MIN. 45.787 SEC.          JULIAN DATE 2438043.80679488          JAN. 14,1963   07 21 47.079
                                          TFL    1 DAYS  7 HRS. 21 MIN. 47.078 SEC.
```

CASE 1 SPACE TRAJECTORIES 9

EARTH-MOON EXTEND,VIEW PERIODS,FINE PRINT CHECK 1

START OF VIEW PERIOD

JETGOLD-2 1 UNIFORM TIME TAU .00000000 00

R	.14221445 06		LAT	-.65602198 01		LONG	.31907727 03				
MIN	.75976311 03	HA	.28200880 03	DEC	-.80923346 01	ELE	.49999998 01	AZI	.10357216 03		
CKM	.34183523 03	CKC	.26645653 03	CKT	.34183523 03	PSS	.10586210 03	PSM	.23938818 02		
UT	.12662718 02	DHA	.40615830-02	DDE	.10403642-03	DEL	.32880920-02	DAZ	.23259266-02		
ET	.12652996 02	RGE	.14151735 06	DRG	.17077440 01	DDR	-.12925044-04	SLS	.19511026 03		
RDI	.63720326 04	PHI	.35205980 02	THI	.24315175 03	SPS	.10591509 03	POL	.19158105 03		
DT	.47205102 00	RF1	.00000000 00	RF2	.00000000 00	BF1	.14452448 06				
ESS1	-.10521026 03	ESS2	-.12881026 03	F1	.10687351 06	F2	.11093769 06	PRA	.18463047 03		
RF	.00000000 00	DOP	.82777532-07								

0 DAYS 13 HRS. 46 MIN. 43.465 SEC. JULIAN DATE 2438043.85329579 JAN. 14,1963 08 28 44.756

TFL 1 DAYS 8 HRS. 28 MIN. 44.756 SEC.

END OF VIEW PERIOD

JOBJET 1 UNIFORM TIME TAU .00000000 00

R	.15038596 06		LAT	-.61741204 01		LONG	.30296711 03				
MIN	.82672442 03	HA	.86915866 02	DEC	-.51379056 01	ELE	.49999998 01	AZI	.26669664 03		
CKM	.34285537 03	CKC	.26769155 03	CKT	.34285537 03	PSS	.11039142 03	PSM	.20448133 02		
UT	.13778740 02	DHA	.39976828-02	DDE	.91321059-04	DEL	-.36344283-02	DAZ	-.16348929-02		
ET	.13769018 02	RGE	.14969612 06	DRG	.24036147 01	DDR	-.14094602-04	SLS	.19559828 03		
RDI	.63754947 04	PHI	-.25734820 02	THI	.27684780 02	SPS	.11044604 03	POL	.34265437 00		
DT	.49933245 00	RF1	.00000000 00	RF2	.00000000 00	BF1	.14229580 06				
ESS1	-.10619828 03	ESS2	-.12979828 03	F1	.10903537 06	F2	.11539458 06	PRA	.18104260 03		
RF	.00000000 00	DOP	.90267885-07								

0 DAYS 14 HRS. 0 MIN. 0.000 SEC. JULIAN DATE 2438043.86251494 JAN. 14,1963 08 42 01.291

TFL 1 DAYS 8 HRS. 42 MIN. 1.291 SEC.

GEOCENTRIC EQUATORIAL COORDINATES

X	-.15085245 06	Y	-.88727995 04	Z	-.16155623 05	DX	-.19740861 01	DY	-.52738819 00	DZ	.23884234-01
R	.15197431 06	DEC	-.61023573 01	RA	.18336613 03	V	.20434589 01	PTH	.76592458 02	AZ	.60053129 02
R	.15197431 06	LAT	-.61023573 01	LON	.29976445 03	VE	.10795987 02	PTE	.10609875 02	AZE	.27127726 03
XS	.58585797 08	YS	-.12383196 09	ZS	-.53696122 08	DXS	.27808601 02	DYS	.10970619 02	DZS	.47580058 01
XM	-.38496604 06	YM	.82776493 05	ZM	.64560611 05	DXM	-.28413503 00	DYM	-.88819113 00	DZM	-.31336841 00
XT	-.38496604 06	YT	.82776493 05	ZT	.64560611 05	DXT	-.28413503 00	DYT	-.88819113 00	DZT	-.31336841 00
RS	.14713912 09	VS	.30270635 02	RM	.39902239 06	VM	.98377637 00	RT	.39902239 06	VT	.98377637 00
GED	-.61436266 01	ALT	.14559635 06	LOS	.51717500 02	RAS	.29531917 03	RAM	.16786487 03	LOM	.28426319 03
DUT	.35000000 02	DT	.19200000 04	DR	.19877652 01	SHA	.14462084 06	DES	-.21403542 02	DEM	.93112143 01
DAC	.00000000 00										

GEOCENTRIC CONIC

EPOCH OF PERICENTER PASSAGE JULIAN DATE 2438043.27886119 JAN. 13,1963 18 41 33.608

SMA	.37254694 06	ECC	.98238535 00	B	.69616462 05	SLR	.13008968 05	APO	.73853159 06	RCA	.65622799 04
VH	.97504062-01	C3	-.10699409 01	C1	.72009834 05	TFP	.50427683 05	TF	-.76897144-02	PER	.37716356 05
TA	.15855921 03	MTA	.00000000 00	EA	.52937727 02	MA	.80221453 01	C3J	-.13201247 01	TFI	.14000000 02

CASE 1 SPACE TRAJECTORIES 10

EARTH-MOON EXTEND,VIEW PERIODS,FINE PRINT CHECK 1

ALL VECTORS REFERENCED TO EARTH EQUATOR PLANE

X	-.15085245 06	Y	-.88727995 04	Z	-.16155623 05	DX	-.19740861 01	DY	-.52738819 00	DZ	.23884234-01
INC	.30505707 02	LAN	.19382077 03	APF	.18935260 03	MX	-.20985575-02	MY	-.86810943 00	MZ	.49636797 00
WX	-.12126405 00	WY	.49292690 00	WZ	.86157859 00	PX	.92469189 00	PY	.37167139 00	PZ	-.82493854-01
QX	-.36088771 00	QY	.78669117 00	QZ	-.50087590 00	RX	-.76542288-01	RY	-.30765468-01	RZ	-.99659155 00
BX	.36088778 00	BY	-.78669132 00	BZ	.50087599 00	TX	.37294255 00	TY	-.92785445 00	TZ	.00000000 00
DAP	-.47319268 01	RAP	.21897208 02								
B.T	.60185203 05	B.R	-.34988470 05	B	.69616462 05	THA	.32982856 03				

ALL VECTORS REFERENCED TO ORBIT PLANE OF TARGET

X	-.12590103 06	Y	.81668984 05	Z	-.23985416 05	DX	-.18571255 01	DY	.85099979 00	DZ	.51074487-01
INC	.51803716 02	LAN	.15425389 03	APF	.18985573 03	MX	-.39149178-01	MY	-.57750224 00	MZ	.68272275 00
WX	.34138104 00	WY	.70787930 00	WZ	.61835741 00	PX	.93341124 00	PY	-.33263743 00	PZ	-.13452050 00
QX	.11046451 00	QY	.62310454 00	QZ	-.77429862 00	RX	-.12671468 00	RY	.45156992-01	RZ	-.99091079 00
BX	-.11046451 00	BY	-.62310454 00	BZ	.77429861 00	TX	-.33568857 00	TY	-.94197303 00	TZ	.00000000 00
DAP	-.77308955 01	RAP	.34038558 03								
B.T	.43442700 05	B.R	-.54398346 05	B	.69616437 05	THA	.30861098 03				

0 DAYS 17 HRS. 56 MIN. 47.778 SEC. JULIAN DATE 2438044.02695681 JAN. 14,1963 12 38 49.069

TFL 1 DAYS 12 HRS. 38 MIN. 49.069 SEC.

EXTREME ELEVATION

JETGOLD-2 1 UNIFORM TIME TAU .00000000 00

R	.17878857 06		LAT	-.50245099 01		LONG	.24227375 03				
MIN	.10767963 04	HA	.90443420 00	DEC	-.63799942 01	ELE	.48405293 02	AZI	.18135417 03		
CKM	.34284106 03	CKC	.26837878 03	CKT	.34284106 03	PSS	.10628342 03	PSM	.21374067 02		
UT	.17946605 02	DHA	.41882876-02	DDE	.80881059-04	DEL	.19007626-10	DAZ	.62704390-02		
ET	.17936882 02	RGE	.17397313 06	DRG	.17972585 01	DDR	.15430086-04	SLS	.19690371 03		
RDI	.63720326 04	PHI	.35205980 02	THI	.24315175 03	SPS	.10634843 03	POL	.24661000 03		
DT	.58031182 00	RF1	.00000000 00	RF2	.00000000 00	BF1	.14423779 06				
ESS1	-.10700371 03	ESS2	-.13060371 03	F1	.10715067 06	F2	.11151101 06	PRA	.18521012 03		
RF	.00000000 00	DOP	-.98820899-07								

0 DAYS 18 HRS. 0 MIN. 0.000 SEC. JULIAN DATE 2438044.02918161 JAN. 14,1963 12 42 01.291

TFL 1 DAYS 12 HRS. 42 MIN. 1.291 SEC.

GEOCENTRIC EQUATORIAL COORDINATES

X	-.17769788 06	Y	-.16353295 05	Z	-.15650092 05	DX	-.17659183 01	DY	-.51125979 00	DZ	.44565896-01
R	.17913373 06	DEC	-.50120593 01	RA	.18525804 03	V	.18389780 01	PTH	.77379161 02	AZ	.59800051 02
R	.17913372 06	LAT	-.50120593 01	LON	.24149211 03	VE	.12793510 02	PTE	.80634608 01	AZE	.27091427 03
XS	.58985998 08	YS	-.12367344 09	ZS	-.53627378 08	DXS	.27773762 02	DYS	.11044779 02	DZS	.47901313 01
XM	-.38880318 06	YM	.69937200 05	ZM	.60007514 05	DXM	-.24876411 00	DYM	-.89484160 00	DZM	-.31893262 00
XT	-.38880318 06	YT	.69937200 05	ZT	.60007514 05	DXT	-.24876411 00	DYT	-.89484160 00	DZT	-.31893262 00
RS	.14714062 09	VS	.30270685 02	RM	.39957480 06	VM	.98200971 00	RT	.39957480 06	VT	.98200971 00
GED	-.50460396 01	ALT	.17275569 06	LOS	.35173285 03	RAS	.29549879 03	RAM	.16980278 03	LOM	.22603685 03
DUT	.35000000 02	DT	.19200000 04	DR	.17945435 01	SHA	.17148475 06	DES	-.21374565 02	DEM	.86372676 01
DAC	.00000000 00										

GEOCENTRIC CONIC

EPOCH OF PERICENTER PASSAGE JULIAN DATE 2438043.27897258 JAN. 13,1963 18 41 43.232

CASE 1 SPACE TRAJECTORIES 11

EARTH-MOON EXTEND,VIEW PERIODS,FINE PRINT CHECK 1

SMA	.37304861 06	ECC	.98242480 00	B	.69632820 05	SLR	.12997577 05	APO	.73954082 06	RCA	.65564035 04
VH	.97328363-01	C3	-.10685020 01	C1	.71978300 05	TFP	.64818059 05	TF	-.50163268-02	PER	.37792566 05
TA	.16074037 03	MTA	.00000000 00	EA	.58054626 02	MA	.10290604 02	C3J	-.13195198 01	TFI	.18000000 02

ALL VECTORS REFERENCED TO EARTH EQUATOR PLANE

X	-.17769788 06	Y	-.16353295 05	Z	-.15650092 05	DX	-.17659183 01	DY	-.51125979 00	DZ	.44565896-01
INC	.30574265 02	LAN	.19379491 03	APF	.18936958 03	MX	.35441833-01	MY	-.86466577 00	MZ	.50109582 00
WX	-.12128741 00	WY	.49398290 00	WZ	.86097056 00	PX	.92477626 00	PY	.37139110 00	PZ	-.82810180-01
QX	-.36066358 00	QY	.78616130 00	QZ	-.50186871 00	RX	-.76844825-01	RY	-.30860961-01	RZ	-.99656533 00
BX	.36066358 00	BY	-.78616130 00	BZ	.50186871 00	TX	.37267110 00	TY	-.92796350 00	TZ	.00000000 00
DAP	-.47501148 01	RAP	.21880447 02								
B.T	.60158432 05	B.R	-.35066976 05	B	.69632820 05	THA	.32976164 03				

ALL VECTORS REFERENCED TO ORBIT PLANE OF TARGET

X	-.15451279 06	Y	.87664551 05	Z	-.23013393 05	DX	-.17064750 01	DY	.68056949 00	DZ	.81290930-01
INC	.51872199 02	LAN	.15626684 03	APF	.18986017 03	MX	-.65480055-02	MY	-.58480855 00	MZ	.68543454 00
WX	.31660297 00	WY	.72010957 00	WZ	.61741762 00	PX	.94446136 00	PY	-.29974444 00	PZ	-.13470693 00
QX	.88063612-01	QY	.62577576 00	QZ	-.77501566 00	RX	-.12839576 00	RY	.40749061-01	RZ	-.99088545 00
BX	-.88063622-01	BY	-.62577584 00	BZ	.77501575 00	TX	-.30250160 00	TY	-.95314888 00	TZ	.00000000 00
DAP	-.77416752 01	RAP	.34239208 03								
B.T	.43387989 05	B.R	-.54462925 05	B	.69632808 05	THA	.30854264 03				

0 DAYS 19 HRS. 21 MIN. 20.388 SEC. JULIAN DATE 2438044.08566757 JAN. 14,1963 14 03 21.679

TFL 1 DAYS 14 HRS. 3 MIN. 21.679 SEC.

START OF VIEW PERIOD

OOMJET 1 UNIFORM TIME TAU .00000000 00

R .18775913 06 LAT -.47108130 01 LONG .22162018 03

MIN	.11613398 04	HA	.27360025 03	DEC	-.37134713 01	ELE	.49999998 01	AZI	.91318313 02		
CKM	.34611950 03	CKC	.27186567 03	CKT	.34611950 03	PSS	.10538992 03	PSM	.20536109 02		
UT	.19355663 02	DHA	.40998174-02	DDE	.42193746-04	DEL	.34836955-02	DAZ	-.21538056-02		
ET	.19345940 02	RGE	.18709637 06	DRG	.13571402 01	DDR	-.89975394-05	SLS	.19753538 03		
RDI	.63726076 04	PHI	-.31212360 02	THI	.13688617 03	SPS	.10546014 03	POL	.12560342 03		
DT	.62408622 00	RF1	.00000000 00	RF2	.00000000 00	BF1	.14564736 06				
ESS1	-.10763538 03	ESS2	-.13123538 03	F1	.10577872 06	F2	.10869216 06	PRA	.18744247 03		
RF	.00000000 00	DOP	.57624108-07								

0 DAYS 22 HRS. 0 MIN. 0.000 SEC. JULIAN DATE 2438044.19584827 JAN. 14,1963 16 42 01.291

TFL 1 DAYS 16 HRS. 42 MIN. 1.291 SEC.

GEOCENTRIC EQUATORIAL COORDINATES

X	-.20196345 06	Y	-.23594533 05	Z	-.14908286 05	DX	-.16110733 01	DY	-.49450539 00	DZ	.57565859-01
R	.20388279 06	DEC	-.41933160 01	RA	.18666342 03	V	.16862404 01	PTH	.77923837 02	AZ	.59581690 02
R	.20388279 06	LAT	-.41933160 01	LON	.18273321 03	VE	.14617744 02	PTE	.64769197 01	AZE	.27070462 03
XS	.59385701 08	YS	-.12351386 09	ZS	-.53558170 08	DXS	.27738687 02	DYS	.11118856 02	DZS	.48222196 01
XM	-.39212954 06	YM	.57010715 05	ZM	.55377426 05	DXM	-.21320235 00	DYM	-.90030070 00	DZM	-.32406043 00
XT	-.39212954 06	YT	.57010715 05	ZT	.55377426 05	DXT	-.21320235 00	DYT	-.90030070 00	DZT	-.32406043 00
RS	.14714215 09	VS	.30270737 02	RM	.40010306 06	VM	.98031206 00	RT	.40010306 06	VT	.98031206 00
GED	-.42217896 01	ALT	.19750470 06	LOS	.29174813 03	RAS	.29567834 03	RAM	.17172787 03	LOM	.16779766 03
DUT	.35000000 02	DT	.19200000 04	DR	.16489245 01	SHA	.19596136 06	DES	-.21345397 02	DEM	.79557300 01
DAC	.00000000 00										

```
CASE  1                                          SPACE TRAJECTORIES                                                  12

EARTH-MOON EXTEND,VIEW PERIODS,FINE PRINT              CHECK 1

                                                       GEOCENTRIC CONIC

EPOCH OF PERICENTER PASSAGE                          JULIAN DATE 2438043.27917766              JAN. 13,1963   18 42 00.950
  SMA  .37367368 06   ECC  .98248018 00    B  .69640492 05   SLR  .12978698 05   APO  .74080066 06   RCA  .65466973 04
   VH  .97092251-01   C3 -.10667147 01   C1  .71926007 05   TFP  .79200341 05    TF -.94652175-04   PER  .37887591 05
   TA  .16237136 03   MTA  .00000000 00   EA  .62452389 02    MA  .12542419 02   C3J -.13189833 01   TFI  .22000000 02

                                                                  ALL VECTORS REFERENCED TO EARTH EQUATOR PLANE
    X -.20196345 06    Y -.23594533 05    Z -.14908286 05    DX -.16110733 01    DY -.49450539 00    DZ  .57565859-01
  INC  .30678540 02  LAN  .19376258 03  APF  .18938896 03    MX  .63292187-01    MY -.86082261 00    MZ  .50495402 00
   WX -.12138123 00   WY  .49557236 00   WZ  .86004341 00    PX  .92489973 00    PY  .37098827 00    PZ -.83235401-01
   QX -.36031524 00   QY  .78535072 00   QZ -.50338576 00    RX -.77252474-01    RY -.30986885-01    RZ -.99652988 00
   BX  .36031524 00   BY -.78535070 00   BZ  .50338574 00    TX  .37228012 00    TY -.92812042 00    TZ  .00000000 00
  DAP -.47745609 01  RAP  .21856309 02
  B.T  .60102406 05  B.R -.35178101 05    B  .69640492 05   THA  .32965944 03

                                                                  ALL VECTORS REFERENCED TO ORBIT PLANE OF TARGET
    X -.18137573 06    Y  .90554750 05    Z -.21699519 05    DX -.15908900 01    DY  .55000315 00    DZ  .99860501-01
  INC  .51976395 02  LAN  .15826982 03  APF  .18986383 03    MX  .17776673-01    MY -.58886075 00    MZ  .69113618 00
   WX  .29165592 00   WY  .73177727 00   WZ  .61598604 00    PX  .95427424 00    PY -.26673872 00    PZ -.13494852 00
   QX  .65555046-01   QY  .62717814 00   QZ -.77611212 00    RX -.12996676 00    RY  .36328305-01    RZ -.99085259 00
   BX -.65555050-01   BY -.62717818 00   BZ  .77611217 00    TX -.26920121 00    TY -.96308396 00    TZ  .00000000 00
  DAP -.77556447 01  RAP  .34438326 03
  B.T  .43293590 05  B.R -.54547796 05    B  .69640484 05   THA  .30843839 03

   0 DAYS 23 HRS. 15 MIN. 11.244 SEC.                JULIAN DATE 2438044.24806175                JAN. 14,1963   17 57 12.536
                                                TFL    1 DAYS 17 HRS. 57 MIN. 12.536 SEC.

                                                       END OF VIEW PERIOD

JETGOLD-2                1   UNIFORM TIME    TAU .00000000 00
   R        .21123268 06        LAT     -.39745946 01        LONG      .16425787 03
   MIN     .13951874 04  HA     .80289369 02  DEC    -.49895060 01  ELE    .49999998 01  AZI    .26029472 03
   CKM     .34367468 03  CKC    .26993965 03  CKT     .34367468 03  PSS    .10668809 03  PSM    .18596212 02
   UT      .23253123 02  DHA    .41047087-02  DDE     .63416016-04  DEL   -.32685696-02  DAZ    .24673676-02
   ET      .23243401 02  RGE    .21058192 06  DRG     .19719063 01  DDR   -.36250339-05  SLS    .19856249 03
   RDI     .63720326 04  PHI    .35205980 02  THI     .24315175 03  SPS    .10676661 03  POL    .29989750 03
   DT      .70242558 00  RF1    .00000000 00  RF2     .00000000 00  BF1    .14367844 06
   ESS1   -.10866249 03  ESS2  -.13226249 03  F1      .10769114 06  F2     .11262959 06  PRA    .18564089 03
   RF      .00000000 00  DOP    .23216275-07

   1 DAYS  1 HRS.  5 MIN. 15.295 SEC.                JULIAN DATE 2438044.32449751                JAN. 14,1963   19 47 16.586
                                                TFL    1 DAYS 19 HRS. 47 MIN. 16.585 SEC.

                                                       EXTREME ELEVATION
```

EARTH-MOON EXTEND,VIEW PERIODS,FINE PRINT CHECK 1
OOMJET 1 UNIFORM TIME TAU .00000000 00

R	.22168925 06		LAT	-.36795330 01			LONG	.13716695 03			
MIN	.15052549 04	HA	.35971213 03	DEC	-.28983258 01	ELE	.61684659 02	AZI	.60744473 00		
CKM	.34626425 03	CKC	.27274863 03	CKT	.34626425 03	PSS	.10586346 03	PSM	.18134733 02		
UT	.25087582 02	DHA	.42095558-02	DDE	.38088261-04	DEL	.51405585-09	DAZ	-.88449582-02		
ET	.25077859 02	RGE	.21605851 06	DRG	.15576812 01	DDR	.21053596-04	SLS	.19878550 03		
RDI	.63726076 04	PHI	-.31212360 02	THI	.13688617 03	SPS	.10594436 03	POL	.67389015 02		
DT	.72069352 00	RF1	.00000000 00	RF2	.00000000 00	BF1	.14500508 06				
ESS1	-.10888550 03	ESS2	-.13248550 03	F1	.10641619 06	F2	.10997658 06	PRA	.18754476 03		
RF	.00000000 00	DOP	-.13483628-06								

1 DAYS 2 HRS. 0 MIN. 0.000 SEC. JULIAN DATE 2438044.36251494 JAN. 14,1963 20 42 01.291
TFL 1 DAYS 20 HRS. 42 MIN. 1.291 SEC.

GEOCENTRIC EQUATORIAL COORDINATES

X	-.22425393 06	Y	-.30597836 05	Z	-.14011687 05	DX	-.14892558 01	DY	-.47830160 00	DZ	.66453005-01
R	.22676503 06	DEC	-.35425305 01	RA	.18776962 03	V	.15655897 01	PTH	.78324426 02	AZ	.59354098 02
R	.22676502 06	LAT	-.35425305 01	LON	.12367515 03	VE	.16304840 02	PTE	.53956786 01	AZE	.27057004 03
XS	.59784890 08	YS	-.12335320 09	ZS	-.53488504 08	DXS	.27703376 02	DYS	.11192848 02	DZS	.48542705 01
XM	-.39494270 06	YM	.44014189 05	ZM	.50676661 05	DXM	-.17749142 00	DYM	-.90457204 00	DZM	-.32874968 00
XT	-.39494270 06	YT	.44014189 05	ZT	.50676661 05	DXT	-.17749142 00	DYT	-.90457204 00	DZT	-.32874968 00
RS	.14714369 09	VS	.30270792 02	RM	.40060592 06	VM	.97868796 00	RT	.40060592 06	VT	.97868796 00
GED	-.35666100 01	ALT	.22038690 06	LOS	.23176334 03	RAS	.29585781 03	RAM	.17364094 03	LOM	.10954647 03
DUT	.35000000 02	DT	.19200000 04	DR	.15331964 01	SHA	.21858119 06	DES	-.21316040 02	DEM	.72673895 01
DAC	.00000000 00										

GEOCENTRIC CONIC

EPOCH OF PERICENTER PASSAGE JULIAN DATE 2438043.27952718 JAN. 13,1963 18 42 31.148

SMA	.37445451 06	ECC	.98255650 00	B	.69635184 05	SLR	.12949653 05	APO	.74237721 06	RCA	.65317950 04
VH	.96777590-01	C3	-.10644903 01	C1	.71845480 05	TFP	.93570142 05	TF	.82938670-02	PER	.38006408 05
TA	.16366492 03	MTA	.00000000 00	EA	.66333368 02	MA	.14771742 02	C3J	-.13184918 01	TFI	.26000000 02

ALL VECTORS REFERENCED TO EARTH EQUATOR PLANE

X	-.22425393 06	Y	-.30597836 05	Z	-.14011687 05	DX	-.14892558 01	DY	-.47830160 00	DZ	.66453005-01
INC	.30830170 02	LAN	.19372343 03	APF	.18941030 03	MX	.85101900-01	MY	-.85669385 00	MZ	.50875692 00
WX	-.12158218 00	WY	.49786476 00	WZ	.85869014 00	PX	.92507144 00	PY	.37043384 00	PZ	-.83794776-01
QX	-.35980633 00	QY	.78416179 00	QZ	-.50559863 00	RX	-.77789739-01	RY	-.31149974-01	RZ	-.99648301 00
BX	.35980628 00	BY	-.78416169 00	BZ	.50559856 00	TX	.37174124 00	TY	-.92833638 00	TZ	.00000000 00
DAP	-.48067233 01	RAP	.21823047 02								
B.T	.60006076 05	B.R	-.35331708 05	B	.69635184 05	THA	.32951033 03				

ALL VECTORS REFERENCED TO ORBIT PLANE OF TARGET

X	-.20678748 06	Y	.90854719 05	Z	-.20167640 05	DX	-.14969888 01	DY	.44443014 00	DZ	.11214978 00
INC	.52127998 02	LAN	.16026293 03	APF	.18986607 03	MX	.36924455-01	MY	-.59062971 00	MZ	.69881216 00
WX	.26657826 00	WY	.74300987 00	WZ	.61389951 00	PX	.96285491 00	PY	-.23370012 00	PZ	-.13525779 00
QX	.42970597-01	QY	.62715291 00	QZ	-.77771006 00	RX	-.13144152 00	RY	.31902936-01	RZ	-.99081044 00
BX	-.42970594-01	BY	-.62715286 00	BZ	.77771000 00	TX	-.23586764 00	TY	-.97178520 00	TZ	.00000000 00
DAP	-.77735287 01	RAP	.34635723 03								
B.T	.43145481 05	B.R	-.54658252 05	B	.69635171 05	THA	.30828644 03				

1 DAYS 2 HRS. 47 MIN. 12.014 SEC. JULIAN DATE 2438044.39529286 JAN. 14,1963 21 29 13.305
TFL 1 DAYS 21 HRS. 29 MIN. 13.304 SEC.

CASE 1 SPACE TRAJECTORIES 14

EARTH-MOON EXTEND,VIEW PERIODS,FINE PRINT CHECK 1

START OF VIEW PERIOD

JOBJET 1 UNIFORM TIME TAU .00000000 00

R	.23107835 06	LAT	-.34290691 01	LONG	.11203447 03						
MIN	.16072002 04	HA	.27422748 03	DEC	-.27493295 01	ELE	.49999998 01	AZI	.90646330 02		
CKM	.34697698 03	CKC	.27365250 03	CKT	.34697698 03	PSS	.10429983 03	PSM	.17833423 02		
UT	.26786670 02	DHA	.41286398-02	DDE	.30077279-04	DEL	.37058986-02	DAZ	-.18162393-02		
ET	.26776947 02	RGE	.23043539 06	DRG	.11038161 01	DDR	-.49137617-05	SLS	.19934505 03		
RDI	.63754947 04	PHI	-.25734820 02	THI	.27684780 02	SPS	.10438674 03	POL	.13158411 03		
DT	.76864962 00	RF1	.00000000 00	RF2	.00000000 00	BF1	.14645869 06				
ESS1	-.10994505 03	ESS2	-.13354505 03	F1	.10500267 06	F2	.10706968 06	PRA	.18938412 03		
RF	.00000000 00	DOP	.31469841-07								

1 DAYS 6 HRS. 0 MIN. 0.000 SEC. JULIAN DATE 2438044.52918161 JAN. 15,1963 00 42 01.291

TFL 2 DAYS 0 HRS. 42 MIN. 1.291 SEC.

GEOCENTRIC EQUATORIAL COORDINATES

X	-.24496055 06	Y	-.37373549 05	Z	-.13005873 05	DX	-.13897755 01	DY	-.46290345 00	DZ	.72937594-01
R	.24813627 06	DEC	-.30044900 01	RA	.18867470 03	V	.14666545 01	PTH	.78633209 02	AZ	.59085569 02
R	.24813626 06	LAT	-.30044900 01	LON	.64415926 02	VE	.17880042 02	PTE	.46126239 01	AZE	.27047743 03
XS	.60183574 08	YS	-.12319149 09	ZS	-.53418373 08	DXS	.27667828 02	DYS	.11266757 02	DZS	.48862840 01
XM	-.39724079 06	YM	.30964671 05	ZM	.45911533 05	DXM	-.14167218 00	DYM	-.90766026 00	DZM	-.33299858 00
XT	-.39724079 06	YT	.30964671 05	ZT	.45911533 05	DXT	-.14167218 00	DYT	-.90766026 00	DZT	-.33299858 00
RS	.14714526 09	VS	.30270848 02	RM	.40108218 06	VM	.97714185 00	RT	.40108218 06	VT	.97714185 00
GED	-.30249271 01	ALT	.24175812 06	LOS	.17177843 03	RAS	.29603721 03	RAM	.17554284 03	LOM	.51284068 02
DUT	.35000000 02	DT	.19200000 04	DR	.14378869 01	SHA	.23969265 06	DES	-.21286492 02	DEM	.65730077 01
DAC	.00000000 00										

GEOCENTRIC CONIC

EPOCH OF PERICENTER PASSAGE JULIAN DATE 2438043.28009893 JAN. 13,1963 18 43 20.548

SMA	.37543816 06	ECC	.98266064 00	B	.69611225 05	SLR	.12906841 05	APO	.74436647 06	RCA	.65098588 04
VH	.96359280-01	C3	-.10617013 01	C1	.71726621 05	TFP	.10792074 06	TF	.22015810-01	PER	.38156265 05
TA	.16473368 03	MTA	.00000000 00	EA	.69814612 02	MA	.16970331 02	C3J	-.13180313 01	TFI	.30000000 02

ALL VECTORS REFERENCED TO EARTH EQUATOR PLANE

X	-.24496055 06	Y	-.37373549 05	Z	-.13005873 05	DX	-.13897755 01	DY	-.46290345 00	DZ	.72937594-01
INC	.31045673 02	LAN	.19367691 03	APF	.18943311 03	MX	.10277743 00	MY	-.85218288 00	MZ	.51305130 00
WX	-.12194078 00	WY	.50109813 00	WZ	.85675645 00	PX	.92530379 00	PY	.36968698 00	PZ	-.84524824-01
QX	-.35908679 00	QY	.78245298 00	QZ	-.50874792 00	RX	-.78492033-01	RY	-.31359952-01	RZ	-.99642137 00
BX	.35908671 00	BY	-.78245281 00	BZ	.50874782 00	TX	.37101470 00	TY	-.92862700 00	TZ	.00000000 00
DAP	-.48487017 01	RAP	.21778211 02								
B.T	.59854046 05	B.R	-.35541748 05	B	.69611225 05	THA	.32929787 03				

ALL VECTORS REFERENCED TO ORBIT PLANE OF TARGET

X	-.23091978 06	Y	.88914896 05	Z	-.18487857 05	DX	-.14176399 01	DY	.35609611 00	DZ	.12069827 00
INC	.52343506 02	LAN	.16224620 03	APF	.18986613 03	MX	.52496362-01	MY	-.59045406 00	MZ	.70797442 00
WX	.24140725 00	WY	.75398416 00	WZ	.61092604 00	PX	.97021058 00	PY	-.20072273 00	PZ	-.13565326 00
QX	.20346382-01	QY	.62547458 00	QZ	-.77997932 00	RX	-.13284015 00	RY	.27482733-01	RZ	-.99075636 00
BX	-.20346381-01	BY	-.62547453 00	BZ	.77997927 00	TX	-.20259545 00	TY	-.97926252 00	TZ	.00000000 00
DAP	-.77963970 01	RAP	.34831122 03								
B.T	.42924076 05	B.R	-.54801873 05	B	.69611217 05	THA	.30807015 03				

```
CASE  1                                          SPACE TRAJECTORIES                                                    15

EARTH-MOON EXTEND,VIEW PERIODS,FINE PRINT            CHECK 1

   1 DAYS  6 HRS. 47 MIN. 32.507 SEC.            JULIAN DATE 2438044.56219673              JAN. 15,1963   01 29 33.798
                                          TFL     2 DAYS  1 HRS. 29 MIN. 33.798 SEC.

                                                  END OF VIEW PERIOD


OOMJET                  1   UNIFORM TIME    TAU .00000000 00
   R        .25221349 06          LAT     -.29081955 01          LONG      .52658771 02
   MIN    .18475418 04  HA      .85463334 02  DEC    -.21627034 01  ELE     .49999998 01  AZI     .27049951 03
   CKM    .34645304 03  CKC     .27353926 03  CKT     .34645304 03  PSS     .10634158 03  PSM     .15380405 02
   UT     .30792363 02  DHA     .41226904-02  DDE     .32464276-04  DEL    -.35425995-02  DAZ    -.21112249-02
   ET     .30782640 02  RGE     .25157817 06  DRG     .18130064 01  DDR    -.35668432-05  SLS     .20010753 03
   RDI    .63726076 04  PHI    -.31212360 02  THI     .13688617 03  SPS     .10643554 03  POL     .82222115 01
   DT     .83917432 00  RF1     .00000000 00  RF2     .00000000 00  BF1     .14418735 06
   ESS1  -.11020753 03  ESS2   -.13380753 03  F1      .10720610 06  F2      .11161187 06  PRA     .18759960 03
   RF     .00000000 00  DOP     .22843596-07

   1 DAYS  8 HRS. 27 MIN. 46.233 SEC.            JULIAN DATE 2438044.63180004              JAN. 15,1963   03 09 47.524
                                          TFL     2 DAYS  3 HRS.  9 MIN. 47.524 SEC.

                                                  EXTREME ELEVATION


JOBJET                  1   UNIFORM TIME    TAU .00000000 00
   R        .26065484 06          LAT     -.27145306 01          LONG      .27855141 02
   MIN    .19477705 04  HA      .35982579 03  DEC    -.21538882 01  ELE     .66418466 02  AZI     .43767836 00
   CKM    .34695223 03  CKC     .27419513 03  CKT     .34695223 03  PSS     .10497848 03  PSM     .15365373 02
   UT     .32462842 02  DHA     .42193926-02  DDE     .28867739-04  DEL    -.10224120-09  DAZ    -.10479076-01
   ET     .32453120 02  RGE     .25479928 06  DRG     .13869094 01  DDR     .24948690-04  SLS     .20021803 03
   RDI    .63754947 04  PHI    -.25734820 02  THI     .27684780 02  SPS     .10507428 03  POL     .67700874 02
   DT     .84991879 00  RF1     .00000000 00  RF2     .00000000 00  BF1     .14555202 06
   ESS1  -.11081803 03  ESS2   -.13441803 03  F1      .10587573 06  F2      .10888283 06  PRA     .18916153 03
   RF     .00000000 00  DOP    -.15978213-06

   1 DAYS 10 HRS.  0 MIN.  0.000 SEC.            JULIAN DATE 2438044.69584827              JAN. 15,1963   04 42 01.291
                                          TFL     2 DAYS  4 HRS. 42 MIN.  1.291 SEC.

        GEOCENTRIC                                                                                  EQUATORIAL COORDINATES

    X -.26435648 06     Y -.43933187 05     Z -.11918052 05    DX -.13064165 01    DY -.44827219 00    DZ  .77962705-01
    R  .26824711 06   DEC -.25464541 01    RA  .18943570 03     V  .13833836 01   PTH  .78882328 02    AZ  .58743506 02
    R  .26824710 06   LAT -.25464541 01   LON  .50126612 01    VE  .19361677 02   PTE  .40202305 01   AZE  .27041059 03
   XS  .60581741 08    YS -.12302871 09    ZS -.53347781 08   DXS  .27632041 02   DYS  .11340579 02   DZS  .49182594 01
   XM -.39902254 06    YM  .17879172 05    ZM  .41088400 05   DXM -.10578471 00   DYM -.90957064 00   DZM -.33680569 00
   XT -.39902254 06    YT  .17879172 05    ZT  .41088400 05   DXT -.10578471 00   DYT -.90957064 00   DZT -.33680569 00
   RS  .14714685 09    VS  .30270905 02    RM  .40153070 06    VM  .97567783 00    RT  .40153070 06    VT  .97567783 00
  GED -.25637846 01   ALT  .26186894 06   LOS  .11179349 03   RAS  .29621653 03   RAM  .17743443 03   LOM  .35301139 03
  DUT  .35000000 02    DT  .19200000 04    DR  .13574220 01   SHA  .25954137 06   DES -.21256752 02   DEM  .58733249 01
  DAC  .00000000 00

                                                  GEOCENTRIC CONIC

EPOCH OF PERICENTER PASSAGE                       JULIAN DATE 2438043.28101014              JAN. 13,1963   18 44 39.276
```

CASE 1 SPACE TRAJECTORIES 16

EARTH-MOON EXTEND,VIEW PERIODS,FINE PRINT CHECK 1

SMA	.37669454 06	ECC	.98280230 00	B	.69560756 05	SLR	.12845147 05	APD	.74691080 06	RCA	.64782792 04
VH	.95801247-01	C3	-.10581603 01	C1	.71554991 05	TFP	.12224201 06	TF	.43885230-01	PER	.38347956 05
TA	.16564431 03	MTA	.00000000 00	EA	.72966540 02	MA	.19126237 02	C3J	-.13175918 01	TFI	.34000000 02

ALL VECTORS REFERENCED TO EARTH EQUATOR PLANE

X	-.26435648 06	Y	-.43933187 05	Z	-.11918052 05	DX	-.13064165 01	DY	-.44827219 00	DZ	.77962705-01
INC	.31349561 02	LAN	.19362219 03	APF	.18945673 03	MX	.11740404 00	MY	-.84706660 00	MZ	.51835793 00
WX	-.12253067 00	WY	.50562352 00	WZ	.85400911 00	PX	.92561492 00	PY	.36868714 00	PZ	-.85479957-01
QX	-.35808274 00	QY	.78000967 00	QZ	-.51318814 00	RX	-.79412180-01	RY	-.31631134-01	RZ	-.99633989 00
BX	.35808267 00	BY	-.78000952 00	BZ	.51318803 00	TX	.37004153 00	TY	-.92901521 00	TZ	.00000000 00
DAP	-.49036250 01	RAP	.21718181 02								
B.T	.59623735 05	B.R	-.35828884 05	B	.69560756 05	THA	.32899765 03				

ALL VECTORS REFERENCED TO ORBIT PLANE OF TARGET

X	-.25387669 06	Y	.84994879 05	Z	-.16703299 05	DX	-.13486890 01	DY	.28052180 00	DZ	.12686845 00
INC	.52647424 02	LAN	.16421943 03	APF	.18986292 03	MX	.65380986-01	MY	-.58831350 00	MZ	.71845628 00
WX	.21618065 00	WY	.76495695 00	WZ	.60671806 00	PX	.97635074 00	PY	-.16792547 00	PZ	-.13616273 00
QX	-.22752043-02	QY	.62180535 00	QZ	-.78316851 00	RX	-.13419238 00	RY	.23080146-01	RZ	-.99068649 00
BX	.22752043-02	BY	-.62180535 00	BZ	.78316852 00	TX	-.16950415 00	TY	-.98552947 00	TZ	.00000000 00
DAP	-.78258616 01	RAP	.35024100 03								
B.T	.42600528 05	B.R	-.54989945 05	B	.69560757 05	THA	.30776482 03				

1 DAYS 12 HRS. 46 MIN. 9.614 SEC. JULIAN DATE 2438044.81123732 JAN. 15,1963 07 28 10.905
TFL 2 DAYS 7 HRS. 28 MIN. 10.905 SEC.

START OF VIEW PERIOD

JETGOLD-2 1 UNIFORM TIME TAU .00000000 00

R	.28153219 06	LAT	-.22648565 01	LONG	.32382062 03				
MIN	.22061602 04	HA	.27828170 03	DEC	-.30200151 01	ELE	.49999998 01	AZI	.97264813 02
CKM	.34651487 03	CKC	.27412804 03	CKT	.34651487 03	PSS	.10317898 03	PSM	.13952233 02
UT	.36769336 02	DHA	.41500256-02	DDE	.26589033-04	DEL	.33792329-02	DAZ	.24084144-02
ET	.36759614 02	RGE	.28090526 06	DRG	.93521243 00	DDR	-.78132589-06	SLS	.20106526 03
RDI	.63720326 04	PHI	.35205980 02	THI	.24315175 03	SPS	.10328543 03	POL	.19310569 03
DT	.93699896 00	RF1	.00000000 00	RF2	.00000000 00	BF1	.14699868 06		
ESS1	-.11116527 03	ESS2	-.13476527 03	F1	.10448992 06	F2	.10598981 06	PRA	.19094687 03
RF	.00000000 00	DOP	.50039467-08						

1 DAYS 14 HRS. 0 MIN. 0.000 SEC. JULIAN DATE 2438044.86251494 JAN. 15,1963 08 42 01.291
TFL 2 DAYS 8 HRS. 42 MIN. 1.291 SEC.

GEOCENTRIC EQUATORIAL COORDINATES

X	-.28264410 06	Y	-.50286776 05	Z	-.10764698 05	DX	-.12353433 01	DY	-.43425440 00	DZ	.82121183-01
R	.28728439 06	DEC	-.21474046 01	RA	.19008825 03	V	.13120190 01	PTH	.79094623 02	AZ	.58284868 02
R	.28728440 06	LAT	-.21474046 01	LON	.30550095 03	VE	.20763662 02	PTE	.35573221 01	AZE	.27036076 03
XS	.60979392 08	YS	-.12286487 09	ZS	-.53276731 08	DXS	.27596018 02	DYS	.11414316 02	DZS	.49501970 01
XM	-.40028725 06	YM	.47746126 04	ZM	.36213635 05	DXM	-.69868539-01	DYM	-.91030937 00	DZM	-.34016999 00
XT	-.40028725 06	YT	.47746126 04	ZT	.36213635 05	DXT	-.69868539-01	DYT	-.91030937 00	DZT	-.34016999 00
RS	.14714847 09	VS	.30270964 02	RM	.40195037 06	VM	.97429994 00	RT	.40195037 06	VT	.97429994 00
GED	-.21620248 01	ALT	.28090621 06	LOS	.51808482 02	RAS	.29639579 03	RAM	.17931661 03	LOM	.29472930 03
DUT	.35000000 02	DT	.19200000 04	DR	.12883252 01	SHA	.27831023 06	DES	-.21226826 02	DEM	.51690606 01
DAC	.00000000 00										

```
CASE  1                                          SPACE TRAJECTORIES                                                    17

EARTH-MOON EXTEND,VIEW PERIODS,FINE PRINT            CHECK 1

                                                      GEOCENTRIC CONIC

EPOCH OF PERICENTER PASSAGE                        JULIAN DATE 2438043.28244968              JAN. 13,1963   18 46 43.652
  SMA  .37833249 06   ECC  .98299593 00    B  .69472192 05   SLR  .12756985 05   APO  .75023179 06   RCA  .64331877 04
   VH  .95049302-01    C3 -.10535791 01   C1  .71309011 05   TFP  .13651764 06    TF  .78433990-01   PER  .38598346 05
   TA  .16643992 03   MTA  .00000000 00   EA  .75828851 02    MA  .21221268 02   C3J -.13171642 01   TFI  .38000000 02

                                                                 ALL VECTORS REFERENCED TO EARTH EQUATOR PLANE
    X -.28264410 06     Y -.50286776 05    Z -.10764698 05   DX -.12353433 01   DY -.43425440 00   DZ  .82121183-01
  INC  .31780168 02   LAN  .19355807 03  APF  .18948018 03   MX  .12961430 00   MY -.84097070 00   MZ  .52532723 00
   WX -.12346584 00    WY  .51198529 00   WZ  .85007503 00   PX  .92603263 00   PY  .36734036 00   PZ -.86744651-01
   QX -.35667878 00    QY  .77648722 00   QZ -.51946905 00   RX -.80632315-01   RY -.31985377-01   RZ -.99623057 00
   BX  .35667873 00    BY -.77648713 00   BZ  .51946899 00   TX  .36873025 00   TY -.92953644 00   TZ  .00000000 00
  DAP -.49763571 01   RAP  .21637332 02
  B.T  .59280019 05   B.R -.36225196 05    B  .69472192 05   THA  .32857148 03

                                                                 ALL VECTORS REFERENCED TO ORBIT PLANE OF TARGET
    X -.27572376 06     Y  .79299705 05    Z -.14841952 05   DX -.12875962 01   DY  .21495722 00   DZ  .13146530 00
  INC  .53078070 02   LAN  .16618225 03  APF  .18985487 03   MX  .76063103-01   MY -.58386861 00   MZ  .73035792 00
   WX  .19093725 00    WY  .77631924 00   WZ  .60072623 00   PX  .98128785 00   PY -.13546931 00   PZ -.13682934 00
   QX -.24843126-01    QY  .61561111 00   QZ -.78765876 00   RX -.13554380 00   RY  .18712171-01   RZ -.99059466 00
   BX  .24843120-01    BY -.61561095 00   BZ  .78765855 00   TX -.13675554 00   TY -.99060483 00   TZ  .00000000 00
  DAP -.78644163 01   RAP  .35213985 03
  B.T  .42129990 05   B.R -.55239899 05    B  .69472170 05   THA  .30733179 03

   1 DAYS 14 HRS.  7 MIN. 37.090 SEC.              JULIAN DATE 2438044.86780533              JAN. 15,1963   08 49 38.381
                                             TFL    2 DAYS  8 HRS. 49 MIN. 38.381 SEC.

                                                     END OF VIEW PERIOD

JOBJET                 1   UNIFORM TIME    TAU .00000000 00
   R        .28787280 06        LAT     -.21355312 01        LONG     .30361041 03
   MIN    .22876182 04  HA     .85214317 02  DEC   -.15877150 01  ELE    .49999998 01  AZI    .27064718 03
   CKM    .34700281 03  CKC    .27472376 03  CKT    .34700281 03  PSS    .10561412 03  PSM    .12600749 02
   UT     .38126969 02  DHA    .41378979-02  DDE    .25811188-04  DEL   -.37384276-02  DAZ   -.17770388-02
   ET     .38117247 02  RGE    .28724707 06  DRG    .17002087 01  DDR   -.19024036-05  SLS    .20125918 03
   RDI    .63754947 04  PHI   -.25734820 02  THI    .27684780 02  SPS    .10572178 03  POL    .31271747 01
   DT     .95815295 00  RF1    .00000000 00  RF2    .00000000 00  BF1    .14454861 06
   ESS1  -.11185918 03  ESS2  -.13545918 03  F1     .10685965 06  F2     .11088943 06  PRA    .18896752 03
   RF     .00000000 00  DOP    .12183810-07

   1 DAYS 18 HRS.  0 MIN.  0.000 SEC.              JULIAN DATE 2438045.02918161              JAN. 15,1963   12 42 01.291
                                             TFL    2 DAYS 12 HRS. 42 MIN.  1.291 SEC.
```

CASE 1 SPACE TRAJECTORIES 18

EARTH-MOON EXTEND,VIEW PERIODS,FINE PRINT CHECK 1

GEOCENTRIC EQUATORIAL COORDINATES

X	-.29998162 06	Y	-.56441613 05	Z	-.95550277 04	DX	-.11741498 01	DY	-.42062253 00	DZ	.85851988-01
R	.30539471 06	DEC	-.17929315 01	RA	.19065564 03	V	.12501686 01	PTH	.79289584 02	AZ	.57642844 02
R	.30539469 06	LAT	-.17929315 01	LON	.24590407 03	VE	.22097087 02	PTE	.31867468 01	AZE	.27032292 03
XS	.61376522 08	YS	-.12269997 09	ZS	-.53205219 08	DXS	.27559759 02	DYS	.11487966 02	DZS	.49820958 01
XM	-.40103480 06	YM	-.83321944 04	ZM	.31293615 05	DXM	-.33962410-01	DYM	-.90988339 00	DZM	-.34309075 00
XT	-.40103480 06	YT	-.83321944 04	ZT	.31293615 05	DXT	-.33962410-01	DYT	-.90988339 00	DZT	-.34309075 00
RS	.14715011 09	VS	.30271025 02	RM	.40234018 06	VM	.97301206 00	RT	.40234018 06	VT	.97301206 00
GED	-.18051418 01	ALT	.29901652 06	LOS	.35182339 03	RAS	.29657496 03	RAM	.18119024 03	LOM	.23643868 03
DUT	.35000000 02	DT	.19200000 04	DR	.12283895 01	SHA	.29614200 06	DES	-.21196710 02	DEM	.44609135 01
DAC	.00000000 00										

GEOCENTRIC CONIC

EPOCH OF PERICENTER PASSAGE JULIAN DATE 2438043.28473432 JAN. 13,1963 18 50 01.045

SMA	.38053115 06	ECC	.98326403 00	B	.69327578 05	SLR	.12630530 05	APO	.75469375 06	RCA	.63685571 04
VH	.94017870-01	C3	-.10474916 01	C1	.70954702 05	TFP	.15072024 06	TF	.13326502 00	PER	.38935303 05
TA	.16715082 03	MTA	.00000000 00	EA	.78415541 02	MA	.23226260 02	C3J	-.13167378 01	TFI	.42000000 02

ALL VECTORS REFERENCED TO EARTH EQUATOR PLANE

X	-.29998162 06	Y	-.56441613 05	Z	-.95550277 04	DX	-.11741498 01	DY	-.42062253 00	DZ	.85851988-01
INC	.32401381 02	LAN	.19348275 03	APF	.18950184 03	MX	.13973906 00	MY	-.83325848 00	MZ	.53493337 00
WX	-.12493442 00	WY	.52107967 00	WZ	.84431499 00	PX	.92660189 00	PY	.36549186 00	PZ	-.88457396-01
QX	-.35468337 00	QY	.77129250 00	QZ	-.52849589 00	RX	-.82287357-01	RY	-.32457692-01	RZ	-.99608000 00
BX	.35468331 00	BY	-.77129237 00	BZ	.52849580 00	TX	.36693023 00	TY	-.93024848 00	TZ	.00000000 00
DAP	-.50748681 01	RAP	.21526422 02								
B.T	.58764660 05	B.R	-.36783527 05	B	.69327578 05	THA	.32795564 03				

ALL VECTORS REFERENCED TO ORBIT PLANE OF TARGET

X	-.29650446 06	Y	.72000273 05	Z	-.12922478 05	DX	-.12328128 01	DY	.15769115 00	DZ	.13500973 00
INC	.53699383 02	LAN	.16813385 03	APF	.18983954 03	MX	.84738252-01	MY	-.57634339 00	MZ	.74409323 00
WX	.16571837 00	WY	.78870015 00	WZ	.59202182 00	PX	.98503847 00	PY	-.10359265 00	PZ	-.13772371 00
QX	-.47293470-01	QY	.60598756 00	QZ	-.79406717 00	RX	-.13696836 00	RY	.14404428-01	RZ	-.99047070 00
BX	.47293464-01	BY	-.60598748 00	BZ	.79406706 00	TX	-.10458931 00	TY	-.99451550 00	TZ	.00000000 00
DAP	-.79161499 01	RAP	.35399649 03								
B.T	.41438311 05	B.R	-.55580389 05	B	.69327579 05	THA	.30670660 03				

1 DAYS 18 HRS. 12 MIN. 8.890 SEC. JULIAN DATE 2438045.03761782 JAN. 15,1963 12 54 10.181

TFL 2 DAYS 12 HRS. 54 MIN. 10.181 SEC.

EXTREME ELEVATION

JETGOLD-2 1 UNIFORM TIME TAU .00000000 00

R	.30628903 06	LAT	-.17759704 01	LONG	.24288548 03						
MIN	.25321481 04	HA	.27087593 00	DEC	-.25051007 01	ELE	.52288061 02	AZI	.18044290 03		
CKM	.34654924 03	CKC	.27457178 03	CKT	.34654924 03	PSS	.10385749 03	PSM	.11498740 02		
UT	.42202469 02	DHA	.42131091-02	DDE	.26580434-04	DEL	-.30381102-09	DAZ	.68733928-02		
ET	.42192746 02	RGE	.30122334 06	DRG	.12256712 01	DDR	.23807843-04	SLS	.20167184 03		
RDI	.63720326 04	PHI	.35205980 02	THI	.24315175 03	SPS	.10397130 03	POL	.24781051 03		
DT	.10047728 01	RF1	.00000000 00	RF2	.00000000 00	BF1	.14606842 06				
ESS1	-.11177184 03	ESS2	-.13537184 03	F1	.10537684 06	F2	.10785013 06	PRA	.19067780 03		
RF	.00000000 00	DOP	-.15247566-06								

CASE 1 SPACE TRAJECTORIES 19

EARTH-MOON EXTEND,VIEW PERIODS,FINE PRINT CHECK 1

1 DAYS 19 HRS. 41 MIN. 29.175 SEC. JULIAN DATE 2438045.09965817 JAN. 15,1963 14 23 30.466
TFL 2 DAYS 14 HRS. 23 MIN. 30.466 SEC.

START OF VIEW PERIOD

OOMJET 1 UNIFORM TIME TAU .00000000 00

R	.31280406 06	LAT	-.16537911 01	LONG	.22068133 03				
MIN	.26214862 04	HA	.27521019 03	DEC	-.10508152 01	ELE	.49999998 01	AZI	.88195693 02
CKM	.34831331 03	CKC	.27643884 03	CKT	.34831331 03	PSS	.10336972 03	PSM	.10757978 02
UT	.43691437 02	DHA	.41536158-02	DDE	.18783696-04	DEL	.35408862-02	DAZ	-.21783580-02
ET	.43681714 02	RGE	.31218422 06	DRG	.81407121 00	DDR	-.10986682-05	SLS	.20198229 03
RDI	.63726076 04	PHI	-.31212360 02	THI	.13688617 03	SPS	.10348792 03	POL	.12668032 03
DT	.10413343 01	RF1	.00000000 00	RF2	.00000000 00	BF1	.14738666 06		
ESS1	-.11208229 03	ESS2	-.13568229 03	F1	.10410189 06	F2	.10521393 06	PRA	.19186856 03
RF	.00000000 00	DUP	.70363434-08						

1 DAYS 22 HRS. 0 MIN. 0.000 SEC. JULIAN DATE 2438045.19584827 JAN. 15,1963 16 42 01.291
TFL 2 DAYS 16 HRS. 42 MIN. 1.291 SEC.

GEOCENTRIC EQUATORIAL COORDINATES

X	-.31650019 06	Y	-.62401038 05	Z	-.82922693 04	DX	-.11214425 01	DY	-.40704695 00	DZ	.89567332-01
R	.32269958 06	DEC	-.14724650 01	RA	.19115336 03	V	.11963874 01	PTH	.79488044 02	AZ	.56700303 02
R	.32269958 06	LAT	-.14724650 01	LON	.18623752 03	VE	.23371350 02	PTE	.28849839 01	AZE	.27029415 03
XS	.61773128 08	YS	-.12253401 09	ZS	-.53133249 08	DXS	.27523261 02	DYS	.11561529 02	DZS	.50139561 01
XM	-.40126560 06	YM	-.21424521 05	ZM	.26334733 05	DXM	.18955177-02	DYM	-.90830024 00	DZM	-.34556759 00
XT	-.40126560 06	YT	-.21424521 05	ZT	.26334733 05	DXT	.18955177-02	DYT	-.90830024 00	DZT	-.34556759 00
RS	.14715178 09	VS	.30271085 02	RM	.40269915 06	VM	.97181782 00	RT	.40269915 06	VT	.97181782 00
GED	-.14824950 01	ALT	.31632139 06	LOS	.29183822 03	RAS	.29675406 03	RAM	.18305625 03	LOM	.17814042 03
DUT	.35000000 02	DT	.19200000 04	DR	.11763083 01	SHA	.31315380 06	DES	-.21166405 02	DEM	.37495646 01
DAC	.00000000 00										

GEOCENTRIC CONIC

EPOCH OF PERICENTER PASSAGE JULIAN DATE 2438043.28842612 JAN. 13,1963 18 55 20.018

SMA	.38360941 06	ECC	.98364354 00	B	.69098047 05	SLR	.12446355 05	APO	.76094432 06	RCA	.62744919 04
VH	.92563248-01	C3	-.10390861 01	C1	.70435481 05	TFP	.16480127 06	TF	.22186852 00	PER	.39408699 05
TA	.16780046 03	MTA	.00000000 00	EA	.80710613 02	MA	.25091100 02	C3J	-.13162984 01	TFI	.46000000 02

ALL VECTORS REFERENCED TO EARTH EQUATOR PLANE

X	-.31650019 06	Y	-.62401038 05	Z	-.82922693 04	DX	-.11214425 01	DY	-.40704695 00	DZ	.89567332-01
INC	.33328484 02	LAN	.19339360 03	APF	.18951889 03	MX	.14783420 00	MY	-.82275326 00	MZ	.54883710 00
WX	-.12727161 00	WY	.53449455 00	WZ	.83553430 00	PX	.92740054 00	PY	.36286674 00	PZ	-.90862259-01
QX	-.35175303 00	QY	.76331076 00	QZ	-.54187316 00	RX	-.84615723-01	RY	-.33107843-01	RZ	-.99586346 00
BX	.35175302 00	BY	-.76331075 00	BZ	.54187315 00	TX	.36437399 00	TY	-.93125270 00	TZ	.00000000 00
DAP	-.52132144 01	RAP	.21369064 02								
B.T	.57973596 05	B.R	-.37597901 05	B	.69098047 05	THA	.32703518 03				

ALL VECTORS REFERENCED TO ORBIT PLANE OF TARGET

X	-.31625126 06	Y	.63246346 05	Z	-.10957196 05	DX	-.11835203 01	DY	.10775624 00	DZ	.13788054 00
INC	.54626596 02	LAN	.17007288 03	APF	.18981292 03	MX	.91304348-01	MY	-.56416920 00	MZ	.76057590 00
WX	.14057044 00	WY	.80318835 00	WZ	.57890271 00	PX	.98762549 00	PY	-.72686683-01	PZ	-.13896956 00
QX	-.69540235-01	QY	.59127406 00	QZ	-.80346687 00	RX	-.13859471 00	RY	.10200212-01	RZ	-.99029665 00
BX	.69540239-01	BY	-.59127410 00	BZ	.80346692 00	TX	-.73398898-01	TY	-.99730267 00	TZ	.00000000 00
DAP	-.79882237 01	RAP	.35579076 03								

```
CASE  1                                          SPACE TRAJECTORIES                                                  20

EARTH-MOON EXTEND,VIEW PERIODS,FINE PRINT                CHECK 1
  B.T  .40392993 05   B.R -.56061982 05     B  .69098046 05   THA  .30577298 03

   1 DAYS 23 HRS. 39 MIN.  3.854 SEC.              JULIAN DATE 2438045.26464287              JAN. 15,1963   18 21 05.145
                                            TFL    2 DAYS 18 HRS. 21 MIN.  5.145 SEC.

                                                   END OF VIEW PERIOD

JETGOLD-2                1   UNIFORM TIME    TAU .00000000 00
   R        .32963326 06          LAT     -.13480829 01          LONG      .16159128 03
   MIN     .28590642 04  HA      .82457901 02  DEC    -.19906116 01  ELE     .49999998 01  AZI     .26400715 03
   CKM     .34664652 03  CKC     .27503110 03  CKT     .34664652 03  PSS     .10450046 03  PSM     .88541327 01
   UT      .47651070 02  DHA     .41527900-02  DDE     .25146645-04  DEL    -.33599993-02  DAZ     .24456756-02
   ET      .47641348 02  RGE     .32901677 06  DRG     .15288002 01  DDR     .47512163-06  SLS     .20243843 03
   RDI     .63720326 04  PHI     .35205980 02  THI     .24315175 03  SPS     .10462441 03  POL     .30194296 03
   DT      .10974817 01  RF1     .00000000 00  RF2     .00000000 00  BF1     .14509758 06
   ESS1   -.11253843 03  ESS2   -.13613843 03  F1      .10631919 06  F2      .10979160 06  PRA     .19044354 03
   RF      .00000000 00  DOP    -.30428831-08

   2 DAYS  0 HRS.  0 MIN.  0.000 SEC.              JULIAN DATE 2438045.27918161              JAN. 15,1963   18 42 01.291
                                            TFL    2 DAYS 18 HRS. 42 MIN.  1.291 SEC.

        GEOCENTRIC                                                                                  EQUATORIAL COORDINATES

    X -.32448931 06     Y -.65306959 05     Z -.76402610 04    DX -.10980913 01    DY -.40012467 00    DZ  .91574252-01
    R  .33108410 06   DEC -.13223024 01    RA  .19137937 03     V  .11723011 01   PTH  .79596949 02    AZ  .56051755 02
    R  .33108409 06   LAT -.13223024 01   LON  .15638140 03    VE  .23989020 02   PTE  .27549781 01   AZE  .27028267 03
   XS  .61971232 08    YS -.12245063 09    ZS -.53097092 08   DXS  .27504924 02   DYS  .11598277 02   DZS  .50298717 01
   XM -.40118750 06    YM -.27960058 05    ZM  .23842718 05   DXM  .19794663-01   DYM -.90707726 00   DZM -.34663948 00
   XT -.40118750 06    YT -.27960058 05    ZT  .23842718 05   DXT  .19794663-01   DYT -.90707726 00   DZT -.34663948 00
   RS  .14715261 09    VS  .30271116 02    RM  .40286678 06    VM  .97125687 00    RT  .40286678 06    VT  .97125687 00
  GED -.13313104 01   ALT  .32470591 06   LOS  .26184562 03   RAS  .29684358 03   RAM  .18398668 03   LOM  .14898871 03
  DUT  .35000000 02    DT  .19200000 04    DR  .11530307 01   SHA  .32138448 06   DES -.21151183 02   DEM  .33928972 01
  DAC  .00000000 00

                                                   GEOCENTRIC CONIC

EPOCH OF PERICENTER PASSAGE                      JULIAN DATE 2438043.29110643              JAN. 13,1963   18 59 11.596
  SMA  .38565418 06   ECC  .98389369 00     B  .68937445 05   SLR  .12322880 05   APO  .76509689 06   RCA  .62114623 04
   VH  .91603075-01    C3 -.10335768 01    C1  .70085230 05   TFP  .17176969 06    TF  .28619576 00   PER  .[illegible]24212 05
   TA  .16810886 03   MTA  .00000000 00    EA  .81731259 02    MA  .25944332 02   C3J -.13160666 01   --  .48000000 02

                                                                ALL VECTORS REFERENCE -- EARTH EQUATOR PLANE
    X -.32448931 06     Y -.65306959 05     Z -.76402610 04    DX -.10980913 01    DY  .40012467 00    DZ  .91574252-01
  INC  .33970915 02   LAN  .19334264 03   APF  .18952421 03    MX  .15103874 0     MY -.81577794 00    MZ  .55829500 00
   WX -.12895003 00    WY  .54368900 00    WZ  .82932131 00    PX  .927[illegible] 00    PY  .36111231 00    PZ -.92456926-01
   QX -.34974592 00    QY  .75762779 00    QZ -.55106946 00    RX      62394-01    RY -.33530958-01    RZ -.99571668 00
   BX  .34974599 00    BY -.75762793 00    BZ  .55106957 [illegible]    X  .36266572 00    TY -.93191930 00    TZ  .00000000 00
  DAP -.53049686 01   RAP  .21264000 02
  B.T  .57417237 05   B.R -.38152747 05     B      37445 05   THA  .32639666 03
```

EARTH-MOON EXTEND,VIEW PERIODS,FINE PRINT CHECK 1

ALL VECTORS REFERENCED TO ORBIT PLANE OF TARGET

X	-.32574637 06	Y	.58367613 05	Z	-.99598435 04	DX	-.11608722 01	DY	.85428964-01	DZ	.13916706 00
INC	.55269080 02	LAN	.17103695 03	APF	.18979339 03	MX	.93645415-01	MY	-.55542017 00	MZ	.77037506 00
WX	.12803996 00	WY	.81180129 00	WZ	.56972308 00	PX	.98849242 00	PY	-.57802628-01	PZ	-.13979121 00
QX	-.80551235-01	QY	.58106579 00	QZ	-.80986045 00	RX	-.13955282 00	RY	.81604263-02	RZ	-.99018099 00
BX	.80551240-01	BY	-.58106583 00	BZ	.80986050 00	TX	-.58375821-01	TY	-.99829468 00	TZ	.00000000 00
DAP	-.80357653 01	RAP	.35665341 03								
B.T	.39664709 05	B.R	-.56383321 05	B	.68937422 05	THA	.30512574 03				

2 DAYS 1 HRS. 17 MIN. 44.292 SEC. JULIAN DATE 2438045.33316647 JAN. 15,1963 19 59 45.583
TFL 2 DAYS 19 HRS. 59 MIN. 45.583 SEC.

EXTREME ELEVATION

OOMJET 1 UNIFORM TIME TAU .00000000 00

R	.33642901 06	LAT	-.12279792 01	LONG	.13703250 03						
MIN	.29577382 04	HA	.35985126 03	DEC	-.67655926 00	ELE	.59463872 02	AZI	.29383634 00		
CKM	.34823901 03	CKC	.27672642 03	CKT	.34823901 03	PSS	.10407220 03	PSM	.82624190 01		
UT	.49295636 02	DHA	.42172713-02	DDE	.18428727-04	DEL	-.35575372-09	DAZ	-.82689099-02		
ET	.49285913 02	RGE	.33092465 06	DRG	.11389960 01	DDR	.26108401-04	SLS	.20248865 03		
RDI	.63726076 04	PHI	-.31212360 02	THI	.13688617 03	SPS	.10419711 03	POL	.68239188 02		
DT	.11038456 01	RF1	.00000000 00	RF2	.00000000 00	BF1	.14634601 06				
ESS1	-.11258865 03	ESS2	-.13618865 03	F1	.10511353 06	F2	.10729500 06	PRA	.19152063 03		
RF	.00000000 00	DOP	-.16720942-06								

2 DAYS 3 HRS. 0 MIN. 19.403 SEC. JULIAN DATE 2438045.40440617 JAN. 15,1963 21 42 20.694
TFL 2 DAYS 21 HRS. 42 MIN. 20.693 SEC.

START OF VIEW PERIOD

JOBJET 1 UNIFORM TIME TAU .00000000 00

R	.34338522 06	LAT	-.11065538 01	LONG	.11149041 03						
MIN	.30603233 04	HA	.27523987 03	DEC	-.64575084 00	ELE	.49999998 01	AZI	.88303110 02		
CKM	.34861635 03	CKC	.27720902 03	CKT	.34861635 03	PSS	.10310892 03	PSM	.75497916 01		
UT	.51005389 02	DHA	.41600240-02	DDE	.17220899-04	DEL	.37382721-02	DAZ	-.18315846-02		
ET	.50995667 02	RGE	.34277081 06	DRG	.70808282 00	DDR	.34944046-07	SLS	.20279414 03		
RDI	.63754947 04	PHI	-.25734820 02	THI	.27684780 02	SPS	.10323883 03	POL	.13233780 03		
DT	.11433602 01	RF1	.00000000 00	RF2	.00000000 00	BF1	.14772610 06				
ESS1	-.11339415 03	ESS2	-.13699415 03	F1	.10378316 06	F2	.10453510 06	PRA	.19264713 03		
RF	.00000000 00	DOP	-.22379668-09								

2 DAYS 6 HRS. 53 MIN. 26.531 SEC. JULIAN DATE 2438045.56629423 JAN. 16,1963 01 35 27.822
TFL 3 DAYS 1 HRS. 35 MIN. 27.822 SEC.

END OF VIEW PERIOD

EARTH-MOON EXTEND,VIEW PERIODS,FINE PRINT CHECK 1

OOMJET 1 UNIFORM TIME TAU .00000000 00

R	.35883000 06		LAT	-.84029341 00			LONG	.53410437 02			
MIN	.32934421 04	HA	.84341871 02	DEC	-.31349970 00	ELE	.49999998 01	AZI	.27267030 03		
CKM	.34817590 03	CKC	.27700973 03	CKT	.34817590 03	PSS	.10475396 03	PSM	.56116351 01		
UT	.54890702 02	DHA	.41578625-02	DDE	.17477619-04	DEL	-.35612443-02	DAZ	-.21541577-02		
ET	.54880980 02	RGE	.35821843 06	DRG	.14825731 01	DDR	.85456149-06	SLS	.20317703 03		
RDI	.63726076 04	PHI	-.31212360 02	THI	.13688617 03	SPS	.10488875 03	POL	.93710843 01		
DT	.11948879 01	RF1	.00000000 00	RF2	.00000000 00	BF1	.14524563 06				
ESS1	-.11327703 03	ESS2	-.13687703 03	F1	.10618061 06	F2	.10949553 06	PRA	.19118582 03		
RF	.00000000 00	DOP	-.54729789-08								

2 DAYS 8 HRS. 36 MIN. 10.801 SEC. JULIAN DATE 2438045.63763995 JAN. 16,1963 03 18 12.092

TFL 3 DAYS 3 HRS. 18 MIN. 12.092 SEC.

EXTREME ELEVATION

JOBJET 1 UNIFORM TIME TAU .00000000 00

R	.36550409 06		LAT	-.72541048 00			LONG	.27796956 02			
MIN	.33961800 04	HA	.35988603 03	DEC	-.29611431 00	ELE	.64561052 02	AZI	.26779352 00		
CKM	.34848742 03	CKC	.27743484 03	CKT	.34848742 03	PSS	.10389784 03	PSM	.49954036 01		
UT	.56603000 02	DHA	.42224265-02	DDE	.17613371-04	DEL	.22008133-09	DAZ	-.97390907-02		
ET	.56593277 02	RGE	.35973648 06	DRG	.10774800 01	DDR	.29162778-04	SLS	.20321376 03		
RDI	.63754947 04	PHI	-.25734820 02	THI	.27684780 02	SPS	.10403373 03	POL	.68412013 02		
DT	.11999515 01	RF1	.00000000 00	RF2	.00000000 00	BF1	.14654303 06				
ESS1	-.11381376 03	ESS2	-.13741376 03	F1	.10491952 06	F2	.10690100 06	PRA	.19219505 03		
RF	.00000000 00	DOP	-.18677096-06								

2 DAYS 10 HRS. 46 MIN. 40.356 SEC. JULIAN DATE 2438045.72825981 JAN. 16,1963 05 28 41.648

TFL 3 DAYS 5 HRS. 28 MIN. 41.648 SEC.

SELENOCENTRIC EQUATORIAL COORDINATES

X	.33333009 05	Y	-.17042711 05	Z	-.14087457 05	DX	-.11338206 01	DY	.54357606 00	DZ	.46249259 00		
R	.39999999 05	DEC	-.20621105 02	RA	.33291996 03	V	.13397475 01	PTH	-.88561246 02	AZ	.25300973 03		
R	.39999995 05	LAT	-.95769060 01	LON	.32070310 03	VR	.13464399 01	PTR	-.84107219 02	AZR	.27131801 03		
LTS	.91543316-01	LNS	.28894816 03	LTE	-.63669930 01	LNE	.10451461 01						
ALT	.38261999 05	SHA	-.21815171 05	ALP	.13797608 02	DR	-.13393252 01	DP	.48182989-04	ASD	.24902844 01		
HGE	.28387468 03	SVL	-.64371262 01	HNG	.14750367 03	SIA	.13350308 03						

SELENOCENTRIC CONIC

EPOCH OF PERICENTER PASSAGE JULIAN DATE 2438046.03278273 JAN. 16,1963 12 47 12.428

SMA	-.31620135 04	ECC	.10568029 01	B	.10807902 04	SLR	.36942522 03	APO	.00000000 00	RCA	.17961139 03		
VH	.12449440 01	C3	.15498855 01	C1	.13455348 04	TFP	-.26310780 05	TF	.66086426 02	LTF	.66047447 02		
TA	-.15963769 03	MTA	.16112919 03	EA	-.18621981 03	MA	-.59352968 03	C3J	-.13142632 01	TFI	.58777876 02		
ZAE	.14142159 03	ZAP	.14547877 03	ZAC	.88756354 02	DEF	.14225840 03	IR	.37432343 04	GP	.63217541 01		
OP1	.13874679 02	OY	-.92866243 01	OP2	-.45993366 02								

EARTH-MOON EXTEND,VIEW PERIODS,FINE PRINT CHECK 1

ALL VECTORS REFERENCED TO EARTH EQUATOR PLANE

X	.33333009 05	Y	-.17042711 05	Z	-.14087457 05	DX	-.11338206 01	DY	.54357606 00	DZ	.46249259 00
INC	.15351777 03	LAN	.20197619 03	APF	.31807145 02	MX	-.52699105 00	MY	-.80465443 00	MZ	-.27348470 00
WX	-.16686539 00	WY	.41350082 00	WZ	-.89507274 00	PX	-.96462131 00	PY	.11945940 00	PZ	.23501823 00
QX	.20410062 00	QY	.90262496 00	QZ	.37894002 00	RX	-.31118895 00	RY	.14883213 00	RZ	-.93862155 00
BX	-.50512721 00	BY	-.81547876 00	BZ	-.28256134 00	TX	.43146172 00	TY	.90213125 00	TZ	.00000000 00
SXI	-.84675983 00	SYI	.40497927 00	SZI	.34494864 00	DAI	.20178660 02	RAI	.15443964 03		
SXO	.97878652 00	SYO	.17890229 00	SZO	-.99823481-01	DAO	-.57290072 01	RAO	.10358165 02		
ETE	.15534885 03	ETS	.35188981 03	ETC	.23880395 03						
B.T	-.10306544 04	B.R	.32535968 03	B	.10807902 04	THA	.16247999 03				

ALL VECTORS REFERENCED TO ORBIT PLANE OF TARGET

X	.26755551 05	Y	-.29404394 05	Z	-.44183078 04	DX	-.92076773 00	DY	.96194705 00	DZ	.14754009 00
INC	.17363042 03	LAN	.21610644 03	APF	.63482949 02	MX	-.45505049 00	MY	-.85123901 00	MZ	-.46905622-01
WX	-.65470780-01	WY	.89761607-01	WZ	-.99382697 00	PX	-.88474288 00	PY	.45535815 00	PZ	.99412173-01
QX	.46147847 00	QY	.88578149 00	QZ	.49602017-01	RX	-.76213215-01	RY	.79474124-01	RZ	-.99391920 00
BX	-.72281282 00	BY	-.69088573 00	BZ	-.14783155-01	TX	.72175901 00	TY	.69214445 00	TZ	.00000000 00
SXI	-.68793567 00	SYI	.71737014 00	SZI	.11011172 00	DAI	.63217566 01	RAI	.13380010 03		
SXO	.98644539 00	SYO	-.14439783 00	SZO	-.78026399-01	DAO	-.44751322 01	RAO	.35167207 03		
ETE	.17201662 03	ETS	.85575870 01	ETC	.25547172 03						
B.T	-.10806702 04	B.R	.16075247 02	B	.10807898 04	THA	.17914777 03				

ALL VECTORS REFERENCED TO TRUE LUNAR EQU. PLANE

X	.30523563 05	Y	-.24980486 05	Z	-.66548513 04	DX	-.10428240 01	DY	.81017476 00	DZ	.22596056 00
INC	.16900622 03	LAN	.26041685 03	APF	.98896939 02	MX	-.42942965 00	MY	-.88425711 00	MZ	.53661670-01
WX	-.18803996 00	WY	.31747628-01	WZ	-.98164793 00	PX	-.93055615 00	PY	.31395626 00	PZ	.18840675 00
QX	.31417629 00	QY	.94890612 00	QZ	-.29493407-01	RX	-.13334872 00	RY	.10340036 00	RZ	-.98566044 00
BX	-.59826203 00	BY	-.79635991 00	BZ	.88845082-01	TX	.61277567 00	TY	.79025692 00	TZ	.00000000 00
SXI	-.77892497 00	SYI	.60398873 00	SZI	.16874098 00	DAI	.97146257 01	RAI	.14220952 03		
SXO	.98215473 00	SYO	.98257697-02	SZO	-.18781924 00	DAO	-.10825546 02	RAO	.57318349 00		
ETE	.15511553 03	ETS	.35974606 02	ETC	.27562279 03	M1	.97419700 02	M2	.10763902 04		
B.T	-.10763902 04	B.R	-.97419700 02	B	.10807898 04	THA	.18517151 03				

2 DAYS 11 HRS. 16 MIN. 40.356 SEC. JULIAN DATE 2438045.74909315 JAN. 16,1963 05 58 41.648

TFL 3 DAYS 5 HRS. 58 MIN. 41.648 SEC.

SELENOCENTRIC EQUATORIAL COORDINATES

X	.31288407 05	Y	-.16061710 05	Z	-.13253005 05	DX	-.11380668 01	DY	.54647329 00	DZ	.46471783 00
R	.37584373 05	DEC	-.20647655 02	RA	.33282658 03	V	.13452850 01	PTH	-.88505718 02	AZ	.25318636 03
R	.37584369 05	LAT	-.95680243 01	LON	.32033636 03	VR	.13514222 01	PTR	-.84337338 02	AZR	.27146661 03
LTS	.91114721-01	LNS	.28869504 03	LTE	-.63780075 01	LNE	.10193460 01				
ALT	.35846373 05	SHA	-.20436907 05	ALP	.13846555 02	DR	-.13448276 01	DP	.53477664-04	ASD	.26504514 01
HGE	.28387756 03	SVL	-.64133700 01	HNG	.14761300 03	SIA	.13324062 03				

SELENOCENTRIC CONIC

EPOCH OF PERICENTER PASSAGE JULIAN DATE 2438046.03278612 JAN. 16,1963 12 47 12.722

SMA	-.31638115 04	ECC	.10545681 01	B	.10593463 04	SLR	.35470750 03	APO	.00000000 00	RCA	.17264334 03
VH	.12445902 01	C3	.15490047 01	C1	.13184597 04	TFP	-.24511074 05	TF	.66086508 02	LTF	.66048990 02
TA	-.15993536 03	MTA	.16148769 03	EA	-.18300096 03	MA	-.55245989 03	C3J	-.13141159 01	TFI	.59277876 02
ZAE	.14114727 03	ZAP	.14552885 03	ZAC	.88752808 02	DEF	.14297539 03	IR	.37440690 04	GP	.63259879 01
OP1	.13877558 02	OY	-.92349933 01	OP2	-.45891075 02						

CASE 1 SPACE TRAJECTORIES 24

EARTH-MOON EXTEND,VIEW PERIODS,FINE PRINT CHECK 1

ALL VECTORS REFERENCED TO EARTH EQUATOR PLANE

X	.31288407 05	Y	-.16061710 05	Z	-.13253005 05	DX	-.11380668 01	DY	.54647329 00	DZ	.46471783 00
INC	.15360597 03	LAN	.20223165 03	APF	.32424822 02	MX	-.52790029 00	MY	-.80501142 00	MZ	-.27067813 00
WX	-.16818868 00	WY	.41148359 00	WZ	-.89575812 00	PX	-.96306999 00	PY	.12522994 00	PZ	.23835402 00
QX	.21025157 00	QY	.90276746 00	QZ	.37522636 00	RX	-.31130036 00	RY	.14908433 00	RZ	-.93854457 00
BX	-.50515787 00	BY	-.81629729 00	BZ	-.28013264 00	TX	.43193068 00	TY	.90190681 00	TZ	.00000000 00
SXI	-.84647974 00	SYI	.40538619 00	SZI	.34515801 00	DAI	.20191441 02	RAI	.15440985 03		
SXO	.97999301 00	SYO	.16788625 00	SZO	-.10688299 00	DAO	-.61356656 01	RAO	.97211878 01		
ETE	.15542884 03	ETS	.35192309 03	ETC	.23881489 03						
B.T	-.10110583 04	B.R	.31618908 03	B	.10593463 04	THA	.16263393 03				

ALL VECTORS REFERENCED TO ORBIT PLANE OF TARGET

X	.25214639 05	Y	-.27560233 05	Z	-.41521744 04	DX	-.92812448 00	DY	.96249650 00	DZ	.14824702 00
INC	.17363676 03	LAN	.21764273 03	APF	.65152662 02	MX	-.45567261 00	MY	-.85123083 00	MZ	-.44144488-01
WX	-.67707737-01	WY	.87784751-01	WZ	-.99383924 00	PX	-.88351564 00	PY	.45747206 00	PZ	.10059969 00
QX	.46348653 00	QY	.88488215 00	QZ	.46584471-01	RX	-.76564420-01	RY	.79237952-01	RZ	-.99391106 00
BX	-.72002275 00	BY	-.69384264 00	BZ	-.12232997-01	TX	.71913470 00	TY	.69487070 00	TZ	.00000000 00
SXI	-.69063967 00	SYI	.71475593 00	SZI	.11018513 00	DAI	.63259888 01	RAI	.13401691 03		
SXO	.98495894 00	SYO	-.15284562 00	SZO	-.80603461-01	DAO	-.46232534 01	RAO	.35117921 03		
ETE	.17208969 03	ETS	.85839584 01	ETC	.25547575 03						
B.T	-.10592661 04	B.R	.13038398 02	B	.10593464 04	THA	.17929479 03				

ALL VECTORS REFERENCED TO TRUE LUNAR EQU. PLANE

X	.28530144 05	Y	-.23655611 05	Z	-.62472149 04	DX	-.10427009 01	DY	.81919615 00	DZ	.22690054 00
INC	.16893368 03	LAN	.26079626 03	APF	.99927538 02	MX	-.43022853 00	MY	-.88380738 00	MZ	.55405754-01
WX	-.18944581 00	WY	.30696136-01	WZ	-.98140568 00	PX	-.92669367 00	PY	.32480814 00	PZ	.18904372 00
QX	.32456887 00	QY	.94527788 00	QZ	-.33087055-01	RX	-.13280718 00	RY	.10411989 00	RZ	-.98565779 00
BX	-.60201052 00	BY	-.79323997 00	BZ	.91398448-01	TX	.61698364 00	TY	.78697598 00	TZ	.00000000 00
SXI	-.77568900 00	SYI	.60813473 00	SZI	.16875633 00	DAI	.97155170 01	RAI	.14190380 03		
SXO	.98179567 00	SYO	-.78674554-02	SZO	-.18976716 00	DAO	-.10939197 02	RAO	.35954088 03		
ETE	.15599398 03	ETS	.36125239 02	ETC	.27563392 03	M1	.98231463 02	M2	.10547825 04		
B.T	-.10547825 04	B.R	-.98231463 02	B	.10593467 04	THA	.18532058 03				

2 DAYS 11 HRS. 46 MIN. 40.356 SEC. JULIAN DATE 2438045.76992647 JAN. 16,1963 06 28 41.648

TFL 3 DAYS 6 HRS. 28 MIN. 41.648 SEC.

SELENOCENTRIC EQUATORIAL COORDINATES

X	.29235540 05	Y	-.15075210 05	Z	-.12414307 05	DX	-.11430282 01	DY	.54969898 00	DZ	.46722053 00
R	.35158125 05	DEC	-.20676995 02	RA	.33272225 03	V	.13516573 01	PTH	-.88438632 02	AZ	.25335208 03
R	.35158122 05	LAT	-.95578533 01	LON	.31995892 03	VR	.13572744 01	PTR	-.84557319 02	AZR	.27163651 03
LTS	.90686981-01	LNS	.28844190 03	LTE	-.63889017 01	LNE	.99348772 00				
ALT	.33420125 05	SHA	-.19055229 05	ALP	.13899793 02	DR	-.13511555 01	DP	.60018256-04	ASD	.28335022 01
HGE	.28388179 03	SVL	-.63896102 01	HNG	.14773301 03	SIA	.13294603 03				

SELENOCENTRIC CONIC

EPOCH OF PERICENTER PASSAGE JULIAN DATE 2438046.03278835 JAN. 16,1963 12 47 12.914

SMA	-.31654691 04	ECC	.10526520 01	B	.10406375 04	SLR	.34211190 03	APO	.00000000 00	RCA	.16666824 03
VH	.12442643 01	C3	.15481936 01	C1	.12948390 04	TFP	-.22711266 05	TF	.66086560 02	LTF	.66050299 02
TA	-.16017580 03	MTA	.16180174 03	EA	-.17954799 03	MA	-.51149162 03	C3J	-.13139537 01	TFI	.59777876 02
ZAE	.14087514 03	ZAP	.14557682 03	ZAC	.88749478 02	DEF	.14360345 03	IR	.37448383 04	GP	.63298820 01
OP1	.13881793 02	OY	-.91820420 01	OP2	-.45779534 02						

EARTH-MOON EXTEND,VIEW PERIODS,FINE PRINT CHECK 1

ALL VECTORS REFERENCED TO EARTH EQUATOR PLANE

X	.29235540 05	Y	-.15075210 05	Z	-.12414307 05	DX	-.11430282 01	DY	.54969898 00	DZ	.46722053 00
INC	.15368388 03	LAN	.20246247 03	APF	.32974077 02	MX	-.52899934 00	MY	-.80517148 00	MZ	-.26803364 00
WX	-.16937712 00	WY	.40967111 00	WZ	-.89636177 00	PX	-.96166727 00	PY	.13031034 00	PZ	.24127408 00
QX	.21564335 00	QY	.90287068 00	QZ	.37189770 00	RX	-.31140301 00	RY	.14931849 00	RZ	-.93847326 00
BX	-.50519579 00	BY	-.81702063 00	BZ	-.27794696 00	TX	.43236636 00	TY	.90169802 00	TZ	.00000000 00
SXI	-.84621949 00	SYI	.40576427 00	SZI	.34535178 00	DAI	.20203271 02	RAI	.15438217 03		
SXO	.98091289 00	SYO	.15817943 00	SZO	-.11306008 00	DAO	-.64917464 01	RAO	.91605087 01		
ETE	.15550731 03	ETS	.35195476 03	ETC	.23882506 03						
B.T	-.99394991 03	B.R	.30820457 03	B	.10406375 04	THA	.16277235 03				

ALL VECTORS REFERENCED TO ORBIT PLANE OF TARGET

X	.23651975 05	Y	-.25721341 05	Z	-.38846366 04	DX	-.93609247 00	DY	.96358479 00	DZ	.14903891 00
INC	.17364508 03	LAN	.21905071 03	APF	.66648461 02	MX	-.45650384 00	MY	-.85106066 00	MZ	-.41582472-01
WX	-.69742119-01	WY	.85968614-01	WZ	-.99385533 00	PX	-.88266712 00	PY	.45887884 00	PZ	.10163275 00
QX	.46479702 00	QY	.88433087 00	QZ	.43878383-01	RX	-.76913783-01	RY	.78993204-01	RZ	-.99390357 00
BX	-.71720775 00	BY	-.69678847 00	BZ	-.99434450-02	TX	.71647415 00	TY	.69761364 00	TZ	.00000000 00
SXI	-.69336069 00	SYI	.71210622 00	SZI	.11025269 00	DAI	.63298837 01	RAI	.13423586 03		
SXO	.98367589 00	SYO	-.15974748 00	SZO	-.82845973-01	DAO	-.47521715 01	RAO	.35077577 03		
ETE	.17216173 03	ETS	.86091951 01	ETC	.25547949 03						
B.T	-.10405857 04	B.R	.10410991 02	B	.10406378 04	THA	.17942678 03				

ALL VECTORS REFERENCED TO TRUE LUNAR EQU. PLANE

X	.26542834 05	Y	-.22304527 05	Z	-.58377732 04	DX	-.10431703 01	DY	.82873384 00	DZ	.22797590 00
INC	.16887316 03	LAN	.26110085 03	APF	.10083900 03	MX	-.43126707 00	MY	-.88325295 00	MZ	.56942241-01
WX	-.19071032 00	WY	.29861455-01	WZ	-.98120238 00	PX	-.92300009 00	PY	.33485701 00	PZ	.18958877 00
QX	.33422907 00	QY	.94180217 00	QZ	-.36299758-01	RX	-.13226427 00	RY	.10483029 00	RZ	-.98565549 00
BX	-.60575926 00	BY	-.79011237 00	BZ	.93691876-01	TX	.62114386 00	TY	.78369657 00	TZ	.00000000 00
SXI	-.77245484 00	SYI	.61223385 00	SZI	.16876974 00	DAI	.97162983 01	RAI	.14160028 03		
SXO	.98121463 00	SYO	-.23983326-01	SZO	-.19144261 00	DAO	-.11036985 02	RAO	.35859982 03		
ETE	.15684958 03	ETS	.36275600 02	ETC	.27564571 03	M1	.98918076 02	M2	.10359250 04		
B.T	-.10359250 04	B.R	-.98918076 02	B	.10406370 04	THA	.18545450 03				

2 DAYS 12 HRS. 16 MIN. 40.356 SEC. JULIAN DATE 2438045.79075981 JAN. 16,1963 06 58 41.648

TFL 3 DAYS 6 HRS. 58 MIN. 41.648 SEC.

SELENOCENTRIC EQUATORIAL COORDINATES

X	.27172989 05	Y	-.14082548 05	Z	-.11570806 05	DX	-.11488548 01	DY	.55333581 00	DZ	.47006702 00
R	.32719612 05	DEC	-.20709819 02	RA	.33260430 03	V	.13590478 01	PTH	-.88357695 02	AZ	.25350778 03
R	.32719608 05	LAT	-.95461011 01	LON	.31956824 03	VR	.13641794 01	PTR	-.84765047 02	AZR	.27183172 03
LTS	.90259241-01	LNS	.28818878 03	LTE	-.63996754 01	LNE	.96762649 00				
ALT	.30981613 05	SHA	-.17669201 05	ALP	.13958419 02	DR	-.13584895 01	DP	.68204700-04	ASD	.30448684 01
HGE	.28388754 03	SVL	-.63658037 01	HNG	.14786632 03	SIA	.13261146 03				

SELENOCENTRIC CONIC

EPOCH OF PERICENTER PASSAGE JULIAN DATE 2438046.03278944 JAN. 16,1963 12 47 13.008

SMA	-.31669903 04	ECC	.10510200 01	B	.10244710 04	SLR	.33140336 03	APO	.00000000 00	RCA	.16157978 03
VH	.12439654 01	C3	.15474499 01	C1	.12744128 04	TFP	-.20911360 05	TF	.66086587 02	LTF	.66051397 02
TA	-.16035945 03	MTA	.16207434 03	EA	-.17582989 03	MA	-.47061577 03	C3J	-.13137735 01	TFI	.60277876 02
ZAE	.14060519 03	ZAP	.14562271 03	ZAC	.88746370 02	DEF	.14414867 03	IR	.37455443 04	GP	.63334431 01
OP1	.13887541 02	OY	-.91273598 01	OP2	-.45656328 02						

CASE 1 SPACE TRAJECTORIES 26

EARTH-MOON EXTEND,VIEW PERIODS,FINE PRINT CHECK 1

ALL VECTORS REFERENCED TO EARTH EQUATOR PLANE

X	.27172989 05	Y	-.14082548 05	Z	-.11570806 05	DX	-.11488548 01	DY	.55333581 00	DZ	.47006702 00
INC	.15375298 03	LAN	.20266800 03	APF	.33457039 02	MX	-.53033260 00	MY	-.80512484 00	MZ	-.26554009 00
WX	-.17043178 00	WY	.40807004 00	WZ	-.89689580 00	PX	-.96041710 00	PY	.13474285 00	PZ	.24380775 00
QX	.22033817 00	QY	.90294810 00	QZ	.36895406 00	RX	-.31149711 00	RY	.14953473 00	RZ	-.93840761 00
BX	-.50524440 00	BY	-.81764854 00	BZ	-.27600538 00	TX	.43276898 00	TY	.90150486 00	TZ	.00000000 00
SXI	-.84597903 00	SYI	.40611371 00	SZI	.34553016 00	DAI	.20214161 02	RAI	.15435658 03		
SXO	.98161153 00	SYO	.14970974 00	SZO	-.11841487 00	DAO	-.68006297 01	RAO	.86716008 01		
ETE	.15558430 03	ETS	.35198482 03	ETC	.23883448 03						
B.T	-.97915679 03	B.R	.30131828 03	B	.10244710 04	THA	.16289517 03				

ALL VECTORS REFERENCED TO ORBIT PLANE OF TARGET

X	.22066377 05	Y	-.23886724 05	Z	-.36155815 04	DX	-.94479971 00	DY	.96534112 00	DZ	.14993615 00
INC	.17364008 03	LAN	.22032710 03	APF	.67969581 02	MX	-.45756846 00	MY	-.85067958 00	MZ	-.39216518-01
WX	-.71572263-01	WY	.84314210-01	WZ	-.99384567 00	PX	-.88217577 00	PY	.45962072 00	PZ	.10252280 00
QX	.46542791 00	QY	.88409327 00	QZ	.41485214-01	RX	-.77261268-01	RY	.78739946-01	RZ	-.99389674 00
BX	-.71436971 00	BY	-.69972371 00	BZ	-.79163279-02	TX	.71377712 00	TY	.70037292 00	TZ	.00000000 00
SXI	-.69609836 00	SYI	.70942076 00	SZI	.11031447 00	DAI	.63334439 01	RAI	.13445693 03		
SXO	.98260340 00	SYO	-.16519645 00	SZO	-.84777275-01	DAO	-.48632184 01	RAO	.35045661 03		
ETE	.17223278 03	ETS	.86333060 01	ETC	.25548295 03						
B.T	-.10244387 04	B.R	.81598265 01	B	.10244712 04	THA	.17954364 03				

ALL VECTORS REFERENCED TO TRUE LUNAR EQU. PLANE

X	.24560600 05	Y	-.20926191 05	Z	-.54262564 04	DX	-.10443604 01	DY	.83891681 00	DZ	.22921680 00
INC	.16881303 03	LAN	.26133248 03	APF	.10163403 03	MX	-.43256370 00	MY	-.88253517 00	MZ	.58275566-01
WX	-.19182114 00	WY	.29241408-01	WZ	-.98099932 00	PX	-.91947865 00	PY	.34415237 00	PZ	.19005003 00
QX	.34317289 00	QY	.93846173 00	QZ	-.39129353-01	RX	-.13172024 00	RY	.10553157 00	RZ	-.98565349 00
BX	-.60950839 00	BY	-.78697944 00	BZ	.95723007-01	TX	.62525622 00	TY	.78041954 00	TZ	.00000000 00
SXI	-.76922325 00	SYI	.61628598 00	SZI	.16878132 00	DAI	.97169702 01	RAI	.14129900 03		
SXO	.98046664 00	SYO	-.38606789-01	SZO	-.19286777 00	DAO	-.11120192 02	RAO	.35774508 03		
ETE	.15768314 03	ETS	.36425697 02	ETC	.27565816 03	M1	.99492855 02	M2	.10196286 04		
B.T	-.10196286 04	B.R	-.99492855 02	B	.10244712 04	THA	.18557313 03				

2 DAYS 12 HRS. 45 MIN. 39.854 SEC. JULIAN DATE 2438045.81089288 JAN. 16,1963 07 27 41.145
TFL 3 DAYS 7 HRS. 27 MIN. 41.145 SEC.

START OF VIEW PERIOD

JETGOLD-2 1 UNIFORM TIME TAU .00000000 00

R	.38152712 06	LAT	-.44252539 00	LONG	.32554400 03						
MIN	.36456642 04	HA	.27683137 03	DEC	-.99583816 00	ELE	.49999998 01	AZI	.94765733 02		
CKM	.34791886 03	CKC	.27722211 03	CKT	.34791886 03	PSS	.10282372 03	PSM	.30767542 01		
UT	.60761070 02	DHA	.41710510-02	DDE	.20218866-04	DEL	.34080528-02	DAZ	.24129280-02		
ET	.60751348 02	RGE	.38091895 06	DRG	.69273709 00	DDR	.25132112-04	SLS	.20371072 03		
RDI	.63720326 04	PHI	.35205980 02	THI	.24315175 03	SPS	.10296824 03	POL	.19360686 03		
DT	.12706087 01	RF1	.00000000 00	RF2	.00000000 00	BF1	.14777525 06				
ESS1	-.11381072 03	ESS2	-.13741072 03	F1	.10372773 06	F2	.10443681 06	PRA	.19325849 03		

2 DAYS 12 HRS. 46 MIN. 40.356 SEC. JULIAN DATE 2438045.81159314 JAN. 16,1963 07 28 41.648
TFL 3 DAYS 7 HRS. 28 MIN. 41.648 SEC.

EARTH-MOON EXTEND,VIEW PERIODS,FINE PRINT CHECK 1

SELENOCENTRIC EQUATORIAL COORDINATES

X	.25099024 05	Y	-.13082888 05	Z	-.10721806 05	DX	-.11557473 01	DY	.55749502 00	DZ	.47334618 00
R	.30266815 05	DEC	-.20747053 02	RA	.33246918 03	V	.13677021 01	PTH	-.88259943 02	AZ	.25365493 03
R	.30266812 05	LAT	-.95323758 01	LON	.31916082 03	VR	.13723823 01	PTR	-.84957701 02	AZR	.27205703 03
LTS	.89831500-01	LNS	.28793566 03	LTE	-.64103288 01	LNE	.94173324 00				
ALT	.28528815 05	SHA	-.16277684 05	ALP	.14023914 02	DR	-.13670715 01	DP	.78615074-04	ASD	.32918848 01
HGE	.28389498 03	SVL	-.63418929 01	HNG	.14801638 03	SIA	.13222634 03				

SELENOCENTRIC CONIC

EPOCH OF PERICENTER PASSAGE JULIAN DATE 2438046.03278957 JAN. 16,1963 12 47 13.019

SMA	-.31683785 04	ECC	.10496433 01	B	.10106561 04	SLR	.32238598 03	APO	.00000000 00	RCA	.15728882 03
VH	.12436929 01	C3	.15467719 01	C1	.12569550 04	TFP	-.19111371 05	TF	.66086590 02	LTF	.66052303 02
TA	-.16048548 03	MTA	.16230812 03	EA	-.17180731 03	MA	-.42982392 03	C3J	-.13135710 01	TFI	.60777876 02
ZAE	.14033741 03	ZAP	.14566653 03	ZAC	.88743483 02	DEF	.14461623 03	IR	.37461884 04	GP	.63366789 01
OP1	.13894985 02	OY	-.90703934 01	OP2	-.45518225 02						

ALL VECTORS REFERENCED TO EARTH EQUATOR PLANE

X	.25099024 05	Y	-.13082888 05	Z	-.10721806 05	DX	-.11557473 01	DY	.55749502 00	DZ	.47334618 00
INC	.15381215 03	LAN	.20284809 03	APF	.33876444 02	MX	-.53194349 00	MY	-.80483729 00	MZ	-.26317082 00
WX	-.17135186 00	WY	.40667396 00	WZ	-.89735202 00	PX	-.95931710 00	PY	.13856959 00	PZ	.24598309 00
QX	.22437672 00	QY	.90299676 00	QZ	.36638670 00	RX	-.31158285 00	RY	.14973321 00	RZ	-.93834753 00
BX	-.50530280 00	BY	-.81818399 00	BZ	-.27430651 00	TX	.43313880 00	TY	.90132724 00	TZ	.00000000 00
SXI	-.84575818 00	SYI	.40643472 00	SZI	.34569338 00	DAI	.20224127 02	RAI	.15433308 03		
SXO	.98213343 00	SYO	.14240295 00	SZO	-.12300506 00	DAO	-.70655659 01	RAO	.82500240 01		
ETE	.15565982 03	ETS	.35201329 03	ETC	.23884313 03						
B.T	-.96650843 03	B.R	.29544431 03	B	.10106561 04	THA	.16300254 03				

ALL VECTORS REFERENCED TO ORBIT PLANE OF TARGET

X	.20456387 05	Y	-.22055127 05	Z	-.33447953 04	DX	-.95441687 00	DY	.96793938 00	DZ	.15096608 00
INC	.17364959 03	LAN	.22147199 03	APF	.69119653 02	MX	-.45894014 00	MY	-.85010330 00	MZ	-.37040709-01
WX	-.73206153-01	WY	.82826017-01	WZ	-.99386404 00	PX	-.88202427 00	PY	.45974390 00	PZ	.10328210 00
QX	.46547384 00	QY	.88417631 00	QZ	.39398994-01	RX	-.77606860-01	RY	.78478310-01	RZ	-.99389049 00
BX	-.71150997 00	BY	-.70264911 00	BZ	-.61484354-02	TX	.71104360 00	TY	.70314793 00	TZ	.00000000 00
SXI	-.69885204 00	SYI	.70669947 00	SZI	.11037060 00	DAI	.63366806 01	RAI	.13468011 03		
SXO	.98176511 00	SYO	-.16930079 00	SZO	-.86424059-01	DAO	-.49579190 01	RAO	.35021583 03		
ETE	.17230283 03	ETS	.86563046 01	ETC	.25548613 03						
B.T	-.10106362 04	B.R	.62521285 01	B	.10106555 04	THA	.17964555 03				

ALL VECTORS REFERENCED TO TRUE LUNAR EQU. PLANE

X	.22582122 05	Y	-.19519329 05	Z	-.50123318 04	DX	-.10464412 01	DY	.84991992 00	DZ	.23066348 00
INC	.16875757 03	LAN	.26149407 03	APF	.13231919 03	MX	-.43417079 00	MY	-.88163719 00	MZ	.59420720-01
WX	-.19277990 00	WY	.28831474-01	WZ	-.98081108 00	PX	-.91613337 00	PY	.35274909 00	PZ	.19043670 00
QX	.35146711 00	QY	.93526909 00	QZ	-.41588750-01	RX	-.13117522 00	RY	.10622393 00	RZ	-.98565182 00
BX	-.61325979 00	BY	-.78384119 00	BZ	.97495814-01	TX	.62932160 00	TY	.77714499 00	TZ	.00000000 00
SXI	-.76599437 00	SYI	.62029198 00	SZI	.16879118 00	DAI	.97175439 01	RAI	.14099991 03		
SXO	.97961459 00	SYO	-.51839396-01	SZO	-.19406865 00	DAO	-.11190322 02	RAO	.35697084 03		
ETE	.15849538 03	ETS	.36575519 02	ETC	.27567124 03	M1	.99969181 02	M2	.10056997 04		
B.T	-.10056997 04	B.R	-.99969181 02	B	.10106561 04	THA	.18567670 03				

2 DAYS 13 HRS. 16 MIN. 40.356 SEC. JULIAN DATE 2438045.83242647 JAN. 16,1963 07 58 41.648

TFL 3 DAYS 7 HRS. 58 MIN. 41.648 SEC.

CASE 1 SPACE TRAJECTORIES 28

EARTH-MOON EXTEND,VIEW PERIODS,FINE PRINT CHECK 1

SELENOCENTRIC EQUATORIAL COORDINATES

X	.23011497 05	Y	-.12075161 05	Z	-.98664273 04	DX	-.11639802 01	DY	.56233001 00	DZ	.47718014 00
R	.27797210 05	DEC	-.20789955 02	RA	.33231200 03	V	.13779571 01	PTH	-.88141482 02	AZ	.25379565 03
R	.27797209 05	LAT	-.95161353 01	LON	.31873187 03	VR	.13822192 01	PTR	-.85131429 02	AZR	.27231809 03
LTS	.89405467-01	LNS	.28768251 03	LTE	-.64208601 01	LNE	.91579773 00				
ALT	.26059210 05	SHA	-.14879277 05	ALP	.14098318 02	DR	-.13772322 01	DP	.92111982-04	ASD	.35847137 01
HGE	.28390436 03	SVL	-.63178019 01	HNG	.14818794 03	SIA	.13177605 03				

SELENOCENTRIC CONIC

EPOCH OF PERICENTER PASSAGE JULIAN DATE 2438046.03278890 JAN. 16,1963 12 47 12.962

SMA	-.31696371 04	ECC	.10484930 01	B	.99900798 03	SLR	.31486388 03	APO	.00000000 00	RCA	.15370513 03
VH	.12434459 01	C3	.15461577 01	C1	.12422045 04	TFP	-.17311314 05	TF	.66086574 02	LTF	.66053044 02
TA	-.16055243 03	MTA	.16250626 03	EA	-.16742981 03	MA	-.38910787 03	C3J	-.13133403 01	TFI	.61277876 02
ZAE	.14007177 03	ZAP	.14570829 03	ZAC	.88740823 02	DEF	.14501254 03	IR	.37467723 04	GP	.63395988 01
OP1	.13904366 02	OY	-.90104020 01	OP2	-.45360770 02						

ALL VECTORS REFERENCED TO EARTH EQUATOR PLANE

X	.23011497 05	Y	-.12075161 05	Z	-.98664273 04	DX	-.11639802 01	DY	.56233001 00	DZ	.47718014 00
INC	.15386426 03	LAN	.20300313 03	APF	.34235272 02	MX	-.53391001 00	MY	.80429275 00	MZ	-.26089523 00
WX	-.17214475 00	WY	.40548580 00	WZ	-.89775304 00	PX	-.95836606 00	PY	.14183319 00	PZ	.24782879 00
QX	.22782566 00	QY	.90303668 00	QZ	.36418650 00	RX	-.31166042 00	RY	.14991410 00	RZ	-.93829286 00
BX	-.50537167 00	BY	-.81863056 00	BZ	-.27284336 00	TX	.43347611 00	TY	.90116507 00	TZ	.00000000 00
SXI	-.84555674 00	SYI	.40672754 00	SZI	.34584166 00	DAI	.20233182 02	RAI	.15431163 03		
SXO	.98252620 00	SYO	.13618077 00	SZO	-.12689168 00	DAO	-.72900119 01	RAO	.78910754 01		
ETE	.15573392 03	ETS	.35204017 03	ETC	.23885102 03						
B.T	-.95583865 03	B.R	.29049859 03	B	.99900798 03	THA	.16309491 03				

ALL VECTORS REFERENCED TO ORBIT PLANE OF TARGET

X	.18820189 05	Y	-.20224938 05	Z	-.30720090 04	DX	-.96517752 00	DY	.97161897 00	DZ	.15216618 00
INC	.17365009 03	LAN	.22248822 03	APF	.70103669 02	MX	-.46066375 00	MY	-.84925167 00	MZ	-.35039179-01
WX	-.74647728-01	WY	.81497296-01	WZ	-.99386500 00	PX	-.88218640 00	PY	.45928849 00	PZ	.10392155 00
QX	.46493623 00	QY	.88453536 00	QZ	.37611534-01	RX	-.77950607-01	RY	.78208429-01	RZ	-.99388487 00
BX	-.70862903 00	BY	-.70556604 00	BZ	-.46325754-02	TX	.70827326 00	TY	.70593837 00	TZ	.00000000 00
SXI	-.70162147 00	SYI	.70394209 00	SZI	.11042127 00	DAI	.63396014 01	RAI	.13490540 03		
SXO	.98114644 00	SYO	-.17214933 00	SZO	-.87808782-01	DAO	-.50375607 01	RAO	.35004833 03		
ETE	.17237193 03	ETS	.86781949 01	ETC	.25548904 03						
B.T	-.99899705 03	B.R	.46564744 01	B	.99900791 03	THA	.17973294 03				

ALL VECTORS REFERENCED TO TRUE LUNAR EQU. PLANE

X	.20605740 05	Y	-.18082282 05	Z	-.45955833 04	DX	-.10496453 01	DY	.86198261 00	DZ	.23237093 00
INC	.16871331 03	LAN	.26158927 03	APF	.10290178 03	MX	-.43616062 00	MY	-.88053885 00	MZ	.60400792-01
WX	-.19359241 00	WY	.28624213-01	WZ	-.98066017 00	PX	-.91296576 00	PY	.36069991 00	PZ	.19075721 00
QX	.35918247 00	QY	.93223997 00	QZ	-.43695502-01	RX	-.13062934 00	RY	.10690755 00	RZ	-.98565040 00
BX	-.61701382 00	BY	-.78069809 00	BZ	.99017375-01	TX	.63334068 00	TY	.77387311 00	TZ	.00000000 00
SXI	-.76276834 00	SYI	.62425250 00	SZI	.16879943 00	DAI	.97180238 01	RAI	.14070297 03		
SXO	.97871192 00	SYO	-.63781816-01	SZO	-.19506955 00	DAO	-.11248787 02	RAO	.35627135 03		
ETE	.15928707 03	ETS	.36725068 02	ETC	.27568496 03	M1	.10035927 03	M2	.99395419 03		
B.T	-.99395419 03	B.R	-.10035927 03	B	.99900797 03	THA	.18576559 03				

2 DAYS 13 HRS. 46 MIN. 40.356 SEC. JULIAN DATE 2438045.85325981 JAN. 16,1963 08 28 41.648

TFL 3 DAYS 8 HRS. 28 MIN. 41.648 SEC.

EARTH-MOON EXTEND,VIEW PERIODS,FINE PRINT CHECK 1

SELENOCENTRIC EQUATORIAL COORDINATES

X	.20907663 05	Y	-.11057965 05	Z	-.90035227 04	DX	-.11739403 01	DY	.56805904 00	DZ	.48174179 00
R	.25307556 05	DEC	-.20840287 02	RA	.33212585 03	V	.13902884 01	PTH	-.87996660 02	AZ	.25393314 03
R	.25307553 05	LAT	-.94966120 01	LON	.31827473 03	VR	.13941647 01	PTR	-.85280862 02	AZR	.27262145 03
LTS	.88980287-01	LNS	.28742939 03	LTE	-.64312719 01	LNE	.88984515 00				
ALT	.23569556 05	SHA	-.13472210 05	ALP	.14184539 02	DR	-.13894387 01	DP	.11003181-03	ASD	.39378951 01
HGE	.28391599 03	SVL	-.62934224 01	HNG	.14838771 03	SIA	.13123976 03				

SELENOCENTRIC CONIC

EPOCH OF PERICENTER PASSAGE JULIAN DATE 2438046.03278767 JAN. 16,1963 12 47 12.855

SMA	-.31707689 04	ECC	.10475481 01	B	.98934239 03	SLR	.30869667 03	APO	.00000000 00	RCA	.15076406 03
VH	.12432240 01	C3	.15456058 01	C1	.12299788 04	TFP	-.15511207 05	TF	.66086545 02	LTF	.66053635 02
TA	-.16055577 03	MTA	.16267098 03	EA	-.16263095 03	MA	-.34846007 03	C3J	-.13130730 01	TFI	.61777876 02
ZAE	.13980826 03	ZAP	.14574801 03	ZAC	.88738395 02	DEF	.14534196 03	IR	.37472972 04	GP	.63422114 01
OP1	.13915996 02	OY	-.89463422 01	OP2	-.45177661 02						

ALL VECTORS REFERENCED TO EARTH EQUATOR PLANE

X	.20907663 05	Y	-.11057965 05	Z	-.90035227 04	DX	-.11739403 01	DY	.56805904 00	DZ	.48174179 00
INC	.15390518 03	LAN	.20313395 03	APF	.34537500 02	MX	-.53630424 00	MY	-.80341147 00	MZ	-.25865123 00
WX	-.17280913 00	WY	.40448078 00	WZ	-.89806737 00	PX	-.95755471 00	PY	.14457558 00	PZ	.24937136 00
QX	.23070251 00	QY	.90304335 00	QZ	.36232927 00	RX	-.31173000 00	RY	.15007745 00	RZ	-.93824366 00
BX	-.50544839 00	BY	-.81899428 00	BZ	-.27160687 00	TX	.43378097 00	TY	.90101836 00	TZ	.00000000 00
SXI	-.84537476 00	SYI	.40699224 00	SZI	.34597519 00	DAI	.20241334 02	RAI	.15429225 03		
SXO	.98280805 00	SYO	.13096561 00	SZO	-.13012965 00	DAO	-.74770848 01	RAO	.75903217 01		
ETE	.15580658 03	ETS	.35206548 03	ETC	.23885816 03						
B.T	-.94698150 03	B.R	.28639906 03	B	.98934239 03	THA	.16317292 03				

ALL VECTORS REFERENCED TO ORBIT PLANE OF TARGET

X	.17155430 05	Y	-.18394050 05	Z	-.27968705 04	DX	-.97740894 00	DY	.97672104 00	DZ	.15358921 00
INC	.17365545 03	LAN	.22338083 03	APF	.70929918 02	MX	-.46284378 00	MY	-.84808879 00	MZ	-.33192046-01
WX	-.75908499-01	WY	.80324765-01	WZ	-.99387535 00	PX	-.88263895 00	PY	.45829983 00	PZ	.10445235 00
QX	.46388381 00	QY	.88516097 00	QZ	.36108786-01	RX	-.78292415-01	RY	.77930477-01	RZ	-.99387984 00
BX	-.70572754 00	BY	-.70847538 00	BZ	-.33579779-02	TX	.70546667 00	TY	.70874311 00	TZ	.00000000 00
SXI	-.70440549 00	SYI	.70114909 00	SZI	.11046656 00	DAI	.63422122 01	RAI	.13513274 03		
SXO	.98074741 00	SYO	-.17384661 00	SZO	-.88956065-01	DAO	-.51035532 01	RAO	.34994819 03		
ETE	.17244008 03	ETS	.86989856 01	ETC	.25549166 03						
B.T	-.98933648 03	B.R	.33427064 01	B	.98934213 03	THA	.17980641 03				

ALL VECTORS REFERENCED TO TRUE LUNAR EQU. PLANE

X	.18629304 05	Y	-.16612847 05	Z	-.41754747 04	DX	-.10543004 01	DY	.87544335 00	DZ	.23441655 00
INC	.16867502 03	LAN	.26162237 03	APF	.10338811 03	MX	-.43861333 00	MY	-.87916786 00	MZ	.61245816-01
WX	-.19425914 00	WY	.28608115-01	WZ	-.98052917 00	PX	-.90997026 00	PY	.36805556 00	PZ	.19101872 00
QX	.36635200 00	QY	.92936168 00	QZ	-.45465217-01	RX	-.13008285 00	RY	.10758248 00	RZ	-.98564923 00
BX	-.62076764 00	BY	-.77755243 00	BZ	.10029841 00	TX	.63731352 00	TY	.77060463 00	TZ	.00000000 00
SXI	-.75954586 00	SYI	.62816758 00	SZI	.16880621 00	DAI	.97184174 01	RAI	.14040821 03		
SXO	.97778776 00	SYO	-.74531543-01	SZO	-.19589059 00	DAO	-.11296754 02	RAO	.35564108 03		
ETE	.16005880 03	ETS	.36874312 02	ETC	.27569931 03	M1	.10067438 03	M2	.98420719 03		
B.T	-.98420719 03	B.R	-.10067438 03	B	.98934276 03	THA	.18584046 03				

2 DAYS 14 HRS. 11 MIN. 25.728 SEC. JULIAN DATE 2438045.87045161 JAN. 16,1963 08 53 27.019

TFL 3 DAYS 8 HRS. 53 MIN. 27.019 SEC.

END OF VIEW PERIOD

EARTH-MOON EXTEND,VIEW PERIODS,FINE PRINT CHECK 1

JOBJET 1 UNIFORM TIME TAU .00000000 00

R	.38705531 06		LAT	-.33854942 00		LONG	.30411768 03				
MIN	.37314288 04	HA	.84413257 02	DEC	.71354130-01	ELE	.49999998 01	AZI	.27249651 03		
CKM	.34816161 03	CKC	.27766621 03	CKT	.34816161 03	PSS	.10471999 03	PSM	.22952673 01		
UT	.62190479 02	DHA	.41693961-02	DDE	.19764288-04	DEL	-.37608994-02	DAZ	-.18068375-02		
ET	.62180757 02	RGE	.38644754 06	DRG	.14976892 01	DDR	.25132112-04	SLS	.20383588 03		
RDI	.63754947 04	PHI	-.25734820 02	THI	.27684780 02	SPS	.10486542 03	POL	.40759380 01		
DT	.12890500 01	RF1	.00000000 00	RF2	.00000000 00	BF1	.14519722 06				
ESS1	-.11443588 03	ESS2	-.13803588 03	F1	.10622218 06	F2	.10959234 06	PRA	.19170947 03		

2 DAYS 14 HRS. 16 MIN. 40.356 SEC. JULIAN DATE 2438045.87409314 JAN. 16,1963 08 58 41.648

TFL 3 DAYS 8 HRS. 58 MIN. 41.648 SEC.

SELENOCENTRIC EQUATORIAL COORDINATES

X	.18783942 05	Y	-.10029422 05	Z	-.81315703 04	DX	-.11861914 01	DY	.57500418 00	DZ	.48728480 00		
R	.22793600 05	DEC	-.20900610 02	RA	.33190064 03	V	.14053919 01	PTH	-.87817366 02	AZ	.25407185 03		
R	.22793598 05	LAT	-.94726688 01	LON	.31777956 03	VR	.14089140 01	PTR	-.85398182 02	AZR	.27297443 03		
LTS	.88555962-01	LNS	.28717625 03	LTE	-.64415616 01	LNE	.86385329 00						
ALT	.21055600 05	SHA	-.12054195 05	ALP	.14286880 02	DR	-.14043723 01	DP	.13454192-03	ASD	.43730166 01		
HGE	.28393028 03	SVL	-.62685981 01	HNG	.14862547 03	SIA	.13058661 03						

SELENOCENTRIC CONIC

EPOCH OF PERICENTER PASSAGE JULIAN DATE 2438046.03278598 JAN. 16,1963 12 47 12.710

SMA	-.31717771 04	ECC	.10467826 01	B	.98147779 03	SLR	.30370969 03	APO	.00000000 00	RCA	.14838395 03		
VH	.12430264 01	C3	.15451146 01	C1	.12200033 04	TFP	-.13711062 05	TF	.66086504 02	LTF	.66054097 02		
TA	-.16048934 03	MTA	.16280578 03	EA	-.15732189 03	MA	-.30787286 03	C3J	-.13127576 01	TFI	.62277876 02		
ZAE	.13954686 03	ZAP	.14578570 03	ZAC	.88736198 02	DEF	.14561158 03	IR	.37477648 04	GP	.63445216 01		
OP1	.13930289 02	OY	-.88766995 01	OP2	-.44959631 02								

ALL VECTORS REFERENCED TO EARTH EQUATOR PLANE

X	.18783942 05	Y	-.10029422 05	Z	-.81315703 04	DX	-.11861914 01	DY	.57500418 00	DZ	.48728480 00		
INC	.15393983 03	LAN	.20324176 03	APF	.34786705 02	MX	-.53928184 00	MY	-.80215127 00	MZ	-.25637423 00		
WX	-.17335849 00	WY	.40366272 00	WZ	-.89833321 00	PX	-.95687939 00	PY	.14684048 00	PZ	.25063881 00		
QX	.23308524 00	QY	.90304685 00	QZ	.36080056 00	RX	-.31179172 00	RY	.15022342 00	RZ	-.93819980 00		
BX	-.50553302 00	BY	-.81928056 00	BZ	-.27058408 00	TX	.43405363 00	TY	.90088703 00	TZ	.00000000 00		
SXI	-.84521203 00	SYI	.40722903 00	SZI	.34609414 00	DAI	.20248599 02	RAI	.15427491 03				
SXO	.98301743 00	SYO	.12667321 00	SZO	-.13278048 00	DAO	-.76302971 01	RAO	.73427632 01				
ETE	.15587785 03	ETS	.35208922 03	ETC	.23886455 03								
B.T	-.93977251 03	B.R	.28306586 03	B	.98147779 03	THA	.16323734 03						

ALL VECTORS REFERENCED TO ORBIT PLANE OF TARGET

X	.15459079 05	Y	-.16559593 05	Z	-.25189145 04	DX	-.99158962 00	DY	.98374512 00	DZ	.15531230 00		
INC	.17365653 03	LAN	.22415697 03	APF	.71608043 02	MX	-.46560616 00	MY	-.84651214 00	MZ	-.31468916-01		
WX	-.76999082-01	WY	.79298913-01	WZ	-.99387743 00	PX	-.88335539 00	PY	.45681857 00	PZ	.10488492 00		
QX	.46234089 00	QY	.88602107 00	QZ	.34874203-01	RX	-.78632376-01	RY	.77644489-01	RZ	-.99387537 00		
BX	-.70280375 00	BY	-.71138003 00	BZ	-.23105716-02	TX	.70262285 00	TY	.71156246 00	TZ	.00000000 00		
SXI	-.70720440 00	SYI	.69831955 00	SZI	.11050664 00	DAI	.63445234 01	RAI	.13536218 03				
SXO	.98054972 00	SYO	-.17448592 00	SZO	-.89888302-01	DAO	-.51571821 01	RAO	.34991000 03				
ETE	.17250730 03	ETS	.87186816 01	ETC	.25549401 03								
B.T	-.98147486 03	B.R	.22817478 01	B	.98147751 03	THA	.17986680 03						

EARTH-MOON EXTEND,VIEW PERIODS,FINE PRINT CHECK 1

ALL VECTORS REFERENCED TO TRUE LUNAR EQU. PLANE

X	.16649965 05	Y	-.15108094 05	Z	-.37513040 04	DX	-.10608829 01	DY	.89080063 00	DZ	.23691307 00
INC	.16864408 03	LAN	.26159803 03	APF	.10378600 03	MX	-.44166012 00	MY	-.87744512 00	MZ	.61998995-01
WX	-.19478712 00	WY	.28770419-01	WZ	-.98042297 00	PX	-.90714116 00	PY	.37486862 00	PZ	.19122820 00
QX	.37303125 00	QY	.92663123 00	QZ	-.46920651-01	RX	-.12953583 00	RY	.10824888 00	RZ	-.98564833 00
BX	-.62452150 00	BY	-.77440330 00	BZ	.10135299 00	TX	.64124086 00	TY	.76733968 00	TZ	.00000000 00
SXI	-.75632706 00	SYI	.63203797 00	SZI	.16881158 00	DAI	.97187307 01	RAI	.14011559 03		
SXO	.97687175 00	SYO	-.84192186-01	SZO	-.19655216 00	DAO	-.11335411 02	RAO	.35507411 03		
ETE	.16081136 03	ETS	.37023263 02	ETC	.27571426 03	M1	.10092417 03	M2	.97627498 03		
B.T	-.97627498 03	B.R	-.10092417 03	B	.98147772 03	THA	.18590208 03				

2 DAYS 14 HRS. 46 MIN. 40.356 SEC. JULIAN DATE 2438045.89492647 JAN. 16,1963 09 28 41.648

TFL 3 DAYS 9 HRS. 28 MIN. 41.647 SEC.

SELENOCENTRIC EQUATORIAL COORDINATES

X	.16635494 05	Y	-.89869279 04	Z	-.72484796 04	DX	-.12015921 01	DY	.58366318 00	DZ	.49419856 00
R	.20249568 05	DEC	-.20974796 02	RA	.33162092 03	V	.14243309 01	PTH	-.87591458 02	AZ	.25421839 03
R	.20249566 05	LAT	-.94425546 01	LON	.31723137 03	VR	.14275288 01	PTR	-.85471553 02	AZR	.27338493 03
LTS	.88131636-01	LNS	.28692311 03	LTE	-.64517300 01	LNE	.83783197 00				
ALT	.18511568 05	SHA	-.10622165 05	ALP	.14412013 02	DR	-.14230726 01	DP	.16936330-03	ASD	.49236972 01
HGE	.28394782 03	SVL	-.62430865 01	HNG	.14891619 03	SIA	.12976876 03				

SELENOCENTRIC CONIC

EPOCH OF PERICENTER PASSAGE JULIAN DATE 2438046.03278409 JAN. 16,1963 12 47 12.546

SMA	-.31726641 04	ECC	.10461771 01	B	.97523330 03	SLR	.29977397 03	APO	.00000000 00	RCA	.14650441 03
VH	.12428526 01	C3	.15446825 01	C1	.12120726 04	TFP	-.11910898 05	TF	.66086459 02	LTF	.66054448 02
TA	-.16034084 03	MTA	.16291327 03	EA	-.15137887 03	MA	-.26733921 03	C3J	-.13123759 01	TFI	.62777876 02
ZAE	.13928758 03	ZAP	.14582136 03	ZAC	.88734242 02	DEF	.14582652 03	IR	.37481761 04	GP	.63465366 01
OP1	.13947821 02	OY	-.87992245 01	OP2	-.44692461 02						

ALL VECTORS REFERENCED TO EARTH EQUATOR PLANE

X	.16635494 05	Y	-.89869279 04	Z	-.72484796 04	DX	-.12015921 01	DY	.58366318 00	DZ	.49419856 00
INC	.15396683 03	LAN	.20332809 03	APF	.34987348 02	MX	-.54304031 00	MY	-.80038416 00	MZ	-.25394971 00
WX	-.17379827 00	WY	.40301083 00	WZ	-.89854018 00	PX	-.95632907 00	PY	.14867046 00	PZ	.25165726 00
QX	.23500624 00	QY	.90303819 00	QZ	.35957274 00	RX	-.31184573 00	RY	.15035205 00	RZ	-.93816122 00
BX	-.50562133 00	BY	-.81949771 00	BZ	-.26976022 00	TX	.43429417 00	TY	.90077110 00	TZ	.00000000 00
SXI	-.84506851 00	SYI	.40743795 00	SZI	.34619864 00	DAI	.20254981 02	RAI	.15425961 03		
SXO	.98316704 00	SYO	.12322132 00	SZO	-.13490014 00	DAO	-.77528469 01	RAO	.71436905 01		
ETE	.15594773 03	ETS	.35211140 03	ETC	.23887019 03						
B.T	-.93404750 03	B.R	.28041982 03	B	.97523330 03	THA	.16328919 03				

ALL VECTORS REFERENCED TO ORBIT PLANE OF TARGET

X	.13726989 05	Y	-.14717621 05	Z	-.22375027 04	DX	-.10084437 01	DY	.99346268 00	DZ	.15745316 00
INC	.17365651 03	LAN	.22482543 03	APF	.72149874 02	MX	-.46915854 00	MY	-.84439049 00	MZ	-.29828034-01
WX	-.77933682-01	WY	.78410003-01	WZ	-.99387739 00	PX	-.88430997 00	PY	.45488892 00	PZ	.10522964 00
QX	.46035806 00	QY	.88709367 00	QZ	.33887112-01	RX	-.78970407-01	RY	.77350616-01	RZ	-.99387146 00
BX	-.69985864 00	BY	-.71427987 00	BZ	-.14731646-02	TX	.69974221 00	TY	.71439543 00	TZ	.00000000 00
SXI	-.71001724 00	SYI	.69545382 00	SZI	.11054159 00	DAI	.63465383 01	RAI	.13559367 03		
SXO	.98053896 00	SYO	-.17416806 00	SZO	-.90628394-01	DAO	-.51997598 01	RAO	.34992789 03		
ETE	.17257361 03	ETS	.87372888 01	ETC	.25549608 03						
B.T	-.97523231 03	B.R	.14455581 01	B	.97523338 03	THA	.17991507 03				

CASE 1 SPACE TRAJECTORIES 32

EARTH-MOON EXTEND,VIEW PERIODS,FINE PRINT CHECK 1

ALL VECTORS REFERENCED TO TRUE LUNAR EQU. PLANE

X	.14663827 05	Y	-.13563946 05	Z	-.33221162 04	DX	-.10701168 01	DY	.90881944 00	DZ	.24003194 00
INC	.16861824 03	LAN	.26152152 03	APF	.10410325 03	MX	-.44549536 00	MY	-.87523475 00	MZ	.62721549-01
WX	-.19518344 00	WY	.29095332-01	WZ	-.98033408 00	PX	-.90446862 00	PY	.38118936 00	PZ	.19139203 00
QX	.37926103 00	QY	.92403843 00	QZ	-.48085926-01	RX	-.12898845 00	RY	.10890686 00	RZ	-.98564761 00
BX	-.62827141 00	BY	-.77125260 00	BZ	.10219815 00	TX	.64512302 00	TY	.76407873 00	TZ	.00000000 00
SXI	-.75311237 00	SYI	.63586396 00	SZI	.16881565 00	DAI	.97189663 01	RAI	.13982509 03		
SXO	.97598042 00	SYO	-.92864233-01	SZO	-.19707275 00	DAO	-.11365834 02	RAO	.35456469 03		
ETE	.16154536 03	ETS	.37171894 02	ETC	.27572981 03	M1	.10111835 03	M2	.96997695 03		
B.T	-.96997695 03	B.R	-.10111835 03	B	.97523341 03	THA	.18595148 03				

2 DAYS 15 HRS. 16 MIN. 40.356 SEC. JULIAN DATE 2438045.91575980 JAN. 16,1963 09 58 41.648

TFL 3 DAYS 9 HRS. 58 MIN. 41.647 SEC.

SELENOCENTRIC EQUATORIAL COORDINATES

X	.14455512 05	Y	-.79267283 04	Z	-.63512623 04	DX	-.12215228 01	DY	.59485167 00	DZ	.50311601 00
R	.17667297 05	DEC	-.21069036 02	RA	.33126169 03	V	.14488244 01	PTH	-.87299576 02	AZ	.25438309 03
R	.17667296 05	LAT	-.94034065 01	LON	.31660596 03	VR	.14517262 01	PTR	-.85482114 02	AZR	.27386075 03
LTS	.87708165-01	LNS	.28666997 03	LTE	-.64617781 01	LNE	.81178804 00				
ALT	.15929297 05	SHA	-.91718497 04	ALP	.14570920 02	DR	-.14472155 01	DP	.22136795-03	ASD	.56455380 01
HGE	.28396941 03	SVL	-.62164864 01	HNG	.14928408 03	SIA	.12870751 03				

SELENOCENTRIC CONIC

EPOCH OF PERICENTER PASSAGE JULIAN DATE 2438046.03278212 JAN. 16,1963 12 47 12.376

SMA	-.31734315 04	ECC	.10457115 01	B	.97043197 03	SLR	.29675566 03	APO	.00000000 00	RCA	.14506232 03
VH	.12427023 01	C3	.15443090 01	C1	.12059552 04	TFP	-.10110728 05	TF	.66086411 02	LTF	.66054704 02
TA	-.16008922 03	MTA	.16299646 03	EA	-.14462288 03	MA	-.22685222 03	C3J	-.13118991 01	TFI	.63277876 02
ZAE	.13903040 03	ZAP	.14585500 03	ZAC	.88732524 02	DEF	.14599294 03	IR	.37485320 04	GP	.63482621 01
OP1	.13969414 02	OY	-.87102966 01	OP2	-.44353052 02						

ALL VECTORS REFERENCED TO EARTH EQUATOR PLANE

X	.14455512 05	Y	-.79267283 04	Z	-.63512623 04	DX	-.12215228 01	DY	.59485167 00	DZ	.50311601 00
INC	.15398791 03	LAN	.20339487 03	APF	.35143977 02	MX	-.54791769 00	MY	-.79792622 00	MZ	-.25120779 00
WX	-.17413997 00	WY	.40251240 00	WZ	-.89870155 00	PX	-.95589512 00	PY	.15010830 00	PZ	.25245316 00
QX	.23651949 00	QY	.90302575 00	QZ	.35861906 00	RX	-.31189215 00	RY	.15046339 00	RZ	-.93812794 00
BX	-.50571221 00	BY	-.81965314 00	BZ	-.26911689 00	TX	.43450260 00	TY	.90067058 00	TZ	.00000000 00
SXI	-.84494424 00	SYI	.40761903 00	SZI	.34628882 00	DAI	.20260489 02	RAI	.15424635 03		
SXO	.98327536 00	SYO	.12052588 00	SZO	-.13654638 00	DAO	-.78480503 01	RAO	.69882230 01		
ETE	.15601624 03	ETS	.35213202 03	ETC	.23887508 03						
B.T	-.92964543 03	B.R	.27838389 03	B	.97043197 03	THA	.16332958 03				

ALL VECTORS REFERENCED TO ORBIT PLANE OF TARGET

X	.11953348 05	Y	-.12862411 05	Z	-.19517262 04	DX	-.10291337 01	DY	.10071302 01	DZ	.16020200 00
INC	.17365558 03	LAN	.22539637 03	APF	.72568379 02	MX	-.47383201 00	MY	-.84149834 00	MZ	-.28207914-01
WX	-.78727724-01	WY	.77645874-01	WZ	-.99387559 00	PX	-.88547608 00	PY	.45255303 00	PZ	.10549649 00
QX	.45797623 00	QY	.88835489 00	QZ	.33124538-01	RX	-.79306517-01	RY	.77048936-01	RZ	-.99386818 00
BX	-.69689047 00	BY	-.71717709 00	BZ	-.82630583-03	TX	.69682440 00	TY	.71724178 00	TZ	.00000000 00
SXI	-.71284378 00	SYI	.69255159 00	SZI	.11057152 00	DAI	.63482629 01	RAI	.13582722 03		
SXO	.98069505 00	SYO	-.17298972 00	SZO	-.91198359-01	DAO	-.52325523 01	RAO	.34999621 03		
ETE	.17263903 03	ETS	.87548104 01	ETC	.25549787 03						
B.T	-.97043145 03	B.R	.80687900 00	B	.97043177 03	THA	.17995236 03				

EARTH-MOON EXTEND,VIEW PERIODS,FINE PRINT CHECK 1

ALL VECTORS REFERENCED TO TRUE LUNAR EQU. PLANE

X	.12665364 05	Y	-.11974542 05	Z	-.28865640 04	DX	-.10831641 01	DY	.93074574 00	DZ	.24404882 00
INC	.16859852 03	LAN	.26139839 03	APF	.10434837 03	MX	-.45044152 00	MY	-.87232704 00	MZ	.63504934-01
WX	-.19545918 00	WY	.29565971-01	WZ	-.98026611 00	PX	-.90194243 00	PY	.38706777 00	PZ	.19151634 00
QX	.38509182 00	QY	.92157697 00	QZ	-.48989157-01	RX	-.12844089 00	RY	.10955649 00	RZ	-.98564715 00
BX	-.63201450 00	BY	-.76810086 00	BZ	.10285308 00	TX	.64896021 00	TY	.76082236 00	TZ	.00000000 00
SXI	-.74990238 00	SYI	.63964578 00	SZI	.16881851 00	DAI	.97191328 01	RAI	.13953674 03		
SXO	.97512832 00	SYO	-.10064956 00	SZO	-.19747045 00	DAO	-.11389076 02	RAO	.35410698 03		
ETE	.16226143 03	ETS	.37320188 02	ETC	.27574595 03	M1	.10126537 03	M2	.96513433 03		
B.T	-.96513433 03	B.R	-.10126537 03	B	.97043235 03	THA	.18598976 03				

2 DAYS 15 HRS. 46 MIN. 40.356 SEC. JULIAN DATE 2438045.93659314 JAN. 16,1963 10 28 41.648

TFL 3 DAYS 10 HRS. 28 MIN. 41.647 SEC.

SELENOCENTRIC EQUATORIAL COORDINATES

X	.12233902 05	Y	-.68431025 04	Z	-.54354128 04	DX	-.12483705 01	DY	.61001432 00	DZ	.51514679 00
R	.15034630 05	DEC	-.21193954 02	RA	.33077928 03	V	.14818646 01	PTH	-.86908732 02	AZ	.25458334 03
R	.15034628 05	LAT	-.93501694 01	LON	.31586118 03	VR	.14844950 01	PTR	-.85397544 02	AZR	.27440876 03
LTS	.87286401-01	LNS	.28641682 03	LTE	-.64717040 01	LNE	.78572105 00				
ALT	.13296630 05	SHA	-.76969851 04	ALP	.14783213 02	DR	-.14797083 01	DP	.30453677-03	ASD	.66382223 01
HGE	.28399631 03	SVL	-.61880753 01	HNG	.14977127 03	SIA	.12726277 03				

SELENOCENTRIC CONIC

EPOCH OF PERICENTER PASSAGE JULIAN DATE 2438046.03278026 JAN. 16,1963 12 47 12.215

SMA	-.31740806 04	ECC	.10453681 01	B	.96689619 03	SLR	.29453724 03	APO	.00000000 00	RCA	.14400207 03
VH	.12425752 01	C3	.15439932 01	C1	.12014391 04	TFP	-.83105671 04	TF	.66086366 02	LTF	.66054884 02
TA	-.15969530 03	MTA	.16305811 03	EA	-.13677954 03	MA	-.18640521 03	C3J	-.13112780 01	TFI	.63777876 02
ZAE	.13877533 03	ZAP	.14588661 03	ZAC	.88731056 02	DEF	.14611626 03	IR	.37488329 04	GP	.63497032 01
OP1	.13996309 02	OY	-.86037245 01	OP2	-.43900993 02						

ALL VECTORS REFERENCED TO EARTH EQUATOR PLANE

X	.12233902 05	Y	-.68431025 04	Z	-.54354128 04	DX	-.12483705 01	DY	.61001432 00	DZ	.51514679 00
INC	.15400282 03	LAN	.20344424 03	APF	.35261435 02	MX	-.55448770 00	MY	-.79442728 00	MZ	-.24785618 00
WX	-.17439306 00	WY	.40214609 00	WZ	-.89881565 00	PX	-.95556524 00	PY	.15119652 00	PZ	.25305193 00
QX	.23766286 00	QY	.90300681 00	QZ	.35790858 00	RX	-.31193110 00	RY	.15055747 00	RZ	-.93809991 00
BX	-.50580063 00	BY	-.81975652 00	BZ	-.26863540 00	TX	.43467892 00	TY	.90058550 00	TZ	.00000000 00
SXI	-.84483918 00	SYI	.40777225 00	SZI	.34636478 00	DAI	.20265128 02	RAI	.15423513 03		
SXO	.98334982 00	SYO	.11850283 00	SZO	-.13777458 00	DAO	-.79190928 01	RAO	.68715403 01		
ETE	.15608340 03	ETS	.35215108 03	ETC	.23887922 03						
B.T	-.92640423 03	B.R	.27688166 03	B	.96689619 03	THA	.16335976 03				

ALL VECTORS REFERENCED TO ORBIT PLANE OF TARGET

X	.10129557 05	Y	-.10985255 05	Z	-.16602217 04	DX	-.10556608 01	DY	.10269582 01	DZ	.16388966 00
INC	.17364918 03	LAN	.22588130 03	APF	.72877648 02	MX	-.48019733 00	MY	-.83742549 00	MZ	-.26511033-01
WX	-.79397386-01	WY	.76991631-01	WZ	-.99386325 00	PX	-.88682641 00	PY	.44985236 00	PZ	.10569521 00
QX	.45522849 00	QY	.88977675 00	QZ	.32561222-01	RX	-.79640699-01	RY	.76739482-01	RZ	-.99386539 00
BX	-.69389687 00	BY	-.72007430 00	BZ	-.34821993-03	TX	.69386891 00	TY	.72010135 00	TZ	.00000000 00
SXI	-.71568380 00	SYI	.68961228 00	SZI	.11059651 00	DAI	.63497040 01	RAI	.13606284 03		
SXO	.98099337 00	SYO	-.17104570 00	SZO	-.91619661-01	DAO	-.52567918 01	RAO	.35010935 03		
ETE	.17270357 03	ETS	.87712511 01	ETC	.25549938 03						
B.T	-.96689626 03	B.R	.33878797 00	B	.96689631 03	THA	.17997992 03				

EARTH-MOON EXTEND,VIEW PERIODS,FINE PRINT CHECK 1

ALL VECTORS REFERENCED TO TRUE LUNAR EQU. PLANE

X	.10646317 05	Y	-.10330996 05	Z	-.24426439 04	DX	-.11020267 01	DY	.95876941 00	DZ	.24944015 00
INC	.16858369 03	LAN	.26123453 03	APF	.10452998 03	MX	-.45705567 00	MY	-.86833925 00	MZ	.64495628-01
WX	-.19562584 00	WY	.30163699-01	WZ	-.98021489 00	PX	-.89954913 00	PY	.39255355 00	PZ	.19160690 00
QX	.39056654 00	QY	.91923445 00	QZ	-.49659931-01	RX	-.12789338 00	RY	.11019790 00	RZ	-.98564684 00
BX	-.63574635 00	BY	-.76494938 00	BZ	.10333930 00	TX	.65275266 00	TY	.75757109 00	TZ	.00000000 00
SXI	-.74669757 00	SYI	.64338361 00	SZI	.16882031 00	DAI	.97192369 01	RAI	.13925053 03		
SXO	.97432117 00	SYO	-.10765042 00	SZO	-.19776229 00	DAO	-.11406134 02	RAO	.35369510 03		
ETE	.16296022 03	ETS	.37468148 02	ETC	.27576268 03	M1	.10137337 03	M2	.96156716 03		
B.T	-.96156716 03	B.R	-.10137337 03	B	.96689606 03	THA	.18601818 03				

2 DAYS 16 HRS. 16 MIN. 40.356 SEC. JULIAN DATE 2438045.95742647 JAN. 16,1963 10 58 41.648

TFL 3 DAYS 10 HRS. 58 MIN. 41.647 SEC.

SELENOCENTRIC EQUATORIAL COORDINATES

X	.99545851 04	Y	-.57266448 04	Z	-.44936159 04	DX	-.12867000 01	DY	.63200368 00	DZ	.53245281 00
R	.12332105 05	DEC	-.21369648 02	RA	.33008917 03	V	.15292257 01	PTH	-.86356882 02	AZ	.25485198 03
R	.12332104 05	LAT	-.92729003 01	LON	.31491563 03	VR	.15316040 01	PTR	-.85156806 02	AZR	.27503456 03
LTS	.86863782-01	LNS	.28616367 03	LTE	-.64815079 01	LNE	.75961137 00				
ALT	.10594105 05	SHA	-.61877294 04	ALP	.15088047 02	DR	-.15261355 01	DP	.45145313-03	ASD	.81018371 01
HGE	.28403053 03	SVL	-.61563687 01	HNG	.15045916 03	SIA	.12515601 03				

SELENOCENTRIC CONIC

EPOCH OF PERICENTER PASSAGE JULIAN DATE 2438046.03277866 JAN. 16,1963 12 47 12.077

SMA	-.31746125 04	ECC	.10451290 01	B	.96444631 03	SLR	.29299951 03	APO	.00000000 00	RCA	.14326701 03
VH	.12424711 01	C3	.15437345 01	C1	.11982988 04	TFP	-.65104289 04	TF	.66086327 02	LTF	.66054999 02
TA	-.15908107 03	MTA	.16310120 03	EA	-.12739417 03	MA	-.14599159 03	C3J	-.13104198 01	TFI	.64277875 02
ZAE	.13852237 03	ZAP	.14591620 03	ZAC	.88729843 02	DEF	.14620238 03	IR	.37490794 04	GP	.63508660 01
OP1	.14030539 02	OY	-.84678619 01	OP2	-.43257845 02						

ALL VECTORS REFERENCED TO EARTH EQUATOR PLANE

X	.99545851 04	Y	-.57266448 04	Z	-.44936159 04	DX	-.12867000 01	DY	.63200368 00	DZ	.53245281 00
INC	.15401259 03	LAN	.20347853 03	APF	.35344726 02	MX	-.56386007 00	MY	-.78920254 00	MZ	-.24334756 00
WX	-.17456938 00	WY	.40189365 00	WZ	-.89889038 00	PX	-.95532726 00	PY	.15197848 00	PZ	.25347929 00
QX	.23848261 00	QY	.90298489 00	QZ	.35740968 00	RX	-.31196263 00	RY	.15063423 00	RZ	-.93807705 00
BX	-.50588213 00	BY	-.81981765 00	BZ	-.26829519 00	TX	.43482299 00	TY	.90051595 00	TZ	.00000000 00
SXI	-.84475335 00	SYI	.40789747 00	SZI	.34642655 00	DAI	.20268900 02	RAI	.15422597 03		
SXO	.98339856 00	SYO	.11706545 00	SZO	-.13864142 00	DAO	-.79692392 01	RAO	.67886411 01		
ETE	.15614922 03	ETS	.35216858 03	ETC	.23888260 03						
B.T	-.92415951 03	B.R	.27583674 03	B	.96444631 03	THA	.16338105 03				

ALL VECTORS REFERENCED TO ORBIT PLANE OF TARGET

X	.82419585 04	Y	-.90718882 04	Z	-.13607939 04	DX	-.10918289 01	DY	.10572737 01	DZ	.16915438 00
INC	.17364758 03	LAN	.22629214 03	APF	.73092841 02	MX	-.48936889 00	MY	-.83138945 00	MZ	-.24566444-01
WX	-.79961523-01	WY	.76433844-01	WZ	-.99386016 00	PX	-.88833516 00	PY	.44683189 00	PZ	.10583553 00
QX	.45217636 00	QY	.89134522 00	QZ	.32169731-01	RX	-.79972945-01	RY	.76422375-01	RZ	-.99386313 00
BX	-.69087666 00	BY	-.72297265 00	BZ	-.16110034-04	TX	.69087565 00	TY	.72297361 00	TZ	.00000000 00
SXI	-.71853682 00	SYI	.68663583 00	SZI	.11061669 00	DAI	.63508669 01	RAI	.13630053 03		
SXO	.98141618 00	SYO	-.16843921 00	SZO	-.91914341-01	DAO	-.52737477 01	RAO	.35026127 03		
ETE	.17276723 03	ETS	.87866037 01	ETC	.25550062 03						
B.T	-.96444626 03	B.R	.15590685-01	B	.96444626 03	THA	.17999907 03				

CASE 1 SPACE TRAJECTORIES 35

EARTH-MOON EXTEND,VIEW PERIODS,FINE PRINT CHECK 1

ALL VECTORS REFERENCED TO TRUE LUNAR EQU. PLANE

X	.85934781 04	Y	-.86188238 04	Z	-.19871586 04	DX	-.11305170 01	DY	.99717274 00	DZ	.25711658 00
INC	.16857312 03	LAN	.26103589 03	APF	.10465684 03	MX	-.46641259 00	MY	-.86251719 00	MZ	.65957075-01
WX	-.19569618 00	WY	.30869484-01	WZ	-.98017836 00	PX	-.89727399 00	PY	.39769616 00	PZ	.19166898 00
QX	.39572969 00	QY	.91699763 00	QZ	-.50129173-01	RX	-.12734599 00	RY	.11083117 00	RZ	-.98564669 00
BX	-.63946324 00	BY	-.76179878 00	BZ	.10367926 00	TX	.65650087 00	TY	.75432528 00	TZ	.00000000 00
SXI	-.74349821 00	SYI	.64707790 00	SZI	.16882105 00	DAI	.97192805 01	RAI	.13896644 03		
SXO	.97356089 00	SYO	-.11396922 00	SZO	-.19796431 00	DAO	-.11417943 02	RAO	.35332309 03		
ETE	.16364227 03	ETS	.37615723 02	ETC	.27577998 03	M1	.10144924 03	M2	.95909587 03		
B.T	-.95909587 03	B.R	-.10144924 03	B	.96444640 03	THA	.18603806 03				

2 DAYS 16 HRS. 46 MIN. 40.356 SEC. JULIAN DATE 2438045.97825980 JAN. 16,1963 11 28 41.648

TFL 3 DAYS 11 HRS. 28 MIN. 41.647 SEC.

SELENOCENTRIC EQUATORIAL COORDINATES

X	.75890977 04	Y	-.45600190 04	Z	-.35126046 04	DX	-.13466600 01	DY	.66745652 00	DZ	.55997230 00
R	.95250496 04	DEC	-.21640117 02	RA	.32899984 03	V	.16039203 01	PTH	-.85508835 02	AZ	.25526272 03
R	.95250484 04	LAT	-.91485968 01	LON	.31358589 03	VR	.16060536 01	PTR	-.84626321 02	AZR	.27574671 03
LTS	.86442018-01	LNS	.28591052 03	LTE	-.64911906 01	LNE	.73349443 00				
ALT	.77870495 04	SHA	-.46269756 04	ALP	.15578394 02	DR	-.15989953 01	DP	.75548976-03	ASD	.10513445 02
HGE	.28407580 03	SVL	-.61177184 01	HNG	.15153136 03	SIA	.12173225 03				

SELENOCENTRIC CONIC

EPOCH OF PERICENTER PASSAGE JULIAN DATE 2438046.03277741 JAN. 16,1963 12 47 11.969

SMA	-.31750233 04	ECC	.10449760 01	B	.96290208 03	SLR	.29202252 03	APO	.00000000 00	RCA	.14279997 03
VH	.12423907 01	C3	.15435348 01	C1	.11962993 04	TFP	-.47103208 04	TF	.66086297 02	LTF	.66055067 02
TA	-.15806694 03	MTA	.16312883 03	EA	-.11561886 03	MA	-.10560499 03	C3J	-.13091185 01	TFI	.64777876 02
ZAE	.13827154 03	ZAP	.14594374 03	ZAC	.88728896 02	DEF	.14625765 03	IR	.37492699 04	GP	.63517556 01
OP1	.14075805 02	OY	-.82772496 01	OP2	-.42245692 02						

ALL VECTORS REFERENCED TO EARTH EQUATOR PLANE

X	.75890977 04	Y	-.45600190 04	Z	-.35126046 04	DX	-.13466600 01	DY	.66745652 00	DZ	.55997230 00
INC	.15401919 03	LAN	.20350027 03	APF	.35399028 02	MX	-.57850997 00	MY	-.78065140 00	MZ	-.23645800 00
WX	-.17468325 00	WY	.40173855 00	WZ	-.89894088 00	PX	-.95517004 00	PY	.15249762 00	PZ	.25376129 00
QX	.23903266 00	QY	.90296895 00	QZ	.35708962 00	RX	-.31198683 00	RY	.15069350 00	RZ	-.93805949 00
BX	-.50595401 00	BY	-.81984588 00	BZ	-.26807327 00	TX	.43493436 00	TY	.90046216 00	TZ	.00000000 00
SXI	-.84468708 00	SYI	.40799431 00	SZI	.34647412 00	DAI	.20271806 02	RAI	.15421888 03		
SXO	.98343150 00	SYO	.11612614 00	SZO	-.13920456 00	DAO	-.80018217 01	RAO	.67344490 01		
ETE	.15621369 03	ETS	.35218450 03	ETC	.23888521 03						
B.T	-.92274614 03	B.R	.27517259 03	B	.96290208 03	THA	.16339486 03				

ALL VECTORS REFERENCED TO ORBIT PLANE OF TARGET

X	.62665402 04	Y	-.70961667 04	Z	-.10495030 04	DX	-.11460260 01	DY	.11080171 01	DZ	.17743317 00
INC	.17364863 03	LAN	.22664177 03	APF	.73229652 02	MX	-.50381175 00	MY	-.82152478 00	MZ	-.22008729-01
WX	-.80438095-01	WY	.75955470-01	WZ	-.99386218 00	PX	-.88997572 00	PY	.44353442 00	PZ	.10592698 00
QX	.44885806 00	QY	.89303348 00	QZ	.31921423-01	RX	-.80303279-01	RY	.76097620-01	RZ	-.99386141 00
BX	-.68782809 00	BY	-.72587360 00	BZ	.19470127-03	TX	.68784387 00	TY	.72585867 00	TZ	.00000000 00
SXI	-.72140294 00	SYI	.68362149 00	SZI	.11063211 00	DAI	.63517565 01	RAI	.13654032 03		
SXO	.98193886 00	SYO	-.16526764 00	SZO	-.92103589-01	DAO	-.52846377 01	RAO	.35044623 03		
ETE	.17283005 03	ETS	.88008681 01	ETC	.25550157 03						
B.T	-.96290228 03	B.R	-.18864154 00	B	.96290229 03	THA	.18001122 03				

CASE 1 SPACE TRAJECTORIES 36

EARTH-MOON EXTEND,VIEW PERIODS,FINE PRINT CHECK 1

ALL VECTORS REFERENCED TO TRUE LUNAR EQU. PLANE

X	.64834250 04	Y	-.68116240 04	Z	-.15144399 04	DX	-.11770563 01	DY	.10557852 01	DZ	.26910196 00
INC	.16856685 03	LAN	.26080882 03	APF	.10473824 03	MX	-.48091645 00	MY	-.85310525 00	MZ	.68454681-01
WX	-.19568532 00	WY	.31663121-01	WZ	-.98015667 00	PX	-.89510121 00	PY	.40254454 00	PZ	.19170810 00
QX	.40062740 00	QY	.91485334 00	QZ	-.50430488-01	RX	-.12679908 00	RY	.11145633 00	RZ	-.98564672 00
BX	-.64316033 00	BY	-.75865019 00	BZ	.10389746 00	TX	.66020431 00	TY	.75108606 00	TZ	.00000000 00
SXI	-.74030552 00	SYI	.65072822 00	SZI	.16882097 00	DAI	.97192753 01	RAI	.13868454 03		
SXO	.97284618 00	SYO	-.11970964 00	SZO	-.19809291 00	DAO	-.11425459 02	RAO	.35298496 03		
ETE	.16430818 03	ETS	.37762905 02	ETC	.27579786 03	M1	.10149993 03	M2	.95753770 03		
B.T	-.95753770 03	B.R	-.10149993 03	B	.96290222 03	THA	.18605081 03				

2 DAYS 17 HRS. 16 MIN. 40.356 SEC. JULIAN DATE 2438045.99909314 JAN. 16,1963 11 58 41.648

TFL 3 DAYS 11 HRS. 58 MIN. 41.647 SEC.

SELENOCENTRIC EQUATORIAL COORDINATES

X	.50774714 04	Y	-.33044567 04	Z	-.24634122 04	DX	-.14573919 01	DY	.73686811 00	DZ	.61252762 00
R	.65397668 04	DEC	-.22128307 02	RA	.32694362 03	V	.17441777 01	PTH	-.83985265 02	AZ	.25603541 03
R	.65397663 04	LAT	-.89068312 01	LON	.31133222 03	VR	.17460438 01	PTR	-.83429600 02	AZR	.27658719 03
LTS	.86021962-01	LNS	.28565737 03	LTE	-.65007511 01	LNE	.70735146 00				
ALT	.48017668 04	SHA	-.29797573 04	ALP	.16553976 02	DR	-.17345760 01	DP	.16012031-02	ASD	.15412039 02
HGE	.28414025 03	SVL	-.60597873 01	HNG	.15352880 03	SIA	.11492546 03				

SELENOCENTRIC CONIC

EPOCH OF PERICENTER PASSAGE JULIAN DATE 2438046.03277658 JAN. 16,1963 12 47 11.897

SMA	-.31753018 04	ECC	.10448929 01	B	.96207543 03	SLR	.29149648 03	APO	.00000000 00	RCA	.14254853 03
VH	.12423363 01	C3	.15433994 01	C1	.11952213 04	TFP	-.29102489 04	TF	.66086277 02	LTF	.66055100 02
TA	-.15611755 03	MTA	.16314386 03	EA	-.99521912 02	MA	-.65238944 02	C3J	-.13067923 01	TFI	.65277875 02
ZAE	.13802287 03	ZAP	.14596919 03	ZAC	.88728235 02	DEF	.14628774 03	IR	.37493990 04	GP	.63523883 01
OP1	.14140258 02	OY	-.79606924 01	OP2	-.40337503 02						

ALL VECTORS REFERENCED TO EARTH EQUATOR PLANE

X	.50774714 04	Y	-.33044567 04	Z	-.24634122 04	DX	-.14573919 01	DY	.73686811 00	DZ	.61252762 00
INC	.15402230 03	LAN	.20351229 03	APF	.35429980 02	MX	-.60553069 00	MY	-.76377961 00	MZ	-.22354689 00
WX	-.17474676 00	WY	.40165418 00	WZ	-.89896464 00	PX	-.95507871 00	PY	.15279798 00	PZ	.25392418 00
QX	.23934975 00	QY	.90295435 00	QZ	.35691035 00	RX	-.31200395 00	RY	.15073523 00	RZ	-.93804714 00
BX	-.50601003 00	BY	-.81985299 00	BZ	-.26794574 00	TX	.43501268 00	TY	.90042434 00	TZ	.00000000 00
SXI	-.84464046 00	SYI	.40806239 00	SZI	.34650768 00	DAI	.20273856 02	RAI	.15421389 03		
SXO	.98344873 00	SYO	.11559609 00	SZO	-.13952143 00	DAO	-.80201548 01	RAO	.67038745 01		
ETE	.15627681 03	ETS	.35219886 03	ETC	.23888705 03						
B.T	-.92199188 03	B.R	.27480928 03	B	.96207543 03	THA	.16340276 03				

ALL VECTORS REFERENCED TO ORBIT PLANE OF TARGET

X	.41532785 04	Y	-.50003450 04	Z	-.71789694 03	DX	-.12419939 01	DY	.12092892 01	DZ	.19294157 00
INC	.17364723 03	LAN	.22694446 03	APF	.73305103 02	MX	-.53063733 00	MY	-.80208532 00	MZ	-.17796356-01
WX	-.80846336-01	WY	.75537053-01	WZ	-.99385948 00	PX	-.89171965 00	PY	.44000480 00	PZ	.10597970 00
QX	.44530801 00	QY	.89481239 00	QZ	.31785139-01	RX	-.80631851-01	RY	.75765431-01	RZ	-.99386019 00
BX	-.68474787 00	BY	-.72877997 00	BZ	.31138614-03	TX	.68477320 00	TY	.72875624 00	TZ	.00000000 00
SXI	-.72428183 00	SYI	.68056883 00	SZI	.11064310 00	DAI	.63523901 01	RAI	.13678222 03		
SXO	.98253348 00	SYO	-.16163189 00	SZO	-.92209650-01	DAO	-.52907395 01	RAO	.35065821 03		
ETE	.17289200 03	ETS	.88140516 01	ETC	.25550224 03						
B.T	-.96207549 03	B.R	-.30143218 00	B	.96207554 03	THA	.18001795 03				

EARTH-MOON EXTEND,VIEW PERIODS,FINE PRINT CHECK 1

ALL VECTORS REFERENCED TO TRUE LUNAR EQU. PLANE

X	.42669378 04	Y	-.48514482 04	Z	-.10125400 04	DX	-.12655497 01	DY	.11643624 01	DZ	.29120365 00
INC	.16856301 03	LAN	.26056009 03	APF	.10478367 03	MX	-.50750409 00	MY	-.83466520 00	MZ	.73587959-01
WX	-.19560907 00	WY	.32522799-01	WZ	-.98014339 00	PX	-.89301171 00	PY	.40714846 00	PZ	.19172991 00
QX	.40529985 00	QY	.91278324 00	QZ	-.50598782-01	RX	-.12625295 00	RY	.11207362 00	RZ	-.98564682 00
BX	-.64683191 00	BY	-.75550527 00	BZ	.10402054 00	TX	.66386330 00	TY	.74785395 00	TZ	.00000000 00
SXI	-.73711986 00	SYI	.65433475 00	SZI	.16882033 00	DAI	.97192378 01	RAI	.13840482 03		
SXO	.97216881 00	SYO	-.12497669 00	SZO	-.19816451 00	DAO	-.11429645 02	RAO	.35267454 03		
ETE	.16495843 03	ETS	.37909651 02	ETC	.27581630 03	M1	.10153291 03	M2	.95670279 03		
B.T	-.95670279 03	B.R	-.10153291 03	B	.96207545 03	THA	.18605800 03				

2 DAYS 17 HRS. 43 MIN. 40.356 SEC. JULIAN DATE 2438046.01784313 JAN. 16,1963 12 25 41.648

TFL 3 DAYS 12 HRS. 25 MIN. 41.647 SEC.

RECTIFICATION .84833321-02 .78452569 02 .37212911 02 .12605179 02

2 DAYS 17 HRS. 46 MIN. 40.356 SEC. JULIAN DATE 2438046.01992647 JAN. 16,1963 12 28 41.648

TFL 3 DAYS 12 HRS. 28 MIN. 41.647 SEC.

SELENOCENTRIC EQUATORIAL COORDINATES

X	.22371461 04	Y	-.18269172 04	Z	-.12511179 04	DX	-.17685535 01	DY	.96413442 00	DZ	.77457182 00
R	.31476571 04	DEC	-.23420481 02	RA	.32076394 03	V	.21580774 01	PTH	-.79869610 02	AZ	.25843323 03
R	.31476568 04	LAT	-.81292918 01	LON	.30520296 03	VR	.21595330 01	PTR	-.79655671 02	AZR	.27790393 03
LTS	.85601051-01	LNS	.28540421 03	LTE	-.65101904 01	LNE	.68117348 00				
ALT	.14096571 04	SHA	-.11471763 04	ALP	.20134495 02	DR	-.21244331 01	DP	.69093966-02	ASD	.33515098 02
HGE	.28425101 03	SVL	-.58934935 01	HNG	.15941744 03	SIA	.91107996 02				

SELENOCENTRIC CONIC

EPOCH OF PERICENTER PASSAGE JULIAN DATE 2438046.03277609 JAN. 16,1963 12 47 11.855

SMA	-.31753232 04	ECC	.10448610 01	B	.96173301 03	SLR	.29128712 03	APO	.00000000 00	RCA	.14244837 03
VH	.12423321 01	C3	.15433890 01	C1	.11947920 04	TFP	-.11102075 04	TF	.66086266 02	LTF	.66055109 02
TA	-.15028449 03	MTA	.16314963 03	EA	-.72236972 02	MA	-.24887229 02	C3J	-.13005212 01	TFI	.65777875 02
ZAE	.13777609 03	ZAP	.14599277 03	ZAC	.88727992 02	DEF	.14629926 03	IR	.37494089 04	GP	.63529603 01
OP1	.14251019 02	OY	-.71678544 01	OP2	-.34623095 02						

ALL VECTORS REFERENCED TO EARTH EQUATOR PLANE

X	.22371461 04	Y	-.18269172 04	Z	-.12511179 04	DX	-.17685535 01	DY	.96413442 00	DZ	.77457182 00
INC	.15402398 03	LAN	.20351936 03	APF	.35445248 02	MX	-.68140112 00	MY	-.70840681 00	MZ	-.18399008 00
WX	-.17478582 00	WY	.40160850 00	WZ	-.89897753 00	PX	-.95503667 00	PY	.15292767 00	PZ	.25400404 00
QX	.23948871 00	QY	.90295282 00	QZ	.35682126 00	RX	-.31201719 00	RY	.15076211 00	RZ	-.93803839 00
BX	-.50604579 00	BY	-.81985495 00	BZ	-.26787220 00	TX	.43506059 00	TY	.90040118 00	TZ	.00000000 00
SXI	-.84461087 00	SYI	.40810354 00	SZI	.34653131 00	DAI	.20275300 02	RAI	.15421085 03		
SXO	.98345358 00	SYO	.11538009 00	SZO	-.13966547 00	DAO	-.80284902 01	RAO	.66914282 01		
ETE	.15633847 03	ETS	.35221203 03	ETC	.23888818 03						
B.T	-.92168543 03	B.R	.27463856 03	B	.96173301 03	THA	.16340729 03				

ALL VECTORS REFERENCED TO ORBIT PLANE OF TARGET

X	.17537008 04	Y	-.25917485 04	Z	-.33928968 03	DX	-.14973158 01	DY	.15357302 01	DZ	.23848690 00
INC	.17364724 03	LAN	.22722273 03	APF	.73345171 02	MX	-.60671192 00	MY	-.73865239 00	MZ	-.62715843-02
WX	-.81219760-01	WY	.75150464-01	WZ	-.99385951 00	PX	-.89353698 00	PY	.43629492 00	PZ	.10601159 00
QX	.44158291 00	QY	.89666025 00	QZ	.31713914-01	RX	-.80960727-01	RY	.75428429-01	RZ	-.99385906 00
BX	-.68163557 00	BY	-.73169174 00	BZ	.37762392-03	TX	.68166635 00	TY	.73166316 00	TZ	.00000000 00
SXI	-.72717007 00	SYI	.67748029 00	SZI	.11065300 00	DAI	.63529603 01	RAI	.13702600 03		
SXO	.98317605 00	SYO	-.15764499 00	SZO	-.92266986-01	DAO	-.52940394 01	RAO	.35089058 03		
ETE	.17295294 03	ETS	.88265184 01	ETC	.25550266 03						

EARTH-MOON EXTEND,VIEW PERIODS,FINE PRINT CHECK 1

B.T	-.96173317 03	B.R	-.36541313 00	B	.96173325 03	THA	.18002177 03				

ALL VECTORS REFERENCED TO TRUE LUNAR EQU. PLANE

X	.17963105 04	Y	-.25461532 04	Z	-.44510176 03	DX	-.15151144 01	DY	.14956526 01	DZ	.35319813 00
INC	.16856060 03	LAN	.26029992 03	APF	.10480669 03	MX	-.58215820 00	MY	-.77432067 00	MZ	.89717174-01
WX	-.19549767 00	WY	.33417198-01	WZ	-.98013505 00	PX	-.89098148 00	PY	.41156415 00	PZ	.19174718 00
QX	.40979628 00	QY	.91076814 00	QZ	-.50685780-01	RX	-.12570940 00	RY	.11268562 00	RZ	-.98564651 00
BX	-.65047294 00	BY	-.75236282 00	BZ	.10409188 00	TX	.66748146 00	TY	.74462643 00	TZ	.00000000 00
SXI	-.73393843 00	SYI	.65790077 00	SZI	.16882210 00	DAI	.97193420 01	RAI	.13812702 03		
SXO	.97151616 00	SYO	-.12988663 00	SZO	-.19820698 00	DAO	-.11432127 02	RAO	.35238501 03		
ETE	.16559347 03	ETS	.38056203 02	ETC	.27583527 03	M1	.10156645 03	M2	.95635518 03		
B.T	-.95635518 03	B.R	-.10156645 03	B	.96173333 03	THA	.18606218 03				

2 DAYS 17 HRS. 56 MIN. 49.201 SEC. JULIAN DATE 2438046.02697328 JAN. 16,1963 12 38 50.492

TFL 3 DAYS 12 HRS. 38 MIN. 50.492 SEC.

SELENOCENTRIC EQUATORIAL COORDINATES

X	.10708460 04	Y	-.11603268 04	Z	-.72655854 03	DX	-.21238971 01	DY	.12984141 01	DZ	.99302868 00
R	.17380900 04	DEC	-.24709724 02	RA	.31270339 03	V	.26800977 01	PTH	-.75139385 02	AZ	.26172805 03
R	.17380898 04	LAT	-.70145196 01	LON	.29765775 03	VR	.26812609 01	PTR	-.75045983 02	AZR	.27900252 03
LTS	.85459326-01	LNS	.28531858 03	LTE	-.65133545 01	LNE	.67231344 00				
ALT	.89965820-01	SHA	-.42664605 03	ALP	.27906372 02	DR	-.25904555 01	DP	.22658684-01	ASD	.89417003 02
HGE	.28432165 03	SVL	-.56166062 01	HNG	.16692642 03	SIA	.27835763 02				

SELENOCENTRIC CONIC

EPOCH OF PERICENTER PASSAGE JULIAN DATE 2438046.03277586 JAN. 16,1963 12 47 11.835

SMA	-.31747304 04	ECC	.10448620 01	B	.96156407 03	SLR	.29123917 03	APD	.00000000 00	RCA	.14242485 03
VH	.12424481 01	C3	.15436772 01	C1	.11946937 04	TFP	-.50134323 03	TF	.66086260 02	LTF	.66055112 02
TA	-.14281573 03	MTA	.16314946 03	EA	-.54159602 02	MA	-.11241627 02	C3J	-.12935974 01	TFI	.65946999 02
ZAE	.13769142 03	ZAP	.14600174 03	ZAC	.88728334 02	DEF	.14629892 03	IR	.37491341 04	GP	.63538816 01
OP1	.14321653 02	OY	-.81638040 01	OP2	-.42036861 02						

ALL VECTORS REFERENCED TO EARTH EQUATOR PLANE

X	.10708460 04	Y	-.11603268 04	Z	-.72655854 03	DX	-.21238971 01	DY	.12984141 01	DZ	.99302868 00
INC	.15402512 03	LAN	.20352616 03	APF	.35453380 02	MX	-.76801715 00	MY	-.62695105 00	MZ	-.13069832 00
WX	-.17482634 00	WY	.40157139 00	WZ	-.89898621 00	PX	-.95502289 00	PY	.15294708 00	PZ	.25404431 00
QX	.23951424 00	QY	.90296599 00	QZ	.35677065 00	RX	-.31203427 00	RY	.15078352 00	RZ	-.93802928 00
BX	-.50606884 00	BY	-.81986070 00	BZ	-.26781103 00	TX	.43509137 00	TY	.90038631 00	TZ	.00000000 00
SXI	-.84458873 00	SYI	.40812845 00	SZI	.34655599 00	DAI	.20276807 02	RAI	.15420889 03		
SXO	.98344765 00	SYO	.11536811 00	SZO	-.13971741 00	DAO	-.80314955 01	RAO	.66907798 01		
ETE	.15635887 03	ETS	.35221814 03	ETC	.23888891 03						
B.T	-.92154140 03	B.R	.27453032 03	B	.96156407 03	THA	.16341102 03				

ALL VECTORS REFERENCED TO ORBIT PLANE OF TARGET

X	.77563664 03	Y	-.15449618 04	Z	-.18010350 03	DX	-.17685846 01	DY	.19919648 01	DZ	.29514034 00
INC	.17364596 03	LAN	.22733376 03	APF	.73374548 02	MX	-.69483953 00	MY	-.64633768 00	MZ	.81160687-02
WX	-.81377095-01	WY	.75003844-01	WZ	-.99385703 00	PX	-.89415371 00	PY	.43502166 00	PZ	.10604335 00
QX	.44030286 00	QY	.89729059 00	QZ	.31664187-01	RX	-.81079363-01	RY	.75324369-01	RZ	-.99385731 00
BX	-.68059205 00	BY	-.73266245 00	BZ	.43477622-03	TX	.68062764 00	TY	.73262952 00	TZ	.00000000 00
SXI	-.72812920 00	SYI	.67644677 00	SZI	.11066898 00	DAI	.63538824 01	RAI	.13710729 03		
SXO	.98339577 00	SYO	-.15624053 00	SZO	-.92311600-01	DAO	-.52966058 01	RAO	.35097238 03		
ETE	.17297291 03	ETS	.88321867 01	ETC	.25550295 03						
B.T	-.96156421 03	B.R	-.42065712 00	B	.96156431 03	THA	.18002506 03				

EARTH-MOON EXTEND,VIEW PERIODS,FINE PRINT CHECK 1

ALL VECTORS REFERENCED TO TRUE LUNAR EQU. PLANE

X	.80076365 03	Y	-.15279662 04	Z	-.21225701 03	DX	-.17885440 01	DY	.19504933 01	DZ	.42380266 00
INC	.16855810 03	LAN	.26021805 03	APF	.10481946 03	MX	-.66840867 00	MY	-.68557964 00	MZ	.10974158 00
WX	-.19548967 00	WY	.33703412-01	WZ	-.98012639 00	PX	-.89029276 00	PY	.41303883 00	PZ	.19177512 00
QX	.41129367 00	QY	.91008949 00	QZ	-.50738905-01	RX	-.12553022 00	RY	.11290164 00	RZ	-.98564462 00
BX	-.65170902 00	BY	-.75128413 00	BZ	.10415140 00	TX	.66871745 00	TY	.74351662 00	TZ	.00000000 00
SXI	-.73284317 00	SYI	.65911777 00	SZI	.16883311 00	DAI	.97199814 01	RAI	.13803184 03		
SXO	.97129148 00	SYO	-.13149158 00	SZO	-.19824909 00	DAO	-.11434589 02	RAO	.35229027 03		
ETE	.16580489 03	ETS	.38107069 02	ETC	.27584162 03	M1	.10160690 03	M2	.95618115 03		
B.T	-.95618115 03	B.R	-.10160690 03	B	.96156454 03	THA	.18606567 03				

215563037065	214523643675	612554315676	603416473650	204420667067	603534774455
	630101300		0		221406762452

```
                    EARTH-MOON EXTEND,VIEW PERIODS,FINE PRINT          CHECK 1
TIME ON  012110      TIME OFF  012133
                    MONITOR CONTROL WORDS

EXTEND
```

```
*       DATA
    230 BCD 1EXTEND
        TRA 3,4
    100 BCD  EARTH-MOON EXTEND,VIEW PERIODS,FINE PRINT            CHECK 1
    350 DEC 5.55544,10.11,1.
    354 DEC 498.91306
    358 DEC 102.0
    355 DEC 0,28.480312,279.45775
    390 DEC 1,13,1963,65896.426
    413 DEC 0,1,1
    903 DEC 7418.0
    909 DEC 0,38,835.89155,0
    913 DEC 16000.,0,7350.,0
    917 DEC 54.6,7000.,5.0,0
    921 DEC 100.,38,0,30
    682 OCT 76140
    692 DEC -.10130440E7
    992 DEC 1
   1050 DEC 3000.,13
    174 BCD 1YID
    363 DEC .20997157E7,-.15760293E6,-.45791734E5
    366 DEC 7385.2954,-2500.1511,-102.55636
    112 OCT -0
        TRA 3,4
    140 OCT -3
    141 BCD 1MOON
    142 DEC 40E3
    143 BCD 1MOON
    144 DEC 0
    145 DEC 1
    146 BCD 1EARTH
    150 BCD 1EARTH
    147 DEC 0,0
    149 DEC 0
    172 DEC 0
    179 BCD 1
    151 DEC 2,0,0,3000000,200,0,4,0,400,0,400,0
    167 OCT 110000000000
    178 OCT 101000000000
    170 OCT 010110000000,0
        TRA 3,4
    140 OCT -0
    141 BCD 1MOON
    142 DEC 1738.09
    143 BCD 1MOON
    144 DEC 0
    145 DEC 1
    146 BCD 1MOON
    150 BCD 1MOON
    147 DEC 0,0
    149 DEC 0
    172 DEC 0
    179 BCD 1
    151 DEC 400,0,0,3000000
    167 OCT 000001100000
    178 OCT 000000001011
    170 OCT 010110000000,0
        TRA 3,4
        TRA 4,4
        TRA 180
EOF
```

Check Case 2

Check case 2 is an Earth-Venus trajectory made during the Mariner 2 mission. Injection is on September 5, 1962, and the flight time at encounter with Venus is 100.8 days with a miss of 41,012 km.

Public information was needed at the time of the mission as well as the angles printed under "BRONSTEIN ANGLES". Also, at the times the spacecraft passed through the radiometer planes near Venus special prints were needed. Public information, Bronstein angles, and radiometer planes are explained in detail in Appendix D.

This run takes approximately 1 min on the IBM 7094.

* HIT START AFTER OCTAL 150 STOP CHECK CASE 2
* XEO

ENTRY NAME	ENTRY ADD.	NO. OF TRANSFERS	LOAD ADD.
MAIN	00144	00000	00144

LOGICAL TAPE	MACHINE TAPE	TOTAL WRITES	TOTAL READS	NOISE RECORDS WRITING	NOISE RECORDS READING	TOTAL REDUNDANCIES WRITING	TOTAL REDUNDANCIES READING	POSITIONING ERRORS
1	A 1	0	5	0	0	0	0	0
5	A 2	0	11	0	0	0	0	0
6	A 3	15	0	0	0	0	0	0
7	B 4	6	5	0	0	0	0	0

EXECUTION

```
CASE  1                                          SPACE TRAJECTORIES                                                  1

EARTH-VENUS,RADIATION PRES. ON                          CHECK 2
 EPHEMERIS TAPE III WITH SATURN.          B-8 IS T-1456

  GME  .39860320 06     J  .16234500-02     H -.57499999-05     D  .78749999-05    RE  .63781650 04   REM  .63783149 04
    G  .66709998-19     A  .88745998 29     B  .88763998 29     C  .88800998 29   OME  .41780741-02    AU  .14959900 09
  GMM  .49007589 04   GMS  .13271544 12   GMV  .32476950 06   GMA  .42977799 05   GMC  .37918700 08   GMJ  .12671060 09
  ARA  .38300000 01    GB  .38300000 00   MAS  .19822000 03   GB1  .00000000 00   GB2  .00000000 00    SC -.10200000 09

INJECTION CONDITIONS              VENUS            JULIAN DATE 2437912.51634260              SEPT. 5,1962   00 23 32.000

GEOCENTRIC        X0-.14242091 07  Y0-.19394899 07  Z0-.10167163 06 DX0-.17445131 01 DY0-.24233613 01 DZ0-.11043332 00
CARTESIAN        GMC .00000000 00 SGC .00000000 00  TO .14120000 04 GHA .34951873 03 GHO .34361929 03

   0 DAYS  0 HRS.  0 MIN.  0.000 SEC.              JULIAN DATE 2437912.51634260              SEPT. 5,1962   00 23 32.000

        GEOCENTRIC                                                                                  EQUATORIAL COORDINATES

    X -.14242090 07     Y -.19394898 07     Z -.10167163 06    DX -.17445130 01    DY -.24233611 01    DZ -.11043332 00
    R  .24083872 07   DEC -.24194963 01    RA  .23370936 03     V  .29880094 01   PTH  .89380552 02    AZ  .60890348 02
    R  .24083872 07   LAT -.24194963 01   LON  .24419063 03    VE  .17546301 03   PTE  .97569593 00   AZE  .27000513 03
   XS -.14343271 09    YS  .42810709 08    ZS  .18564346 08   DXS -.87218980 01   DYS -.25899282 02   DZS -.11230788 02
   XM -.27632523 06    YM -.27943340 06    ZM -.81923122 05   DXM  .72901701 00   DYM -.58854689 00   DZM -.27195637 00
   XT -.88139819 08    YT -.41412363 08    ZT -.22861454 08   DXT  .21205812 02   DYT -.90989145 01   DZT -.55559324 01
   RS  .15083214 09    VS  .29546149 02    RM  .40143500 06    VM  .97560930 00    RT  .10003128 09    VT  .23734892 02
  GED -.24359648 01   ALT  .24020091 07   LOS  .17386235 03   RAS  .16338108 03   RAM  .22532043 03   LOM  .23580169 03
  DUT  .35000000 02    DT  .76800000 04    DR  .29878348 01   SHA -.22746664 07   DES  .70698655 01   DEM -.11775395 02
  DAC  .00000000 00
 BOARD UNITS
   UE  .20000000 01    VE  .20000000 01   ALF  .80000000 02    S1  .50000000 05    S2  .10000000 05
  UP1  .21400335 02   VP1  .24791112 02   UM1  .59321204 01   VM1  .50486334 01     S  .33980400 01     M  .46952242 02
  UP2  .99001676 02   VP2  .11595556 03   UM2  .21660602 02   VM2  .17243167 02    GM  .18888070 03

                                                      GEOCENTRIC CONIC

EPOCH OF PERICENTER PASSAGE                       JULIAN DATE 2437904.80610830              AUG. 28,1962   07 20 47.758
  SMA -.46364371 05   ECC  .11521562 01     B  .26531785 05   SLR  .15182659 05   APO  .00000000 00   RCA  .70546268 04
   VH  .29320961 01    C3  .85971876 01    C1  .77793677 05   TFP  .66616424 06    TF -.77102342 01   LTF -.77361559 01
   TA  .14959463 03   MTA  .15021988 03    EA  .25901376 03    MA  .24137805 04                       TFI  .00000000 00
  ZAE  .90237325 02   ZAP  .47877867 02   ZAC  .30881518 02   DEF  .12043992 03    IR  .24766069 05    GP -.47423891 02

                                                                  ALL VECTORS REFERENCED TO EARTH EQUATOR PLANE
    X -.14242090 07     Y -.19394898 07     Z -.10167163 06    DX -.17445130 01    DY -.24233611 01    DZ -.11043332 00
  INC  .29200434 02   LAN  .23804502 03   APF  .20544143 03    MX  .69206616 00    MY -.53367882 00    MZ  .48605281 00
   WX -.41395108 00    WY  .25821316 00    WZ  .87291837 00    PX  .15975878 00    PY  .96465332 00    PZ -.20958873 00
   QX -.89617527 00    QY  .52704583-01    QZ -.44057005 00    RX  .21561016-01    RY  .29956763-01    RZ -.99931864 00
   BX -.69847099 00    BY  .52485710 00    BZ -.48648053 00    TX -.81163524 00    TY  .58416457 00    TZ  .00000000 00
  SXI -.30644514 00   SYI  .86343609 00   SZI -.40072914 00   DAI -.23623768 02   RAI  .10954046 03
  SXO -.58376654 00   SYO -.81108222 00   SZO -.36909146-01   DAO -.21152182 01   RAO  .23425600 03
  ETE  .16566223 03   ETS  .72766557 02   ETC  .25367999 03
  B.T  .25278271 05   B.R -.80588785 04     B  .26531785 05   THA  .34231737 03
```

CASE 1 SPACE TRAJECTORIES 2

EARTH-VENUS,RADIATION PRES. ON CHECK 2

HELIOCENTRIC ECLIPTIC COORDINATES

X	.14200850 09	Y	-.48482379 08	Z	.67775074 06	DX	.69773850 01	DY	.25962210 02	DZ	.86299872 00
R	.15005804 09	LAT	.25878306 00	LON	.34114985 03	V	.26897305 02	PTH	-.37969405 01	AZ	.88140100 02
XE	.14343271 09	YE	-.46662530 08	ZE	-.56025000 03	DXE	.87218980 01	DYE	.28229477 02	DZE	.22685527-03
XT	.55292891 08	YT	-.93751661 08	ZT	-.44998445 07	DXT	.29927710 02	DYT	.17671276 02	DZT	-.14772737 01
LTE	-.21281910-03	LOE	.34197889 03	LTT	-.23674152 01	LOT	.30053127 03	RST	.10893542 09	VST	.34786838 02
EPS	.10831390 03	ESP	.86854656 00	SEP	.70817544 02	EPM	.24704604 01	EMP	.16501275 03	MEP	.12516765 02
MPS	.10696072 03	MSP	.73412044 00	SMP	.72305057 02	SEM	.64412592 02	EMS	.11544971 03	ESM	.13759044 00
EPT	.14907053 03	ETP	.70896756 00	TEP	.30220423 02	TPS	.46474516 02	TSP	.40692642 02	STP	.92832838 02
SET	.46190407 02	STE	.92306633 02	EST	.41502958 02	RPM	.20183692 07	RPT	.97957705 08	SPN	.10816216 03
SAC	-.12104729-09										
GCE	.29927327 03	GCT	.97991525 02	SIP	.46470889 02	CPT	.90244570 02	SIN	.90240943 02	D1	.18987786-02
REP	.24083872 07	VEP	.29880094 01	CPE	.65410328 02	CPS	.82023966 02	D2	.93847737-04	D3	.59467610-08
PUBLIC INFORMATION											
X	.88239992 01	Y	-.30125554 01	RPE	.14965024 07	RPT	.60868096 08	VGC	.66839866 04	V	.60167557 05

HELIOCENTRIC CONIC

EPOCH OF PERICENTER PASSAGE JULIAN DATE 2438036.71366609 JAN. 7,1963 05 07 40.750

SMA	.12695307 09	ECC	.19329388 00	B	.12455884 09	SLR	.12220978 09	APO	.15149231 09	RCA	.10241382 09
VH	.26584169 02	C3	-.10453898 04	C1	.40272975 10	TFP	-.10730649 08	TF	.12419732 03	PER	.28554212 03
TA	-.16376217 03	MTA	.00000000 00	EA	-.16031378 03	MA	-.15658298 03			TFI	.00000000 00

ALL VECTORS REFERENCED TO ECLIPTIC PLANE

X	.14200850 09	Y	-.48482379 08	Z	.67775074 06	DX	.69773850 01	DY	.25962210 02	DZ	.86299872 00
INC	.18777918 01	LAN	.33323143 03	APF	.17168476 03	MX	.30169838 00	MY	.94401315 00	MZ	.32088219-01
WX	-.14758318-01	WY	-.29256400-01	WZ	.99946299 00	PX	-.81834735 00	PY	.57470416 00	PZ	.47388889-02
QX	-.57453417 00	QY	-.81783795 00	QZ	-.32423564-01	RX	-.38781012-02	RY	.27234901-02	RZ	-.99998862 00
BX	.57453425 00	BY	.81783807 00	BZ	.32423568-01	TX	.57471069 00	TY	.81835666 00	TZ	.00000000 00
DAP	.27152051 00	RAP	.14492062 03								
B.T	.12449333 09	B.R	-.40386862 07	B	.12455882 09	THA	.35814192 03				

BRONSTEIN ANGLES REFERENCE BODY IS EARTH GHR -.10831390 03

BODY 1 IS MOON	GHG	-.10697218 03	GSL	-.20745734 01	GCK	-.21689548 01	ACK -.70739073 01
	GLG	-.10801297 03	GLT	-.18555884 02	ALT	-.19516672 02	BLT -.47347763 02
BODY 2 IS VENUS	GHG	.44451807 02	GSL	-.15258050 02	GCK	-.21281757 02	ACK -.20913543 02
	GLG	.46416645 02	GLT	-.30298027 01	ALT	-.39340401 01	BLT -.43902269 01
BODY 3 IS EARTH	GHG	-.10831390 03	GSL	-.26680426-07	GCK	.00000000 00	ACK -.16008255-06
	GLG	-.10919649 03	GLT	-.16358425 02	ALT	-.17347713 02	BLT -.41754784 02

0 DAYS 8 HRS. 31 MIN. 27.582 SEC. JULIAN DATE 2437912.87152293 SEPT. 5,1962 08 54 59.582

CASE 1 SPACE TRAJECTORIES 3

EARTH-VENUS,RADIATION PRES. ON CHECK 2

GEOCENTRIC EQUATORIAL COORDINATES

X	-.14777297 07	Y	-.20137725 07	Z	-.10504901 06	DX	-.17436425 01	DY	-.24178361 01	DZ	-.10967369 00
R	.25000000 07	DEC	-.24082530 01	RA	.23372834 03	V	.29829932 01	PTH	.89438503 02	AZ	.57558268 02
R	.24999999 07	LAT	-.24082530 01	LON	.11599462 03	VE	.18214161 03	PTE	.93834846 00	AZE	.27000494 03
XS	-.14369775 09	YS	.42015138 08	ZS	.18219358 08	DXS	-.85508605 01	DYS	-.25948955 02	DZS	-.11252419 02
XM	-.25316554 06	YM	-.29664635 06	ZM	-.90016773 05	DXM	.77970902 00	DYM	-.53263620 00	DZM	-.25524655 00
XT	-.87489121 08	YT	-.41688301 08	ZT	-.23030290 08	DXT	.21201209 02	DYT	-.88840598 01	DZT	-.54473279 01
RS	.15081863 09	VS	.29547968 02	RM	.40024350 06	VM	.97816066 00	RT	.99612524 08	VT	.23623953 02
GED	-.24246451 01	ALT	.24936218 07	LOS	.45968124 02	RAS	.16370184 03	RAM	.22952171 03	LOM	.11178799 03
DUT	.35000000 02	DT	-.11920929-06	DR	.29828500 01	SHA	-.23566909 07	DES	.69384553 01	DEM	-.12997293 02
DAC	.00000000 00										
BOARD UNITS											
UE	.20000000 01	VE	.20000000 01	ALF	.80000000 02	S1	.50000000 05	S2	.10000000 05		
UP1	.22129203 02	VP1	.25665808 02	UM1	.57348311 01	VM1	.52248589 01	S	.37628071 01	M	.49074708 02
UP2	.10264602 03	VP2	.12032904 03	UM2	.20674156 02	VM2	.18124295 02	GM	.29506048 03		

HELIOCENTRIC ECLIPTIC COORDINATES

X	.14222002 09	Y	-.47684723 08	Z	.70421175 06	DX	.68072180 01	DY	.26021760 02	DZ	.86158156 00
R	.15000287 09	LAT	.26898480 00	LON	.34146429 03	V	.26911197 02	PTH	-.38651425 01	AZ	.88142928 02
XE	.14369775 09	YE	-.45795380 08	ZE	-.55212500 03	DXE	.85508605 01	DYE	.28283656 02	DZE	.31089783-03
XT	.56208629 08	YT	-.93204841 08	ZT	-.45449607 07	DXT	.29752069 02	DYT	.17965781 02	DZT	-.14630260 01
LTE	-.20975148-03	LOE	.34232331 03	LTT	-.23911365 01	LOT	.30109273 03	RST	.10893672 09	VST	.34786424 02
EPS	.10859380 03	ESP	.90018725 00	SEP	.70505989 02	EPM	.21455063 01	EMP	.16647676 03	MEP	.11377750 02
MPS	.10809806 03	MSP	.76236400 00	SMP	.71139567 02	SEM	.68344762 02	EMS	.11151378 03	ESM	.14162004 00
EPT	.14925939 03	ETP	.73501950 00	TEP	.30005569 02	TPS	.46484709 02	TSP	.40448246 02	STP	.93067042 02
SET	.46186829 02	STE	.92525704 02	EST	.41287462 02	RPM	.21091006 07	RPT	.97455601 08	SPN	.10844762 03
SAC	-.12113634-09										
GCE	.29936571 03	GCT	.97963913 02	SIP	.46481064 02	CPT	.90265269 02	SIN	.90261623 02	D1	.19085614-02
REP	.25000000 07	VEP	.29829932 01	CPE	.65391798 02	CPS	.82079070 02	D2	.10212292-03	D3	.65058351-08
PUBLIC INFORMATION											
X	.88371423 01	Y	-.29629913 01	RPE	.15534280 07	RPT	.60556103 08	VGC	.66727656 04	V	.60198633 05

BRONSTEIN ANGLES REFERENCE BODY IS EARTH GHR -.10859381 03

BODY 1 IS MOON		GHG	-.10811053 03	GSL	-.20903794 01	GCK	-.21992340 01	ACK	-.66970175 01
		GLG	-.10921736 03	GLT	-.18503098 02	ALT	-.19597588 02	BLT	-.45474314 02
BODY 2 IS VENUS		GHG	.44438563 02	GSL	-.15344756 02	GCK	-.21401806 02	ACK	-.21023028 02
		GLG	.46424999 02	GLT	-.30875699 01	ALT	-.40034485 01	BLT	-.44744338 01
BODY 3 IS EARTH		GHG	-.10859381 03	GSL	-.00000000 00	GCK	.00000000 00	ACK	.10672171-06
		GLG	-.10949465 03	GLT	-.16373976 02	ALT	-.17398353 02	BLT	-.41361740 02

10 DAYS 0 HRS. 0 MIN. 0.000 SEC. JULIAN DATE 2437922.51634260 SEPT. 15,1962 00 23 32.000

CASE 1 SPACE TRAJECTORIES 4

EARTH-VENUS,RADIATION PRES. ON CHECK 2

GEOCENTRIC — EQUATORIAL COORDINATES

X	-.29459880 07	Y	-.39596997 07	Z	-.18561787 06	DX	-.18101548 01	DY	-.22479138 01	DZ	-.83385944-01
R	.49388785 07	DEC	-.21538540 01	RA	.23335101 03	V	.28873396 01	PTH	.87751053 02	AZ	.28277974 03
R	.49388783 07	LAT	-.21538540 01	LON	.23397587 03	VE	.36001630 03	PTE	.45916459 00	AZE	.27000399 03
XS	-.14886135 09	YS	.19932706 08	ZS	.86430645 07	DXS	-.38169826 01	DYS	-.26934073 02	DZS	-.11680076 02
XM	.35565600 06	YM	.31766500 05	ZM	-.15071125 05	DXM	-.67912727-01	DYM	.10293403 01	DZM	.38498187 00
XT	-.70144213 08	YT	-.46752959 08	ZT	-.26364985 08	DXT	.20130610 02	DYT	-.33993061 01	DZT	-.25942960 01
RS	.15043842 09	VS	.29604692 02	RM	.35738976 06	VM	.11010743 01	RT	.88324188 08	VT	.20579774 02
GED	-.21685181 01	ALT	.49325003 07	LOS	.17299824 03	RAS	.17237339 03	RAM	.51040009 01	LOM	.57288589 01
DUT	.35000000 02	DT	.86399999 05	DR	.28851157 01	SHA	-.43277149 07	DES	.32935992 01	DEM	-.24168786 01
DAC	.00000000 00										
BOARD UNITS											
UE	.20000000 01	VE	.20000000 01	ALF	.80000000 02	S1	.50000000 05	S2	.10000000 05		
UP1	.41932863 02	VP1	.48608784 02	UM1	-.19946254 01	VM1	.15607943 01	S	.12578390 02	M	.20400525 03
UP2	.20166431 03	VP2	.23504392 03	UM2	-.17973127 02	VM2	-.19602832 00	GM	.19841657 03		

GEOCENTRIC CONIC

EPOCH OF PERICENTER PASSAGE JULIAN DATE 2437904.35315628 AUG. 27,1962 20 28 32.703

SMA	-.48756918 05	ECC	.41367221 01	B	.19571211 06	SLR	.78559440 06	APO	.00000000 00	RCA	.15293691 06
VH	.28592509 01	C3	.81753156 01	C1	.55958953 06	TFP	.15692993 07	TF	-.81631862 01	LTF	-.84434255 01
TA	.10172916 03	MTA	.10398910 03	EA	.22349390 03	MA	.52728379 04			TFI	.10000000 02
ZAE	.13512925 03	ZAP	.11968836 03	ZAC	.11811324 03	DEF	.27978202 02	IR	.25357953 05	GP	.15610698 02

ALL VECTORS REFERENCED TO EARTH EQUATOR PLANE

X	-.29459880 07	Y	-.39596997 07	Z	-.18561787 06	DX	-.18101548 01	DY	-.22479138 01	DZ	-.83385944-01
INC	.16704328 03	LAN	.22394295 03	APF	.24862154 03	MX	-.78739574 00	MY	.57545474 00	MZ	.22104773 00
WX	-.15559563 00	WY	.16144529 00	WZ	-.97453976 00	PX	.89221221 00	PY	-.40045667 00	PZ	-.20879204 00
QX	-.42396789 00	QY	-.90198165 00	QZ	-.81734100-01	RX	.18090594-01	RY	.22456931-01	RZ	-.99958408 00
BX	.76326096 00	BY	-.60662167 00	BZ	-.22235753 00	TX	-.77874902 00	TY	.62733561 00	TZ	.00000000 00
SXI	-.19571277 00	SYI	-.97203574 00	SZI	-.12978283 00	DAI	-.74570442 01	RAI	.25861608 03		
SXO	-.62707470 00	SYO	-.77842513 00	SZO	-.28837186-01	DAO	-.16524763 01	RAO	.23114617 03		
ETE	.17171268 02	ETS	.16263696 03	ETC	.25829587 03						
B.T	-.19235587 06	B.R	.36089462 05	B	.19571211 06	THA	.16937380 03				

HELIOCENTRIC — ECLIPTIC COORDINATES

X	.14591537 09	Y	-.25432617 08	Z	.14052337 07	DX	.20068278 01	DY	.27262056 02	DZ	.81851578 00
R	.14812186 09	LAT	.54357377 00	LON	.35011283 03	V	.27348071 02	PTH	-.56579135 01	AZ	.88222547 02
XE	.14886135 09	YE	-.21725914 08	ZE	.23256250 03	DXE	.38169826 01	DYE	.29357596 02	DZE	.72550773-03
XT	.78717141 08	YT	-.75108642 08	ZT	-.55886812 07	DXT	.23947592 02	DYT	.25206780 02	DZT	-.10270772 01
LTE	.88573447-04	LOE	.35169645 03	LTT	-.29404698 01	LOT	.31634381 03	RST	.10894462 09	VST	.34783959 02
EPS	.11713192 03	ESP	.16742698 01	SEP	.61193807 02	EPM	.29580779 01	EMP	.45491923 02	MEP	.13154998 03
MPS	.12009000 03	MSP	.17042457 01	SMP	.58205780 02	SEM	.16725519 03	EMS	.12714846 02	ESM	.29673510-01
EPT	.15400721 03	ETP	.14042330 01	TEP	.24588540 02	TPS	.46490702 02	TSP	.33935494 02	STP	.99573804 02
SET	.45688635 02	STE	.98852516 02	EST	.35458847 02	RPM	.51828314 07	RPT	.83858354 08	SPN	.11705793 03
SAC	-.12423251-09										
GCE	.30190708 03	GCT	.96885619 02	SIP	.46486466 02	CPT	.90610419 02	SIN	.90606183 02	D1	.22180259-02
REP	.49388785 07	VEP	.28873396 01	CPE	.65333488 02	CPS	.83681642 02	D2	.36892430-03	D3	.27659368-07
PUBLIC INFORMATION											
X	.90667605 01	Y	-.15803096 01	RPE	.30688768 07	RPT	.52107165 08	VGC	.64587947 04	V	.61175893 05

HELIOCENTRIC CONIC

EPOCH OF PERICENTER PASSAGE JULIAN DATE 2438036.91813368 JAN. 7,1963 10 02 06.750

CASE 1 SPACE TRAJECTORIES 5

EARTH-VENUS,RADIATION PRES. ON CHECK 2

SMA	.12711484 09	ECC	.19174264 00	B	.12475623 09	SLR	.12244143 09	APO	.15148817 09	RCA	.10274151 09
VH	.26610080 02	C3	-.10440594 04	C1	.40311126 10	TFP	-.98843147 07	TF	.12440179 03	PER	.28608809 03
TA	-.15471574 03	MTA	.00000000 00	EA	-.14952896 03	MA	-.14395791 03			TFI	.10000000 02

ALL VECTORS REFERENCED TO ECLIPTIC PLANE

X	.14591537 09	Y	-.25432617 08	Z	.14052337 07	DX	.20068278 01	DY	.27262056 02	DZ	.81851578 00
INC	.18586742 01	LAN	.33311370 03	APF	.17172330 03	MX	.16294175 00	MY	.98371094 00	MZ	.30863458-01
WX	-.14667552-01	WY	-.28928481-01	WZ	.99947387 00	PX	-.81755123 00	PY	.57583654 00	PZ	.46690575-02
QX	-.57566864 00	QY	-.81705258 00	QZ	-.32096628-01	RX	-.38172362-02	RY	.26886438-02	RZ	-.99998885 00
BX	.57566879 00	BY	.81705279 00	BZ	.32096636-01	TX	.57584295 00	TY	.81756033 00	TZ	.00000000 00
DAP	.26751887 00	RAP	.14484131 03								
B.T	.12469194 09	B.R	-.40042977 07	B	.12475622 09	THA	.35816066 03				

BRONSTEIN ANGLES REFERENCE BODY IS EARTH GHR -.11713193 03

BODY 1 IS MOON	GHG	-.12009000 03	GSL	-.10173553-01	GCK	-.11758804-01	ACK	-.20293345-01
	GLG	-.12162791 03	GLT	-.16033170 02	ALT	-.18948786 02	BLT	-.28721362 02
BODY 2 IS VENUS	GHG	.43668574 02	GSL	-.17863805 02	GCK	-.25021465 02	ACK	-.24015822 02
	GLG	.46360679 02	GLT	-.47841129 01	ALT	-.60844345 01	BLT	-.69144045 01
BODY 3 IS EARTH	GHG	-.11713193 03	GSL	.40020639-07	GCK	.00000000 00	ACK	.53360853-07
	GLG	-.11858957 03	GLT	-.16527634 02	ALT	-.18937025 02	BLT	-.31801495 02

20 DAYS 0 HRS. 0 MIN. 0.000 SEC. JULIAN DATE 2437932.51634260 SEPT. 25,1962 00 23 32.000

GEOCENTRIC EQUATORIAL COORDINATES

X	-.45979100 07	Y	-.58249611 07	Z	-.25234973 06	DX	-.20370841 01	DY	-.20667667 01	DZ	-.75129270-01
R	.74252696 07	DEC	-.19475857 01	RA	.23171434 03	V	.29029090 01	PTH	.83685780 02	AZ	.27412070 03
R	.74252692 07	LAT	-.19475857 01	LON	.22248280 03	VE	.54147249 03	PTE	.30530860 00	AZE	.27000243 03
XS	-.14998420 09	YS	-.35242234 07	ZS	-.15280332 07	DXS	.12410391 01	DYS	-.27232532 02	DZS	-.11807609 02
XM	-.30698800 06	YM	.23379322 06	ZM	.10962319 06	DXM	-.65192351 00	DYM	-.70124388 00	DZM	-.21031094 00
XT	-.53836665 08	YT	-.47595011 08	ZT	-.27452688 08	DXT	.17381039 02	DYT	.12471886 01	DZT	-.13363361-02
RS	.15003338 09	VS	.29708090 02	RM	.40114604 06	VM	.98029481 00	RT	.76924128 08	VT	.17425728 02
GED	-.19608478 01	ALT	.74188914 07	LOS	.17211451 03	RAS	.18134605 03	RAM	.14270814 03	LOM	.13347660 03
DUT	.35000000 02	DT	.17280000 06	DR	.28852991 01	SHA	-.57189891 07	DES	-.58354574 00	DEM	.15859241 02
DAC	.00000000 00										

BOARD UNITS

UE	.20000000 01	VE	.20000000 01	ALF	.80000000 02	S1	.50000000 05	S2	.10000000 05		
UP1	.63630015 02	VP1	.70642800 02	UM1	.45954746 01	VM1	-.39481065 00	S	.19997205 02	M	.33229953 03
UP2	.31015007 03	VP2	.34521400 03	UM2	.14977373 02	VM2	-.99740532 01	GM	.20663015 03		

CASE 1 SPACE TRAJECTORIES 6

EARTH-VENUS,RADIATION PRES. ON CHECK 2

HELIOCENTRIC ECLIPTIC COORDINATES

X	.14538629 09	Y	-.16033217 07	Z	.20856945 07	DX	-.32781232 01	DY	.27756096 02	DZ	.75229526 00
R	.14541009 09	LAT	.82185189 00	LON	.35936817 03	V	.27959129 02	PTH	-.73417881 01	AZ	.88339306 02
XE	.14998420 09	YE	.38412284 07	ZE	-.14471875 03	DXE	-.12410391 01	DYE	.29682156 02	DZE	-.10039806-02
XT	.96147538 08	YT	-.50746771 08	ZT	-.62519852 07	DXT	.16140000 02	DYT	.30825868 02	DZT	-.49840236 00
LTE	-.55266189-04	LOE	.14670764 01	LTT	-.32912538 01	LOT	.33217486 03	RST	.10889753 09	VST	.34799168 02
EPS	.12737355 03	ESP	.22540195 01	SEP	.50372416 02	EPM	.30935219 01	EMP	.87329743 02	MEP	.89576740 02
MPS	.12438181 03	MSP	.23480623 01	SMP	.53270140 02	SEM	.41534781 02	EMS	.13836343 03	ESM	.10183584 00
EPT	.15635377 03	ETP	.22187724 01	TEP	.21427414 02	TPS	.45843538 02	TSP	.27490443 02	STP	.10666602 03
SET	.44126365 02	STE	.10641340 03	EST	.29460226 02	RPM	.74331379 07	RPT	.70064615 08	SPN	.12732434 03
SAC	-.12890938-09										
GCE	.30509138 03	GCT	.94975755 02	SIP	.45838468 02	CPT	.90458545 02	SIN	.90453475 02	D1	.26546923-02
REP	.74252696 07	VEP	.29029090 01	CPE	.65895985 02	CPS	.85551157 02	D2	.76140991-03	D3	.70325434-07
PUBLIC INFORMATION											
X	.90338854 01	Y	-.99625789-01	RPE	.46138486 07	RPT	.43536134 08	VGC	.64936224 04	V	.62542789 05

BRONSTEIN ANGLES REFERENCE BODY IS EARTH GHR -.12737356 03

BODY 1 IS MOON	GHG	-.12438566 03	GSL	.80179419 00	GCK	.97154427 00	ACK	.14195079 01
	GLG	-.12632753 03	GLT	-.16236089 02	ALT	-.20403809 02	BLT	-.26174749 02
BODY 2 IS VENUS	GHG	.41696806 02	GSL	-.21098551 02	GCK	-.30115627 02	ACK	-.27327321 02
	GLG	.45576327 02	GLT	-.68343862 01	ALT	-.87402801 01	BLT	-.97153276 01
BODY 3 IS EARTH	GHG	-.12737356 03	GSL	-.23345373-07	GCK	.00000000 00	ACK	.66701066-08
	GLG	-.12954919 03	GLT	-.16314577 02	ALT	-.21375349 02	BLT	-.24684578 02

30 DAYS 0 HRS. 0 MIN. 0.000 SEC. JULIAN DATE 2437942.51634260 OCT. 5,1962 00 23 32.000

GEOCENTRIC EQUATORIAL COORDINATES

X	-.65251140 07	Y	-.75246035 07	Z	-.32267625 06	DX	-.24711202 01	DY	-.18707230 01	DZ	-.94631074-01
R	.99649831 07	DEC	-.18556190 01	RA	.22906913 03	V	.31008055 01	PTH	.78063285 02	AZ	.27032223 03
R	.99649851 07	LAT	-.18556181 01	LON	.20998133 03	VE	.72692475 03	PTE	.23912065 00	AZE	.27000028 03
XS	-.14670660 09	YS	-.26886237 08	ZS	-.11658179 08	DXS	.63318676 01	DYS	-.26704699 02	DZS	-.11580698 02
XM	-.68798000 05	YM	-.36469750 06	ZM	-.13060512 06	DXM	.98580390 00	DYM	-.89724778-01	DZM	-.10839426 00
XT	-.40459365 08	YT	-.44983061 08	ZT	-.26523307 08	DXT	.13416601 02	DYT	.45558967 01	DZT	.20502900 01
RS	.14960485 09	VS	.29788354 02	RM	.39344012 06	VM	.99579575 00	RT	.66059987 08	VT	.14316601 02
GED	-.18682548 01	ALT	.99586049 07	LOS	.17129730 03	RAS	.19038509 03	RAM	.25931703 03	LOM	.24022925 03
DUT	.35000000 02	DT	.17280000 06	DR	.30337558 01	SHA	-.62315825 07	DES	-.44693897 01	DEM	-.19387587 02
DAC	.00000000 00										
BOARD UNITS											
UE	.20000000 01	VE	.20000000 01	ALF	.80000000 02	S1	.50000000 05	S2	.10000000 05		
UP1	.88221166 02	VP1	.90695894 02	UM1	.39473964 01	VM1	.58893874 01	S	.26255580 02	M	.65739161 02
UP2	.43310583 03	VP2	.44547947 03	UM2	.11736982 02	VM2	.21446937 02	GM	.21389765 03		

CASE 1 SPACE TRAJECTORIES 7

EARTH-VENUS,RADIATION PRES. ON CHECK 2

HELIOCENTRIC ECLIPTIC COORDINATES

X	.14018149 09	Y	.22273117 08	Z	.26971653 07	DX	-.88029878 01	DY	.27353662 02	DZ	.65822661 00
R	.14196554 09	LAT	.10886118 01	LON	.90281302 01	V	.28742802 02	PTH	-.87819907 01	AZ	.88503720 02
XE	.14670660 09	YE	.29304997 08	ZE	-.32325000 03	DXE	-.63318676 01	DYE	.29107619 02	DZE	.81264972-03
XT	.10624724 09	YT	-.22516906 08	ZT	-.64386316 07	DXT	.70847340 01	DYT	.34103135 02	DZT	.69384813-01
LTE	-.12379853-03	LOE	.11296292 02	LTT	-.33927368 01	LOT	.34803439 03	RST	.10879771 09	VST	.34831337 02
EPS	.13877645 03	ESP	.25158089 01	SEP	.38707737 02	EPM	.13205653 01	EMP	.14428722 03	MEP	.34392184 02
MPS	.13981665 03	MSP	.23858418 01	SMP	.37797499 02	SEM	.68658291 02	EMS	.11120123 03	ESM	.14040588 00
EPT	.15442677 03	ETP	.37334798 01	TEP	.21839743 02	TPS	.44352715 02	TSP	.21457260 02	STP	.11419002 03
SET	.41039045 02	STE	.11546657 03	EST	.23494388 02	RPM	.96428813 07	RPT	.56931032 08	SPN	.13873978 03
SAC	-.13524080-09										
GCE	.30974742 03	GCT	.91987710 02	SIP	.44346476 02	CPT	.89687219 02	SIN	.89680979 02	D1	.32671109-02
REP	.99649831 07	VEP	.31008055 01	CPE	.67059327 02	CPS	.87620662 02	D2	.13388781-02	D3	.15982860-06
PUBLIC INFORMATION											
X	.87104739 01	Y	.13839873 01	RPE	.61919534 07	RPT	.35375304 08	VGC	.69363042 04	V	.64295816 05

BRONSTEIN ANGLES REFERENCE BODY IS EARTH GHR -.13877645 03

BODY 1 IS MOON	GHG	-.13982335 03	GSL	-.80501121 00	GCK	-.12476788 01	ACK	-.10535473 01
	GLG	-.14320161 03	GLT	-.16088327 02	ALT	-.26876030 02	BLT	-.19804343 02
BODY 2 IS VENUS	GHG	.37701219 02	GSL	-.25345678 02	GCK	-.37759708 02	ACK	-.30907669 02
	GLG	.43823222 02	GLT	-.92342542 01	ALT	-.12131351 02	BLT	-.12696595 02
BODY 3 IS EARTH	GHG	-.13877645 03	GSL	.53360853-07	GCK	.57220459-05	ACK	.00000000 00
	GLG	-.14188739 03	GLT	-.15705730 02	ALT	-.25628351 02	BLT	-.19662757 02

40 DAYS 0 HRS. 0 MIN. 0.000 SEC. JULIAN DATE 2437952.51634260 OCT. 15,1962 00 23 32.000

GEOCENTRIC EQUATORIAL COORDINATES

X	-.89645500 07	Y	-.90925810 07	Z	-.43980725 06	DX	-.32316698 01	DY	-.18013425 01	DZ	-.19978082 00
R	.12776213 08	DEC	-.19727328 01	RA	.22540623 03	V	.37051905 01	PTH	.73707023 02	AZ	.26572971 03
R	.12776215 08	LAT	-.19727328 01	LON	.19646209 03	VE	.93214747 03	PTE	.21859935 00	AZE	.26999523 03
XS	-.13909763 09	YS	-.49439428 08	ZS	-.21438598 08	DXS	.11238529 02	DYS	-.25377836 02	DZS	-.11004393 02
XM	.26498000 06	YM	.23467300 06	ZM	.67616500 05	DXM	-.70543361 00	DYM	.76178455 00	DZM	.33864570 00
XT	-.30873121 08	YT	-.40179778 08	ZT	-.24108231 08	DXT	.86948840 01	DYT	.62786991 01	DZT	.34134547 01
RS	.14917112 09	VS	.29856921 02	RM	.36035788 06	VM	.10920774 01	RT	.56113909 08	VT	.11254987 02
GED	-.19861658 01	ALT	.12769834 08	LOS	.17062258 03	RAS	.19956672 03	RAM	.41528915 02	LOM	.12584777 02
DUT	.35000000 02	DT	.17280000 06	DR	.35563890 01	SHA	-.56966139 07	DES	-.82630585 01	DEM	.10814919 02
DAC	.00000000 00										
BOARD UNITS											
UE	.20000000 01	VE	.20000000 01	ALF	.80000000 02	S1	.50000000 05	S2	.10000000 05		
UP1	.11864908 03	VP1	.10902592 03	UM1	-.16687981 01	VM1	-.56515822 00	S	.31778006 02	M	.22497238 03
UP2	.58524542 03	VP2	.53712959 03	UM2	-.16343991 02	VM2	-.10825791 02	GM	.22054062 03		

CASE 1 SPACE TRAJECTORIES 8

EARTH-VENUS,RADIATION PRES. ON CHECK 2

HELIOCENTRIC ECLIPTIC COORDINATES

X	.13013308 09	Y	.45370540 08	Z	.32142179 07	DX	-.14470198 02	DY	.25928870 02	DZ	.53328025 00
R	.13785295 09	LAT	.13360439 01	LON	.19220969 02	V	.29698103 02	PTH	-.99150295 01	AZ	.88721584 02
XE	.13909763 09	YE	.53887572 08	ZE	.39725000 03	DXE	-.11238529 02	DYE	.27661005 02	DZE	-.61988831-04
XT	.10822451 09	YT	.74332726 07	ZT	-.61330668 07	DXT	-.25436446 01	DYT	.34779432 02	DZT	.63376832 00
LTE	.15258146-03	LOE	.21176781 02	LTT	-.32358661 01	LOT	.39291205 01	RST	.10865272 09	VST	.34878083 02
EPS	.15115220 03	ESP	.23683552 01	SEP	.26479436 02	EPM	.26318715 00	EMP	.93802930 01	MEP	.17035631 03
MPS	.15131381 03	MSP	.24163594 01	SMP	.26269813 02	SEM	.15819726 03	EMS	.21751440 02	ESM	.51396029-01
EPT	.14878817 03	ETP	.67759007 01	TEP	.24435919 02	TPS	.41815298 02	TSP	.15954747 02	STP	.12222995 03
SET	.35699012 02	STE	.12676145 03	EST	.17539533 02	RPM	.13131617 08	RPT	.44795017 08	SPN	.15112360 03
SAC	-.14343049-09										
GCE	.31844269 03	GCT	.87443339 02	SIP	.41807369 02	CPT	.88200986 02	SIN	.88193056 02	D1	.41522476-02
REP	.12776213 08	VEP	.37051905 01	CPE	.68955279 02	CPS	.89872955 02	D2	.22147299-02	D3	.36233096-06
PUBLIC INFORMATION											
X	.80860949 01	Y	.28191947 01	RPE	.79387705 07	RPT	.27834333 08	VGC	.82882750 04	V	.66432764 05

BRONSTEIN ANGLES REFERENCE BODY IS EARTH GHR -.15115221 03

BODY 1 IS MOON	GHG	-.15131450 03	GSL	.20745675 00	GCK	.43219376 00	ACK	.23648078 00
	GLG	-.15571856 03	GLT	-.14307425 02	ALT	-.33889570 02	BLT	-.15626498 02
BODY 2 IS VENUS	GHG	.29378976 02	GSL	-.31207764 02	GCK	-.50999343 02	ACK	-.34807636 02
	GLG	.40772828 02	GLT	-.12044302 02	ALT	-.16677578 02	BLT	-.15730387 02
BODY 3 IS EARTH	GHG	-.15115221 03	GSL	.00000000 00	GCK	.57220459-05	ACK	.10672171-06
	GLG	-.15568739 03	GLT	-.14569084 02	ALT	-.34321766 02	BLT	-.15913592 02

50 DAYS 0 HRS. 0 MIN. 0.000 SEC. JULIAN DATE 2437962.51634260 OCT. 25,1962 00 23 32.000

GEOCENTRIC EQUATORIAL COORDINATES

X	-.12182577 08	Y	-.10732634 08	Z	-.71986125 06	DX	-.42535785 01	DY	-.20558784 01	DZ	-.48200476 00
R	.16251855 08	DEC	-.25386933 01	RA	.22137948 03	V	.47488835 01	PTH	.74116477 02	AZ	.25756052 03
R	.16251856 08	LAT	-.25386933 01	LON	.18257889 03	VE	.11852189 04	PTE	.22080635 00	AZE	.26998646 03
XS	-.12735986 09	YS	-.70529521 08	ZS	-.30583030 08	DXS	.15878443 02	DYS	-.23311293 02	DZS	-.10107605 02
XM	-.40167200 06	YM	.36811000 05	ZM	.44580750 05	DXM	-.13040555 00	DYM	-.90233755 00	DZM	-.32850087 00
XT	-.25464185 08	YT	-.34625456 08	ZT	-.20852910 08	DXT	.38591529 01	DYT	.63075127 01	DZT	.39913850 01
RS	.14876246 09	VS	.29961726 02	RM	.40581139 06	VM	.96908795 00	RT	.47772280 08	VT	.84029120 01
GED	-.25559711 01	ALT	.16245477 08	LOS	.17017628 03	RAS	.20897686 03	RAM	.17476379 03	LOM	.13596320 03
DUT	.35000000 02	DT	.17280000 06	DR	.45675716 01	SHA	-.43232483 07	DES	-.11863629 02	DEM	.63070068 01
DAC	.00000000 00										
BOARD UNITS											
UE	.20000000 01	VE	.20000000 01	ALF	.80000000 02	S1	.50000000 05	S2	.10000000 05		
UP1	.15879332 03	VP1	.12765883 03	UM1	.62708984 01	VM1	.17265080 01	S	.36885419 02	M	.15740269 02
UP2	.78596658 03	VP2	.63029414 03	UM2	.23354492 02	VM2	.63254027 00	GM	.22682860 03		

CASE 1 SPACE TRAJECTORIES 9

EARTH-VENUS,RADIATION PRES. ON CHECK 2

HELIOCENTRIC ECLIPTIC COORDINATES

X	.11517728 09	Y	.66741674 08	Z	.36090715 07	DX	-.20132022 02	DY	.23330328 02	DZ	.37499428 00
R	.13316637 09	LAT	.15530185 01	LON	.30090963 02	V	.30817902 02	PTH	-.10676333 02	AZ	.88997374 02
XE	.12735986 09	YE	.76874800 08	ZE	-.27450000 03	DXE	-.15878443 02	DYE	.25408268 02	DZE	-.68151950-03
XT	.10189568 09	YT	.36811432 08	ZT	-.53568197 07	DXT	-.12019290 02	DYT	.32783049 02	DZT	.11519147 01
LTE	-.10572352-03	LOE	.31115307 02	LTT	-.28306250 01	LOT	.19863060 02	RST	.10847352 09	VST	.34935920 02
EPS	.16271225 03	ESP	.18604107 01	SEP	.15427314 02	EPM	.10706862 01	EMP	.13155416 03	MEP	.47375155 02
MPS	.16198909 03	MSP	.19073919 01	SMP	.16103490 02	SEM	.38573807 02	EMS	.14132852 03	ESM	.97165341-01
EPT	.14165451 03	ETP	.12184308 02	TEP	.26161171 02	TPS	.38059878 02	TSP	.11124849 02	STP	.13081527 03
SET	.27162190 02	STE	.14123946 03	EST	.11598345 02	RPM	.15979832 08	RPT	.33950077 08	SPN	.16268976 03
SAC	-.15370375-09										
GCE	.34023418 03	GCT	.80448443 02	SIP	.38049415 02	CPT	.85932576 02	SIN	.85922112 02	D1	.54786327-02
REP	.16251855 08	VEP	.47488835 01	CPE	.71495425 02	CPS	.92277189 02	D2	.35814513-02	D3	.86408573-06
PUBLIC INFORMATION											
X	.71567845 01	Y	.41471354 01	RPE	.10098435 08	RPT	.21095600 08	VGC	.10622950 05	V	.68937684 05

BRONSTEIN ANGLES REFERENCE BODY IS EARTH GHR -.16271225 03

BODY 1 IS MOON	GHG	-.16200651 03	GSL	.80518538 00	GCK	.26049289 01	ACK	.84658572 00
	GLG	-.16924743 03	GLT	-.12957354 02	ALT	-.53982700 02	BLT	-.13175978 02
BODY 2 IS VENUS	GHG	.79046312 01	GSL	-.37352303 02	GCK	-.79785736 02	ACK	-.37616447 02
	GLG	.35979678 02	GLT	-.15312914 02	ALT	-.23198112 02	BLT	-.18686756 02
BODY 3 IS EARTH	GHG	-.16271225 03	GSL	.00000000 00	GCK	.00000000 00	ACK	.00000000 00
	GLG	-.17033823 03	GLT	-.12831716 02	ALT	-.56587625 02	BLT	-.13005242 02

60 DAYS 0 HRS. 0 MIN. 0.000 SEC. JULIAN DATE 2437972.51634260 NOV. 4,1962 00 23 32.000

GEOCENTRIC EQUATORIAL COORDINATES

X	-.16374376 08	Y	-.12775439 08	Z	-.13410110 07	DX	-.54786110 01	DY	-.27682595 01	DZ	-.10034063 01
R	.20811784 08	DEC	-.36944237 01	RA	.21796168 03	V	.62197477 01	PTH	.77591202 02	AZ	.24268684 03
R	.20811783 08	LAT	-.36944228 01	LON	.16930468 03	VE	.15156652 04	PTE	.22963010 00	AZE	.26997681 03
XS	-.11178433 09	YS	-.89503142 08	ZS	-.38810621 08	DXS	.20083077 02	DYS	-.20488416 02	DZS	-.88854333 01
XM	.16354000 06	YM	-.31999600 06	ZM	-.13356650 06	DXM	.89676166 00	DYM	.47770333 00	DZM	.10968220 00
XT	-.24075596 08	YT	-.29725556 08	ZT	-.17432106 08	DXT	-.53175306 00	DYT	.47914903 01	DZT	.38026838 01
RS	.14836716 09	VS	.30034249 02	RM	.38338333 06	VM	.10219648 01	RT	.42037142 08	VT	.61401583 01
GED	-.37195291 01	ALT	.20805405 08	LOS	.17002645 03	RAS	.21868345 03	RAM	.29707016 03	LOM	.24841316 03
DUT	.35000000 02	DT	.17280000 06	DR	.60744502 01	SHA	-.41462520 07	DES	-.15164129 02	DEM	-.20388804 02
DAC	.00000000 00										
BOARD UNITS											
UE	.20000000 01	VE	.20000000 01	ALF	.80000000 02	S1	.50000000 05	S2	.10000000 05		
UP1	.21221708 03	VP1	.14991394 03	UM1	.12694300 01	VM1	.53411997 01	S	.41830977 02	M	.10418752 03
UP2	.10530854 04	VP2	.74156970 03	UM2	-.16528499 01	VM2	.18705999 02	GM	.23299795 03		

CASE 1 SPACE TRAJECTORIES 10

EARTH-VENUS,RADIATION PRES. ON CHECK 2

HELIOCENTRIC ECLIPTIC COORDINATES

X	.95409954 08	Y	.85301071 08	Z	.38521455 07	DX	-.25561688 02	DY	.19393227 02	DZ	.18180317 00
R	.12803972 09	LAT	.17240345 01	LON	.41798241 02	V	.32086293 02	PTH	-.10999599 02	AZ	.89333910 02
XE	.11178433 09	YE	.97555504 08	ZE	-.00000000 00	DXE	-.20083077 02	DYE	.22332176 02	DZE	.10869503-02
XT	.87708734 08	YT	.63348502 08	ZT	-.41674840 07	DXT	-.20614830 02	DYT	.28240997 02	DZT	.15836880 01
LTE	-.00000000 00	LOE	.41111588 02	LTT	-.22058719 01	LOT	.35839072 02	RST	.10827383 09	VST	.35000474 02
EPS	.16665258 03	ESP	.18557105 01	SEP	.11491712 02	EPM	.10380217 01	EMP	.10045175 03	MEP	.78510235 02
MPS	.16620532 03	MSP	.19113509 01	SMP	.11883327 02	SEM	.74141861 02	EMS	.10571562 03	ESM	.14248096 00
EPT	.13533253 03	ETP	.20367319 02	TEP	.24300151 02	TPS	.33140235 02	TSP	.71373171 01	STP	.13972244 03
SET	.14859407 02	STE	.15942644 03	EST	.57141569 01	RPM	.20738819 08	RPT	.24607694 08	SPN	.16663502 03
SAC	-.16625861-09										
GCE	.34323798 02	GCT	.69215735 02	SIP	.33125798 02	CPT	.82900659 02	SIN	.82886221 02	D1	.75586118-02
REP	.20811784 08	VEP	.62197477 01	CPE	.74275123 02	CPS	.94776846 02	D2	.57675674-02	D3	.22473993-05
PUBLIC INFORMATION											
X	.59284997 01	Y	.53003628 01	RPE	.12931843 08	RPT	.15290512 08	VGC	.13913179 05	V	.71774992 05

BRONSTEIN ANGLES REFERENCE BODY IS EARTH GHR .16665258 03

BODY 1 IS MOON	GHG	.16623754 03	GSL	.95143253 00	GCK	.39932381 01	ACK	.97954986 00
	GLG	.17395659 03	GLT	-.10691218 02	ALT	-.64286319 02	BLT	-.10744655 02
BODY 2 IS VENUS	GHG	.28170113 02	GSL	.18223431 02	GCK	.34891936 02	ACK	.20479385 02
	GLG	.28870286 02	GLT	-.19020065 02	ALT	-.33387623 02	BLT	-.21476540 02
BODY 3 IS EARTH	GHG	.16665258 03	GSL	-.21344341-06	GCK	-.38146973-05	ACK	-.21344341-06
	GLG	.17501260 03	GLT	-.10666640 02	ALT	-.68279556 02	BLT	-.10701340 02

95 DAYS 14 HRS. 20 MIN. 44.435 SEC. JULIAN DATE 2438008.11407910 DEC. 9,1962 14 44 16.435

GEOCENTRIC EQUATORIAL COORDINATES

X	-.38114998 08	Y	-.32470370 08	Z	-.10737409 08	DX	-.69861240 01	DY	-.11840024 02	DZ	-.59360274 01
R	.51209081 08	DEC	-.12103473 02	RA	.22042785 03	V	.14974262 02	PTH	.68705312 02	AZ	.12448572 03
R	.51209078 08	LAT	-.12103473 02	LON	.28149886 03	VE	.36467605 04	PTE	.21920553 00	AZE	.26995161 03
XS	-.33001200 08	YS	-.13173262 09	ZS	-.57122495 08	DXS	.29507907 02	DYS	-.60166231 01	DZS	-.26084354 01
XM	.21882275 06	YM	.27912200 06	ZM	.88072500 05	DXM	-.85080886 00	DYM	.59183830 00	DZM	.29571599 00
XT	-.38807370 08	YT	-.33876898 08	ZT	-.12684792 08	DXT	-.55834632 01	DYT	-.87148198 01	DZT	-.16057309 01
RS	.14732800 09	VS	.30227806 02	RM	.36544391 06	VM	.10777737 01	RT	.53052428 08	VT	.10473849 02
GED	-.12183500 02	ALT	.51202703 08	LOS	.31700691 03	RAS	.25593590 03	RAM	.51904682 02	LOM	.11297569 03
DUT	.35000000 02	DT	.17280000 06	DR	.13951893 02	SHA	-.29675556 08	DES	-.22812908 02	DEM	.13945651 02
DAC	.00000000 00										
BOARD UNITS											
UE	.20000000 01	VE	.20000000 01	ALF	.80000000 02	S1	.50000000 05	S2	.10000000 05		
UP1	.53287313 03	VP1	.35209945 03	UM1	-.13115400 01	VM1	-.10220777 01	S	.61813939 02	M	.23018442 03
UP2	.26563657 04	VP2	.17524973 04	UM2	-.14557700 02	VM2	-.13110389 02	GM	.11677763 03		

CASE 1 SPACE TRAJECTORIES 11

EARTH-VENUS,RADIATION PRES. ON CHECK 2

HELIOCENTRIC ECLIPTIC COORDINATES

X	-.51137983 07	Y	.10952243 09	Z	.30669445 07	DX	-.36494031 02	DY	-.66665481 01	DZ	-.73620754 00
R	.10968464 09	LAT	.16022821 01	LON	.92673302 02	V	.37105244 02	PTH	-.77065971 01	AZ	.90930777 02
XE	.33001200 08	YE	.14358433 09	ZE	.39800000 03	DXE	-.29507907 02	DYE	.65577197 01	DZE	-.45892596-03
XT	-.58061703 07	YT	.10745727 09	ZT	.18398585 07	DXT	-.35091370 02	DYT	-.20765797 01	DZT	.19933636 01
LTE	.15478197-03	LOE	.77056027 02	LTT	.97948071 00	LOT	.93092819 02	RST	.10762975 09	VST	.35209230 02
EPS	.12888756 03	ESP	.15697203 02	SEP	.35415237 02	EPM	.79129368-01	EMP	.11251070 02	MEP	.16866915 03
MPS	.12896563 03	MSP	.15755552 02	SMP	.35278815 02	SEM	.15557553 03	EMS	.24365830 02	ESM	.58516955-01
EPT	.13656875 03	ETP	.41574738 02	TEP	.18564881 01	TPS	.34345132 02	TSP	.75088787 00	STP	.14490401 03
SET	.34155401 02	STE	.12977871 03	EST	.16065882 02	RPM	.51567452 08	RPT	.24999996 07	SPN	.12888042 03
SAC	-.22655934-09										
GCE	.87217963 02	GCT	.32896739 03	SIP	.34203038 02	CPT	.72724510 02	SIN	.72582414 02	D1	.74400242-01
REP	.51209081 08	VEP	.14974262 02	CPE	.80194569 02	CPS	.10226697 03	D2	.60960260-01	D3	.26257474-03
PUBLIC INFORMATION											
X	-.31775669 00	Y	.68054085 01	RPE	.31819848 08	RPT	.15534277 07	VGC	.33496469 05	V	.83002066 05

BRONSTEIN ANGLES REFERENCE BODY IS EARTH GHR .12888756 03

BODY 1 IS MOON	GHG	.12896563 03	GSL	-.16423189-01	GCK	-.21121979-01	ACK	-.26114374-01
	GLG	.12919195 03	GLT	-.34428610 01	ALT	-.57328644 01	BLT	-.54362952 01
BODY 2 IS VENUS	GHG	-.17922737 02	GSL	-.29800087 02	GCK	-.61749423 02	ACK	-.31044452 02
	GLG	-.21207725 02	GLT	-.29395449 02	ALT	-.56037677 02	BLT	-.31130697 02
BODY 3 IS EARTH	GHG	.12888756 03	GSL	.53360853-07	GCK	-.38146973-05	ACK	.36685586-07
	GLG	.12911263 03	GLT	-.34330887 01	ALT	-.57117423 01	BLT	-.54300891 01

97 DAYS 14 HRS. 20 MIN. 44.435 SEC. JULIAN DATE 2438010.11407910 DEC. 11,1962 14 44 16.435

GEOCENTRIC EQUATORIAL COORDINATES

X	-.39292328 08	Y	-.34585270 08	Z	-.11798543 08	DX	-.66286103 01	DY	-.12640463 02	DZ	-.63478719 01
R	.53658489 08	DEC	-.12702109 02	RA	.22135437 03	V	.15620988 02	PTH	.67168016 02	AZ	.12255898 03
R	.53658488 08	LAT	-.12702110 02	LON	.28045403 03	VE	.38119972 04	PTE	.21639405 00	AZE	.26995096 03
XS	-.27882744 08	YS	-.13269097 09	ZS	-.57537875 08	DXS	.29723992 02	DYS	-.50733528 01	DZS	-.21989258 01
XM	.51516499 05	YM	.34426650 06	ZM	.12676950 06	DXM	-.10448259 01	DYM	.14994252 00	DZM	.14412564 00
XT	-.39740511 08	YT	-.35456770 08	ZT	-.12997658 08	DXT	-.52048025 01	DYT	-.95669186 01	DZT	-.20150640 01
RS	.14729205 09	VS	.30233919 02	RM	.37046440 06	VM	.10653244 01	RT	.54821800 08	VT	.11075937 02
GED	-.12785836 02	ALT	.53652111 08	LOS	.31723258 03	RAS	.25813292 03	RAM	.81489329 02	LOM	.14058899 03
DUT	.35000000 02	DT	.15360000 05	DR	.14397032 02	SHA	-.31822235 08	DES	-.22994205 02	DEM	.20010403 02
DAC	.00000000 00										
BOARD UNITS											
UE	.20000000 01	VE	.20000000 01	ALF	.80000000 02	S1	.50000000 05	S2	.10000000 05		
UP1	.55447204 03	VP1	.37360284 03	UM1	.29640387 00	VM1	-.16589722 01	S	.63237112 02	M	.24703871 03
UP2	.27643602 04	VP2	.18600142 04	UM2	-.65179805 01	VM2	-.16294861 02	GM	.11966500 03		

GEOCENTRIC CONIC

EPOCH OF PERICENTER PASSAGE JULIAN DATE 2437973.47926284 NOV. 4,1962 23 30 08.310

CASE 1 SPACE TRAJECTORIES 12

EARTH-VENUS,RADIATION PRES. ON CHECK 2

SMA	-.16336169 04	ECC	.12745791 05	B	.20821740 08	SLR	.26538954 12	APO	.00000000 00	RCA	.20820106 08		
VH	.15620512 02	C3	.24400041 03	C1	.32524624 09	TFP	.31652481 07	TF	.60962919 02	LTF	.60951477 02		
TA	.67172158 02	MTA	.90004494 02	EA	.91664936 02	MA	.17341052 07			TFI	.97597736 02		
ZAE	.15802806 03	ZAP	.31507251 02	ZAC	.97994936 02	DEF	.18504685-01	IR	.76613869 04	GP	-.35864939 01		

ALL VECTORS REFERENCED TO EARTH EQUATOR PLANE

X	-.39292328 08	Y	-.34585270 08	Z	-.11798543 08	DX	-.66286103 01	DY	-.12640463 02	DZ	-.63478719 01
INC	.34693286 02	LAN	.22352557 02	APF	.13555302 03	MX	.64570057 00	MY	-.55448120 00	MZ	-.52499673 00
WX	.21646310 00	WY	-.52641566 00	WZ	.82221072 00	PX	-.87921863 00	PY	.26099174 00	PZ	.39857000 00
QX	-.42440359 00	QY	-.80917855 00	QZ	-.40633932 00	RX	.18872226 00	RY	.35989021 00	RZ	-.91370831 00
BX	-.87925187 00	BY	.26092823 00	BZ	.39853809 00	TX	-.88562071 00	TY	.46440926 00	TZ	.00000000 00
SXI	-.42447257 00	SYI	-.80915806 00	SZI	-.40630805 00	DAI	-.23973122 02	RAI	.24231915 03		
SXO	-.42433461 00	SYO	-.80919902 00	SZO	-.40637059 00	DAO	-.23977045 02	RAO	.24232800 03		
ETE	.33587999 03	ETS	.35187209 03	ETC	.25026982 03						
B.T	.18736105 08	B.R	-.90831296 07	B	.20821740 08	THA	.33413622 03				

HELIOCENTRIC ECLIPTIC COORDINATES

X	-.11409584 08	Y	.10820445 09	Z	.29346365 07	DX	-.36352602 02	DY	-.85930894 01	DZ	-.79606962 00
R	.10884389 09	LAT	.15449879 01	LON	.96019290 02	V	.37362904 02	PTH	-.73091185 01	AZ	.91033055 02
XE	.27882744 08	YE	.14462883 09	ZE	.28000000 03	DXE	-.29723992 02	DYE	.55293926 01	DZE	-.90438127-03
XT	-.11857767 08	YT	.10692784 09	ZT	.21812060 07	DXT	-.34928795 02	DYT	-.40495182 01	DZT	.19563588 01
LTE	.10891843-03	LOE	.79087919 02	LTT	.11614882 01	LOT	.96327960 02	RST	.10760542 09	VST	.35217135 02
EPS	.12662651 03	ESP	.16999649 02	SEP	.36373837 02	EPM	.24806948 00	EMP	.38852928 02	MEP	.14089891 03
MPS	.12687353 03	MSP	.16993148 02	SMP	.36133324 02	SEM	.17568127 03	EMS	.43079123 01	ESM	.98911702-02
EPT	.13815044 03	ETP	.40769654 02	TEP	.10798763 01	TPS	.36651182 02	TSP	.49232948 00	STP	.14285658 03
SET	.35659844 02	STE	.12706222 03	EST	.17277930 02	RPM	.53946488 08	RPT	.15486305 07	SPN	.12661970 03
SAC	-.23007291-09										
GCE	.87044404 02	GCT	.32327975 03	SIP	.36421797 02	CPT	.72905695 02	SIN	.72676307 02	D1	.12010708 00
REP	.53658489 08	VEP	.15620988 02	CPE	.80256470 02	CPS	.10247117 03	D2	.95971771-01	D3	.63480634-03
PUBLIC INFORMATION											
X	-.70895869 00	Y	.67235125 01	RPE	.33341840 08	RPT	.96227439 06	VGC	.34943154 05	V	.83578435 05

HELIOCENTRIC CONIC

EPOCH OF PERICENTER PASSAGE JULIAN DATE 2438037.00635232 JAN. 7,1963 12 09 08.841

SMA	.12728646 09	ECC	.19193477 00	B	.12491989 09	SLR	.12259736 09	APO	.15171715 09	RCA	.10285576 09
VH	.26586832 02	C3	-.10426517 04	C1	.40336785 10	TFP	-.23234924 07	TF	.12449001 03	PER	.28666765 03
TA	-.48826119 02	MTA	.00000000 00	EA	-.40983966 02	MA	-.33771575 02			TFI	.97597736 02

ALL VECTORS REFERENCED TO ECLIPTIC PLANE

X	-.11409584 08	Y	.10820445 09	Z	.29346365 07	DX	-.36352602 02	DY	-.85930894 01	DZ	-.79606962 00
INC	.18584899 01	LAN	.33224454 03	APF	.17258691 03	MX	-.91292936 00	MY	-.98423350-01	MZ	-.16621422-01
WX	-.15103007-01	WY	-.28699484-01	WZ	.99947397 00	PX	-.81749290 00	PY	.57592291 00	PZ	.41842905-02
QX	-.57574007 00	QY	-.81699968 00	QZ	-.32159793-01	RX	-.34206588-02	RY	.24098506-02	RZ	-.99999093 00
BX	.57574026 00	BY	.81699995 00	BZ	.32159803-01	TX	.57592814 00	TY	.81750032 00	TZ	.00000000 00
DAP	.23974305 00	RAP	.14483534 03								
B.T	.12485524 09	B.R	-.40174320 07	B	.12491986 09	THA	.35815704 03				

EARTH-VENUS,RADIATION PRES. ON CHECK 2

BRONSTEIN ANGLES REFERENCE BODY IS EARTH GHR .12662651 03

BODY 1 IS MOON	GHG	.12687353 03	GSL	-.23680265-01	GCK	-.29605865-01	ACK	-.39463978-01
	GLG	.12706001 03	GLT	-.31400445 01	ALT	-.50905761 01	BLT	-.51993781 01
BODY 2 IS VENUS	GHG	-.22466648 02	GSL	-.29752485 02	GCK	-.56235339 02	ACK	-.31738916 02
	GLG	-.25364082 02	GLT	-.29111719 02	ALT	-.51174362 02	BLT	-.31631297 02
BODY 3 IS EARTH	GHG	.12662651 03	GSL	.53360853-07	GCK	.25613208-05	ACK	.21344341-06
	GLG	.12681154 03	GLT	-.31348280 01	ALT	-.50609741 01	BLT	-.52206337 01

APHRODIOCENTRIC ECLIPTIC COORDINATES

X	.44818284 06	Y	.12766092 07	Z	.75343056 06	DX	-.14238078 01	DY	-.45435712 01	DZ	-.27524284 01
R	.15486305 07	DEC	.29111719 02	RA	.70655207 02	V	.54997391 01	PTH	-.88074481 02	AZ	.24101341 03
ALT	.15424305 07	SHA	.93508215 06	ALP	.44164316 02	DR	-.54966337 01	DP	.68369160-05	ASD	.22938678 00
HGE	.23337348 03	SVL	.29752485 02	HNG	.22466646 02	SIA	.13792106 03				
SAC	-.23007291-09										

APHRODIOCENTRIC CONIC

EPOCH OF PERICENTER PASSAGE JULIAN DATE 2438013.32330111 DEC. 14,1962 19 45 33.216

SMA	-.10888184 05	ECC	.49152434 01	B	.52399039 05	SLR	.25216617 06	APO	.00000000 00	RCA	.42629889 05
VH	.54614744 01	C3	.29827702 02	C1	.28617457 06	TFP	-.27727678 06	TF	.10080696 03	LTF	.10077021 03
TA	-.99806483 02	MTA	.10173870 03	EA	-.23290537 03	MA	-.79687572 04			TFI	.97597736 02
ZAE	.13737663 03	ZAP	.36623348 02	ZAC	.72228536 02	DEF	.23477396 02	IR	.13170174 05	GP	-.30196771 02

ALL VECTORS REFERENCED TO ECLIPTIC PLANE

X	.44818284 06	Y	.12766092 07	Z	.75343056 06	DX	-.14238078 01	DY	-.45435712 01	DZ	-.27524284 01
INC	.13983763 03	LAN	.20936625 03	APF	.23083702 03	MX	.86527689 00	MY	.23719897-01	MZ	-.34064642 00
WX	-.31626963 00	WY	.56206172 00	WZ	-.76421984 00	PX	.84094311 00	PY	-.20671687 00	PZ	-.50005551 00
QX	-.43904705 00	QY	-.80084063 00	QZ	-.40729726 00	RX	.14961081 00	RY	.47762940 00	RZ	-.86572900 00
BX	.91269071 00	BY	-.39467222-01	BZ	-.40674068 00	TX	-.95427976 00	TY	.29891494 00	TZ	.00000000 00
SXI	-.25877934 00	SYI	-.82614766 00	SZI	-.50051298 00	DAI	-.30033944 02	RAI	.25260755 03		
SXO	-.60095064 00	SYO	-.74203664 00	SZO	-.29704541 00	DAO	-.17280229 02	RAO	.23099714 03		
ETE	.31588768 03	ETS	.47608476 02	ETC	.26220581 03						
B.T	-.46255759 05	B.R	.24618374 05	B	.52399042 05	THA	.15197707 03				

99 DAYS 10 HRS. 4 MIN. 44.435 SEC. JULIAN DATE 2438011.93630132 DEC. 13,1962 10 28 16.435

RECTIFICATION .15200025-01 -.50814008 04 .17621880 05 .26103783 04

99 DAYS 14 HRS. 20 MIN. 44.435 SEC. JULIAN DATE 2438012.11407910 DEC. 13,1962 14 44 16.435

CASE 1 SPACE TRAJECTORIES 14

EARTH-VENUS,RADIATION PRES. ON CHECK 2

GEOCENTRIC EQUATORIAL COORDINATES

X	-.40401588 08	Y	-.36840867 08	Z	-.12933124 08	DX	-.62033731 01	DY	-.13476443 02	DZ	-.67975516 01
R	.56185438 08	DEC	-.13308046 02	RA	.22236065 03	V	.16318795 02	PTH	.65605617 02	AZ	.12098417 03
R	.56185436 08	LAT	-.13308047 02	LON	.27948895 03	VE	.39813362 04	PTE	.21388140 00	AZE	.26995005 03
XS	-.22729810 08	YS	-.13348572 09	ZS	-.57882300 08	DXS	.29906327 02	DYS	-.41232297 01	DZS	-.17866902 01
XM	-.12795200 06	YM	.33046400 06	ZM	.13650737 06	DXM	-.99310169 00	DYM	-.30108845 00	DZM	-.31431913-01
XT	-.40601496 08	YT	-.37182260 08	ZT	-.13381174 08	DXT	-.47486778 01	DYT	-.10399052 02	DZT	-.24227948 01
RS	.14725977 09	VS	.30242051 02	RM	.37975312 06	VM	.10382163 01	RT	.56657372 08	VT	.11685895 02
GED	-.13395480 02	ALT	.56179060 08	LOS	.31746471 03	RAS	.26033641 03	RAM	.11116585 03	LOM	.16829415 03
DUT	.35000000 02	DT	.19200000 04	DR	.14861921 02	SHA	-.34020814 08	DES	-.23145194 02	DEM	.21067249 02
DAC	.00000000 00										
BOARD UNITS											
UE	.20000000 01	VE	.20000000 01	ALF	.80000000 02	S1	.50000000 05	S2	.10000000 05		
UP1	.57586584 03	VP1	.39652365 03	UM1	.22984070 01	VM1	-.14563937 01	S	.64716523 02	M	.27541865 03
UP2	.28713292 04	VP2	.19746183 04	UM2	.34920348 01	VM2	-.15281968 02	GM	.12261636 03		

HELIOCENTRIC ECLIPTIC COORDINATES

X	-.17671778 08	Y	.10654983 09	Z	.27908700 07	DX	-.36109700 02	DY	-.10574662 02	DZ	-.87627727 00
R	.10804141 09	LAT	.14801984 01	LON	.99417047 02	V	.37636441 02	PTH	-.69360485 01	AZ	.91164253 02
XE	.22729810 08	YE	.14549500 09	ZE	.10150000 03	DXE	-.29906327 02	DYE	.44936937 01	DZE	-.11267960-02
XT	-.17871687 08	YT	.10605837 09	ZT	.25156185 07	DXT	-.34655004 02	DYT	-.60108728 01	DZT	.19131070 01
LTE	.39491582-04	LOE	.81120791 02	LTT	.13398714 01	LOT	.99564944 02	RST	.10758300 09	VST	.35224421 02
EPS	.12438050 03	ESP	.18353981 02	SEP	.37265512 02	EPM	.35207620 00	EMP	.65376624 02	MEP	.11427133 03
MPS	.12473189 03	MSP	.18283924 02	SMP	.36984185 02	SEM	.15141366 03	EMS	.28515804 02	ESM	.70637088-01
EPT	.14195825 03	ETP	.37669262 02	TEP	.37233457 00	TPS	.39818652 02	TSP	.20391181 00	STP	.13997750 03
SET	.37029645 02	STE	.12447929 03	EST	.18491058 02	RPM	.56342603 08	RPT	.59771330 06	SPN	.12437400 03
SAC	-.23350334-09										
GCE	.86792903 02	GCT	.31476226 03	SIP	.39224320 02	CPT	.74217772 02	SIN	.73623440 02	D1	.31120272 00
REP	.56185438 08	VEP	.16318795 02	CPE	.80294767 02	CPS	.10263569 03	D2	.23990404 00	D3	.38441970-02
PUBLIC INFORMATION											
X	-.10980734 01	Y	.66206994 01	RPE	.34912013 08	RPT	.37140183 06	VGC	.36504104 05	V	.84190320 05

BRONSTEIN ANGLES REFERENCE BODY IS EARTH GHR .12438050 03

BODY 1 IS MOON			GHG	.12473189 03	GSL	-.21462161-01	GCK	-.26119232-01	ACK	-.37670200-01
			GLG	.12488388 03	GLT	-.28454832 01	ALT	-.44931106 01	BLT	-.49653135 01
BODY 2 IS VENUS			GHG	-.29170208 02	GSL	-.28401735 02	GCK	-.47969354 02	ACK	-.31768959 02
			GLG	-.31551750 02	GLT	-.27419840 02	ALT	-.43502361 02	BLT	-.31320941 02
BODY 3 IS EARTH			GHG	.12438050 03	GSL	-.80041277-07	GCK	.25613208-05	ACK	.40020639-07
			GLG	.12453141 03	GLT	-.28470900 01	ALT	-.44669952 01	BLT	-.50122053 01

```
CASE  1                                          SPACE TRAJECTORIES                                                    15

EARTH-VENUS,RADIATION PRES. ON                          CHECK 2

   APHRODIOCENTRIC                                                                                  ECLIPTIC COORDINATES

    X  .19990869 06     Y  .49146154 06     Z  .27525126 06    DX -.14546954 01    DY -.45637891 01    DZ -.27893843 01
    R  .59771329 06   DEC  .27419840 02    RA  .67865291 02     V  .55430113 01   PTH -.85200547 02    AZ  .23334985 03
  ALT  .59151330 06   SHA  .38438248 06   ALP  .35226823 02    DR -.55235756 01    DP  .44456598-04   ASD  .59433232 00
  HGE  .23561949 03   SVL  .28401735 02   HNG  .29170208 02   SIA  .14136392 03
  SAC -.23350334-09

                                                  APHRODIOCENTRIC CONIC

EPOCH OF PERICENTER PASSAGE                          JULIAN DATE 2438013.32998101              DEC. 14,1962   19 55 10.359
  SMA -.10957776 05   ECC  .47531509 01     B  .50918195 05   SLR  .23660516 06   APO  .00000000 00   RCA  .41126186 05
   VH  .54441040 01    C3  .29638268 02    C1  .27720414 06   TFP -.10505392 06    TF  .10081364 03   LTF  .10077732 03
   TA -.97302344 02   MTA  .10214502 03    EA -.18046637 03    MA -.29904664 04                       TFI  .99597736 02
  ZAE  .13758812 03   ZAP  .38744408 02   ZAC  .71997309 02   DEF  .24290048 02    IR  .13202894 05    GP -.30415008 02

                                                                ALL VECTORS REFERENCED TO ECLIPTIC PLANE
    X  .19990869 06     Y  .49146154 06     Z  .27525126 06    DX -.14546954 01    DY -.45637891 01    DZ -.27893843 01
  INC  .13541113 03   LAN  .21611021 03   APF  .23630839 03    MX  .83189950 00    MY  .71944659-01    MZ -.42599139 00
   WX -.41372584 00    WY  .56714718 00    WZ -.71216254 00    PX  .79736239 00    PY -.15178708 00    PZ -.58410124 00
   QX -.43936840 00    QY -.80950905 00    QZ -.38942334 00    RX  .15259271 00    RY  .47991978 00    RZ -.86394006 00
   BX  .87195318 00    BY  .21920311-01    BZ -.48909832 00    TX -.95298832 00    TY  .30300703 00    TZ  .00000000 00
  SXI -.26177992 00   SYI -.82332479 00   SZI -.50359461 00   DAI -.30238104 02   RAI  .25236169 03
  SXO -.59728917 00   SYO -.75945675 00   SZO -.25782007 00   DAO -.14940752 02   RAO  .23181604 03
  ETE  .31441475 03   ETS  .43092875 02   ETC  .26214136 03
  B.T -.41972847 05   B.R  .28826080 05     B  .50918197 05   THA  .14551952 03

 100 DAYS 18 HRS. 26 MIN. 27.203 SEC.                JULIAN DATE 2438013.28471299              DEC. 14,1962   18 49 59.203
 RADIOMETER FIRST
  SIA  .14454356 03   SIP  .74992407 02   SIN  .99290083 02   SPT  .82483647 02   ASD  .74912395 01
  RPT  .47555281 05   LON  .21753407 03     V  .65778777 01
  PUL  .12259170 02   PDL  .12259170 02   ACR  .00000000 00   ZIP -.10010844 05

JETGOLD-2              1   UNIFORM TIME    TAU .00000000 00
   R        .57717528 08          LAT      -.13673911 02          LONG      .21753407 03
   MIN     .14510645 06  HA      .25619981 02  DEC    -.13678558 02  ELE     .35416982 02  AZI     .21103306 03
   CKM     .17997373 03  CKC     .27337052 03  CKT     .34773470 03  PSS     .37753649 02  PSM     .99956051 02
   UT      .24184408 04  DHA     .41722091-02  DDE    -.36703959-05  DEL    -.17607825-02  DAZ     .44806278-02
   ET      .24184311 04  RGE     .57713835 08  DRG     .16484399 02  DDR     .00000000 00  SLS     .24731966 03
   RDI     .63720326 04  PHI     .35205980 02  THI     .24315175 03  SPS     .56929862 02  POL     .27164990 03
   DT      .19251261 03  RF1     .00000000 00  RF2     .00000000 00  BF1     .97199059 05
   ESS1   -.15741966 03  ESS2   -.18101967 03  F1      .15271604 06  F2      .20557867 06  PRA     .22298553 03

 100 DAYS 18 HRS. 26 MIN. 27.203 SEC.                JULIAN DATE 2438013.28471299              DEC. 14,1962   18 49 59.203
```

CASE 1 SPACE TRAJECTORIES 16

EARTH-VENUS,RADIATION PRES. ON CHECK 2

GEOCENTRIC EQUATORIAL COORDINATES

X	-.41023631 08	Y	-.38238871 08	Z	-.13644179 08	DX	-.68099375 01	DY	-.14661982 02	DZ	-.74904571 01
R	.57717528 08	DEC	-.13673911 02	RA	.22298783 03	V	.17817292 02	PTH	.66381510 02	AZ	.12157029 03
R	.57717528 08	LAT	-.13673911 02	LON	.21753407 03	VE	.40834894 04	PTE	.22905637 00	AZE	.26994755 03
XS	-.19700113 08	YS	-.13387450 09	ZS	-.58050786 08	DXS	.29997089 02	DYS	-.35638941 01	DZS	-.15441361 01
XM	-.22239400 06	YM	.28832200 06	ZM	.12838812 06	DXM	-.86393949 00	DYM	-.52529371 00	DZM	-.12736222 00
XT	-.41066664 08	YT	-.38258220 08	ZT	-.13638243 08	DXT	-.44463461 01	DYT	-.10874490 02	DZT	-.26596375 01
RS	.14724255 09	VS	.30247497 02	RM	.38609866 06	VM	.10190908 01	RT	.57759535 08	VT	.12045672 02
GED	-.13763564 02	ALT	.57711151 08	LOS	.25617502 03	RAS	.26162879 03	RAM	.12764440 03	LOM	.12219064 03
DUT	.35000000 02	DT	.48000000 03	DR	.16324800 02	SHA	-.35337611 08	DES	-.23219380 02	DEM	.19422209 02
DAC	.00000000 00										
BOARD UNITS											
UE	.20000000 01	VE	.20000000 01	ALF	.80000000 02	S1	.50000000 05	S2	.10000000 05		
UP1	.58842371 03	VP1	.41070081 03	UM1	.34674534 01	VM1	-.98060694 00	S	.65610629 02	M	.30255062 03
UP2	.29341186 04	VP2	.20455040 04	UM2	.93372671 01	VM2	-.12903035 02	GM	.20361328 03		

HELIOCENTRIC ECLIPTIC COORDINATES

X	-.21323518 08	Y	.10540806 09	Z	.26945660 07	DX	-.36807027 02	DY	-.12547666 02	DZ	-.10403591 01
R	.10757701 09	LAT	.14352823 01	LON	.10143631 03	V	.38900944 02	PTH	-.74218619 01	AZ	.91358858 02
XE	.19700113 08	YE	.14591873 09	ZE	-.12500000 02	DXE	-.29997089 02	DYE	.38840309 01	DZE	-.11407733-02
XT	-.21366552 08	YT	.10539267 09	ZT	.27077095 07	DXT	-.34443435 02	DYT	-.71509540 01	DZT	.18849448 01
LTE	-.48640642-05	LOE	.82311130 02	LTT	.14423677 01	LOT	.10146041 03	RST	.10757079 09	VST	.35228389 02
EPS	.12307061 03	ESP	.19176947 02	SEP	.37752439 02	EPM	.37761805 00	EMP	.80186398 02	MEP	.99435927 02
MPS	.12344791 03	MSP	.19075158 02	SMP	.37476932 02	SEM	.13713796 03	EMS	.42760034 02	ESM	.10207574 00
EPT	.15203480 03	ETP	.27943076 02	TEP	.22117329-01	TPS	.82483647 02	TSP	.25217635-01	STP	.97491241 02
SET	.37772207 02	STE	.12302630 03	EST	.19201487 02	RPM	.57782082 08	RPT	.47555280 05	SPN	.12306428 03
SAC	-.23552374-09										
GCE	.86623352 02	GCT	.25436418 03	SIP	.74992406 02	CPT	.10682479 03	SIN	.99333546 02	D1	.39449081 01
REP	.57717528 08	VEP	.17817292 02	CPE	.80313296 02	CPS	.10271609 03	D2	.58562498 00	D3	.68213167-01
PUBLIC INFORMATION											
X	-.13249820 01	Y	.65497532 01	RPE	.35864010 08	RPT	.29549481 05	VGC	.39856147 05	V	.87018932 05

BRONSTEIN ANGLES REFERENCE BODY IS EARTH GHR .12307061 03

BODY 1 IS MOON		GHG	.12344791 03	GSL	-.16805680-01	GCK	-.20141602-01	ACK	-.30489110-01		
		GLG	.12358126 03	GLT	-.26698031 01	ALT	-.41515121 01	BLT	-.48174015 01		
BODY 2 IS VENUS		GHG	-.82310329 02	GSL	.12152219 02	GCK	.12259174 02	ACK	.58143482 02		
		GLG	-.81757671 02	GLT	.16045116 02	ALT	.16390545 02	BLT	.63468878 02		
BODY 3 IS EARTH		GHG	.12307061 03	GSL	-.21344341-06	GCK	-.38146973-05	ACK	-.28681458-06		
		GLG	.12320322 03	GLT	-.26758598 01	ALT	-.41313705 01	BLT	-.48766329 01		

EARTH-VENUS,RADIATION PRES. ON CHECK 2

APHRODIOCENTRIC ECLIPTIC COORDINATES

X	.43033518 05	Y	.15390131 05	Z	-.13144005 05	DX	-.23635915 01	DY	-.53967124 01	DZ	-.29253039 01
R	.47555280 05	DEC	-.16045116 02	RA	.19678639 02	V	.65778775 01	PTH	-.27888627 02	AZ	.22748733 03
ALT	.41355280 05	SHA	.47149386 05	ALP	.36829601 01	DR	-.30768310 01	DP	.70047462-02	ASD	.74912404 01
HGE	.23692938 03	SVL	-.12152219 02	HNG	.82310326 02	SIA	.14454356 03				
SAC	-.23552374-09										
PUL	.12259170 02	PDL	.12259170 02	ACR	.00000000 00	ZIP	-.10010844 05				

APHRODIOCENTRIC CONIC

EPOCH OF PERICENTER PASSAGE JULIAN DATE 2438013.33032096 DEC. 14,1962 19 55 39.732

SMA	-.10968287 05	ECC	.47391501 01	B	.50809983 05	SLR	.23537445 06	APD	.00000000 00	RCA	.41012073 05
VH	.54414946 01	C3	.29609864 02	C1	.27648226 06	TFP	-.39405282 04	TF	.10081398 03	LTF	.10077768 03
TA	-.33552949 02	MTA	.10218145 03	EA	-.28455042 02	MA	-.11200991 03			TFI	.10076837 03
ZAE	.13775396 03	ZAP	.39935790 02	ZAC	.71961740 02	DEF	.24362903 02	IR	.13207829 05	GP	-.30447983 02

ALL VECTORS REFERENCED TO ECLIPTIC PLANE

X	.43033518 05	Y	.15390131 05	Z	-.13144005 05	DX	-.23635915 01	DY	-.53967124 01	DZ	-.29253039 01
INC	.13510591 03	LAN	.21645655 03	APF	.23660733 03	MX	.21736830 00	MY	-.69340779 00	MZ	-.68434147 00
WX	-.41939481 00	WY	.56767901 00	WZ	-.70841269 00	PX	.79412708 00	PY	-.14868192 00	PZ	-.58928416 00
QX	-.43985240 00	QY	-.80971240 00	QZ	-.38845284 00	RX	.15312885 00	RY	.48022739 00	RZ	-.86367418 00
BX	.86905926 00	BY	.25521808-01	BZ	-.49404924 00	TX	-.95273687 00	TY	.30379672 00	TZ	.00000000 00
SXI	-.26238139 00	SYI	-.82285425 00	SZI	-.50405039 00	DAI	-.30268336 02	RAI	.25231421 03		
SXO	-.59751621 00	SYO	-.76010802 00	SZO	-.25536269 00	DAO	-.14795077 02	RAO	.23182933 03		
ETE	.31366992 03	ETS	.40670266 02	ETC	.26212929 03						
B.T	-.41675940 05	B.R	.29064930 05	B	.50809982 05	THA	.14510796 03				

100 DAYS 18 HRS. 47 MIN. 29.001 SEC. JULIAN DATE 2438013.29931714 DEC. 14,1962 19 11 01.002

RADIOMETER TERMINATOR

SIA	.13470749 03	SIP	.81906503 02	SIN	.10295129 03	SPT	.89976472 02	ASD	.80699691 01
RPT	.44165120 05	LON	.21226998 03	V	.66570972 01				
PUL	.26305421 02	PDL	.10165553 02	ACR	.80699341 01	ZIP	-.13820292 05		

JETGOLD-2 1 UNIFORM TIME TAU .00000000 00

R	.57738231 08	LAT	-.13678546 02	LONG	.21226998 03						
MIN	.14512748 06	HA	.30884498 02	DEC	-.13683136 02	ELE	.33021051 02	AZI	.21649995 03		
CKM	.17997371 03	CKC	.27337263 03	CKT	.34175827 03	PSS	.37759968 02	PSM	.99732158 02		
UT	.24187913 04	DHA	.41722587-02	DDE	-.35833307-05	DEL	-.20309038-02	DAZ	.41843249-02		
ET	.24187816 04	RGE	.57734758 08	DRG	.16681931 02	DDR	.00000000 00	SLS	.24732281 03		
RDI	.63720326 04	PHI	.35205980 02	THI	.24315175 03	SPS	.56947422 02	POL	.27237231 03		
DT	.19258240 03	RF1	.00000000 00	RF2	.00000000 00	BF1	.96566421 05				
ESS1	-.15742281 03	ESS2	-.18102282 03	F1	.15333272 06	F2	.20684382 06	PRA	.22299290 03		

100 DAYS 18 HRS. 47 MIN. 29.001 SEC. JULIAN DATE 2438013.29931714 DEC. 14,1962 19 11 01.002

CASE 1 SPACE TRAJECTORIES 18

EARTH-VENUS,RADIATION PRES. ON CHECK 2

GEOCENTRIC EQUATORIAL COORDINATES

X	-.41032330 08	Y	-.38257420 08	Z	-.13653611 08	DX	-.69835904 01	DY	-.14740064 02	DZ	-.74544540 01
R	.57738232 08	DEC	-.13678546 02	RA	.22299563 03	V	.17933458 02	PTH	.66875244 02	AZ	.12129168 03
R	.57738231 08	LAT	-.13678546 02	LON	.21226998 03	VE	.40849397 04	PTE	.23132741 00	AZE	.26994868 03
XS	-.19662261 08	YS	-.13387899 09	ZS	-.58052732 08	DXS	.29998146 02	DYS	-.35569017 01	DZS	-.15411045 01
XM	-.22348300 06	YM	.28765800 06	ZM	.12822662 06	DXM	-.86195043 00	DYM	-.52781510 00	DZM	-.12848607 00
XT	-.41072272 08	YT	-.38271945 08	ZT	-.13641600 08	DXT	-.44424126 01	DYT	-.10880361 02	DZT	-.26625808 01
RS	.14724234 09	VS	.30247566 02	RM	.38617850 06	VM	.10188503 01	RT	.57773406 08	VT	.12050171 02
GED	-.13768226 02	ALT	.57731855 08	LOS	.25091927 03	RAS	.26164492 03	RAM	.12784382 03	LOM	.11711817 03
DUT	.35000000 02	DT	.48000000 03	DR	.16492539 02	SHA	-.35355138 08	DES	-.23220239 02	DEM	.19392627 02
DAC	.00000000 00										
BOARD UNITS											
UE	.20000000 01	VE	.20000000 01	ALF	.80000000 02	S1	.50000000 05	S2	.10000000 05		
UP1	.58859538 03	VP1	.41088895 03	UM1	.34815247 01	VM1	-.97323686 00	S	.65621920 02	M	.30293279 03
UP2	.29349769 04	VP2	.20464448 04	UM2	.94076236 01	VM2	-.12866184 02	GM	.20778405 03		

HELIOCENTRIC ECLIPTIC COORDINATES

X	-.21370069 08	Y	.10539218 09	Z	.26932905 07	DX	-.36981736 02	DY	-.12612602 02	DZ	-.97626388 00
R	.10757066 09	LAT	.14346872 01	LON	.10146230 03	V	.39085542 02	PTH	-.74011169 01	AZ	.91257288 02
XE	.19662261 08	YE	.14592362 09	ZE	-.14000000 02	DXE	-.29998146 02	DYE	.38764095 01	DZE	-.11403262-02
XT	-.21410011 08	YT	.10538364 09	ZT	.27100880 07	DXT	-.34440558 02	DYT	-.71651325 01	DZT	.18845804 01
LTE	-.54477595-05	LOE	.82325983 02	LTT	.14436364 01	LOT	.10148406 03	RST	.10757065 09	VST	.35228437 02
EPS	.12305346 03	ESP	.19188006 02	SEP	.37758529 02	EPM	.37781231 00	EMP	.80367853 02	MEP	.99254327 02
MPS	.12343091 03	MSP	.19085858 02	SMP	.37483228 02	SEM	.13696304 03	EMS	.42934597 02	ESM	.10207574 00
EPT	.14277746 03	ETP	.37196041 02	TEP	.27088086-01	TPS	.89976472 02	TSP	.23196850-01	STP	.90000000 02
SET	.37781205 02	STE	.12300844 03	EST	.19210352 02	RPM	.57801592 08	RPT	.44165118 05	SPN	.12304713 03
SAC	-.23555155-09										
GCE	.86621126 02	GCT	.24838563 03	SIP	.81906503 02	CPT	.11106408 03	SIN	.10299411 03	D1	.42535901 01
REP	.57738232 08	VEP	.17933458 02	CPE	.80313624 02	CPS	.10271703 03	D2	.77864775-07	D3	.95852374-08
PUBLIC INFORMATION											
X	-.13278745 01	Y	.65487668 01	RPE	.35876874 08	RPT	.27442932 05	VGC	.40116002 05	V	.87431867 05

BRONSTEIN ANGLES REFERENCE BODY IS EARTH GHR .12305346 03

BODY 1 IS MOON		GHG	.12343091 03	GSL	-.16733963-01	GCK	-.20053863-01	ACK	-.30374705-01		
		GLG	.12356403 03	GLT	-.26675218 01	ALT	-.41471367 01	BLT	-.48154720 01		
BODY 2 IS VENUS		GHG	-.89975231 02	GSL	.18235486 02	GCK	.18235493 02	ACK	.89924669 02		
		GLG	-.89384418 02	GLT	.22354546 02	ALT	.22362579 02	BLT	.87926936 02		
BODY 3 IS EARTH		GHG	.12305346 03	GSL	.16008255-06	GCK	.25613208-05	ACK	.49358788-06		
		GLG	.12318584 03	GLT	-.26736348 01	ALT	-.41270866 01	BLT	-.48748400 01		

CASE 1 SPACE TRAJECTORIES 19

EARTH-VENUS,RADIATION PRES. ON CHECK 2

APHRODIOCENTRIC ECLIPTIC COORDINATES

X	.39941860 05	Y	.85466656 04	Z	-.16797619 05	DX	-.25411778 01	DY	-.54474697 01	DZ	-.28608442 01
R	.44165118 05	DEC	-.22354545 02	RA	.12077880 02	V	.66570970 01	PTH	-.19884705 02	AZ	.22999401 03
ALT	.37965118 05	SHA	-.44165118 05	ALP	.15609740 01	DR	-.22642687 01	DP	.81214020-02	ASD	.80699691 01
HGE	.23694653 03	SVL	-.18235486 02	HNG	.89975228 02	SIA	.13470749 03				
SAC	-.23555155-09										
PUL	.26305421 02	PDL	.10165553 02	ACR	.80699341 01	ZIP	-.13820292 05				

APHRODIOCENTRIC CONIC

EPOCH OF PERICENTER PASSAGE JULIAN DATE 2438013.33032104 DEC. 14,1962 19 55 39.738

SMA	-.10968281 05	ECC	.47391506 01	B	.50809957 05	SLR	.23537435 06	APO	.00000000 00	RCA	.41012053 05
VH	.54414963 01	C3	.29609882 02	C1	.27648221 06	TFP	-.26787366 04	TF	.10081398 03	LTF	.10077768 03
TA	-.24000366 02	MTA	.10218145 03	EA	-.19856981 02	MA	-.76143427 02			TFI	.10078297 03
ZAE	.13775617 03	ZAP	.39950352 02	ZAC	.71961761 02	DEF	.24362901 02	IR	.13207826 05	GP	-.30447958 02

ALL VECTORS REFERENCED TO ECLIPTIC PLANE

X	.39941860 05	Y	.85466656 04	Z	-.16797619 05	DX	-.25411778 01	DY	-.54474697 01	DZ	-.28608442 01
INC	.13510590 03	LAN	.21645655 03	APF	.23660739 03	MX	.78578898-01	MY	-.75472850 00	MZ	-.65131422 00
WX	-.41939481 00	WY	.56767912 00	WZ	-.70841258 00	PX	.79412658 00	PY	-.14868272 00	PZ	-.58928463 00
QX	-.43985332 00	QY	-.80971218 00	QZ	-.38845232 00	RX	.15312928 00	RY	.48022681 00	RZ	-.86367445 00
BX	.86905896 00	BY	.25520951-01	BZ	-.49404981 00	TX	-.95273652 00	TY	.30379781 00	TZ	.00000000 00
SXI	-.26238241 00	SYI	-.82285421 00	SZI	-.50404996 00	DAI	-.30268307 02	RAI	.25231414 03		
SXO	-.59751698 00	SYO	-.76010763 00	SZO	-.25536209 00	DAO	-.14795042 02	RAO	.23182927 03		
ETE	.31366127 03	ETS	.40641054 02	ETC	.26212927 03						
B.T	-.41675902 05	B.R	.29064942 05	B	.50809957 05	THA	.14510792 03				

100 DAYS 19 HRS. 8 MIN. 31.767 SEC. JULIAN DATE 2438013.31393248 DEC. 14,1962 19 32 03.768

RADIOMETER LAST

SIA	.12362249 03	SIP	.89977914 02	SIN	.10671464 03	SPT	.98483483 02	ASD	.85055679 01
RPT	.41918659 05	LON	.20700176 03	V	.67160358 01				
PUL	.25656355 02	PDL	.24426836 02	ACR	.61475971 00	ZIP	-.17549028 05		

JETGOLD-2 1 UNIFORM TIME TAU .00000000 00

R	.57759164 08	LAT	-.13683059 02	LONG	.20700176 03						
MIN	.14514853 06	HA	.36153122 02	DEC	-.13687586 02	ELE	.30304337 02	AZI	.22159870 03		
CKM	.17997370 03	CKC	.27337493 03	CKT	.33495207 03	PSS	.37766404 02	PSM	.99503465 02		
UT	.24191421 04	DHA	.41723276-02	DDE	-.34567281-05	DEL	-.22662308-02	DAZ	.38931948-02		
ET	.24191324 04	RGE	.57755948 08	DRG	.16876814 02	DDR	.00000000 00	SLS	.24732600 03		
RDI	.63720326 04	PHI	.35205980 02	THI	.24315175 03	SPS	.56965247 02	POL	.27294735 03		
DT	.19265308 03	RF1	.00000000 00	RF2	.00000000 00	BF1	.95942269 05				
ESS1	-.15742600 03	ESS2	-.18102600 03	F1	.15393555 06	F2	.20809199 06	PRA	.22300020 03		

100 DAYS 19 HRS. 8 MIN. 31.767 SEC. JULIAN DATE 2438013.31393248 DEC. 14,1962 19 32 03.768

CASE 1 SPACE TRAJECTORIES 20

EARTH-VENUS,RADIATION PRES. ON CHECK 2

GEOCENTRIC EQUATORIAL COORDINATES

X	-.41041269 08	Y	-.38276081 08	Z	-.13662981 08	DX	-.71781137 01	DY	-.14808244 02	DZ	-.73790535 01
R	.57759165 08	DEC	-.13683059 02	RA	.22300334 03	V	.18034961 02	PTH	.67475498 02	AZ	.12081099 03
R	.57759164 08	LAT	-.13683059 02	LON	.20700176 03	VE	.40864298 04	PTE	.23357881 00	AZE	.26995037 03
XS	-.19624376 08	YS	-.13388348 09	ZS	-.58054677 08	DXS	.29999201 02	DYS	-.35499032 01	DZS	-.15380701 01
XM	-.22457050 06	YM	.28698900 06	ZM	.12806375 06	DXM	-.85995150 00	DYM	-.53033113 00	DZM	-.12960872 00
XT	-.41077879 08	YT	-.38285690 08	ZT	-.13644964 08	DXT	-.44384709 01	DYT	-.10886235 02	DZT	-.26655261 01
RS	.14724214 09	VS	.30247637 02	RM	.38625758 06	VM	.10186099 01	RT	.57787292 08	VT	.12054674 02
GED	-.13772766 02	ALT	.57752788 08	LOS	.24565950 03	RAS	.26166108 03	RAM	.12804338 03	LOM	.11204180 03
DUT	.35000000 02	DT	.48000000 03	DR	.16659179 02	SHA	-.35372918 08	DES	-.23221097 02	DEM	.19362888 02
DAC	.00000000 00										
BOARD UNITS											
UE	.20000000 01	VE	.20000000 01	ALF	.80000000 02	S1	.50000000 05	S2	.10000000 05		
UP1	.58876960 03	VP1	.41107863 03	UM1	.34955930 01	VM1	-.96581203 00	S	.65633225 02	M	.30331610 03
UP2	.29358480 04	VP2	.20473931 04	UM2	.94779649 01	VM2	-.12829060 02	GM	.21170317 03		

HELIOCENTRIC ECLIPTIC COORDINATES

X	-.21416893 08	Y	.10537623 09	Z	.26921150 07	DX	-.37177315 02	DY	-.12652785 02	DZ	-.87996280 00
R	.10756430 09	LAT	.14341450 01	LON	.10148844 03	V	.39281294 02	PTH	-.73351032 01	AZ	.91109930 02
XE	.19624376 08	YE	.14592851 09	ZE	-.16000000 02	DXE	-.29999201 02	DYE	.38687816 01	DZE	-.11400431-02
XT	-.21453503 08	YT	.10537458 09	ZT	.27124675 07	DXT	-.34437672 02	DYT	-.71793212 01	DZT	.18842154 01
LTE	-.62260197-05	LOE	.82340847 02	LTT	.14449069 01	LOT	.10150773 03	RST	.10757050 09	VST	.35228485 02
EPS	.12303603 03	ESP	.19199214 02	SEP	.37764755 02	EPM	.37800648 00	EMP	.80549616 02	MEP	.99072420 02
MPS	.12341362 03	MSP	.19096706 02	SMP	.37489669 02	SEM	.13678795 03	EMS	.43109335 02	ESM	.10326686 00
EPT	.13212806 03	ETP	.47841109 02	TEP	.30486634-01	TPS	.98483484 02	TSP	.22117329-01	STP	.81494431 02
SET	.37790202 02	STE	.12299057 03	EST	.19219225 02	RPM	.57821330 08	RPT	.41918657 05	SPN	.12302970 03
SAC	-.23557936-09										
GCE	.86618738 02	GCT	.24157714 03	SIP	.89977916 02	CPT	.11526082 03	SIN	.10675525 03	D1	.44865099 01
REP	.57759165 08	VEP	.18034961 02	CPE	.80313889 02	CPS	.10271791 03	D2	.76873025 00	D3	.10034218 00
PUBLIC INFORMATION											
X	-.13307840 01	Y	.65477752 01	RPE	.35889881 08	RPT	.26047046 05	VGC	.40343058 05	V	.87869751 05

BRONSTEIN ANGLES REFERENCE BODY IS EARTH GHR .12303603 03

BODY 1 IS MOON	GHG	.12341362 03	GSL	-.16663100-01	GCK	-.19966125-01	ACK	-.30259445-01
	GLG	.12354652 03	GLT	-.26653310 01	ALT	-.41428871 01	BLT	-.48137388 01
BODY 2 IS VENUS	GHG	-.99348842 02	GSL	.24749058 02	GCK	.25041597 02	ACK	.70588286 02
	GLG	-.98910877 02	GLT	.29047088 02	ALT	.29164520 02	BLT	.74351864 02
BODY 3 IS EARTH	GHG	.12303603 03	GSL	.80041277-07	GCK	.25613208-05	ACK	-.27347437-06
	GLG	.12316819 03	GLT	-.26714996 01	ALT	-.41229248 01	BLT	-.48732468 01

CASE 1 SPACE TRAJECTORIES 21

EARTH-VENUS,RADIATION PRES. ON CHECK 2

APHRODIOCENTRIC ECLIPTIC COORDINATES

X	.36609094 05	Y	.16480463 04	Z	-.20352692 05	DX	-.27396428 01	DY	-.54734641 01	DZ	-.27641782 01
R	.41918657 05	DEC	-.29047088 02	RA	.25775682 01	V	.67160355 01	PTH	-.10863191 02	AZ	.23412876 03
ALT	.35718657 05	SHA	-.41457615 05	ALP	.30893663 01	DR	-.12657346 01	DP	.90151947-02	ASD	.85055679 01
HGE	.23696396 03	SVL	-.24749058 02	HNG	.99348835 02	SIA	.12362250 03				
SAC	-.23557936-09										

APHRODIOCENTRIC CONIC

EPOCH OF PERICENTER PASSAGE JULIAN DATE 2438013.33032109 DEC. 14,1962 19 55 39.742

SMA	-.10968270 05	ECC	.47391531 01	B	.50809937 05	SLR	.23537439 06	APO	.00000000 00	RCA	.41012042 05
VH	.54414988 01	C3	.29609910 02	C1	.27648223 06	TFP	-.14159747 04	TF	.10081398 03	LTF	.10077768 03
TA	-.13142308 02	MTA	.10218144 03	EA	-.10685638 02	MA	-.40249318 02			TFI	.10079759 03
ZAE	.13775840 03	ZAP	.39964917 02	ZAC	.71961792 02	DEF	.24362888 02	IR	.13207821 05	GP	-.30447923 02

ALL VECTORS REFERENCED TO ECLIPTIC PLANE

X	.36609094 05	Y	.16480463 04	Z	-.20352692 05	DX	-.27396428 01	DY	-.54734641 01	DZ	-.27641782 01
INC	.13510590 03	LAN	.21645656 03	APF	.23660745 03	MX	-.81607183-01	MY	-.79894338 00	MZ	-.59191176 00
WX	-.41939485 00	WY	.56767903 00	WZ	-.70841264 00	PX	.79412620 00	PY	-.14868349 00	PZ	-.58928498 00
QX	-.43985399 00	QY	-.80971211 00	QZ	-.38845170 00	RX	.15312953 00	RY	.48022612 00	RZ	-.86367481 00
BX	.86905869 00	BY	.25520097-01	BZ	-.49405034 00	TX	-.95273626 00	TY	.30379867 00	TZ	.00000000 00
SXI	-.26238326 00	SYI	-.82285430 00	SZI	-.50404938 00	DAI	-.30268270 02	RAI	.25231409 03		
SXO	-.59751749 00	SYO	-.76010744 00	SZO	-.25536149 00	DAO	-.14795005 02	RAO	.23182924 03		
ETE	.31365262 03	ETS	.40611845 02	ETC	.26212926 03						
B.T	-.41675874 05	B.R	.29064951 05	B	.50809938 05	THA	.14510790 03				

100 DAYS 19 HRS. 32 MIN. 7.747 SEC. JULIAN DATE 2438013.33032114 DEC. 14,1962 19 55 39.747

GEOCENTRIC EQUATORIAL COORDINATES

X	-.41051590 08	Y	-.38297087 08	Z	-.13673341 08	DX	-.73993233 01	DY	-.14859114 02	DZ	-.72430354 01
R	.57782871 08	DEC	-.13687908 02	RA	.22301183 03	V	.18110903 02	PTH	.68228149 02	AZ	.11999715 03
R	.57782871 08	LAT	-.13687908 02	LON	.20109419 03	VE	.40881415 04	PTE	.23572178 00	AZE	.26995292 03
XS	-.19581895 08	YS	-.13388850 09	ZS	-.58056852 08	DXS	.30000383 02	DYS	-.35420556 01	DZS	-.15346677 01
XM	-.22578550 06	YM	.28623650 06	ZM	.12787937 06	DXM	-.85769993 00	DYM	-.53314388 00	DZM	-.13086504 00
XT	-.41084160 08	YT	-.38301107 08	ZT	-.13648742 08	DXT	-.44340473 01	DYT	-.10892820 02	DZT	-.26688284 01
RS	.14724191 09	VS	.30247716 02	RM	.38634642 06	VM	.10183404 01	RT	.57802864 08	VT	.12059724 02
GED	-.13777645 02	ALT	.57776494 08	LOS	.23976153 03	RAS	.26167918 03	RAM	.12826664 03	LOM	.10634899 03
DUT	.35000000 02	DT	.48000000 03	DR	.16819019 02	SHA	-.35393171 08	DES	-.23222056 02	DEM	.19329280 02
DAC	.00000000 00										

BOARD UNITS

UE	.20000000 01	VE	.20000000 01	ALF	.80000000 02	S1	.50000000 05	S2	.10000000 05		
UP1	.58896770 03	VP1	.41129280 03	UM1	.35113297 01	VM1	-.95746475 00	S	.65645904 02	M	.30374604 03
UP2	.29368385 04	VP2	.20484640 04	UM2	.95566488 01	VM2	-.12787324 02	GM	.21585617 03		

CASE 1 SPACE TRAJECTORIES 22

EARTH-VENUS,RADIATION PRES. ON CHECK 2

HELIOCENTRIC ECLIPTIC COORDINATES

X	-.21469696 08	Y	.10535831 09	Z	.26909665 07	DX	-.37399706 02	DY	-.12653898 02	DZ	-.73493350 00
R	.10755725 09	LAT	.14336268 01	LON	.10151791 03	V	.39489229 02	PTH	-.71983175 01	AZ	.90894068 02
XE	.19581895 08	YE	.14593398 09	ZE	-.17000000 02	DXE	-.30000383 02	DYE	.38602282 01	DZE	-.11396557-02
XT	-.21502265 08	YT	.10536440 09	ZT	.27151340 07	DXT	-.34434430 02	DYT	-.71952295 01	DZT	.18838056 01
LTE	-.66151564-05	LOE	.82357513 02	LTT	.14463301 01	LOT	.10153427 03	RST	.10757034 09	VST	.35228539 02
EPS	.12301610 03	ESP	.19211945 02	SEP	.37771949 02	EPM	.37820055 00	EMP	.80753259 02	MEP	.98868624 02
MPS	.12339385 03	MSP	.19109039 02	SMP	.37497108 02	SEM	.13659199 03	EMS	.43304895 02	ESM	.10279207 00
EPT	.11915797 03	ETP	.60806527 02	TEP	.36342480-01	TPS	.10859669 03	TSP	.19782341-01	STP	.71382603 02
SET	.37800286 02	STE	.12297054 03	EST	.19229168 02	RPM	.57843693 08	RPT	.41012039 05	SPN	.12300978 03
SAC	-.23561029-09										
GCE	.86615796 02	GCT	.23288962 03	SIP	.99901657 02	CPT	.11918332 03	SIN	.11048828 03	D1	.45879833 01
REP	.57782871 08	VEP	.18110903 02	CPE	.80314077 02	CPS	.10271881 03	D2	.16899804 01	D3	.23636954 00
PUBLIC INFORMATION											
X	-.13340651 01	Y	.65466617 01	RPE	.35904611 08	RPT	.25483700 05	VGC	.40512936 05	V	.88334889 05

BRONSTEIN ANGLES REFERENCE BODY IS EARTH GHR .12301610 03

BODY 1 IS MOON	GHG	.12339385 03	GSL	-.16586260-01	GCK	-.19866943-01	ACK	-.30133086-01
	GLG	.12352651 03	GLT	-.26630327 01	ALT	-.41383438 01	BLT	-.48121252 01
BODY 2 IS VENUS	GHG	-.11202630 03	GSL	.31751375 02	GCK	.33726171 02	ACK	.58783613 02
	GLG	-.11212263 03	GLT	.36106306 02	ALT	.37844656 02	BLT	.62657318 02
BODY 3 IS EARTH	GHG	.12301610 03	GSL	.53360853-07	GCK	.25613208-05	ACK	-.60030958-07
	GLG	.12314804 03	GLT	-.26692635 01	ALT	-.41184807 01	BLT	-.48717928 01

APHRODIOCENTRIC ECLIPTIC COORDINATES

X	.32568720 05	Y	-.60978420 04	Z	-.24167792 05	DX	-.29652760 01	DY	-.54586688 01	DZ	-.26187392 01
R	.41012039 05	DEC	-.36106306 02	RA	.34939529 03	V	.67414925 01	PTH	-.12664460-06	AZ	.24126229 03
ALT	.34812040 05	SHA	-.38865941 05	ALP	.12283219 02	DR	.23811605-07	DP	.94181870-02	ASD	.86950339 01
HGE	.23698389 03	SVL	-.31751375 02	HNG	.11202630 03	SIA	.11046294 03				
SAC	-.23561029-09										

APHRODIOCENTRIC CONIC

EPOCH OF PERICENTER PASSAGE JULIAN DATE 2438013.33032114 DEC. 14,1962 19 55 39.747

SMA	-.10968252 05	ECC	.47391590 01	B	.50809918 05	SLR	.23537461 06	APO	.00000000 00	RCA	.41012039 05
VH	.54415033 01	C3	.29609959 02	C1	.27648236 06	TFP	.35925997-04	TF	.10081398 03	LTF	.10077768 03
TA	.25613208-05	MTA	.10218142 03	EA	.85377364-06	MA	.10212050-05			TFI	.10081398 03
ZAE	.13776090 03	ZAP	.39981245 02	ZAC	.71961840 02	DEF	.24362860 02	IR	.13207813 05	GP	-.30447872 02

ALL VECTORS REFERENCED TO ECLIPTIC PLANE

X	.32568720 05	Y	-.60978420 04	Z	-.24167792 05	DX	-.29652760 01	DY	-.54586688 01	DZ	-.26187392 01
INC	.13510592 03	LAN	.21645658 03	APF	.23660752 03	MX	-.27105050 00	MY	-.81412045 00	MZ	-.49191890 00
WX	-.41939499 00	WY	.56767873 00	WZ	-.70841280 00	PX	.79412583 00	PY	-.14868419 00	PZ	-.58928529 00
QX	-.43985451 00	QY	-.80971220 00	QZ	-.38845094 00	RX	.15312967 00	RY	.48022521 00	RZ	-.86367527 00
BX	.86905836 00	BY	.25519207-01	BZ	-.49405094 00	TX	-.95273601 00	TY	.30379944 00	TZ	.00000000 00

CASE 1

SPACE TRAJECTORIES

23

EARTH-VENUS,RADIATION PRES. ON

CHECK 2

SXI	-.26238407 00	SYI	-.82285454 00	SZI	-.50404856 00	DAI	-.30268214 02	RAI	.25231405 03
SXO	-.59751773 00	SYO	-.76010746 00	SZO	-.25536085 00	DAO	-.14794968 02	RAO	.23182923 03
ETE	.31364295 03	ETS	.40579117 02	ETC	.26212926 03				
B.T	-.41675843 05	B.R	.29064958 05	B	.50809918 05	THA	.14510787 03		

625535030676	625730425255	621606475633	601700261755	602465443457	575673744666
	620900500		2332000		000000000000

EARTH-VENUS,RADIATION PRES. ON CHECK 2

TIME ON 012135 TIME OFF 012142

MONITOR CONTROL WORDS

TRAJ

```
    DATA
230 BCD 1TRAJ
    TRA 3,4
112 OCT +0
110 BCD 2VENUS EARTH
260 BCD 1EARTH
261 DEC 3
262 BCD 2MOON  VENUS
264 BCD 1EARTH
279 DEC 80.0
280 DEC 50000.0
282 DEC 2.0
283 DEC 2.0
136 DEC 25.
267 DEC -.102E9,0,0,3.83,.383,198.22
100 BCD  EARTH-VENUS,RADIATION PRES. ON                    CHECK 2
114 DEC 620900500,2332000
116 DEC -.14242091E+07,-.19394899E+07,-.10167163E+06
119 DEC -.17445131E+01,-.24233613E+01,-.11043332
    TRA 3,4
140 OCT -1
141 BCD 1EARTH
142 DEC 2.5E6
143 BCD 1VENUS
144 DEC 0
145 DEC 1
146 BCD 1EARTH
150 BCD 1EARTH
147 DEC 0,0
149 OCT 0
172 OCT 0
179 BCD 1
151 DEC 4000,0,1000,0,20000,0,20000,0
167 OCT 152400001100
178 OCT 1
168 OCT 0,0
170 OCT 0,0
178 OCT 100001000000
    TRA 3,4
140 OCT 5
141 BCD 1VENUS
142 DEC 2.5E6
143 BCD 1VENUS
144 DEC 0
145 DEC 1
146 BCD 1SUN
150 BCD 1SUN
147 DEC 0,0
149 OCT 0
172 OCT 0
179 BCD 1
151 DEC 6000,0,1000,0,20000,0,20000,0
167 OCT 152400001100
178 OCT 1
168 OCT 0,0
170 OCT 0,0
178 OCT 100001000000
    TRA 3,4
140 OCT 0
141 BCD 1VENUS
142 DEC 6100.
```

```
143 BCD 1VENUS
144 DEC 1E3
145 DEC 1
146 BCD 1VENUS
150 BCD 1VENUS
147 DEC 0,0
149 OCT 0
172 OCT 0
179 BCD 1
151 DEC 20000,00,200,0
167 OCT 152402201110
178 OCT 1
168 OCT 0,0
170 OCT 0,0
178 OCT 10000100100
    TRA 3,4
    TRA 4,4
    TRA 180
EOF
```

Check Case 3

Check case 3 is an Earth-Mars trajectory run at JPL during the trajectory design phase of the Mariner C mission. Parking orbit injection occurs on November 11, 1964, and time of flight is 257.68 days.

This case shows how parking-orbit injection conditions can be input to the Powered Flight Program which then simulates the parking orbit and second burn of the second-stage vehicle, how the end conditions of the Powered Flight Program become the injection conditions of the Space Trajectory Program (hence the EXTEND option), and how the searching technique works; i.e., how the desired values of the miss parameters $\overline{B} \cdot \overline{T}$ and $\overline{B} \cdot \overline{R}$ are searched to by varying time of launch and time of coast.

A minimum of printout was needed so the "canned" values of the phasing parameters were used.

The approximate running time on an IBM 7094 is 2.3 min.

```
ADR,1011010,45013120   3                 012043    011010 +   06/28/63   ********************
                                CHECK CASE 3
```

```
*      HIT START AFTER OCTAL 150 STOP
*     XEQ
```

ENTRY NAME	ENTRY ADD.	NO. OF TRANSFERS	LOAD ADD.
MAIN	00144	00000	00144

LOGICAL TAPE	MACHINE TAPE	TOTAL WRITES	TOTAL READS	NOISE RECORDS WRITING	NOISE RECORDS READING	TOTAL REDUNDANCIES WRITING	TOTAL REDUNDANCIES READING	POSITIONING ERRORS
1	A 1	0	5	0	0	0	0	0
5	A 2	0	11	0	0	0	0	0
6	A 3	11	0	0	0	0	0	0
7	B 4	5	1	0	0	0	0	0

EXECUTION

EARTH-MARS,EXTENDED SEARCH CHECK 3

```
                                                                                                                    PAGE  1
POWER FLIGHT TRAJECTORY                                                                                          EGGNOG
IDENT   12.000              EARTH-MARS,EXTENDED SEARCH                                  CHECK 3          OCTOBER 26

LAUNCH CONDITIONS
AZI.10200000 03 LAT.28317510 02 GED.28480312 02 LON.27945775 03 RAD.63733216 07
LAUNCH DATE  11 11 1964 JDT.24387105 07 GHA.50164659 02 TL .57246999 05    NOVEMBER 11,1964      15  54   7.000
GME .39860319 15 RE .63781650 07 D .78749999-05 H-.57499999-05 J .16234500-02        RA2 - MARINER CONSTANTS

 PSUEDO S CONSTANTS
 RAO  .00000000 00 DEO  .00000000 00 A  .00000000 00 B  .00000000 00 D  .00000000 00 E.00000000 00 .  TIS  .00000000 00

CONTROL FROM HORIZON .00000000 00


   MTR  2            FRC .16000000 05 FE  .00000000 00 WG  .74180000 04 WPD .54600000 02 DIA        5.000
   BRN .00000000 00 CST .21180000 04

                                                                                  NOVEMBER 11,1964      16   2  28.141

   TIM .50114086 03 ACX .21151140-01 INA .00000000 00 DDX .17039044-01 DDY-.15583702-01 DDZ-.40808010-03
   XP  .21090600 04 YP -.16092500 03 ZP -.62796389 02 DXP .73802745 01 DYP-.25105321 01 DZP-.17749978 00
   R   .65619824 04 LAT .23485414 02 LON .29754250 03 VE  .73855131 01 PTE .57622043-02 AZE .11069334 03
   ALT .18722481 03 RNG .20867162 04 ARC .18757341 02 V   .77976104 01 PTH .54577282-02 AZ  .10955375 03
   GED .23627973 02 F   .16000000 05 DRG .00000000 00 N   .00000000 00 CHI .34120788 03 TAU .00000000 00
   XM  .00000000 00 YM  .00000000 00 ZM  .00000000 00 DXM .00000000 00 DYM .00000000 00 DZM .00000000 00
   XDD .20018461-01 YDD-.68117651-02 ZDD-.48145708-03 ALA .11396087 01 W   .74179999 04 PAY .73500000 04
   X  -.39497580 04 Y  -.45409829 04 Z   .26150522 04 DX  .48611125 01 DY -.56075315 01 DZ -.23933031 01
   DT  .00000000 00 DTP .00000000 00 DW  .54600000 02 C3 -.60685922 02 MCH .22027897 02 BTM .00000000 00

                                                                                  NOVEMBER 11,1964      16   2  28.141

   TIM .50114086 03 ACX .21151140-01 INA .00000000 00 DDX .17039044-01 DDY-.15583702-01 DDZ-.40808010-03
   XP  .21090600 04 YP -.16092500 03 ZP -.62796389 02 DXP .73802745 01 DYP-.25105321 01 DZP-.17749978 00
   R   .65619824 04 LAT .23485414 02 LON .29754250 03 VE  .73855131 01 PTE .57622043-02 AZE .11069334 03
   ALT .18722481 03 RNG .20867162 04 ARC .18757341 02 V   .77976104 01 PTH .54577282-02 AZ  .10955375 03
   GED .23627973 02 F   .16000000 05 DRG .00000000 00 N   .00000000 00 CHI .34120788 03 TAU .00000000 00
   XM  .00000000 00 YM  .00000000 00 ZM  .00000000 00 DXM .00000000 00 DYM .00000000 00 DZM .00000000 00
   XDD .20018461-01 YDD-.68117651-02 ZDD-.48145708-03 ALA .11396087 01 W   .74179999 04 PAY .73500000 04
   X  -.39497580 04 Y  -.45409829 04 Z   .26150522 04 DX  .48611125 01 DY -.56075315 01 DZ -.23933031 01
   DT  .20000000 01 DTP .20000000 01 DW  .54600000 02 C3 -.60685922 02 MCH .22027897 02 BTM .00000000 00

                                                                                  NOVEMBER 11,1964      16   2  28.141

   TIM .50114086 03 ACX .00000000 00 INA .00000000 00 DDX-.29794175-02 DDY-.87719370-02 DDZ .73376980-04
   XP  .21090600 04 YP -.16092500 03 ZP -.62796389 02 DXP .73802745 01 DYP-.25105321 01 DZP-.17749978 00
   R   .65619824 04 LAT .23485414 02 LON .29754250 03 VE  .73855131 01 PTE .57622043-02 AZE .11069334 03
   ALT .18722481 03 RNG .20867162 04 ARC .18757341 02 V   .77976104 01 PTH .54577282-02 AZ  .10955375 03
   GED .23627973 02 F   .00000000 00 DRG .00000000 00 N   .00000000 00 CHI .34121334 03 TAU .00000000 00
   XM  .00000000 00 YM  .00000000 00 ZM  .00000000 00 DXM .00000000 00 DYM .00000000 00 DZM .00000000 00
   XDD .00000000 00 YDD-.00000000 00 ZDD .00000000 00 ALA .11396087 01 W   .74179999 04 PAY .73500000 04
   X  -.39497580 04 Y  -.45409829 04 Z   .26150522 04 DX  .48611125 01 DY -.56075315 01 DZ -.23933031 01
   DT  .20000000 01 DTP .20000000 01 DW  .54600000 02 C3 -.60685922 02 MCH .22027897 02 BTM .00000000 00

COAST CONDITIONS

CONTROL FROM HORIZON .00000000 00
```

```
MTR  3            FRC .16000000 05 FE  .00000000 00 WG  .73499999 04 WPD .54600000 02 DIA        5.000
BRN .10000000 03 CST .00000000 00

                                                                          NOVEMBER 11,1964      16  37  46.141

TIM .26191409 04 ACX .21346824-01 INA .00000000 00 DDX-.23116394-01 DDY .26009837-02 DDZ .51266158-03
XP  .19172696 04 YP -.12648724 05 ZP -.70460300 02 DXP-.74514708 01 DYP-.22833008 01 DZP .16454056 00
R   .65630899 04 LAT-.30168032 02 LON .69058147 02 VE  .73815056 01 PTE .64770276-02 AZE .88815615 02
ALT .19036506 03 RNG .18124228 05 ARC .16294335 03 V   .77951878 01 PTH .61334562-02 AZ  .88878525 02
GED-.30337382 02 F   .16000000 05 DRG .00000000 00 N   .00000000 00 CHI .19703012 03 TAU .00000000 00
XM -.00000000 00 YM -.00000000 00 ZM  .00000000 00 DXM-.00000000 00 DYM-.00000000 00 DZM .00000000 00
XDD-.20406237-01 YDD-.62505472-02 ZDD .45060643-03 ALA .63719410-01 W   .73499998 04 PAY .59309999 04
X   .55988014 04 Y   .92165487 03 Z  -.32981997 04 DX -.11895673 01 DY  .77027651 01 DZ  .13148466 00
DT  .10000000 02 DTP .80000000 01 DW  .54600000 02 C3 -.60703196 02 MCH .22015944 02 BTM .00000000 00

                                                                          NOVEMBER 11,1964      16  39  23.035

TIM .27160354 04 ACX .76265177-01 INA .36570158 01 DDX-.76699529-01 DDY-.30940797-02 DDZ .17024478-02
XP  .10481314 04 YP -.12862313 05 ZP -.51254620 02 DXP-.11223964 02 DYP-.22057011 01 DZP .24821121 00
R   .65738077 04 LAT-.29706805 02 LON .77657387 02 VE  .11027286 02 PTE .19748092 01 AZE .84158187 02
ALT .20093200 03 RNG .18993619 05 ARC .17075748 03 V   .11441333 02 PTH .19033167 01 AZ  .84370537 02
GED-.29874589 02 F   .16000000 05 DRG .00000000 00 N   .00000000 00 CHI .18921418 03 TAU .00000000 00
XM -.13614486 03 YM -.34359609 02 ZM  .30094720 01 DXM-.35654766 01 DYM-.79376180 00 DZM .78879590-01
XDD-.75221566-01 YDD-.12202346-01 ZDD .16674403-02 ALA .56799152 00 W   .20595561 04 PAY .64055615 03
X   .54194261 04 Y   .17977695 04 Z  -.32577282 04 DX -.27421326 01 DY  .11080029 02 DZ  .78597572 00
DT  .20000000 01 DTP .36448013-03 DW  .54600000 02 C3  .96339908 01 MCH .32889783 02 BTM .96894561 02

CONIC - HYPERBOLA
MOM .75171626 11ENR .48169955 07ECC .11587216 01AXS .41374669 08 PDT.24218700 08 ANM.35459606 01 RTA  .15970462 03
MAX.14965739 03 PGE.65670523 07 EXV.31038671 04 VPG.11446783 05 TPG.16212084 03                    DCL  .27315175 02
INTEGRATED SYSTEM
                  XI            ETA           ZETA           S M            B
   .22074344 00-.97507443 00-.22410427-01-.68308401 00-.98686046 00-.72999593 00
  -.97531062 00-.22083219 00 .15347766-02 .73015493 00-.16008724 00-.68327992 00
  -.64454650-02 .21518336-01-.99974769 00 .16432976-01 .21875786-01 .15314703-01
VERNAL EQUINOX SYSTEM
       XI            ETA           ZETA           S              M              B
   .83934442 00-.21569732 00 .49897451 00-.83333519 00-.26719714 00 .23786020 00
   .21358399 00 .97494435 00 .62172197-01 .30818352 00 .95986783 00 .94929270 00
  -.49988276 00 .54389082-01 .86438362 00 .45888489 00 .85202297-01-.20558672 00

INJECTION TIME =      .59963035 05
```

CASE 1 SPACE TRAJECTORIES 1

EARTH-MARS,EXTENDED SEARCH CHECK 3
EPHEMERIS TAPE III WITH SATURN. B-8 IS T-1456

GME	.39860320 06	J	.16234500-02	H	-.57499999-05	D	.78749999-05	RE	.63781650 04	REM	.63783149 04
G	.66709998-19	A	.88745998 29	B	.88763998 29	C	.88800998 29	OME	.41780741-02	AU	.14959900 09
GMM	.49007589 04	GMS	.13271544 12	GMV	.32476950 06	GMA	.42977799 05	GMC	.37918700 08	GMJ	.12671060 09

INJECTION CONDITIONS MARS JULIAN DATE 2438711.19401661 NOV. 11,1964 16 39 23.035

GEOCENTRIC XO .54194261 04 YO .17977695 04 ZO-.32577282 04 DXO-.27421326 01 DYO .11080029 02 DZO .78597572 00
CARTESIAN GMC .00000000 00 SGC .00000000 00 TO .59963035 05 GHA .30069467 03 GHO .50164659 02

0 DAYS 0 HRS. 0 MIN. 0.000 SEC. JULIAN DATE 2438711.19401661 NOV. 11,1964 16 39 23.035
TFL 0 DAYS 16 HRS. 39 MIN. 23.035 SEC.

GEOCENTRIC EQUATORIAL COORDINATES

X	.54194257 04	Y	.17977694 04	Z	-.32577281 04	DX	-.27421324 01	DY	.11080029 02	DZ	.78597573 00
R	.65738072 04	DEC	-.29706807 02	RA	.18352073 02	V	.11441332 02	PTH	.19033176 01	AZ	.84370539 02
R	.65738070 04	LAT	-.29706808 02	LON	.77657408 02	VE	.11027285 02	PTE	.19748109 01	AZE	.84158196 02
XS	-.96481881 08	YS	-.10304342 09	ZS	-.44685420 08	DXS	.23091657 02	DYS	-.17704616 02	DZS	-.76783890 01
XM	.25834961 06	YM	-.26971410 06	ZM	-.14600505 06	DXM	.71534834 00	DYM	.62824837 00	DZM	.20905994 00
XT	-.20584434 09	YT	.93772373 08	ZT	.48581606 08	DXT	.23841254 01	DYT	-.25932696 02	DZT	-.10896679 02
RS	.14806581 09	VS	.30093781 02	RM	.40100834 06	VM	.97474372 00	RT	.23135540 09	VT	.28229884 02
GED	-.29874592 02	ALT	.20090424 03	LOS	.28618886 03	RAS	.22688353 03	RAM	.31376712 03	LOM	.13072456 02
DUT	.35000000 02	DT	.15000000 02	DR	.38000178 00	SHA	.53646985 04	DES	-.17565404 02	DEM	-.21351885 02
DAC	.00000000 00										

GEOCENTRIC CONIC

EPOCH OF PERICENTER PASSAGE JULIAN DATE 2438711.19360539 NOV. 11,1964 16 38 47.506

SMA	-.41374787 05	ECC	.11587211 01	B	.24218730 05	SLR	.14176434 05	APO	.00000000 00	RCA	.65670523 04
VH	.31038627 01	C3	.96339637 01	C1	.75171617 05	TFP	.35529023 02	TF	-.41121553-03	LTF	-.23139781-01
TA	.35458448 01	MTA	.14965742 03	EA	.96180589 00	MA	.15271181 00			TFI	.00000000 00
ZAE	.69020594 02	ZAP	.96653347 02	ZAC	.46222598 02	DEF	.11931486 03	IR	.17114571 05	GP	-.39358513 02

ALL VECTORS REFERENCED TO EARTH EQUATOR PLANE

X	.54194257 04	Y	.17977694 04	Z	-.32577281 04	DX	-.27421324 01	DY	.11080029 02	DZ	.78597573 00
INC	.30187603 02	LAN	.97102442 02	APF	.27620966 03	MX	-.26719714 00	MY	.95986784 00	MZ	.85202307-01
WX	.49897455 00	WY	.62172200-01	WZ	.86438361 00	PX	.83934399 00	PY	.21358597 00	PZ	-.49988268 00
QX	-.21569902 00	QY	.97494392 00	QZ	.54390100-01	RX	-.43039639 00	RY	.15916829 00	RZ	-.88849557 00
BX	.23785790 00	BY	.94929355 00	BZ	-.20558546 00	TX	.34685865 00	TY	.93791742 00	TZ	.00000000 00
SXI	.61540657 00	SYI	.67684050 00	SZI	-.40393278 00	DAI	-.23824267 02	RAI	.47721812 02		
SXO	-.83333547 00	SYO	.30818238 00	SZO	.45888517 00	DAO	.27315193 02	RAO	.15970470 03		
ETE	.18438900 03	ETS	.20820872 03	ETC	.30866250 03						
B.T	.22884272 05	B.R	.79282377 04	B	.24218730 05	THA	.19108602 02				

ALL VECTORS REFERENCED TO ORBIT PLANE OF TARGET

X	.21927914 04	Y	-.50608394 04	Z	-.35769415 04	DX	.88058931 01	DY	.61299132 01	DZ	-.39729690 01
INC	.39496922 02	LAN	.61537625 02	APF	.23526755 03	MX	-.60812696-01	MY	.91325096 00	MZ	.40280978 00
WX	.55915920 00	WY	-.30312337 00	WZ	.77165873 00	PX	.28598455 00	PY	-.80311165 00	PZ	-.52270879 00
QX	.77817335 00	QY	.51295990 00	QZ	-.36237866 00	RX	.40704194-01	RY	.26493755 00	RZ	-.96340604 00
BX	.81605013 00	BY	.36988179-01	BZ	-.57679638 00	TX	.98840275 00	TY	-.15185518 00	TZ	.00000000 00
SXI	.63991934 00	SYI	-.43397069 00	SZI	-.63417082 00	DAI	-.39358512 02	RAI	.32585626 03		
SXO	.14629820 00	SYO	.95223320 00	SZO	.26804615 00	DAO	.15548033 02	RAO	.81265543 02		
ETE	.16167037 03	ETS	.18549009 03	ETC	.28594390 03						
B.T	.24170691 05	B.R	-.15249367 04	B	.24218747 05	THA	.35638997 03				

8 DAYS 18 HRS. 37 MIN. 18.158 SEC. JULIAN DATE 2438719.96992122 NOV. 20,1964 11 16 41.194
TFL 9 DAYS 11 HRS. 16 MIN. 41.194 SEC.

CASE 1 SPACE TRAJECTORIES 2

EARTH-MARS,EXTENDED SEARCH CHECK 3

HELIOCENTRIC ECLIPTIC COORDINATES

X	.75834240 08	Y	.12674466 09	Z	.73331849 06	DX	-.28404469 02	DY	.17028764 02	DZ	.93161219 00
R	.14770098 09	LAT	.28446798 00	LON	.59106950 02	V	.33130961 02	PTH	.58037824-01	AZ	.88388946 02
XE	.77915193 08	YE	.12556900 09	ZE	.21050000 03	DXE	-.25786836 02	DYE	.15595775 02	DZE	-.12031197-02
XT	-.12476414 09	YT	.21041457 09	ZT	.74880270 07	DXT	-.19898524 02	DYT	-.10308633 02	DZT	.26997554 00
LTE	.81614027-04	LOE	.58180520 02	LTT	.17533036 01	LOT	.12066558 03	RST	.24473752 09	VST	.22411873 02
EPS	.91281860 02	ESP	.96909388 00	SEP	.87749046 02	EPM	.82792805 01	EMP	.89959364 02	MEP	.81761356 02
MPS	.99534877 02	MSP	.94377552 00	SMP	.79521299 02	SEM	.16857457 03	EMS	.11397840 02	ESM	.27088086-01
EPT	.16331871 03	ETP	.18701907 00	TEP	.16494262 02	TPS	.81761082 02	TSP	.61563647 02	STP	.36675267 02
SET	.80900996 02	STE	.36599968 02	EST	.62499031 02	RPM	.24742009 07	RPT	.21745342 09	SPN	.91135686 02
GCE	.83114039 02	GCT	.27833769 03	SIP	.81760186 02	CPT	.83250400 02	SIN	.83249503 02	D1	.46906596-03
REP	.25000007 07	VEP	.31265962 01	CPE	.82997268 02	CPS	.99624997 02	D2	.37621015-03	D3	.98483142-08

HELIOCENTRIC CONIC

EPOCH OF PERICENTER PASSAGE JULIAN DATE 2438719.68180636 NOV. 20,1964 04 21 48.070

SMA	.18975011 09	ECC	.22160494 00	B	.18503217 09	SLR	.18043172 09	APO	.23179967 09	RCA	.14770055 09
VH	.21110783 02	C3	-.69942221 03	C1	.48934728 10	TFP	.24893124 05	TF	.84877896 01	PER	.52176922 03
TA	.31992904 00	MTA	.00000000 00	EA	.25538162 00	MA	.19878779 00			TFI	.87759045 01

ALL VECTORS REFERENCED TO ECLIPTIC PLANE

X	.75834240 08	Y	.12674466 09	Z	.73331849 06	DX	-.28404469 02	DY	.17028764 02	DZ	.93161219 00
INC	.16359755 01	LAN	.49095888 02	APF	.96951272 01	MX	-.79145040 00	MY	.50575659 00	MZ	.26542928-01
WX	.21577593-01	WY	-.18693804-01	WZ	.99959239 00	PX	.51821270 00	PY	.85523769 00	PZ	.48078230-02
QX	-.85497897 00	QY	.51789773 00	QZ	.28141338-01	RX	.24915049-02	RY	.41118809-02	RZ	-.99998794 00
BX	.85497938 00	BY	-.51789798 00	BZ	-.28141351-01	TX	.85524799 00	TY	-.51821894 00	TZ	.00000000 00
DAP	.27547006 00	RAP	.58787143 02								
B.T	.18495889 09	B.R	.52071130 07	B	.18503217 09	THA	.16126132 01				

ALL VECTORS REFERENCED TO ORBIT PLANE OF TARGET

X	.14679522 09	Y	-.16331988 08	Z	-.80474500 05	DX	.36967059 01	DY	.32923849 02	DZ	-.12254673 00
INC	.21443558 00	LAN	.16527088 03	APF	.18806079 03	MX	-.78404694 00	MY	.51309843 00	MZ	-.11098647-02
WX	.95044204-03	WY	.36153844-02	WZ	.99999300 00	PX	.99323439 00	PY	-.11612241 00	PZ	-.52418825-03
QX	.11611970 00	QY	.99322796 00	QZ	-.37012918-02	RX	-.52064206-03	RY	.60870034-04	RZ	-.99999948 00
BX	-.11611974 00	BY	-.99322833 00	BZ	.37012931-02	TX	-.11612247 00	TY	-.99323490 00	TZ	.00000000 00
DAP	-.30034902-01	RAP	.35333163 03								
B.T	.18503089 09	B.R	-.68485811 06	B	.18503216 09	THA	.35978793 03				

252 DAYS 18 HRS. 22 MIN. 53.633 SEC. JULIAN DATE 2438963.95991514 JULY 22,1965 11 02 16.668

TFL 253 DAYS 11 HRS. 2 MIN. 16.668 SEC.

EARTH-MARS,EXTENDED SEARCH CHECK 3

HELIOCENTRIC ECLIPTIC COORDINATES

X	-.14175118 09	Y	-.18084684 09	Z	-.35516950 06	DX	.16294593 02	DY	-.13670514 02	DZ	-.60002154 00
R	.22978055 09	LAT	-.88561939-01	LON	.23190997 03	V	.21278081 02	PTH	.19070246 01	AZ	.91613849 02
XE	.74651922 08	YE	-.13238845 09	ZE	.20300000 03	DXE	.25469646 02	DYE	.14516865 02	DZE	-.89895725-03
XT	-.14374682 09	YT	-.18096304 09	ZT	-.29274450 06	DXT	.19911645 02	DYT	-.13009442 02	DZT	-.76164728 00
LTE	.76527289-04	LOE	.29941801 03	LTT	-.72576734-01	LOT	.23153835 03	RST	.23110789 09	VST	.23797043 02
EPS	.39288101 02	ESP	.67508066 02	SEP	.73203831 02	EPM	.42543532-01	EMP	.25593060 02	MEP	.15436428 03
MPS	.39245768 02	MSP	.67650340 02	SMP	.73103888 02	SEM	.81340290 02	EMS	.98517229 02	ESM	.14230920 00
EPT	.17052350 03	FTP	.93921766 01	TEP	.84510202-01	TPS	.13139398 03	TSP	.37194022 00	STP	.48234044 02
SET	.73121188 02	STE	.38999129 02	EST	.67879682 02	RPM	.22210718 09	RPT	.19999964 07	SPN	.39286454 02
GCE	.25862734 03	GCT	.81126811 02	SIP	.13129658 03	CPT	.89023028 02	SIN	.88925624 02	D1	.51000164-01
REP	.22176258 09	VEP	.29649096 02	CPE	.90544006 02	CPS	.81529385 02	D2	.34013749-01	D3	.77426596-04

HELIOCENTRIC CONIC

EPOCH OF PERICENTER PASSAGE JULIAN DATE 2438719.72351757 NOV. 20,1964 05 21 51.918

SMA	.18894763 09	ECC	.21853600 00	B	.18438053 09	SLR	.17992387 09	APO	.23023948 09	RCA	.14765577 09
VH	.21223906 02	C3	-.70239273 03	C1	.48865813 10	TFP	.21102025 08	TF	.85295002 01	PER	.51846275 03
TA	.17314818 03	MTA	.00000000 00	EA	.17144969 03	MA	.16958807 03			TFI	.25276589 03

ALL VECTORS REFERENCED TO ECLIPTIC PLANE

X	-.14175118 09	Y	-.18084684 09	Z	-.35516950 06	DX	.16294593 02	DY	-.13670514 02	DZ	-.60002154 00
INC	.16162538 01	LAN	.48769791 02	APF	.99932402 01	MX	.72701351 00	MY	-.60998020 00	MZ	-.26771909-01
WX	.21212509-01	WY	-.18589909-01	WZ	.99960215 00	PX	.51863056 00	PY	.85498421 00	PZ	.48945705-02
QX	-.85473504 00	QY	.51832040 00	QZ	.27777655-01	RX	.25385047-02	RY	.41848314-02	RZ	-.99998782 00
BX	.85473520 00	BY	-.51832050 00	BZ	-.27777661-01	TX	.85499462 00	TY	-.51863687 00	TZ	.00000000 00
DAP	.28043988 00	RAP	.58759139 02								
B.T	.18430936 09	B.R	.51217196 07	B	.18438051 09	THA	.15917674 01				

ALL VECTORS REFERENCED TO ORBIT PLANE OF TARGET

X	-.22977570 09	Y	-.14916510 07	Z	-.16003000 05	DX	-.57002580 00	DY	-.21270266 02	DZ	.86939751-01
INC	.23427686 00	LAN	.18134736 03	APF	.18587636 03	MX	.72016055 00	MY	-.61692315 00	MZ	.25924699-02
WX	-.96196466-04	WY	.40899280-02	WZ	.99999164 00	PX	.99206273 00	PY	.12574353 00	PZ	-.41885255-03
QX	-.12574419 00	QY	.99205438 00	QZ	-.40695611-02	RX	-.41552802-03	RY	-.52667999-04	RZ	-.99999993 00
BX	.12574418 00	BY	-.99205437 00	BZ	.40695610-02	TX	.12574353 00	TY	-.99206278 00	TZ	.00000000 00
DAP	-.23999577-01	RAP	.72236963 01								
B.T	.18437901 09	B.R	-.75034793 06	B	.18438054 09	THA	.35976683 03				

259 DAYS 0 HRS. 5 MIN. 6.554 SEC. JULIAN DATE 2438970.19756468 JULY 28,1965 16 44 29.589

TFL 259 DAYS 16 HRS. 44 MIN. 29.589 SEC.

GEOCENTRIC EQUATORIAL COORDINATES

X	-.22070042 09	Y	-.58516146 08	Z	-.26114662 08	DX	-.67604616 01	DY	-.27004988 02	DZ	-.12364381 02
R	.22981469 09	DEC	-.65248182 01	RA	.19484963 03	V	.30460649 02	PTH	.29012552 02	AZ	.11381304 03
R	.22981468 09	LAT	-.65248190 01	LON	.35759059 03	VE	.16625442 05	PTE	.50913937-01	AZE	.26996292 03
XS	-.87946325 08	YS	.11362327 09	ZS	.49274383 08	DXS	-.23812446 02	DYS	-.15733778 02	DZS	-.68224647 01
XM	-.22112600 06	YM	.24589800 06	ZM	.13532700 06	DXM	-.86449248 00	DYM	-.64624095 00	DZM	-.21982563 00
XT	-.22074082 09	YT	-.58290455 08	ZT	-.26043716 08	DXT	-.30931747 01	DYT	-.26379471 02	DZT	-.12266054 02
RS	.15189723 09	VS	.29345023 02	RM	.35731769 06	VM	.11014980 01	RT	.22978808 09	VT	.29255773 02
GED	-.65688968 01	ALT	.22980831 09	LOS	.29048143 03	RAS	.12774047 03	RAM	.13196375 03	LOM	.29470470 03
DUT	.35000000 02	DT	.19200000 04	DR	.14773452 02	SHA	-.21704516 09	DES	.18928797 02	DEM	.22255050 02
DAC	.00000000 00										

CASE 1 SPACE TRAJECTORIES 4

EARTH-MARS,EXTENDED SEARCH CHECK 3

HELIOCENTRIC ECLIPTIC COORDINATES

X	-.13275410 09	Y	-.18792293 09	Z	-.67783099 06	DX	.17051984 02	DY	-.12545635 02	DZ	-.60003442 00
R	.23008506 09	LAT	-.16879446 00	LON	.23476152 03	V	.21178365 02	PTH	.11088505 01	AZ	.91620589 02
XE	.87946325 08	YE	-.12384754 09	ZE	-.32650000 03	DXE	.23812446 02	DYE	.17149280 02	DZE	-.61255693-03
XT	-.13279450 09	YT	-.18768764 09	ZT	-.70253500 06	DXT	.20719271 02	DYT	-.11932636 02	DZT	-.75869405 00
LTE	-.12315611-03	LOE	.30537923 03	LTT	-.17507482 00	LOT	.23471947 03	RST	.22991634 09	VST	.23921781 02
EPS	.38571892 02	ESP	.70617791 02	SEP	.70810317 02	EPM	.83050504-01	EMP	.11200628 03	MEP	.67911124 02
MPS	.38489561 02	MSP	.70610826 02	SMP	.70899610 02	SEM	.51659020 01	EMS	.17482193 03	ESM	.13988227-01
EPT	.83604898 02	ETP	.96335628 02	TEP	.58933450-01	TPS	.45309349 02	TSP	.42543532-01	STP	.13464813 03
SET	.70751175 02	STE	.38588974 02	EST	.70659851 02	RPM	.22968056 09	RPT	.24000349 06	SPN	.38570301 02
GCE	.25904211 03	GCT	.70607466 02	SIP	.44497643 02	CPT	.69971185 02	SIN	.69159479 02	D1	.42503646 00
REP	.22981469 09	VEP	.30460649 02	CPE	.89745543 02	CPS	.81058249 02	D2	.30170553 00	D3	.59483526-02

AREOCENTRIC ECLIPTIC COORDINATES

X	.40397591 05	Y	-.23528581 06	Z	.24704181 05	DX	-.36672870 01	DY	-.61299916 00	DZ	.15865966 00
R	.24000349 06	DEC	.59080683 01	RA	.27974245 03	V	.37215501 01	PTH	.14338340-06	AZ	.27245647 03
ALT	.23660349 06	SHA	.17074712 06	ALP	.17388428 03	DR	.24413707-07	DP	.88844167-03	ASD	.81170565 00
HGE	.32142810 03	SVL	-.59855551 01	HNG	.44997804 02	SIA	.82793192 02				

AREOCENTRIC CONIC

EPOCH OF PERICENTER PASSAGE JULIAN DATE 2438970.19756468 JULY 28,1965 16 44 29.589

SMA	-.31854775 04	ECC	.76343018 02	B	.24316810 06	SLR	.18562595 08	APO	.00000000 00	RCA	.24000350 06
VH	.36731174 01	C3	.13491792 02	C1	.89318503 06	TFP	.50214992-03	TF	.25900354 03	LTF	.25896002 03
TA	.25613208-05	MTA	.90750524 02	EA	.00000000 00	MA	.33175410-04			TFI	.25900355 03
ZAE	.17352080 03	ZAP	.13544956 03	ZAC	.91406026 02	DEF	.15011074 01	IR	.57637875 04	GP	.13542190 01

ALL VECTORS REFERENCED TO ECLIPTIC PLANE

X	.40397591 05	Y	-.23528581 06	Z	.24704181 05	DX	-.36672870 01	DY	-.61299916 00	DZ	.15865966 00
INC	.17360327 03	LAN	.34711727 03	APF	.67501605 02	MX	-.90240522 00	MY	-.17461576 00	MZ	.41639611-01
WX	-.24840010-01	WY	-.10860772 00	WZ	-.99377429 00	PX	.16832085 00	PY	-.98034329 00	PZ	.10293259 00
QX	-.98541923 00	QY	-.16471608 00	QZ	.42632681-01	RX	-.43277281-01	RY	-.78154363-02	RZ	-.99903251 00
BX	.18121419 00	BY	-.97810160 00	BZ	.10236532 00	TX	-.17771518 00	TY	.98408196 00	TZ	.00000000 00
SXI	-.98312989 00	SYI	-.17754325 00	SZI	.43977314-01	DAI	.25205259 01	RAI	.19023670 03		
SXO	-.98753948 00	SYO	-.15186065 00	SZO	.41280733-01	DAO	.23658836 01	RAO	.18874228 03		
ETE	.15549856 03	ETS	.17718702 03	ETC	.25586381 03						
B.T	-.24188822 06	B.R	-.24916086 05	B	.24316810 06	THA	.18588110 03				

```
B.T    /TMLNCH-.42846008 04     B.R    /TMLNCH-.26277167 02
B.TB.R/TMLNCH .42846813 04     DELTA  TMLNCH-.62115777 02
                    EARTH-MARS,EXTENDED SEARCH                    CHECK 3
```

```
                                                                                                                                  PAGE  5
POWER FLIGHT TRAJECTORY                                                                                                   EGGNOG
IDENT   12.000              EARTH-MARS,EXTENDED SEARCH                                          CHECK 3          OCTOBER 26

LAUNCH CONDITIONS
AZI.10200000 03 LAT.28317510 02 GED.28480312 02 LON.27945775 03 RAD.63733216 07
LAUNCH DATE  11 11 1964 JDT.24387105 07 GHA.50164659 02 TL .57184883 05    NOVEMBER 11,1964      15  53   4.884
GME .39860319 15 RE .63781650 07 D .78749999-05 H-.57499999-05 J .16234500-02        RA2 - MARINER CONSTANTS

 PSUEDO S CONSTANTS
 RAO  .00000000 00 DEO  .00000000 00 A  .00000000 00 B  .00000000 00 D  .00000000 00 E.00000000 00   TIS  .00000000 00

CONTROL FROM HORIZON .00000000 00


   MTR  2            FRC .16000000 05 FE  .00000000 00 WG  .74180000 04 WPD .54600000 02 DIA        5.000
   BRN .00000000 00 CST .21180000 04

                                                                                  NOVEMBER 11,1964      16   1  26.024

   TIM .50114086 03 ACX .21151140-01 INA .00000000 00 DDX .17039044-01 DDY-.15583702-01 DDZ-.40808010-03
   XP  .21090600 04 YP -.16092500 03 ZP -.62796389 02 DXP .73802745 01 DYP-.25105321 01 DZP-.17749978 00
   R   .65619824 04 LAT .23485414 02 LON .29754250 03 VE  .73855131 01 PTE .57622043-02 AZE .11069334 03
   ALT .18722481 03 RNG .20867162 04 ARC .18757341 02 V   .77976104 01 PTH .54577282-02 AZ  .10955375 03
   GED .23627973 02 F   .16000000 05 DRG .00000000 00 N   .00000000 00 CHI .34120788 03 TAU .00000000 00
   XM  .00000000 00 YM  .00000000 00 ZM  .00000000 00 DXM .00000000 00 DYM .00000000 00 DZM .00000000 00
   XDD .20018461-01 YDD-.68117651-02 ZDD-.48145708-03 ALA .11396087 01 W   .74179999 04 PAY .73500000 04
   X  -.39702865 04 Y  -.45230454 04 Z   .26150522 04 DX  .48356627 01 DY -.56294931 01 DZ -.23933031 01
   DT  .00000000 00 DTP .38400000 04 DW  .54600000 02 C3 -.60685922 02 MCH .22027897 02 BTM .00000000 00

                                                                                  NOVEMBER 11,1964      16   1  26.024

   TIM .50114086 03 ACX .21151140-01 INA .00000000 00 DDX .17039044-01 DDY-.15583702-01 DDZ-.40808010-03
   XP  .21090600 04 YP -.16092500 03 ZP -.62796389 02 DXP .73802745 01 DYP-.25105321 01 DZP-.17749978 00
   R   .65619824 04 LAT .23485414 02 LON .29754250 03 VE  .73855131 01 PTE .57622043-02 AZE .11069334 03
   ALT .18722481 03 RNG .20867162 04 ARC .18757341 02 V   .77976104 01 PTH .54577282-02 AZ  .10955375 03
   GED .23627973 02 F   .16000000 05 DRG .00000000 00 N   .00000000 00 CHI .34120788 03 TAU .00000000 00
   XM  .00000000 00 YM  .00000000 00 ZM  .00000000 00 DXM .00000000 00 DYM .00000000 00 DZM .00000000 00
   XDD .20018461-01 YDD-.68117651-02 ZDD-.48145708-03 ALA .11396087 01 W   .74179999 04 PAY .73500000 04
   X  -.39702865 04 Y  -.45230454 04 Z   .26150522 04 DX  .48356627 01 DY -.56294931 01 DZ -.23933031 01
   DT  .20000000 01 DTP .20000000 01 DW  .54600000 02 C3 -.60685922 02 MCH .22027897 02 BTM .00000000 00

                                                                                  NOVEMBER 11,1964      16   1  26.024

   TIM .50114086 03 ACX .00000000 00 INA .00000000 00 DDX-.29794175-02 DDY-.87719370-02 DDZ .73376980-04
   XP  .21090600 04 YP -.16092500 03 ZP -.62796389 02 DXP .73802745 01 DYP-.25105321 01 DZP-.17749978 00
   R   .65619824 04 LAT .23485414 02 LON .29754250 03 VE  .73855131 01 PTE .57622043-02 AZE .11069334 03
   ALT .18722481 03 RNG .20867162 04 ARC .18757341 02 V   .77976104 01 PTH .54577282-02 AZ  .10955375 03
   GED .23627973 02 F   .00000000 00 DRG .00000000 00 N   .00000000 00 CHI .34121334 03 TAU .00000000 00
   XM  .00000000 00 YM  .00000000 00 ZM  .00000000 00 DXM .00000000 00 DYM .00000000 00 DZM .00000000 00
   XDD .00000000 00 YDD-.00000000 00 ZDD .00000000 00 ALA .11396087 01 W   .74179999 04 PAY .73500000 04
   X  -.39702865 04 Y  -.45230454 04 Z   .26150522 04 DX  .48356627 01 DY -.56294931 01 DZ -.23933031 01
   DT  .20000000 01 DTP .20000000 01 DW  .54600000 02 C3 -.60685922 02 MCH .22027897 02 BTM .00000000 00

COAST CONDITIONS

CONTROL FROM HORIZON .00000000 00
```

```
MTR  3            FRC .16000000 05 FE  .00000000 00 WG  .73499999 04 WPD .54600000 02 DIA        5.000
BRN .10000000 03 CST .00000000 00

                                                                    NOVEMBER 11,1964      16  36  44.024

TIM .26191409 04 ACX .21346824-01 INA .00000000 00 DDX-.23116394-01 DDY .26009837-02 DDZ .51266158-03
XP  .19172696 04 YP -.12648724 05 ZP -.70460300 02 DXP-.74514708 01 DYP-.22833008 01 DZP .16454056 00
R   .65630899 04 LAT-.30168032 02 LON .69058147 02 VE  .73815056 01 PTE .64770276-02 AZE .88815615 02
ALT .19036506 03 RNG .18124228 05 ARC .16294335 03 V   .77951878 01 PTH .61334562-02 AZ  .88878525 02
GED-.30337382 02 F   .16000000 05 DRG .00000000 00 N   .00000000 00 CHI .19703012 03 TAU .00000000 00
XM -.00000000 00 YM -.00000000 00 ZM  .00000000 00 DXM-.00000000 00 DYM-.00000000 00 DZM .00000000 00
XDD-.20406237-01 YDD-.62505472-02 ZDD .45060643-03 ALA .63719410-01 W   .73499998 04 PAY .59309999 04
X   .56029189 04 Y   .89628493 03 Z  -.32981997 04 DX -.11546645 01 DY  .77080745 01 DZ  .13148466 00
DT  .10000000 02 DTP .80000000 01 DW  .54600000 02 C3 -.60703196 02 MCH .22015944 02 BTM .00000000 00

                                                                    NOVEMBER 11,1964      16  38  20.919

TIM .27160354 04 ACX .76265177-01 INA .36570158 01 DDX-.76699529-01 DDY-.30940797-02 DDZ .17024478-02
XP  .10481314 04 YP -.12862313 05 ZP -.51254620 02 DXP-.11223964 02 DYP-.22057011 01 DZP .24821121 00
R   .65738077 04 LAT-.29706805 02 LON .77657387 02 VE  .11027286 02 PTE .19748092 01 AZE .84158187 02
ALT .20093200 03 RNG .18993619 05 ARC .17075748 03 V   .11441333 02 PTH .19033167 01 AZ  .84370537 02
GED-.29874589 02 F   .16000000 05 DRG .00000000 00 N   .00000000 00 CHI .18921418 03 TAU .00000000 00
XM -.13614486 03 YM -.34359609 02 ZM  .30094720 01 DXM-.35654766 01 DYM-.79376180 00 DZM .78879590-01
XDD-.75221566-01 YDD-.12202346-01 ZDD .16674403-02 ALA .56799152 00 W   .20595561 04 PAY .64055615 03
X   .54275138 04 Y   .17732031 04 Z  -.32577282 04 DX -.26919160 01 DY  .11092336 02 DZ  .78597572 00
DT  .20000000 01 DTP .36448013-03 DW  .54600000 02 C3  .96339908 01 MCH .32889783 02 BTM .96894561 02

CONIC - HYPERBOLA
MOM .75171626 11ENR .48169955 07ECC .11587216 01AXS .41374669 08 PDT.24218700 08 ANM.35459606 01 RTA  .15944508 03
MAX.14965739 03 PGE.65670523 07 EXV.31038671 04 VPG.11446783 05 TPG.16212084 03                 DCL  .27315172 02
INTEGRATED SYSTEM
                 XI            ETA           ZETA           S M            B
   .22074344 00-.97507443 00-.22410427-01-.68308401 00-.98686046 00-.72999593 00
  -.97531062 00-.22083219 00 .15347766-02 .73015493 00-.16008724 00-.68327992 00
  -.64454650-02 .21518336-01-.99974769 00 .16432976-01 .21875786-01 .15314703-01
VERNAL EQUINOX SYSTEM
       XI            ETA           ZETA           S             M             B
   .84030328 00-.21127897 00 .49925102 00-.83193061 00-.26284655 00 .24215771 00
   .20977989 00 .97591138 00 .59911389-01 .31195534 00 .96106829 00 .94820555 00
  -.49988276 00 .54389082-01 .86438362 00 .45888483 00 .85202297-01-.20558672 00

INJECTION TIME =      .59900919 05
```

```
CASE  3                                          SPACE TRAJECTORIES                                                    1

EARTH-MARS,EXTENDED SEARCH                                CHECK 3
 EPHEMERIS TAPE III WITH SATURN.            B-8 IS T-1456

  GME  .39860320 06     J  .16234500-02     H -.57499999-05     D  .78749999-05    RE  .63781650 04   REM  .63783149 04
    G  .66709998-19     A  .88745998 29     B  .88763998 29     C  .88800998 29   OME  .41780741-02    AU  .14959900 09
  GMM  .49007589 04   GMS  .13271544 12   GMV  .32476950 06   GMA  .42977799 05   GMC  .37918700 08   GMJ  .12671060 09

INJECTION CONDITIONS              MARS              JULIAN DATE 2438711.19329767              NOV. 11,1964   16 38 20.919

GEOCENTRIC        XO .54275138 04  YO .17732031 04  ZO-.32577282 04 DXO-.26919160 01 DYO .11092336 02 DZO .78597572 00
CARTESIAN        GMC .00000000 00 SGC .00000000 00  TO .59900919 05 GHA .30043514 03 GHO .50164659 02

   0 DAYS  0 HRS.  0 MIN.  0.000 SEC.              JULIAN DATE 2438711.19329767              NOV. 11,1964   16 38 20.919
                                              TFL    0 DAYS 16 HRS. 38 MIN. 20.919 SEC.

       GEOCENTRIC                                                                                   EQUATORIAL COORDINATES

    X  .54275135 04     Y  .17732030 04     Z -.32577281 04    DX -.26919159 01    DY  .11092336 02    DZ  .78597573 00
    R  .65738074 04   DEC -.29706806 02    RA  .18092543 02     V  .11441332 02   PTH  .19033176 01    AZ  .84370539 02
    R  .65738072 04   LAT -.29706807 02   LON  .77657402 02    VE  .11027286 02   PTE  .19748100 01   AZE  .84158197 02
   XS -.96483315 08    YS -.10304232 09    ZS -.44684943 08   DXS  .23091413 02   DYS -.17704878 02   DZS -.76785032 01
   XM  .25830517 06    YM -.26975312 06    ZM -.14601804 06   DXM  .71544972 00   DYM  .62814318 00   DZM  .20900296 00
   XT -.20584449 09    YT  .93773983 08    ZT  .48582283 08   DXT  .23838193 01   DYT -.25932847 02   DZT -.10896740 02
   RS  .14806584 09    VS  .30093778 02    RM  .40101069 06    VM  .97473811 00    RT  .23135632 09    VT  .28230020 02
  GED -.29874591 02   ALT  .20090448 03   LOS  .28644766 03   RAS  .22688280 03   RAM  .31375806 03   LOM  .13322918 02
  DUT  .35000000 02    DT  .15000000 02    DR  .38000171 00   SHA  .53730202 04   DES -.17565207 02   DEM -.21353746 02
  DAC  .00000000 00

                                                   GEOCENTRIC CONIC

EPOCH OF PERICENTER PASSAGE                       JULIAN DATE 2438711.19288645              NOV. 11,1964   16 37 45.390
  SMA -.41374747 05   ECC  .11587213 01     B  .24218718 05   SLR  .14176435 05   APO  .00000000 00   RCA  .65670523 04
   VH  .31038642 01    C3  .96339729 01    C1  .75171620 05   TFP  .35529058 02    TF -.41121595-03   LTF -.23139770-01
   TA  .35458435 01   MTA  .14965741 03    EA  .96180589 00    MA  .15271218 00                       TFI  .00000000 00
  ZAE  .68784153 02   ZAP  .96444280 02   ZAC  .46371031 02   DEF  .11931483 03    IR  .17114563 05    GP -.39266680 02

                                                   ALL VECTORS REFERENCED TO EARTH EQUATOR PLANE
    X  .54275135 04     Y  .17732030 04     Z -.32577281 04    DX -.26919159 01    DY  .11092336 02    DZ  .78597573 00
  INC  .30187603 02   LAN  .96842911 02   APF  .27620966 03    MX -.26284654 00    MY  .96106827 00    MZ  .85202304-01
   WX  .49925103 00    WY  .59911387-01    WZ  .86438361 00    PX  .84030282 00    PY  .20978187 00    PZ -.49988265 00
   QX -.21128067 00    QY  .97591092 00    QZ  .54390102-01    RX -.42967090 00    RY  .16111626 00    RZ -.88849558 00
   BX  .24215559 00    BY  .94820634 00    BZ -.20558556 00    TX  .35110372 00    TY  .93633658 00    TZ  .00000000 00
  SXI  .61846594 00   SYI  .67404614 00   SZI -.40393269 00   DAI -.23824261 02   RAI  .47462295 02
  SXO -.83193091 00   SYO  .31195410 00   SZO  .45888510 00   DAO  .27315189 02   RAO  .15944516 03
  ETE  .18429136 03   ETS  .20809124 03   ETC  .30873475 03
  B.T  .22884261 05   B.R  .79282355 04     B  .24218718 05   THA  .19108607 02

                                                   ALL VECTORS REFERENCED TO ORBIT PLANE OF TARGET
    X  .21746104 04     Y -.50760306 04     Z -.35665002 04    DX  .88340804 01    DY  .60866731 01    DZ -.39768719 01
  INC  .39411315 02   LAN  .61382297 02   APF  .23516290 03    MX -.57708272-01    MY  .91407409 00    MZ  .40139215 00
   WX  .55732267 00    WY -.30408557 00    WZ  .77260820 00    PX  .28306604 00    PY -.80518897 00    PZ -.52109914 00
   QX  .78055431 00    QY  .50911950 00    QZ -.36267376 00    RX  .41481742-01    RY  .26325973 00    RZ -.96383273 00
   BX  .81663058 00    BY  .32624290-01    BZ -.57623795 00    TX  .98781239 00    TY -.15564925 00    TZ  .00000000 00
  SXI  .63860347 00   SYI -.43770338 00   SZI -.63293074 00   DAI -.39266678 02   RAI  .32557298 03
  SXO  .15001984 00   SYO  .95208591 00   SZO  .26650783 00   DAO  .15456567 02   RAO  .81045544 02
  ETE  .16149830 03   ETS  .18529817 03   ETC  .28594171 03
  B.T  .24168684 05   B.R -.15563365 04     B  .24218742 05   THA  .35631553 03

   8 DAYS 18 HRS. 37 MIN. 27.577 SEC.              JULIAN DATE 2438719.96931130              NOV. 20,1964   11 15 48.497
                                              TFL    9 DAYS 11 HRS. 15 MIN. 48.497 SEC.
```

CASE 3 SPACE TRAJECTORIES 2

EARTH-MARS,EXTENDED SEARCH CHECK 3

HELIOCENTRIC ECLIPTIC COORDINATES

X	.75839233 08	Y	.12675255 09	Z	.72959650 06	DX	-.28399698 02	DY	.17040167 02	DZ	.92694449 00
R	.14771029 09	LAT	.28300718 00	LON	.59106858 02	V	.33132603 02	PTH	.79021019-01	AZ	.88397203 02
XE	.77916550 08	YE	.12556818 09	ZE	.21000000 03	DXE	-.25786668 02	DYE	.15596045 02	DZE	-.12030601-02
XT	-.12476309 09	YT	.21041511 09	ZT	.74880119 07	DXT	-.19898584 02	DYT	-.10308532 02	DZT	.26997915 00
LTE	.81420159-04	LDE	.58179905 02	LTT	.17533001 01	LDT	.12066530 03	RST	.24473745 09	VST	.22411880 02
EPS	.91068664 02	ESP	.96909388 00	SEP	.87962168 02	EPM	.82792924 01	EMP	.90170410 02	MEP	.81550293 02
MPS	.99321901 02	MSP	.94382735 00	SMP	.79734199 02	SEM	.16858321 03	EMS	.11389226 02	ESM	.27088086-01
EPT	.16330935 03	ETP	.18714980 00	TEP	.16503523 02	TPS	.81758767 02	TSP	.61563507 02	STP	.36677719 02
SET	.80900678 02	STE	.36599947 02	EST	.62499369 02	RPM	.24728736 07	RPT	.21745435 09	SPN	.90922490 02
GCE	.83205787 02	GCT	.27833695 03	SIP	.81757871 02	CPT	.83251780 02	SIN	.83250884 02	D1	.46906396-03
REP	.24999996 07	VEP	.31264795 01	CPE	.83123112 02	CPS	.99626420 02	D2	.37619656-03	D3	.98473506-08

HELIOCENTRIC CONIC

EPOCH OF PERICENTER PASSAGE JULIAN DATE 2438719.57731583 NOV. 20,1964 01 51 20.088

SMA	.18981039 09	ECC	.22180486 00	B	.18508243 09	SLR	.18047221 09	APO	.23191125 09	RCA	.14770952 09
VH	.21102993 02	C3	-.69920009 03	C1	.48940218 10	TFP	.33868409 05	TF	.83840180 01	PER	.52201785 03
TA	.43527684 00	MTA	.00000000 00	EA	.34738384 00	MA	.27033246 00			TFI	.87760136 01

ALL VECTORS REFERENCED TO ECLIPTIC PLANE

X	.75839233 08	Y	.12675255 09	Z	.72959650 06	DX	-.28399698 02	DY	.17040167 02	DZ	.92694449 00
INC	.16275956 01	LAN	.49095902 02	APF	.95796338 01	MX	-.79142960 00	MY	.50579892 00	MZ	.26407155-01
WX	.21467034-01	WY	-.18598012-01	WZ	.99959655 00	PX	.51993465 00	PY	.85419311 00	PZ	.47267460-02
QX	-.85393638 00	QY	.51962341 00	QZ	.28006743-01	RX	.24576262-02	RY	.40375984-02	RZ	-.99998895 00
BX	.85393630 00	BY	-.51962335 00	BZ	-.28006740-01	TX	.85420255 00	TY	-.51994040 00	TZ	.00000000 00
DAP	.27082468 00	RAP	.58671747 02								
B.T	.18500982 09	B.R	.51836140 07	B	.18508243 09	THA	.16048976 01				

ALL VECTORS REFERENCED TO ORBIT PLANE OF TARGET

X	.14680436 09	Y	-.16334078 08	Z	-.84242000 05	DX	.37091769 01	DY	.32924080 02	DZ	-.12733585 00
INC	.22227654 00	LAN	.16520862 03	APF	.18800729 03	MX	-.78400755 00	MY	.51308534 00	MZ	-.11495402-02
WX	.99172105-03	WY	.37558047-02	WZ	.99999247 00	PX	.99299822 00	PY	-.11812897 00	PZ	-.54111193-03
QX	.11812605 00	QY	.99299126 00	QZ	-.38466584-02	RX	-.53732320-03	RY	.63921001-04	RZ	-.99999995 00
BX	-.11812604 00	BY	-.99299116 00	BZ	.38466579-02	TX	-.11812898 00	TY	-.99299826 00	TZ	.00000000 00
DAP	-.31004789-01	RAP	.35321587 03								
B.T	.18508101 09	B.R	-.71194877 06	B	.18508238 09	THA	.35977960 03				

251 DAYS 11 HRS. 37 MIN. 23.456 SEC. JULIAN DATE 2438962.67759693 JULY 21,1965 04 15 44.375

TFL 252 DAYS 4 HRS. 15 MIN. 44.375 SEC.

CASE 3 SPACE TRAJECTORIES 3

EARTH-MARS,EXTENDED SEARCH CHECK 3

HELIOCENTRIC ECLIPTIC COORDINATES

X	-.14398472 09	Y	-.17911097 09	Z	-.27400150 06	DX	.16086563 02	DY	-.13918323 02	DZ	-.59712559 00
R	.22980952 09	LAT	-.68314697-01	LON	.23120469 03	V	.21280362 02	PTH	.20726269 01	AZ	.91606509 02
XE	.71813072 08	YE	-.13396590 09	ZE	.29150000 03	DXE	.25773185 02	DYE	.13957341 02	DZE	-.67520142-03
XT	-.14594346 09	YT	-.17950971 09	ZT	-.20834050 06	DXT	.19739373 02	DYT	-.13223797 02	DZT	-.76193517 00
LTE	.10987978-03	LOE	.29819375 03	LTT	-.51598663-01	LOT	.23088848 03	RST	.23135098 09	VST	.23771668 02
EPS	.39388756 02	ESP	.66989062 02	SEP	.73622179 02	EPM	.15639313-01	EMP	.10424751 02	MEP	.16955693 03
MPS	.39371929 02	MSP	.67134409 02	SMP	.73493658 02	SEM	.96747500 02	EMS	.83106773 02	ESM	.14570608 00
EPT	.17802294 03	ETP	.19592839 01	TEP	.17132009-01	TPS	.14026089 03	TSP	.31667236 00	STP	.39422453 02
SET	.73619392 02	STE	.39075341 02	EST	.67305266 02	RPM	.22085255 09	RPT	.19999972 07	SPN	.39387099 02
GCE	.25853118 03	GCT	.81586307 02	SIP	.14016348 03	CPT	.91096456 02	SIN	.90999052 02	D1	.51000145-01
REP	.22046958 09	VEP	.29516759 02	CPE	.90721253 02	CPS	.81648787 02	D2	.39439357-01	D3	.10546662-03

HELIOCENTRIC CONIC

EPOCH OF PERICENTER PASSAGE JULIAN DATE 2438719.61616175 NOV. 20,1964 02 47 16.375

SMA	.18901293 09	ECC	.21871006 00	B	.18443685 09	SLR	.17997167 09	APO	.23035196 09	RCA	.14767390 09
VH	.21216360 02	C3	-.70215006 03	C1	.48872303 10	TFP	.21000508 08	TF	.84228642 01	PER	.51873156 03
TA	.17255436 03	MTA	.00000000 00	EA	.17070810 03	MA	.16868477 03			TFI	.25148430 03

ALL VECTORS REFERENCED TO ECLIPTIC PLANE

X	-.14398472 09	Y	-.17911097 09	Z	-.27400150 06	DX	.16086563 02	DY	-.13918323 02	DZ	-.59712559 00
INC	.16079536 01	LAN	.48770408 02	APF	.98808730 01	MX	.72004635 00	MY	-.61972561 00	MZ	-.26667302-01
WX	.21103589-01	WY	-.18494054-01	WZ	.99960623 00	PX	.52029605 00	PY	.85397199 00	PZ	.48151859-02
QX	-.85372479 00	QY	.51998957 00	QZ	.27644258-01	RX	.25053521-02	RY	.41120829-02	RZ	-.99998806 00
BX	.85372506 00	BY	-.51998974 00	BZ	-.27644267-01	TX	.85398218 00	TY	-.52030226 00	TZ	.00000000 00
DAP	.27589097 00	RAP	.58647472 02								
B.T	.18436635 09	B.R	.50986785 07	B	.18443683 09	THA	.15841211 01				

ALL VECTORS REFERENCED TO ORBIT PLANE OF TARGET

X	-.22980600 09	Y	-.12697940 07	Z	-.26091000 05	DX	-.65212512 00	DY	-.21270177 02	DZ	.89952169-01
INC	.24278761 00	LAN	.18185260 03	APF	.18590957 03	MX	.71324900 00	MY	-.62657637 00	MZ	.27501014-02
WX	-.13692437-03	WY	.42331879-02	WZ	.99999102 00	PX	.99083701 00	PY	.13506087 00	PZ	-.43607220-03
QX	-.13506150 00	QY	.99082807 00	QZ	-.42128922-02	RX	-.43207660-03	RY	-.58896305-04	RZ	-.99999969 00
BX	.13506152 00	BY	-.99082826 00	BZ	.42128930-02	TX	.13506090 00	TY	-.99083730 00	TZ	.00000000 00
DAP	-.24985685-01	RAP	.77621432 01								
B.T	.18443521 09	B.R	-.77701263 06	B	.18443685 09	THA	.35975862 03				

257 DAYS 7 HRS. 53 MIN. 23.456 SEC. JULIAN DATE 2438968.52204138 JULY 27,1965 00 31 44.375

TFL 258 DAYS 0 HRS. 31 MIN. 44.375 SEC.

RECTIFICATION .16990073-01 .88869010 03 .27501838 04 .12578738 04

257 DAYS 16 HRS. 21 MIN. 2.240 SEC. JULIAN DATE 2438968.87457360 JULY 27,1965 08 59 23.159

TFL 258 DAYS 8 HRS. 59 MIN. 23.159 SEC.

CASE 3 SPACE TRAJECTORIES 4

EARTH-MARS,EXTENDED SEARCH CHECK 3

GEOCENTRIC — EQUATORIAL COORDINATES

X	-.22036296 09	Y	-.55275822 08	Z	-.24618717 08	DX	-.75474227 01	DY	-.27001983 02	DZ	-.12571504 02
R	.22851987 09	DEC	-.61845449 01	RA	.19408152 03	V	.30726428 02	PTH	.29571490 02	AZ	.11431083 03
R	.22851986 09	LAT	-.61845449 01	LON	.11440331 03	VE	.16542604 05	PTE	.52521592-01	AZE	.26996189 03
XS	-.85202543 08	YS	.11539345 09	ZS	.50041890 08	DXS	-.24189215 02	DYS	-.15234771 02	DZS	-.66057524 01
XM	-.11165000 06	YM	.30441500 06	ZM	.15228050 06	DXM	-.10322705 01	DYM	-.36806488 00	DZM	-.74123739-01
XT	-.22035617 09	YT	-.55291007 08	ZT	-.24648459 08	DXT	-.36369213 01	DYT	-.26093969 02	DZT	-.12142828 02
RS	.15191877 09	VS	.29340285 02	RM	.35822278 06	VM	.10984300 01	RT	.22852021 09	VT	.29009838 02
GED	-.62263614 01	ALT	.22851349 09	LOS	.46762657 02	RAS	.12644088 03	RAM	.11014148 03	LOM	.30463254 02
DUT	.35000000 02	DT	.48000000 03	DR	.15163773 02	SHA	-.21637936 09	DES	.19232300 02	DEM	.25156993 02
DAC	.00000000 00										

HELIOCENTRIC — ECLIPTIC COORDINATES

X	-.13516042 09	Y	-.18628434 09	Z	-.59451500 06	DX	.16641792 02	DY	-.13169318 02	DZ	-.79154569 00
R	.23015331 09	LAT	-.14800422 00	LON	.23403687 03	V	.21236919 02	PTH	.23967031 01	AZ	.92131712 02
XE	.85202543 08	YE	-.12577695 09	ZE	-.23750000 03	DXE	.24189215 02	DYE	.16605246 02	DZE	-.89198350-03
XT	-.13515363 09	YT	-.18631010 09	ZT	-.61576100 06	DXT	.20552293 02	DYT	-.12165711 02	DZT	-.75952184 00
LTE	-.89572521-04	LOE	.30411410 03	LTT	-.15328054 00	LOT	.23404200 03	RST	.23017024 09	VST	.23895149 02
EPS	.38682828 02	ESP	.70077297 02	SEP	.71239875 02	EPM	.89841023-01	EMP	.92730530 02	MEP	.87179753 02
MPS	.38593233 02	MSP	.70114426 02	SMP	.71292339 02	SEM	.16196798 02	EMS	.16376543 03	ESM	.36342480-01
EPT	.90560084 02	ETP	.89431369 02	TEP	.98911702-02	TPS	.11977640 03	TSP	.98911702-02	STP	.60216232 02
SET	.71246558 02	STE	.38681271 02	EST	.70072168 02	RPM	.22850252 09	RPT	.34076947 05	SPN	.38681229 02
GCE	.25893401 03	GCT	.30477993 03	SIP	.11405023 03	CPT	.65602338 02	SIN	.59876169 02	D1	.30082367 01
REP	.22851987 09	VEP	.30726428 02	CPE	.89930727 02	CPS	.81175539 02	D2	.16277761 01	D3	.17264289 00

AREOCENTRIC — ECLIPTIC COORDINATES

X	-.67863039 04	Y	.25764558 05	Z	.21245516 05	DX	-.39105015 01	DY	-.10036069 01	DZ	-.32023880-01
R	.34076946 05	DEC	.38569034 02	RA	.10475636 03	V	.40373597 01	PTH	.72692231-07	AZ	.90581269 02
ALT	.30676946 05	SHA	-.29575593 05	ALP	.26900066 02	DR	-.14328785-07	DP	.67882744-02	ASD	.57261685 01
HGE	.32131717 03	SVL	-.38516626 02	HNG	.23060133 03	SIA	.84833916 02				

AREOCENTRIC CONIC

EPOCH OF PERICENTER PASSAGE — JULIAN DATE 2438968.87457360 — JULY 27,1965 08 59 23.159

SMA	-.31193341 04	ECC	.11924430 02	B	.37065253 05	SLR	.44042511 06	APO	.00000000 00	RCA	.34076947 05
VH	.37118562 01	C3	.13777876 02	C1	.13758089 06	TFP	-.35439513-04	TF	.25768127 03	LTF	.25765716 03
TA	-.68301891-05	MTA	.94810555 02	EA	-.00000000 00	MA	-.24162375-05			TFI	.25768127 03
ZAE	.17455616 03	ZAP	.13651912 03	ZAC	.91524649 02	DEF	.96211177 01	IR	.57246372 04	GP	.13872054 01

ALL VECTORS REFERENCED TO ECLIPTIC PLANE

X	-.67863039 04	Y	.25764558 05	Z	.21245516 05	DX	-.39105015 01	DY	-.10036069 01	DZ	-.32023880-01
INC	.38572729 02	LAN	.13824080 02	APF	.90728896 02	MX	-.87681458 00	MY	-.28572736 00	MZ	-.54185642-01
WX	.14898191 00	WY	-.60544703 00	WZ	.78181732 00	PX	-.19914648 00	PY	.75607003 00	PZ	.62345714 00
QX	-.96857888 00	QY	-.24857999 00	QZ	-.79318866-02	RX	-.43618340-01	RY	-.81872802-02	RZ	-.99901471 00
BX	-.11721853 00	BY	.77425300 00	BZ	.62192614 00	TX	-.18448099 00	TY	.98283609 00	TZ	.00000000 00
SXI	-.98186770 00	SYI	-.18429922 00	SZI	.44380076-01	DAI	.25436256 01	RAI	.19063087 03		
SXO	-.94846628 00	SYO	-.31110948 00	SZO	-.60187969-01	DAO	-.34506021 01	RAO	.19816017 03		
ETE	.15035869 03	ETS	.17709179 03	ETC	.25585601 03						
B.T	.29006836 05	B.R	-.23074584 05	B	.37065253 05	THA	.32149817 03				

CASE 3

SPACE TRAJECTORIES

EARTH-MARS,EXTENDED SEARCH

CHECK 3

215523224265	213666714736	614630130361	602523644121	204543166645	200624246445
	641101100		0		220723763532

```
                    EARTH-MARS,EXTENDED SEARCH                          CHECK 3
              TIME ON  012045       TIME OFF  012073
                                MONITOR CONTROL WORDS
 EXTEND    SEARCH    PARTIA    OBO
                 INDEPENDENT VARIABLES OF THE SEARCH
 TMLNCH    TCM2
                 DEPENDENT VARIABLES OF THE SEARCH
 B.T       B.R
     .24150000 05            -.64749999 04
 215523224265   213666714736   614630130361   602523644121   204543166645   200624246445
        641101100                   0        220723763532
```

```
*       DATA
    230 BCD 1EXTEND
    231 BCD 1SEARCH
   1121 DEC 1,2
    200 BCD 2TMLNCHTCM2
    206 BCD 2B.T    B.R
    980 BCD 4L3Z5T2L3GENAPAD 12DRAG 1
    212 DEC 24150.,-6475.
   1119 DEC 0
    232 BCD 1PARTIALS
    233 BCD 10BO
        TRA 3,4
    100 BCD  EARTH-MARS,EXTENDED SEARCH                          CHECK 3
    350 DEC 9.,10.26,2.
    390 DEC 11,1,1964,68293.
    923 DEC 1614.3
    933 DEC 100.
    993 DEC 1
    683 OCT 76140
    693 DEC .10359E8
    110 BCD 2MARS  EARTH
   RHOD+100500.,500.
    350 DEC 12.,10.26,2.
    390 DEC 11,11,1964,57247.
    923 DEC 2118.0
    693 DEC .9634E7
        TRA 3,4
        TRA 180
EOF
```

Check Case 4

Check case 4 is an Earth-Moon trajectory with injection occurring on August 6, 1963, and lunar impact occurring at a lunar latitude of 0.229 deg and longitude of 311.06 deg.

A time of flight (T_F) of 66.485 hr and a $\overline{B}\cdot\overline{T}$ and $\overline{B}\cdot\overline{R}$ of 100 km were desired so a "search" was made varying x, y, and z at injection. The final conditions were

$$TF = 66.485127 \text{ hr}$$
$$\overline{B}\cdot\overline{T} = 100.29800 \text{ km}$$
$$\overline{B}\cdot\overline{R} = 99.961635 \text{ km}$$

which is within specified tolerances.

A minimum of output was desired so the canned values of the phasing parameters were used.

The approximate running time on an IBM 7094 is 2.3 min.

```
*   ADR,1011010,45[illegible]13120   4   012074   011010 +   06/28/63   ********************
CHECK CASE 4
```

```
*      HIT START AFTER OCTAL 150 STOP
*     XEQ
```

ENTRY NAME	ENTRY ADD.	NO. OF TRANSFERS	LOAD ADD.
MAIN	00144	00000	00144

LOGICAL TAPE	MACHINE TAPE	TOTAL WRITES	TOTAL READS	NOISE RECORDS WRITING	NOISE RECORDS READING	TOTAL REDUNDANCIES WRITING	TOTAL REDUNDANCIES READING	POSITIONING ERRORS
1	A 1	0	5	0	0	0	0	0
5	A 2	0	11	0	0	0	0	0
6	A 3	15	0	0	0	0	0	0
7	B 4	6	5	0	0	0	0	0

EXECUTION

```
CASE  1                                          SPACE TRAJECTORIES                                                  1

EARTH-MOON,3X3 SEARCH                                  CHECK 4
 EPHEMERIS TAPE III WITH SATURN.          B-8 IS T-1456

  GME  .39860320 06     J  .16234500-02     H -.57499999-05     D  .78749999-05    RE  .63781650 04   REM  .63783149 04
    G  .66709998-19     A  .88745998 29     B  .88763998 29     C  .88800998 29   OME  .41780741-02    AU  .14959900 09
  GMM  .49007589 04   GMS  .13271544 12   GMV  .32476950 06   GMA  .42977799 05   GMC  .37918700 08   GMJ  .12671060 09

INJECTION CONDITIONS              MOON              JULIAN DATE 2438248.21175586                AUG. 6,1963   17 04 55.707

GEOCENTRIC        X0-.61066759 04  Y0-.23620297 04  Z0-.55352181 03 DX0 .35627328 01 DY0-.87922522 01 DZ0-.54547869 01
CARTESIAN        GMC .00000000 00 SGC .00000000 00  TO .61495706 05 GHA .21074440 03 GHO .31381078 03

   0 DAYS  0 HRS.  0 MIN.  0.000 SEC.              JULIAN DATE 2438248.21175586                AUG. 6,1963   17 04 55.707

        GEOCENTRIC                                                                                  EQUATORIAL COORDINATES

    X -.61066757 04     Y -.23620296 04     Z -.55352180 03    DX  .35627326 01    DY -.87922516 01    DZ -.54547867 01
    R  .65709252 04   DEC -.48322111 01    RA  .20114620 03     V  .10943100 02   PTH  .16181000 01    AZ  .11987157 03
    R  .65709251 04   LAT -.48322111 01   LON  .35040180 03    VE  .10531934 02   PTE  .16812886 01   AZE  .12116592 03
   XS -.10447151 09    YS  .10094913 09    ZS  .43774604 08   DXS -.21109277 02   DYS -.18709437 02   DZS -.81140054 01
   XM  .32552863 06    YM -.16238945 06    ZM -.94397222 05   DXM  .48530311 00   DYM  .87985689 00   DZM  .30392435 00
   XT  .32552863 06    YT -.16238945 06    ZT -.94397222 05   DXT  .48530311 00   DYT  .87985689 00   DZT  .30392435 00
   RS  .15172752 09    VS  .29351008 02    RM  .37583248 06    VM  .10497796 01    RT  .37583248 06    VT  .10497796 01
  GED -.48649840 01   ALT  .19287213 03   LOS  .28523796 03   RAS  .13598236 03   RAM  .33348775 03   LOM  .12274336 03
  DUT  .35000000 02    DT  .15000000 02    DR  .30900500 00   SHA -.60875968 04   DES  .16768653 02   DEM -.14546658 02
  DAC  .00000000 00

                                                   GEOCENTRIC CONIC

EPOCH OF PERICENTER PASSAGE                       JULIAN DATE 2438248.21135838                AUG. 6,1963   17 04 21.364
  SMA  .25358706 06   ECC  .97410902 00     B  .57330651 05   SLR  .12961242 05   APO  .50060850 06   RCA  .65656161 04
   VH  .14358050 00    C3 -.15718594 01    C1  .71877622 05   TFP  .34343085 02    TF -.95397459-02   PER  .21181117 05
   TA  .32792211 01   MTA  .00000000 00    EA  .37564161 00    MA  .97284062-02   C3J -.19881849 01   TFI  .00000000 00

                                                                  ALL VECTORS REFERENCED TO EARTH EQUATOR PLANE
    X -.61066757 04     Y -.23620296 04     Z -.55352180 03    DX  .35627326 01    DY -.87922516 01    DZ -.54547867 01
  INC  .30224248 02   LAN  .12802531 02   APF  .18635413 03    MX  .35195158 00    MY -.79361763 00    MZ -.49628734 00
   WX  .11154604 00    WY -.49087132 00    WZ  .86406182 00    PX -.94795852 00    PY -.31348174 00    PZ -.55711492-01
   QX  .29821478 00    QY -.81288037 00    QZ -.50029330 00    RX  .52894335-01    RY  .17491703-01    RZ -.99844687 00
   BX -.29821479 00    BY  .81288040 00    BZ  .50029332 00    TX -.31396938 00    TY  .94943311 00    TZ  .00000000 00
  DAP -.31936863 01   RAP  .19829860 03
  B.T  .49614283 05   B.R -.28726756 05     B  .57330651 05   THA  .32992908 03

                                                                  ALL VECTORS REFERENCED TO ORBIT PLANE OF TARGET
    X  .41297070 04     Y  .51082779 04     Z -.16756029 03    DX -.82548937 01    DY  .70211491 01    DZ -.15204086 01
  INC  .80828276 01   LAN  .22069919 03   APF  .18716985 03    MX  .34691618 00    MY -.92783911 00    MZ  .13202517 00
   WX -.91686443-01    WY  .10659833 00    WZ  .99006584 00    PX  .67163559 00    PY  .74067372 00    PZ -.17549034-01
   QX -.73518646 00    QY  .66335446 00    QZ -.13950497 00    RX -.11788372-01    RY -.13000111-01    RZ -.99984595 00
   BX  .73518649 00    BY -.66335449 00    BZ  .13950498 00    TX  .74078784 00    TY -.67173907 00    TZ  .00000000 00
  DAP -.10055370 01   RAP  .47798568 02
  B.T  .56769814 05   B.R -.79991358 04     B  .57330602 05   THA  .35197955 03
```

CASE 1 SPACE TRAJECTORIES 2

EARTH-MOON,3X3 SEARCH CHECK 4

HELIOCENTRIC ECLIPTIC COORDINATES

X	.10446541 09	Y	-.11003394 09	Z	.70100000 03	DX	.24672009 02	DY	.10156514 02	DZ	-.15057296 01
R	.15172504 09	LAT	.26471793-03	LON	.31351290 03	V	.26723211 02	PTH	.21102621 02	AZ	.93462627 02
XE	.10447151 09	YE	-.11003155 09	ZE	.26900000 03	DXE	.21109277 02	DYE	.20393138 02	DZE	.89174508-03
XT	.10479704 09	YT	-.11021809 09	ZT	-.21731000 05	DXT	.21594580 02	DYT	.21321280 02	DZT	-.70312797-01
LTE	.10158055-03	LOE	.31351519 03	LTT	-.81867271-02	LOT	.31355574 03	RST	.15208697 09	VST	.30346793 02
EPS	.11211052 03	ESP	.27453512-18	SEP	.67887175 02	EPM	.50291133 02	EMP	.77062891 00	MEP	.12893820 03
MPS	.16224045 03	MSP	.43114612-01	SMP	.17715878 02	SEM	.16300445 03	EMS	.16954157 02	ESM	.41377734-01
EPT	.50291133 02	ETP	.77062891 00	TEP	.12893820 03	TPS	.16224045 03	TSP	.43114612-01	STP	.17715878 02
SET	.16300445 03	STE	.16954157 02	EST	.41377734-01	RPM	.37999656 06	RPT	.37999656 06	SPN	.36028860 02
GCE	.28106039 03	GCT	.28815217 03	SIP	.16197839 03	CPT	.96371967 02	SIN	.96109910 02	D1	.13721320 00
REP	.65709252 04	VEP	.10943100 02	CPE	.84659959 02	CPS	.77642720 02	D2	.13088696 00	D3	.19645947-02

HELIOCENTRIC CONIC

EPOCH OF PERICENTER PASSAGE JULIAN DATE 2438170.03445624 MAY 20,1963 12 49 37.019

SMA	.12819152 09	ECC	.39870002 00	B	.11756205 09	SLR	.10781398 09	APO	.17930148 09	RCA	.77081559 08
VH	.21096692 02	C3	-.10352903 04	C1	.37826683 10	TFP	.67545187 07	TF	-.18762552 04	PER	.28973059 03
TA	.13654288 03	MTA	.00000000 00	EA	.11741607 03	MA	.97137922 02			TFI	.00000000 00

ALL VECTORS REFERENCED TO ECLIPTIC PLANE

X	.10446541 09	Y	-.11003394 09	Z	.70100000 03	DX	.24672009 02	DY	.10156514 02	DZ	-.15057296 01
INC	.34626201 01	LAN	.13351727 03	APF	.43452724 02	MX	.65214460 00	MY	.69989743 00	MZ	-.57775661-01
WX	.43798246-01	WY	.41588088-01	WZ	.99817441 00	PX	-.99769140 00	PY	.53723327-01	PZ	.41538715-01
QX	-.51897741-01	QY	-.99768934 00	QZ	.43845066-01	RX	-.41478624-01	RY	.22335260-02	RZ	-.99913679 00
BX	.51897747-01	BY	.99768946 00	BZ	-.43845072-01	TX	.53769742-01	TY	.99855337 00	TZ	.00000000 00
DAP	.23806778 01	RAP	.17691773 03								
B.T	.11744879 09	B.R	.51589683 07	B	.11756204 09	THA	.25151172 01				

ALL VECTORS REFERENCED TO ORBIT PLANE OF TARGET

X	-.14509707 09	Y	.44019642 08	Z	.54406465 07	DX	-.16416824 02	DY	-.21065388 02	DZ	.93131950 00
INC	.24577212 01	LAN	.10640553 03	APF	.28019896 03	MX	.66125173 00	MY	.69975308 00	MZ	-.35709443-01
WX	.41136484-01	WY	.12111449-01	WZ	.99908014 00	PX	.89325039 00	PY	.44757381 00	PZ	-.42204770-01
QX	-.44767326 00	QY	.89416488 00	QZ	.75930563-02	RX	-.37733052-01	RY	-.18906598-01	RZ	-.99910888 00
BX	.44767330 00	BY	-.89416496 00	BZ	-.75930571-02	TX	.44797301 00	TY	-.89404708 00	TZ	.00000000 00
DAP	-.24188722 01	RAP	.26613707 02								
B.T	.11755865 09	B.R	.89345134 06	B	.11756205 09	THA	.43544035 00				

SELENOCENTRIC EQUATORIAL COORDINATES

X	-.33163530 06	Y	.16002742 06	Z	.93843700 05	DX	.30774295 01	DY	-.96721085 01	DZ	-.57587111 01
R	.37999656 06	DEC	.14297654 02	RA	.15424081 03	V	.11669747 02	PTH	-.44511751 02	AZ	.11761824 03
R	.37999649 06	LAT	.43715054 01	LON	.35632507 03	VR	.10975066 02	PTR	-.48196021 02	AZR	.96182824 02
LTS	.60773144 00	LNS	.33899399 03	LTE	.43275429 01	LNE	.35555344 03				
ALT	.37825856 06	SHA	-.11563183 06	ALP	.10640702 02	DR	-.81811413 01	DP	.12547549-02	ASD	.26205643 00
HGE	.24788947 03	SVL	-.21581477 01	HNG	.19763212 03	SIA	.50029076 02				

SELENOCENTRIC CONIC

EPOCH OF PERICENTER PASSAGE JULIAN DATE 2438248.47598952 AUG. 6,1963 23 25 25.496

SMA	-.35993385 02	ECC	.75292653 04	B	.27100373 06	SLR	.20404590 10	APO	.00000000 00	RCA	.27096775 06
VH	.11668642 02	C3	.13615721 03	C1	.31622457 07	TFP	-.22829789 05	TF	.63416079 01	LTF	.63339593 01
TA	-.44517092 02	MTA	.90007609 02	EA	-.49811417 02	MA	-.42405498 06	C3J	-.19881849 01	TFI	.00000000 00
ZAE	.13527120 03	ZAP	.15105150 03	ZAC	.97103777 02	DEF	.22117329-01	IR	.17736282 04	GP	-.74864319 01
OP1	-.22110523 02	OY	-.28057831 01	OP2	.39708865 02						

CASE 1 SPACE TRAJECTORIES 3

EARTH-MOON,3X3 SEARCH CHECK 4

ALL VECTORS REFERENCED TO EARTH EQUATOR PLANE

X	-.33163530 06	Y	.16002742 06	Z	.93843700 05	DX	.30774295 01	DY	-.96721085 01	DZ	-.57587111 01
INC	.30839001 02	LAN	.35950921 03	APF	.19571718 03	MX	-.48817920 00	MY	-.74825335 00	MZ	-.44921930 00
WX	-.43909433-02	WY	-.51260864 00	WZ	.85861114 00	PX	-.96456745 00	PY	-.22433471 00	PZ	-.13886528 00
QX	.26379983 00	QY	-.82879810 00	QZ	-.49346056 00	RX	-.14960081 00	RY	.47025644 00	RZ	-.86975770 00
BX	-.96460249 00	BY	-.22422464 00	BZ	-.13879973 00	TX	-.95294115 00	TY	-.30315537 00	TZ	.00000000 00
SXI	.26367171 00	SYI	-.82882790 00	SZI	-.49347900 00	DAI	-.29569504 02	RAI	.28764722 03		
SXO	.26392794 00	SYO	-.82876830 00	SZO	-.49344211 00	DAO	-.29567075 02	RAO	.28766449 03		
ETE	.18934792 03	ETS	.19991166 03	ETC	.27721584 03						
B.T	.26753063 06	B.R	.43247959 05	B	.27100373 06	THA	.91827743 01				

ALL VECTORS REFERENCED TO ORBIT PLANE OF TARGET

X	.37996219 06	Y	.51083046 04	Z	-.16754101 03	DX	-.82910510 01	DY	.80703059 01	DZ	-.15204086 01
INC	.10552503 02	LAN	.18063463 03	APF	.22465501 03	MX	-.36878179 00	MY	-.85747132 00	MZ	.15896502 00
WX	-.20284960-02	WY	.18312519 00	WZ	.98308750 00	PX	.70365448 00	PY	.69878667 00	PZ	-.12871497 00
QX	-.71053939 00	QY	.69149282 00	QZ	-.13027435 00	RX	.93360857-01	RY	-.90882392-01	RZ	-.99147572 00
BX	.70374886 00	BY	.69869484 00	BZ	-.12869767 00	TX	.69753158 00	TY	.71655405 00	TZ	.00000000 00
SXI	-.71044593 00	SYI	.69158562 00	SZI	-.13029144 00	DAI	-.74864345 01	RAI	.13577070 03		
SXO	-.71063285 00	SYO	.69140001 00	SZO	-.13025725 00	DAO	-.74844597 01	RAO	.13578592 03		
ETE	.18762342 03	ETS	.19818716 03	ETC	.27549134 03						
B.T	.26871095 06	B.R	.35177411 05	B	.27100374 06	THA	.74582762 01				

2 DAYS 10 HRS. 27 MIN. 17.939 SEC. JULIAN DATE 2438250.64738017 AUG. 9,1963 03 32 13.646

GEOCENTRIC EQUATORIAL COORDINATES

X	.33729827 06	Y	.62050963 05	Z	-.75425285 04	DX	.83165929 00	DY	.28275540 00	DZ	.66910586-01
R	.34304130 06	DEC	-.12598762 01	RA	.10423851 02	V	.88095675 00	PTH	.79939495 02	AZ	.56023474 02
R	.34304130 06	LAT	-.12598762 01	LON	.45405774 00	VE	.24896564 02	PTE	.19966222 01	AZE	.27019804 03
XS	-.10882536 09	YS	.96928211 08	ZS	.42030929 08	DXS	-.20263083 02	DYS	-.19499816 02	DZS	-.84561414 01
XM	.36799083 06	YM	.38868066 05	ZM	-.18520706 05	DXM	-.97897743-01	DYM	.97845127 00	DZM	.39709707 00
XT	.36799083 06	YT	.38868066 05	ZT	-.18520706 05	DXT	-.97897743-01	DYT	.97845127 00	DZT	.39709707 00
RS	.15167279 09	VS	.29365654 02	RM	.37050100 06	VM	.10604890 01	RT	.37050100 06	VT	.10604890 01
GED	-.12684592 01	ALT	.33666310 06	LDS	.12833949 03	RAS	.13830928 03	RAM	.60293601 01	LDM	.35605957 03
DUT	.35000000 02	DT	.19200000 04	DR	.86741102 00	SHA	.27546056 06	DES	.16088141 02	DEM	-.28653104 01
DAC	.00000000 00										

GEOCENTRIC CONIC

EPOCH OF PERICENTER PASSAGE JULIAN DATE 2438248.28651002 AUG. 6,1963 18 52 34.467

SMA	.25752018 06	ECC	.98633138 00	B	.42432569 05	SLR	.69917753 04	APO	.51152042 06	RCA	.35199440 04
VH	.10320509 00	C3	-.15478523 01	C1	.52791514 05	TFP	.20397918 06	TF	.17940998 01	PER	.21675799 05
TA	.17331140 03	MTA	.00000000 00	EA	.10967577 03	MA	.56462740 02	C3J	-.20632708 01	TFI	.58454982 02

ALL VECTORS REFERENCED TO EARTH EQUATOR PLANE

X	.33729827 06	Y	.62050963 05	Z	-.75425285 04	DX	.83165929 00	DY	.28275540 00	DZ	.66910586-01
INC	.33997090 02	LAN	.12292532 02	APF	.18443499 03	MX	-.13795314 00	MY	.81780360 00	MZ	.55871795 00
WX	.11904483 00	WY	-.54633096 00	WZ	.82906596 00	PX	-.96049847 00	PY	-.27490576 00	PZ	-.43237995-01
QX	.25153728 00	QY	-.79116930 00	QZ	-.55747614 00	RX	.41568903-01	RY	.11897500-01	RZ	-.99906480 00
BX	-.25153734 00	BY	.79116950 00	BZ	.55747628 00	TX	-.27516309 00	TY	.96139757 00	TZ	.00000000 00
DAP	-.24781258 01	RAP	.19597173 03								
B.T	.35212338 05	B.R	-.23677294 05	B	.42432569 05	THA	.32608253 03				

CASE 1 SPACE TRAJECTORIES 4

EARTH-MOON,3X3 SEARCH CHECK 4

ALL VECTORS REFERENCED TO ORBIT PLANE OF TARGET

X	-.34189965 06	Y	-.27946825 05	Z	-.96970202 03	DX	-.85234290 00	DY	-.22078793 00	DZ	.29138548-01
INC	.11846796 02	LAN	.18544509 03	APF	.18589963 03	MX	-.18152550 00	MY	.96188679 00	MZ	-.20447197 00
WX	-.19480948-01	WY	.20436962 00	WZ	.97870004 00	PX	.98066904 00	PY	.19453250 00	PZ	-.21101633-01
QX	-.19470160 00	QY	.95936976 00	QZ	-.20420864 00	RX	-.20698328-01	RY	-.41058678-02	RZ	-.99977730 00
BX	.19470157 00	BY	-.95936966 00	BZ	.20420862 00	TX	.19457583 00	TY	-.98088748 00	TZ	.00000000 00
DAP	-.12091236 01	RAP	.11219946 02								
B.T	.41537999 05	B.R	-.86670251 04	B	.42432566 05	THA	.34821416 03				

HELIOCENTRIC ECLIPTIC COORDINATES

X	.10916266 09	Y	-.10559491 09	Z	-.31207500 05	DX	.21094742 02	DY	.21540426 02	DZ	-.50774395-01
R	.15187749 09	LAT	-.11773028-01	LON	.31595176 03	V	.30149306 02	PTH	.35286550 00	AZ	.90096421 02
XE	.10882536 09	YE	-.10564884 09	ZE	.39900000 03	DXE	.20263083 02	DYE	.21254391 02	DZE	.32949447-03
XT	.10919335 09	YT	-.10562055 09	ZT	-.32056500 05	DXT	.20165185 02	DYT	.22310057 02	DZT	-.24618506-01
LTE	.15072588-03	LOE	.31584853 03	LTT	-.12090139-01	LOT	.31595286 03	RST	.15191737 09	VST	.30072810 02
EPS	.53313176 02	ESP	.10397499 00	SEP	.12658291 03	EPM	.13097020 03	EMP	.44354040 02	MEP	.46757413 01
MPS	.17565319 03	MSP	.27453512-18	SMP	.43456642 01	SEM	.13125797 03	EMS	.48636982 02	ESM	.10467832 00
EPT	.13097020 03	ETP	.44354040 02	TEP	.46757413 01	TPS	.17565319 03	TSP	.27453512-18	STP	.43456642 01
SET	.13125797 03	STE	.48636982 02	EST	.10467832 00	RPM	.40000000 05	RPT	.40000000 05	SPN	.52247843 02
GCE	.10410382 03	GCT	.29361449 03	SIP	.17316290 03	CPT	.10026818 03	SIN	.97777896 02	D1	.13047322 01
REP	.34304130 06	VEP	.88095675 00	CPE	.93813975 02	CPS	.77962638 02	D2	.13040459 01	D3	.74671362 00

HELIOCENTRIC CONIC

EPOCH OF PERICENTER PASSAGE JULIAN DATE 2438241.43571602 JULY 30,1963 22 27 25.865

SMA	.15824253 09	ECC	.40691731-01	B	.15810975 09	SLR	.15798051 09	APO	.16468169 09	RCA	.15180337 09
VH	.27804632 02	C3	-.83868378 03	C1	.45789140 10	TFP	.79588778 06	TF	-.16262496 03	PER	.39736555 03
TA	.90580100 01	MTA	.00000000 00	EA	.86980385 01	MA	.83454617 01			TFI	.58454982 02

ALL VECTORS REFERENCED TO ECLIPTIC PLANE

X	.10916266 09	Y	-.10559491 09	Z	-.31207500 05	DX	.21094742 02	DY	.21540426 02	DZ	-.50774395-01
INC	.96913289-01	LAN	.12899039 03	APF	.17790332 03	MX	.63749525 00	MY	.71911838 00	MZ	-.16071322-02
WX	.13177230-02	WY	.10667057-02	WZ	.99999857 00	PX	.60033032 00	PY	-.79974673 00	PZ	.62025411-04
QX	.79974563 00	QY	.60032937 00	QZ	-.16942204-02	RX	.37235896-04	RY	-.49604835-04	RZ	-.99999565 00
BX	-.79974911 00	BY	-.60033198 00	BZ	.16942278-02	TX	-.79975020 00	TY	-.60033292 00	TZ	.00000000 00
DAP	.35537943-02	RAP	.30689374 03								
B.T	.15811054 09	B.R	-.26787450 06	B	.15811077 09	THA	.35990293 03				

ALL VECTORS REFERENCED TO ORBIT PLANE OF TARGET

X	-.10036260 09	Y	.11383526 09	Z	.59711355 07	DX	-.22601094 02	DY	-.19805871 02	DZ	.24287198 01
INC	.51303640 01	LAN	.10540939 03	APF	.17024238 02	MX	.62865952 00	MY	.73973680 00	MZ	-.72060661-01
WX	.86207665-01	WY	.23760752-01	WZ	.99599382 00	PX	-.53518905 00	PY	.84432094 00	PZ	.26180582-01
QX	-.84031636 00	QY	-.53530195 00	QZ	.85503430-01	RX	-.14016431-01	RY	.22112497-01	RZ	-.99965252 00
BX	.84032031 00	BY	.53530446 00	BZ	-.85503831-01	TX	.84461442 00	TY	.53537508 00	TZ	.00000000 00
DAP	.15002075 01	RAP	.12236935 03								
B.T	.15753129 09	B.R	.13523644 08	B	.15811071 09	THA	.49066589 01				

CASE 1 SPACE TRAJECTORIES 5

EARTH-MOON,3X3 SEARCH CHECK 4

SELENOCENTRIC EQUATORIAL COORDINATES

X	-.30692555 05	Y	.23182897 05	Z	.10978177 05	DX	.92955703 00	DY	-.69569588 00	DZ	-.33018648 00
R	.40000000 05	DEC	.15929504 02	RA	.14293528 03	V	.12071007 01	PTH	-.89750455 02	AZ	.28263180 03
R	.39999996 05	LAT	.19802477 01	LON	.31344736 03	VR	.12122726 01	PTR	-.84699704 02	AZR	.26966423 03
LTS	.68028428 00	LNS	.30929948 03	LTE	.64764673 01	LNE	.35771137 03				
ALT	.38262000 05	SHA	-.30309379 04	ALP	.16054602 02	DR	-.12070893 01	DP	.75236141-05	ASD	.24902844 01
HGE	.30668682 03	SVL	.71755832 00	HNG	.17571271 03	SIA	.12847992 03				

SELENOCENTRIC CONIC

EPOCH OF PERICENTER PASSAGE JULIAN DATE 2438250.97760757 AUG. 9,1963 11 27 45.295

SMA	-.40433498 04	ECC	.10011128 01	B	.19083665 03	SLR	.90043195 01	APO	.00000000 00	RCA	.44996560 01
VH	.11009333 01	C3	.12120541 01	C1	.21006666 03	TFP	-.28531648 05	TF	.66380440 02	LTF	.66379306 02
TA	-.17703745 03	MTA	.17729819 03	EA	-.17635740 03	MA	-.44511188 03	C3J	-.20632708 01	TFI	.58454982 02
ZAE	.13590674 03	ZAP	.17539740 03	ZAC	.10020400 03	DEF	.17459669 03	IR	.41322303 04	GP	.13829400 01
OP1	.36686824 02	OY	.95033567 00	OP2	-.40970206 02						

ALL VECTORS REFERENCED TO EARTH EQUATOR PLANE

X	-.30692555 05	Y	.23182897 05	Z	.10978177 05	DX	.92955703 00	DY	-.69569588 00	DZ	-.33018648 00
INC	.15979606 03	LAN	.19370141 03	APF	.22957388 03	MX	.63611853 00	MY	.74258073 00	MZ	.21031998 00
WX	-.81908756-01	WY	.33596688 00	WZ	-.93846932 00	PX	.79916522 00	PY	-.54041894 00	PZ	-.26321765 00
QX	-.59561428 00	QY	-.77154027 00	QZ	-.22422266 00	RX	-.21899515 00	RY	.16383021 00	RZ	-.96187358 00
BX	.63252587 00	BY	.74509373 00	BZ	.21153333 00	TX	-.59902573 00	TY	-.80072978 00	TZ	.00000000 00
SXI	.77020082 00	SYI	-.57618702 00	SZI	-.27349445 00	DAI	-.15872312 02	RAI	.32319984 03		
SXO	-.82635289 00	SYO	.50344938 00	SZO	.25235566 00	DAO	.14616951 02	RAO	.14864845 03		
ETE	.19263813 03	ETS	.31037395 01	ETC	.29697483 03						
B.T	-.18616459 03	B.R	-.41968711 02	B	.19083665 03	THA	.19270430 03				

ALL VECTORS REFERENCED TO ORBIT PLANE OF TARGET

X	.28601350 05	Y	-.27946778 05	Z	-.96969409 03	DX	-.86678154 00	DY	.83960277 00	DZ	.29138486-01
INC	.17937606 03	LAN	.18136087 03	APF	.42737841 02	MX	.58883446 00	MY	.76748920 00	MZ	.25524317-01
WX	-.80468329-03	WY	.33872305-01	WZ	-.99994071 00	PX	-.75021560 00	PY	.66079559 00	PZ	.22987712-01
QX	.66157349 00	QY	.75015315 00	QZ	.24878555-01	RX	-.17338632-01	RY	.16788230-01	RZ	-.99970870 00
BX	-.69583080 00	BY	-.71781278 00	BZ	-.23755480-01	TX	.69561201 00	TY	.71841766 00	TZ	.00000000 00
SXI	-.71820839 00	SYI	.69540938 00	SZI	.24134474-01	DAI	.13829366 01	RAI	.13592399 03		
SXO	.78055613 00	SYO	-.62471376 00	SZO	-.21789880-01	DAO	-.12485662 01	RAO	.32132815 03		
ETE	.17857215 03	ETS	.34903777 03	ETC	.28290886 03						
B.T	-.19078210 03	B.R	.45347418 01	B	.19083599 03	THA	.17863838 03				

2 DAYS 17 HRS. 49 MIN. 17.939 SEC. JULIAN DATE 2438250.95432460 AUG. 9,1963 10 54 13.646

RECTIFICATION .79894897-02 -.10656990 03 -.63633577 02 -.13469078 02

2 DAYS 18 HRS. 15 MIN. 30.338 SEC. JULIAN DATE 2438250.97252367 AUG. 9,1963 11 20 26.045

GEOCENTRIC EQUATORIAL COORDINATES

X	.36275905 06	Y	.67204086 05	Z	-.68447539 04	DX	.18259280 01	DY	-.55308816 00	DZ	-.31915273 00
R	.36899508 06	DEC	-.10628799 01	RA	.10495522 02	V	.19343676 01	PTH	.61518758 02	AZ	.25182931 03
R	.36899507 06	LAT	-.10628799 01	LON	.24315361 03	VE	.27832828 02	PTE	.35022759 01	AZE	.26940670 03
XS	-.10939298 09	YS	.96378954 08	ZS	.41792747 08	DXS	-.20147480 02	DYS	-.19603245 02	DZS	-.85008956 01
XM	.36409308 06	YM	.66197158 05	ZM	-.73216552 04	DXM	-.17949960 00	DYM	.96618515 00	DZM	.39978952 00
XT	.36409308 06	YT	.66197158 05	ZT	-.73216552 04	DXT	-.17949960 00	DYT	.96618515 00	DZT	.39978952 00
RS	.15166529 09	VS	.29367897 02	RM	.37013435 06	VM	.10609267 01	RT	.37013435 06	VT	.10609267 01
GED	-.10701215 01	ALT	.36261688 06	LOS	.11276935 02	RAS	.13861884 03	RAM	.10304606 02	LOM	.24296270 03
DUT	.35000000 02	DT	.59999999 02	DR	.17002575 01	SHA	.29562027 06	DES	.15995333 02	DEM	-.11334460 01
DAC	.00000000 00										

CASE 1 SPACE TRAJECTORIES 6

EARTH-MOON,3X3 SEARCH CHECK 4

GEOCENTRIC CONIC

EPOCH OF PERICENTER PASSAGE JULIAN DATE 2438248.95090996 AUG. 7,1963 10 49 18.621

SMA	-.25207338 06	ECC	.14673321 01	B	.27067837 06	SLR	.29065660 06	APO	.00000000 00	RCA	.11780198 06
VH	.12574968 01	C3	.15812982 01	C1	.34037722 06	TFP	.17466742 06	TF	.17739698 02	LTF	-.36114688 01
TA	.98319088 02	MTA	.13296167 03	EA	.63478276 02	MA	.49924583 02	C3J	-.20838940 01	TFI	.66258426 02
ZAE	.12851586 03	ZAP	.75597674 02	ZAC	.72836411 02	DEF	.85923347 02	IR	.29651774 05	GP	-.30951181 01

ALL VECTORS REFERENCED TO EARTH EQUATOR PLANE

X	.36275905 06	Y	.67204086 05	Z	-.68447539 04	DX	.18259280 01	DY	-.55308816 00	DZ	-.31915273 00
INC	.16179929 03	LAN	.19373024 03	APF	.85085609 02	MX	.16738680 00	MY	-.93528894 00	MZ	-.31179507 00
WX	-.74135746-01	WY	.30342075 00	WZ	-.94996825 00	PX	-.30786620 00	PY	.89909624 00	PZ	.31119813 00
QX	.94853690 00	QY	.31553401 00	QZ	.26757814-01	RX	-.17733189 00	RY	.74904539-01	RZ	-.98129641 00
BX	.42113698 00	BY	.87300671 00	BZ	.24597353 00	TX	-.38910905 00	TY	-.92119170 00	TZ	.00000000 00
SXI	.48433495 00	SYI	.84365302 00	SZI	.23166595 00	DAI	.13395173 02	RAI	.60140186 02		
SXO	.90396211 00	SYO	-.38183131 00	SZO	-.19250270 00	DAO	-.11098875 02	RAO	.33710092 03		
ETE	.12446322 02	ETS	.13351406 02	ETC	.29170342 03						
B.T	-.26432677 06	B.R	-.58293547 05	B	.27067837 06	THA	.19243670 03				

ALL VECTORS REFERENCED TO ORBIT PLANE OF TARGET

X	-.36899275 06	Y	-.13099753 04	Z	-.42169861 02	DX	-.17035210 01	DY	.91419619 00	DZ	.63557222-01
INC	.17603700 03	LAN	.18010888 03	APF	.26158614 03	MX	.18040984 00	MY	-.98075171 00	MZ	-.67967469-01
WX	-.13134507-03	WY	.69111535-01	WZ	-.99760890 00	PX	.14819721 00	PY	-.98659178 00	PZ	-.68367811-01
QX	-.98895780 00	QY	-.14785181 00	QZ	-.10112551-01	RX	-.32348215-01	RY	.22128486-01	RZ	-.99923162 00
BX	-.56553156 00	BY	-.82275982 00	BZ	-.56924025-01	TX	.56460565 00	TY	.82536080 00	TZ	.00000000 00
SXI	-.62273116 00	SYI	-.78057059 00	SZI	-.53993742-01	DAI	-.30951172 01	RAI	.23141749 03		
SXO	-.82472663 00	SYO	.56417182 00	SZO	.39192817-01	DAO	.22461572 01	RAO	.14562509 03		
ETE	.35753347 03	ETS	.35843855 03	ETC	.27679057 03						
B.T	-.27042564 06	B.R	.11694241 05	B	.27067838 06	THA	.17752385 03				

HELIOCENTRIC ECLIPTIC COORDINATES

X	.10975574 09	Y	-.10499123 09	Z	-.32608000 05	DX	.21973408 02	DY	.20732683 02	DZ	-.72527765-01
R	.15188640 09	LAT	-.12300645-01	LON	.31627099 03	V	.30210595 02	PTH	.29351380 01	AZ	.90137101 02
XE	.10939298 09	YE	-.10505016 09	ZE	.40850000 03	DXE	.20147480 02	DYE	.21367088 02	DZE	.24008751-03
XT	.10975707 09	YT	-.10499234 09	ZT	-.32645000 05	DXT	.19967981 02	DYT	.22412571 02	DZT	-.17357945-01
LTE	.15432223-03	LOE	.31616017 03	LTT	-.12314461-01	LOT	.31627103 03	RST	.15188814 09	VST	.30017393 02
EPS	.53128505 02	ESP	.11146784 00	SEP	.12675997 03	EPM	.13085359 03	EMP	.48942901 02	MEP	.20355164 00
MPS	.17594079 03	MSP	.18000000 03	SMP	.40591647 01	SEM	.12696345 03	EMS	.52924985 02	ESM	.11146784 00
EPT	.13085359 03	ETP	.48942901 02	TEP	.20355164 00	TPS	.17594079 03	TSP	.18000000 03	STP	.40591647 01
SET	.12696345 03	STE	.52924985 02	EST	.11146784 00	RPM	.17380900 04	RPT	.17380900 04	SPM	.52138111 02
GCE	.10399505 03	GCT	.29487239 03	SIP	.86523855 02	CPT	.10026378 03	SIN	.10846863 02	D1	.29479410 04
REP	.36899508 06	VEP	.19343676 01	CPE	.93700608 02	CPS	.78005100 02	D2	.32202587 02	D3	.40820174 07

HELIOCENTRIC CONIC

EPOCH OF PERICENTER PASSAGE JULIAN DATE 2438199.80958457 JUNE 19,1963 07 25 48.108

SMA	.15896316 09	ECC	.67813381-01	B	.15859750 09	SLR	.15823214 09	APO	.16974298 09	RCA	.14818333 09
VH	.26997045 02	C3	-.83488177 03	C1	.45825592 10	TFP	.44204779 07	TF	-.11616521 04	PER	.40008301 03
TA	.51968545 02	MTA	.00000000 00	EA	.48968036 02	MA	.46037090 02			TFI	.66258426 02

ALL VECTORS REFERENCED TO ECLIPTIC PLANE

X	.10975574 09	Y	-.10499123 09	Z	-.32608000 05	DX	.21973408 02	DY	.20732683 02	DZ	-.72527765-01
INC	.13794551 00	LAN	.13114422 03	APF	.13315819 03	MX	.63366695 00	MY	.72311305 00	MZ	-.22894987-02
WX	.18092140-02	WY	.15807389-02	WZ	.99999710 00	PX	-.99276184-01	PY	-.99506091 00	PZ	.17525484-02
QX	.99506080 00	QY	-.99279120-01	QZ	-.16433483-02	RX	-.17398615-03	RY	-.17438907-02	RZ	-.10000010 01
BX	-.99505830 00	BY	.99278869-01	BZ	.16433442-02	TX	-.99505992 00	TY	.99276086-01	TZ	.00000000 00

CASE 1 SPACE TRAJECTORIES

EARTH-MOON,3X3 SEARCH CHECK 4

DAP	.10041402 00	RAP	.26430251 03				
B.T	.15859740 09	B.R	-.26063155 06	B	.15859762 09	THA	.35990584 03

ALL VECTORS REFERENCED TO ORBIT PLANE OF TARGET

X	-.91566172 08	Y	.12103141 09	Z	.60426635 07	DX	-.24859966 02	DY	-.16989092 02	DZ	.24561940 01
INC	.50935501 01	LAN	.10057756 03	APF	.33465381 03	MX	.62711468 00	MY	.74378160 00	MZ	-.67117254-01
WX	.87273502-01	WY	.16297416-01	WZ	.99605107 00	PX	.25325388 00	PY	.96665132 00	PZ	-.38006357-01
QX	-.96345349 00	QY	.25557076 00	QZ	.80235662-01	RX	-.96322320-02	RY	-.36765517-01	RZ	-.99927588 00
BX	.96345504 00	BY	-.25557117 00	BZ	-.80235791-01	TX	.96735179 00	TY	-.25343740 00	TZ	.00000000 00
DAP	-.21781277 01	RAP	.75318986 02								
B.T	.15808488 09	B.R	.12734332 08	B	.15859695 09	THA	.46054441 01				

SELENOCENTRIC EQUATORIAL COORDINATES

X	-.13340220 04	Y	.10069296 04	Z	.47690128 03	DX	.20054276 01	DY	-.15192733 01	DZ	-.71894225 00
R	.17380900 04	DEC	.15925211 02	RA	.14295422 03	V	.26166408 01	PTH	-.89899858 02	AZ	.10297006 03
R	.17380898 04	LAT	.19841768 01	LON	.30918209 03	VR	.26166366 01	PTR	-.89984360 02	AZR	.34784597 03
LTS	.68991057 00	LNS	.30533366 03	LTE	.66010712 01	LNE	.35806638 03				
ALT	.89996337-01	SHA	-.12303337 03	ALP	.17248245 02	DR	-.26166368 01	DP	.15016810-03	ASD	.89416920 02
HGE	.30687149 03	SVL	.76538331 00	HNG	.17601348 03	SIA	.41436667 02				

SELENOCENTRIC CONIC

EPOCH OF PERICENTER PASSAGE JULIAN DATE 2438250.97784501 AUG. 9,1963 11 28 05.809

SMA	-.40583892 04	ECC	.10000016 01	B	.71955180 01	SLR	.12855151-01	APO	.00000000 00	RCA	.64275707-02
VH	.10988915 01	C3	.12075626 01	C1	.79372539 01	TFP	-.45976379 03	TF	.66386138 02	LTF	.66386136 02
TA	-.17975719 03	MTA	.17989816 03	EA	-.51296407 02	MA	-.71327750 01	C3J	-.20838940 01	TFI	.66258426 02
ZAE	.13091646 03	ZAP	.17607843 03	ZAC	.10029752 03	DEF	.17979513 03	IR	.41385510 04	GP	.13925586 01
OP1	.36871495 02	OY	.10123250 01	OP2	-.40753842 02						

ALL VECTORS REFERENCED TO EARTH EQUATOR PLANE

X	-.13340220 04	Y	.10069296 04	Z	.47690128 03	DX	.20054276 01	DY	-.15192733 01	DZ	-.71894225 00
INC	.20807370 02	LAN	.12944189 02	APF	.30787688 03	MX	-.63466871 00	MY	-.73886733 00	MZ	-.21529537 00
WX	.78005347-01	WY	-.33938617 00	WZ	.93477999 00	PX	.76482528 00	PY	-.58245716 00	PZ	-.27529232 00
QX	.63791341 00	QY	.73641074 00	QZ	.21413106 00	RX	-.21900898 00	RY	.16616644 00	RZ	-.96146956 00
BX	-.63812271 00	BY	-.73926330 00	BZ	-.21514925 00	TX	-.60443657 00	TY	-.79665327 00	TZ	.00000000 00
SXI	.76595788 00	SYI	-.58114737 00	SZI	-.27491129 00	DAI	-.15956726 02	RAI	.32281169 03		
SXO	-.76369027 00	SYO	.58376511 00	SZO	.27567247 00	DAO	.16002092 02	RAO	.14260569 03		
ETE	.19274407 03	ETS	.81503408 00	ETC	.29680129 03						
B.T	.70130484 01	B.R	.16101648 01	B	.71955180 01	THA	.12930753 02				

ALL VECTORS REFERENCED TO ORBIT PLANE OF TARGET

X	.11415964 04	Y	-.13099376 04	Z	-.42163540 02	DX	-.17152005 01	DY	.19750586 01	DZ	.63557192-01
INC	.43781061 01	LAN	.46901903 01	APF	.12605896 03	MX	-.58585893 00	MY	-.76595644 00	MZ	-.21565206-01
WX	.24573419-02	WY	-.29952009-01	WZ	.99708200 00	PX	-.65361729 00	PY	.75643390 00	PZ	.24333853-01
QX	-.75496637 00	QY	-.65176079 00	QZ	-.17717870-01	RX	-.15921707-01	RY	.18360343-01	RZ	-.99970464 00
BX	.75566459 00	BY	.65471674 00	BZ	.17804944-01	TX	.75549743 00	TY	.65515161 00	TZ	.00000000 00
SXI	-.65495811 00	SYI	.75527429 00	SZI	.24302324-01	DAI	.13925569 01	RAI	.13093115 03		
SXO	.65227440 00	SYO	-.75759113 00	SZO	-.24365306-01	DAO	-.13961666 01	RAO	.31072795 03		
ETE	.17879270 03	ETS	.34686365 03	ETC	.28284991 03						
B.T	.71943576 01	B.R	-.12815422 00	B	.71954989 01	THA	.35897949 03				

B.T /X	.65892752 03	B.T /Y	.22452754 03	B.T /Z	.41034870 02
B.R /X	-.91296562 02	B.R /Y	-.74265168 02	B.R /Z	.33932626 02
T(F) /X	.25153160 00	T(F) /Y	.10591507 00	T(F) /Z	.31499862-01
DELTA X	-.23608053 00	DELTA Y	.48783591 00	DELTA Z	.33832934 01
B.TB.R/X	.66522218 03	B.TB.R/Y	.23649086 03	B.TB.R/Z	.53247381 02

CASE 5 SPACE TRAJECTORIES 1

EARTH-MOON,3X3 SEARCH CHECK 4
EPHEMERIS TAPE III WITH SATURN. B-8 IS T-1456

GME	.39860320 06	J	.16234500-02	H	-.57499999-05	D	.78749999-05	RE	.63781650 04	REM	.63783149 04
G	.66709998-19	A	.88745998 29	B	.88763998 29	C	.88800998 29	OME	.41780741-02	AU	.14959900 09
GMM	.49007589 04	GMS	.13271544 12	GMV	.32476950 06	GMA	.42977799 05	GMC	.37918700 08	GMJ	.12671060 09

INJECTION CONDITIONS MOON JULIAN DATE 2438248.21175586 AUG. 6,1963 17 04 55.707

GEOCENTRIC XO-.61069120 04 YO-.23615418 04 ZO-.55013851 03 DXO .35627328 01 DYO-.87922522 01 DZO-.54547869 01
CARTESIAN GMC .00000000 00 SGC .00000000 00 TO .61495706 05 GHA .21074440 03 GHO .31381078 03

0 DAYS 0 HRS. 0 MIN. 0.000 SEC. JULIAN DATE 2438248.21175586 AUG. 6,1963 17 04 55.707

GEOCENTRIC EQUATORIAL COORDINATES

X	-.61069117 04	Y	-.23615417 04	Z	-.55013849 03	DX	.35627326 01	DY	-.87922516 01	DZ	-.54547867 01
R	.65706850 04	DEC	-.48027815 01	RA	.20114148 03	V	.10943100 02	PTH	.15993579 01	AZ	.11987262 03
R	.65706849 04	LAT	-.48027815 01	LON	.35039708 03	VE	.10531932 02	PTE	.16618132 01	AZE	.12116701 03
XS	-.10447151 09	YS	.10094913 09	ZS	.43774604 08	DXS	-.21109277 02	DYS	-.18709437 02	DZS	-.81140054 01
XM	.32552863 06	YM	-.16238945 06	ZM	-.94397222 05	DXM	.48530311 00	DYM	.87985689 00	DZM	.30392435 00
XT	.32552863 06	YT	-.16238945 06	ZT	-.94397222 05	DXT	.48530311 00	DYT	.87985689 00	DZT	.30392435 00
RS	.15172752 09	VS	.29351008 02	RM	.37583248 06	VM	.10497796 01	RT	.37583248 06	VT	.10497796 01
GED	-.48353568 01	ALT	.19263007 03	LOS	.28523796 03	RAS	.13598236 03	RAM	.33348775 03	LOM	.12274336 03
DUT	.35000000 02	DT	.15000000 02	DR	.30542676 00	SHA	-.60867428 04	DES	.16768653 02	DEM	-.14546658 02
DAC	.00000000 00										

GEOCENTRIC CONIC

EPOCH OF PERICENTER PASSAGE JULIAN DATE 2438248.21136297 AUG. 6,1963 17 04 21.761

SMA	.25287391 06	ECC	.97403647 00	B	.57248417 05	SLR	.12960533 05	APO	.49918231 06	RCA	.65654983 04
VH	.14398678 00	C3	-.15762923 01	C1	.71875657 05	TFP	.33945864 02	TF	-.94294067-02	PER	.21091829 05
TA	.32413605 01	MTA	.00000000 00	EA	.37182994 00	MA	.96565913-02	C3J	-.19926119 01	TFI	.00000000 00

ALL VECTORS REFERENCED TO EARTH EQUATOR PLANE

X	-.61069117 04	Y	-.23615417 04	Z	-.55013849 03	DX	.35627326 01	DY	-.87922516 01	DZ	-.54547867 01
INC	.30221026 02	LAN	.12848139 02	APF	.18633384 03	MX	.35164629 00	MY	-.79372961 00	MZ	-.49632462 00
WX	.11192594 00	WY	-.49073495 00	WZ	.86409013 00	PX	-.94781379 00	PY	-.31395148 00	PZ	-.55528951-01
QX	.29853237 00	QY	-.81278142 00	QZ	-.50026467 00	RX	.52712438-01	RY	.17460337-01	RZ	-.99845707 00
BX	-.29853238 00	BY	.81278145 00	BZ	.50026468 00	TX	-.31443664 00	TY	.94927847 00	TZ	.00000000 00
DAP	-.31832113 01	RAP	.19832680 03								
B.T	.49544236 05	B.R	-.28683617 05	B	.57248417 05	THA	.32993132 03				

ALL VECTORS REFERENCED TO ORBIT PLANE OF TARGET

X	.41309720 04	Y	.51070414 04	Z	-.16462576 03	DX	-.82548937 01	DY	.70211491 01	DZ	-.15204086 01
INC	.80793018 01	LAN	.22086219 03	APF	.18702759 03	MX	.34693908 00	MY	-.92789144 00	MZ	.13183588 00
WX	-.91949455-01	WY	.10629097 00	WZ	.99007449 00	PX	.67135312 00	PY	.74093813 00	PZ	-.17195150-01
QX	-.73541162 00	QY	.66310851 00	QZ	-.13948763 00	RX	-.11545724-01	RY	-.12742426-01	RZ	-.99985214 00
BX	.73541164 00	BY	-.66310853 00	BZ	.13948763 00	TX	.74104770 00	TY	-.67145239 00	TZ	.00000000 00
DAP	-.98525734 00	RAP	.47820736 02								
B.T	.56688495 05	B.R	-.79866150 04	B	.57248332 05	THA	.35198060 03				

CASE 5 SPACE TRAJECTORIES 2

EARTH-MOON,3X3 SEARCH CHECK 4

HELIOCENTRIC ECLIPTIC COORDINATES

X	.10446541 09	Y	-.11003394 09	Z	.70350000 03	DX	.24672009 02	DY	.10156514 02	DZ	-.15057296 01
R	.15172504 09	LAT	.26566200-03	LON	.31351290 03	V	.26723211 02	PTH	.21102622 02	AZ	.93462628 02
XE	.10447151 09	YE	-.11003155 09	ZE	.26900000 03	DXE	.21109277 02	DYE	.20393138 02	DZE	.89174508-03
XT	.10479704 09	YT	-.11021809 09	ZT	-.21731000 05	DXT	.21594580 02	DYT	.21321280 02	DZT	-.70312797-01
LTE	.10158055-03	LOE	.31351519 03	LTT	-.81867271-02	LOT	.31355574 03	RST	.15208697 09	VST	.30346793 02
EPS	.11212515 03	ESP	.27453512-18	SEP	.67872553 02	EPM	.50275461 02	EMP	.77043845 00	MEP	.12895408 03
MPS	.16224059 03	MSP	.43114612-01	SMP	.17715742 02	SEM	.16300445 03	EMS	.16954157 02	ESM	.41377734-01
EPT	.50275461 02	ETP	.77043845 00	TEP	.12895408 03	TPS	.16224059 03	TSP	.43114612-01	STP	.17715742 02
SET	.16300445 03	STE	.16954157 02	EST	.41377734-01	RPM	.37999781 06	RPT	.37999781 06	SPN	.36035029 02
GCE	.28108842 03	GCT	.28815369 03	SIP	.16197853 03	CPT	.96371584 02	SIN	.96109528 02	D1	.13721275 00
REP	.65706850 04	VEP	.10943100 02	CPE	.84638904 02	CPS	.77642719 02	D2	.13088663 00	D3	.19645979-02

HELIOCENTRIC CONIC

EPOCH OF PERICENTER PASSAGE JULIAN DATE 2438170.03445913 MAY 20,1963 12 49 37.269

SMA	.12819152 09	ECC	.39870002 00	B	.11756205 09	SLR	.10781398 09	APO	.17930147 09	RCA	.77081557 08
VH	.21096693 02	C3	-.10352903 04	C1	.37826683 10	TFP	.67545184 07	TF	-.18762551 04	PER	.28973057 03
TA	.13654288 03	MTA	.00000000 00	EA	.11741607 03	MA	.97137924 02			TFI	.00000000 00

ALL VECTORS REFERENCED TO ECLIPTIC PLANE

X	.10446541 09	Y	-.11003394 09	Z	.70350000 03	DX	.24672009 02	DY	.10156514 02	DZ	-.15057296 01
INC	.34626484 01	LAN	.13351728 03	APF	.43452708 02	MX	.65214458 00	MY	.69989742 00	MZ	-.57775667-01
WX	.43798238-01	WY	.41588105-01	WZ	.99817438 00	PX	-.99769142 00	PY	.53723335-01	PZ	.41538708-01
QX	-.51897760-01	QY	-.99768935 00	QZ	.43845084-01	RX	-.41478616-01	RY	.22335259-02	RZ	-.99913681 00
BX	.51897765-01	BY	.99768946 00	BZ	-.43845088-01	TX	.53769748-01	TY	.99855337 00	TZ	.00000000 00
DAP	.23806769 01	RAP	.17691773 03								
B.T	.11744879 09	B.R	.51589702 07	B	.11756204 09	THA	.25151181 01				

ALL VECTORS REFERENCED TO ORBIT PLANE OF TARGET

X	-.14509707 09	Y	.44019641 08	Z	.54406495 07	DX	-.16416824 02	DY	-.21065388 02	DZ	.93131950 00
INC	.24577411 01	LAN	.10640551 03	APF	.28019898 03	MX	.66125172 00	MY	.69975308 00	MZ	-.35709444-01
WX	.41136501-01	WY	.12111435-01	WZ	.99908012 00	PX	.89325041 00	PY	.44757384 00	PZ	-.42204782-01
QX	-.44767328 00	QY	.89416490 00	QZ	.75930766-02	RX	-.37733061-01	RY	-.18906603-01	RZ	-.99910892 00
BX	.44767331 00	BY	-.89416495 00	BZ	-.75930770-02	TX	.44797302 00	TY	-.89404708 00	TZ	.00000000 00
DAP	-.24188730 01	RAP	.26613708 02								
B.T	.11755865 09	B.R	.89345376 06	B	.11756205 09	THA	.43544120 00				

SELENOCENTRIC EQUATORIAL COORDINATES

X	-.33163554 06	Y	.16002791 06	Z	.93847083 05	DX	.30774295 01	DY	-.96721085 01	DZ	-.57587111 01
R	.37999781 06	DEC	.14298132 02	RA	.15424076 03	V	.11669747 02	PTH	-.44512019 02	AZ	.11761784 03
R	.37999775 06	LAT	.43719298 01	LON	.35632484 03	VR	.10975067 02	PTR	-.48196318 02	AZR	.96182362 02
LTS	.60773144 00	LNS	.33899399 03	LTE	.43275429 01	LNE	.35555344 03				
ALT	.37825981 06	SHA	-.11563135 06	ALP	.10642158 02	DR	-.81811802 01	DP	.12547450-02	ASD	.26205557 00
HGE	.24787484 03	SVL	-.21500991 01	HNG	.19763293 03	SIA	.50013405 02				

SELENOCENTRIC CONIC

EPOCH OF PERICENTER PASSAGE JULIAN DATE 2438248.47599165 AUG. 6,1963 23 25 25.679

SMA	-.35993385 02	ECC	.75292556 04	B	.27100338 06	SLR	.20404538 10	APO	.00000000 00	RCA	.27096740 06
VH	.11668642 02	C3	.13615721 03	C1	.31622417 07	TFP	-.22829972 05	TF	.63416588 01	LTF	.63340101 01
TA	-.44517359 02	MTA	.90007609 02	EA	-.49811790 02	MA	-.42405837 06	C3J	-.19926119 01	TFI	.00000000 00
ZAE	.13527120 03	ZAP	.15105150 03	ZAC	.97103777 02	DEF	.22117329-01	IR	.17736282 04	GP	-.74864319 01
OP1	-.22125147 02	OY	-.27959463 01	OP2	.39724537 02						

CASE 5 SPACE TRAJECTORIES 3

EARTH-MOON,3X3 SEARCH CHECK 4

ALL VECTORS REFERENCED TO EARTH EQUATOR PLANE

X	-.33163554 06	Y	.16002791 06	Z	.93847083 05	DX	.30774295 01	DY	-.96721085 01	DZ	-.57587111 01
INC	.30838847 02	LAN	.35951025 03	APF	.19571627 03	MX	-.48818330 00	MY	-.74825492 00	MZ	-.44921225 00
WX	-.43814893-02	WY	-.51260643 00	WZ	.85861252 00	PX	-.96456749 00	PY	-.22433974 00	PZ	-.13885686 00
QX	.26379983 00	QY	-.82879810 00	QZ	-.49346056 00	RX	-.14960081 00	RY	.47025644 00	RZ	-.86975769 00
BX	-.96460253 00	BY	-.22422967 00	BZ	-.13879132 00	TX	-.95294114 00	TY	-.30315537 00	TZ	.00000000 00
SXI	.26367172 00	SYI	-.82882790 00	SZI	-.49347900 00	DAI	-.29569504 02	RAI	.28764722 03		
SXO	.26392794 00	SYO	-.82876830 00	SZO	-.49344211 00	DAO	-.29567075 02	RAO	.28766450 03		
ETE	.18934792 03	ETS	.19991166 03	ETC	.27721584 03						
B.T	.26753071 06	B.R	.43245282 05	B	.27100338 06	THA	.91822124 01				

ALL VECTORS REFERENCED TO ORBIT PLANE OF TARGET

X	.37996346 06	Y	.51070683 04	Z	-.16460742 03	DX	-.82910510 01	DY	.80703059 01	DZ	-.15204086 01
INC	.10552107 02	LAN	.18063681 03	APF	.22465287 03	MX	-.36878244 00	MY	-.85746851 00	MZ	.15895574 00
WX	-.20353910-02	WY	.18311835 00	WZ	.98308877 00	PX	.70365446 00	PY	.69878846 00	PZ	-.12870534 00
QX	-.71053941 00	QY	.69149283 00	QZ	-.13027435 00	RX	.93360858-01	RY	-.90882394-01	RZ	-.99147573 00
BX	.70374884 00	BY	.69869663 00	BZ	-.12868804 00	TX	.69753158 00	TY	.71655405 00	TZ	.00000000 00
SXI	-.71044595 00	SYI	.69158563 00	SZI	-.13029144 00	DAI	-.74864354 01	RAI	.13577070 03		
SXO	-.71063286 00	SYO	.69140001 00	SZO	-.13025725 00	DAO	-.74844597 01	RAO	.13578592 03		
ETE	.18762342 03	ETS	.19818716 03	ETC	.27549134 03						
B.T	.26871095 06	B.R	.35174733 05	B	.27100338 06	THA	.74577148 01				

2 DAYS 10 HRS. 32 MIN. 17.778 SEC. JULIAN DATE 2438250.65085052 AUG. 9,1963 03 37 13.485

GEOCENTRIC EQUATORIAL COORDINATES

X	.33724209 06	Y	.62352877 05	Z	-.75166054 04	DX	.82877812 00	DY	.28285170 00	DZ	.67085724-01
R	.34304023 06	DEC	-.12555493 01	RA	.10475156 02	V	.87828170 00	PTH	.79915439 02	AZ	.55974645 02
R	.34304023 06	LAT	-.12555493 01	LON	.35925261 03	VE	.24896593 02	PTE	.19904059 01	AZE	.27019816 03
XS	-.10883143 09	YS	.96922366 08	ZS	.42028393 08	DXS	-.20261853 02	DYS	-.19500922 02	DZS	-.84566202 01
XM	.36796134 06	YM	.39161427 05	ZM	-.18401635 05	DXM	-.98771297-01	DYM	.97835270 00	DZM	.39713889 00
XT	.36796134 06	YT	.39161427 05	ZT	-.18401635 05	DXT	-.98771297-01	DYT	.97835270 00	DZT	.39713889 00
RS	.15167271 09	VS	.29365678 02	RM	.37049668 06	VM	.10604947 01	RT	.37049668 06	VT	.10604947 01
GED	-.12641028 01	ALT	.33666203 06	LOS	.12709005 03	RAS	.13831259 03	RAM	.60750113 01	LOM	.35485247 03
DUT	.35000000 02	DT	.19200000 04	DR	.86471261 00	SHA	.27562575 06	DES	.16087153 02	DEM	-.28469073 01
DAC	.00000000 00										

GEOCENTRIC CONIC

EPOCH OF PERICENTER PASSAGE JULIAN DATE 2438248.28675128 AUG. 6,1963 18 52 55.311

SMA	.25673840 06	ECC	.98630826 00	B	.42339277 05	SLR	.69822598 04	APO	.50996160 06	RCA	.35151944 04
VH	.10345009 00	C3	-.15525656 01	C1	.52755579 05	TFP	.20425817 06	TF	.17998900 01	PER	.21577169 05
TA	.17333670 03	MTA	.00000000 00	EA	.10992644 03	MA	.56798416 02	C3J	-.20677371 01	TFI	.58538271 02

ALL VECTORS REFERENCED TO EARTH EQUATOR PLANE

X	.33724209 06	Y	.62352877 05	Z	-.75166054 04	DX	.82877812 00	DY	.28285170 00	DZ	.67085724-01
INC	.34045730 02	LAN	.12334006 02	APF	.18442025 03	MX	-.13862501 00	MY	.81720636 00	MZ	.55942530 00
WX	.11959062 00	WY	-.54693225 00	WZ	.82859097 00	PX	-.96037184 00	PY	-.27536174 00	PZ	-.43148852-01
QX	.25176179 00	QY	-.79059522 00	QZ	-.55818900 00	RX	.41477573-01	RY	.11892619-01	RZ	-.99906865 00
BX	-.25176182 00	BY	.79059532 00	BZ	.55818908 00	TX	-.27561844 00	TY	.96126712 00	TZ	.00000000 00
DAP	-.24730142 01	RAP	.19599887 03								
B.T	.35114650 05	B.R	-.23655353 05	B	.42339277 05	THA	.32603340 03				

CASE 5 SPACE TRAJECTORIES 4

EARTH-MOON,3X3 SEARCH CHECK 4

ALL VECTORS REFERENCED TO ORBIT PLANE OF TARGET

X	-.34189832 06	Y	-.27946551 05	Z	-.10614024 04	DX	-.84967210 00	DY	-.22044034 00	DZ	.29019219-01
INC	.11894951 02	LAN	.18551458 03	APF	.18580315 03	MX	-.18235793 00	MY	.96155381 00	MZ	-.20529509 00
WX	-.19807626-01	WY	.20516246 00	WZ	.97852715 00	PX	.98076253 00	PY	.19408895 00	PZ	-.20840697-01
QX	-.19419699 00	QY	.95928994 00	QZ	-.20506009 00	RX	-.20444215-01	RY	-.40458276-02	RZ	-.99978280 00
BX	.19419706 00	BY	-.95929029 00	BZ	.20506016 00	TX	.19413111 00	TY	-.98097560 00	TZ	.00000000 00
DAP	-.11941698 01	RAP	.11193970 02								
B.T	.41439146 05	B.R	-.86839847 04	B	.42339277 05	THA	.34816437 03				

HELIOCENTRIC ECLIPTIC COORDINATES

X	.10916868 09	Y	-.10558825 09	Z	-.31302000 05	DX	.21090631 02	DY	.21541789 02	DZ	-.50653099-01
R	.15187718 09	LAT	-.11808702-01	LON	.31595514 03	V	.30147403 02	PTH	.34885447 00	AZ	.90096197 02
XE	.10883143 09	YE	-.10564246 09	ZE	.40050000 03	DXE	.20261853 02	DYE	.21255596 02	DZE	.32848119-03
XT	.10919940 09	YT	-.10561386 09	ZT	-.32062000 05	DXT	.20163081 02	DYT	.22311188 02	DZT	-.24541855-01
LTE	.15129260-03	LOE	.31585186 03	LTT	-.12092237-01	LOT	.31595625 03	RST	.15191707 09	VST	.30072239 02
EPS	.53359672 02	ESP	.10397499 00	SEP	.12653634 03	EPM	.13096352 03	EMP	.44360195 02	MEP	.46762754 01
MPS	.17563507 03	MSP	.27453512-18	SMP	.43637672 01	SEM	.13121217 03	EMS	.48682709 02	ESM	.10467832 00
EPT	.13096352 03	ETP	.44360195 02	TEP	.46762754 01	TPS	.17563507 03	TSP	.27453512-18	STP	.43637672 01
SET	.13121217 03	STE	.48682709 02	EST	.10467832 00	RPM	.40000000 05	RPT	.40000000 05	SPN	.52294336 02
GCE	.10412073 03	GCT	.29181346 03	SIP	.17314478 03	CPT	.10038592 03	SIN	.97895631 02	D1	.13047322 01
REP	.34304023 06	VEP	.87828170 00	CPE	.93841596 02	CPS	.77963118 02	D2	.13040324 01	D3	.74360395 00

HELIOCENTRIC CONIC

EPOCH OF PERICENTER PASSAGE JULIAN DATE 2438241.51303513 JULY 31,1963 00 18 46.235

SMA	.15822023 09	ECC	.40549215-01	B	.15808912 09	SLR	.15796008 09	APO	.16463594 09	RCA	.15180453 09
VH	.27810561 02	C3	-.83880195 03	C1	.45786180 10	TFP	.78950725 06	TF	-.16076929 03	PER	.39728158 03
TA	.89847319 01	MTA	.00000000 00	EA	.86288781 01	MA	.82803071 01			TFI	.58538271 02

ALL VECTORS REFERENCED TO ECLIPTIC PLANE

X	.10916868 09	Y	-.10558825 09	Z	-.31302000 05	DX	.21090631 02	DY	.21541789 02	DZ	-.50653099-01
INC	.96407211-01	LAN	.12895681 03	APF	.17801357 03	MX	.63745695 00	MY	.71915880 00	MZ	-.16033631-02
WX	.13153911-02	WY	.10635421-02	WZ	.99999858 00	PX	.60139961 00	PY	-.79894271 00	PZ	.58633618-04
QX	.79894164 00	QY	.60139868 00	QZ	-.16905359-02	RX	.35262394-04	RY	-.46845114-04	RZ	-.99999547 00
BX	-.79894526 00	BY	-.60140139 00	BZ	.16905435-02	TX	-.79894633 00	TY	-.60140233 00	TZ	.00000000 00
DAP	.33594589-02	RAP	.30697040 03								
B.T	.15808916 09	B.R	-.26725578 06	B	.15808938 09	THA	.35990313 03				

ALL VECTORS REFERENCED TO ORBIT PLANE OF TARGET

X	-.10027137 09	Y	.11391518 09	Z	.59718075 07	DX	-.22614094 02	DY	-.19788152 02	DZ	.24285253 01
INC	.51305407 01	LAN	.10536139 03	APF	.17099723 02	MX	.62864044 00	MY	.73978245 00	MZ	-.72021566-01
WX	.86230593-01	WY	.23689365-01	WZ	.99599354 00	PX	-.53558946 00	PY	.84406518 00	PZ	.26294176-01
QX	-.84006057 00	QY	-.53571099 00	QZ	.85472015-01	RX	-.14087800-01	RY	.22201747-01	RZ	-.99965098 00
BX	.84006331 00	BY	.53571273 00	BZ	-.85472293-01	TX	.84435987 00	TY	.53577644 00	TZ	.00000000 00
DAP	.15067175 01	RAP	.12239658 03								
B.T	.15751065 09	B.R	.13516908 08	B	.15808957 09	THA	.49048663 01				

CASE 5 SPACE TRAJECTORIES 5

EARTH-MOON,3X3 SEARCH CHECK 4

SELENOCENTRIC EQUATORIAL COORDINATES

X	-.30719258 05	Y	.23191450 05	Z	.10885030 05	DX	.92754941 00	DY	-.69550099 00	DZ	-.33005316 00
R	.40000000 05	DEC	.15790799 02	RA	.14294908 03	V	.12054064 01	PTH	-.89793465 02	AZ	.24087089 03
R	.39999997 05	LAT	.18542683 01	LON	.31346116 03	VR	.12103780 01	PTR	-.84800981 02	AZR	.26828999 03
LTS	.68038672 00	LNS	.30925715 03	LTE	.64780220 01	LNE	.35771511 03				
ALT	.38262000 05	SHA	-.30435397 04	ALP	.14256987 02	DR	-.12053986 01	DP	.62174570-05	ASD	.24902844 01
HGE	.30664033 03	SVL	.58373443 00	HNG	.17567422 03	SIA	.12847323 03				

SELENOCENTRIC CONIC

EPOCH OF PERICENTER PASSAGE JULIAN DATE 2438250.98144192 AUG. 9,1963 11 33 16.582

SMA	-.40570316 04	ECC	.10007594 01	B	.15797283 03	SLR	.61639431 01	APO	.00000000 00	RCA	.30808018 01
VH	.10990754 01	C3	.12079667 01	C1	.17380449 03	TFP	-.28563096 05	TF	.66472464 02	LTF	.66471685 02
TA	-.17755176 03	MTA	.17776781 03	EA	-.17620122 03	MA	-.44335030 03	C3J	-.20677371 01	TFI	.58538271 02
ZAE	.13580111 03	ZAP	.17545446 03	ZAC	.10020695 03	DEF	.17553571 03	IR	.41379808 04	GP	.13729764 01
OP1	.36640327 02	OY	.77303736 00	OP2	-.40963523 02						

ALL VECTORS REFERENCED TO EARTH EQUATOR PLANE

X	-.30719258 05	Y	.23191450 05	Z	.10885030 05	DX	.92754941 00	DY	-.69550099 00	DZ	-.33005316 00
INC	.14710725 03	LAN	.29692132 03	APF	.32737115 03	MX	.42016442 00	MY	.77616858 00	MZ	-.46792116 00
WX	-.48250978 00	WY	-.24501717 00	WZ	-.83968861 00	PX	.78522881 00	PY	-.54610182 00	PZ	-.29186552 00
QX	-.38698250 00	QY	-.80022123 00	QZ	.45587171 00	RX	-.21915375 00	RY	.16427556 00	RZ	-.96176147 00
BX	.41770617 00	BY	.77915256 00	BZ	-.46737868 00	TX	-.59979026 00	TY	-.80015726 00	TZ	.00000000 00
SXI	.76956043 00	SYI	-.57685517 00	SZI	-.27388835 00	DAI	-.15895777 02	RAI	.32314512 03		
SXO	-.79970552 00	SYO	.51451968 00	SZO	.30939975 00	DAO	.18023059 02	RAO	.14724332 03		
ETE	.19263731 03	ETS	.28183648 01	ETC	.29694949 03						
B.T	-.13806520 03	B.R	.76768580 02	B	.15797283 03	THA	.15092457 03				

ALL VECTORS REFERENCED TO ORBIT PLANE OF TARGET

X	.28598346 05	Y	-.27946521 05	Z	-.10613971 04	DX	-.86408078 00	DY	.83995647 00	DZ	.29019221-01
INC	.13689135 03	LAN	.13728349 03	APF	.35977827 03	MX	.56007358 00	MY	.43436790 00	MZ	.65515885 00
WX	.46413854 00	WY	.50269147 00	WZ	-.73005924 00	PX	-.73663080 00	PY	.67629155 00	PZ	-.26474609-02
QX	.49243658 00	QY	.53897708 00	QZ	.68418960 00	RX	-.17182917-01	RY	.16699133-01	RZ	-.99971289 00
BX	-.52042137 00	BY	-.51198693 00	BZ	-.68339666 00	TX	.69693933 00	TY	.71713009 00	TZ	.00000000 00
SXI	-.71692421 00	SYI	.69673924 00	SZI	.23960670-01	DAI	.13729756 01	RAI	.13581804 03		
SXO	.75522304 00	SYO	-.65482076 00	SZO	.29251587-01	DAO	.16762309 01	RAO	.31907287 03		
ETE	.17858766 03	ETS	.34876872 03	ETC	.28289985 03						
B.T	-.11529864 03	B.R	.10798919 03	B	.15797292 03	THA	.13687494 03				

2 DAYS 17 HRS. 54 MIN. 17.778 SEC. JULIAN DATE 2438250.95779496 AUG. 9,1963 10 59 13.485

RECTIFICATION .81540346-02 -.10680356 03 -.63911771 02 -.13354942 02

2 DAYS 18 HRS. 21 MIN. 3.539 SEC. JULIAN DATE 2438250.97638016 AUG. 9,1963 11 25 59.246

GEOCENTRIC EQUATORIAL COORDINATES

X	.36266867 06	Y	.67514687 05	Z	-.67785798 04	DX	.18368614 01	DY	-.54947527 00	DZ	-.29046609 00
R	.36896171 06	DEC	-.10526986 01	RA	.10545514 02	V	.19391631 01	PTH	.61883333 02	AZ	.25353036 03
R	.36896170 06	LAT	-.10526986 01	LON	.24181147 03	VE	.27830752 02	PTE	.35232967 01	AZE	.26946559 03
XS	-.10939969 09	YS	.96372423 08	ZS	.41789915 08	DXS	-.20146105 02	DYS	-.19604469 02	DZS	-.85014251 01
XM	.36403311 06	YM	.66519062 05	ZM	-.71884423 04	DXM	-.18046338 00	DYM	.96600301 00	DZM	.39980652 00
XT	.36403311 06	YT	.66519062 05	ZT	-.71884423 04	DXT	-.18046338 00	DYT	.96600301 00	DZT	.39980652 00
RS	.15166520 09	VS	.29367924 02	RM	.37013047 06	VM	.10609308 01	RT	.37013047 06	VT	.10609308 01
GED	-.10598709 01	ALT	.36258351 06	LOS	.98884678 01	RAS	.13862251 03	RAM	.10355304 02	LOM	.24162126 03
DUT	.35000000 02	DT	.59999999 02	DR	.17103221 01	SHA	.29577406 06	DES	.15994230 02	DEM	-.11128316 01
DAC	.00000000 00										

CASE 5 SPACE TRAJECTORIES 6

EARTH-MOON,3X3 SEARCH CHECK 4

GEOCENTRIC CONIC

EPOCH OF PERICENTER PASSAGE JULIAN DATE 2438248.96176540 AUG. 7,1963 11 04 56.532

SMA	-.24917710 06	ECC	.14644681 01	B	.26659233 06	SLR	.28522475 06	APO	.00000000 00	RCA	.11573481 06
VH	.12647839 01	C3	.15996783 01	C1	.33718170 06	TFP	.17406271 06	TF	.18000229 02	LTF	-.28770947 01
TA	.98915228 02	MTA	.13306611 03	EA	.64103132 02	MA	.50621683 02	C3J	-.20885788 01	TFI	.66350982 02
ZAE	.12781923 03	ZAP	.74888213 02	ZAC	.71391267 02	DEF	.86132221 02	IR	.29481523 05	GP	-.44699805 01

ALL VECTORS REFERENCED TO EARTH EQUATOR PLANE

X	.36266867 06	Y	.67514687 05	Z	-.67785798 04	DX	.18368614 01	DY	-.54947527 00	DZ	-.29046609 00
INC	.16349767 03	LAN	.19410151 03	APF	.84793129 02	MX	.17038672 00	MY	-.94372616 00	MZ	-.28345935 00
WX	-.69207161-01	WY	.27549429 00	WZ	-.95880821 00	PX	-.32065799 00	PY	.90396691 00	PZ	.28288197 00
QX	.94466332 00	QY	.32702696 00	QZ	.25778455-01	RX	-.16094830 00	RY	.66984020-01	RZ	-.98468714 00
BX	.41079369 00	BY	.88371547 00	BZ	.22426664 00	TX	-.38423524 00	TY	-.92323523 00	TZ	.00000000 00
SXI	.47118051 00	SYI	.85618125 00	SZI	.21199650 00	DAI	.12239379 02	RAI	.61174780 02		
SXO	.90909786 00	SYO	-.37835150 00	SZO	-.17433076 00	DAO	-.10039716 02	RAO	.33740372 03		
ETE	.11159452 02	ETS	.13479138 02	ETC	.29130770 03						
B.T	-.26155598 06	B.R	-.51574592 05	B	.26659233 06	THA	.19115469 03				

ALL VECTORS REFERENCED TO ORBIT PLANE OF TARGET

X	-.36895947 06	Y	-.12803464 04	Z	-.10270349 03	DX	-.17134926 01	DY	.90346255 00	DZ	.89732296-01
INC	.17433501 03	LAN	.18003803 03	APF	.26092318 03	MX	.18027841 00	MY	-.97814450 00	MZ	-.97039425-01
WX	-.65542314-04	WY	.98711057-01	WZ	-.99511609 00	PX	.15841073 00	PY	-.98255005 00	PZ	-.97474996-01
QX	-.98737330 00	QY	-.15764341 00	QZ	-.15572487-01	RX	-.45844990-01	RY	.30715309-01	RZ	-.99847624 00
BX	-.55849029 00	BY	-.82546345 00	BZ	-.81845492-01	TX	.55660544 00	TY	.83077698 00	TZ	.00000000 00
SXI	-.61317212 00	SYI	-.78609522 00	SZI	-.77936737-01	DAI	-.44699788 01	RAI	.23204495 03		
SXO	-.82951108 00	SYO	.55575731 00	SZO	.55183271-01	DAO	.31633747 01	RAO	.14617863 03		
ETE	.35652113 03	ETS	.35884082 03	ETC	.27666938 03						
B.T	-.26609973 06	B.R	.16199008 05	B	.26659234 06	THA	.17651638 03				

HELIOCENTRIC ECLIPTIC COORDINATES

X	.10976236 09	Y	-.10498380 09	Z	-.32670500 05	DX	.21982966 02	DY	.20748744 02	DZ	-.47647535-01
R	.15188606 09	LAT	-.12324250-01	LON	.31627474 03	V	.30228520 02	PTH	.29291769 01	AZ	.90089800 02
XE	.10939969 09	YE	-.10504304 09	ZE	.40850000 03	DXE	.20146105 02	DYE	.21368421 02	DZE	.23901462-03
XT	.10976373 09	YT	-.10498487 09	ZT	-.32650500 05	DXT	.19965642 02	DYT	.22413744 02	DZT	-.17270803-01
LTE	.15432232-03	LOE	.31616387 03	LTT	-.12316565-01	LOT	.31627480 03	RST	.15188779 09	VST	.30016713 02
EPS	.53175315 02	ESP	.11102813 00	SEP	.12671311 03	EPM	.13215565 03	EMP	.47644886 02	MEP	.19966949 00
MPS	.17450570 03	MSP	.27453512-18	SMP	.54942255 01	SEM	.12691247 03	EMS	.52975887 02	ESM	.11146784 00
EPT	.13215565 03	ETP	.47644886 02	TEP	.19966949 00	TPS	.17450570 03	TSP	.27453512-18	STP	.54942255 01
SET	.12691247 03	STE	.52975887 02	EST	.11146784 00	RPM	.17380898 04	RPT	.17380898 04	SPN	.52184831 02
GCE	.10400475 03	GCT	.27052780 03	SIP	.85088357 02	CPT	.10188794 03	SIN	.12470601 02	D1	.29504893 04
REP	.36896171 06	VEP	.19391631 01	CPE	.93722770 02	CPS	.78005618 02	D2	.33022192 02	D3	.30168170 07

HELIOCENTRIC CONIC

EPOCH OF PERICENTER PASSAGE JULIAN DATE 2438200.64120583 JUNE 20,1963 03 23 20.184

SMA	.15916894 09	ECC	.68552615-01	B	.15879481 09	SLR	.15842093 09	APO	.17008038 09	RCA	.14825749 09
VH	.26959558 02	C3	-.83380240 03	C1	.45852921 10	TFP	.43489590 07	TF	-.11416932 04	PER	.40086012 03
TA	.51125514 02	MTA	.00000000 00	EA	.48129286 02	MA	.45204452 02			TFI	.66350982 02

ALL VECTORS REFERENCED TO ECLIPTIC PLANE

X	.10976236 09	Y	-.10498380 09	Z	-.32670500 05	DX	.21982966 02	DY	.20748744 02	DZ	-.47647535-01
INC	.90112856-01	LAN	.12846020 03	APF	.13668898 03	MX	.63378866 00	MY	.72300251 00	MZ	-.14965163-02
WX	.12387632-02	WY	.98395292-03	WZ	.99999876 00	PX	-.84560591-01	PY	-.99641722 00	PZ	.10851795-02
QX	.99641703 00	QY	-.84561827-01	QZ	-.11511213-02	RX	-.91763524-04	RY	-.10812928-02	RZ	-.99999888 00
BX	-.99641757 00	BY	.84561872-01	BZ	.11511219-02	TX	-.99641833 00	TY	.84560686-01	TZ	.00000000 00

EARTH-MOON,3X3 SEARCH CHECK 4

DAP	.62177772-01	RAP	.26514923 03				
B.T	.15879429 09	B.R	-.18279172 06	B	.15879440 09	THA	.35993404 03

ALL VECTORS REFERENCED TO ORBIT PLANE OF TARGET

X	-.91458233 08	Y	.12111252 09	Z	.60434365 07	DX	-.24885882 02	DY	-.16979239 02	DZ	.24822871 01
INC	.51358654 01	LAN	.10075961 03	APF	.33526476 03	MX	.62691572 00	MY	.74396201 00	MZ	-.67838930-01
WX	.87944017-01	WY	.16711989-01	WZ	.99598522 00	PX	.23985841 00	PY	.97008536 00	PZ	-.37456547-01
QX	-.96681666 00	QY	.24218952 00	QZ	.81304692-01	RX	-.89905739-02	RY	-.36361552-01	RZ	-.99929857 00
BX	.96681634 00	BY	-.24218944 00	BZ	-.81304666-01	TX	.97076627 00	TY	-.24002677 00	TZ	.00000000 00
DAP	-.21466038 01	RAP	.76111880 02								
B.T	.15826806 09	B.R	.12919806 08	B	.15879452 09	THA	.46668436 01				

SELENOCENTRIC EQUATORIAL COORDINATES

X	-.13644410 04	Y	.99562533 03	Z	.40986247 03	DX	.20173248 01	DY	-.15154783 01	DZ	-.69027261 00
R	.17380898 04	DEC	.13639492 02	RA	.14388197 03	V	.26158650 01	PTH	-.88168570 02	AZ	.15517661 03
R	.17380896 04	LAT	.14066262 00	LON	.31075348 03	VR	.26157641 01	PTR	-.88238759 02	AZR	.13750529 03
LTS	.69002412 00	LNS	.30528661 03	LTE	.66022912 01	LNE	.35807064 03				
ALT	.89859008-01	SHA	-.16641416 03	ALP	.70245832 01	DR	-.26145288 01	DP	.27558274-02	ASD	.89417339 02
HGE	.30682468 03	SVL	-.12786114 01	HNG	.17465610 03	SIA	.42738314 02				

SELENOCENTRIC CONIC

EPOCH OF PERICENTER PASSAGE JULIAN DATE 2438250.98171198 AUG. 9,1963 11 33 39.915

SMA	-.40720788 04	ECC	.10005288 01	B	.13244855 03	SLR	.43080062 01	APO	.00000000 00	RCA	.21534337 01
VH	.10970428 01	C3	.12035029 01	C1	.14530141 03	TFP	-.46066881 03	TF	.66478945 02	LTF	.66478400 02
TA	-.17555647 03	MTA	.17813705 03	EA	-.51173083 02	MA	-.71108061 01	C3J	-.20885788 01	TFI	.66350982 02
ZAE	.13080400 03	ZAP	.17613645 03	ZAC	.10030204 03	DEF	.17627417 03	IR	.41442961 04	GP	.13839824 01
OP1	.36824685 02	OY	.23984831 00	OP2	-.41061735 02						

ALL VECTORS REFERENCED TO EARTH EQUATOR PLANE

X	-.13644410 04	Y	.99562533 03	Z	.40986247 03	DX	.20173248 01	DY	-.15154783 01	DZ	-.69027261 00
INC	.65921555 02	LAN	.33010701 03	APF	.34058822 03	MX	-.42035853 00	MY	-.21297983 00	MZ	-.88201860 00
WX	-.45502112 00	WY	-.79153075 00	WZ	.40798697 00	PX	.75009570 00	PY	-.58760643 00	PZ	-.30343896 00
QX	.47991603 00	QY	.16795916 00	QZ	.86109746 00	RX	-.21914336 00	RY	.16660831 00	RZ	-.96136249 00
BX	-.45527364 00	BY	-.18697087 00	BZ	-.87049861 00	TX	-.60521993 00	TY	-.79605832 00	TZ	.00000000 00
SXI	.76530060 00	SYI	-.58183574 00	SZI	-.27528556 00	DAI	-.15979031 02	RAI	.32275533 03		
SXO	-.73409788 00	SYO	.59275596 00	SZO	.33127160 00	DAO	.19345973 02	RAO	.14108045 03		
ETE	.19273937 03	ETS	.46362214 00	ETC	.29677517 03						
B.T	.56208567 02	B.R	.11993004 03	B	.13244855 03	THA	.64888547 02				

ALL VECTORS REFERENCED TO ORBIT PLANE OF TARGET

X	.11709924 04	Y	-.12803071 04	Z	-.10269747 03	DX	-.17251400 01	DY	.19643293 01	DZ	.89732251-01
INC	.50967766 02	LAN	.12969613 03	APF	.35991881 03	MX	-.24374484 00	MY	-.63531773 00	MZ	.73186245 00
WX	.59769399 00	WY	.49614708 00	WZ	.62975749 00	PX	-.63802885 00	PY	.77001163 00	PZ	-.11004414-02
QX	-.48546696 00	QY	-.40114531 00	QZ	.77678751 00	RX	-.15787533-01	RY	.18278141-01	RZ	-.99970826 00
BX	.46447027 00	BY	.42596640 00	BZ	-.77641485 00	TX	.75678478 00	TY	.65366413 00	TZ	.00000000 00
SXI	-.65347344 00	SYI	.75656400 00	SZI	.24152363-01	DAI	.13839619 01	RAI	.13081843 03		
SXO	.62190980 00	SYO	-.78264529 00	SZO	.26352083-01	DAO	.15100378 01	RAO	.30847155 03		
ETE	.17880490 03	ETS	.34652885 03	ETC	.28284068 03						
B.T	.83434068 02	B.R	.10286383 03	B	.13244701 03	THA	.50954080 02				

CASE 5 SPACE TRAJECTORIES 8

EARTH-MOON,3X3 SEARCH CHECK 4

B.T /X	.65892752 03	B.T /Y	.22452754 03	B.T /Z	.41034870 02
B.R /X	-.91296562 02	B.R /Y	-.74265168 02	B.R /Z	.33932626 02
T(F) /X	.25153160 00	T(F) /Y	.10591507 00	T(F) /Z	.31499862-01
DELTA X	.26498165-01	DELTA Y	-.11348839-02	DELTA Z	-.15587374-01
B.TB.R/X	.66522218 03	B.TB.R/Y	.23649086 03	B.TB.R/Z	.53247381 02

CASE 6 SPACE TRAJECTORIES 1

EARTH-MOON,3X3 SEARCH CHECK 4
EPHEMERIS TAPE III WITH SATURN. B-8 IS T-1456

GME	.39860320 06	J	.16234500-02	H	-.57499999-05	D	.78749999-05	RE	.63781650 04	REM	.63783149 04
G	.66709998-19	A	.88745998 29	B	.88763998 29	C	.88800998 29	OME	.41780741-02	AU	.14959900 09
GMM	.49007589 04	GMS	.13271544 12	GMV	.32476950 06	GMA	.42977799 05	GMC	.37918700 08	GMJ	.12671060 09

INJECTION CONDITIONS MOON JULIAN DATE 2438248.21175586 AUG. 6,1963 17 04 55.707

GEOCENTRIC X0-.61068854 04 Y0-.23615430 04 Z0-.55015410 03 DX0 .35627328 01 DY0-.87922522 01 DZ0-.54547869 01
CARTESIAN GMC .00000000 00 SGC .00000000 00 T0 .61495706 05 GHA .21074440 03 GHD .31381078 03

0 DAYS 0 HRS. 0 MIN. 0.000 SEC. JULIAN DATE 2438248.21175586 AUG. 6,1963 17 04 55.707

GEOCENTRIC EQUATORIAL COORDINATES

X	-.61068852 04	Y	-.23615429 04	Z	-.55015408 03	DX	.35627326 01	DY	-.87922516 01	DZ	-.54547867 01
R	.65706620 04	DEC	-.48029334 01	RA	.20114157 03	V	.10943100 02	PTH	.15995142 01	AZ	.11987261 03
R	.65706620 04	LAT	-.48029343 01	LON	.35039717 03	VE	.10531933 02	PTE	.16619762 01	AZE	.12116699 03
XS	-.10447151 09	YS	.10094913 09	ZS	.43774604 08	DXS	-.21109277 02	DYS	-.18709437 02	DZS	-.81140054 01
XM	.32552863 06	YM	-.16238945 06	ZM	-.94397222 05	DXM	.48530311 00	DYM	.87985689 00	DZM	.30392435 00
XT	.32552863 06	YT	-.16238945 06	ZT	-.94397222 05	DXT	.48530311 00	DYT	.87985689 00	DZT	.30392435 00
RS	.15172752 09	VS	.29351008 02	RM	.37583248 06	VM	.10497796 01	RT	.37583248 06	VT	.10497796 01
GED	-.48355106 01	ALT	.19260712 03	LOS	.28523796 03	RAS	.13598236 03	RAM	.33348775 03	LOM	.12274336 03
DUT	.35000000 02	DT	.15000000 02	DR	.30545677 00	SHA	-.60867276 04	DES	.16768653 02	DEM	-.14546658 02
DAC	.00000000 00										

GEOCENTRIC CONIC

EPOCH OF PERICENTER PASSAGE JULIAN DATE 2438248.21136293 AUG. 6,1963 17 04 21.758

SMA	.25280590 06	ECC	.97402958 00	B	.57240516 05	SLR	.12960440 05	APO	.49904632 06	RCA	.65654743 04
VH	.14402550 00	C3	-.15767163 01	C1	.71875399 05	TFP	.33949195 02	TF	-.94303318-02	PER	.21083321 05
TA	.32416901 01	MTA	.00000000 00	EA	.37191788 00	MA	.96614362-02	C3J	-.19930334 01	TFI	.00000000 00

ALL VECTORS REFERENCED TO EARTH EQUATOR PLANE

X	-.61068852 04	Y	-.23615429 04	Z	-.55015408 03	DX	.35627326 01	DY	-.87922516 01	DZ	-.54547867 01
INC	.30221037 02	LAN	.12847969 02	APF	.18633382 03	MX	.35164885 00	MY	-.79372866 00	MZ	-.49632436 00
WX	.11192452 00	WY	-.49073547 00	WZ	.86409004 00	PX	-.94781484 00	PY	-.31394828 00	PZ	-.55528744-01
QX	.29852951 00	QY	-.81278234 00	QZ	-.50026487 00	RX	.52712301-01	RY	.17460094-01	RZ	-.99845705 00
BX	-.29852952 00	BY	.81278237 00	BZ	.50026488 00	TX	-.31443344 00	TY	.94927953 00	TZ	.00000000 00
DAP	-.31831994 01	RAP	.19832661 03								
B.T	.49537392 05	B.R	-.28679669 05	B	.57240516 05	THA	.32993131 03				

ALL VECTORS REFERENCED TO ORBIT PLANE OF TARGET

X	.41309446 04	Y	.51070336 04	Z	-.16463750 03	DX	-.82548937 01	DY	.70211491 01	DZ	-.15204086 01
INC	.80793079 01	LAN	.22086158 03	APF	.18702802 03	MX	.34694012 00	MY	-.92789080 00	MZ	.13183664 00
WX	-.91948473-01	WY	.10629212 00	WZ	.99007448 00	PX	.67135546 00	PY	.74093593 00	PZ	-.17196221-01
QX	-.73540957 00	QY	.66311074 00	QZ	-.13948772 00	RX	-.11546485-01	RY	-.12743183-01	RZ	-.99985208 00
BX	.73540960 00	BY	-.66311077 00	BZ	.13948773 00	TX	.74104553 00	TY	-.67145477 00	TZ	.00000000 00
DAP	-.98531881 00	RAP	.47820552 02								
B.T	.56680681 05	B.R	-.79855196 04	B	.57240441 05	THA	.35198060 03				

CASE 6 SPACE TRAJECTORIES 2

EARTH-MOON,3X3 SEARCH CHECK 4

HELIOCENTRIC ECLIPTIC COORDINATES

X	.10446541 09	Y	-.11003394 09	Z	.70350000 03	DX	.24672009 02	DY	.10156514 02	DZ	-.15057296 01
R	.15172504 09	LAT	.26566200-03	LON	.31351290 03	V	.26723211 02	PTH	.21102622 02	AZ	.93462628 02
XE	.10447151 09	YE	-.11003155 09	ZE	.26900000 03	DXE	.21109277 02	DYE	.20393138 02	DZE	.89174508-03
XT	.10479704 09	YT	-.11021809 09	ZT	-.21731000 05	DXT	.21594580 02	DYT	.21321280 02	DZT	-.70312797-01
LTE	.10158055-03	LOE	.31351519 03	LTT	-.81867271-02	LOT	.31355574 03	RST	.15208697 09	VST	.30346793 02
EPS	.11212501 03	ESP	.27453512-18	SEP	.67872693 02	EPM	.50275606 02	EMP	.77043845 00	MEP	.12895393 03
MPS	.16224059 03	MSP	.43114612-01	SMP	.17715739 02	SEM	.16300445 03	EMS	.16954157 02	ESM	.41377734-01
EPT	.50275606 02	ETP	.77043845 00	TEP	.12895393 03	TPS	.16224059 03	TSP	.43114612-01	STP	.17715739 02
SET	.16300445 03	STE	.16954157 02	EST	.41377734-01	RPM	.37999778 06	RPT	.37999778 06	SPN	.36034081 02
GCE	.28108830 03	GCT	.28815369 03	SIP	.16197853 03	CPT	.96371585 02	SIN	.96109529 02	D1	.13721276 00
REP	.65706620 04	VEP	.10943100 02	CPE	.84638973 02	CPS	.77642719 02	D2	.13088664 00	D3	.19645985-02

HELIOCENTRIC CONIC

EPOCH OF PERICENTER PASSAGE JULIAN DATE 2438170.03445913 MAY 20,1963 12 49 37.269

SMA	.12819152 09	ECC	.39870002 00	B	.11756205 09	SLR	.10781398 09	APO	.17930147 09	RCA	.77081557 08
VH	.21096693 02	C3	-.10352903 04	C1	.37826683 10	TFP	.67545184 07	TF	-.18762551 04	PER	.28973057 03
TA	.13654288 03	MTA	.00000000 00	EA	.11741607 03	MA	.97137924 02			TFI	.00000000 00

ALL VECTORS REFERENCED TO ECLIPTIC PLANE

X	.10446541 09	Y	-.11003394 09	Z	.70350000 03	DX	.24672009 02	DY	.10156514 02	DZ	-.15057296 01
INC	.34626484 01	LAN	.13351728 03	APF	.43452708 02	MX	.65214458 00	MY	.69989742 00	MZ	-.57775667-01
WX	.43798238-01	WY	.41588105-01	WZ	.99817438 00	PX	-.99769142 00	PY	.53723335-01	PZ	.41538708-01
QX	-.51897760-01	QY	-.99768935 00	QZ	.43845084-01	RX	-.41478616-01	RY	.22335259-02	RZ	-.99913681 00
BX	.51897765-01	BY	.99768946 00	BZ	-.43845088-01	TX	.53769748-01	TY	.99855337 00	TZ	.00000000 00
DAP	.23806769 01	RAP	.17691773 03								
B.T	.11744879 09	B.R	.51589702 07	B	.11756204 09	THA	.25151181 01				

ALL VECTORS REFERENCED TO ORBIT PLANE OF TARGET

X	-.14509707 09	Y	.44019641 08	Z	.54406495 07	DX	-.16416824 02	DY	-.21065388 02	DZ	.93131950 00
INC	.24577411 01	LAN	.10640551 03	APF	.28019898 03	MX	.66125172 00	MY	.69975308 00	MZ	-.35709444-01
WX	.41136501-01	WY	.12111435-01	WZ	.99908012 00	PX	.89325041 00	PY	.44757384 00	PZ	-.42204782-01
QX	-.44767328 00	QY	.89416490 00	QZ	.75930766-02	RX	-.37733061-01	RY	-.18906603-01	RZ	-.99910892 00
BX	.44767331 00	BY	-.89416495 00	BZ	-.75930770-02	TX	.44797302 00	TY	-.89404708 00	TZ	.00000000 00
DAP	-.24188730 01	RAP	.26613708 02								
B.T	.11755865 09	B.R	.89345376 06	B	.11756205 09	THA	.43544120 00				

SELENOCENTRIC EQUATORIAL COORDINATES

X	-.33163551 06	Y	.16002791 06	Z	.93847068 05	DX	.30774295 01	DY	-.96721085 01	DZ	-.57587111 01
R	.37999778 06	DEC	.14298130 02	RA	.15424076 03	V	.11669747 02	PTH	-.44512019 02	AZ	.11761784 03
R	.37999772 06	LAT	.43719280 01	LON	.35632484 03	VR	.10975067 02	PTR	-.48196320 02	AZR	.96182365 02
LTS	.60773144 00	LNS	.33899399 03	LTE	.43275429 01	LNE	.35555344 03				
ALT	.37825978 06	SHA	-.11563133 06	ALP	.10642156 02	DR	-.81811802 01	DP	.12547451-02	ASD	.26205557 00
HGE	.24787498 03	SVL	-.21501341 01	HNG	.19763293 03	SIA	.50013550 02				

SELENOCENTRIC CONIC

EPOCH OF PERICENTER PASSAGE JULIAN DATE 2438248.47599163 AUG. 6,1963 23 25 25.677

SMA	-.35993385 02	ECC	.75292550 04	B	.27100337 06	SLR	.20404535 10	APO	.00000000 00	RCA	.27096738 06
VH	.11668642 02	C3	.13615721 03	C1	.31622414 07	TFP	-.22829970 05	TF	.63416583 01	LTF	.63340097 01
TA	-.44517359 02	MTA	.90007609 02	EA	-.49811791 02	MA	-.42405834 06	C3J	-.19930334 01	TFI	.00000000 00
ZAE	.13527120 03	ZAP	.15105150 03	ZAC	.97103777 02	DEF	.17132009-01	IR	.17736282 04	GP	-.74864319 01
OP1	-.22125007 02	OY	-.27959900 01	OP2	.39724392 02						

CASE 6 SPACE TRAJECTORIES 3

EARTH-MOON,3X3 SEARCH CHECK 4

ALL VECTORS REFERENCED TO EARTH EQUATOR PLANE

X	-.33163551	06	Y	.16002791	06	Z	.93847068	05	DX	.30774295	01	DY	-.96721085	01	DZ	-.57587111	01
INC	.30838848	02	LAN	.35951025	03	APF	.19571628	03	MX	-.48818331	00	MY	-.74825489	00	MZ	-.44921227	00
WX	-.43815390	-02	WY	-.51260644	00	WZ	.85861250	00	PX	-.96456749	00	PY	-.22433971	00	PZ	-.13885690	00
QX	.26379984	00	QY	-.82879812	00	QZ	-.49346056	00	RX	-.14960081	00	RY	.47025644	00	RZ	-.86975770	00
BX	-.96460253	00	BY	-.22422964	00	BZ	-.13879136	00	TX	-.95294114	00	TY	-.30315537	00	TZ	.00000000	00
SXI	.26367173	00	SYI	-.82882791	00	SZI	-.49347900	00	DAI	-.29569504	02	RAI	.28764722	03			
SXO	.26392795	00	SYO	-.82876831	00	SZO	-.49344212	00	DAO	-.29567075	02	RAO	.28766450	03			
ETE	.18934792	03	ETS	.19991166	03	ETC	.27721584	03									
B.T	.26753069	06	B.R	.43245293	05	B	.27100337	06	THA	.91822159	01						

ALL VECTORS REFERENCED TO ORBIT PLANE OF TARGET

X	.37996343	06	Y	.51070586	04	Z	-.16462012	03	DX	-.82910510	01	DY	.80703059	01	DZ	-.15204086	01
INC	.10552107	02	LAN	.18063680	03	APF	.22465288	03	MX	-.36878246	00	MY	-.85746851	00	MZ	.15895578	00
WX	-.20353541	-02	WY	.18311838	00	WZ	.98308877	00	PX	.70365445	00	PY	.69878845	00	PZ	-.12870539	00
QX	-.71053941	00	QY	.69149282	00	QZ	-.13027435	00	RX	.93360857	-01	RY	-.90882392	-01	RZ	-.99147572	00
BX	.70374884	00	BY	.69869662	00	BZ	-.12868809	00	TX	.69753157	00	TY	.71655405	00	TZ	.00000000	00
SXI	-.71044595	00	SYI	.69158562	00	SZI	-.13029144	00	DAI	-.74864345	01	RAI	.13577070	03			
SXO	-.71063286	00	SYO	.69140001	00	SZO	-.13025725	00	DAO	-.74844597	01	RAO	.13578592	03			
ETE	.18762342	03	ETS	.19818716	03	ETC	.27549134	03									
B.T	.26871092	06	B.R	.35174744	05	B	.27100336	06	THA	.74577183	01						

2 DAYS 10 HRS. 32 MIN. 37.203 SEC. JULIAN DATE 2438250.65107535 AUG. 9,1963 03 37 32.910

GEOCENTRIC EQUATORIAL COORDINATES

X	.33723282	06	Y	.62362384	05	Z	-.75093938	04	DX	.82855237	00	DY	.28284139	00	DZ	.67107541	-01
R	.34303269	06	DEC	-.12543719	01	RA	.10477000	02	V	.87806702	00	PTH	.79912813	02	AZ	.55975515	02
R	.34303268	06	LAT	-.12543719	01	LON	.35917330	03	VE	.24896044	02	PTE	.19899466	01	AZE	.27019816	03
XS	-.10883183	09	YS	.96921988	08	ZS	.42028229	08	DXS	-.20261773	02	DYS	-.19500994	02	DZS	-.84566512	01
XM	.36795942	06	YM	.39180432	05	ZM	-.18393921	05	DXM	-.98827891	-01	DYM	.97834629	00	DZM	.39714158	00
XT	.36795942	06	YT	.39180432	05	ZT	-.18393921	05	DXT	-.98827891	-01	DYT	.97834629	00	DZT	.39714158	00
RS	.15167271	09	VS	.29365679	02	RM	.37049639	06	VM	.10604951	01	RT	.37049639	06	VT	.10604951	01
GED	-.12629174	01	ALT	.33665450	06	LOS	.12700911	03	RAS	.13831280	03	RAM	.60779692	01	LOM	.35477427	03
DUT	.35000000	02	DT	.19200000	04	DR	.86449420	00	SHA	.27562651	06	DES	.16087090	02	DEM	-.28457146	01
DAC	.00000000	00															

GEOCENTRIC CONIC

EPOCH OF PERICENTER PASSAGE JULIAN DATE 2438248.28677788 AUG. 6,1963 18 52 57.610

SMA	.25666762	06	ECC	.98630469	00	B	.42333077	05	SLR	.69821467	04	APO	.50982010	06	RCA	.35151439	04
VH	.10347797	00	C3	-.15529937	01	C1	.52755152	05	TFP	.20427530	06	TF	.18005285	01	PER	.21568247	05
TA	.17333842	03	MTA	.00000000	00	EA	.10994743	03	MA	.56826675	02	C3J	-.20681646	01	TFI	.58543667	02

ALL VECTORS REFERENCED TO EARTH EQUATOR PLANE

X	.33723282	06	Y	.62362384	05	Z	-.75093938	04	DX	.82855237	00	DY	.28284139	00	DZ	.67107541	-01
INC	.34044847	02	LAN	.12334169	02	APF	.18442058	03	MX	-.13866438	00	MY	.81720787	00	MZ	.55941281	00
WX	.11958933	00	WY	-.54691893	00	WZ	.82859960	00	PX	-.96036947	00	PY	-.27536967	00	PZ	-.43151042	-01
QX	.25177139	00	QY	-.79060132	00	QZ	-.55817550	00	RX	.41479580	-01	RY	.11893567	-01	RZ	-.99906854	00
BX	-.25177150	00	BY	.79060166	00	BZ	.55817574	00	TX	-.27562640	00	TY	.96126484	00	TZ	.00000000	00
DAP	-.24731389	01	RAP	.19599934	03												
B.T	.35109888	05	B.R	-.23651326	05	B	.42333077	05	THA	.32603432	03						

CASE 6 SPACE TRAJECTORIES 4

EARTH-MOON,3X3 SEARCH CHECK 4

ALL VECTORS REFERENCED TO ORBIT PLANE OF TARGET

X	-.34189133 06	Y	-.27939719 05	Z	-.10590073 04	DX	-.84945801 00	DY	-.22040961 00	DZ	.29023931-01
INC	.11894017 02	LAN	.18551172 03	APF	.18580329 03	MX	-.18238504 00	MY	.96155249 00	MZ	-.20527828 00
WX	-.19795906-01	WY	.20514801 00	WZ	.97853051 00	PX	.98077171 00	PY	.19404263 00	PZ	-.20839610-01
QX	-.19415192 00	QY	.95930250 00	QZ	-.20504462 00	RX	-.20443340-01	RY	-.40446512-02	RZ	-.99978282 00
BX	.19415197 00	BY	-.95930273 00	BZ	.20504467 00	TX	.19408478 00	TY	-.98098476 00	TZ	.00000000 00
DAP	-.11941083 01	RAP	.11191264 02								
B.T	.41433221 05	B.R	-.86820583 04	B	.42333084 05	THA	.34816528 03				

HELIOCENTRIC ECLIPTIC COORDINATES

X	.10916906 09	Y	-.10558783 09	Z	-.31299000 05	DX	.21090325 02	DY	.21541866 02	DZ	-.50628900-01
R	.15187716 09	LAT	-.11807572-01	LON	.31595536 03	V	.30147245 02	PTH	.34855223 00	AZ	.90096152 02
XE	.10883183 09	YE	-.10564205 09	ZE	.40100000 03	DXE	.20261773 02	DYE	.21255674 02	DZE	.32848119-03
XT	.10919979 09	YT	-.10561342 09	ZT	-.32062000 05	DXT	.20162945 02	DYT	.22311261 02	DZT	-.24536967-01
LTE	.15148148-03	LOE	.31585207 03	LTT	-.12092239-01	LOT	.31595648 03	RST	.15191705 09	VST	.30072202 02
EPS	.53361586 02	ESP	.10350344 00	SEP	.12653443 03	EPM	.13097834 03	EMP	.44346420 02	MEP	.46752176 01
MPS	.17561808 03	MSP	.27453512-18	SMP	.43807561 01	SEM	.13120920 03	EMS	.48685670 02	ESM	.10444440 00
EPT	.13097834 03	ETP	.44346420 02	TEP	.46752176 01	TPS	.17561808 03	TSP	.27453512-18	STP	.43807561 01
SET	.13120920 03	STE	.48685670 02	EST	.10444440 00	RPM	.40000001 05	RPT	.40000001 05	SPN	.52296226 02
GCE	.10412016 03	GCT	.29182117 03	SIP	.17312779 03	CPT	.10037881 03	SIN	.97888523 02	D1	.13047321 01
REP	.34303269 06	VEP	.87806702 00	CPE	.93841776 02	CPS	.77963145 02	D2	.13040196 01	D3	.74070893 00

HELIOCENTRIC CONIC

EPOCH OF PERICENTER PASSAGE JULIAN DATE 2438241.51860519 JULY 31,1963 00 26 47.488

SMA	.15821838 09	ECC	.40537453-01	B	.15808734 09	SLR	.15795839 09	APO	.16463215 09	RCA	.15180462 09
VH	.27811051 02	C3	-.83881176 03	C1	.45785934 10	TFP	.78904542 06	TF	-.16063561 03	PER	.39727461 03
TA	.89794219 01	MTA	.00000000 00	EA	.86238781 01	MA	.82756085 01			TFI	.58543667 02

ALL VECTORS REFERENCED TO ECLIPTIC PLANE

X	.10916906 09	Y	-.10558783 09	Z	-.31299000 05	DX	.21090325 02	DY	.21541866 02	DZ	-.50628900-01
INC	.96660580-01	LAN	.12895441 03	APF	.17802149 03	MX	.63745462 00	MY	.71916125 00	MZ	-.16026034-02
WX	.13148218-02	WY	.10629909-02	WZ	.99999858 00	PX	.60147534 00	PY	-.79888284 00	PZ	.58372448-04
QX	.79888177 00	QY	.60147440 00	QZ	-.16897514-02	RX	.35109827-04	RY	-.46633064-04	RZ	-.99999318 00
BX	-.79888720 00	BY	-.60147849 00	BZ	.16897629-02	TX	-.79888828 00	TY	-.60147943 00	TZ	.00000000 00
DAP	.33444948-02	RAP	.30697593 03								
B.T	.15808702 09	B.R	-.26712815 06	B	.15808725 09	THA	.35990318 03				

ALL VECTORS REFERENCED TO ORBIT PLANE OF TARGET

X	-.10026543 09	Y	.11392038 09	Z	.59718550 07	DX	-.22614897 02	DY	-.19786992 02	DZ	.24285259 01
INC	.51305884 01	LAN	.10535841 03	APF	.17105040 02	MX	.62863915 00	MY	.73978544 00	MZ	-.72019558-01
WX	.86232518-01	WY	.23685074-01	WZ	.99599347 00	PX	-.53561866 00	PY	.84403563 00	PZ	.26302081-01
QX	-.84003101 00	QY	-.53574079 00	QZ	.85469486-01	RX	-.14092935-01	RY	.22207851-01	RZ	-.99964167 00
BX	.84004138 00	BY	.53574739 00	BZ	-.85470541-01	TX	.84433817 00	TY	.53581066 00	TZ	.00000000 00
DAP	.15071709 01	RAP	.12239890 03								
B.T	.15750748 09	B.R	.13516237 08	B	.15808637 09	THA	.49047217 01				

CASE 6 SPACE TRAJECTORIES 5

EARTH-MOON,3X3 SEARCH CHECK 4

SELENOCENTRIC EQUATORIAL COORDINATES

X	-.30726605 05	Y	.23181952 05	Z	.10884527 05	DX	.92738026 00	DY	-.69550490 00	DZ	-.33003404 00
R	.40000001 05	DEC	.15790050 02	RA	.14296695 03	V	.12052733 01	PTH	-.89811546 02	AZ	.23716033 03
R	.39999994 05	LAT	.18593952 01	LON	.31347464 03	VR	.12102056 01	PTR	-.84821817 02	AZR	.26834942 03
LTS	.68039355 00	LNS	.30925442 03	LTE	.64781227 01	LNE	.35771536 03				
ALT	.38262001 05	SHA	-.30553658 04	ALP	.14264317 02	DR	-.12052668 01	DP	.56685639-05	ASD	.24902844 01
HGE	.30663841 03	SVL	.58663043 00	HNG	.17565745 03	SIA	.12848806 03				

SELENOCENTRIC CONIC

EPOCH OF PERICENTER PASSAGE JULIAN DATE 2438250.98169145 AUG. 9,1963 11 33 38.142

SMA	-.40581099 04	ECC	.10006305 01	B	.14404380 03	SLR	.51192070 01	APO	.00000000 00	RCA	.25587968 01
VH	.10989293 01	C3	.12076457 01	C1	.15839192 03	TFP	-.28565231 05	TF	.66478454 02	LTF	.66477807 02
TA	-.17776894 03	MTA	.17796588 03	EA	-.17619475 03	MA	-.44320673 03	C3J	-.20681646 01	TFI	.58543667 02
ZAE	.13579189 03	ZAP	.17546069 03	ZAC	.10020881 03	DEF	.17593180 03	IR	.41384337 04	GP	.13735066 01
OP1	.36638413 02	OY	.77704536 00	OP2	-.40978346 02						

ALL VECTORS REFERENCED TO EARTH EQUATOR PLANE

X	-.30726605 05	Y	.23181952 05	Z	.10884527 05	DX	.92738026 00	DY	-.69550490 00	DZ	-.33003404 00
INC	.14390085 03	LAN	.30010683 03	APF	.33021439 03	MX	.38799358 00	MY	.75913038 00	MZ	-.52151081 00
WX	-.50881024 00	WY	-.29502833 00	WZ	-.80799872 00	PX	.78268733 00	PY	-.54955701 00	PZ	-.29220911 00
QX	-.35779825 00	QY	-.78111277 00	QZ	.51052346 00	RX	-.21914867 00	RY	.16430885 00	RZ	-.96175695 00
BX	.38558728 00	BY	.76157545 00	BZ	-.52088892 00	TX	-.59987697 00	TY	-.80009226 00	TZ	.00000000 00
SXI	.76949430 00	SYI	-.57693585 00	SZI	-.27390425 00	DAI	-.15896724 02	RAI	.32313891 03		
SXO	-.79489397 00	SYO	.52148557 00	SZO	.31014571 00	DAO	.18068011 02	RAO	.14673335 03		
ETE	.19263537 03	ETS	.28076909 01	ETC	.29694676 03						
B.T	-.12108833 03	B.R	.78014291 02	B	.14404380 03	THA	.14720729 03				

ALL VECTORS REFERENCED TO ORBIT PLANE OF TARGET

X	.28605065 05	Y	-.27939735 05	Z	-.10590010 04	DX	-.86386462 00	DY	.83998761 00	DZ	.29023897-01
INC	.13318009 03	LAN	.13709645 03	APF	.35984981 03	MX	.54211316 00	MY	.39039776 00	MZ	.69889256 00
WX	.49704667 00	WY	.53481963 00	WZ	-.68429392 00	PX	-.73371996 00	PY	.67945069 00	PZ	-.19136211-02
QX	.46395603 00	QY	.50299549 00	QZ	.73012529 00	RX	-.17186856-01	RY	.16708338-01	RZ	-.99971267 00
BX	-.48934533 00	BY	-.47827199 00	BZ	-.72924417 00	TX	.69705469 00	TY	.71701796 00	TZ	.00000000 00
SXI	-.71681194 00	SYI	.69685441 00	SZI	.23969910-01	DAI	.13735058 01	RAI	.13580882 03		
SXO	.74970565 00	SYO	-.66119286 00	SZO	.27794747-01	DAO	.15927258 01	RAO	.31858974 03		
ETE	.17858757 03	ETS	.34875988 03	ETC	.28289896 03						
B.T	-.98530293 02	B.R	.10507330 03	B	.14404380 03	THA	.13315937 03				

2 DAYS 17 HRS. 54 MIN. 37.203 SEC. JULIAN DATE 2438250.95801979 AUG. 9,1963 10 59 32.910

RECTIFICATION .82265566-02 -.10691715 03 -.63892183 02 -.13343468 02

2 DAYS 18 HRS. 21 MIN. 25.670 SEC. JULIAN DATE 2438250.97663631 AUG. 9,1963 11 26 21.378

GEOCENTRIC EQUATORIAL COORDINATES

X	.36265872 06	Y	.67528164 05	Z	-.67704695 04	DX	.18392848 01	DY	-.54619485 00	DZ	-.29017442 00
R	.36895425 06	DEC	-.10514607 01	RA	.10547854 02	V	.19404893 01	PTH	.61994179 02	AZ	.25350063 03
R	.36895424 06	LAT	-.10514607 01	LON	.24172134 03	VE	.27827691 02	PTE	.35297418 01	AZE	.26946616 03
XS	-.10940014 09	YS	.96371988 08	ZS	.41789727 08	DXS	-.20146014 02	DYS	-.19604550 02	DZS	-.85014603 01
XM	.36402911 06	YM	.66540441 05	ZM	-.71795940 04	DXM	-.18052739 00	DYM	.96599087 00	DZM	.39980764 00
XT	.36402911 06	YT	.66540441 05	ZT	-.71795940 04	DXT	-.18052739 00	DYT	.96599087 00	DZT	.39980764 00
RS	.15166519 09	VS	.29367926 02	RM	.37013020 06	VM	.10609310 01	RT	.37013020 06	VT	.10609310 01
GED	-.10586245 01	ALT	.36257605 06	LOS	.97962436 01	RAS	.13862275 03	RAM	.10358671 02	LOM	.24153216 03
DUT	.35000000 02	DT	.59999999 02	DR	.17132578 01	SHA	.29577722 06	DES	.15994156 02	DEM	-.11114622 01
DAC	.00000000 00										

CASE 6 SPACE TRAJECTORIES 6

EARTH-MOON,3X3 SEARCH CHECK 4

GEOCENTRIC CONIC

EPOCH OF PERICENTER PASSAGE JULIAN DATE 2438248.96402854 AUG. 7,1963 11 08 12.067

SMA	-.24838500 06	ECC	.14633954 01	B	.26538003 06	SLR	.28353795 06	APO	.00000000 00	RCA	.11510047 06
VH	.12667990 01	C3	.16047797 01	C1	.33618319 06	TFP	.17388931 06	TF	.18054544 02	LTF	-.26833997 01
TA	.99102434 02	MTA	.13310537 03	EA	.64289149 02	MA	.50813354 02	C3J	-.20890724 01	TFI	.66357130 02
ZAE	.12759378 03	ZAP	.74658620 02	ZAC	.71374451 02	DEF	.86210757 02	IR	.29434790 05	GP	-.44601306 01

ALL VECTORS REFERENCED TO EARTH EQUATOR PLANE

X	.36265872 06	Y	.67528164 05	Z	-.67704695 04	DX	.18392848 01	DY	-.54619485 00	DZ	-.29017442 00
INC	.16346808 03	LAN	.19409293 03	APF	.84595104 02	MX	.17039537 00	MY	-.94357501 00	MZ	-.28395686 00
WX	-.69286454-01	WY	.27598483 00	WZ	-.95866139 00	PX	-.32375024 00	PY	.90273795 00	PZ	.28328405 00
QX	.94360222 00	QY	.32999459 00	QZ	.26802632-01	RX	-.16083098 00	RY	.66433237-01	RZ	-.98474360 00
BX	.40843392 00	BY	.88458661 00	BZ	.22514054 00	TX	-.38177513 00	TY	-.92425524 00	TZ	.00000000 00
SXI	.46768996 00	SYI	.85780747 00	SZI	.21314854 00	DAI	.12306928 02	RAI	.61400095 02		
SXO	.91015444 00	SYO	-.37595062 00	SZO	-.17401143 00	DAO	-.10021136 02	RAO	.33755631 03		
ETE	.11129443 02	ETS	.13427262 02	ETC	.29118244 03						
B.T	-.26039350 06	B.R	-.51203397 05	B	.26538003 06	THA	.19112462 03				

ALL VECTORS REFERENCED TO ORBIT PLANE OF TARGET

X	-.36895203 06	Y	-.12738870 04	Z	-.13099176 03	DX	-.17164028 01	DY	.90085407 00	DZ	.89004381-01
INC	.17436470 03	LAN	.18003887 03	APF	.26073783 03	MX	.18033937 00	MY	-.97818762 00	MZ	-.96532211-01
WX	-.66638326-04	WY	.98195543-01	WZ	-.99516711 00	PX	.16161845 00	PY	-.98208291 00	PZ	-.96915314-01
QX	-.98685330 00	QY	-.16084378 00	QZ	-.15804762-01	RX	-.45510004-01	RY	.30323946-01	RZ	-.99850352 00
BX	-.55636138 00	BY	-.82692827 00	BZ	-.81557754-01	TX	.55449691 00	TY	.83218578 00	TZ	.00000000 00
SXI	-.61005897 00	SYI	-.78853059 00	SZI	-.77765366-01	DAI	-.44601306 01	RAI	.23227211 03		
SXO	-.83094044 00	SYO	.55366712 00	SZO	.54687313-01	DAO	.31349151 01	RAO	.14632393 03		
ETE	.35655698 03	ETS	.35885480 03	ETC	.27660997 03						
B.T	-.26489969 06	B.R	.15959887 05	B	.26538004 06	THA	.17655216 03				

HELIOCENTRIC ECLIPTIC COORDINATES

X	.10976280 09	Y	-.10498331 09	Z	-.32669500 05	DX	.21985299 02	DY	.20751958 02	DZ	-.48685014-01
R	.15188603 09	LAT	-.12323874-01	LON	.31627499 03	V	.30232424 02	PTH	.29280286 01	AZ	.90091757 02
XE	.10940014 09	YE	-.10504257 09	ZE	.40800000 03	DXE	.20146014 02	DYE	.21368510 02	DZE	.23901462-03
XT	.10976417 09	YT	-.10498438 09	ZT	-.32652000 05	DXT	.19965487 02	DYT	.22413822 02	DZT	-.17264962-01
LTE	.15413343-03	LOE	.31616411 03	LTT	-.12317133-01	LOT	.31627505 03	RST	.15188776 09	VST	.30016668 02
EPS	.53177688 02	ESP	.11146784 00	SEP	.12671073 03	EPM	.13247773 03	EMP	.47323826 02	MEP	.19856396 00
MPS	.17420028 03	MSP	.27453512-18	SMP	.57996467 01	SEM	.12690909 03	EMS	.52979269 02	ESM	.11146784 00
EPT	.13247773 03	ETP	.47323826 02	TEP	.19856396 00	TPS	.17420028 03	TSP	.27453512-18	STP	.57996467 01
SET	.12690909 03	STE	.52979269 02	EST	.11146784 00	RPM	.17380900 04	RPT	.17380900 04	SPN	.52187184 02
GCE	.10400432 03	GCT	.27170959 03	SIP	.84783400 02	CPT	.10175941 03	SIN	.12342529 02	D1	.29479410 04
REP	.36895425 06	VEP	.19404893 01	CPE	.93723202 02	CPS	.78005650 02	D2	.33199539 02	D3	.28520071 07

HELIOCENTRIC CONIC

EPOCH OF PERICENTER PASSAGE JULIAN DATE 2438200.81831311 JUNE 20,1963 07 38 22.253

SMA	.15921396 09	ECC	.68717996-01	B	.15883739 09	SLR	.15846213 09	APO	.17015482 09	RCA	.14827310 09
VH	.26951268 02	C3	-.83356662 03	C1	.45858883 10	TFP	.43336791 07	TF	-.11374426 04	PER	.40103022 03
TA	.50945640 02	MTA	.00000000 00	EA	.47950174 02	MA	.45026521 02			TFI	.66357130 02

ALL VECTORS REFERENCED TO ECLIPTIC PLANE

X	.10976280 09	Y	-.10498331 09	Z	-.32669500 05	DX	.21985299 02	DY	.20751958 02	DZ	-.48685014-01
INC	.92523432-01	LAN	.12862538 03	APF	.13670393 03	MX	.63377898 00	MY	.72301193 00	MZ	-.15293288-02
WX	.12623661-02	WY	.10086496-02	WZ	.99999870 00	PX	-.81427644-01	PY	-.99667893 00	PZ	.11080928-02
QX	.99667874 00	QY	-.81428944-01	QZ	-.11760417-02	RX	-.90229415-04	RY	-.11044131-02	RZ	-.99999966 00
BX	-.99667846 00	BY	.81428921-01	BZ	.11760413-02	TX	-.99667925 00	TY	.81427672-01	TZ	.00000000 00

EARTH-MOON,3X3 SEARCH CHECK 4

DAP	.63490022-01	RAP	.26532936 03				
B.T	.15883752 09	B.R	-.18679979 06	B	.15883763 09	THA	.35993262 03

ALL VECTORS REFERENCED TO ORBIT PLANE OF TARGET

X	-.91451058 08	Y	.12111790 09	Z	.60434964 07	DX	-.24889851 02	DY	-.16980480 02	DZ	.24815534 01
INC	.51341149 01	LAN	.10074622 03	APF	.33545460 03	MX	.62692186 00	MY	.74395969 00	MZ	-.67803253-01
WX	.87917978-01	WY	.16685745-01	WZ	.99598796 00	PX	.23688114 00	PY	.97082518 00	PZ	-.37174198-01
QX	-.96755048 00	QY	.23919906 00	QZ	.81400450-01	RX	-.88119743-02	RY	-.36114680-01	RZ	-.99930686 00
BX	.96755233 00	BY	-.23919952 00	BZ	-.81400605-01	TX	.97149856 00	TY	-.23704545 00	TZ	.00000000 00
DAP	-.21304145 01	RAP	.76287774 02								
B.T	.15830943 09	B.R	.12938368 08	B	.15883727 09	THA	.46723026 01				

SELENOCENTRIC EQUATORIAL COORDINATES

X	-.13703930 04	Y	.98772311 03	Z	.40912447 03	DX	.20198122 01	DY	-.15121857 01	DZ	-.68998206 00
R	.17380900 04	DEC	.13614458 02	RA	.14421748 03	V	.26158024 01	PTH	-.88042113 02	AZ	.14921151 03
R	.17380897 04	LAT	.22897611 00	LON	.31106498 03	VR	.26156829 01	PTR	-.88119889 02	AZR	.13107135 03
LTS	.69003180 00	LNS	.30528348 03	LTE	.66023724 01	LNE	.35807092 03				
ALT	.90011596-01	SHA	-.17563427 03	ALP	.58451441 01	DR	-.26142753 01	DP	.29459612-02	ASD	.89416879 02
HGE	.30682231 03	SVL	-.12329798 01	HNG	.17433242 03	SIA	.43060853 02				

SELENOCENTRIC CONIC

EPOCH OF PERICENTER PASSAGE JULIAN DATE 2438250.98196956 AUG. 9,1963 11 34 02.171

SMA	-.40731869 04	ECC	.10006041 01	B	.14160480 03	SLR	.49230130 01	APO	.00000000 00	RCA	.24607632 01
VH	.10968936 01	C3	.12031756 01	C1	.15532707 03	TFP	-.46079293 03	TF	.66485127 02	LTF	.66484504 02
TA	-.17525001 03	MTA	.17800890 03	EA	-.51160495 02	MA	-.71098199 01	C3J	-.20890724 01	TFI	.66357130 02
ZAE	.13079413 03	ZAP	.17614287 03	ZAC	.10030391 03	DEF	.17601784 03	IR	.41447607 04	GP	.13844870 01
OP1	.36822312 02	OY	.25726573 00	OP2	-.41148745 02						

ALL VECTORS REFERENCED TO EARTH EQUATOR PLANE

X	-.13703930 04	Y	.98772311 03	Z	.40912447 03	DX	.20198122 01	DY	-.15121857 01	DZ	-.68998206 00
INC	.60165945 02	LAN	.33220140 03	APF	.33950549 03	MX	-.46334101 00	MY	-.29701631 00	MZ	-.83492787 00
WX	-.40455954 00	WY	-.76736160 00	WZ	.49748961 00	PX	.74737138 00	PY	-.59092436 00	PZ	-.30371774 00
QX	.52703952 00	QY	.24893803 00	QZ	.81256827 00	RX	-.21913820 00	RY	.16664310 00	RZ	-.96135764 00
BX	-.50075264 00	BY	-.26931772 00	BZ	-.82262675 00	TX	-.60530905 00	TY	-.79599055 00	TZ	.00000000 00
SXI	.76523159 00	SYI	-.58191849 00	SZI	-.27530251 00	DAI	-.15980041 02	RAI	.32274891 03		
SXO	-.72860869 00	SYO	.59921668 00	SZO	.33176623 00	DAO	.19376013 02	RAO	.14056570 03		
ETE	.19273743 03	ETS	.44645915 00	ETC	.29677232 03						
B.T	.73278283 02	B.R	.12117018 03	B	.14160480 03	THA	.58836335 02				

ALL VECTORS REFERENCED TO ORBIT PLANE OF TARGET

X	.11781714 04	Y	-.12738409 04	Z	-.10098650 03	DX	-.17280481 01	DY	.19617211 01	DZ	.89004359-01
INC	.44920910 02	LAN	.12941984 03	APF	.35996976 03	MX	-.29684516 00	MY	-.68668679 00	MZ	.66351902 00
WX	.54548821 00	WY	.44838558 00	WZ	.70808218 00	PX	-.63470954 00	PY	.77275074 00	PZ	-.37242192-03
QX	-.54733820 00	QY	-.44922326 00	QZ	.70612098 00	RX	-.15790402-01	RY	.18287815-01	RZ	-.99970808 00
BX	.52495841 00	BY	.47580378 00	BZ	-.70571201 00	TX	.75689713 00	TY	.65353404 00	TZ	.00000000 00
SXI	-.65334326 00	SYI	.75667617 00	SZI	.24161560-01	DAI	.13844896 01	RAI	.13080858 03		
SXO	.61530938 00	SYO	-.78789216 00	SZO	.24905955-01	DAO	.14271526 01	RAO	.30798828 03		
ETE	.17880486 03	ETS	.34651396 03	ETC	.28283975 03						
B.T	.10029800 03	B.R	.99961635 02	B	.14160515 03	THA	.44903762 02				

CASE 6 SPACE TRAJECTORIES 8

EARTH-MOON,3X3 SEARCH CHECK 4

615576122471	614444730053	612417113020	202703617723	604431537501	603535320551
	630800617		455707		000000000000

EARTH-MOON,3X3 SEARCH CHECK 4

TIME ON 012075 TIME OFF 012104

MONITOR CONTROL WORDS

TRAJ	SEARCH	PARTIA	CARTES	SAVE

INDEPENDENT VARIABLES OF THE SEARCH

X	Y	Z

DEPENDENT VARIABLES OF THE SEARCH

B.T	B.R	T(F)
.10000000 03	.10000000 03	.66485000 02

615576122471	614444730053	612417113020	202703617723	604431537501	603535320551
630800617		455707	000000000000		

```
*       DATA
    230 BCD 1TRAJ
    231 BCD 1SEARCH
    235 BCD 1CARTESIAN
    237 BCD 1SAVE
   1121 DEC 0,3
    200 BCD 3X      Y      Z
    206 BCD 3B.T    B.R    T(F)
    212 DEC 100.,100.
    214 DEC 66.485
   1120 DEC 0
    232 BCD 1PARTIALS
        TRA 3,4
    RHOD+000.1,.1,.1                YDOT
    100 BCD  EARTH-MOON,3X3 SEARCH                                  CHECK 4
    110 BCD 2MOON  EARTH
    113 OCT +0
    139 BCD 1
    114 DEC 630800617,0455707
    116 DEC -.61066760E4,-.23620297E4,-.55352182E3
    119 DEC .35627328E1,-.87922522E1,-.54547869E1
        TRA 3,4
        TRA 180
EOF
```

REFERENCES

1. IBM 7094 Data Processing System, Reference Manual, A22-6703, International Business Machines, Inc., Dept. 298, P.O. Box 390, Poughkeepsie, New York.
2. Holdridge, D. B., Space Trajectory Program for the IBM 7090 Computer, Technical Report 32-223, Revision I, Jet Propulsion Laboratory, Pasadena, California, March 2, 1962.
3. Supplement to the Space Trajectories Program, Internal Document, Section 372, Jet Propulsion Laboratory, Pasadena, California.
4. Gianopulos, G. N., Generalized Powered Flight Trajectory Program for IBM 740 Computer, Technical Report No. 32-38, Jet Propulsion Laboratory, Pasadena, California.
5. Minzner, R. A., K. S. W. Champion, and H. L. Pond, The ARDC Model Atmosphere, 1959, Air Force Surveys in Geophysics Research Directorate, Air Force Cambridge Research Center, Air Research and Development Command, United States Air Force, Bedford, Mass.
6. Melbourne, W. G., Radiation Pressure Perturbations of Interplanetary Trajectories, Technical Memorandum No. 312-151, Jet Propulsion Laboratory, Pasadena, California, December 11, 1961.
7. Laxdal, A. L. and D. B. Holdridge, The JPL Trajectory System, IAS Paper given at the Mission for Nuclear Rockets Symposium, IAS 31st Annual Meeting, January 21-23, 1963, New York, Institute of the Aerospace Sciences, Inc., New York, N. Y.