45 p.

N64 12025

CODE-1

CR-55014

FINAL PROJECT REPORT

for

RESEARCH STUDY ON THE USE OF AUXILIARY ELECTRODES IN SEALED SILVER-CADMIUM CELLS

July 1962 - June 1963

Contract NAS 5-2817

Prepared by

Advanced Technology Laboratories

General Electric Company

Schenectady, N. Y.

for

GODDARD SPACE FLIGHT CENTER

Greenbelt, Md.

OTS PRICE

XEROX $ 4.60 ph

MICROFILM $ 1.55 mf.

FINAL PROJECT REPORT

for

RESEARCH STUDY ON THE USE OF AUXILIARY ELECTRODES IN SEALED SILVER-CADMIUM CELLS

July 1962 - June 1963

0 auth [1963] 0 refs

OTS:

(NASA Contract NAS 5-2817)

(NASA CR

Prepared by

3 Advanced Technology Laboratories
1 General Electric Company
2 Schenectady, N.Y.

3540002

for

GODDARD SPACE FLIGHT CENTER
Greenbelt, Md.

SUMMARY

12025

This report describes the work done on the use of auxiliary electrodes to increase the rate of recombination of the oxygen generated in sealed silver cadmium cells during charging. In the study, small test cells incorporating an auxiliary electrode were cycled at various rates and were continuously charged at various rates, with limited tests at -10°C and 40°C being made. The results show that the addition of an auxiliary electrode to standard silver-cadmium cells is feasible, and that such cells give essentially zero pressure rise in cyclic and continuous charging. The use of auxiliary electrodes requires a small increase in the weight of the cell, and a somewhat greater increase in cell volume; the amount of the increases depends principally upon the area of auxiliary electrode needed. This area in turn is proportional to the maximum charging current to be used. The use of the auxiliary electrode does not change the electrical characteristics of the silver-cadmium cells, nor does it interfere in the use of the cells in batteries. It is recommended that additional work be done on the long term testing of cells with auxiliary electrodes and on the design of cells with auxiliary electrodes. The extension of the auxiliary electrode study to silver-zinc cells is recommended as a follow-on to this project.

AUTHOR

TABLE OF CONTENTS

		Page
1.0	INTRODUCTION	1
2.0	TECHNICAL BACKGROUND	3
3.0	EXPERIMENTAL	7
	3.1 Test Cells	7
	3.2 Test Equipment	9
	3.3 1.25 AH Cell Tests	15
	3.4 5 AH Cell Tests	16
	3.5 Auxiliary Electrode Characteristics	20
	3.6 Delivery of Test Cells	20
4.0	DISCUSSION	23
5.0	CONCLUSIONS AND RECOMMENDATIONS	25
6.0	BIBLIOGRAPHY	26
	APPENDICES	
	I Master Clock	I-1
	II Cycle Controller	II-1
	III Constant Current Sources	III-1

LIST OF ILLUSTRATIONS

Figure	Title	Page
1	Basic Auxiliary Electrode System	6
2	Schematic Test Cell Design	8
3	1.25 AH Test Cells	10
4	5 AH Test Cell	11
5	Block Diagram of Cycle Test System	12
6	Block Diagram of Continuous Charge Test Equipment . .	14
7	5 AH Cell Performance	19
8	Auxiliary Electrode Pressure Response Characteristic . . .	21
9	Auxiliary Electrode Load Curves	22
I -1	Master Clock Control and Plugboard Panel Circuit	I-3
I -2	Master Clock Relay Panel Circuit	I-4
II- 1	Cycle Controller Circuit	II-4
II- 2	Stepping Switch Reset Circuit	II-5
III- 1	Low Range Constant Current Source Circuit	III-2
III- 2	Medium Range Constant Current Source Circuit	III-3

LIST OF TABLES

Table	Title	
I	Summary of 1.25 AH Continuous Charge Tests	17

1.0 INTRODUCTION

This report describes the work done on the study of the use of an auxiliary electrode in sealed silver-cadmium cells for the control of internal cell pressure during charging. The auxiliary electrode functions by promoting the recombination of oxygen generated during charging; the more rapid recombination rate produced by use of the electrode reduces the pressure developed in the cell. It is possible to design sealed cells with auxiliary electrodes that show negative pressures even when charged at rates greatly exceeding the maximum charging rates recommended by the manufacturer for unsealed cells.

There are two basic design approaches for using auxiliary electrodes in sealed cells: one is to use the auxiliary electrode for recombining the gas generated during charging, the auxiliary electrode being designed to carry all of the charging current so that gas pressure does not build up beyond a low limit; the other is to use the auxiliary electrode to recombine the gas generated in the charging, but to use the electrical current or voltage created by the electrode reaction to control the charging. The latter use is proprietary to the General Electric Company and has not been used in the silver-cadmium cell work given in this report. Only the first type of auxiliary electrode usage was studied, since it fits closely into the intended usage of silver-cadmium cells in space vehicles.

The use of an auxiliary electrode to control gas pressure in a cell is not new, although the particular application to silver-cadmium cells has not been described previously. Edison proposed use of a heated platinum or platinum-oxide coated wire to catalyze recombination of hydrogen and oxygen in galvanic cells in 1912 (1) which made possible the first sealed secondary cell. Later Davis (2) and Craig (3) patented means for recombining gases by use of catalysts. Dassler (4) appears to be the first to use auxiliary electrodes for control of gas pressure by electrochemical recombination in the cell; his electrodes are internally connected in the cell. Tichenor (5) used a complex control system by which hydrogen and oxygen, as appropriate, are generated by electrolysis of the electrolyte using an auxiliary electrode. The kind and amount of gas generated at the auxiliary electrode is regulated so that nearly stoichiometric amounts of hydrogen and oxygen are generated during charging; the gases were recombined by a hot wire or catalyst. Bonner, et. al. (6) used an extra negative electrode arranged so that it alone sees the oxygen generated upon charging, this extra or auxiliary negative electrode then assumes the burden of carrying the overcharging current. Mandell (7) proposed use of catalytic sponge type electrodes, connected electrically to the negative electrode. Ruetschi (8) proposed use of porous carbon electrode activated with silver as an auxiliary electrode; in a later patent (9) he uses auxiliary electrodes whose potential with regard to the main plates are maintained at fixed potentials by means of diodes.

The auxiliary electrode used in the studies is an oxygen electrode employing a catalyst composed in part of platinum. The construction and catalyst composition are proprietary to the General Electric Company. Alternate electrode materials are known, but have not been investigated for use in silver-cadmium cells. Non-magnetic construction of the electrode is possible.

2.0 TECHNICAL BACKGROUND

In present sealed silver-cadmium cells, the cell reactions on charge, discharge, and overcharge are:

At positive electrode:

1. $2Ag + 2OH^- \underset{\text{discharge}}{\overset{\text{charge}}{\rightleftharpoons}} Ag_2O + H_2O + 2e$

2. $Ag_2O + 2OH^- \underset{\text{discharge}}{\overset{\text{charge}}{\rightleftharpoons}} 2AgO + H_2O + 2e$

3. $4OH^- \xrightarrow{\text{overcharge}} O_2 + 2H_2O + 4e$

At negative electrode:

4. $Cd(OH)_2 + 2e \underset{\text{discharge}}{\overset{\text{charge}}{\rightleftharpoons}} Cd + 2OH^-$

5. $2H_2O + 2e \xrightarrow{\text{overcharge}} H_2 + 2OH^-$

Advantage is taken in the sealed cell design of the ability of the cadmium electrode to recombine any oxygen present by the electrochemical reactions occurring on the electrode:

6. $O_2 + 2H_2O + 4e \longrightarrow 4OH^-$ (at cathodic sites)

7. $2Cd + 4OH^- \longleftarrow 2Cd(OH)_2 + 4e$ (at anodic sites)

To implement this recombination, the sealed cell design calls for the use of a large excess of cadmium electrode capacity so that reaction (5), evolution of hydrogen, does not occur. This makes the positive electrode limiting in the charging, and the overcharge reaction evolving gas is the evolution of oxygen rather than hydrogen or mixtures of hydrogen and oxygen. During the charging, the recombination of oxygen is largely by reaction (6); in the absence of charging current the recombination reaction proceeds by coupling reactions (6) and (7). Because of various design limitations, and the limited area of the cathodic sites on the electrode, the rate of reaction (6) is normally very low. The rate of reaction is dependent upon the oxygen

pressure, the cell temperature, the area of cathodic sites exposed to the oxygen, and the specific catalytic properties of the cathodic sites for oxygen reduction. Upon charging, the oxygen pressure increases until the oxygen recombination rate equals the generation rate; the pressure rise is quite large even for low charging rates. Reactions (6) and (7) continue as long as there is oxygen present, and thus reduce the pressure in the cell to low values after discontinuing charging.

The auxiliary electrode is introduced into the cell to promote reaction (6). The construction of the auxiliary electrode follows closely the construction of the oxygen electrode used in fuel cells, since the function of the two is the same: i.e., the cathodic reaction of oxygen with water to produce hydroxyl ions at usable voltages and current densities.

The auxiliary electrode can be used in several ways, but all are based on the flow of current from this electrode through some type of external circuit to the cadmium electrode. The over-all reaction is equivalent to the recombination reaction [reactions (6) and (7)]. The difference lies in the separation of functions, the auxiliary electrode is expressly designed and situated in the cell to give the maximum rate for reaction (6), the cadmium electrode is relegated to its basic negative electrode function for which it has been expressly designed.

A bonus in the use of a separate auxiliary electrode is that part of the energy on overcharging can be dissipated externally to the cell in the circuit impedance placed between the auxiliary and cadmium electrode. A second bonus is that the auxiliary electrode may use catalysts that promote the direct recombination of small amounts of hydrogen in the presence of oxygen; this prevents the build-up of this gas that is sometimes generated during unusual operation of the cell.

The result of the improved rate of recombination and the removal of hydrogen during cell operation is that the cell pressures generally can be kept below one atmosphere, and thus permit use of lightweight plastic cases. The electrode lead seals are not subjected to high pressure differentials and operate under conditions that give more reliable sealing action. Also, although the cell is still designed with an excess cadmium oxide capacity to promote preferential oxygen evolution, the amount of the excess can be cut drastically with complete safety, since evolution of small amounts of hydrogen is no longer detrimental to cell life. Note that the basic scheme of using a gas electrode to promote the recombination of gas formed in the operation of the cell can be based on hydrogen in place of oxygen; in this case the auxiliary electrode would be connected to the positive electrode, and the cell designed to have an excess of positive electrode material rather than negative material.

The upper half of Figure 1 shows the basic auxiliary electrode circuit. In this circuit, the generation of oxygen at the silver electrode causes the voltage of the auxiliary electrode to rise, and a current to flow in the power dissipating resistor. Because the auxiliary electrode can be sized to suit the requirements imposed on the charging, it offers a simple, effective means for the design of cells to withstand much larger charging currents than the conventional sealed cell design. In our preliminary tests (on nickel-cadmium cells) rates as high as 1C [1] could be used to charge a test cell continuously with only a few pounds pressure rise in the cell. With the auxiliary electrode disconnected, charging at the C/10 rate in the same cell gave equilibrium pressures on continuous overcharge of over 100 PSI. The overcharge rate that can be withstood is a function of the auxiliary electrode size, and the location of the electrode with respect to the other electrodes.

The lower half of Figure 1 shows the curves for overcharging a small (1.25 AH) silver-cadmium cell at various rates. The pressure rise for the cell with the auxiliary electrode not connected is not linear because the cathodic areas of the cadmium electrode are not saturated for the oxygen reaction at charging rates below about 0.08C. Charging at rates above this value increases the cell pressure rapidly, since the increase in recombination rate with increase in pressure is small.

(1) C is the rate of charge that would equal the ampere-hour capacity of the cell in a one-hour discharge.

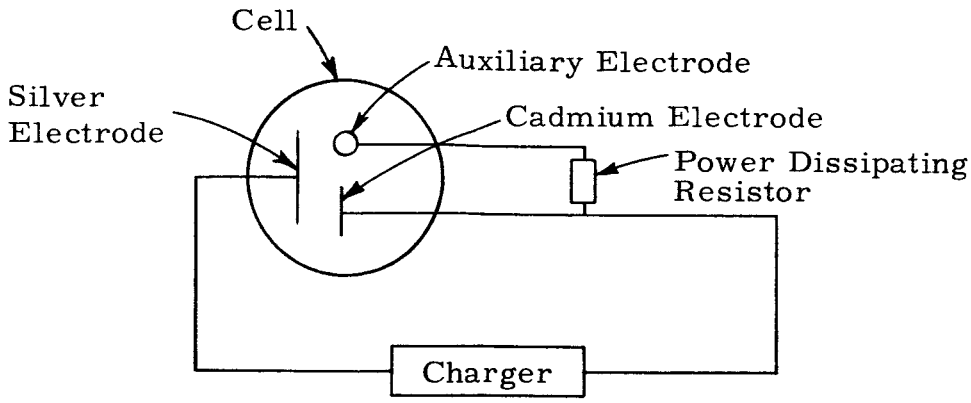

Basic Circuit

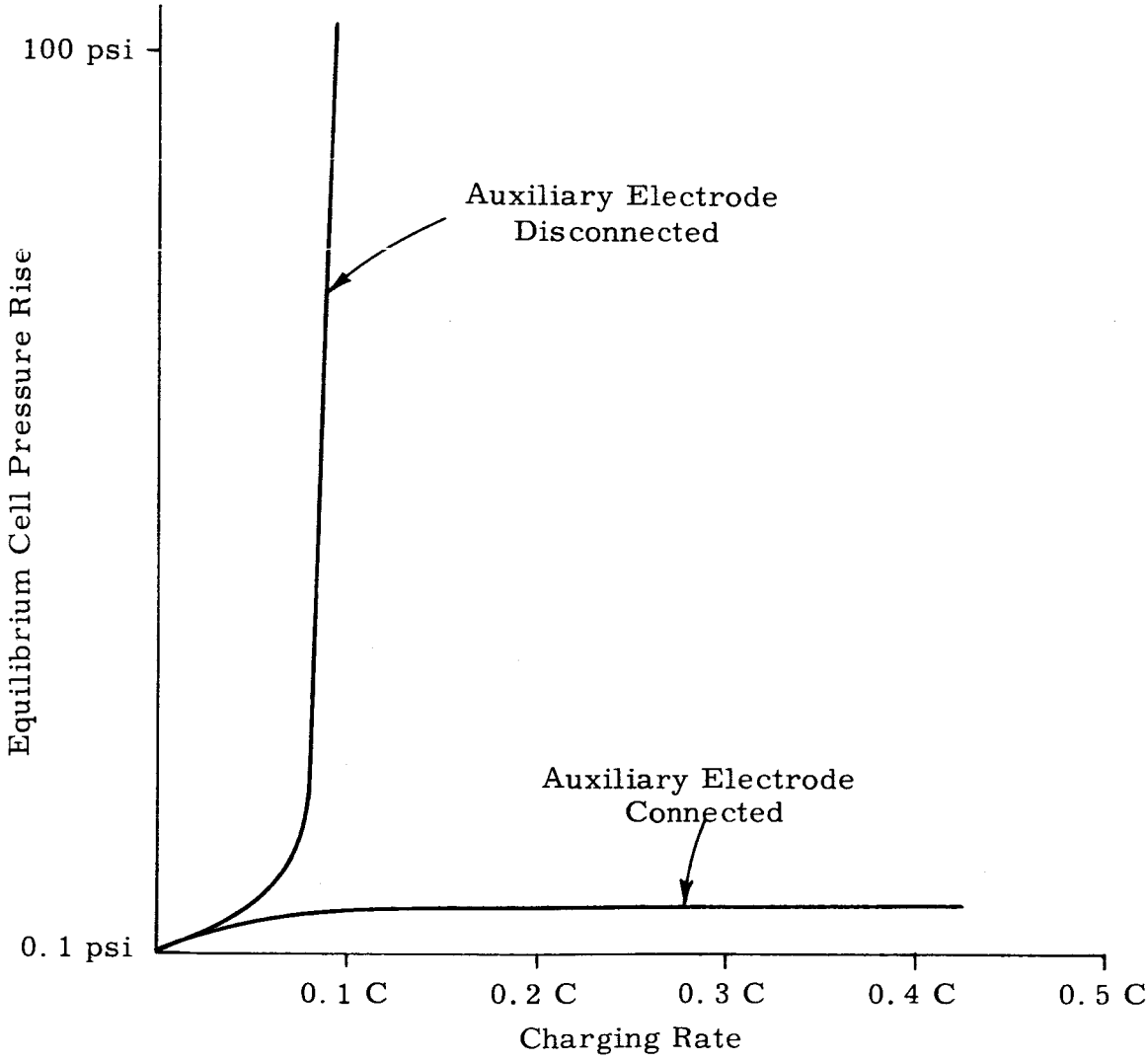

Cell Pressure Behavior

Figure 1. Basic Auxiliary Electrode System.

3.0 EXPERIMENTAL

3.1 Test Cells

Two sizes of cells were used in the work:

1) 1.25 AH cells with and without a reference electrode, and
2) 5 AH cells without a reference electrode.

Figure 2 shows the schematic of the design without the reference electrode. The following gives a description of the cell components.

Ag-Cd Cell Electrodes - The 1.25 AH cells used one silver and two cadmium electrodes taken from Yardney YS-5 cells. The 5 AH cell used the YS-5 cell electrode pack, consisting of 4 silver and 5 cadmium electrodes.

Auxiliary Electrode - The material used in the investigation was obtained from the fuel cell group at the Advanced Technology Laboratories of General Electric. It consists of a nickel wire mesh coated with a thin layer of electrode catalyst, electron carrier and binder. This material was cut into pieces of the dimensions of the Yardney YS-5 electrode, and a pure nickel lead welded to the nickel screen. The area of the auxiliary electrode is 1/2 the cathode area for the 1.25 AH cells, and 1/8 the cathode area for the 5 AH cells. This area is computed on the basis that the auxiliary electrode is limited to use on one side only, while the cathodes are used on both sides in the cell. The auxiliary electrode can be fabricated to be non-magnetic by using a silver mesh in place of the nickel wire mesh presently used. The catalyst and carrier components are not magnetic.

Reference Electrode - This was made from SAFT VO positive plate material cut to 1 cm x 4 cm. A nickel wire lead was welded on and the electrode charged at a C/10 rate for 15 hours. It was then allowed to stand for 48 hours in the electrolyte in order to lose the "peroxide" capacity and then discharged for about 20% of the remaining capacity. This gives an electrode whose potential is stable for 10-12 months, provided it is not subjected to any substantial current drain. When used, the electrode was placed at right angles to the main electrode pack, at the edges of the electrodes.

Battery Case - The inner and outer cases for the 1.25 AH cells were made by cementing 1/8" Lucite sheets together. The outer case for the 5 AH units was similarly made. The 5 AH inner case was largely the original molded Yardney case. The face of the case was cut out to insert the auxiliary electrode, and a 1/8" Lucite cover cemented on. The Yardney case thickness was sufficient to provide space for the auxiliary electrode and the gas space required.

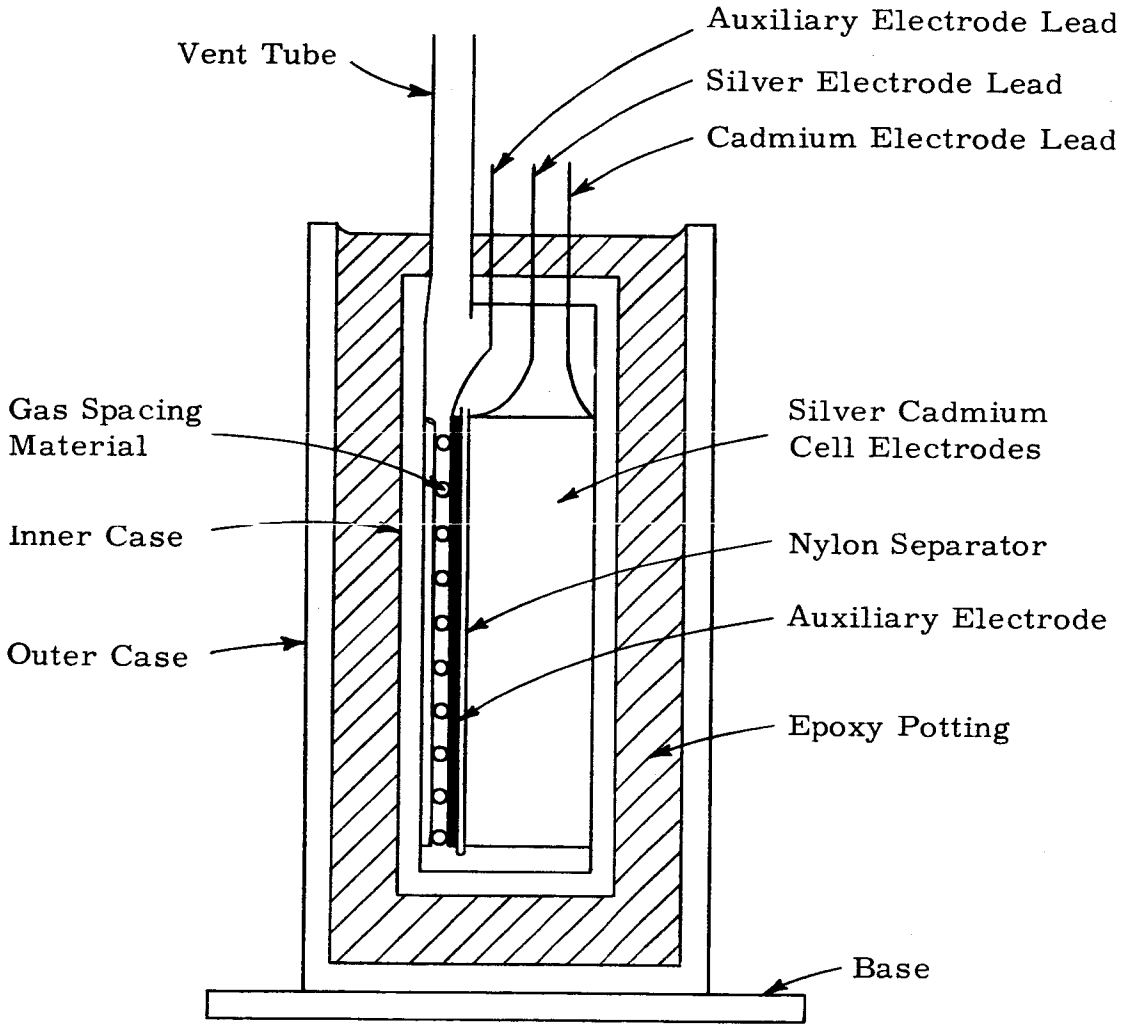

Figure 2. Schematic Test Cell Design.

Potting - The cells were potted using an epoxy resin. Prior to potting, the leads and terminals were soldered in place, and the vent tube cemented in place. The resin used was Araldite 6005, 100 parts, and diethylaminopropylamine, 5 parts. These were mixed, and the mixture degassed by subjecting the batch to a rough vacuum. The resin cures with a low exotherm in 24 hours. The clearness of the potting is shown in Figures 3 and 4.

Gas Spacing Material - This was Vexar Plastic Netting (Vexar Division, E. I. Du Pont de Nemours; Buffalo, New York) diamond pattern, 4/4-30-90-PE3, high density polyethylene.

Ag-Cd Separator - Material used was supplied by Yardney. In 1.25 AH cells, the silver electrodes were wrapped as found in the cells; in 5 AH cells, the electrode pack was used as received without change.

Nylon Separator - This was Pellon 2505W unwoven cloth.

The potted units were checked for leaks and electrical shorts, and then filled to the top of the electrodes with 31% potassium hydroxide electrolyte and soaked 24-48 hours. The cells were then formed by charging at 75 ma (1.25 AH cell) or 300 ma (5 AH cell) for 32 hours, and discharging at 60 ma and 250 ma respectively until the cell voltage became zero. The second and third formations were made at 75 and 300 ma charging for 24 hours, followed by discharge at 60 and 250 ma to 0.6 volt. After charging at C/10 for 15 hours, the cell electrolyte was adjusted to give a residual free electrolyte layer 1/8" deep on the bottom of the cell. This was probably too low for best operation of the cell.

Figure 3 shows a completed 1.25 AH test cell with reference electrode. The cell to the left shows the silver-cadmium electrode pack through the potting; the one to the right shows the auxiliary electrode with a Lucite spacer in the center.

Figure 4 shows a 5 AH test cell with the associated plumbing used in the tests. The 1/8" piping is connected to the 1/4" vent tube of the cell by a Swagelok adapter. The pressure gauge is a Marshalltown Bourden tube gauge of 0-100 psi range; the other large object is the pressure transducer. This latter is an International Rectifier Co. "Computran" Cat. No. 70-2137N, with a range of -30 to +50" mercury, and a 1000 ohm slide wire. This type of transducer uses a pressure capsule to move a slider on the slide wire; the change in resistance is followed electrically. All pipe joints were sealed with G. E. Glyptal paint to make them vacuum tight.

3.2 Test Equipment

Figure 5 shows the block diagram of the test equipment used in cycling the cells. Each test cell has 5 leads: negative and positive power leads,

Figure 3. 1.25 AH Test Cells.

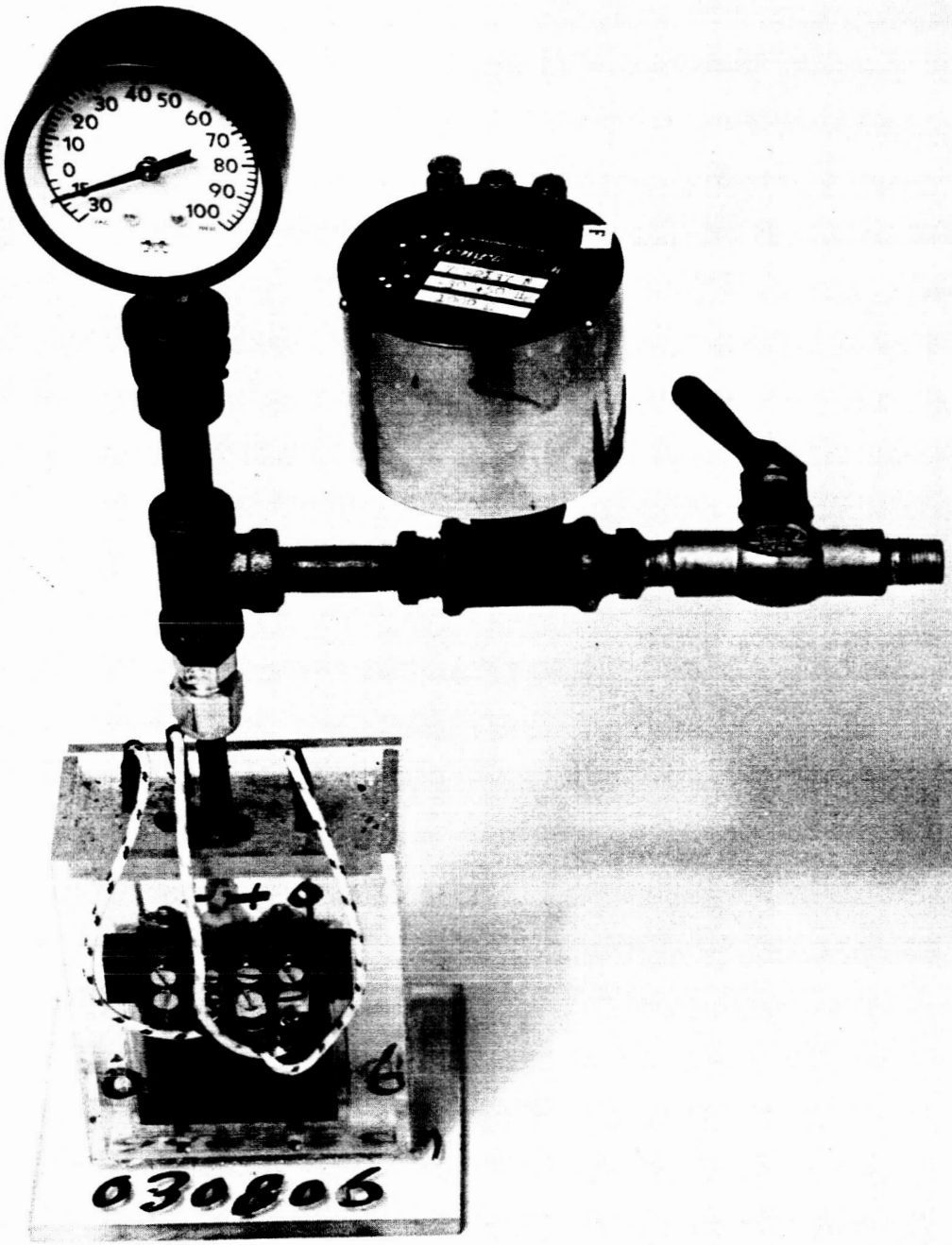

Figure 4. 5 AH Test Cell.

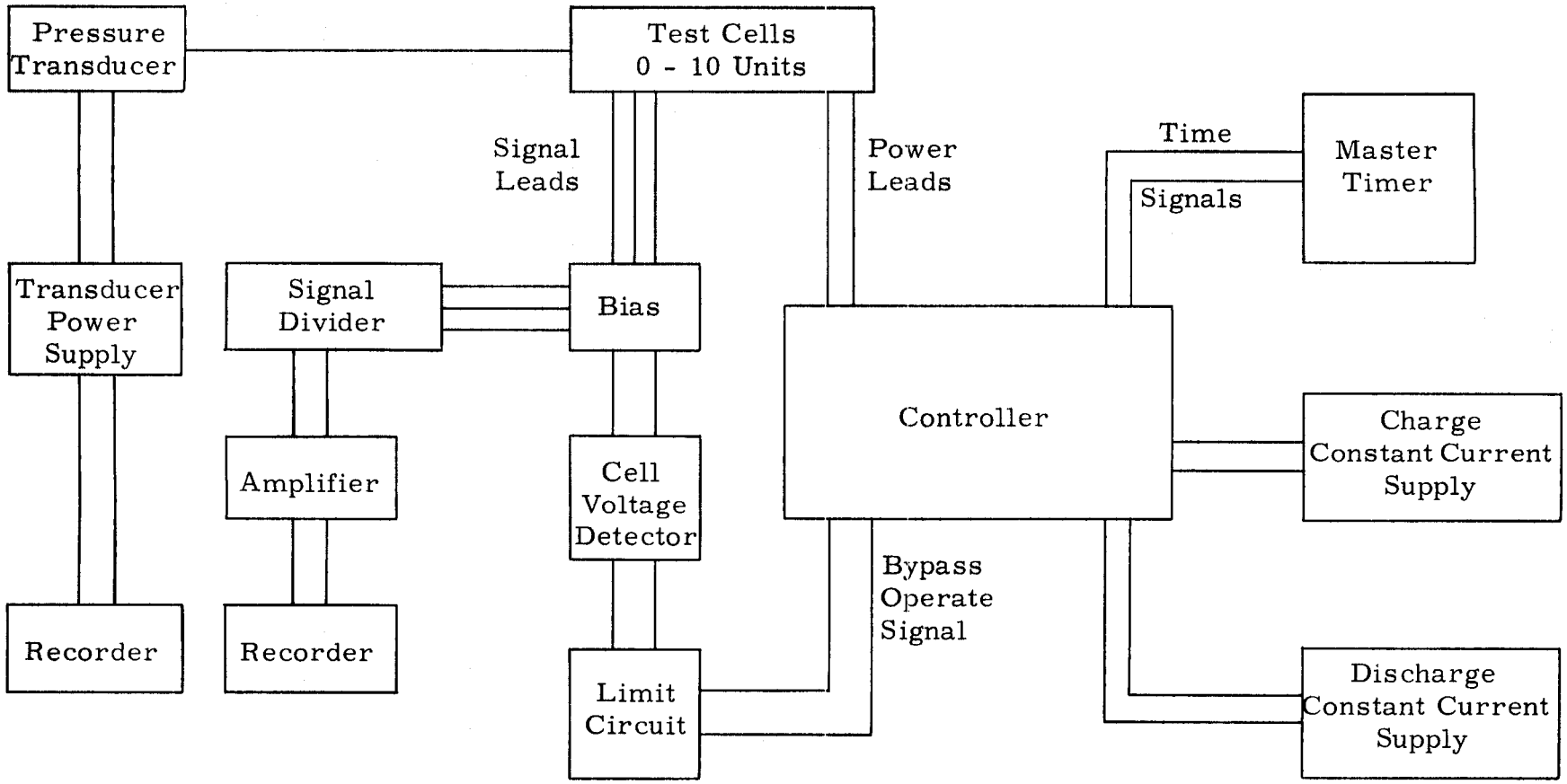

Figure 5. Block Diagram of Cycling Test Equipment.

negative, positive, and reference signal leads. The power leads are connected to the charge and discharge current sources through a control circuit. This control circuit governs the charge and discharge of the cells in accordance with time signals from the master clock, and also in accordance with whether the cell voltage is above or below a preset limit. The input for the latter control is from the cell voltage detector and limit circuit; the limit circuit activates a by-pass circuit in the controller when the cell voltage exceeds the limit; the by-pass circuit removes the test cell from the current path and by-passes the current so that other cells can continue to charge or discharge.

The signal divider is a relay switch that alternates the input to the amplifier between reference vs. cadmium, and reference vs. silver electrode for each test cell. The bias is used to offset the reference electrode voltage so that the difference in the recorded curves represents the cell voltage. An amplifier is used to keep the drain on the reference electrode to a minimum. Recorders used were Rustrak 0-1 ma recorders, with a Rustrak #98 DC amplifier. A chart speed of 1"/hr. was used. Appropriate shunts and series resistors were used for the input circuits. All electrical measuring equipment was checked using precision meters, resistances, voltage and current sources.

The detailed circuits for the master clock are given in Appendix I; the circuits and operation of the cycle control and other test circuits are given in Appendix II. The complete test circuit shown in Figure 5 was used when the cells with reference electrodes were tested; the signal divider and bias portions were disconnected and by-passed when testing cells without reference electrodes.

The constant current sources used with the test equipment varied according to the current:

RANGE	
0-20 ma	Low Range Constant Current Source, See Appendix III.
0-100 ma	Medium Range Constant Current Source, See Appendix III.
0-1.0 amperes	Harrison Laboratories, Model 881A.

During the cycling, pressures were recorded. A pressure transducer on each cell was used as the input. The pressure transducer circuit used was the one recommended by IRC in their brochure; this is a battery powered circuit that is adjusted to give full scale voltage deflection for minimum pressure, the voltage decreasing with increasing pressure. The output was recorded on a Rustrak 1 ma recorder.

Figure 6 shows a typical overcharge test circuit. The number of cells and recording elements varied with the test.

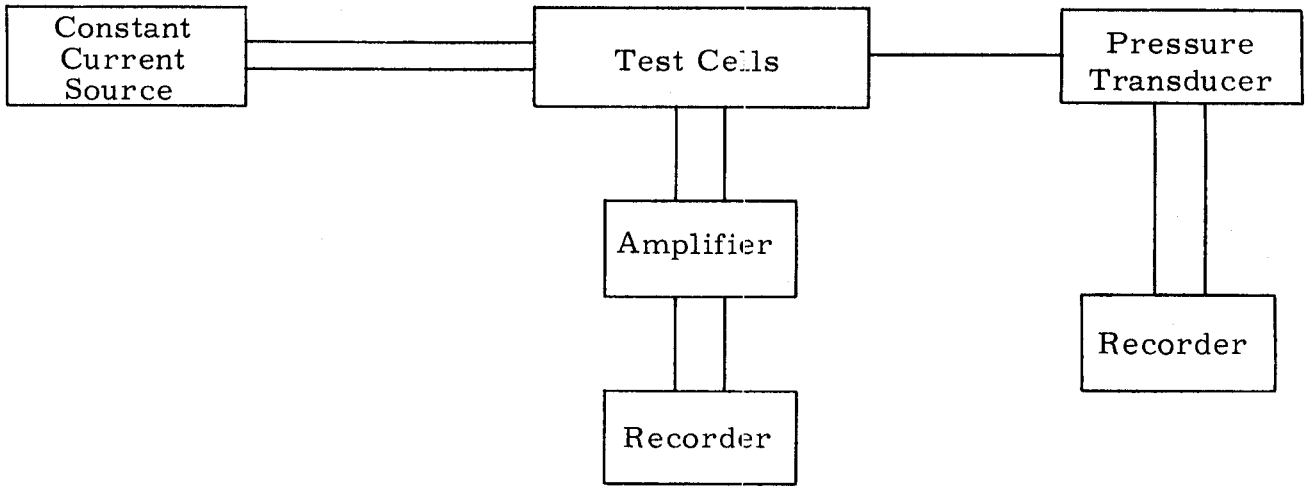

Figure 6. Block Diagram of Continuous Charge Test Equipment.

Most of the preliminary tests were made at room temperature; however, some tests were made at -10°C using a Tenney "Tenney-mite" controlled temperature box Cat. #TMUF-100240. This box could be set at any temperature from -100°F to 240°F, and was automatically controlled. Other tests were made at 40°C using a Cenco "Lab-Line" air circulating oven.

Gas analyses were made using a Fisher Gas Partitioner, Model 25V. To increase the sensitivity to hydrogen, argon instead of helium was used as the sweep gas. Standard samples of hydrogen and air were made by mixing the gases by volume in calibrated glass burets at constant pressure; these were used to calibrate the instrument response. In the analyses, less than 0.1% by volume of hydrogen could be detected and measured. Output of the partitioner was recorded on a Leeds and Northrup Model H recorder with a chart speed of 2"/minute. This gave adequate resolution of the gas peaks. Sampling of the gas was made by connecting the partitioner sample tube to the outlet side of the toggle valve on the cell plumbing with pressure-vacuum rubber tubing, evacuating with a mechanical vacuum pump, sealing off the evacuated line, and releasing the gas from the cell into the sampling line. The gas in the sampling tube was then inserted into the partitioner gas stream using the slide valve of the partitioner. No corrections were made for pressure, as only the relative amounts of gases were of concern.

3.3 1.25 AH Cell Tests

A total of 33 test cells were constructed. The initial group of eleven were found faulty in design and construction, and were used primarily for testing out the cycling control system and to make some preliminary tests on the auxiliary electrode. Of the remaining 22, three failed by developing internal shorts or irreparable leaks during the formation of the silver and cadmium electrodes. The reference electrode was used in some of the cells in the early tests. The electrode was used in cycling to check on the behavior of the cell electrodes. It was found during these tests that the charged cadmium electrode was a reliable reference electrode, and gave satisfactory comparisons between runs. The use of the reference electrode was discontinued early in the test program.

In cycling tests with the remaining 19 1.25 AH cells, using a cycle of 11-hour charge, 1/2-hour rest, 12-hour discharge, 1/2-hour rest; the charging was halted when the cell reached 1.9 volts, the discharge at 0.9 volts. Three cycles were used: (1) 75 ma charge, 65 ma discharge; (2) 100 ma charge, 75-80 ma discharge, and (3) 250 ma charge, 200 ma discharge. In all three cycling tests at room temperatures with the auxiliary electrode connected to the cadmium electrode through a low resistance, the pressure rise in cells operating within normal voltage limits was usually less than 1 PSI. The single exception was one cell charged at 250 ma whose pressure rise was 5 PSI.

Several cells were cycled at -8°C and 40°C with the auxiliary electrode connected. The low temperature cells at 250 ma charge developed 5-10 PSI rises, which fell to zero on discharge. The other tests all gave pressure rises of less than 1 PSI.

In all cycling tests, with the auxiliary electrode disconnected, pressure rises of 20 to over 50 PSI were obtained at end of charging, the amount of the rise being related to the rate of charge.

During the cycling tests, several cells failed by developing leaks, and one cell was ruined by a failure of a control relay. The relay failure subjected the cell to successive over discharges without intervening charges. This cell blew up from the gas pressure developed on the over discharge.

On continuous charging tests, the results given in Table I were obtained. Not all cells were tested, nor any one cell tested for all values. The auxiliary electrode was connected to the cadmium electrode with a 100 ohm resistor for the 2 and 5 ma currents, a 5 ohm resistor for the 50 and 100 ma tests and 2 ohm for the 250 ma tests. These resistor values were selected to give an operating voltage for the auxiliary electrode of about 0.3 to 0.5 volt above cadmium.

Several cells failed on the 250 ma test, the failures being the formation of a high internal resistance which was traced to development of dry areas that did not rewet with the electrolyte even upon immersion in electrolyte for 48 hours. No cell operating within the normal charging voltage of less than 1.7 volts contained hydrogen in the gas samples taken during the tests with the auxiliary electrode disconnected. Two cells with dried out separator had hydrogen present in the gas sample in similar samples; the hydrogen was 100% of the gas sample, i.e. no oxygen was found with the hydrogen.

In the cycling and continuous charge tests, about 8 cells failed due to formation of internal shorts which were found to be due to sludging of the cadmium electrode. One of these cells was cleaned up and repotted, and gave good service for two months, the test being stopped when all of the 1.25 AH cells were removed from test.

The results of the cycling and continuous charge tests on 1.25 AH cells show conclusively that the use of an auxiliary electrode for control of gas pressure in the cell is feasible.

3.4 5 AH Cell Tests

A total of 13 cells were constructed. Of these, one failed within a short time due to development of high internal resistance, which was traced to development of dry areas on the cell separators. Of the remaining 12 cells, four were cycled 27 days at 250 ma charge for 12 hours, rest 1/2 hour,

TABLE I

SUMMARY OF 1.25 AH CELL CONTINUOUS CHARGE TESTS (1)

Current ma	Equilibrium Pressure Rise, PSI with Auxiliary Electrode (2)			Equilibrium Pressure Rise, PSI without Auxiliary Electrode (2)		
	- 8°C	25°C	40°C	- 8°C	25°C	40°C
2	-	0	-	-	15	-
5	-	0	-	-	40	-
50	0	0	0	> 50	> 50	> 50
100	0	0	0	> 50	> 50	> 50
250	> 50	15	< 5 (3)	> 50	> 50	> 50

(1) Data taken from a number of cells.

(2) Test discontinued at end of seven days of constant pressure, or whenever pressure rise exceeded 50 PSI.

(3) Initial slow rise to 5 PSI then show decrease to 1 - 2 PSI. All other tests show gradual rise to pressure given.

with 1 ohm resistance connected between the auxiliary and the cadmium electrode; no pressure rise was noted in the cycling. These four cells, plus four new cells, were then cycled 22 days at 500 ma charge for 12 hours, 1/2 hour rest, discharge at 500 ma for 11 hours, 1/2 hour rest, with 1 ohm resistance connected between the auxiliary and the cadmium electrode. The pressure rose 7-8 PSI during early part of charge, then fell to less than 1 PSI. A few of the gas analyses showed presence of hydrogen present. The eight cells were then cycled 5 days at 1 ampere charge for 5 1/2 hours, rest 1/2 hour, discharge 1 ampere for 5 1/2 hours, rest 1/2 hour. All cells showed slow but continuous pressure rise throughout the test, even with the auxiliary electrode directly shorted to the cadmium electrode. The auxiliary current never exceeded 650 ma during the charging, and it was obvious that the auxiliary electrode was too small for this charge rate. The eight cells were returned to the 500 ma cycle; during this time two developed internal shorts between the cadmium and silver electrodes which were broken by shaking the cell. The inference is dendrite formation. One cell developed a high resistance which was not identified. The remaining 7 cells, including the two which recovered by shaking, were cycled an additional total of 25 days at the 500 ma regime before conclusion of the work. The pressure rise in the cells was limited to 7-8 PSI with hydrogen detected several times; the pressure always dropped to zero during discharge. In cells with hydrogen present, oxygen was always absent.

Two of the four cells not cycled were placed under continuous charge of 250 ma for 20 days; no pressure rise detected with auxiliary electrode connected to the cadmium electrode through 1 ohm. At the end of this test, these cells plus the remaining two cells were placed on continuous overcharge of 500 ma for 20-22 days. One of the cells was at 40°C, two at -10°C, and the other at room temperature. One of the two at -10°C gave continual pressure rise, even with auxiliary electrode shorted directly to the cadmium lead; hydrogen was detected. The other cell at -10°C behaved well with a pressure rise of 10-12 PSI. The other two cells gave only 6-8 PSI pressure rise. All cells were placed on 1 ampere overcharge for 5 days, but pressure in all cells rose continuously with auxiliary electrode shorted the cadmium electrode. The cells were returned to the 500 ma overcharge for the remainder of the program. Three of these cells failed, one by temporary shorting between the cadmium and silver electrode which was broken by shaking, one by shorting due to sludge formation at the bottom of the cell, and the last by formation of dry spots on the cell separators.

Figure 7 shows the response for one of the room temperature cells continuously charged at 500 ma (C/10). The cell pressure rise was stable at 7.5 PSI ± 0.2 PSI for the test period of 20 days. The cell voltage of 1.55 volts has not been corrected for IR drop in the leads. The auxiliary electrode current was 500 ± 50 ma at steady-state with some of the fluctuation due to bubble formation in the electrolyte.

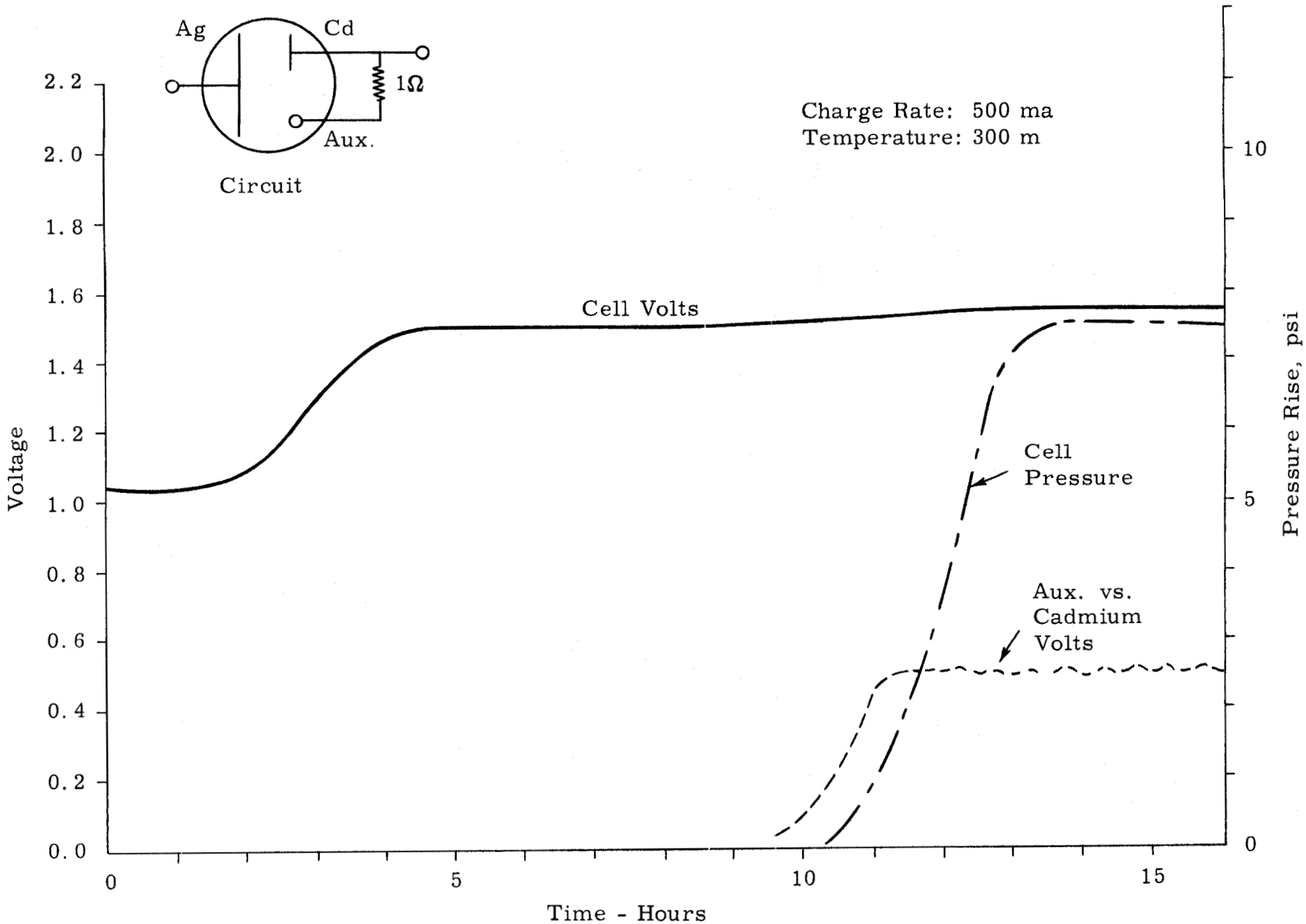

Figure 7. 5 AH Cell Performance.

In summary, the test results from the 1.25 AH cell tests were confirmed in the 5 AH cell tests. The auxiliary electrode gave good performance at the C/20 and C/10 rates, but failed at the C/5 rate. This is due to the limited size of the auxiliary electrode; no evidence was shown for auxiliary electrode failure other than small size.

3.5 Auxiliary Electrode Characteristics

The characterization of the auxiliary electrode presented here was done in work on nickel-cadmium cells, and not as part of the program on silver-cadmium cells. The results are reported here for informative purposes. Figure 8 shows the open circuit voltage of the auxiliary electrode (cadmium = 0) for various oxygen pressures. The highly non-linear response is useful in that the high voltages at low pressures make possible the use of smaller auxiliary electrodes. The performance curves for the auxiliary electrode under load at various oxygen pressures are shown in Figure 9. At present, the performance varies considerably from lot to lot of electrodes; the figure shows average values. These two figures give the designer the necessary information on what area of auxiliary electrode is needed for any application, and pressure response.

3.6 Delivery of Test Cells

A number of Yardney cells were modified by insertion of auxiliary electrodes for use by Goddard Space Flight Center during the contract period. The design used followed closely that of the 5 AH test cells, but no cells were potted. After modification, the cells were formed and tested for one cycle at C/10 charge rates before shipment. The cells were:

1.	32	YS	-	5 cells
2.	6	YS	-	12 cells
3.	6	YS	-	115 cells
4.	1	YS	-	150 cells

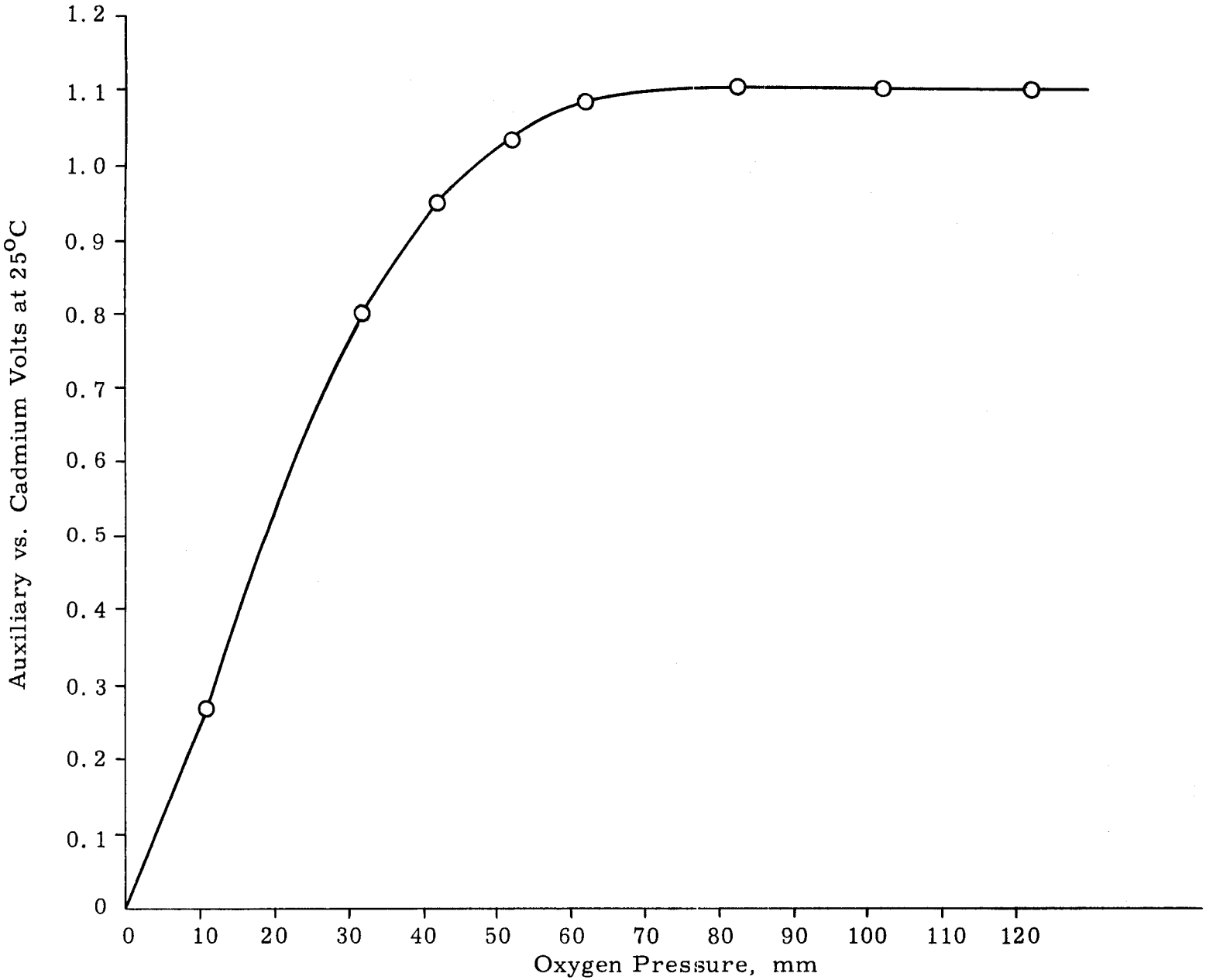

Figure 8. Auxiliary Electrode Pressure Response Characteristic.

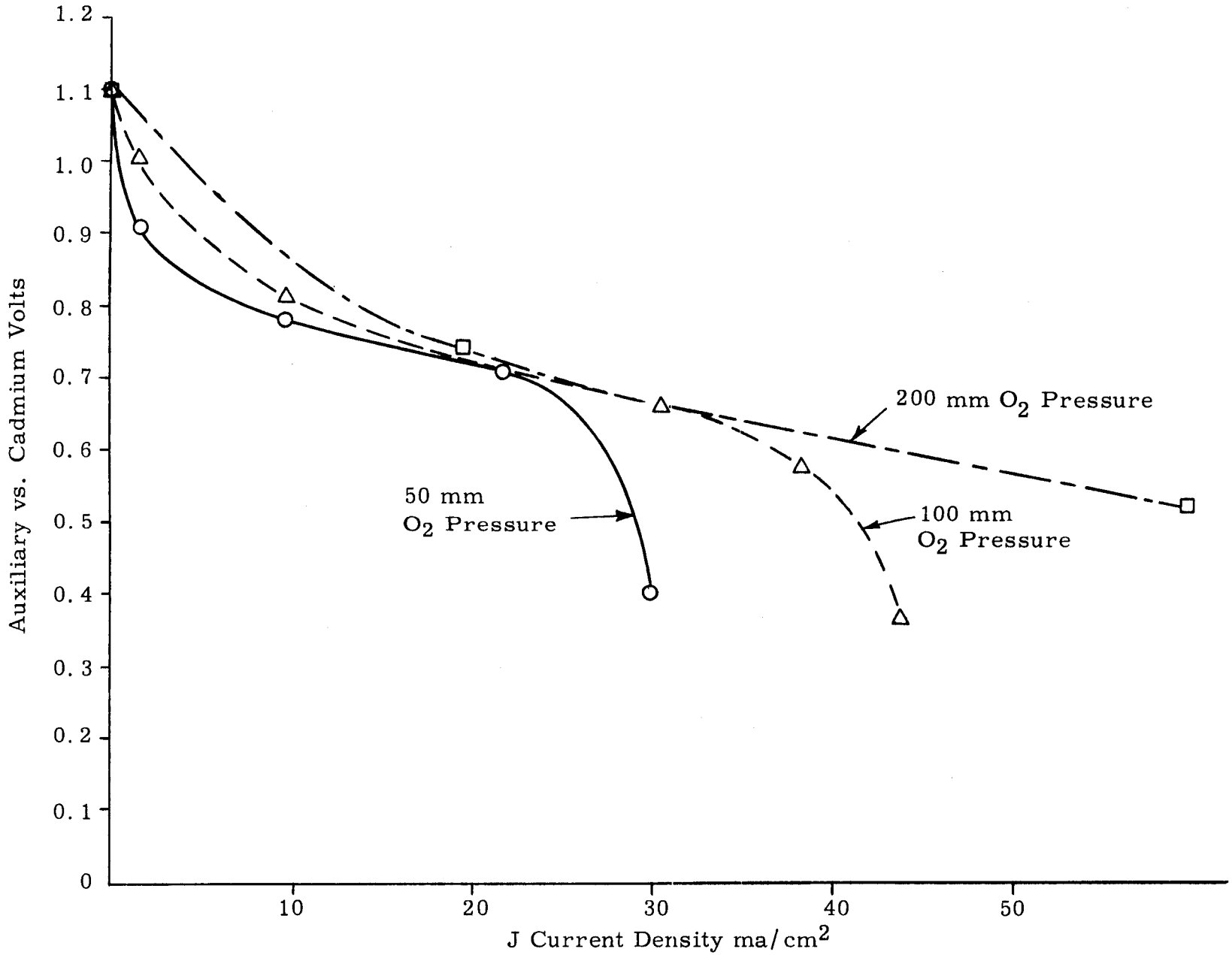

Figure 9. Auxiliary Electrode Load Curves.

4.0 DISCUSSION

The use of an auxiliary electrode in a cell requires designs in which the electrode is in contact with the cell electrolyte, but still has part of itself exposed to the gas being recombined. This imposes severe problems when high rates of charging (over C/10 to C/5) are to be used, since the area of the auxiliary electrode required is large, and it is difficult to place the electrode in the cell so that the two requirements are met. In general, this means that any cell with an auxiliary electrode will be used with a limited charging rate. If high charging rates (over C/10 to C/5) are to be used, the use of the auxiliary electrode will require a substantial increase in the size of the cell to allow for the gas space and extra electrodes. At low charging rates, less than C/5 to C/10, the area of the auxiliary electrode needed is limited, and only a small increase in size of the cell is necessary. The increase in weight for both high and low rates is relatively small, since the bulk of the increase in cell size is empty gas space.

The use of an auxiliary electrode for the control of internal gas pressure by promoting recombination is ideal for silver cells since the charging rate is limited by the basic cell system anyway. The use of auxiliary electrode permits use of simple charging circuits as it is not necessary to cut off the charging at a preset voltage, and not necessary to control the charging current closely. The auxiliary electrode cell should be particularly useful for systems in which solar cell panels are used for charging, since the panel itself can regulate the charging current satisfactorily, once the panel area has been established to give the correct range of current. The absence of regulating equipment between the battery and the solar panel means that there will be no regulator losses to allow for in the solar panel design.

The low pressure operation of cells with auxiliary electrodes allows use of light-weight cell cases, and removes the need for pressure plates, tie bolts, etc., in making up batteries. This will save considerable weight in applications of the cells. Also, the low pressure operation lessens the strain on the electrode seals, making them more reliable in use.

A problem arises in silver-cadmium cells in that there is a substantial change in cell electrolyte volume during charging and discharge. In providing gas space for the auxiliary electrode, care must be taken to avoid designs in which this space is filled by the increase in electrolyte during charging, since this blocks off the auxiliary electrode from the gas at the time it is most needed. The test cell design is not particularly good in this respect, and some of the difficulties observed in the tests, particularly the development of high internal resistance traceable to formation of dry areas on the separators, were probably due to the use of too small an amount of electrolyte. Provision for a reservoir for electrolyte can be made readily; in space cells, this should be filled with a porous, alkali-resistant material to hold the electrolyte in place by surface tension.

There is every reason to believe that the auxiliary electrode will function properly in zero gravity fields if precautions on the cell design are taken. Fuel cell electrodes operating in much the same manner as auxiliary electrodes have been shown to operate satisfactorily in actual flight tests. The main concern in the design is to immobilize the electrolyte so that it cannot collect in the gas space; in zero gravity fields this can be done by use of surface tension to hold the electrolyte in the separators and reservoir space. Since the electrode consumes gas, a pressure gradient is created; this causes gas to flow to the gas space adjacent to the electrode; the design should be such that only small gradients are needed.

In using the auxiliary electrode for long periods, the question of degradation of performance arises. The major loss in performance, aside from a physical breakdown by shock or vibration is due to wetting the electrodes. With respect to the auxiliary electrode used in the tests, the work on this type of electrode in fuel cells shows that wetting is promoted by use of high current densities and evolution of oxygen at the electrode by electrolysis. Periodic hydrogen evolution does not promote wetting, nor does intermittent operation. The electrode catalyst is promoted for oxygen catalysis by periodic evolution of hydrogen; to a lesser extent by operating as a hydrogen electrode.

The direct recombination of hydrogen and oxygen at the electrode surface is both rapid and harmless unless the electrode is overheated by the reaction. This latter can occur if a large excess of oxygen or hydrogen is present at the start of the recombination reaction and the other gas reaches the electrode at a high rate. We have not yet observed any detonation or violent pressure rise due to oxygen and hydrogen recombination; however, on several occasions, a spot on the auxiliary electrode surface has become red to white hot during the direct recombination; this hot spot does all of the catalysis of the recombination until it cools off, where upon the catalytic activity left in the spot is nil. The remaining electrode area is usually unharmed. The explosive hazard should be negligible, since the recombination takes place at concentrations of hydrogen in oxygen, or oxygen in hydrogen well below the explosive limit. The gas in minor concentration is usually being generated at relatively low rates and its partial pressure cannot build up to the explosive limit because of the rapid recombination rate. The co-existence of large concentrations of both hydrogen and oxygen in auxiliary electrode cells has never been observed; either one or the other is present at essentially 100%.

5.0 CONCLUSIONS AND RECOMMENDATIONS

The use of auxiliary electrodes in sealed silver-cadmium cells for the control of internal pressure during cyclic and continuous charging is highly feasible. Using an auxiliary cell area of 1/8 the silver electrode (2 sides) area in conventional silver-cadmium cells allows charging at rates up to C/10 with zero to 5-10 PSI pressure rises. The addition of this size auxiliary electrode to presently available cells adds little in weight, and only a small amount in volume. With proper consideration in the original design stage, a smaller increase in volume would suffice in most cases.

The operation of the silver-cadium cell is unaffected by the auxiliary electrode, nor does the use of the auxiliary electrode interfere in the use of the cell in batteries.

The ability of the auxiliary electrode to recombine hydrogen with oxygen is useful to prevent build up of this gas that may be generated at times in the cell. This ability is potentially useful in allowing the use of cell designs that have a minimum excess negative capacity.

By increasing the area of the auxiliary electrode, charging the cell at rates up to 1C can be accommodated if desired. For silver cells, this is not recommended on the basis of the harmful effects on cell cycle life.

It is recommended that the program on the use of auxiliary electrodes be continued with particular emphasis on:

1. Design of cells for use with auxiliary electrodes.
2. Long term testing of the cells.
3. Extension of auxiliary electrode techniques to silver-zinc cells.

6.0 BIBLIOGRAPHY

1.	Thos. A. Edison	U.S. 1,016,874	February 6, 1912
2.	D. W. Davis	U.S. 1,694,530	December 11, 1922
3.	P. H. Craig	U.S. 2,465,202	March 22, 1949
4.	A. Dassler	U.S. 2,104,973	January 11, 1938
5.	R. L. Tichenor	U.S. 2,378,027	December 11, 1951
6.	F. T. Bonner, et al	U.S. 2,928,889	March 15, 1960
7.	H. J. Mandel	U.S. 2,941,022	June 14, 1960
8.	P. Ruetschi	U.S. 2,951,106	August 30, 1960
9.	P. Ruetschi	U.S. 3,080,440	March 5, 1963

APPENDIX I - MASTER CLOCK

This equipment is a digital programmer used to control laboratory experiments. It can be used for cyclic control, or "one-shot" control. The capacity is 9999.9 minutes, with interval timing of 0.1 minutes. Cycles of any duration within the total time capacity can be programmed by inserting five plugs on a reset cable into the jacks representing the desired time of reset. Within a cycle, the unit can be programmed to start and stop an operation at any desired time in the cycle. A number of such operations with different start and stop times can be handled in a cycle.

The operation of the programmer is based on the use of a timer (Industrial Timer Corporation type CMO cam recycling timer is satisfactory) which produces an output pulse every 0.1 minute. The pulses are counted by a Veeder-Root B1538 counter with read-out contacts and electrical reset. The contacts are wired to a plug board where selection of the various start, stop and reset times can be made to 0.1 minute.

The master clock is composed of a plugboard and control panel, and one or more relay panels. Figure I-1 shows the schematic circuit for the plugboard and control panel; Figure I-2 shows one timing channel for the relay panel which has 5 channels in our construction. With the possible exception of the Veeder-Root counter, almost any substitution for relays, etc. can be made in the circuit if the substitute can perform the same function.

In the plugboard and control circuit, the heart of the circuit is the Veeder-Root counter. The plugboard jacks are wired to the read-out contacts shown as open circuit relay contacts. The cycle timer pulses the counter once every 0.1 minute. The timer contacts are wired so that the current to the counter read-out contacts is shut off before stepping the counter; this is necessary to preserve the life of the counter contacts.

The selection of the length of a repetitive cycle is made by inserting the plugs on the reset cable into the plugboard jacks corresponding to the digits of the time at the end of the cycle. To make sure that the circuit operates properly, each column of jacks is of a different color, and the plug for use in that column is of the same color. When the counter contacts close on all of the selected digits, the two reset relays RK-1 and RK-2 close, and a pulse enters the reset circuit of the counter. This pulse trips the reset mechanism, which then operates the reset motor and cuts off the current to the contacts until the counter has been reset to zero.

The circuit for a single timing channel (Figure I-2) uses 7 relays. The operation is the same as for reset, except two times, "start" and "stop", are involved. The plugs for the start and stop circuits are inserted in the proper jacks on the plugboard. When relays K-1 and K-2 close, and the pulse through their contacts is made, relay K-6 closes and locks in electrically

through a normally closed contact on K-5, and one of its own normally opened contacts. Relay K-7 also closes and locks in. Closing relay K-6 transfers the output from the normally closed contacts to the normally open contacts; these contacts are used in the controlled circuits at the discretion of the user. When relays K-3 and K-4 close, and the pulse to relay K-5 is made, relay 5 operates and opens up the electrical lock holding K-6 and K-7 in. These release, and the timed period is completed. Relay K-7 is used to isolate the relay circuits from spurious control signals sometimes generated when several time channels use the same jacks in the plugboard.

In use, the timer has proven valuable in saving set-up time for conducting "one-shot" experiments as well as cyclic experiments. Thus, formation of batteries can be timed so that it is possible to do this lengthy operation overnight or the weekend. Multiple timing for one channel in a cycle can be wired by jumpers on the plugboard, hence short cycles within a long cycle can be programmed. The relay and counter reliability has been high; any heavy loads should use a booster relay rather than the K-6 contacts in the controlled circuit.

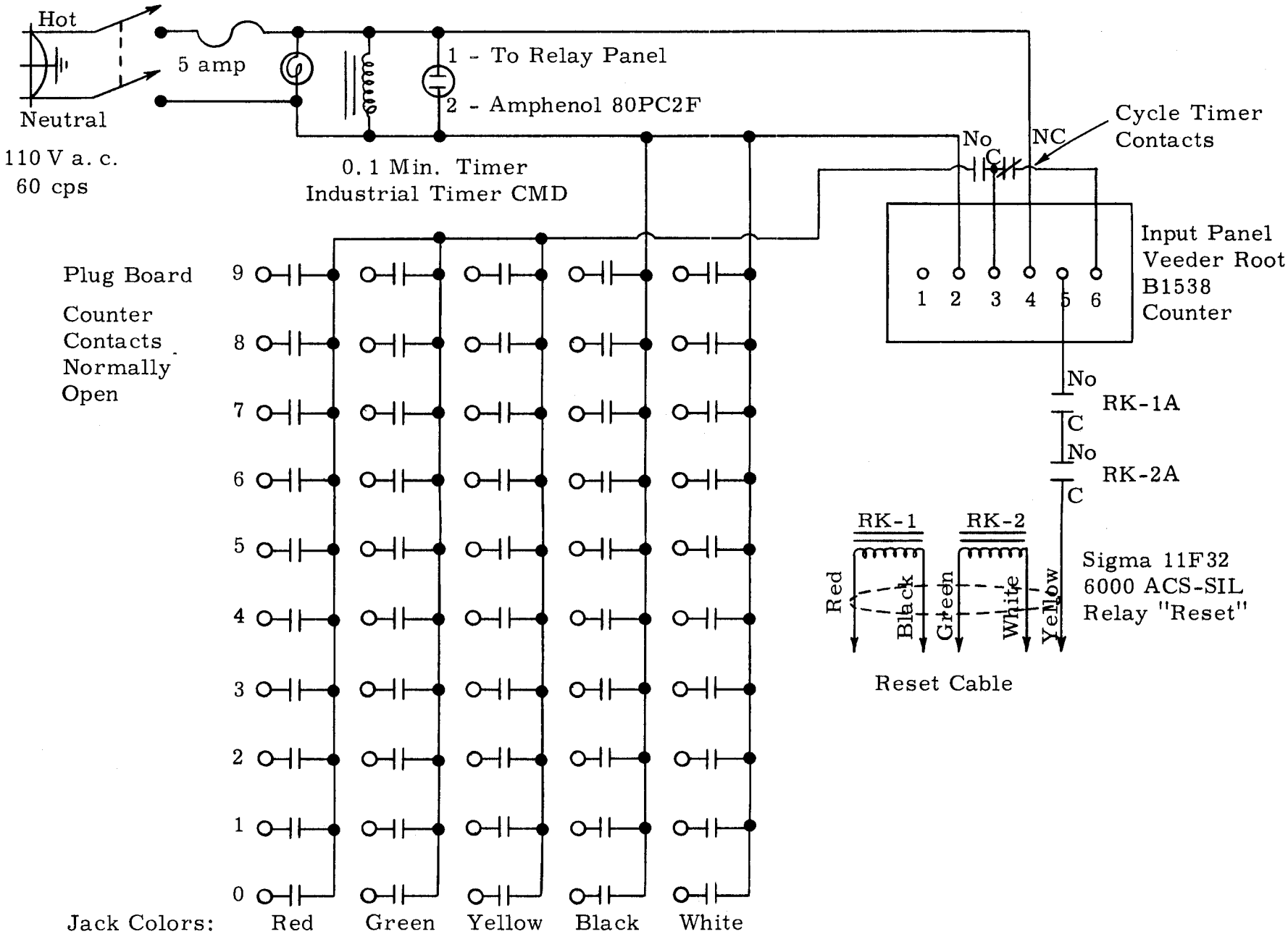

Figure I-1. Master Clock Control and Plugboard Panel Circuit.

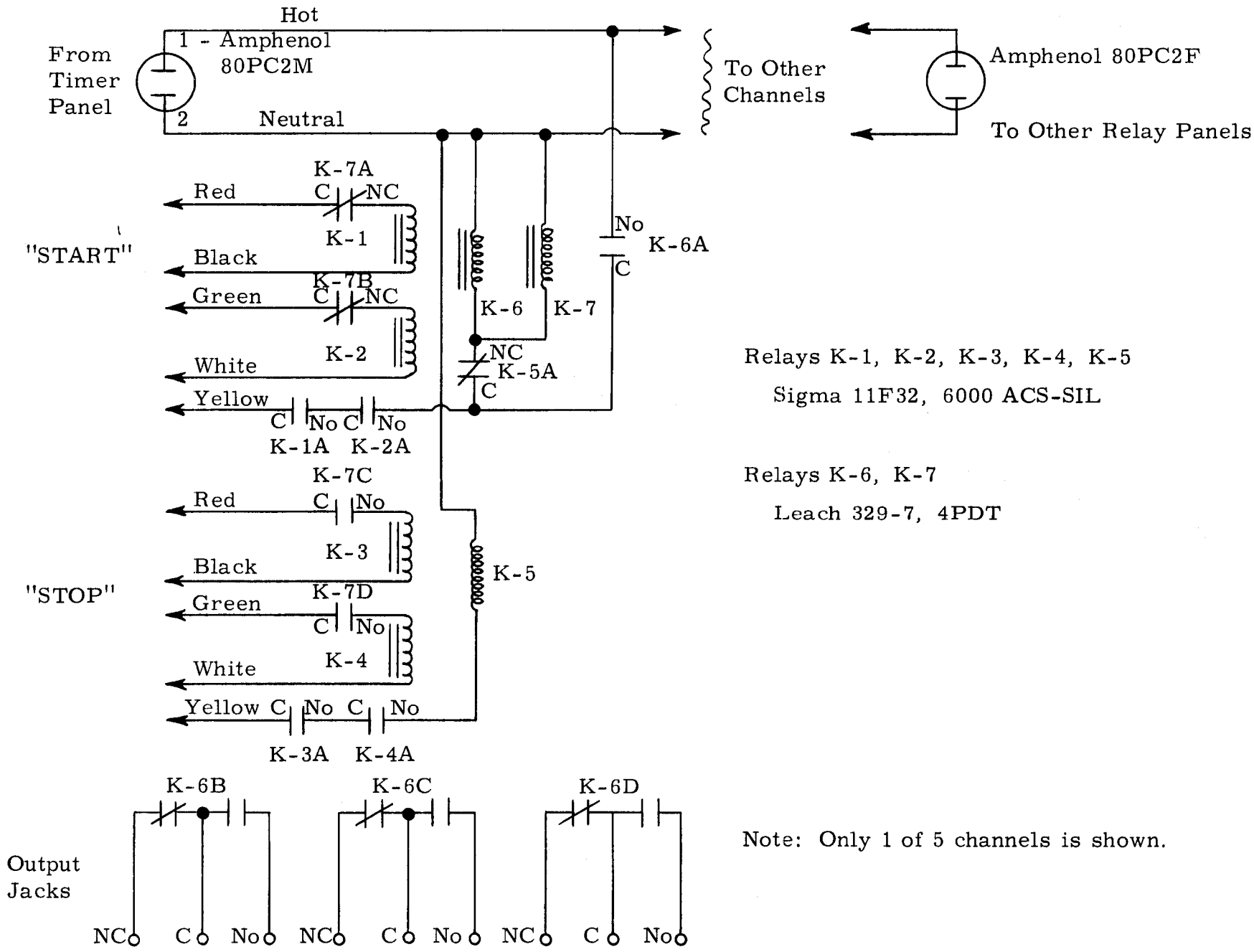

Figure I-2. Master Clock Relay Panel Circuit.

APPENDIX II - CYCLE CONTROLLER

This equipment was used to control and record the cycling of the cells during cyclic testing. The equipment provides for the cycling of ten cells as follows:

(1) charging at a selected constant current for a programmed period of time; each cell being equipped with a by-pass to remove it from charging if the cell voltage exceeded a preset maximum voltage (usually 1.9 volts);

(2) a programmed rest period;

(3) discharging at a selected constant current for a programmed period of time; each cell being equipped with a by-pass to remove it from discharge if the cell voltage fell below a preset minimum (usually 0.9 volt); and

(4) a programmed rest period.

The equipment provides for recording the electrode voltages of the cell electrodes vs. a reference electrode. Figure II-1 gives the schematic diagram for the control system; in the figure only one of the test circuits is given completely. The programming of the controller is done using the master clock described in Appendix I. One time channel is used for charging, another is used for discharging.

In the figure, timer T-1 is used to control a subprogram of cell testing and to divide the input signal to the recorders. In the latter circuit, composed of relay K-1, the bias circuit, amplifier A, and recorder R, the timer contact closes for 1/2 minute every minute. Closing and opening relay K-1 alternates the input signal from reference vs. negative electrode to reference vs. positive electrode. The input signal is offset by the bias signal to allow negative inputs, the bias signal is set on the 50,000 ohm potentiometer. The 3 megohm resistor is used as a voltmeter multiplier and is set to give a full scale reading on the recorder of 2 volts. The amplifier is operated on the 0 - 10 ua scale, the total input resistance is in the order of 2 megohms. This presents a negligible drain on the reference electrode. During operation, the voltage dividing circuit operates continuously.

The charge control uses contacts on the master timer, and is composed of relays K-2, K-3 and K-4. Relay K-2 is basically a reset relay, since it breaks the electrical power to the voltage limit control circuits, which operate with electrical interlocks. Relay K-6 in the discharge circuit performs the same function. Relay K-3 acts as a reversing relay in the meter-relay contact system; this permits use of one meter relay for voltage limit control on charge and discharge. Relay K-4, and relay K-5 in the discharge circuit,

are used to connect the charge and discharge constant-current power supplies to the cell circuit. The nature of the relay contact arrangement is dictated by the need to short circuit the power supplies through a load at all times, hence the use of the normally-closed contacts; the normally-open contacts isolate the power supplies when they are not in use and prevent ground-loop problems. In the discharge circuit, relay K-7 shifts the cell input from one meter shunt S-1 to the other (S-2) so that the correct trip voltage is used in the meter relay detection circuit. The shunts were made from 1% resistors, but the accuracy of the signal is not this good because of the contact resistance of the contacts on the KB relays and K-7. A dummy 3 ohm load is placed in the discharge circuit to provide for dissipation of power and allow control by the constant current source. The resistor value required changes with the current used, and provision for change of this resistor was made in the design.

The voltage limit control circuit is based on the use of a stepping switch circuit to sample the test-cell voltages, a meter relay to detect the voltage limits, and a timer-pulse system to operate the by-pass circuit. One set of the internal timer contacts (T-1B) is used to pulse the stepping switch; the switch is operated such that no current can flow through the contacts during switching. This operation calls for an auxiliary circuit shown in Figure II-2 to reset the switch, and is used to prolong the life of the switch contacts which are copper. After pulsing the stepping switch, one of the KB relays will be closed; and the corresponding cell connected to the meter-relay input. Shortly after the KB relay closes, the timer contact T-1C closes, closing relay K-8 which connects the meter to the cell leads. Relay K-8 is used to protect the meter coil from switching transients; the meter amplifier is used to minimize loading of the cell. After a short delay, timer contacts T-1D close; this provides a probe signal to detect a voltage limit condition. The meter used has an adjustable contact which closes as the pointer of the meter passes over it upscale. Closing this contact closes the working relay, whose contacts are shown as meter-relay contacts MR-A. During charging, relay K-3 is operated, i.e., the normally-open and normally-closed contacts are closed and open respectively. If the meter relay has not been closed, which will be the case for a cell voltage below the set point, nothing happens, and the cell remains in the charging circuit. However, if the meter relay contacts are closed, which will be the case for a cell voltage above the set point; then the KA relay corresponding to the cell will operate, and cut-off the cell (KA-B contacts). The contacts are arranged to by-pass the cell so that the remaining cells continue to be charged. The operated KA relay electrically locks in on its A contact, and remains locked until K-2 is opened.

Similarly during discharge, if the meter relay contacts are closed, the cell voltage is above the set limit, and the KA relay is not operated, since this means that the cell voltage has not declined to the minimum. If the meter relay is open, the KA relay closes and locks out the discharge current until relay K-6 is opened.

Figure II-2 gives the complete reset circuit used with the stepping switch KS. In this circuit, the KSB contacts and the KB relays are the same as for Figure II-1, and the voltage limit function is as described above. However, a latch relay KL is included which is wired so that the latch coil is activated along with relay KB10, and the latch reset is activated along with relay KB1. The latch relay contacts are used to control the stepping switch coils; after operation of KB10 and KL, the circuit sets the next step to be the reset to KB1. The latch relay reset restores the stepping switch function to the forward mode. In analyzing the operation of this circuit, it is important to remember that the stepping switch operates on a short pulse, then the current through the stepping switch contacts is turned on for the remainder of the one minute cycle.

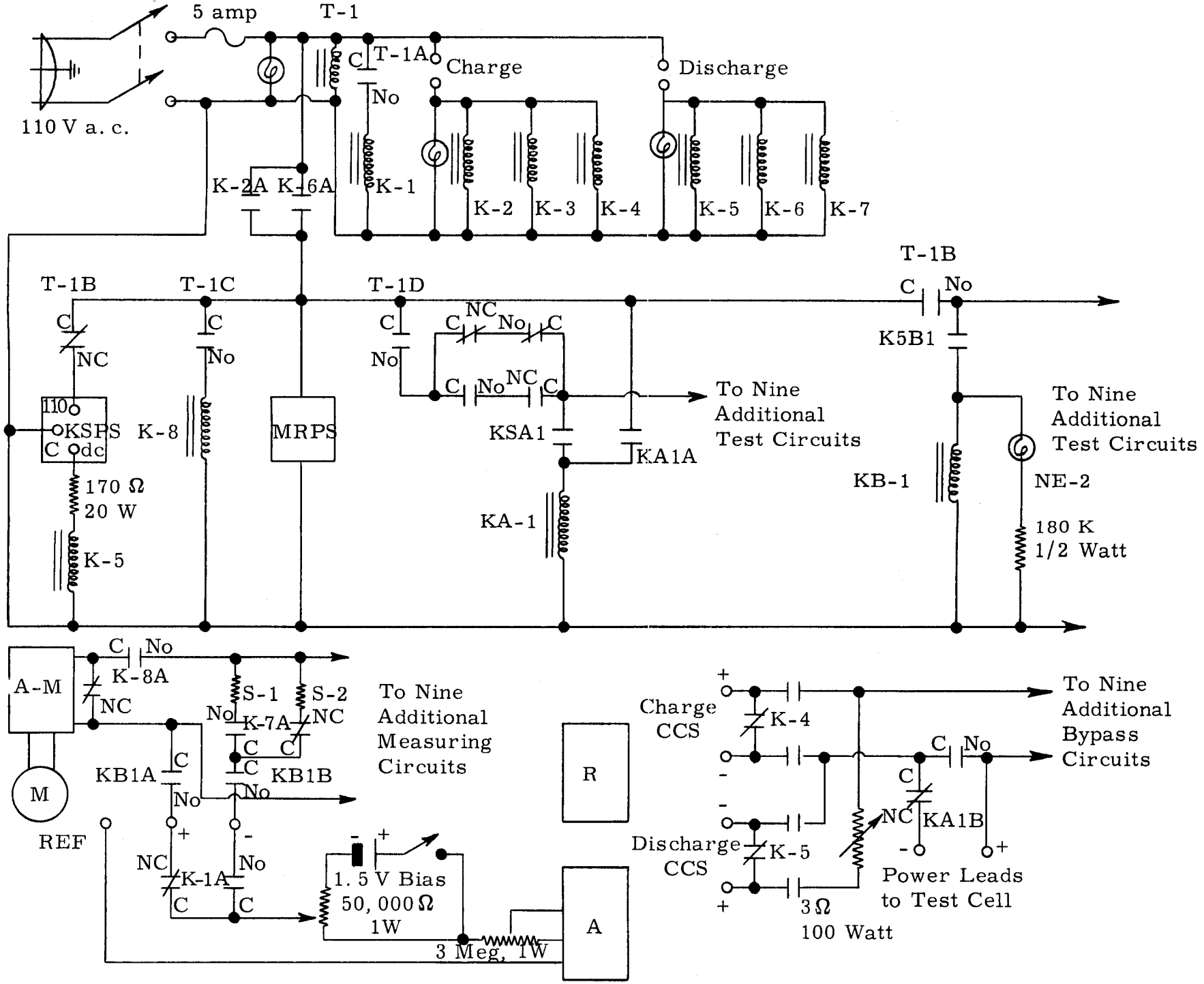

Figure II-1. Cycle Controller Circuit.

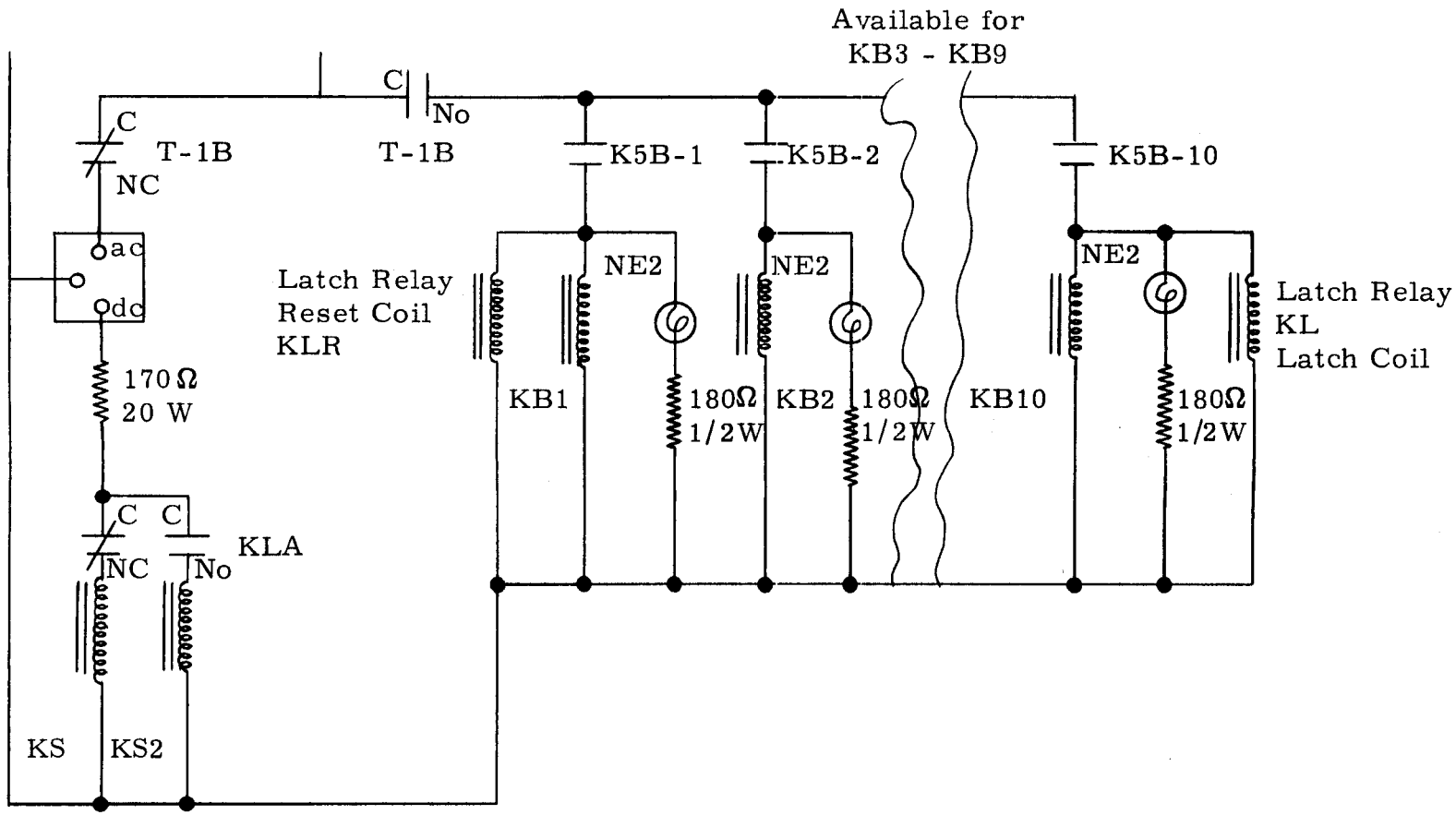

Figure II-2. Stepping Switch Reset Circuit.

LEGEND - Figures II-1 and II-2

T-1	Timer, 4 cams, 60 second cycle. Industrial Timer Corporation Type MC3, 5 watt motor, A-12 gear rack. In setting the cams, the following times are for the NO (Normally Open) contacts: T-1A Closed 0-30 seconds, open 3-60 seconds. T-1B Closed 0-50 seconds, open 50-60 seconds. T-1C Open 0-10 seconds, closed 10-40 seconds, open 40-60 seconds. T-1D Open 0-25 seconds, closed 25-30 seconds, open 30-60 seconds. The normally closed contacts (NC) are reversed from the NO contacts.
KS	Stepping switch, C. P. Clare, Direct Drive, 48VDC Coil No. DD 4802, 2 banks of 10 contacts.
KSPS	Power supply, C. P. Clare RP 8047 for stepping switch.
KSA1 thru KSA10	Stepping switch contacts, Bank A
KSB1 thru KSB10	Stepping switch contacts, Bank B
KL	Latch relay, 4PDT, latch coil 115 volt AC guardian 1R/200/1200GG/15
KLR	Latch relay, reset coil
M	Meter, high limit contacts, 0-1MA
MRPS	Meter-relay power supply
MRA	Meter-relay contacts. Relay operated from meter contacts. All of the above meter components are contained in one unit, the "Versatrol", Assembly Products Co.
KA1 thru KA10	By-pass relays, Leach 337, DPDT 110 VAC coil
KB1 thru KB10	Meter-signal relays, Leach 337, DPDT 110 VAC coil
K1	Signal-dividing relay, 10PDT (Note 1)

K2	Charge-reset relay, Ebert MR10, SPST-NO 110 VAC coil
K-3	Reversing relay, Leach 337, DPDT, 110 VAC Coil
K-4	Charge current relay, Ebert EM7, 3PST (2NO, 1NC), 110 VAC Coil
K-5	Discharge current relay, Ebert EM7, 3PST (2NO, 1NC), 110 VAC Coil
K-6	Reset relay, Ebert MR10, SPST-NO, 110 VAC Coil
K-7	Meter shunt selector, 10 PDT (Note 1)
K-8	Meter isolation relay, Ebert, MR14, DPST (1NO, 1NC), 110 VAC Coil
AM	Amplifier, Hewlett-Packard 412 (meter input)
A	Amplifier, Rustrak, 98DC (10 used)
R	Recorder, Rustrak, 0-1 Ma (10 used)
S-1	Meter shunt, charging (Note 2)
S-2	Meter shunt, discharging (Note 2)

NOTE 1: The relay called for was made up of 1 Leach 337 DPDT, and 2 Leach 329-7, 4PDT relays whose 110 VAC coils are wired in parallel.

NOTE 2: These act to convert the ammeter to a voltmeter, and were selected so that the range of the meter was twice the cut-off voltage. The meter contact was then set at the 0.5 ma mark on the meter scale. Two shunts are used to allow for change in set points. Values for 1.7 volts is 3400 ohms, for 0.9 volts is 1800 ohms, less meter coil relay contact and wiring resistance.

APPENDIX III - CONSTANT CURRENT SOURCES

Although commercial constant current sources are available for 100 ma currents and up, lower currents are not readily handled except in rather expensive units. The sources described here were used for currents below 100 ma; the circuits are similar to ones used by the author in previous electrochemical investigations.

The low range constant current source, Figure III-1, is designed to operate from 0.1 ma to about 20 ma. The circuit consists of a conventional high voltage DC source composed of the transformer, 5Y3 rectifier, and filter condenser and choke, a 6L6 series regulator power tube, and a 6SJ7 pentode control tube. For currents above 2 ma, the input terminal is shorted, and the signal across R-1 and R-2 applied to the grid of the 6SJ7 tube. A bias battery is used to bring the signal into the proper control region. The range selector resistances are used to keep the 6L6 sensitivity equal over the range of currents; in use, the lowest valued resistor that gives the desired current output is used. The circuit is conventional in most other respects. An external meter connection can be provided by removing the meter from the circuit. For currents below 2 ma, an external input resistance is needed; this is inserted at the input terminal. The output switch is wired so that the output is shorted in the off position to prevent upset of the control. It is important to note that the voltage at any break in the output current loop will rise to about 400 volts, which can cause an unpleasant shock in use. A neon warning lamp is used across the output terminals to warn of open circuit conditions; the load voltage should normally be below the 90 volts needed to fire the lamp.

After warm-up, and with proper selection of the input resistors, the current is stable to better than 0.1% over periods of hours, and 0.2% from day to day.

Figure III-2 shows the circuit for the source which has a range of 10-100 ma. It is basically the same as for the lower current supply, but uses two parallel 6L6 tubes to obtain the higher output, and different range selector resistances.

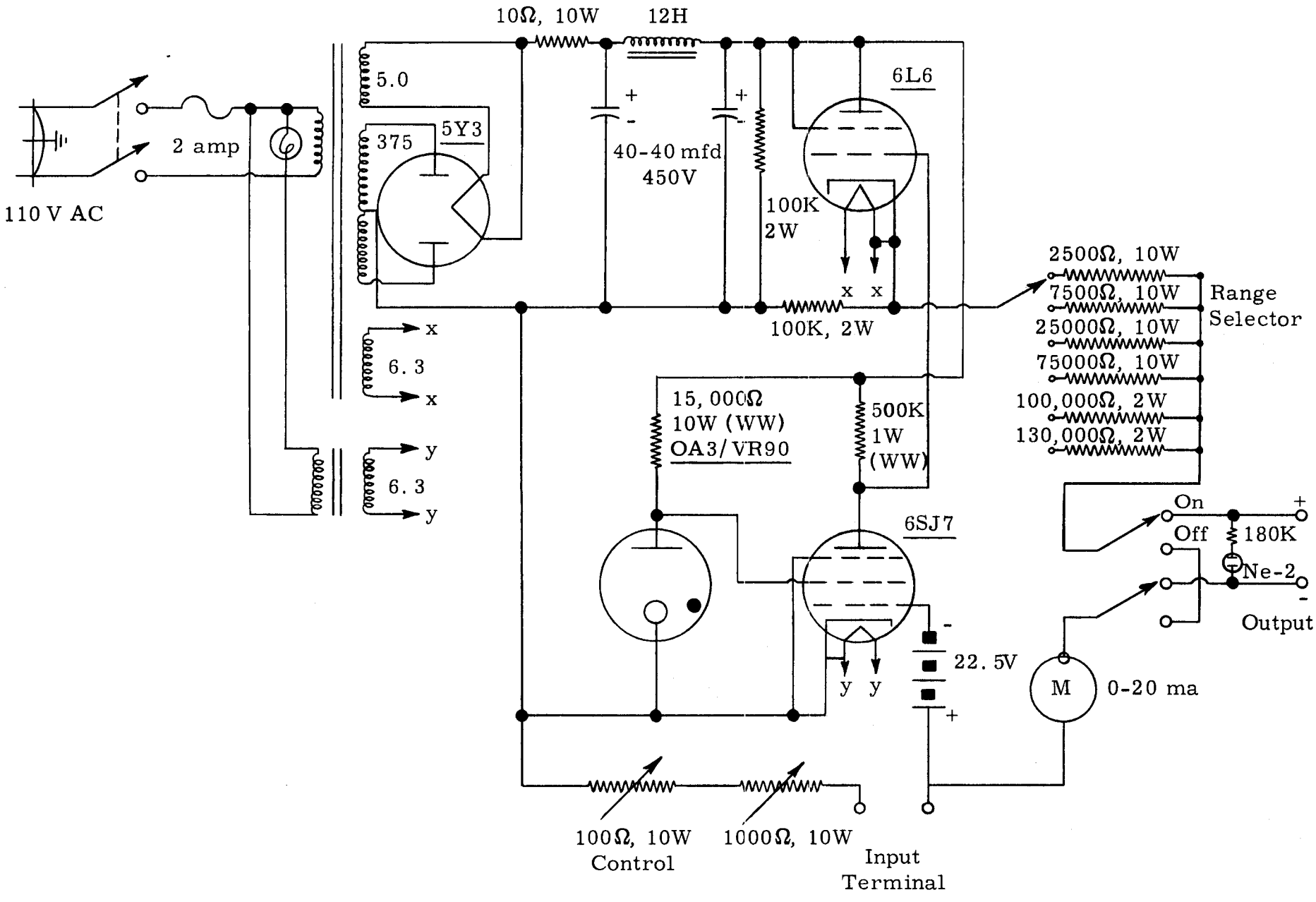

Figure III-1. Low Range Constant Current Source Circuit.

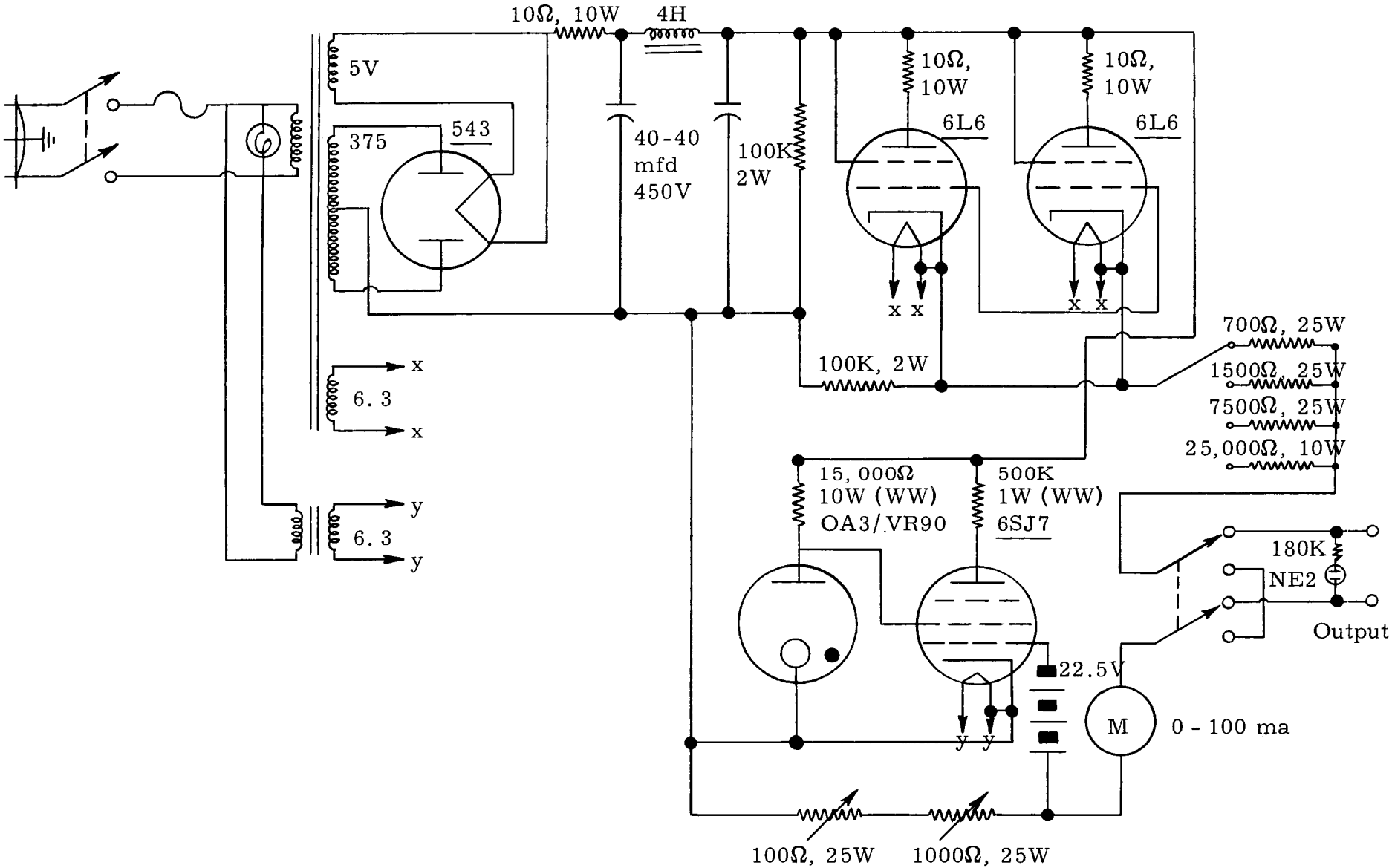

Figure III-2. Medium Range Constant Current Source Circuit.