**NASA TECHNICAL NOTE**

NASA TN D-2201

C. 1

NASA TN D-2201

LOAN COPY: RET
AFWL (WLL.
KIRTLAND AFB,

TECH LIBRARY KAFB, NM
0154589

# LONGITUDINAL AERODYNAMIC CHARACTERISTICS OF BLUNTED CONES AT MACH NUMBERS OF 3.5, 4.2, AND 6.0

*by J. Wayne Keyes*

*Langley Research Center*
*Langley Station, Hampton, Va.*

NATIONAL AERONAUTICS AND SPACE ADMINISTRATION • WASHINGTON, D. C. • FEBRUARY 1964

TECH LIBRARY KAFB, NM

0154589

# LONGITUDINAL AERODYNAMIC CHARACTERISTICS OF BLUNTED CONES AT MACH NUMBERS OF 3.5, 4.2, AND 6.0

By J. Wayne Keyes

Langley Research Center
Langley Station, Hampton, Va.

NATIONAL AERONAUTICS AND SPACE ADMINISTRATION

For sale by the Office of Technical Services, Department of Commerce,
Washington, D.C. 20230 -- Price $1.75

# LONGITUDINAL AERODYNAMIC CHARACTERISTICS OF BLUNTED CONES AT MACH NUMBERS OF 3.5, 4.2, AND 6.0

By J. Wayne Keyes

## SUMMARY

Force and moment data were obtained for a family of low-fineness-ratio blunted-cone configurations. Each configuration had a nose bluntness ratio of 0 (spherical cap), 0.50, or 0.75, fineness ratio of 0.50, 0.75, or 1.00, cone half-angle of $10^{\circ}$, $15^{\circ}$, or $20^{\circ}$, and flat, convex ($23.58^{\circ}$ and $40^{\circ}$), concave, or conical ($66.42^{\circ}$ and $50^{\circ}$ half-angle) base shape. The test Reynolds number varied from $2.3 \times 10^{6}$ to $5.5 \times 10^{6}$, based on a 4-inch model base diameter.

The results of the investigation indicate that nose bluntness had little effect on the stability characteristics at angles of attack $\alpha$ of $0^{\circ}$ and $180^{\circ}$. An increase in fineness ratio or a decrease in cone half-angle resulted in a decrease in stability near $\alpha = 0^{\circ}$ and had no effect at $\alpha = 180^{\circ}$. Of the base shapes studied only the $50^{\circ}$ half-angle conical base was unstable at $\alpha = 180^{\circ}$ for the forebody configuration having a spherical-cap nose, fineness ratio of 1.00, and $15^{\circ}$ cone half-angle. Estimated variations of the aerodynamic characteristics with angle of attack obtained by means of modified Newtonian theory were in good agreement with the measured results.

## INTRODUCTION

An investigation of the nature of the atmospheres of near Earth planets (Mars and Venus) is of great importance to the space research program. A desirable method of obtaining direct measurements of the properties of a planetary atmosphere would be the passage of a probe vehicle through the atmosphere. In order to insure that the vehicle is oriented properly, it should be designed so that aerodynamic forces maintain a nose-forward attitude throughout the trajectory (see ref. 1).

As part of an overall research program at the Langley Research Center, an investigation was conducted in the Langley 20-inch variable Mach number tunnel on a complete family of low-fineness-ratio blunted-cone configurations, some of which could be used as possible planetary probe vehicles. The purpose of the investigation was to establish the aerodynamic characteristics of this family of blunted-cone configurations over an angle-of-attack range from $0^{\circ}$ to $180^{\circ}$, while varying such geometric parameters as nose bluntness ratio, fineness ratio, cone half-angle, and base shape, and in particular to find a base shape that

would be unstable at 180°. The tests were conducted at Mach numbers of 3.5, 4.2, and 6.0. Similar configurations have been tested at Mach numbers from 0.65 to 15 and are discussed in references 2 to 11.

This paper presents the results of the experimental investigation and of a comparison of the measured data with estimations obtained by modified Newtonian theory.

## SYMBOLS

| | |
|---|---|
| $a$ | diameter of front face of cone frustum, in. |
| $b$ | diameter of flat face of model nose, in. |
| $C_A$ | body axial-force coefficient, $F_A/q_\infty S$ |
| $C_D$ | drag coefficient, $D/q_\infty S$ |
| $C_L$ | lift coefficient, $L/q_\infty S$ |
| $C_m$ | pitching-moment coefficient, $M/q_\infty Sd$ |
| $C_N$ | body normal-force coefficient, $F_N/q_\infty S$ |
| $D$ | drag, lb |
| $d$ | diameter of model base, in. |
| $F_A$ | axial force, lb |
| $F_N$ | normal force, lb |
| $K$ | nose bluntness, $b/a$ (see fig. 2(a)) |
| $L$ | lift, lb |
| $l$ | length of model forebody, in. |
| $M_\infty$ | free-stream Mach number |
| $M$ | pitching moment, in-lb |
| $q_\infty$ | free-stream dynamic pressure, lb/sq in. abs |
| $r$ | nose-edge radius, in. (see fig. 2(b)) |
| $S$ | base area of model, sq in. |
| $\alpha$ | angle of attack of model center line, deg |
| $\alpha_i$ | angle between model center line and sting center line, deg |

$\theta$ cone half-angle, deg

$\lambda$ fineness ratio, $l/d$

## APPARATUS, TESTS, AND MODELS

### Tunnels

This investigation was conducted in the Langley 20-inch variable Mach number tunnel and the Langley 20-inch Mach 6 tunnel both of which are the intermittent type exhausting into the atmosphere. The variable Mach number tunnel can operate at Mach numbers from 3 to 5 and stagnation pressures from 5 to 20 atmospheres depending on the Mach number. The Mach 6 tunnel can operate at stagnation pressures from 18 to 35 atmospheres and stagnation temperatures up to 600° F. A more complete description of these tunnels is given in reference 12.

### Sting and Support System

The support system in the variable Mach number tunnel operates in the vertical plane with a support angle-of-attack range from about -20° to 20°, whereas the Mach 6 tunnel has a gooseneck type of support system which operates in the horizontal plane with a support angle-of-attack range from about -15° to 30°. In order to cover the complete model angle-of-attack range with minimum sting effects, two stings were used in conjunction with the three model mounting positions shown in figure 1. Model and sting positions for each tunnel are given in the following table:

| Angle-of-attack range, deg | Sting angle, deg | Model position, $\alpha_i$, deg |
|---|---|---|
| Variable Mach number tunnel | | |
| -5 to 20 | 0 | 0 |
| 17 to 50 | 30 (bent) | 0 |
| 45 to 79 | 30 (bent) | 90 |
| 75 to 110 | 0 | 90 |
| 107 to 140 | 30 (bent) | 90 |
| 135 to 169 | 30 (bent) | 180 |
| 165 to 185 | 0 | 180 |
| Mach 6 tunnel | | |
| -5 to 30 | 0 | 0 |
| 15 to 60 | 30 (bent) | 0 |
| 60 to 105 | 0 | 90 |
| 75 to 120 | 0 | 90 |
| 120 to 165 | 30 (bent) | 180 |
| 150 to 185 | 0 | 180 |

## Tests

The tests were conducted at Mach numbers of 3.5, 4.2, and 6.0 with stagnation pressures of about 6, 12.5, and 25 atmospheres, respectively, and Reynolds numbers based on a 4-inch model base diameter of $3.7 \times 10^6$, $5.5 \times 10^6$, and $2.3 \times 10^6$, respectively. Tunnel stagnation temperature was ambient temperature for $M_\infty = 3.5$ and 4.2 and 400° F for $M_\infty = 6.0$. The model angle of attack varied from -5° to 185°.

## Models

The models were designed to form a systematic variation in the following geometric parameters: nose bluntness K, fineness ratio $\lambda$, cone half-angle $\theta$, and base shape. Each configuration was designated by a four-digit code which is defined in the following table:

| Digit | Code | Parameter | | | |
|---|---|---|---|---|---|
| | | K | $\lambda$ | $\theta$ | Base shape |
| First | 1 | 0 (spherical cap) | | | |
| | 2 | 0.50 | | | |
| | 3 | .75 | | | |
| Second | 1 | | 0.50 | | |
| | 2 | | .75 | | |
| | 3 | | 1.00 | | |
| Third | 1 | | | 10 | |
| | 2 | | | 15 | |
| | 3 | | | 20 | |
| Fourth | 1 | | | | Flat |
| | 2 | | | | 23.58° convex |
| | 3 | | | | Concave |
| | 4 | | | | 66.42° half-angle cone |
| | 5 | | | | 40° convex |
| | 6 | | | | 50° half-angle cone |

For example, model 1221 has a spherical-cap nose, fineness ratio of 0.75, cone half-angle of 15°, and flat base.

A sketch of a model showing design dimensions, nose shapes, and base shapes is presented in figure 2. Bases 2 and 4 were similar in that both had the same tangent angle (23.58°) at the point of intersection of the model forebody and the base. Bases 5 and 6 also had the same tangent angle (40°). Bases 2 and 3 had the same spherical radius of 1.25 base diameters, whereas base 5 had a spherical radius of 0.778 base diameter. All dimensions were based on a model

base diameter of 4 inches except those for the models with a fineness ratio of 0.50 mounted in the $\alpha_i = 90^\circ$ position (fig. 1) and these dimensions were based on a base diameter of 6 inches. Photographs of model 1221 mounted in the variable Mach number tunnel are shown as figure 3.

## MEASUREMENTS AND ACCURACY

Aerodynamic forces and moments were measured by a six-component strain-gage balance. The force and moment coefficients are referred to the body-axis system shown in figure 1. For all models the moment center was located at a point one-third of the forebody length forward of the maximum model diameter. The axial-force coefficient has not been corrected for base pressure effects. All measured data ($C_N$, $C_A$, and $C_m$) are presented in table I along with calculated values of $C_L$ and $C_D$.

On the basis of calibrations and repeatability of data it is estimated that the measured quantities are accurate within the following limits:

| | $M_\infty = 3.5$ | $M_\infty = 4.2$ | $M_\infty = 6.0$ |
|---|---|---|---|
| $C_A$ | ±0.014 | ±0.012 | ±0.024 |
| $C_N$ | ±.016 | ±.014 | ±.029 |
| $C_m$ | ±.008 | ±.007 | ±.015 |

The accuracy of angle of attack and of free-stream Mach number is estimated to be within ±0.10 and ±0.03, respectively.

Examination of the tabulated data indicates that there are offset discontinuities in the variation of the coefficients with angle of attack at which changes are made in the mounting position of the model to the sting. Apparently there are varying influences of the sting on the model characteristics depending on where the sting is attached to the model. Therefore, in order to use the tabulated data for any given configuration, the data should be first plotted and faired over the complete angle-of-attack range.

## RESULTS AND DISCUSSION

The method of presenting the plotted data consists of choosing configurations from table I to show the effect of Mach number (fig. 4), nose bluntness (fig. 5), fineness ratio (fig. 6), cone half-angle (fig. 7), and base shape (fig. 8) on the longitudinal aerodynamic characteristics. The effects of the last four variations are presented by holding three of the geometric parameters constant and then varying the fourth. For example, figure 5 shows the effect of nose bluntness by using configurations 1221, 2221, and 3221. Theoretical estimations of the variation of the aerodynamic characteristics with angle of

attack are presented for comparison with the measured data in figures 5 to 9. Modified Newtonian theory was used to calculate these estimations based on the methods of references 6 and 13 by using the stagnation pressure behind a normal shock. In general, values obtained from use of modified Newtonian theory give a good indication of the trend of the experimental data, as shown in references 3, 5, and 6.

## Mach Number

It can be seen from figure 4 that the effect of Mach number is small and does not affect the overall trend of the data. The same is true for any given configuration listed in table I. Therefore, only data for $M_\infty = 6.0$ are presented in the figures for geometric variations of the model.

## Nose Bluntness

Figure 5(a) shows that nose bluntness has little effect on the stability characteristics of configurations 1221, 2221, and 3221 at $\alpha = 0^\circ$ or $\alpha = 180^\circ$. Modified Newtonian theory did not indicate that the trim point at $\alpha = 180^\circ$ would be stable. However, the theory did give a good indication of the trend of the variation of the measured coefficients with angle of attack.

## Fineness Ratio

The trend of decreasing stability with an increase in fineness ratio at the lower angles of attack is shown in figure 6(a). This trend was also observed in references 10 and 11. The configurations with fineness ratios of 0.50 and 0.75 are stable, whereas the configuration with a fineness ratio of 1.00 is unstable at $\alpha = 0^\circ$, as was also observed in reference 11. In addition, figure 6(a) shows that the variation of fineness ratio has no effect on the stable trim point at $\alpha = 180^\circ$ for the flat-base model. As the fineness ratio increases, the spherical-cap portion of each configuration is reduced with a resulting decrease in axial-force coefficient near $\alpha = 0^\circ$.

## Cone Half-Angle

In figure 7(a) a decrease in stability is indicated near $\alpha = 0^\circ$ for a decrease in cone half-angle. Also, the stable trim point at $\alpha = 180^\circ$ remains unchanged with increases in cone half-angle. A decrease in axial-force coefficient occurs with an increase in cone half-angle at the low angles of attack but to a lesser degree than that observed for an increase in fineness ratio.

## Base Shape

Varying the base shape had a negligible effect on the aerodynamic characteristics up to an angle of attack where the base is no longer shielded from

the flow. Beyond this angle of attack there is a pronounced effect on $C_m$ and $C_A$. (See fig. 8(a).) However, not one of the three base shapes (flat, 23.58° convex, or concave) could eliminate the stable trim point at $\alpha = 180°$. Both the 66.42° half-angle conical and the 40° convex bases were stable at 180°, whereas the 50° half-angle conical base was unstable for the moment-center location and forebody configuration chosen (fig. 9(a)). Modified Newtonian theory gives a good estimation of the trend of the data near $\alpha = 180°$ for all base shapes except the flat and concave bases. The movement of the moment center to the center of volume of the configuration of figure 9(a) had no effect on the pitching-moment characteristics near $\alpha = 180°$, as shown in figure 9(b).

## CONCLUSIONS

The results of an investigation of a family of low-fineness-ratio blunted-cone configurations with varying nose bluntness, fineness ratio, cone half-angle, and base shape at Mach numbers of 3.5, 4.2, and 6.0 indicate the following conclusions:

1. Nose bluntness had little effect on the stability characteristics at angles of attack of 0° and 180°.

2. An increase in fineness ratio or a decrease in forebody cone half-angle resulted in a decrease in stability characteristics near 0° angle of attack and had no effect at 180°.

3. Of the base shapes tested only the 50° half-angle conical base was unstable at 180° angle of attack for the forebody configuration having a spherical-cap nose, fineness ratio of 1.00, and 15° cone half-angle.

4. Generally, modified Newtonian theory estimations were in good agreement with the measured aerodynamic coefficients.

Langley Research Center,
National Aeronautics and Space Administration,
Langley Station, Hampton, Va., November 26, 1963.

## REFERENCES


1. Peterson, Victor L.: Motions of a Short 10° Blunted Cone Entering a Martian Atmosphere at Arbitrary Angles of Attack and Arbitrary Pitching Rates. NASA TN D-1326, 1962.

2. Wehrend, William R., Jr.: Wind-Tunnel Investigation of the Static and Dynamic Stability Characteristics of a 10° Semivertex Angle Blunted Cone. NASA TN D-1202, 1962.

3. Treon, Stuart L.: Static Aerodynamic Characteristics of Short Blunt Cones With Various Nose and Base Cone Angles at Mach Numbers From 0.6 to 5.5 and Angles of Attack to 180°. NASA TN D-1327, 1962.

4. Intrieri, Peter F.: Free-Flight Measurements of the Static and Dynamic Stability and Drag of a 10° Blunted Cone at Mach Numbers 3.5 and 8.5. NASA TN D-1299, 1962.

5. Fohrman, Melvin J.: Static Aerodynamic Characteristics of a Short Blunt 10° Semivertex Angle Cone at a Mach Number of 15 in Helium. NASA TN D-1648, 1963.

6. Neal, Luther, Jr.: Aerodynamic Characteristics at a Mach Number of 6.77 of a 9° Cone Configuration, With and Without Spherical Afterbodies, at Angles of Attack up to 180° With Various Degrees of Nose Blunting. NASA TN D-1606, 1963.

7. Letko, William: Experimental Investigation at a Mach Number of 3.11 of the Lift, Drag, and Pitching-Moment Characteristics of a Number of Blunt Low-Fineness-Ratio Bodies. NASA MEMO 1-18-59L, 1959.

8. McDearman, Russell W., and Lawson, Warren A.: Investigation of the Normal-Force, Axial-Force, and Pitching-Moment Characteristics of Blunt Low-Fineness-Ratio Bodies of Revolution at a Mach Number of 3.55. NASA TM X-467, 1961.

9. Wehrend, William R., Jr., and Reese, David E., Jr.: Wind-Tunnel Tests of the Static and Dynamic Stability Characteristics of Four Ballistic Re-Entry Bodies. NASA TM X-369, 1960.

10. Brooks, Cuyler W., Jr., and Trescot, Charles D., Jr.: Transonic Investigation of the Effects of Nose Bluntness, Fineness Ratio, Cone Angle, and Base Shape on the Static Aerodynamic Characteristics of Short, Blunt Cones at Angles of Attack to 180°. NASA TN D-1926, 1963.

11. Shaw, David S., Fuller, Dennis E., and Babb, C. Donald: Effects of Nose Bluntness, Fineness Ratio, Cone Angle, and Model Base on the Static Aerodynamic Characteristics of Blunt Bodies at Mach Numbers of 1.57, 1.80, and 2.16 and Angles of Attack up to 180°. NASA TN D-1781, 1963.

12. Sterrett, James R., and Emery, James C.: Extension of Boundary-Layer-Separation Criteria to a Mach Number of 6.5 by Utilizing Flat Plates With Forward-Facing Steps. NASA TN D-618, 1960.

13. Wells, William R., and Armstrong, William O.: Tables of Aerodynamic Coefficients Obtained From Developed Newtonian Expressions for Complete and Partial Conic and Spheric Bodies at Combined Angles of Attack and Sideslip With Some Comparisons With Hypersonic Experimental Data. NASA TR R-127, 1962.

TABLE I.- AERODYNAMIC CHARACTERISTICS OF MODELS

| Configuration | α, deg | $M_\infty = 3.5$ $C_N$ | $C_A$ | $C_m$ | $C_L$ | $C_D$ | $M_\infty = 4.2$ $C_N$ | $C_A$ | $C_m$ | $C_L$ | $C_D$ |
|---|---|---|---|---|---|---|---|---|---|---|---|
| 1111 | -5.00 | -.0641 | .8881 | .0110 | .0135 | .8903 | -.0595 | .8850 | .0098 | .0178 | .8868 |
| | -3.00 | -.0340 | .8987 | .0059 | .0130 | .8993 | -.0279 | .8895 | .0044 | .0187 | .8898 |
| | -1.00 | -.0031 | .8968 | .0006 | .0125 | .8968 | .0033 | .8917 | -.0011 | .0189 | .8915 |
| | .00 | .0118 | .9035 | -.0024 | .0118 | .9035 | .0179 | .8927 | -.0038 | .0179 | .8927 |
| | 1.00 | .0257 | .9027 | -.0047 | .0099 | .9030 | .0309 | .8924 | -.0062 | .0153 | .8928 |
| | 3.00 | .0541 | .9017 | -.0096 | .0068 | .9033 | .0590 | .8898 | -.0105 | .0123 | .8917 |
| | 5.00 | .0828 | .8997 | -.0143 | .0041 | .9035 | .0878 | .8883 | -.0152 | .0101 | .8926 |
| | 10.00 | .1527 | .8911 | -.0256 | -.0043 | .9041 | .1603 | .8839 | -.0268 | .0044 | .8983 |
| | 15.00 | .2236 | .8853 | -.0371 | -.0131 | .9130 | .2303 | .8721 | -.0383 | -.0032 | .9020 |
| | 20.00 | .2963 | .8760 | -.0490 | -.0212 | .9245 | .2996 | .8538 | -.0498 | -.0105 | .9048 |
| | 16.00 | .2466 | .8902 | -.0418 | -.0084 | .9237 | .2360 | .8667 | -.0392 | -.0120 | .8982 |
| | 20.00 | .3037 | .8832 | -.0514 | -.0167 | .9338 | .2896 | .8537 | -.0478 | -.0199 | .9012 |
| | 25.00 | .3653 | .8547 | -.0617 | -.0301 | .9290 | .3534 | .8303 | -.0584 | -.0306 | .9019 |
| | 30.00 | .4266 | .8306 | -.0719 | -.0459 | .9326 | .4135 | .8025 | -.0682 | -.0432 | .9018 |
| | 35.00 | .4841 | .7998 | -.0816 | -.0621 | .9329 | .4657 | .7680 | -.0771 | -.0590 | .8962 |
| | 40.00 | .5353 | .7712 | -.0902 | -.0856 | .9349 | .5139 | .7321 | -.0854 | -.0769 | .8911 |
| | 45.00 | .5727 | .7246 | -.0965 | -.1074 | .9174 | .5520 | .6880 | -.0913 | -.0962 | .8768 |
| | 50.00 | .5944 | .6750 | -.0991 | -.1350 | .8892 | .5755 | .6415 | -.0952 | -.1215 | .8532 |
| | 45.00 | .5512 | .7128 | -.0913 | -.1142 | .8938 | .5371 | .7007 | -.0880 | -.1157 | .8753 |
| | 50.00 | .5741 | .6719 | -.0948 | -.1457 | .8717 | .5594 | .6514 | -.0917 | -.1394 | .8472 |
| | 55.00 | .5842 | .6120 | -.0968 | -.1662 | .8295 | .5766 | .6039 | -.0946 | -.1640 | .8187 |
| | 60.00 | .5874 | .5748 | -.0982 | -.2041 | .7961 | .5761 | .5562 | -.0952 | -.1936 | .7770 |
| | 65.00 | .5824 | .5192 | -.0979 | -.2245 | .7472 | .5722 | .5027 | -.0949 | -.2138 | .7311 |
| | 70.00 | .5690 | .4610 | -.0970 | -.2386 | .6924 | .5591 | .4469 | -.0934 | -.2287 | .6782 |
| | 75.00 | .5508 | .3995 | -.0947 | -.2433 | .6354 | .5437 | .3897 | -.0915 | -.2357 | .6261 |
| | 75.00 | .5342 | .3974 | -.0936 | -.2456 | .6189 | .5279 | .3792 | -.0913 | -.2297 | .6080 |
| | 80.00 | .5168 | .3384 | -.0910 | -.2436 | .5677 | .5108 | .3225 | -.0882 | -.2289 | .5590 |
| | 85.00 | .4937 | .2723 | -.0867 | -.2283 | .5155 | .4829 | .2590 | -.0830 | -.2159 | .5037 |
| | 90.00 | .4668 | .1993 | -.0809 | -.1993 | .4668 | .4617 | .1958 | -.0781 | -.1958 | .4617 |
| | 95.00 | .4442 | .1128 | -.0757 | -.1511 | .4327 | .4355 | .1192 | -.0723 | -.1567 | .4234 |
| | 100.00 | .4244 | .0209 | -.0717 | -.0943 | .4144 | .4072 | .0312 | -.0670 | -.1014 | .3956 |
| | 105.00 | .3993 | -.0952 | -.0675 | -.0113 | .4103 | .3788 | -.0772 | -.0633 | -.0234 | .3859 |
| | 110.00 | .3742 | -.2478 | -.0624 | .1049 | .4364 | .3511 | -.2232 | -.0587 | .0896 | .4062 |
| | 105.00 | .3828 | -.1241 | -.0658 | .0208 | .4019 | .3747 | -.1036 | -.0621 | .0031 | .3887 |
| | 110.00 | .3545 | -.2916 | -.0608 | .1528 | .4328 | .3443 | -.2515 | -.0575 | .1185 | .4095 |
| | 115.00 | .3278 | -.4580 | -.0539 | .2766 | .4907 | .3161 | -.4164 | -.0506 | .2438 | .4625 |
| | 120.00 | .2971 | -.6450 | -.0445 | .4100 | .5798 | .2860 | -.6045 | -.0428 | .3805 | .5500 |
| | 125.00 | .2678 | -.8435 | -.0332 | .5374 | .7032 | .2532 | -.8097 | -.0321 | .5181 | .6718 |
| | 130.00 | .2302 | -1.0371 | -.0189 | .6465 | .8429 | .2144 | -1.0056 | -.0180 | .6325 | .8106 |
| | 135.00 | .1857 | -1.2214 | -.0036 | .7324 | .9950 | .1701 | -1.2051 | -.0024 | .7318 | .9724 |
| | 135.00 | .1534 | -1.2603 | -.0008 | .7827 | .9997 | .1443 | -1.2103 | -.0001 | .7538 | .9578 |
| | 140.00 | .1133 | -1.3842 | .0134 | .8029 | 1.1332 | .1106 | -1.3502 | .0141 | .7832 | 1.1054 |
| | 145.00 | .0786 | -1.4852 | .0221 | .7875 | 1.2617 | .0784 | -1.4557 | .0230 | .7708 | 1.2374 |
| | 150.00 | .0502 | -1.5426 | .0249 | .7278 | 1.3610 | .0545 | -1.5352 | .0276 | .7204 | 1.3568 |
| | 155.00 | .0295 | -1.6024 | .0259 | .6505 | 1.4648 | .0339 | -1.6009 | .0297 | .6459 | 1.4652 |
| | 160.00 | .0100 | -1.6508 | .0235 | .5552 | 1.5546 | .0152 | -1.6402 | .0275 | .5467 | 1.5465 |
| | 165.00 | .0007 | -1.6897 | .0185 | .4366 | 1.6323 | .0060 | -1.6749 | .0235 | .4277 | 1.6194 |
| | 169.00 | -.0018 | -1.7134 | .0120 | .3287 | 1.6816 | .0021 | -1.6955 | .0184 | .3214 | 1.6648 |
| | 165.00 | .0026 | -1.6269 | .0227 | .4186 | 1.5722 | .0065 | -1.6581 | .0235 | .4228 | 1.6033 |
| | 170.00 | -.0011 | -1.6604 | .0163 | .2894 | 1.6350 | .0021 | -1.6722 | .0170 | .2883 | 1.6472 |
| | 175.00 | -.0004 | -1.6597 | .0100 | .1451 | 1.6534 | .0035 | -1.6963 | .0094 | .1443 | 1.6902 |
| | 177.00 | -.0003 | -1.6767 | .0073 | .0881 | 1.6744 | .0035 | -1.7009 | .0071 | .0855 | 1.6988 |
| | 179.00 | -.0022 | -1.6843 | .0055 | .0316 | 1.6840 | .0048 | -1.7042 | .0034 | .0249 | 1.7040 |
| | 180.00 | -.0002 | -1.6891 | .0041 | .0002 | 1.6891 | .0048 | -1.7046 | .0013 | -.0048 | 1.7046 |
| | 181.00 | .0032 | -1.6930 | .0014 | -.0327 | 1.6926 | .0049 | -1.7060 | -.0011 | -.0347 | 1.7056 |
| | 183.00 | .0052 | -1.6938 | -.0005 | -.0939 | 1.6912 | .0055 | -1.7018 | -.0039 | -.0946 | 1.6992 |
| | 185.00 | .0026 | -1.6953 | -.0037 | -.1504 | 1.6887 | .0044 | -1.7025 | -.0069 | -.1528 | 1.6956 |
| 1211 | -5.00 | -.0944 | .7493 | -.0007 | -.0287 | .7547 | -.0936 | .7475 | .0008 | -.0280 | .7529 |
| | -3.00 | -.0562 | .7547 | -.0017 | -.0166 | .7566 | -.0553 | .7522 | -.0008 | -.0158 | .7541 |
| | -1.00 | -.0229 | .7603 | -.0020 | -.0096 | .7606 | -.0214 | .7548 | -.0016 | -.0082 | .7551 |
| | .00 | -.0046 | .7626 | -.0026 | -.0046 | .7626 | -.0038 | .7551 | -.0020 | -.0038 | .7551 |
| | 1.00 | .0138 | .7663 | -.0034 | .0004 | .7664 | .0144 | .7551 | -.0029 | .0012 | .7553 |
| | 3.00 | .0493 | .7675 | -.0045 | .0090 | .7690 | .0493 | .7600 | -.0035 | .0094 | .7616 |
| | 5.00 | .0826 | .7686 | -.0051 | .0153 | .7729 | .0848 | .7523 | -.0043 | .0189 | .7568 |
| | 10.00 | .1743 | .7709 | -.0071 | .0378 | .7895 | .1719 | .7567 | -.0057 | .0379 | .7751 |
| | 15.00 | .2624 | .7735 | -.0097 | .0533 | .8150 | .2608 | .7548 | -.0080 | .0565 | .7966 |
| | 20.00 | .3558 | .7715 | -.0125 | .0704 | .8467 | .3517 | .7472 | -.0110 | .0749 | .8224 |
| | 17.00 | .3155 | .7683 | -.0084 | .0771 | .8269 | .3007 | .7209 | -.0059 | .0768 | .7773 |
| | 20.00 | .3715 | .7576 | -.0107 | .0900 | .8390 | .3586 | .7260 | -.0081 | .0887 | .8048 |
| | 25.00 | .4712 | .7558 | -.0148 | .1077 | .8841 | .4532 | .7175 | -.0125 | .1075 | .8418 |
| | 30.00 | .5669 | .7415 | -.0202 | .1201 | .9257 | .5407 | .7038 | -.0169 | .1164 | .8799 |
| | 35.00 | .6561 | .7259 | -.0259 | .1210 | .9709 | .6344 | .6895 | -.0236 | .1242 | .9287 |
| | 40.00 | .7451 | .7107 | -.0323 | .1140 | 1.0233 | .7068 | .6714 | -.0255 | .1098 | .9686 |
| | 45.00 | .8203 | .6871 | -.0363 | .0941 | 1.0659 | .7921 | .6459 | -.0348 | .1034 | 1.0168 |
| | 50.00 | .8789 | .6595 | -.0393 | .0597 | 1.0972 | .8502 | .6192 | -.0390 | .0722 | 1.0493 |
| | 45.00 | .7935 | .6292 | -.0416 | .1162 | 1.0060 | .7648 | .6181 | -.0390 | .1037 | .9779 |
| | 50.00 | .8520 | .6007 | -.0447 | .0875 | 1.0388 | .8279 | .5959 | -.0409 | .0757 | 1.0172 |
| | 55.00 | .8870 | .5663 | -.0465 | .0449 | 1.0514 | .8659 | .5715 | -.0429 | .0286 | 1.0371 |
| | 60.00 | .9048 | .5369 | -.0481 | -.0126 | 1.0521 | .8898 | .5358 | -.0455 | -.0191 | 1.0385 |
| | 65.00 | .9125 | .4989 | -.0521 | -.0666 | 1.0378 | .8951 | .4990 | -.0490 | -.0739 | 1.0221 |
| | 70.00 | .9079 | .4521 | -.0545 | -.1143 | 1.0077 | .8914 | .4547 | -.0516 | -.1224 | .9931 |
| | 75.00 | .8999 | .3997 | -.0598 | -.1532 | .9727 | .8805 | .4033 | -.0562 | -.1617 | .9549 |
| | 79.00 | .8842 | .3550 | -.0634 | -.1798 | .9357 | .8641 | .3606 | -.0595 | -.1891 | .9170 |

TABLE I.- AERODYNAMIC CHARACTERISTICS OF MODELS - Continued

| Configuration | α, deg | $M_\infty = 3.5$ $C_N$ | $C_A$ | $C_m$ | $C_L$ | $C_D$ | $M_\infty = 4.2$ $C_N$ | $C_A$ | $C_m$ | $C_L$ | $C_D$ |
|---|---|---|---|---|---|---|---|---|---|---|---|
| 1211 | 75.00 | .8428 | .3824 | -.0618 | -.1513 | .9131 | .8574 | .3968 | -.0581 | -.1614 | .9309 |
| | 80.00 | .8251 | .3278 | -.0652 | -.1795 | .8695 | .8370 | .3404 | -.0612 | -.1899 | .8834 |
| | 85.00 | .8026 | .2688 | -.0676 | -.1978 | .8230 | .8111 | .2787 | -.0638 | -.2069 | .8323 |
| | 90.00 | .7787 | .1984 | -.0685 | -.1984 | .7787 | .7833 | .2133 | -.0650 | -.2133 | .7833 |
| | 95.00 | .7586 | .1223 | -.0689 | -.1879 | .7450 | .7528 | .1372 | -.0649 | -.2023 | .7379 |
| | 100.00 | .7280 | .0263 | -.0684 | -.1523 | .7123 | .7168 | .0495 | -.0650 | -.1732 | .6973 |
| | 105.00 | .6965 | -.0902 | -.0680 | -.0932 | .6961 | .6808 | -.0604 | -.0653 | -.1179 | .6732 |
| | 110.00 | .6639 | -.2361 | -.0664 | -.0052 | .7047 | .6429 | -.2014 | -.0647 | -.0306 | .6730 |
| | 107.00 | .6952 | -.1216 | -.0676 | -.0870 | .7004 | .6547 | -.1022 | -.0650 | -.0937 | .6560 |
| | 110.00 | .6724 | -.2158 | -.0667 | -.0272 | .7056 | .6300 | -.2009 | -.0641 | -.0267 | .6607 |
| | 115.00 | .6292 | -.4084 | -.0612 | .1042 | .7429 | .5743 | -.3777 | -.0592 | .0996 | .6801 |
| | 120.00 | .5764 | -.6002 | -.0502 | .2316 | .7993 | .5391 | -.5660 | -.0496 | .2206 | .7499 |
| | 125.00 | .5255 | -.7983 | -.0392 | .3525 | .8884 | .4824 | -.7668 | -.0378 | .3514 | .8350 |
| | 130.00 | .4611 | -.9975 | -.0197 | .4677 | .9944 | .4141 | -.9646 | -.0203 | .4727 | .9372 |
| | 135.00 | .3878 | -1.1744 | -.0022 | .5562 | 1.1046 | .3478 | -1.1547 | -.0021 | .5706 | 1.0624 |
| | 140.00 | .3177 | -1.3170 | .0138 | .6032 | 1.2131 | .2788 | -1.2843 | .0115 | .6119 | 1.1630 |
| | 135.00 | .3307 | -1.1959 | -.0096 | .6118 | 1.0794 | .3140 | -1.1631 | -.0097 | .6004 | 1.0444 |
| | 140.00 | .2520 | -1.3480 | .0061 | .6735 | 1.1946 | .2444 | -1.3138 | .0071 | .6573 | 1.1635 |
| | 145.00 | .1866 | -1.4466 | .0169 | .6768 | 1.2920 | .1823 | -1.4303 | .0201 | .6711 | 1.2762 |
| | 150.00 | .1348 | -1.5190 | .0176 | .6428 | 1.3829 | .1334 | -1.5091 | .0194 | .6391 | 1.3736 |
| | 155.00 | .0997 | -1.5810 | .0247 | .5778 | 1.4750 | .0973 | -1.5661 | .0263 | .5737 | 1.4605 |
| | 160.00 | .0648 | -1.6312 | .0247 | .4970 | 1.5550 | .0657 | -1.6211 | .0267 | .4927 | 1.5458 |
| | 165.00 | .0354 | -1.6762 | .0204 | .3996 | 1.6283 | .0389 | -1.6570 | .0230 | .3913 | 1.6106 |
| | 169.00 | .0149 | -1.6963 | .0139 | .3091 | 1.6679 | .0216 | -1.6717 | .0191 | .2978 | 1.6451 |
| | 165.00 | .0279 | -1.6195 | .0203 | .3923 | 1.5715 | .0321 | -1.6344 | .0212 | .3920 | 1.5870 |
| | 170.00 | .0034 | -1.6474 | .0141 | .2828 | 1.6230 | .0124 | -1.6609 | .0159 | .2762 | 1.6379 |
| | 175.00 | -.0097 | -1.6536 | .0088 | .1538 | 1.6465 | -.0005 | -1.6772 | .0089 | .1467 | 1.6708 |
| | 177.00 | -.0121 | -1.6595 | .0055 | .0990 | 1.6566 | -.0017 | -1.6831 | .0065 | .0898 | 1.6807 |
| | 179.00 | -.0127 | -1.6681 | .0035 | .0418 | 1.6676 | -.0015 | -1.7018 | .0029 | .0312 | 1.7015 |
| | 180.00 | -.0115 | -1.6860 | .0021 | .0115 | 1.6860 | .0032 | -1.7050 | .0002 | -.0032 | 1.7050 |
| | 181.00 | -.0029 | -1.6748 | -.0003 | -.0263 | 1.6746 | .0077 | -1.6887 | -.0017 | -.0372 | 1.6883 |
| | 183.00 | .0052 | -1.6890 | -.0039 | -.0936 | 1.6864 | .0078 | -1.6871 | -.0055 | -.0961 | 1.6844 |
| | 185.00 | .0038 | -1.6774 | -.0065 | -.1500 | 1.6707 | .0045 | -1.6995 | -.0134 | -.1526 | 1.6926 |
| 1212 | 45.00 | .7991 | .6343 | -.0411 | .1166 | 1.0136 | .7732 | .6263 | -.0380 | .1038 | .9896 |
| | 50.00 | .8645 | .6096 | -.0437 | .0887 | 1.0540 | .8380 | .6024 | -.0408 | .0772 | 1.0291 |
| | 55.00 | .8953 | .5758 | -.0454 | .0418 | 1.0637 | .8767 | .5741 | -.0440 | .0326 | 1.0474 |
| | 60.00 | .9136 | .5418 | -.0482 | -.0124 | 1.0621 | .8924 | .5358 | -.0455 | -.0178 | 1.0407 |
| | 65.00 | .9192 | .4989 | -.0502 | -.0637 | 1.0439 | .8985 | .4923 | -.0478 | -.0665 | 1.0224 |
| | 70.00 | .9165 | .4499 | -.0517 | -.1093 | 1.0151 | .8958 | .4452 | -.0496 | -.1119 | .9941 |
| | 75.00 | .9084 | .3927 | -.0521 | -.1442 | .9791 | .8935 | .3956 | -.0507 | -.1508 | .9655 |
| | 79.00 | .8990 | .3447 | -.0524 | -.1669 | .9483 | .8744 | .3456 | -.0513 | -.1725 | .9242 |
| | 75.00 | .8524 | .3750 | -.0565 | -.1416 | .9205 | .8617 | .3835 | -.0531 | -.1474 | .9316 |
| | 80.00 | .8355 | .3193 | -.0560 | -.1693 | .8782 | .8430 | .3254 | -.0526 | -.1741 | .8867 |
| | 85.00 | .8208 | .2525 | -.0541 | -.1800 | .8397 | .8260 | .2604 | -.0509 | -.1874 | .8456 |
| | 90.00 | .8081 | .1766 | -.0507 | -.1766 | .8081 | .8075 | .1888 | -.0486 | -.1888 | .8075 |
| | 95.00 | .7902 | .0902 | -.0450 | -.1588 | .7793 | .7825 | .1054 | -.0440 | -.1732 | .7703 |
| | 100.00 | .7736 | -.0104 | -.0366 | -.1241 | .7636 | .7590 | .0069 | -.0360 | -.1386 | .7463 |
| | 105.00 | .7526 | -.1178 | -.0263 | -.0810 | .7575 | .7369 | -.0992 | -.0261 | -.0949 | .7375 |
| | 110.00 | .7316 | -.2411 | -.0147 | -.0236 | .7700 | .7104 | -.2230 | -.0138 | -.0334 | .7439 |
| | 107.00 | .7459 | -.1586 | -.0195 | -.0664 | .7597 | .7067 | -.1456 | -.0196 | -.0674 | .7184 |
| | 110.00 | .7293 | -.2320 | -.0118 | -.0314 | .7646 | .6872 | -.2215 | -.0110 | -.0269 | .7216 |
| | 115.00 | .6986 | -.3663 | -.0011 | .0368 | .7879 | .6567 | -.3498 | .0016 | .0395 | .7430 |
| | 120.00 | .6471 | -.4981 | .0120 | .1078 | .8095 | .6015 | -.4791 | .0136 | .1141 | .7605 |
| | 125.00 | .5957 | -.6293 | .0230 | .1738 | .8490 | .5469 | -.6135 | .0257 | .1888 | .7999 |
| | 130.00 | .5169 | -.7688 | .0341 | .2566 | .8902 | .4715 | -.7526 | .0367 | .2734 | .8450 |
| | 135.00 | .4360 | -.9099 | .0443 | .3351 | .9517 | .3974 | -.8878 | .0451 | .3468 | .9088 |
| | 140.00 | .3628 | -1.0374 | .0501 | .3889 | 1.0279 | .3275 | -1.0113 | .0510 | .3992 | .9852 |
| | 135.00 | .3696 | -.9223 | .0398 | .3909 | .9135 | .3610 | -.8742 | .0428 | .3629 | .8735 |
| | 140.00 | .2982 | -1.0603 | .0437 | .4532 | 1.0039 | .2926 | -1.0101 | .0479 | .4252 | .9619 |
| | 145.00 | .2326 | -1.1799 | .0439 | .4863 | 1.0999 | .2314 | -1.1376 | .0478 | .4629 | 1.0646 |
| | 150.00 | .1762 | -1.2938 | .0385 | .4943 | 1.2086 | .1811 | -1.2512 | .0448 | .4688 | 1.1742 |
| | 155.00 | .1342 | -1.3823 | .0376 | .4626 | 1.3095 | .1404 | -1.3514 | .0415 | .4439 | 1.2841 |
| | 160.00 | .0976 | -1.4597 | .0322 | .4075 | 1.4051 | .1041 | -1.4390 | .0360 | .3944 | 1.3878 |
| | 165.00 | .0635 | -1.5264 | .0257 | .3338 | 1.4908 | .0699 | -1.5068 | .0284 | .3225 | 1.4736 |
| | 169.00 | .0371 | -1.5628 | .0200 | .2618 | 1.5412 | .0443 | -1.5341 | .0221 | .2492 | 1.5144 |
| | 165.00 | .0559 | -1.4752 | .0238 | .3278 | 1.4394 | .0617 | -1.4860 | .0262 | .3250 | 1.4514 |
| | 170.00 | .0280 | -1.5221 | .0168 | .2367 | 1.5039 | .0347 | -1.5346 | .0192 | .2323 | 1.5173 |
| | 175.00 | .0071 | -1.5501 | .0099 | .1280 | 1.5448 | .0197 | -1.5648 | .0107 | .1168 | 1.5606 |
| | 177.00 | .0018 | -1.5613 | .0065 | .0799 | 1.5593 | .0146 | -1.5729 | .0055 | .0677 | 1.5715 |
| | 179.00 | .0054 | -1.5725 | .0021 | .0220 | 1.5724 | .0078 | -1.5764 | .0023 | .0197 | 1.5763 |
| | 180.00 | .0021 | -1.5785 | .0005 | -.0021 | 1.5785 | .0038 | -1.5890 | .0004 | -.0038 | 1.5890 |
| | 181.00 | -.0012 | -1.5695 | -.0011 | -.0262 | 1.5693 | .0004 | -1.5809 | -.0016 | -.0280 | 1.5807 |
| | 183.00 | -.0078 | -1.5721 | -.0040 | -.0745 | 1.5703 | -.0067 | -1.5903 | -.0051 | -.0765 | 1.5885 |
| | 185.00 | -.0076 | -1.5729 | -.0081 | -.1295 | 1.5676 | -.0146 | -1.5751 | -.0089 | -.1228 | 1.5704 |
| 1213 | 45.00 | .8070 | .6369 | -.0431 | .1202 | 1.0210 | .7717 | .6233 | -.0400 | .1050 | .9864 |
| | 50.00 | .8594 | .6030 | -.0448 | .0905 | 1.0459 | .8324 | .5969 | -.0424 | .0779 | 1.0214 |
| | 55.00 | .8928 | .5681 | -.0465 | .0467 | 1.0572 | .8725 | .5696 | -.0445 | .0338 | 1.0414 |
| | 60.00 | .9141 | .5354 | -.0494 | -.0066 | 1.0593 | .8964 | .5353 | -.0472 | -.0154 | 1.0440 |
| | 65.00 | .9160 | .4988 | -.0511 | -.0650 | 1.0410 | .9023 | .4967 | -.0494 | -.0689 | 1.0277 |
| | 70.00 | .9151 | .4517 | -.0558 | -.1115 | 1.0144 | .8929 | .4466 | -.0533 | -.1143 | .9917 |
| | 75.00 | .9120 | .3938 | -.0648 | -.1444 | .9828 | .8967 | .3961 | -.0609 | -.1505 | .9686 |
| | 79.00 | .9040 | .3408 | -.0726 | -.1620 | .9524 | .8812 | .3479 | -.0668 | -.1734 | .9314 |

TABLE I.- AERODYNAMIC CHARACTERISTICS OF MODELS - Continued

| Configuration | α, deg | $M_\infty = 3.5$ $C_N$ | $C_A$ | $C_m$ | $C_L$ | $C_D$ | $M_\infty = 4.2$ $C_N$ | $C_A$ | $C_m$ | $C_L$ | $C_D$ |
|---|---|---|---|---|---|---|---|---|---|---|---|
| 1213 | 75.00 | .8524 | .3799 | -.0683 | -.1464 | .9217 | .8615 | .3902 | -.0642 | -.1539 | .9331 |
| | 80.00 | .8413 | .3196 | -.0772 | -.1686 | .8840 | .8471 | .3323 | -.0718 | -.1802 | .8919 |
| | 85.00 | .8247 | .2515 | -.0873 | -.1786 | .8435 | .8276 | .2644 | -.0804 | -.1913 | .8475 |
| | 90.00 | .8042 | .1752 | -.0954 | -.1752 | .8042 | .8048 | .1934 | -.0878 | -.1934 | .8048 |
| | 95.00 | .7858 | .0917 | -.1031 | -.1599 | .7748 | .7759 | .1148 | -.0944 | -.1820 | .7630 |
| | 100.00 | .7624 | -.0075 | -.1142 | -.1250 | .7521 | .7464 | .0219 | -.1048 | -.1512 | .7313 |
| | 105.00 | .7440 | -.1382 | -.1306 | -.0591 | .7545 | .7293 | -.1058 | -.1245 | -.0866 | .7319 |
| | 110.00 | .7199 | -.3166 | -.1487 | .0513 | .7848 | .7086 | -.2936 | -.1481 | .0335 | .7663 |
| | 107.00 | .7440 | -.1993 | -.1397 | -.0269 | .7698 | .7010 | -.1693 | -.1334 | -.0431 | .7199 |
| | 110.00 | .7274 | -.3081 | -.1497 | .0407 | .7889 | .6860 | -.2911 | -.1448 | .0389 | .7442 |
| | 115.00 | .6892 | -.5220 | -.1539 | .1818 | .8452 | .6657 | -.5179 | -.1680 | .1881 | .8222 |
| | 120.00 | .6677 | -.8081 | -.1788 | .3659 | .9823 | .6533 | -.8211 | -.2104 | .3844 | .9764 |
| | 125.00 | .6277 | -1.0665 | -.1785 | .5136 | 1.1259 | .5854 | -1.0346 | -.1851 | .5117 | 1.0729 |
| | 130.00 | .5424 | -1.2778 | -.1340 | .6302 | 1.2369 | .5037 | -1.2352 | -.1427 | .6224 | 1.1799 |
| | 135.00 | .4419 | -1.4250 | -.0705 | .6951 | 1.3201 | .4067 | -1.3873 | -.0853 | .6934 | 1.2686 |
| | 140.00 | .3427 | -1.4994 | -.0106 | .7013 | 1.3689 | .3059 | -1.4726 | -.0236 | .7123 | 1.3247 |
| | 135.00 | .3736 | -1.4439 | -.0700 | .7568 | 1.2852 | .3786 | -1.4129 | -.0952 | .7314 | 1.2668 |
| | 140.00 | .2711 | -1.4914 | -.0117 | .7510 | 1.3168 | .2728 | -1.4974 | -.0290 | .7535 | 1.3225 |
| | 145.00 | .1871 | -1.5446 | .0128 | .7327 | 1.3726 | .1890 | -1.5355 | .0112 | .7259 | 1.3662 |
| | 150.00 | .1308 | -1.5862 | .0223 | .6798 | 1.4391 | .1267 | -1.5780 | .0235 | .6793 | 1.4300 |
| | 155.00 | .0888 | -1.6290 | .0275 | .6079 | 1.5139 | .0879 | -1.6202 | .0292 | .6050 | 1.5055 |
| | 160.00 | .0552 | -1.6752 | .0314 | .5211 | 1.5931 | .0546 | -1.6587 | .0316 | .5160 | 1.5774 |
| | 165.00 | .0284 | -1.7119 | .0224 | .4157 | 1.6610 | .0280 | -1.6872 | .0266 | .4097 | 1.6369 |
| | 169.00 | .0084 | -1.7299 | .0144 | .3219 | 1.6997 | .0097 | -1.6986 | .0190 | .3146 | 1.6693 |
| | 165.00 | .0187 | -1.6480 | .0252 | .4084 | 1.5967 | .0247 | -1.6616 | .0257 | .4062 | 1.6114 |
| | 170.00 | -.0040 | -1.6683 | .0182 | .2936 | 1.6423 | .0067 | -1.6854 | .0190 | .2861 | 1.6610 |
| | 175.00 | -.0138 | -1.6849 | .0119 | .1606 | 1.6773 | -.0034 | -1.6996 | .0107 | .1515 | 1.6928 |
| | 177.00 | -.0157 | -1.6907 | .0091 | .1042 | 1.6876 | -.0039 | -1.7070 | .0070 | .0932 | 1.7045 |
| | 179.00 | -.0124 | -1.6965 | .0063 | .0420 | 1.6960 | -.0021 | -1.7106 | .0035 | .0319 | 1.7103 |
| | 180.00 | -.0084 | -1.7019 | .0046 | .0084 | 1.7019 | .0043 | -1.7215 | .0014 | -.0043 | 1.7215 |
| | 181.00 | -.0021 | -1.7036 | .0024 | -.0276 | 1.7033 | .0073 | -1.7202 | -.0013 | -.0373 | 1.7198 |
| | 183.00 | .0053 | -1.7041 | -.0010 | -.0945 | 1.7015 | .0132 | -1.7199 | -.0075 | -.1032 | 1.7168 |
| | 185.00 | .0087 | -1.7105 | -.0043 | -.1578 | 1.7032 | .0121 | -1.7196 | -.0115 | -.1620 | 1.7120 |
| 2211 | -5.00 | -.0806 | .7741 | -.0011 | -.0128 | .7782 | -.0766 | .7782 | -.0008 | -.0085 | .7819 |
| | -3.00 | -.0461 | .7782 | -.0012 | -.0053 | .7795 | -.0435 | .7822 | -.0015 | -.0025 | .7834 |
| | -1.00 | -.0127 | .7833 | -.0016 | .0010 | .7834 | -.0093 | .7851 | -.0015 | .0044 | .7852 |
| | .00 | .0054 | .7869 | -.0015 | .0054 | .7869 | .0067 | .7858 | -.0018 | .0067 | .7858 |
| | 1.00 | .0195 | .7892 | -.0016 | .0057 | .7894 | .0221 | .7865 | -.0021 | .0084 | .7868 |
| | 3.00 | .0549 | .7908 | -.0021 | .0134 | .7926 | .0533 | .7870 | -.0021 | .0120 | .7887 |
| | 5.00 | .0867 | .7927 | -.0023 | .0173 | .7973 | .0853 | .7872 | -.0021 | .0164 | .7916 |
| | 10.00 | .1739 | .7991 | -.0028 | .0325 | .8172 | .1660 | .7880 | -.0026 | .0267 | .8048 |
| | 15.00 | .2609 | .8065 | -.0040 | .0433 | .8465 | .2503 | .7901 | -.0028 | .0373 | .8280 |
| | 20.00 | .3573 | .8132 | -.0050 | .0577 | .8864 | .3409 | .7893 | -.0044 | .0503 | .8583 |
| | 17.00 | .3016 | .8100 | -.0020 | .0516 | .8628 | .2866 | .7766 | -.0016 | .0470 | .8265 |
| | 20.00 | .3624 | .8082 | -.0046 | .0641 | .8834 | .3431 | .7778 | -.0021 | .0564 | .8482 |
| | 25.00 | .4705 | .8084 | -.0061 | .0848 | .9315 | .4475 | .7798 | -.0052 | .0760 | .8958 |
| | 30.00 | .5772 | .8101 | -.0081 | .0948 | .9902 | .5488 | .7737 | -.0070 | .0884 | .9444 |
| | 35.00 | .6817 | .8006 | -.0080 | .0992 | 1.0468 | .6524 | .7641 | -.0076 | .0961 | 1.0001 |
| | 40.00 | .7816 | .7912 | -.0069 | .0901 | 1.1085 | .7479 | .7463 | -.0079 | .0932 | 1.0524 |
| | 45.00 | .8657 | .7556 | -.0077 | .0778 | 1.1464 | .8303 | .7108 | -.0075 | .0845 | 1.0897 |
| | 50.00 | .9229 | .7062 | -.0046 | .0522 | 1.1609 | .8899 | .6591 | -.0052 | .0671 | 1.1054 |
| | 45.00 | .8450 | .6838 | -.0137 | .1140 | 1.0810 | .8097 | .6783 | -.0126 | .0929 | 1.0521 |
| | 50.00 | .9070 | .6345 | -.0117 | .0969 | 1.1027 | .8805 | .6348 | -.0110 | .0797 | 1.0825 |
| | 55.00 | .9403 | .5775 | -.0098 | .0662 | 1.1014 | .9174 | .5765 | -.0087 | .0540 | 1.0822 |
| | 60.00 | .9616 | .5270 | -.0109 | .0244 | 1.0963 | .9519 | .5295 | -.0091 | .0174 | 1.0892 |
| | 65.00 | .9673 | .4791 | -.0112 | -.0254 | 1.0792 | .9606 | .4780 | -.0103 | -.0272 | 1.0726 |
| | 70.00 | .9711 | .4275 | -.0146 | -.0696 | 1.0587 | .9632 | .4291 | -.0130 | -.0738 | 1.0519 |
| | 75.00 | .9690 | .3669 | -.0199 | -.1036 | 1.0310 | .9584 | .3750 | -.0171 | -.1141 | 1.0228 |
| | 79.00 | .9604 | .3197 | -.0236 | -.1305 | 1.0038 | .9406 | .3300 | -.0205 | -.1444 | .9863 |
| | 75.00 | .9239 | .3555 | -.0229 | -.1043 | .9844 | .9333 | .3656 | -.0182 | -.1115 | .9961 |
| | 80.00 | .9127 | .3004 | -.0270 | -.1373 | .9510 | .9202 | .3080 | -.0230 | -.1435 | .9597 |
| | 85.00 | .8968 | .2360 | -.0316 | -.1569 | .9140 | .9043 | .2462 | -.0273 | -.1665 | .9224 |
| | 90.00 | .8854 | .1676 | -.0342 | -.1676 | .8854 | .8861 | .1826 | -.0299 | -.1826 | .8861 |
| | 95.00 | .8658 | .0928 | -.0354 | -.1679 | .8544 | .8601 | .1133 | -.0313 | -.1879 | .8469 |
| | 100.00 | .8432 | .0029 | -.0360 | -.1493 | .8299 | .8302 | .0277 | -.0319 | -.1715 | .8128 |
| | 105.00 | .8205 | -.1112 | -.0361 | -.1050 | .8213 | .8040 | -.0750 | -.0343 | -.1357 | .7960 |
| | 110.00 | .7896 | -.2560 | -.0355 | -.0295 | .8296 | .7646 | -.2250 | -.0349 | -.0501 | .7955 |
| | 107.00 | .8073 | -.1389 | -.0367 | -.1032 | .8126 | .7596 | -.1157 | -.0342 | -.1115 | .7602 |
| | 110.00 | .7895 | -.2260 | -.0355 | -.0576 | .8192 | .7393 | -.2125 | -.0338 | -.0532 | .7674 |
| | 115.00 | .7420 | -.4048 | -.0312 | .0533 | .8436 | .6903 | -.3827 | -.0291 | .0551 | .7873 |
| | 120.00 | .6872 | -.6039 | -.0234 | .1794 | .8971 | .6382 | -.5657 | -.0237 | .1708 | .8356 |
| | 125.00 | .6262 | -.7943 | -.0143 | .2915 | .9686 | .5748 | -.7651 | -.0149 | .2970 | .9096 |
| | 130.00 | .5494 | -.9935 | -.0002 | .4080 | 1.0595 | .4993 | -.9654 | -.0010 | .4186 | 1.0030 |
| | 135.00 | .4646 | -1.1696 | .0162 | .4985 | 1.1555 | .4162 | -1.1456 | .0138 | .5158 | 1.1044 |
| | 140.00 | .3846 | -1.3170 | .0297 | .5520 | 1.2561 | .3363 | -1.2888 | .0252 | .5708 | 1.2035 |

TABLE I.- AERODYNAMIC CHARACTERISTICS OF MODELS - Continued

| Configuration | α, deg | $M_\infty = 3.5$ $C_N$ | $C_A$ | $C_m$ | $C_L$ | $C_D$ | $M_\infty = 4.2$ $C_N$ | $C_A$ | $C_m$ | $C_L$ | $C_D$ |
|---|---|---|---|---|---|---|---|---|---|---|---|
| 2212 | 45.00 | .8493 | .6911 | -.0132 | .1118 | 1.0892 | .7989 | .6806 | -.0109 | .0836 | 1.0462 |
| | 50.00 | .9097 | .6398 | -.0123 | .0946 | 1.1082 | .8676 | .6397 | -.0083 | .0677 | 1.0758 |
| | 55.00 | .9400 | .5848 | -.0092 | .0602 | 1.1054 | .9138 | .5858 | -.0068 | .0442 | 1.0845 |
| | 60.00 | .9590 | .5293 | -.0108 | .0211 | 1.0952 | .9408 | .5372 | -.0062 | .0052 | 1.0834 |
| | 65.00 | .9662 | .4766 | -.0119 | -.0236 | 1.0771 | .9503 | .4843 | -.0074 | -.0373 | 1.0660 |
| | 70.00 | .9704 | .4209 | -.0120 | -.0636 | 1.0559 | .9525 | .4350 | -.0076 | -.0830 | 1.0439 |
| | 75.00 | .9694 | .3644 | -.0140 | -.1011 | 1.0307 | .9477 | .3789 | -.0103 | -.1207 | 1.0135 |
| | 79.00 | .9661 | .3079 | -.0151 | -.1179 | 1.0072 | .9441 | .3303 | -.0123 | -.1441 | .9898 |
| | 75.00 | .9247 | .3578 | -.0145 | -.1063 | .9858 | .9294 | .3582 | -.0127 | -.1055 | .9904 |
| | 80.00 | .9091 | .2991 | -.0148 | -.1367 | .9472 | .9218 | .2991 | -.0134 | -.1345 | .9597 |
| | 85.00 | .9102 | .2313 | -.0149 | -.1511 | .9269 | .9109 | .2328 | -.0133 | -.1525 | .9277 |
| | 90.00 | .8967 | .1559 | -.0128 | -.1559 | .8967 | .8997 | .1654 | -.0124 | -.1654 | .8997 |
| | 95.00 | .8870 | .0690 | -.0090 | -.1460 | .8776 | .8828 | .0828 | -.0094 | -.1594 | .8722 |
| | 100.00 | .8789 | -.0271 | -.0015 | -.1259 | .8702 | .8663 | -.0117 | -.0028 | -.1389 | .8551 |
| | 105.00 | .8730 | -.1360 | .0081 | -.0945 | .8785 | .8488 | -.1152 | .0070 | -.1084 | .8497 |
| | 110.00 | .8530 | -.2525 | .0187 | -.0544 | .8880 | .8236 | -.2327 | .0179 | -.0630 | .8535 |
| | 107.00 | .8625 | -.1723 | .0111 | -.0874 | .8752 | .8189 | -.1551 | .0106 | -.0911 | .8284 |
| | 110.00 | .8409 | -.2476 | .0179 | -.0549 | .8749 | .8035 | -.2300 | .0181 | -.0587 | .8337 |
| | 115.00 | .8020 | -.3714 | .0281 | -.0023 | .8839 | .7598 | -.3570 | .0289 | .0025 | .8395 |
| | 120.00 | .7560 | -.5035 | .0383 | .0580 | .9065 | .7028 | -.4831 | .0388 | .0670 | .8502 |
| | 125.00 | .6880 | -.6312 | .0462 | .1224 | .9256 | .6332 | -.6102 | .0473 | .1366 | .8687 |
| | 130.00 | .5983 | -.7658 | .0546 | .2020 | .9505 | .5519 | -.7530 | .0564 | .2220 | .9068 |
| | 135.00 | .5124 | -.9118 | .0615 | .2824 | 1.0070 | .4641 | -.8877 | .0617 | .2995 | .9559 |
| | 140.00 | .4226 | -1.0340 | .0645 | .3409 | 1.0637 | .3821 | -1.0121 | .0636 | .3579 | 1.0209 |
| 2213 | 45.00 | .8517 | .6892 | -.0161 | .1149 | 1.0895 | .8032 | .6778 | -.0137 | .0887 | 1.0473 |
| | 50.00 | .9088 | .6423 | -.0126 | .0922 | 1.1091 | .8739 | .6323 | -.0120 | .0773 | 1.0758 |
| | 55.00 | .9423 | .5861 | -.0112 | .0604 | 1.1081 | .9192 | .5794 | -.0100 | .0526 | 1.0853 |
| | 60.00 | .9634 | .5365 | -.0123 | .0171 | 1.1026 | .9479 | .5285 | -.0099 | .0163 | 1.0852 |
| | 65.00 | .9706 | .4829 | -.0139 | -.0275 | 1.0838 | .9596 | .4778 | -.0113 | -.0275 | 1.0716 |
| | 70.00 | .9751 | .4283 | -.0183 | -.0690 | 1.0628 | .9615 | .4281 | -.0143 | -.0734 | 1.0499 |
| | 75.00 | .9830 | .3708 | -.0277 | -.1038 | 1.0455 | .9624 | .3725 | -.0222 | -.1107 | 1.0260 |
| | 79.00 | .9786 | .3149 | -.0358 | -.1224 | 1.0207 | .9529 | .3243 | -.0288 | -.1365 | .9973 |
| | 75.00 | .9255 | .3628 | -.0263 | -.1109 | .9879 | .9309 | .3613 | -.0238 | -.1081 | .9927 |
| | 80.00 | .9225 | .3022 | -.0365 | -.1374 | .9610 | .9260 | .3013 | -.0331 | -.1359 | .9642 |
| | 85.00 | .9136 | .2322 | -.0487 | -.1517 | .9303 | .9141 | .2346 | -.0433 | -.1540 | .9310 |
| | 90.00 | .9059 | .1569 | -.0582 | -.1569 | .9059 | .9000 | .1679 | -.0522 | -.1679 | .9000 |
| | 95.00 | .8916 | .0762 | -.0677 | -.1536 | .8816 | .8764 | .0944 | -.0601 | -.1704 | .8649 |
| | 100.00 | .8733 | -.0206 | -.0795 | -.1313 | .8636 | .8601 | .0097 | -.0712 | -.1590 | .8453 |
| | 105.00 | .8608 | -.1493 | -.0975 | -.0786 | .8701 | .8396 | -.1163 | -.0918 | -.1050 | .8411 |
| | 110.00 | .8450 | -.3255 | -.1176 | .0169 | .9053 | .8209 | -.3009 | -.1184 | .0020 | .8743 |
| | 107.00 | .8537 | -.2129 | -.1084 | -.0460 | .8786 | .8128 | -.1770 | -.1023 | -.0683 | .8290 |
| | 110.00 | .8405 | -.3155 | -.1197 | .0090 | .8977 | .7985 | -.2994 | -.1163 | .0082 | .8527 |
| | 115.00 | .7992 | -.5315 | -.1286 | .1439 | .9489 | .7693 | -.5218 | -.1394 | .1478 | .9177 |
| | 120.00 | .7669 | -.8054 | -.1527 | .3140 | 1.0669 | .7458 | -.8121 | -.1811 | .3304 | 1.0520 |
| | 125.00 | .7150 | -1.0594 | -.1526 | .4577 | 1.1934 | .6754 | -1.0376 | -.1633 | .4626 | 1.1484 |
| | 130.00 | .6214 | -1.2692 | -.1129 | .5729 | 1.2918 | .5812 | -1.2335 | -.1235 | .5713 | 1.2381 |
| | 135.00 | .5134 | -1.4157 | -.0539 | .6381 | 1.3641 | .4766 | -1.3985 | -.0702 | .6519 | 1.3259 |
| | 140.00 | .4032 | -1.4912 | .0047 | .6496 | 1.4015 | .3608 | -1.4681 | -.0100 | .6673 | 1.3565 |
| 3211 | -5.00 | -.0775 | .8230 | -.0023 | -.0055 | .8267 | -.0758 | .8292 | -.0006 | -.0032 | .8326 |
| | -3.00 | -.0458 | .8199 | -.0027 | -.0028 | .8212 | -.0440 | .8327 | -.0012 | -.0003 | .8339 |
| | -1.00 | -.0117 | .8248 | -.0025 | .0027 | .8249 | -.0159 | .8405 | -.0015 | -.0012 | .8407 |
| | .00 | .0013 | .8263 | -.0026 | .0013 | .8263 | .0005 | .8413 | -.0016 | .0005 | .8413 |
| | 1.00 | .0197 | .8295 | -.0028 | .0052 | .8297 | .0147 | .8413 | -.0017 | .0000 | .8415 |
| | 3.00 | .0503 | .8320 | -.0034 | .0067 | .8335 | .0453 | .8416 | -.0022 | .0012 | .8428 |
| | 5.00 | .0818 | .8341 | -.0031 | .0088 | .8380 | .0756 | .8418 | -.0022 | .0019 | .8452 |
| | 10.00 | .1627 | .8425 | -.0030 | .0139 | .8580 | .1521 | .8448 | -.0021 | .0031 | .8584 |
| | 15.00 | .2492 | .8580 | -.0037 | .0186 | .8933 | .2349 | .8502 | -.0029 | .0069 | .8820 |
| | 20.00 | .3453 | .8670 | -.0040 | .0280 | .9328 | .3283 | .8567 | -.0037 | .0155 | .9173 |
| | 17.00 | .2901 | .8695 | .0051 | .0232 | .9163 | .2665 | .8272 | .0053 | .0131 | .8690 |
| | 20.00 | .3536 | .8686 | .0038 | .0352 | .9371 | .3293 | .8390 | .0041 | .0224 | .9010 |
| | 25.00 | .4678 | .8780 | .0038 | .0529 | .9934 | .4399 | .8452 | .0034 | .0415 | .9519 |
| | 30.00 | .5840 | .8877 | .0049 | .0619 | 1.0608 | .5460 | .8479 | .0043 | .0488 | 1.0073 |
| | 35.00 | .6923 | .8787 | .0083 | .0631 | 1.1169 | .6549 | .8418 | .0079 | .0537 | 1.0652 |
| | 40.00 | .7922 | .8655 | .0135 | .0506 | 1.1722 | .7530 | .8218 | .0129 | .0486 | 1.1135 |
| | 45.00 | .8775 | .8294 | .0171 | .0340 | 1.2070 | .8423 | .7784 | .0162 | .0452 | 1.1460 |
| | 50.00 | .9396 | .7715 | .0232 | .0130 | 1.2157 | .8999 | .7151 | .0221 | .0306 | 1.1491 |
| | 45.00 | .8674 | .7421 | .0017 | .0886 | 1.1380 | .8220 | .7342 | .0036 | .0620 | 1.1004 |
| | 50.00 | .9240 | .6861 | .0072 | .0683 | 1.1488 | .8904 | .6771 | .0080 | .0536 | 1.1173 |
| | 55.00 | .9539 | .6174 | .0101 | .0414 | 1.1355 | .9333 | .6065 | .0125 | .0385 | 1.1124 |
| | 60.00 | .9685 | .5466 | .0104 | .0109 | 1.1120 | .9559 | .5416 | .0127 | .0090 | 1.0986 |
| | 65.00 | .9942 | .4833 | .0099 | -.0178 | 1.1054 | .9752 | .4762 | .0115 | -.0195 | 1.0851 |
| | 70.00 | .9969 | .4162 | .0060 | -.0501 | 1.0791 | .9842 | .4186 | .0087 | -.0568 | 1.0680 |
| | 75.00 | .9976 | .3582 | .0015 | -.0878 | 1.0563 | .9832 | .3634 | .0046 | -.0965 | 1.0438 |
| | 79.00 | .9922 | .3079 | -.0028 | -.1129 | 1.0328 | .9811 | .3203 | .0002 | -.1272 | 1.0242 |
| | 75.00 | .9489 | .3622 | .0010 | -.1043 | 1.0103 | .9551 | .3559 | .0023 | -.0966 | 1.0147 |
| | 80.00 | .9433 | .3033 | -.0044 | -.1349 | .9817 | .9472 | .2966 | -.0021 | -.1276 | .9843 |
| | 85.00 | .9343 | .2413 | -.0088 | -.1590 | .9517 | .9368 | .2369 | -.0064 | -.1543 | .9538 |
| | 90.00 | .9257 | .1731 | -.0116 | -.1731 | .9257 | .9242 | .1738 | -.0094 | -.1738 | .9242 |
| | 95.00 | .9151 | .0943 | -.0129 | -.1737 | .9034 | .9061 | .1081 | -.0101 | -.1867 | .8933 |
| | 100.00 | .8958 | .0084 | -.0129 | -.1639 | .8807 | .8776 | .0275 | -.0114 | -.1795 | .8595 |
| | 105.00 | .8727 | -.1035 | -.0137 | -.1259 | .8698 | .8535 | -.0735 | -.0128 | -.1499 | .8434 |
| | 110.00 | .8436 | -.2442 | -.0134 | -.0590 | .8762 | .8166 | -.2154 | -.0133 | -.0769 | .8411 |

TABLE I.- AERODYNAMIC CHARACTERISTICS OF MODELS - Continued

| Configuration | α, deg | $M_\infty = 3.5$ $C_N$ | $C_A$ | $C_m$ | $C_L$ | $C_D$ | $M_\infty = 4.2$ $C_N$ | $C_A$ | $C_m$ | $C_L$ | $C_D$ |
|---|---|---|---|---|---|---|---|---|---|---|---|
| 3211 | 107.00 | .8680 | -.1404 | -.0145 | -.1195 | .8711 | .8198 | -.1150 | -.0125 | -.1297 | .8176 |
| | 110.00 | .8438 | -.2342 | -.0135 | -.0685 | .8730 | .7954 | -.2086 | -.0128 | -.0760 | .8187 |
| | 115.00 | .7922 | -.4010 | -.0101 | .0286 | .8875 | .7440 | -.3733 | -.0101 | .0239 | .8321 |
| | 120.00 | .7309 | -.5937 | -.0047 | .1487 | .9299 | .6820 | -.5647 | -.0058 | .1480 | .8730 |
| | 125.00 | .6662 | -.7881 | .0024 | .2635 | .9977 | .6137 | -.7569 | .0001 | .2680 | .9368 |
| | 130.00 | .5862 | -.9906 | .0150 | .3820 | 1.0858 | .5322 | -.9544 | .0114 | .3890 | 1.0212 |
| | 135.00 | .5016 | -1.1727 | .0291 | .4745 | 1.1839 | .4472 | -1.1326 | .0248 | .4847 | 1.1171 |
| | 140.00 | .4100 | -1.2999 | .0410 | .5215 | 1.2593 | .3613 | -1.2752 | .0350 | .5429 | 1.2091 |
| 3212 | 45.00 | .8473 | .7356 | .0032 | .0789 | 1.1193 | .8170 | .7353 | .0032 | .0578 | 1.0976 |
| | 50.00 | .9168 | .6936 | .0082 | .0580 | 1.1481 | .8845 | .6770 | .0084 | .0499 | 1.1128 |
| | 55.00 | .9482 | .6161 | .0101 | .0392 | 1.1301 | .9262 | .6082 | .0118 | .0330 | 1.1076 |
| | 60.00 | .9740 | .5508 | .0110 | .0100 | 1.1789 | .9489 | .5359 | .0123 | .0104 | 1.0898 |
| | 65.00 | .9824 | .4804 | .0108 | -.0202 | 1.0934 | .9695 | .4683 | .0115 | -.0147 | 1.0766 |
| | 70.00 | .9925 | .4128 | .0084 | -.0484 | 1.0738 | .9795 | .4105 | .0107 | -.0507 | 1.0608 |
| | 75.00 | .9937 | .3573 | .0087 | -.0879 | 1.0523 | .9776 | .3539 | .0091 | -.0888 | 1.0359 |
| | 79.00 | .9969 | .2993 | .0070 | -.1036 | 1.0357 | .9707 | .3045 | .0080 | -.1137 | 1.0110 |
| | 75.00 | .9448 | .3475 | .0063 | -.0912 | 1.0025 | .9601 | .3453 | .0077 | -.0850 | 1.0168 |
| | 80.00 | .9415 | .2839 | .0055 | -.1161 | .9765 | .9557 | .2822 | .0071 | -.1119 | .9902 |
| | 85.00 | .9413 | .2162 | .0052 | -.1334 | .9565 | .9525 | .2176 | .0065 | -.1338 | .9679 |
| | 90.00 | .9415 | .1409 | .0075 | -.1409 | .9415 | .9366 | .1487 | .0075 | -.1487 | .9366 |
| | 95.00 | .9366 | .0573 | .0115 | -.1387 | .9280 | .9325 | .0710 | .0112 | -.1520 | .9228 |
| | 100.00 | .9257 | -.0364 | .0192 | -.1249 | .9179 | .9189 | -.0176 | .0174 | -.1423 | .9080 |
| | 105.00 | .9256 | -.1429 | .0289 | -.1016 | .9311 | .9040 | -.1209 | .0272 | -.1172 | .9045 |
| | 110.00 | .9055 | -.2581 | .0388 | -.0672 | .9392 | .8781 | -.2379 | .0377 | -.0767 | .9065 |
| | 107.00 | .9209 | -.1697 | .0325 | -.1069 | .9303 | .8774 | -.1522 | .0309 | -.1110 | .8836 |
| | 110.00 | .9039 | -.2434 | .0397 | -.0805 | .9326 | .8609 | -.2252 | .0378 | -.0828 | .8860 |
| | 115.00 | .8645 | -.3622 | .0478 | -.0371 | .9366 | .8137 | -.3472 | .0473 | -.0292 | .8842 |
| | 120.00 | .8041 | -.4921 | .0558 | .0241 | .9425 | .7495 | -.4733 | .0563 | .0351 | .8858 |
| | 125.00 | .7341 | -.6218 | .0633 | .0882 | .9580 | .6767 | -.6008 | .0622 | .1040 | .8989 |
| | 130.00 | .6422 | -.7531 | .0695 | .1641 | .9761 | .5862 | -.7340 | .0691 | .1855 | .9209 |
| | 135.00 | .5442 | -.8960 | .0738 | .2488 | 1.0184 | .4922 | -.8703 | .0725 | .2674 | .9634 |
| | 140.00 | .4518 | -1.0218 | .0754 | .3107 | 1.0731 | .4036 | -.9921 | .0779 | .3285 | 1.0194 |
| 3213 | 45.00 | .8679 | .7393 | .0004 | .0909 | 1.1365 | .8209 | .7316 | .0018 | .0632 | 1.0978 |
| | 50.00 | .9157 | .6821 | .0055 | .0661 | 1.1399 | .8889 | .6736 | .0061 | .0554 | 1.1139 |
| | 55.00 | .9545 | .6145 | .0083 | .0441 | 1.1344 | .9315 | .6041 | .0095 | .0395 | 1.1095 |
| | 60.00 | .9680 | .5420 | .0080 | .0146 | 1.1093 | .9514 | .5344 | .0108 | .0129 | 1.0911 |
| | 65.00 | .9794 | .4710 | .0068 | -.0130 | 1.0867 | .9705 | .4700 | .0091 | -.0158 | 1.0782 |
| | 70.00 | .9958 | .4121 | .0025 | -.0466 | 1.0766 | .9833 | .4094 | .0060 | -.0484 | 1.0640 |
| | 75.00 | 1.0005 | .3490 | -.0063 | -.0782 | 1.0567 | .9848 | .3557 | -.0014 | -.0887 | 1.0433 |
| | 79.00 | 1.0043 | .2909 | -.0153 | -.0940 | 1.0414 | .9808 | .3034 | -.0092 | -.1107 | 1.0207 |
| | 75.00 | .9598 | .3555 | -.0034 | -.0950 | 1.0191 | .9744 | .3500 | -.0022 | -.0859 | 1.0318 |
| | 80.00 | .9565 | .2925 | -.0136 | -.1220 | .9928 | .9703 | .2878 | -.0112 | -.1149 | 1.0056 |
| | 85.00 | .9546 | .2209 | -.0253 | -.1369 | .9703 | .9640 | .2212 | -.0228 | -.1364 | .9796 |
| | 90.00 | .9497 | .1459 | -.0361 | -.1459 | .9497 | .9468 | .1551 | -.0309 | -.1551 | .9468 |
| | 95.00 | .9398 | .0660 | -.0452 | -.1476 | .9304 | .9285 | .0856 | -.0389 | -.1662 | .9175 |
| | 100.00 | .9257 | -.0271 | -.0571 | -.1340 | .9163 | .9059 | -.0021 | -.0505 | -.1552 | .8925 |
| | 105.00 | .9151 | -.1556 | -.0752 | -.0865 | .9242 | .8893 | -.1210 | -.0706 | -.1133 | .8903 |
| | 110.00 | .8983 | -.3263 | -.0962 | -.0006 | .9557 | .8713 | -.2956 | -.0966 | -.0202 | .9199 |
| | 107.00 | .9088 | -.2116 | -.0855 | -.0633 | .9310 | .8639 | -.1781 | -.0798 | -.0823 | .8782 |
| | 110.00 | .8973 | -.3286 | -.0978 | .0019 | .9556 | .8464 | -.2973 | -.0927 | -.0101 | .8971 |
| | 115.00 | .8533 | -.5257 | -.1045 | .1158 | .9956 | .8170 | -.5219 | -.1200 | .1277 | .9611 |
| | 120.00 | .8152 | -.7984 | -.1338 | .2838 | 1.1052 | .7923 | -.8109 | -.1656 | .3061 | 1.0916 |
| | 125.00 | .7610 | -1.0652 | -.1363 | .4361 | 1.2344 | .7153 | -1.0260 | -.1464 | .4301 | 1.1744 |
| | 130.00 | .6604 | -1.2649 | -.0965 | .5445 | 1.3190 | .6163 | -1.2258 | -.1083 | .5428 | 1.2600 |
| | 135.00 | .5465 | -1.4152 | -.0386 | .6143 | 1.3871 | .5049 | -1.3799 | -.0565 | .6187 | 1.3327 |
| | 140.00 | .4361 | -1.4859 | .0175 | .6210 | 1.4186 | .3917 | -1.4731 | .0016 | .6468 | 1.3803 |
| 1311 | -5.00 | -.1003 | .6079 | -.0096 | -.0469 | .6143 | -.0988 | .5954 | -.0085 | -.0465 | .6017 |
| | -3.00 | -.0614 | .6124 | -.0062 | -.0292 | .6148 | -.0602 | .6037 | -.0054 | -.0285 | .6061 |
| | -1.00 | -.0206 | .6192 | -.0028 | -.0098 | .6195 | -.0199 | .6027 | -.0032 | -.0094 | .6029 |
| | .00 | -.0019 | .6223 | -.0012 | -.0019 | .6223 | -.0014 | .6095 | -.0015 | -.0014 | .6095 |
| | 1.00 | .0195 | .6232 | .0000 | .0086 | .6234 | .0173 | .6094 | .0001 | .0067 | .6096 |
| | 3.00 | .0582 | .6239 | .0019 | .0254 | .6260 | .0575 | .6100 | .0024 | .0255 | .6122 |
| | 5.00 | .0964 | .6260 | .0045 | .0414 | .6320 | .0942 | .6105 | .0050 | .0406 | .6164 |
| | 10.00 | .2022 | .6352 | .0104 | .0888 | .6607 | .1942 | .6151 | .0116 | .0845 | .6395 |
| | 15.00 | .3069 | .6452 | .0153 | .1294 | .7026 | .2969 | .6210 | .0167 | .1261 | .6766 |
| | 20.00 | .4274 | .6549 | .0188 | .1776 | .7616 | .4099 | .6265 | .0208 | .1709 | .7289 |
| | 17.00 | .3572 | .6483 | .0213 | .1521 | .7244 | .3416 | .6090 | .0228 | .1486 | .6823 |
| | 20.00 | .4278 | .6507 | .0229 | .1794 | .7578 | .4151 | .6121 | .0243 | .1807 | .7172 |
| | 25.00 | .5599 | .6536 | .0233 | .2312 | .8290 | .5357 | .6149 | .0253 | .2256 | .7837 |
| | 30.00 | .6912 | .6584 | .0236 | .2694 | .9158 | .6591 | .6173 | .0245 | .2621 | .8642 |
| | 35.00 | .8183 | .6588 | .0236 | .2924 | 1.0091 | .7872 | .6190 | .0227 | .2898 | .9586 |
| | 40.00 | .9436 | .6564 | .0213 | .3009 | 1.1093 | .9024 | .6158 | .0218 | .2955 | 1.0518 |
| | 45.00 | 1.0498 | .6502 | .0235 | .2825 | 1.2021 | 1.0057 | .6070 | .0218 | .2819 | 1.1403 |
| | 50.00 | 1.1316 | .6335 | .0239 | .2421 | 1.2741 | 1.0846 | .5936 | .0229 | .2425 | 1.2124 |
| | 45.00 | 1.0145 | .5758 | .0078 | .3102 | 1.1246 | .9768 | .5610 | .0103 | .2940 | 1.0874 |
| | 50.00 | 1.0935 | .5596 | .0091 | .2742 | 1.1974 | 1.0647 | .5501 | .0103 | .2630 | 1.1692 |
| | 55.00 | 1.1395 | .5398 | .0100 | .2114 | 1.2430 | 1.1199 | .5309 | .0110 | .2075 | 1.2219 |
| | 60.00 | 1.1725 | .5205 | .0089 | .1355 | 1.2757 | 1.1572 | .5154 | .0109 | .1323 | 1.2599 |
| | 65.00 | 1.1913 | .5009 | .0045 | .0495 | 1.2914 | 1.1836 | .4932 | .0069 | .0532 | 1.2811 |
| | 70.00 | 1.1946 | .4666 | -.0026 | -.0299 | 1.2822 | 1.1873 | .4624 | .0011 | -.0284 | 1.2739 |
| | 75.00 | 1.1898 | .4253 | -.0106 | -.1029 | 1.2594 | 1.1865 | .4229 | -.0075 | -.1014 | 1.2556 |
| | 79.00 | 1.1795 | .3827 | -.0204 | -.1506 | 1.2308 | 1.1647 | .3845 | -.0156 | -.1552 | 1.2167 |

TABLE I.- AERODYNAMIC CHARACTERISTICS OF MODELS - Continued

| Configuration | α, deg | $M_\infty = 3.5$ $C_N$ | $C_A$ | $C_m$ | $C_L$ | $C_D$ | $M_\infty = 4.2$ $C_N$ | $C_A$ | $C_m$ | $C_L$ | $C_D$ |
|---|---|---|---|---|---|---|---|---|---|---|---|
| 1311 | 75.00 | 1.1558 | .4335 | -.0075 | -.1196 | 1.2286 | 1.1537 | .4195 | -.0078 | -.1066 | 1.2230 |
| | 80.00 | 1.1411 | .3841 | -.0172 | -.1801 | 1.1905 | 1.1389 | .3723 | -.0166 | -.1688 | 1.1862 |
| | 85.00 | 1.1217 | .3294 | -.0256 | -.2303 | 1.1461 | 1.1191 | .3166 | -.0257 | -.2179 | 1.1424 |
| | 90.00 | 1.1041 | .2586 | -.0336 | -.2586 | 1.1041 | 1.0935 | .2548 | -.0332 | -.2548 | 1.0935 |
| | 95.00 | 1.0763 | .1862 | -.0385 | -.2793 | 1.0560 | 1.0607 | .1850 | -.0388 | -.2768 | 1.0406 |
| | 100.00 | 1.0431 | .0984 | -.0425 | -.2780 | 1.0102 | 1.0070 | .1032 | -.0422 | -.2765 | .9738 |
| | 105.00 | 1.0001 | -.0219 | -.0465 | -.2376 | .9717 | .9683 | .0016 | -.0465 | -.2521 | .9349 |
| | 110.00 | .9475 | -.1698 | -.0484 | -.1645 | .9485 | .9157 | -.1448 | -.0486 | -.1771 | .9100 |
| | 107.00 | .9775 | -.0812 | -.0522 | -.2081 | .9585 | .9235 | -.0624 | -.0476 | -.2103 | .9013 |
| | 110.00 | .9466 | -.1783 | -.0526 | -.1563 | .9505 | .8867 | -.1609 | -.0482 | -.1521 | .8882 |
| | 115.00 | .8875 | -.3625 | -.0490 | -.0466 | .9576 | .8306 | -.3417 | -.0462 | -.0413 | .8972 |
| | 120.00 | .8136 | -.5620 | -.0412 | .0799 | .9856 | .7546 | -.5365 | -.0411 | .0873 | .9218 |
| | 125.00 | .7361 | -.7680 | -.0324 | .2069 | 1.0435 | .6767 | -.7333 | -.0318 | .2126 | .9749 |
| | 130.00 | .6433 | -.9704 | -.0171 | .3299 | 1.1166 | .5798 | -.9282 | -.0164 | .3383 | 1.0407 |
| | 135.00 | .5428 | -1.1491 | .0010 | .4287 | 1.1963 | .4845 | -1.1156 | .0008 | .4463 | 1.1315 |
| | 140.00 | .4421 | -1.2961 | .0193 | .4944 | 1.2771 | .3907 | -1.2773 | .0170 | .5217 | 1.2296 |
| | 135.00 | .4679 | -1.1627 | -.0077 | .4913 | 1.1531 | .4524 | -1.1136 | -.0065 | .4675 | 1.1073 |
| | 140.00 | .3692 | -1.3165 | .0093 | .5634 | 1.2458 | .3536 | -1.2778 | .0089 | .5505 | 1.2061 |
| | 145.00 | .2768 | -1.4250 | .0188 | .5907 | 1.3261 | .2683 | -1.3991 | .0195 | .5827 | 1.3000 |
| | 150.00 | .2026 | -1.5008 | .0226 | .5749 | 1.4010 | .1943 | -1.4918 | .0241 | .5776 | 1.3891 |
| | 155.00 | .1561 | -1.5643 | .0246 | .5196 | 1.4837 | .1492 | -1.5529 | .0261 | .5211 | 1.4705 |
| | 160.00 | .1129 | -1.6224 | .0239 | .4488 | 1.5632 | .1125 | -1.6159 | .0264 | .4470 | 1.5569 |
| | 165.00 | .0764 | -1.6639 | .0210 | .3569 | 1.6270 | .0797 | -1.6533 | .0244 | .3509 | 1.6176 |
| | 169.00 | .0510 | -1.7015 | .0166 | .2746 | 1.6799 | .0583 | -1.6766 | .0197 | .2627 | 1.6569 |
| | 165.00 | .0540 | -1.6223 | .0229 | .3677 | 1.5810 | .0654 | -1.6470 | .0246 | .3631 | 1.6078 |
| | 170.00 | .0240 | -1.6513 | .0175 | .2631 | 1.6304 | .0362 | -1.6796 | .0183 | .2560 | 1.6604 |
| | 175.00 | .0076 | -1.6757 | .0105 | .1385 | 1.6700 | .0243 | -1.6999 | .0100 | .1240 | 1.6955 |
| | 177.00 | .0083 | -1.6820 | .0069 | .0797 | 1.6801 | .0163 | -1.7013 | .0062 | .0727 | 1.6999 |
| | 179.00 | -.0023 | -1.6887 | .0035 | .0318 | 1.6884 | .0049 | -1.7034 | .0018 | .0248 | 1.7032 |
| | 180.00 | -.0072 | -1.6901 | .0016 | .0072 | 1.6901 | -.0002 | -1.7043 | -.0001 | .0002 | 1.7043 |
| | 181.00 | -.0127 | -1.6926 | -.0001 | -.0168 | 1.6925 | -.0065 | -1.7048 | -.0027 | -.0232 | 1.7046 |
| | 183.00 | -.0232 | -1.6985 | -.0041 | -.0657 | 1.6974 | -.0161 | -1.7056 | -.0065 | -.0732 | 1.7041 |
| | 185.00 | -.0345 | -1.7010 | -.0078 | -.1139 | 1.6975 | -.0271 | -1.7071 | -.0105 | -.1218 | 1.7030 |
| 1121 | -5.00 | -.0756 | .8673 | .0135 | .0003 | .8706 | -.0742 | .8562 | .0126 | .0007 | .8594 |
| | -3.00 | -.0443 | .8720 | .0084 | .0014 | .8731 | -.0429 | .8607 | .0070 | .0022 | .8617 |
| | -1.00 | -.0146 | .8767 | .0027 | .0007 | .8769 | -.0108 | .8632 | .0013 | .0043 | .8633 |
| | .00 | -.0003 | .8779 | .0002 | -.0003 | .8779 | .0035 | .8635 | -.0013 | .0035 | .8635 |
| | 1.00 | .0147 | .8780 | -.0022 | -.0006 | .8782 | .0183 | .8630 | -.0039 | .0032 | .8632 |
| | 3.00 | .0430 | .8763 | -.0075 | -.0030 | .8774 | .0464 | .8615 | -.0087 | .0012 | .8627 |
| | 5.00 | .0701 | .8742 | -.0119 | -.0064 | .8770 | .0751 | .8605 | -.0133 | -.0002 | .8637 |
| | 10.00 | .1427 | .8740 | -.0234 | -.0113 | .8855 | .1482 | .8562 | -.0252 | -.0028 | .8689 |
| | 15.00 | .2143 | .8696 | -.0353 | -.0181 | .8955 | .2172 | .8473 | -.0367 | -.0095 | .8746 |
| | 20.00 | .2859 | .8571 | -.0477 | -.0244 | .9032 | .2891 | .8330 | -.0487 | -.0132 | .8817 |
| | 20.00 | .3071 | .8598 | -.0515 | -.0055 | .9129 | .2897 | .8289 | -.0473 | -.0113 | .8780 |
| | 25.00 | .3782 | .8417 | -.0636 | -.0129 | .9226 | .3586 | .8104 | -.0588 | -.0175 | .8861 |
| | 30.00 | .4398 | .8117 | -.0744 | -.0250 | .9228 | .4221 | .7863 | -.0699 | -.0277 | .8921 |
| | 35.00 | .5070 | .7918 | -.0863 | -.0389 | .9394 | .4816 | .7595 | -.0805 | -.0411 | .8983 |
| | 40.00 | .5553 | .7681 | -.0946 | -.0683 | .9453 | .5305 | .7296 | -.0889 | -.0626 | .8999 |
| | 45.00 | .5896 | .7275 | -.0999 | -.0975 | .9313 | .5653 | .6882 | -.0945 | -.0869 | .8863 |
| | 50.00 | .6085 | .6795 | -.1024 | -.1294 | .9029 | .5826 | .6418 | -.0971 | -.1171 | .8588 |
| | 45.00 | .5542 | .7119 | -.0934 | -.1115 | .8953 | .5411 | .6893 | -.0906 | -.1048 | .8700 |
| | 50.00 | .5735 | .6658 | -.0970 | -.1414 | .8673 | .5640 | .6470 | -.0942 | -.1331 | .8479 |
| | 55.00 | .5806 | .6125 | -.0985 | -.1687 | .8269 | .5731 | .5978 | -.0960 | -.1610 | .8124 |
| | 60.00 | .5820 | .5736 | -.0995 | -.2057 | .7908 | .5737 | .5562 | -.0968 | -.1948 | .7749 |
| | 65.00 | .5730 | .5216 | -.0993 | -.2305 | .7397 | .5664 | .5071 | -.0966 | -.2202 | .7276 |
| | 70.00 | .5589 | .4643 | -.0985 | -.2451 | .6840 | .5548 | .4527 | -.0959 | -.2356 | .6761 |
| | 75.00 | .5430 | .4052 | -.0968 | -.2509 | .6294 | .5324 | .3938 | -.0934 | -.2426 | .6162 |
| | 75.00 | .5297 | .3918 | -.0958 | -.2414 | .6131 | .5297 | .3852 | -.0935 | -.2350 | .6114 |
| | 80.00 | .5089 | .3312 | -.0926 | -.2378 | .5587 | .5074 | .3265 | -.0899 | -.2334 | .5564 |
| | 85.00 | .4855 | .2675 | -.0884 | -.2242 | .5070 | .4833 | .2654 | -.0854 | -.2223 | .5046 |
| | 90.00 | .4626 | .1970 | -.0834 | -.1970 | .4626 | .4574 | .1999 | -.0802 | -.1999 | .4574 |
| | 95.00 | .4398 | .1127 | -.0785 | -.1506 | .4283 | .4338 | .1241 | -.0752 | -.1614 | .4214 |
| | 100.00 | .4168 | .0186 | -.0742 | -.0907 | .4073 | .4035 | .0381 | -.0701 | -.1076 | .3908 |
| | 105.00 | .3920 | -.1009 | -.0703 | -.0040 | .4047 | .3774 | -.0765 | -.0670 | -.0238 | .3843 |
| | 110.00 | .3645 | -.2541 | -.0643 | .1141 | .4294 | .3471 | -.2255 | -.0614 | .0932 | .4033 |
| | 105.00 | .3796 | -.1211 | -.0692 | .0188 | .3980 | .3697 | -.0980 | -.0659 | -.0010 | .3825 |
| | 110.00 | .3507 | -.2783 | -.0638 | .1416 | .4247 | .3413 | -.2428 | -.0605 | .1115 | .4037 |
| | 115.00 | .3218 | -.4452 | -.0558 | .2675 | .4799 | .3113 | -.4073 | -.0533 | .2375 | .4542 |
| | 120.00 | .2902 | -.6336 | -.0460 | .4036 | .5681 | .2776 | -.6015 | -.0442 | .3821 | .5412 |
| | 125.00 | .2559 | -.8441 | -.0334 | .5446 | .6938 | .2388 | -.8048 | -.0318 | .5223 | .6572 |
| | 130.00 | .2123 | -1.0474 | -.0171 | .6659 | .8359 | .1939 | -1.0015 | -.0165 | .6426 | .7923 |
| | 135.00 | .1675 | -1.2277 | -.0019 | .7497 | .9865 | .1509 | -1.1895 | -.0016 | .7344 | .9478 |
| | 135.00 | .1305 | -1.2559 | -.0005 | .7958 | .9804 | .1254 | -1.2008 | -.0002 | .7604 | .9378 |
| | 140.00 | .0944 | -1.3765 | .0121 | .8125 | 1.1152 | .0938 | -1.3430 | .0140 | .7914 | 1.0891 |
| | 145.00 | .0643 | -1.4642 | .0197 | .7871 | 1.2363 | .0698 | -1.4481 | .0239 | .7734 | 1.2262 |
| | 150.00 | .0387 | -1.5483 | .0236 | .7407 | 1.3603 | .0468 | -1.5278 | .0266 | .7234 | 1.3465 |
| | 155.00 | .0192 | -1.5976 | .0243 | .6578 | 1.4560 | .0290 | -1.5963 | .0288 | .6483 | 1.4590 |
| | 160.00 | .0019 | -1.6414 | .0215 | .5596 | 1.5430 | .0140 | -1.6448 | .0275 | .5494 | 1.5504 |
| | 165.00 | -.0048 | -1.6773 | .0171 | .4387 | 1.6190 | .0032 | -1.6817 | .0222 | .4322 | 1.6252 |
| | 169.00 | -.0058 | -1.7003 | .0111 | .3301 | 1.6680 | .0011 | -1.7002 | .0162 | .3233 | 1.6692 |

TABLE I.- AERODYNAMIC CHARACTERISTICS OF MODELS - Continued

| Configuration | α, deg | $M_\infty = 3.5$ $C_N$ | $C_A$ | $C_m$ | $C_L$ | $C_D$ | $M_\infty = 4.2$ $C_N$ | $C_A$ | $C_m$ | $C_L$ | $C_D$ |
|---|---|---|---|---|---|---|---|---|---|---|---|
| 1121 | 165.00 | -.0091 | -1.6399 | .0185 | .4332 | 1.5816 | .0055 | -1.6736 | .0233 | .4279 | 1.6180 |
| | 170.00 | -.0116 | -1.6715 | .0116 | .3017 | 1.6441 | .0034 | -1.6988 | .0168 | .2917 | 1.6736 |
| | 175.00 | -.0101 | -1.6696 | .0059 | .1556 | 1.6624 | .0030 | -1.7114 | .0089 | .1462 | 1.7052 |
| | 177.00 | -.0108 | -1.6867 | .0036 | .0991 | 1.6838 | .0020 | -1.7121 | .0062 | .0876 | 1.7099 |
| | 179.00 | -.0115 | -1.6951 | .0011 | .0411 | 1.6946 | .0026 | -1.7193 | .0029 | .0274 | 1.7190 |
| | 180.00 | -.0094 | -1.7013 | -.0003 | .0094 | 1.7013 | .0038 | -1.7192 | .0011 | -.0038 | 1.7192 |
| | 181.00 | -.0060 | -1.7037 | -.0021 | -.0237 | 1.7035 | .0039 | -1.7170 | -.0017 | -.0339 | 1.7166 |
| | 183.00 | -.0053 | -1.7044 | -.0049 | -.0839 | 1.7024 | .0027 | -1.7155 | -.0049 | -.0925 | 1.7130 |
| | 185.00 | -.0059 | -1.7074 | -.0067 | -.1429 | 1.7014 | .0016 | -1.7153 | -.0077 | -.1511 | 1.7087 |
| 1122 | 45.00 | .5563 | .7067 | -.0932 | -.1063 | .8931 | .5455 | .6900 | -.0905 | -.1022 | .8736 |
| | 50.00 | .5807 | .6670 | -.0976 | -.1376 | .8735 | .5689 | .6490 | -.0945 | -.1315 | .8530 |
| | 55.00 | .5854 | .6100 | -.0984 | -.1639 | .8294 | .5805 | .6014 | -.0963 | -.1596 | .8205 |
| | 60.00 | .5901 | .5688 | -.0995 | -.1975 | .7954 | .5821 | .5547 | -.0967 | -.1893 | .7815 |
| | 65.00 | .5815 | .5094 | -.0979 | -.2159 | .7423 | .5746 | .4988 | -.0954 | -.2093 | .7316 |
| | 70.00 | .5688 | .4490 | -.0943 | -.2274 | .6881 | .5624 | .4408 | -.0920 | -.2218 | .6793 |
| | 75.00 | .5510 | .3856 | -.0884 | -.2299 | .6320 | .5472 | .3815 | -.0871 | -.2269 | .6273 |
| | 75.00 | | | | | | .5295 | .3681 | -.0861 | -.2186 | .6068 |
| | 80.00 | .5172 | .3159 | -.0800 | -.2213 | .5642 | .5160 | .3086 | -.0799 | -.2143 | .5618 |
| | 85.00 | .5009 | .2481 | -.0717 | -.2035 | .5206 | .4971 | .2422 | -.0718 | -.1980 | .5163 |
| | 90.00 | .4848 | .1676 | -.0615 | -.1676 | .4848 | .4780 | .1678 | -.0620 | -.1678 | .4780 |
| | 95.00 | .4705 | .0752 | -.0493 | -.1159 | .4621 | .4590 | .0793 | -.0499 | -.1190 | .4504 |
| | 100.00 | .4582 | -.0229 | -.0360 | -.0570 | .4552 | .4429 | -.0148 | -.0363 | -.0623 | .4388 |
| | 105.00 | .4486 | -.1342 | -.0213 | .0135 | .4680 | .4285 | -.1225 | -.0209 | .0074 | .4456 |
| | 110.00 | .4341 | -.2583 | -.0056 | .0942 | .4962 | .4119 | -.2460 | -.0046 | .0903 | .4712 |
| | 105.00 | .4334 | -.1627 | -.0180 | .0450 | .4607 | .4235 | -.1458 | -.0180 | .0312 | .4468 |
| | 110.00 | .4161 | -.2833 | -.0037 | .1239 | .4879 | .4065 | -.2644 | -.0031 | .1095 | .4724 |
| | 115.00 | .3919 | -.4182 | .0109 | .2134 | .5319 | .3832 | -.3880 | .0114 | .1897 | .5113 |
| | 120.00 | .3607 | -.5327 | .0227 | .2809 | .5788 | .3490 | -.5189 | .0252 | .2749 | .5617 |
| | 125.00 | .3210 | -.6735 | .0345 | .3676 | .6492 | .3056 | -.6549 | .0380 | .3612 | .6259 |
| | 130.00 | .2729 | -.8124 | .0445 | .4469 | .7313 | .2607 | -.7908 | .0483 | .4382 | .7080 |
| | 135.00 | .2272 | -.9521 | .0508 | .5125 | .8339 | .2156 | -.9333 | .0549 | .5074 | .8124 |
| | 135.00 | .1951 | -.9663 | .0524 | .5453 | .8213 | .1914 | -.9245 | .0558 | .5184 | .7890 |
| | 140.00 | .1568 | -1.1028 | .0542 | .5888 | .9456 | .1564 | -1.0551 | .0592 | .5584 | .9087 |
| | 145.00 | .1264 | -1.2170 | .0527 | .5945 | 1.0694 | .1276 | -1.1748 | .0573 | .5693 | 1.0355 |
| | 150.00 | .0963 | -1.3175 | .0486 | .5754 | 1.1892 | .1030 | -1.2787 | .0541 | .5502 | 1.1589 |
| | 155.00 | .0704 | -1.4082 | .0426 | .5313 | 1.3061 | .0770 | -1.3774 | .0475 | .5123 | 1.2809 |
| | 160.00 | .0456 | -1.4825 | .0342 | .4642 | 1.4087 | .0542 | -1.4597 | .0399 | .4483 | 1.3902 |
| | 165.00 | .0307 | -1.5415 | .0259 | .3693 | 1.4969 | .0370 | -1.5208 | .0312 | .3579 | 1.4786 |
| | 169.00 | .0200 | -1.5792 | .0181 | .2817 | 1.5540 | .0238 | -1.5597 | .0215 | .2742 | 1.5355 |
| | 165.00 | .0285 | -1.4943 | .0292 | .3593 | 1.4508 | .0341 | -1.4999 | .0305 | .3553 | 1.4576 |
| | 170.00 | .0162 | -1.5221 | .0199 | .2483 | 1.5018 | .0207 | -1.5426 | .0209 | .2475 | 1.5228 |
| | 175.00 | .0085 | -1.5585 | .0110 | .1273 | 1.5533 | .0118 | -1.5674 | .0115 | .1248 | 1.5624 |
| | 177.00 | .0046 | -1.5654 | .0080 | .0773 | 1.5635 | .0084 | -1.5730 | .0082 | .0739 | 1.5712 |
| | 179.00 | .0008 | -1.5756 | .0043 | .0267 | 1.5754 | .0050 | -1.5795 | .0037 | .0226 | 1.5794 |
| | 180.00 | .0001 | -1.5783 | .0026 | -.0001 | 1.5783 | .0039 | -1.5804 | .0016 | -.0039 | 1.5804 |
| | 181.00 | .0015 | -1.5679 | -.0002 | -.0289 | 1.5677 | .0034 | -1.5783 | -.0013 | -.0309 | 1.5780 |
| | 183.00 | .0003 | -1.5804 | -.0034 | -.0830 | 1.5782 | .0000 | -1.5769 | -.0053 | -.0825 | 1.5747 |
| | 185.00 | -.0042 | -1.5690 | -.0070 | -.1326 | 1.5634 | -.0052 | -1.5738 | -.0094 | -.1320 | 1.5683 |
| 1123 | 45.00 | .5728 | .7109 | -.0924 | -.0977 | .9077 | .5611 | .6927 | -.0894 | -.0930 | .8866 |
| | 50.00 | .5924 | .6670 | -.0960 | -.1301 | .8825 | .5848 | .6503 | -.0933 | -.1223 | .8660 |
| | 55.00 | .6000 | .6115 | -.0973 | -.1568 | .8422 | .5943 | .6008 | -.0950 | -.1512 | .8314 |
| | 60.00 | .6024 | .5722 | -.0985 | -.1943 | .8078 | .5928 | .5551 | -.0954 | -.1843 | .7910 |
| | 65.00 | .5928 | .5159 | -.0987 | -.2171 | .7553 | .5871 | .5021 | -.0955 | -.2070 | .7443 |
| | 70.00 | .5810 | .4563 | -.1014 | -.2301 | .7021 | .5761 | .4486 | -.0974 | -.2245 | .6948 |
| | 75.00 | .5695 | .3916 | -.1046 | -.2309 | .6515 | .5614 | .3872 | -.0991 | -.2287 | .6425 |
| | 75.00 | .5356 | .3845 | -.1027 | -.2328 | .6169 | .5359 | .3776 | -.1007 | -.2260 | .6153 |
| | 80.00 | .5194 | .3187 | -.1049 | -.2237 | .5668 | .5179 | .3153 | -.1017 | -.2206 | .5648 |
| | 85.00 | .5000 | .2512 | -.1059 | -.2066 | .5200 | .4961 | .2508 | -.1015 | -.2066 | .5161 |
| | 90.00 | .4800 | .1771 | -.1073 | -.1771 | .4800 | .4721 | .1833 | -.1011 | -.1833 | .4721 |
| | 95.00 | .4623 | .0880 | -.1110 | -.1280 | .4528 | .4488 | .1038 | -.1027 | -.1425 | .4381 |
| | 100.00 | .4465 | -.0149 | -.1191 | -.0628 | .4423 | .4304 | .0088 | -.1103 | -.0834 | .4224 |
| | 105.00 | .4388 | -.1550 | -.1335 | .0361 | .4640 | .4182 | -.1257 | -.1263 | .0132 | .4365 |
| | 110.00 | .4288 | -.3343 | -.1488 | .1674 | .5172 | .4104 | -.3137 | -.1479 | .1544 | .4929 |
| | 105.00 | .4307 | -.1938 | -.1373 | .0757 | .4662 | .4161 | -.1578 | -.1295 | .0447 | .4427 |
| | 110.00 | .4114 | -.3788 | -.1493 | .2153 | .5162 | .4074 | -.3543 | -.1521 | .1936 | .5040 |
| | 115.00 | .4079 | -.5926 | -.1684 | .3647 | .6201 | .4115 | -.5900 | -.1878 | .3608 | .6222 |
| | 120.00 | .4004 | -.8881 | -.1932 | .5689 | .7909 | .3928 | -.8381 | -.1929 | .5294 | .7593 |
| | 125.00 | .3491 | -1.1039 | -.1643 | .7041 | .9192 | .3429 | -1.0697 | -.1745 | .6795 | .8945 |
| | 130.00 | .2918 | -1.3053 | -.1253 | .8123 | 1.0625 | .2873 | -1.2889 | -.1430 | .8026 | 1.0486 |
| | 135.00 | .2106 | -1.4482 | -.0668 | .8751 | 1.1729 | .2081 | -1.4561 | -.0859 | .8825 | 1.1767 |
| | 135.00 | .1768 | -1.4843 | -.0535 | .9246 | 1.1746 | .1838 | -1.4498 | -.0743 | .8952 | 1.1552 |
| | 140.00 | .1048 | -1.5329 | .0019 | .9050 | 1.2417 | .1083 | -1.5257 | -.0110 | .8977 | 1.2383 |
| | 145.00 | .0630 | -1.5724 | .0174 | .8503 | 1.3241 | .0649 | -1.5598 | .0197 | .8415 | 1.3149 |
| | 150.00 | .0353 | -1.6177 | .0258 | .7783 | 1.4187 | .0385 | -1.6068 | .0284 | .7701 | 1.4108 |
| | 155.00 | .0121 | -1.6601 | .0276 | .6906 | 1.5097 | .0162 | -1.6494 | .0312 | .6824 | 1.5017 |
| | 160.00 | -.0021 | -1.6948 | .0267 | .5817 | 1.5919 | .0002 | -1.6846 | .0311 | .5760 | 1.5831 |
| | 165.00 | -.0074 | -1.7225 | .0201 | .4529 | 1.6619 | -.0077 | -1.7168 | .0256 | .4517 | 1.6563 |
| | 169.00 | -.0053 | -1.7272 | .0118 | .3348 | 1.6945 | -.0051 | -1.7307 | .0201 | .3352 | 1.6979 |
| | 165.00 | -.0047 | -1.6742 | .0287 | .4378 | 1.6160 | -.0026 | -1.6800 | .0264 | .4373 | 1.6221 |
| | 170.00 | -.0039 | -1.6759 | .0208 | .2948 | 1.6497 | -.0018 | -1.7074 | .0198 | .2983 | 1.6812 |
| | 175.00 | -.0029 | -1.6954 | .0123 | .1507 | 1.6887 | .0012 | -1.7134 | .0102 | .1481 | 1.7070 |
| | 177.00 | -.0031 | -1.6970 | .0104 | .0919 | 1.6945 | .0030 | -1.7136 | .0074 | .0867 | 1.7115 |
| | 179.00 | -.0028 | -1.7029 | .0073 | .0325 | 1.7026 | .0049 | -1.7298 | .0036 | .0253 | 1.7296 |
| | 180.00 | -.0016 | -1.6946 | .0052 | .0016 | 1.6946 | .0066 | -1.7155 | .0023 | -.0066 | 1.7155 |
| | 181.00 | .0039 | -1.6976 | .0039 | -.0335 | 1.6972 | .0073 | -1.7292 | -.0005 | -.0375 | 1.7288 |
| | 183.00 | .0046 | -1.7106 | .0014 | -.0941 | 1.7081 | .0085 | -1.7280 | -.0037 | -.0989 | 1.7252 |
| | 185.00 | .0046 | -1.7155 | -.0015 | -.1541 | 1.7086 | .0103 | -1.7282 | -.0066 | -.1609 | 1.7207 |

TABLE I.- AERODYNAMIC CHARACTERISTICS OF MODELS - Continued

| Configuration | α, deg | $M_\infty = 3.5$ $C_N$ | $C_A$ | $C_m$ | $C_L$ | $C_D$ | $M_\infty = 4.2$ $C_N$ | $C_A$ | $C_m$ | $C_L$ | $C_D$ |
|---|---|---|---|---|---|---|---|---|---|---|---|
| 2121 | -5.00 | -.0822 | .8506 | .0128 | -.0078 | .8546 | -.0744 | .8602 | .0097 | .0009 | .8634 |
| | -3.00 | -.0517 | .8544 | .0089 | -.0069 | .8559 | -.0428 | .8635 | .0053 | .0025 | .8645 |
| | -1.00 | -.0211 | .8594 | .0043 | -.0061 | .8597 | -.0170 | .8619 | .0034 | -.0020 | .8621 |
| | .00 | -.0082 | .8606 | .0022 | -.0082 | .8606 | -.0035 | .8623 | .0016 | -.0035 | .8623 |
| | 1.00 | .0061 | .8612 | .0003 | -.0089 | .8612 | .0100 | .8616 | -.0008 | -.0050 | .8617 |
| | 3.00 | .0335 | .8603 | -.0035 | -.0115 | .8609 | .0376 | .8617 | -.0047 | -.0076 | .8625 |
| | 5.00 | .0620 | .8606 | -.0072 | -.0132 | .8627 | .0663 | .8613 | -.0083 | -.0091 | .8638 |
| | 10.00 | .1313 | .8654 | -.0154 | -.0210 | .8751 | .1345 | .8612 | -.0166 | -.0170 | .8715 |
| | 15.00 | .2049 | .8681 | -.0246 | -.0268 | .8915 | .2050 | .8595 | -.0254 | -.0245 | .8833 |
| | 20.00 | .2827 | .8669 | -.0342 | -.0308 | .9113 | .2793 | .8545 | -.0348 | -.0298 | .8985 |
| | 16.00 | .2476 | .8703 | -.0322 | -.0019 | .9048 | .2287 | .8445 | -.0294 | -.0130 | .8748 |
| | 20.00 | .3077 | .8671 | -.0397 | -.0075 | .9200 | .2855 | .8394 | -.0365 | -.0188 | .8864 |
| | 25.00 | .3814 | .8547 | -.0487 | -.0155 | .9358 | .3632 | .8337 | -.0457 | -.0231 | .9091 |
| | 30.00 | .4622 | .8542 | -.0578 | -.0268 | .9709 | .4385 | .8243 | -.0540 | -.0325 | .9332 |
| | 35.00 | .5354 | .8445 | -.0647 | -.0458 | .9989 | .5076 | .8113 | -.0604 | -.0495 | .9557 |
| | 40.00 | .5894 | .8226 | -.0685 | -.0773 | 1.0090 | .5640 | .7833 | -.0645 | -.0715 | .9625 |
| | 45.00 | .6277 | .7775 | -.0699 | -.1059 | .9937 | .6034 | .7356 | -.0661 | -.0935 | .9469 |
| | 50.00 | .6505 | .7171 | -.0694 | -.1312 | .9592 | .6259 | .6715 | -.0660 | -.1121 | .9111 |
| | 45.00 | .6138 | .7493 | -.0693 | -.0958 | .9638 | .5949 | .7308 | -.0676 | -.0961 | .9375 |
| | 50.00 | .6333 | .6918 | -.0697 | -.1228 | .9298 | .6186 | .6742 | -.0682 | -.1189 | .9073 |
| | 55.00 | .6462 | .6330 | -.0704 | -.1479 | .8924 | .6314 | .6124 | -.0686 | -.1394 | .8685 |
| | 60.00 | .6489 | .5739 | -.0708 | -.1725 | .8490 | .6314 | .5476 | -.0687 | -.1585 | .8206 |
| | 65.00 | .6438 | .5078 | -.0716 | -.1881 | .7981 | .6324 | .4909 | -.0696 | -.1776 | .7807 |
| | 70.00 | .6338 | .4415 | -.0720 | -.1981 | .7466 | .6240 | .4289 | -.0699 | -.1896 | .7331 |
| | 75.00 | .6201 | .3825 | -.0721 | -.2090 | .6980 | .6106 | .3713 | -.0698 | -.2006 | .6859 |
| | 75.00 | .5994 | .3797 | -.0718 | -.2117 | .6773 | .5985 | .3628 | -.0704 | -.1955 | .6720 |
| | 80.00 | .5839 | .3180 | -.0711 | -.2118 | .6302 | .5819 | .3042 | -.0692 | -.1986 | .6259 |
| | 85.00 | .5676 | .2545 | -.0697 | -.2040 | .5876 | .5641 | .2461 | -.0675 | -.1960 | .5835 |
| | 90.00 | .5509 | .1868 | -.0672 | -.1868 | .5509 | .5448 | .1855 | -.0648 | -.1855 | .5448 |
| | 95.00 | .5325 | .1083 | -.0643 | -.1543 | .5211 | .5220 | .1166 | -.0613 | -.1617 | .5098 |
| | 100.00 | .5127 | .0216 | -.0618 | -.1103 | .5011 | .4989 | .0389 | -.0587 | -.1249 | .4845 |
| | 105.00 | .4924 | -.0946 | -.0599 | -.0360 | .5001 | .4737 | -.0665 | -.0570 | -.0584 | .4748 |
| | 110.00 | .4708 | -.2379 | -.0565 | .0626 | .5238 | .4477 | -.2079 | -.0538 | .0423 | .4918 |
| | 105.00 | .4706 | -.1300 | -.0599 | .0038 | .4882 | .4671 | -.0958 | -.0566 | -.0284 | .4760 |
| | 110.00 | .4476 | -.2729 | -.0564 | .1033 | .5139 | .4383 | -.2424 | -.0531 | .0779 | .4948 |
| | 115.00 | .4130 | -.4595 | -.0487 | .2419 | .5685 | .4048 | -.4072 | -.0467 | .1979 | .5390 |
| | 120.00 | .3782 | -.6271 | -.0403 | .3540 | .6411 | .3625 | -.5926 | -.0384 | .3319 | .6102 |
| | 125.00 | .3312 | -.8305 | -.0278 | .4903 | .7477 | .3132 | -.7908 | -.0269 | .4682 | .7102 |
| | 130.00 | .2811 | -1.0202 | -.0131 | .6008 | .8711 | .2585 | -.9946 | -.0124 | .5957 | .8373 |
| | 135.00 | .2252 | -1.2115 | .0018 | .6975 | 1.0159 | .2038 | -1.1834 | .0019 | .6927 | .9809 |
| 2122 | 45.00 | .6096 | .7506 | -.0693 | -.0997 | .9619 | .5968 | .7344 | -.0680 | -.0973 | .9413 |
| | 50.00 | .6305 | .6908 | -.0702 | -.1239 | .9270 | .6203 | .6786 | -.0686 | -.1211 | .9114 |
| | 55.00 | .6421 | .6333 | -.0703 | -.1505 | .8892 | .6332 | .6166 | -.0690 | -.1419 | .8724 |
| | 60.00 | .6435 | .5658 | -.0705 | -.1682 | .8402 | .6366 | .5491 | -.0690 | -.1572 | .8259 |
| | 65.00 | .6391 | .4958 | -.0691 | -.1792 | .7887 | .6319 | .4837 | -.0680 | -.1713 | .7771 |
| | 70.00 | .6292 | .4289 | -.0667 | -.1878 | .7380 | .6259 | .4187 | -.0661 | -.1793 | .7314 |
| | 75.00 | .6250 | .3670 | -.0640 | -.1927 | .6987 | .6110 | .3576 | -.0629 | -.1873 | .6828 |
| | 75.00 | .6050 | .3656 | -.0638 | -.1965 | .6790 | .6057 | .3535 | -.0635 | -.1847 | .6766 |
| | 80.00 | .5932 | .3012 | -.0596 | -.1936 | .6365 | .5934 | .2914 | -.0592 | -.1840 | .6350 |
| | 85.00 | .5825 | .2310 | -.0538 | -.1793 | .6004 | .5809 | .2283 | -.0539 | -.1768 | .5986 |
| | 90.00 | .5713 | .1560 | -.0465 | -.1560 | .5713 | .5671 | .1580 | -.0469 | -.1580 | .5671 |
| | 95.00 | .5632 | .0682 | -.0372 | -.1170 | .5552 | .5535 | .0752 | -.0377 | -.1231 | .5448 |
| | 100.00 | .5549 | -.0253 | -.0257 | -.0715 | .5509 | .5405 | -.0119 | -.0265 | -.0822 | .5344 |
| | 105.00 | .5482 | -.1338 | -.0124 | -.0127 | .5641 | .5328 | -.1182 | -.0126 | -.0237 | .5452 |
| | 110.00 | .5390 | -.2542 | .0021 | .0546 | .5934 | .5133 | -.2343 | .0024 | .0446 | .5624 |
| | 105.00 | .5181 | -.1666 | -.0092 | .0268 | .5435 | .5179 | -.1508 | -.0088 | .0117 | .5393 |
| | 110.00 | .5032 | -.2842 | .0039 | .0950 | .5701 | .4977 | -.2694 | .0057 | .0830 | .5598 |
| | 115.00 | .4746 | -.4073 | .0165 | .1685 | .6022 | .4641 | -.3934 | .0195 | .1604 | .5869 |
| | 120.00 | .4393 | -.5284 | .0283 | .2379 | .6446 | .4267 | -.5162 | .0317 | .2336 | .6276 |
| | 125.00 | .3888 | -.6590 | .0390 | .3168 | .6965 | .3725 | -.6520 | .0433 | .3204 | .6791 |
| | 130.00 | .3289 | -.7962 | .0484 | .3985 | .7638 | .3165 | -.7875 | .0527 | .3999 | .7487 |
| | 135.00 | .2699 | -.9340 | .0538 | .4696 | .8512 | .2589 | -.9194 | .0579 | .4670 | .8332 |
| 2123 | 45.00 | .6132 | .7514 | -.0696 | -.0977 | .9649 | .5973 | .7369 | -.0680 | -.0987 | .9435 |
| | 50.00 | .6318 | .6893 | -.0695 | -.1219 | .9271 | .6212 | .6787 | -.0684 | -.1206 | .9122 |
| | 55.00 | .6435 | .6373 | -.0705 | -.1529 | .8926 | .6339 | .6187 | -.0690 | -.1432 | .8742 |
| | 60.00 | .6454 | .5713 | -.0707 | -.1721 | .8446 | .6382 | .5548 | -.0697 | -.1614 | .8301 |
| | 65.00 | .6426 | .5021 | -.0729 | -.1835 | .7946 | .6308 | .4841 | -.0705 | -.1721 | .7763 |
| | 70.00 | .6366 | .4341 | -.0765 | -.1902 | .7467 | .6243 | .4232 | -.0733 | -.1842 | .7313 |
| | 75.00 | .6337 | .3706 | -.0816 | -.1940 | .7080 | .6149 | .3583 | -.0765 | -.1870 | .6867 |
| | 75.00 | .6093 | .3693 | -.0788 | -.1990 | .6841 | .6090 | .3570 | -.0774 | -.1872 | .6807 |
| | 80.00 | .5975 | .3010 | -.0832 | -.1926 | .6407 | .5966 | .2943 | -.0805 | -.1862 | .6386 |
| | 85.00 | .5857 | .2333 | -.0873 | -.1814 | .6038 | .5820 | .2326 | -.0834 | -.1810 | .6001 |
| | 90.00 | .5711 | .1618 | -.0909 | -.1618 | .5711 | .5638 | .1678 | -.0858 | -.1678 | .5638 |
| | 95.00 | .5559 | .0784 | -.0964 | -.1266 | .5470 | .5436 | .0952 | -.0890 | -.1422 | .5332 |
| | 100.00 | .5458 | -.0169 | -.1062 | -.0782 | .5404 | .5286 | .0076 | -.0982 | -.0993 | .5193 |
| | 105.00 | .5386 | -.1481 | -.1216 | .0037 | .5585 | .5201 | -.1188 | -.1158 | -.0198 | .5331 |
| | 110.00 | .5319 | -.3265 | -.1395 | .1249 | .6115 | .5140 | -.3037 | -.1402 | .1096 | .5869 |
| | 105.00 | .5200 | -.1922 | -.1247 | .0511 | .5520 | .5109 | -.1662 | -.1210 | .0283 | .5365 |
| | 110.00 | .5126 | -.3847 | -.1429 | .1862 | .6133 | .5035 | -.3530 | -.1440 | .1595 | .5938 |
| | 115.00 | .5075 | -.6031 | -.1703 | .3321 | .7149 | .5086 | -.6067 | -.1871 | .3350 | .7173 |
| | 120.00 | .4894 | -.8897 | -.1851 | .5258 | .8687 | .4714 | -.8346 | -.1848 | .4871 | .8255 |
| | 125.00 | .4300 | -1.0916 | -.1578 | .6476 | .9783 | .4166 | -1.0654 | -.1679 | .6337 | .9524 |
| | 130.00 | .3664 | -1.2938 | -.1209 | .7556 | 1.1123 | .3515 | -1.2844 | -.1366 | .7580 | 1.0949 |
| | 135.00 | .2705 | -1.4497 | -.0601 | .8338 | 1.2164 | .2675 | -1.4516 | -.0847 | .8372 | 1.2156 |

TABLE I.- AERODYNAMIC CHARACTERISTICS OF MODELS - Continued

| Configuration | α, deg | $M_\infty = 3.5$ $C_N$ | $C_A$ | $C_m$ | $C_L$ | $C_D$ | $M_\infty = 4.2$ $C_N$ | $C_A$ | $C_m$ | $C_L$ | $C_D$ |
|---|---|---|---|---|---|---|---|---|---|---|---|
| 3121 | -5.00 | -.0690 | .8672 | .0088 | .0069 | .8699 | -.0645 | .8710 | .0088 | .0116 | .8733 |
| | -3.00 | -.0395 | .8709 | .0055 | .0062 | .8718 | -.0354 | .8732 | .0048 | .0103 | .8739 |
| | -1.00 | -.0112 | .8672 | .0013 | .0039 | .8673 | -.0085 | .8760 | .0014 | .0068 | .8760 |
| | .00 | .0045 | .8763 | -.0006 | .0045 | .8763 | .0047 | .8761 | -.0005 | .0047 | .8761 |
| | 1.00 | .0195 | .8786 | -.0029 | .0042 | .8788 | .0178 | .8752 | -.0027 | .0025 | .8754 |
| | 3.00 | .0464 | .8796 | -.0061 | .0003 | .8808 | .0433 | .8761 | -.0058 | -.0027 | .8772 |
| | 5.00 | .0736 | .8807 | -.0092 | -.0035 | .8838 | .0698 | .8749 | -.0091 | -.0068 | .8777 |
| | 10.00 | .1442 | .8806 | -.0168 | -.0109 | .8922 | .1365 | .8789 | -.0169 | -.0182 | .8892 |
| | 15.00 | .2153 | .8910 | -.0246 | -.0226 | .9163 | .2046 | .8826 | -.0242 | -.0308 | .9055 |
| | 20.00 | .2967 | .9009 | -.0331 | -.0293 | .9481 | .2831 | .8851 | -.0328 | -.0367 | .9285 |
| | 16.00 | .2382 | .9050 | -.0269 | -.0205 | .9356 | .2214 | .8747 | -.0257 | -.0283 | .9018 |
| | 20.00 | .2967 | .9064 | -.0333 | -.0312 | .9532 | .2802 | .8789 | -.0315 | -.0373 | .9217 |
| | 25.00 | .3849 | .9130 | -.0418 | -.0371 | .9902 | .3636 | .8836 | -.0394 | -.0439 | .9545 |
| | 30.00 | .4655 | .9191 | -.0475 | -.0565 | 1.0288 | .4451 | .8847 | -.0451 | -.0569 | .9888 |
| | 35.00 | .5414 | .9130 | -.0515 | -.0802 | 1.0584 | .5155 | .8763 | -.0484 | -.0803 | 1.0135 |
| | 40.00 | .6033 | .8973 | -.0530 | -.1146 | 1.0752 | .5785 | .8531 | -.0500 | -.1052 | 1.0254 |
| | 45.00 | .6456 | .8487 | -.0517 | -.1436 | 1.0566 | .6187 | .7974 | -.0487 | -.1263 | 1.0013 |
| | 50.00 | .6660 | .7745 | -.0493 | -.1652 | 1.0080 | .6412 | .7221 | -.0463 | -.1410 | .9554 |
| | 45.00 | .6330 | .8037 | -.0510 | -.1207 | 1.0159 | .6124 | .7917 | -.0498 | -.1268 | .9928 |
| | 50.00 | .6546 | .7297 | -.0496 | -.1382 | .9704 | .6358 | .7189 | -.0480 | -.1420 | .9491 |
| | 55.00 | .6646 | .6620 | -.0490 | -.1611 | .9241 | .6506 | .6411 | -.0480 | -.1520 | .9006 |
| | 60.00 | .6752 | .5848 | -.0498 | -.1688 | .8771 | .6567 | .5605 | -.0487 | -.1570 | .8490 |
| | 65.00 | .6734 | .5072 | -.0515 | -.1751 | .8247 | .6562 | .4830 | -.0500 | -.1604 | .7988 |
| | 70.00 | .6628 | .4459 | -.0519 | -.1923 | .7753 | .6462 | .4114 | -.0506 | -.1656 | .7479 |
| | 75.00 | .6593 | .4580 | -.0523 | -.2718 | .7553 | .6383 | .3502 | -.0518 | -.1731 | .7072 |
| | 75.00 | .6273 | .3626 | -.0529 | -.1878 | .6997 | .6306 | .3480 | -.0526 | -.1729 | .6992 |
| | 80.00 | .6202 | .3008 | -.0539 | -.1885 | .6630 | .6185 | .2893 | -.0527 | -.1775 | .6593 |
| | 85.00 | .6044 | .2361 | -.0532 | -.1825 | .6227 | .6057 | .2308 | -.0520 | -.1771 | .6235 |
| | 90.00 | .5944 | .1683 | -.0522 | -.1683 | .5944 | .5901 | .1700 | -.0504 | -.1700 | .5901 |
| | 95.00 | .5775 | .0897 | -.0501 | -.1397 | .5675 | .5690 | .1028 | -.0479 | -.1520 | .5578 |
| | 100.00 | .5643 | .0059 | -.0489 | -.1038 | .5547 | .5502 | .0279 | -.0463 | -.1230 | .5370 |
| | 105.00 | .5467 | -.1061 | -.0481 | -.0390 | .5556 | .5319 | -.0749 | -.0459 | -.0654 | .5332 |
| | 110.00 | .5268 | -.2471 | -.0456 | .0520 | .5795 | .5026 | -.2185 | -.0435 | .0334 | .5470 |
| | 105.00 | .5273 | -.1417 | -.0484 | .0004 | .5460 | .5163 | -.1036 | -.0452 | -.0335 | .5255 |
| | 110.00 | .5021 | -.2834 | -.0455 | .0946 | .5687 | .4873 | -.2478 | -.0423 | .0662 | .5427 |
| | 115.00 | .4637 | -.4587 | -.0395 | .2197 | .6142 | .4471 | -.4274 | -.0365 | .1984 | .5858 |
| | 120.00 | .4246 | -.6284 | -.0316 | .3319 | .6819 | .4083 | -.5953 | -.0304 | .3113 | .6513 |
| | 125.00 | .3776 | -.8321 | -.0207 | .4650 | .7866 | .3544 | -.7990 | -.0198 | .4512 | .7486 |
| | 130.00 | .3209 | -1.0302 | -.0068 | .5829 | .9080 | .2958 | -.9998 | -.0067 | .5758 | .8693 |
| | 135.00 | .2587 | -1.2069 | .0065 | .6705 | 1.0363 | .2364 | -1.1934 | .0067 | .6767 | 1.0111 |
| 3122 | 45.00 | .6276 | .8024 | -.0521 | -.1236 | 1.0112 | .6052 | .7870 | -.0504 | -.1286 | .9844 |
| | 50.00 | .6489 | .7301 | -.0506 | -.1422 | .9664 | .6302 | .7156 | -.0488 | -.1431 | .9428 |
| | 55.00 | .6595 | .6528 | -.0500 | -.1564 | .9146 | .6448 | .6335 | -.0485 | -.1491 | .8916 |
| | 60.00 | .6672 | .5758 | -.0502 | -.1651 | .8657 | .6508 | .5550 | -.0489 | -.1552 | .8411 |
| | 65.00 | .6637 | .4946 | -.0495 | -.1678 | .8105 | .6510 | .4745 | -.0488 | -.1549 | .7905 |
| | 70.00 | .6613 | .4233 | -.0485 | -.1716 | .7662 | .6461 | .4068 | -.0478 | -.1613 | .7462 |
| | 75.00 | .6546 | .3528 | -.0464 | -.1714 | .7236 | .6384 | .3436 | -.0462 | -.1667 | .7055 |
| | 75.00 | .6294 | .3527 | -.0450 | -.1778 | .6993 | .6291 | .3345 | -.0455 | -.1603 | .6943 |
| | 80.00 | .6242 | .2860 | -.0421 | -.1733 | .6644 | .6190 | .2714 | -.0423 | -.1598 | .6567 |
| | 85.00 | .6166 | .2157 | -.0375 | -.1612 | .6331 | .6166 | .2097 | -.0382 | -.1552 | .6326 |
| | 90.00 | .6106 | .1412 | -.0315 | -.1412 | .6106 | .6083 | .1414 | -.0327 | -.1414 | .6083 |
| | 95.00 | .6080 | .0560 | -.0233 | -.1088 | .6008 | .5991 | .0631 | -.0247 | -.1151 | .5913 |
| | 100.00 | .6043 | -.0362 | -.0130 | -.0692 | .6014 | .5889 | -.0216 | -.0143 | -.0810 | .5838 |
| | 105.00 | .6011 | -.1436 | -.0005 | -.0169 | .6178 | .5772 | -.1256 | -.0011 | -.0281 | .5900 |
| | 110.00 | .5926 | -.2599 | .0130 | .0415 | .6458 | .5612 | -.2430 | .0134 | .0364 | .6105 |
| | 105.00 | .5833 | -.1769 | .0027 | .0199 | .6092 | .5717 | -.1519 | .0016 | -.0013 | .5915 |
| | 110.00 | .5678 | -.2959 | .0152 | .0839 | .6348 | .5542 | -.2713 | .0156 | .0654 | .6136 |
| | 115.00 | .5346 | -.4146 | .0268 | .1499 | .6597 | .5204 | -.3936 | .0285 | .1368 | .6379 |
| | 120.00 | .4978 | -.5319 | .0373 | .2117 | .6971 | .4756 | -.5159 | .0396 | .2090 | .6699 |
| | 125.00 | .4399 | -.6668 | .0473 | .2939 | .7428 | .4157 | -.6527 | .0504 | .2963 | .7149 |
| | 130.00 | .3751 | -.7975 | .0552 | .3698 | .7999 | .3539 | -.7840 | .0585 | .3731 | .7750 |
| | 135.00 | .3094 | -.9371 | .0600 | .4438 | .8814 | .2892 | -.9305 | .0635 | .4535 | .8625 |
| 3123 | 45.00 | .6308 | .8063 | -.0516 | -.1241 | 1.0161 | .6108 | .7930 | -.0502 | -.1288 | .9926 |
| | 50.00 | .6501 | .7302 | -.0498 | -.1415 | .9674 | .6352 | .7169 | -.0484 | -.1409 | .9474 |
| | 55.00 | .6633 | .6597 | -.0494 | -.1599 | .9217 | .6505 | .6422 | -.0483 | -.1530 | .9013 |
| | 60.00 | .6634 | .5778 | -.0497 | -.1687 | .8634 | .6566 | .5611 | -.0488 | -.1576 | .8492 |
| | 65.00 | .6634 | .4960 | -.0528 | -.1691 | .8108 | .6567 | .4821 | -.0511 | -.1594 | .7989 |
| | 70.00 | .6631 | .4216 | -.0572 | -.1694 | .7673 | .6548 | .4100 | -.0549 | -.1613 | .7555 |
| | 75.00 | .6582 | .3533 | -.0619 | -.1709 | .7272 | .6484 | .3466 | -.0585 | -.1670 | .7160 |
| | 75.00 | .6404 | .3574 | -.0606 | -.1795 | .7111 | .6377 | .3400 | -.0594 | -.1634 | .7040 |
| | 80.00 | .6332 | .2869 | -.0661 | -.1725 | .6734 | .6298 | .2774 | -.0638 | -.1638 | .6684 |
| | 85.00 | .6255 | .2181 | -.0714 | -.1628 | .6421 | .6193 | .2149 | -.0680 | -.1601 | .6356 |
| | 90.00 | .6137 | .1472 | -.0760 | -.1472 | .6137 | .6073 | .1519 | -.0716 | -.1519 | .6073 |
| | 95.00 | .6059 | .0645 | -.0833 | -.1171 | .5980 | .5912 | .0828 | -.0762 | -.1340 | .5818 |
| | 100.00 | .5977 | -.0316 | -.0940 | -.0727 | .5941 | .5785 | -.0016 | -.0860 | -.0989 | .5700 |
| | 105.00 | .5929 | -.1573 | -.1097 | -.0016 | .6134 | .5717 | -.1287 | -.1049 | -.0237 | .5855 |
| | 110.00 | .5863 | -.3249 | -.1268 | .1048 | .6620 | .5653 | -.3091 | -.1290 | .0972 | .6369 |
| | 105.00 | .5797 | -.2069 | -.1150 | .0499 | .6134 | .5643 | -.1705 | -.1096 | .0186 | .5892 |
| | 110.00 | .5662 | -.3861 | -.1294 | .1691 | .6642 | .5568 | -.3590 | -.1335 | .1469 | .6460 |
| | 115.00 | .5535 | -.5864 | -.1471 | .2976 | .7494 | .5584 | -.5975 | -.1729 | .3055 | .7586 |
| | 120.00 | .5405 | -.8796 | -.1751 | .4915 | .9079 | .5225 | -.8409 | -.1781 | .4669 | .8730 |
| | 125.00 | .4829 | -1.1001 | -.1514 | .6241 | 1.0266 | .4610 | -1.0640 | -.1613 | .6072 | .9879 |
| | 130.00 | .4100 | -1.3017 | -.1152 | .7337 | 1.1508 | .3937 | -1.2748 | -.1328 | .7234 | 1.1210 |
| | 135.00 | .3115 | -1.4435 | -.0560 | .8004 | 1.2410 | .3024 | -1.4472 | -.0801 | .8095 | 1.2371 |

TABLE I.- AERODYNAMIC CHARACTERISTICS OF MODELS - Continued

| Configuration | α, deg | $M_\infty = 3.5$ $C_N$ | $C_A$ | $C_m$ | $C_L$ | $C_D$ | $M_\infty = 4.2$ $C_N$ | $C_A$ | $C_m$ | $C_L$ | $C_D$ |
|---|---|---|---|---|---|---|---|---|---|---|---|
| 1221 | -5.00 | -.0859 | .6493 | .0018 | -.0290 | .6543 | -.0817 | .6390 | .0007 | -.0257 | .6437 |
| | -3.00 | -.0490 | .6528 | .0006 | -.0147 | .6545 | -.0458 | .6452 | -.0006 | -.0119 | .6467 |
| | -1.00 | -.0122 | .6567 | -.0010 | -.0007 | .6568 | -.0093 | .6479 | -.0021 | .0020 | .6480 |
| | .00 | .0075 | .6587 | -.0019 | .0075 | .6587 | .0072 | .6482 | -.0024 | .0072 | .6482 |
| | 1.00 | .0230 | .6589 | -.0026 | .0115 | .6592 | .0249 | .6493 | -.0033 | .0136 | .6496 |
| | 3.00 | .0562 | .6592 | -.0040 | .0216 | .6612 | .0581 | .6488 | -.0042 | .0240 | .6509 |
| | 5.00 | .0921 | .6569 | -.0056 | .0345 | .6624 | .0935 | .6486 | -.0052 | .0366 | .6542 |
| | 10.00 | .1829 | .6640 | -.0096 | .0648 | .6857 | .1832 | .6515 | -.0089 | .0673 | .6734 |
| | 15.00 | .2762 | .6707 | -.0145 | .0932 | .7193 | .2754 | .6531 | -.0132 | .0970 | .7021 |
| | 20.00 | .3744 | .6776 | -.0203 | .1200 | .7648 | .3714 | .6551 | -.0190 | .1249 | .7426 |
| | 17.00 | .3388 | .6780 | -.0191 | .1258 | .7475 | .3123 | .6378 | -.0152 | .1122 | .7012 |
| | 20.00 | .4017 | .6773 | -.0229 | .1458 | .7739 | .3757 | .6456 | -.0174 | .1322 | .7352 |
| | 25.00 | .5088 | .6832 | -.0313 | .1724 | .8342 | .4799 | .6439 | -.0256 | .1628 | .7864 |
| | 30.00 | .6090 | .6842 | -.0392 | .1853 | .8970 | .5698 | .6506 | -.0305 | .1682 | .8483 |
| | 35.00 | .7067 | .6833 | -.0451 | .1870 | .9650 | .6709 | .6494 | -.0408 | .1771 | .9168 |
| | 40.00 | .7898 | .6818 | -.0511 | .1667 | 1.0300 | .7516 | .6426 | -.0470 | .1627 | .9754 |
| | 45.00 | .8526 | .6670 | -.0535 | .1313 | 1.0745 | .8131 | .6272 | -.0506 | .1315 | 1.0185 |
| | 50.00 | .8873 | .6391 | -.0543 | .0807 | 1.0905 | .8477 | .6004 | -.0509 | .0850 | 1.0353 |
| | 45.00 | .8088 | .6186 | -.0647 | .1345 | 1.0093 | .7843 | .6079 | -.0596 | .1247 | .9845 |
| | 50.00 | .8516 | .5926 | -.0668 | .0934 | 1.0333 | .8296 | .5834 | -.0580 | .0864 | 1.0105 |
| | 55.00 | .8691 | .5624 | -.0694 | .0378 | 1.0345 | .8518 | .5585 | -.0617 | .0311 | 1.0181 |
| | 60.00 | .8757 | .5359 | -.0736 | -.0262 | 1.0264 | .8626 | .5283 | -.0663 | -.0262 | 1.0112 |
| | 65.00 | .8816 | .5019 | -.0772 | -.0823 | 1.0111 | .8672 | .5003 | -.0681 | -.0869 | .9974 |
| | 70.00 | .8756 | .4613 | -.0794 | -.1340 | .9806 | .8658 | .4591 | -.0710 | -.1353 | .9706 |
| | 75.00 | .8643 | .4139 | -.0840 | -.1761 | .9420 | .8529 | .4137 | -.0751 | -.1789 | .9309 |
| | 79.00 | .8527 | .3684 | -.0881 | -.1989 | .9073 | .8385 | .3767 | -.0768 | -.2098 | .8950 |
| | 75.00 | .8161 | .3945 | -.0747 | -.1699 | .8904 | .8249 | .4041 | -.0690 | -.1768 | .9014 |
| | 80.00 | .7962 | .3448 | -.0784 | -.2013 | .8440 | .8103 | .3557 | -.0744 | -.2096 | .8598 |
| | 85.00 | .7659 | .2846 | -.0797 | -.2167 | .7878 | .7831 | .2979 | -.0753 | -.2285 | .8061 |
| | 90.00 | .7447 | .2175 | -.0805 | -.2175 | .7447 | .7579 | .2352 | -.0761 | -.2352 | .7579 |
| | 95.00 | .7250 | .1481 | -.0801 | -.2107 | .7093 | .7249 | .1659 | -.0754 | -.2285 | .7076 |
| | 100.00 | .6878 | .0496 | -.0788 | -.1682 | .6688 | .6869 | .0758 | -.0749 | -.1939 | .6633 |
| | 105.00 | .6623 | -.0695 | -.0779 | -.1043 | .6577 | .6493 | -.0362 | -.0741 | -.1331 | .6366 |
| | 110.00 | .6204 | -.2229 | -.0739 | -.0027 | .6592 | .6058 | -.1897 | -.0703 | -.0289 | .6342 |
| | 107.00 | .6514 | -.1116 | -.0776 | -.0837 | .6555 | .6204 | -.0821 | -.0698 | -.1029 | .6173 |
| | 110.00 | .6267 | -.2092 | -.0742 | -.0177 | .6605 | .5964 | -.1837 | -.0677 | -.0314 | .6232 |
| | 115.00 | .5770 | -.3923 | -.0646 | .1116 | .6887 | .5449 | -.3628 | -.0604 | .0985 | .6471 |
| | 120.00 | .5200 | -.6020 | -.0549 | .2613 | .7513 | .4858 | -.5567 | -.0505 | .2392 | .6991 |
| | 125.00 | .4596 | -.7940 | -.0402 | .3868 | .8319 | .4161 | -.7590 | -.0364 | .3830 | .7761 |
| | 130.00 | .3894 | -.9994 | -.0202 | .5153 | .9407 | .3508 | -.9602 | -.0188 | .5101 | .8859 |
| | 135.00 | .3197 | -1.1819 | -.0008 | .6096 | 1.0618 | .2813 | -1.1440 | -.0013 | .6100 | 1.0078 |
| | 140.00 | .2586 | -1.3292 | .0155 | .6563 | 1.1844 | .2231 | -1.3026 | .0144 | .6664 | 1.1412 |
| | 135.00 | .2647 | -1.2000 | -.0071 | .6613 | 1.0357 | .2513 | -1.1555 | -.0074 | .6394 | .9948 |
| | 140.00 | .1987 | -1.3539 | .0108 | .7181 | 1.1648 | .1891 | -1.3032 | .0099 | .6928 | 1.1199 |
| | 145.00 | .1413 | -1.4448 | .0171 | .7130 | 1.2645 | .1394 | -1.4150 | .0206 | .6974 | 1.2391 |
| | 150.00 | .1039 | -1.5261 | .0245 | .6731 | 1.3736 | .1022 | -1.5044 | .0264 | .6637 | 1.3539 |
| | 155.00 | .0739 | -1.5932 | .0259 | .6063 | 1.4751 | .0751 | -1.5719 | .0282 | .5962 | 1.4563 |
| | 160.00 | .0452 | -1.6307 | .0240 | .5152 | 1.5479 | .0503 | -1.6369 | .0304 | .5126 | 1.5554 |
| | 165.00 | .0208 | -1.6738 | .0200 | .4131 | 1.6222 | .0318 | -1.6726 | .0270 | .4022 | 1.6238 |
| | 169.00 | .0042 | -1.6982 | .0142 | .3199 | 1.6678 | .0150 | -1.6924 | .0200 | .3082 | 1.6642 |
| | 165.00 | .0163 | -1.6257 | .0212 | .4051 | 1.5745 | .0260 | -1.6398 | .0231 | .3993 | 1.5906 |
| | 170.00 | -.0026 | -1.6527 | .0145 | .2896 | 1.6271 | .0085 | -1.6816 | .0170 | .2836 | 1.6576 |
| | 175.00 | -.0104 | -1.6687 | .0090 | .1558 | 1.6615 | .0000 | -1.6957 | .0103 | .1478 | 1.6893 |
| | 177.00 | -.0106 | -1.6744 | .0062 | .0982 | 1.6715 | -.0017 | -1.7034 | .0065 | .0909 | 1.7010 |
| | 179.00 | -.0090 | -1.6839 | .0037 | .0384 | 1.6834 | .0009 | -1.7058 | .0034 | .0289 | 1.7055 |
| | 180.00 | -.0068 | -1.6883 | .0022 | .0068 | 1.6883 | .0031 | -1.7099 | .0013 | -.0031 | 1.7099 |
| | 181.00 | -.0041 | -1.6906 | .0003 | -.0254 | 1.6904 | .0044 | -1.7074 | -.0011 | -.0342 | 1.7070 |
| | 183.00 | .0006 | -1.6915 | -.0029 | -.0891 | 1.6892 | .0067 | -1.7070 | -.0045 | -.0960 | 1.7043 |
| | 185.00 | .0032 | -1.6954 | -.0053 | -.1510 | 1.6887 | .0068 | -1.7035 | -.0125 | -.1553 | 1.6964 |
| 1222 | 17.00 | .3137 | .6839 | -.0124 | .1000 | .7457 | .2928 | .6584 | -.0074 | .0875 | .7152 |
| | 20.00 | .3724 | .6836 | -.0162 | .1161 | .7698 | .3528 | .6591 | -.0121 | .1061 | .7400 |
| | 25.00 | .4845 | .6927 | -.0247 | .1464 | .8326 | .4557 | .6626 | -.0201 | .1330 | .7931 |
| | 30.00 | .5880 | .6932 | -.0319 | .1626 | .8943 | .5561 | .6605 | -.0282 | .1513 | .8501 |
| | 35.00 | .6791 | .6877 | -.0397 | .1618 | .9528 | .6501 | .6593 | -.0356 | .1543 | .9130 |
| | 40.00 | .7730 | .6909 | -.0460 | .1480 | 1.0262 | .7309 | .6502 | -.0417 | .1420 | .9679 |
| | 45.00 | .8254 | .6707 | -.0470 | .1093 | 1.0579 | .7971 | .6363 | -.0467 | .1137 | 1.0135 |
| | 50.00 | .8638 | .6453 | -.0489 | .0609 | 1.0765 | .8323 | .6087 | -.0462 | .0687 | 1.0289 |
| | 45.00 | .8046 | .6173 | -.0534 | .1324 | 1.0054 | .7812 | .6063 | -.0498 | .1237 | .9811 |
| | 50.00 | .8487 | .5954 | -.0546 | .0894 | 1.0328 | .8250 | .5853 | -.0515 | .0819 | 1.0082 |
| | 55.00 | .8733 | .5643 | -.0577 | .0387 | 1.0391 | .8524 | .5606 | -.0549 | .0297 | 1.0197 |
| | 60.00 | .8783 | .5334 | -.0617 | -.0227 | 1.0273 | .8606 | .5333 | -.0590 | -.0315 | 1.0120 |
| | 65.00 | .8799 | .4972 | -.0643 | -.0787 | 1.0076 | .8639 | .4965 | -.0620 | -.0849 | .9928 |
| | 70.00 | .8758 | .4552 | -.0648 | -.1282 | .9787 | .8593 | .4549 | -.0631 | -.1336 | .9631 |
| | 75.00 | .8677 | .4017 | -.0657 | -.1634 | .9421 | .8479 | .4065 | -.0649 | -.1732 | .9242 |
| | 79.00 | .8606 | .3562 | -.0654 | -.1855 | .9128 | .8366 | .3619 | -.0654 | -.1957 | .8903 |
| | 75.00 | .8016 | .3844 | -.0683 | -.1638 | .8738 | .8154 | .3925 | -.0650 | -.1681 | .8892 |
| | 80.00 | .7825 | .3299 | -.0676 | -.1890 | .8279 | .7953 | .3378 | -.0642 | -.1946 | .8419 |
| | 85.00 | .7690 | .2660 | -.0653 | -.1980 | .7893 | .7836 | .2731 | -.0636 | -.2038 | .8044 |
| | 90.00 | .7531 | .1969 | -.0604 | -.1969 | .7531 | .7638 | .2044 | -.0607 | -.2044 | .7638 |
| | 95.00 | .7361 | .1089 | -.0542 | -.1727 | .7238 | .7383 | .1212 | -.0546 | -.1851 | .7249 |
| | 100.00 | .7200 | .0083 | -.0446 | -.1332 | .7077 | .7149 | .0232 | -.0447 | -.1469 | .7000 |
| | 105.00 | .7049 | -.1031 | -.0330 | -.0828 | .7076 | .6913 | -.0850 | -.0330 | -.0968 | .6897 |
| | 110.00 | .6774 | -.2262 | -.0199 | -.0191 | .7139 | .6587 | -.2103 | -.0188 | -.0277 | .6909 |

TABLE I.- AERODYNAMIC CHARACTERISTICS OF MODELS - Continued

| Configuration | α, deg | $M_\infty = 3.5$ $C_N$ | $C_A$ | $C_m$ | $C_L$ | $C_D$ | $M_\infty = 4.2$ $C_N$ | $C_A$ | $C_m$ | $C_L$ | $C_D$ |
|---|---|---|---|---|---|---|---|---|---|---|---|
| 1222 | 107.00 | .7056 | -.1426 | -.0288 | -.0699 | .7165 | .6646 | -.1221 | -.0257 | -.0775 | .6713 |
| | 110.00 | .6870 | -.2224 | -.0198 | -.0260 | .7217 | .6502 | -.2031 | -.0166 | -.0315 | .6805 |
| | 115.00 | .6409 | -.3471 | -.0064 | .0437 | .7276 | .6041 | -.3373 | -.0026 | .0504 | .6900 |
| | 120.00 | .5814 | -.4935 | .0082 | .1367 | .7503 | .5449 | -.4683 | .0120 | .1331 | .7061 |
| | 125.00 | .5177 | -.6246 | .0210 | .2147 | .7824 | .4742 | -.6017 | .0250 | .2209 | .7335 |
| | 130.00 | .4390 | -.7682 | .0349 | .3063 | .8301 | .4014 | -.7491 | .0378 | .3158 | .7890 |
| | 135.00 | .3688 | -.9127 | .0444 | .3846 | .9062 | .3341 | -.8851 | .0463 | .3897 | .8621 |
| | 140.00 | .3029 | -1.0398 | .0508 | .4364 | .9912 | .2735 | -1.0064 | .0510 | .4374 | .9467 |
| | 135.00 | .3130 | -.9161 | .0440 | .4265 | .8691 | .3019 | -.8738 | .0466 | .4044 | .8314 |
| | 140.00 | .2513 | -1.0516 | .0484 | .4835 | .9671 | .2413 | -1.0110 | .0506 | .4651 | .9296 |
| | 145.00 | .1959 | -1.1836 | .0453 | .5184 | 1.0819 | .1936 | -1.1351 | .0495 | .4925 | 1.0408 |
| | 150.00 | .1465 | -1.2957 | .0438 | .5210 | 1.1954 | .1543 | -1.2491 | .0481 | .4910 | 1.1589 |
| | 155.00 | .1153 | -1.3683 | .0398 | .4738 | 1.2888 | .1201 | -1.3507 | .0442 | .4620 | 1.2750 |
| | 160.00 | .0839 | -1.4542 | .0357 | .4186 | 1.3952 | .0876 | -1.4372 | .0390 | .4093 | 1.3805 |
| | 165.00 | .0506 | -1.5315 | .0264 | .3475 | 1.4924 | .0590 | -1.5136 | .0313 | .3347 | 1.4773 |
| | 169.00 | .0272 | -1.5697 | .0195 | .2728 | 1.5461 | .0367 | -1.5517 | .0242 | .2601 | 1.5302 |
| | 165.00 | | | | | | .0533 | -1.4905 | .0287 | .3343 | 1.4535 |
| | 170.00 | .0202 | -1.5257 | .0183 | .2450 | 1.5060 | .0290 | -1.5351 | .0213 | .2380 | 1.5168 |
| | 175.00 | .0017 | -1.5531 | .0117 | .1337 | 1.5473 | .0104 | -1.5640 | .0136 | .1259 | 1.5590 |
| | 177.00 | -.0047 | -1.5637 | .0089 | .0865 | 1.5614 | .0036 | -1.5749 | .0092 | .0788 | 1.5729 |
| | 179.00 | -.0087 | -1.5681 | .0049 | .0361 | 1.5677 | .0002 | -1.5807 | .0054 | .0274 | 1.5805 |
| | 180.00 | -.0066 | -1.5699 | .0038 | .0066 | 1.5699 | .0067 | -1.5834 | .0022 | -.0067 | 1.5834 |
| | 181.00 | .0008 | -1.5747 | .0002 | -.0283 | 1.5745 | .0015 | -1.5847 | -.0003 | -.0292 | 1.5845 |
| | 183.00 | .0075 | -1.5760 | -.0099 | -.0900 | 1.5734 | .0075 | -1.5932 | -.0084 | -.0909 | 1.5906 |
| | 185.00 | .0029 | -1.5760 | -.0118 | -.1403 | 1.5697 | .0011 | -1.5774 | -.0112 | -.1386 | 1.5713 |
| 1223 | 17.00 | .3434 | .6760 | -.0211 | .1308 | .7469 | .3184 | .6497 | -.0150 | .1145 | .7144 |
| | 20.00 | .4094 | .6777 | -.0261 | .1529 | .7768 | .3837 | .6494 | -.0188 | .1385 | .7414 |
| | 25.00 | .5093 | .6786 | -.0317 | .1748 | .8302 | .4806 | .6508 | -.0260 | .1606 | .7929 |
| | 30.00 | .6082 | .6809 | -.0388 | .1862 | .8938 | .5782 | .6498 | -.0338 | .1758 | .8518 |
| | 35.00 | .7044 | .6798 | -.0471 | .1871 | .9609 | .6696 | .6462 | -.0424 | .1779 | .9134 |
| | 40.00 | .7876 | .6728 | -.0526 | .1708 | 1.0217 | .7558 | .6414 | -.0487 | .1667 | .9771 |
| | 45.00 | .8551 | .6649 | -.0557 | .1344 | 1.0748 | .8148 | .6264 | -.0523 | .1333 | 1.0191 |
| | 50.00 | .8899 | .6386 | -.0566 | .0828 | 1.0922 | .8512 | .6015 | -.0532 | .0863 | 1.0387 |
| | 45.00 | .8065 | .6195 | -.0540 | .1322 | 1.0084 | .7856 | .6084 | -.0514 | .1253 | .9857 |
| | 50.00 | .8470 | .5896 | -.0572 | .0927 | 1.0278 | .8249 | .5890 | -.0527 | .0790 | 1.0105 |
| | 55.00 | .8687 | .5624 | -.0590 | .0376 | 1.0342 | .8502 | .5636 | -.0557 | .0260 | 1.0197 |
| | 60.00 | .8769 | .5366 | -.0626 | -.0262 | 1.0277 | .8620 | .5360 | -.0598 | -.0332 | 1.0145 |
| | 65.00 | .8782 | .5006 | -.0667 | -.0826 | 1.0075 | .8640 | .5015 | -.0634 | -.0894 | .9950 |
| | 70.00 | .8741 | .4564 | -.0723 | -.1299 | .9775 | .8585 | .4605 | -.0683 | -.1391 | .9642 |
| | 75.00 | .8673 | .4006 | -.0828 | -.1625 | .9415 | .8508 | .4083 | -.0779 | -.1742 | .9275 |
| | 79.00 | .8616 | .3541 | -.0909 | -.1832 | .9134 | .8370 | .3657 | -.0841 | -.1993 | .8914 |
| | 75.00 | .8120 | .3948 | -.0812 | -.1711 | .8865 | .8242 | .4002 | -.0777 | -.1733 | .8997 |
| | 80.00 | .7988 | .3386 | -.0905 | -.1948 | .8455 | .8075 | .3434 | -.0856 | -.1980 | .8548 |
| | 85.00 | .7793 | .2729 | -.1000 | -.2040 | .8001 | .7850 | .2821 | -.0933 | -.2126 | .8066 |
| | 90.00 | .7626 | .2113 | -.1060 | -.2113 | .7626 | .7630 | .2201 | -.0999 | -.2201 | .7630 |
| | 95.00 | .7388 | .1246 | -.1147 | -.1885 | .7251 | .7325 | .1477 | -.1063 | -.2109 | .7168 |
| | 100.00 | .7152 | .0165 | -.1276 | -.1404 | .7014 | .7030 | .0413 | -.1203 | -.1628 | .6851 |
| | 105.00 | .6984 | -.1183 | -.1445 | -.0665 | .7052 | .6821 | -.0904 | -.1391 | -.0892 | .6823 |
| | 110.00 | .6771 | -.3132 | -.1641 | .0627 | .7434 | .6593 | -.2922 | -.1661 | .0491 | .7194 |
| | 107.00 | .7022 | -.1808 | -.1521 | -.0324 | .7244 | .6641 | -.1597 | -.1479 | -.0415 | .6818 |
| | 110.00 | .6840 | -.3086 | -.1634 | .0561 | .7482 | .6502 | -.2877 | -.1627 | .0479 | .7094 |
| | 115.00 | .6547 | -.5340 | -.1832 | .2073 | .8191 | .6448 | -.5710 | -.2118 | .2450 | .8257 |
| | 120.00 | .6273 | -.8465 | -.2089 | .4194 | .9666 | .5913 | -.7977 | -.2072 | .3951 | .9110 |
| | 125.00 | .5566 | -1.0599 | -.1766 | .5489 | 1.0638 | .5191 | -1.0182 | -.1837 | .5364 | 1.0092 |
| | 130.00 | .4672 | -1.2694 | -.1314 | .6721 | 1.1739 | .4356 | -1.2301 | -.1420 | .6623 | 1.1244 |
| | 135.00 | .3688 | -1.4185 | -.0683 | .7422 | 1.2638 | .3364 | -1.3883 | -.0827 | .7438 | 1.2196 |
| | 140.00 | .2732 | -1.4923 | -.0066 | .7499 | 1.3188 | .2428 | -1.4685 | -.0189 | .7579 | 1.2810 |
| | 135.00 | .3154 | -1.4261 | -.0658 | .7854 | 1.2314 | .3158 | -1.4123 | -.0912 | .7754 | 1.2220 |
| | 140.00 | .2132 | -1.4894 | -.0030 | .7941 | 1.2779 | .2125 | -1.4904 | -.0231 | .7952 | 1.2783 |
| | 145.00 | .1465 | -1.5547 | .0166 | .7717 | 1.3575 | .1425 | -1.5368 | .0154 | .7648 | 1.3406 |
| | 150.00 | .0992 | -1.5972 | .0254 | .7127 | 1.4328 | .0943 | -1.5912 | .0275 | .7139 | 1.4252 |
| | 155.00 | .0646 | -1.6437 | .0302 | .6362 | 1.5170 | .0643 | -1.6376 | .0346 | .6338 | 1.5114 |
| | 160.00 | .0377 | -1.6701 | .0282 | .5358 | 1.5823 | .0390 | -1.6697 | .0328 | .5345 | 1.5823 |
| | 165.00 | .0158 | -1.7191 | .0192 | .4296 | 1.6646 | .0174 | -1.7124 | .0267 | .4264 | 1.6586 |
| | 169.00 | .0030 | -1.7378 | .0139 | .3287 | 1.7065 | .0057 | -1.7255 | .0204 | .3236 | 1.6949 |
| | 165.00 | .0065 | -1.6564 | .0259 | .4224 | 1.6017 | .0156 | -1.6818 | .0274 | .4202 | 1.6285 |
| | 170.00 | -.0104 | -1.6781 | .0182 | .3016 | 1.6508 | .0021 | -1.7022 | .0195 | .2935 | 1.6767 |
| | 175.00 | -.0139 | -1.6928 | .0114 | .1613 | 1.6852 | -.0028 | -1.7125 | .0111 | .1521 | 1.7058 |
| | 177.00 | -.0115 | -1.6973 | .0086 | .1003 | 1.6944 | -.0004 | -1.7190 | .0074 | .0904 | 1.7166 |
| | 179.00 | -.0082 | -1.7061 | .0058 | .0380 | 1.7057 | .0031 | -1.7355 | .0032 | .0272 | 1.7353 |
| | 180.00 | -.0077 | -1.7114 | .0040 | .0077 | 1.7114 | .0061 | -1.7353 | .0015 | -.0061 | 1.7353 |
| | 181.00 | -.0028 | -1.7128 | .0023 | -.0271 | 1.7125 | .0072 | -1.7226 | -.0007 | -.0373 | 1.7222 |
| | 183.00 | .0000 | -1.7126 | -.0008 | -.0896 | 1.7103 | .0097 | -1.7333 | -.0043 | -.1004 | 1.7304 |
| | 185.00 | .0025 | -1.7170 | -.0040 | -.1522 | 1.7103 | .0121 | -1.7245 | -.0131 | -.1624 | 1.7168 |

TABLE I. - AERODYNAMIC CHARACTERISTICS OF MODELS - Continued

| Configuration | α, deg | $M_\infty = 3.5$ $C_N$ | $C_A$ | $C_m$ | $C_L$ | $C_D$ | $M_\infty = 4.2$ $C_N$ | $C_A$ | $C_m$ | $C_L$ | $C_D$ |
|---|---|---|---|---|---|---|---|---|---|---|---|
| 2221 | -5.00 | -.0844 | .6356 | .0013 | -.0287 | .6406 | -.0830 | .6369 | .0007 | -.0272 | .6417 |
| | -3.00 | -.0493 | .6388 | | -.0158 | .6405 | -.0459 | .6402 | -.0008 | -.0123 | .6417 |
| | -1.00 | -.0135 | .6440 | -.0009 | -.0023 | .6441 | -.0110 | .6419 | -.0012 | .0002 | .6420 |
| | .00 | .0034 | .6468 | -.0010 | .0034 | .6468 | .0038 | .6419 | -.0019 | .0038 | .6419 |
| | 1.00 | .0210 | .6485 | -.0020 | .0097 | .6488 | .0198 | .6420 | -.0024 | .0086 | .6422 |
| | 3.00 | .0560 | .6503 | -.0035 | .0219 | .6523 | .0518 | .6427 | -.0030 | .0181 | .6445 |
| | 5.00 | .0894 | .6519 | -.0043 | .0323 | .6572 | .0873 | .6440 | -.0039 | .0309 | .6492 |
| | 10.00 | .1812 | .6620 | -.0064 | .0634 | .6834 | .1717 | .6492 | -.0061 | .0564 | .6691 |
| | 15.00 | .2769 | .6760 | -.0107 | .0925 | .7247 | .2674 | .6576 | -.0102 | .0881 | .7044 |
| | 20.00 | .3847 | .6943 | -.0156 | .1240 | .7840 | .3761 | .6758 | -.0155 | .1223 | .7636 |
| | 17.00 | .3272 | .6852 | -.0124 | .1126 | .7510 | .3084 | .6523 | -.0114 | .1042 | .7140 |
| | 20.00 | .3918 | .6940 | -.0144 | .1308 | .7861 | .3745 | .6636 | -.0132 | .1249 | .7517 |
| | 25.00 | .5090 | .7105 | -.0197 | .1610 | .8590 | .4866 | .6772 | -.0188 | .1548 | .8194 |
| | 30.00 | .6195 | .7196 | -.0242 | .1767 | .9330 | .5881 | .6835 | -.0217 | .1675 | .8860 |
| | 35.00 | .7221 | .7282 | -.0265 | .1738 | 1.0107 | .6881 | .6908 | -.0254 | .1675 | .9606 |
| | 40.00 | .8040 | .7261 | -.0276 | .1492 | 1.0730 | .7707 | .6833 | -.0269 | .1512 | 1.0188 |
| | 45.00 | .8735 | .7090 | -.0283 | .1164 | 1.1190 | .8394 | .6635 | -.0287 | .1243 | 1.0627 |
| | 50.00 | .9068 | .6657 | -.0257 | .0729 | 1.1225 | .8776 | .6243 | -.0264 | .0859 | 1.0736 |
| | 45.00 | .8328 | .6429 | -.0342 | .1343 | 1.0435 | .8058 | .6298 | -.0325 | .1245 | 1.0151 |
| | 50.00 | .8811 | .6151 | -.0347 | .0952 | 1.0704 | .8529 | .5992 | -.0324 | .0892 | 1.0386 |
| | 55.00 | .9033 | .5726 | -.0366 | .0491 | 1.0683 | .8809 | .5580 | -.0337 | .0482 | 1.0417 |
| | 60.00 | .9081 | .5385 | -.0393 | -.0123 | 1.0557 | .8922 | .5233 | -.0355 | -.0071 | 1.0344 |
| | 65.00 | .9181 | .5037 | -.0402 | -.0685 | 1.0450 | .9019 | .4905 | -.0379 | -.0633 | 1.0247 |
| | 70.00 | .9201 | .4552 | -.0443 | -.1130 | 1.0203 | .9037 | .4482 | -.0406 | -.1121 | 1.0025 |
| | 75.00 | .9131 | .4109 | -.0485 | -.1606 | .9883 | .8940 | .4045 | -.0450 | -.1593 | .9682 |
| | 79.00 | .9028 | .3669 | -.0535 | -.1879 | .9562 | .8800 | .3658 | -.0494 | -.1912 | .9336 |
| | 75.00 | .8678 | .4078 | -.0471 | -.1693 | .9437 | .8677 | .3950 | -.0460 | -.1569 | .9403 |
| | 80.00 | .8541 | .3574 | -.0519 | -.2037 | .9032 | .8590 | .3484 | -.0505 | -.1939 | .9065 |
| | 85.00 | .8328 | .2976 | -.0553 | -.2239 | .8555 | .8400 | .2950 | -.0535 | -.2207 | .8625 |
| | 90.00 | .8231 | .2364 | -.0568 | -.2364 | .8231 | .8197 | .2367 | -.0549 | -.2367 | .8197 |
| | 95.00 | .8017 | .1602 | -.0564 | -.2295 | .7847 | .7926 | .1702 | -.0547 | -.2387 | .7748 |
| | 100.00 | .7755 | .0692 | -.0562 | -.2028 | .7517 | .7582 | .0862 | -.0536 | -.2166 | .7317 |
| | 105.00 | .7387 | -.0517 | -.0549 | -.1413 | .7269 | .7190 | -.0211 | -.0531 | -.1657 | .7000 |
| | 110.00 | .6967 | -.2029 | -.0515 | -.0476 | .7241 | .6720 | -.1723 | -.0510 | -.0679 | .6904 |
| | 107.00 | .7290 | -.0893 | -.0548 | -.1277 | .7232 | .6819 | -.0736 | -.0510 | -.1290 | .6736 |
| | 110.00 | .7013 | -.1948 | -.0529 | -.0568 | .7256 | .6515 | -.1705 | -.0486 | -.0626 | .6705 |
| | 115.00 | .6452 | -.3723 | -.0457 | .0647 | .7421 | .6023 | -.3528 | -.0435 | .0652 | .6950 |
| | 120.00 | .5852 | -.5674 | -.0366 | .1988 | .7905 | .5398 | -.5398 | -.0347 | .1976 | .7374 |
| | 125.00 | .5177 | -.7727 | -.0239 | .3361 | .8673 | .4702 | -.7412 | -.0223 | .3375 | .8103 |
| | 130.00 | .4402 | -.9818 | -.0053 | .4691 | .9683 | .3940 | -.9452 | -.0065 | .4708 | .9094 |
| | 135.00 | .3632 | -1.1636 | .0113 | .5660 | 1.0796 | .3166 | -1.1318 | .0087 | .5764 | 1.0242 |
| | 140.00 | .2905 | -1.3017 | .0254 | .6142 | 1.1839 | .2492 | -1.2748 | .0214 | .6285 | 1.1367 |
| | 135.00 | .2961 | -1.1984 | .0006 | .6380 | 1.0568 | .2858 | -1.1502 | .0021 | .6112 | 1.0154 |
| | 140.00 | .2198 | -1.3337 | .0149 | .6889 | 1.1630 | .2147 | -1.2995 | .0158 | .6708 | 1.1335 |
| | 145.00 | .1551 | -1.4411 | .0225 | .6995 | 1.2695 | .1571 | -1.4178 | .0249 | .6845 | 1.2515 |
| | 150.00 | .1104 | -1.5016 | .0252 | .6552 | 1.3556 | .1135 | -1.5055 | .0296 | .6545 | 1.3606 |
| | 155.00 | .0793 | -1.5671 | .0268 | .5904 | 1.4538 | .0840 | -1.5629 | .0310 | .5844 | 1.4520 |
| | 160.00 | .0500 | -1.6217 | .0262 | .5077 | 1.5410 | .0573 | -1.6155 | .0302 | .4987 | 1.5377 |
| | 165.00 | .0261 | -1.6639 | .0209 | .4055 | 1.6140 | .0366 | -1.6596 | .0266 | .3941 | 1.6126 |
| | 169.00 | .0069 | -1.6902 | .0140 | .3157 | 1.6605 | .0211 | -1.6797 | .0203 | .2998 | 1.6528 |
| 2222 | 45.00 | .8337 | .6462 | -.0349 | .1326 | 1.0464 | .8038 | .6335 | -.0324 | .1204 | 1.0164 |
| | 50.00 | .8728 | .6093 | -.0344 | .0943 | 1.0603 | .8521 | .6017 | -.0321 | .0868 | 1.0395 |
| | 55.00 | .8955 | .5658 | -.0366 | .0501 | 1.0580 | .8729 | .5590 | -.0321 | .0428 | 1.0356 |
| | 60.00 | .9002 | .5300 | -.0381 | -.0089 | 1.0446 | .8971 | .5283 | -.0354 | -.0089 | 1.0411 |
| | 65.00 | .9080 | .4890 | -.0398 | -.0595 | 1.0296 | .9006 | .4872 | -.0366 | -.0610 | 1.0221 |
| | 70.00 | .9116 | .4400 | -.0410 | -.1017 | 1.0071 | .9030 | .4419 | -.0379 | -.1064 | .9996 |
| | 75.00 | .9122 | .3921 | -.0426 | -.1426 | .9826 | .8963 | .3990 | -.0393 | -.1534 | .9691 |
| | 79.00 | .9056 | .3457 | -.0438 | -.1665 | .9550 | .8840 | .3554 | -.0406 | -.1802 | .9356 |
| | 75.00 | .8533 | .3609 | -.0490 | -.1277 | .9176 | .8773 | .3746 | -.0427 | -.1347 | .9444 |
| | 80.00 | .8449 | .3072 | -.0491 | -.1558 | .8854 | .8665 | .3197 | -.0428 | -.1643 | .9088 |
| | 85.00 | .8369 | .2427 | -.0476 | -.1689 | .8549 | .8534 | .2611 | -.0427 | -.1857 | .8730 |
| | 90.00 | .8271 | .1765 | -.0441 | -.1765 | .8271 | .8364 | .1945 | -.0403 | -.1945 | .8364 |
| | 95.00 | .8145 | .0923 | -.0382 | -.1629 | .8034 | .8141 | .1120 | -.0361 | -.1826 | .8012 |
| | 100.00 | .8018 | -.0048 | -.0285 | -.1345 | .7904 | .7931 | .0200 | -.0272 | -.1574 | .7776 |
| | 105.00 | .7815 | -.1165 | -.0161 | -.0898 | .7851 | .7654 | -.0917 | -.0150 | -.1095 | .7630 |
| | 110.00 | .7511 | -.2381 | -.0038 | -.0332 | .7872 | .7296 | -.2128 | -.0023 | -.0495 | .7584 |
| | 107.00 | .7885 | -.1275 | -.0068 | -.1086 | .7913 | .7431 | -.1135 | -.0067 | -.1088 | .7438 |
| | 110.00 | .7652 | -.2030 | .0006 | -.0709 | .7885 | .7239 | -.1941 | .0016 | -.0652 | .7466 |
| | 115.00 | .7138 | -.3316 | .0129 | -.0012 | .7870 | .6716 | -.3203 | .0140 | .0065 | .7441 |
| | 120.00 | .6490 | -.4690 | .0254 | .0817 | .7965 | .6050 | -.4575 | .0271 | .0937 | .7527 |
| | 125.00 | .5799 | -.6006 | .0362 | .1594 | .8195 | .5310 | -.5892 | .0391 | .1780 | .7730 |
| | 130.00 | .4970 | -.7493 | .0467 | .2545 | .8623 | .4493 | -.7332 | .0489 | .2729 | .8155 |
| | 135.00 | .4094 | -.8924 | .0553 | .3415 | .9205 | .3714 | -.8713 | .0562 | .3535 | .8787 |
| | 140.00 | .3361 | -1.0224 | .0584 | .3997 | .9992 | .2999 | -1.0009 | .0587 | .4137 | .9595 |
| | 135.00 | .3413 | -.9073 | .0472 | .4003 | .8829 | .3353 | -.8680 | .0528 | .3767 | .8509 |
| | 140.00 | .2672 | -1.0494 | .0500 | .4698 | .9757 | .2655 | -1.0070 | .0548 | .4439 | .9421 |
| | 145.00 | .2063 | -1.1788 | .0479 | .5071 | 1.0839 | .2108 | -1.1398 | .0538 | .4811 | 1.0546 |
| | 150.00 | .1629 | -1.2702 | .0460 | .4940 | 1.1815 | .1705 | -1.2452 | .0511 | .4749 | 1.1637 |
| | 155.00 | .1248 | -1.3721 | .0403 | .4668 | 1.2962 | .1305 | -1.3544 | .0447 | .4541 | 1.2827 |
| | 160.00 | .0892 | -1.4535 | .0345 | .4133 | 1.3963 | .0963 | -1.4406 | .0382 | .4022 | 1.3866 |
| | 165.00 | .0540 | -1.5191 | .0250 | .3410 | 1.4813 | .0640 | -1.5132 | .0299 | .3298 | 1.4782 |
| | 169.00 | .0318 | -1.5555 | .0191 | .2656 | 1.5330 | .0421 | -1.5471 | .0233 | .2539 | 1.5267 |

TABLE I.- AERODYNAMIC CHARACTERISTICS OF MODELS - Continued

| Configuration | α, deg | $M_\infty = 3.5$ $C_N$ | $C_A$ | $C_m$ | $C_L$ | $C_D$ | $M_\infty = 4.2$ $C_N$ | $C_A$ | $C_m$ | $C_L$ | $C_D$ |
|---|---|---|---|---|---|---|---|---|---|---|---|
| 2223 | 45.00 | .8365 | .6461 | -.0363 | .1346 | 1.0484 | .8085 | .6333 | -.0331 | .1239 | 1.0195 |
| | 50.00 | .8784 | .6145 | -.0356 | .0939 | 1.0679 | .8550 | .6012 | -.0323 | .0891 | 1.0414 |
| | 55.00 | .8977 | .5723 | -.0354 | .0461 | 1.0637 | .8853 | .5623 | -.0334 | .0472 | 1.0477 |
| | 60.00 | .9053 | .5376 | -.0376 | -.0129 | 1.0528 | .8957 | .5269 | -.0354 | -.0084 | 1.0392 |
| | 65.00 | .9143 | .4987 | -.0400 | -.0656 | 1.0394 | .9024 | .4927 | -.0376 | -.0651 | 1.0261 |
| | 70.00 | .9208 | .4496 | -.0458 | -.1076 | 1.0191 | .9036 | .4485 | -.0421 | -.1125 | 1.0025 |
| | 75.00 | .9181 | .3950 | -.0564 | -.1439 | .9890 | .8986 | .3998 | -.0504 | -.1536 | .9715 |
| | 79.00 | .9119 | .3476 | -.0645 | -.1672 | .9614 | .8878 | .3561 | -.0583 | -.1802 | .9394 |
| | 75.00 | .8671 | .3874 | -.0542 | -.1498 | .9379 | .8751 | .3846 | -.0518 | -.1450 | .9448 |
| | 80.00 | .8601 | .3303 | -.0653 | -.1759 | .9044 | .8652 | .3306 | -.0612 | -.1754 | .9095 |
| | 85.00 | .8482 | .2678 | -.0756 | -.1929 | .8683 | .8500 | .2720 | -.0700 | -.1969 | .8705 |
| | 90.00 | .8346 | .2002 | -.0836 | -.2002 | .8346 | .8306 | .2117 | -.0775 | -.2117 | .8306 |
| | 95.00 | .8175 | .1226 | -.0920 | -.1934 | .8037 | .8037 | .1433 | -.0836 | -.2129 | .7881 |
| | 100.00 | .7963 | .0225 | -.1040 | -.1605 | .7803 | .7787 | .0534 | -.0956 | -.1878 | .7576 |
| | 105.00 | .7770 | -.1203 | -.1231 | -.0849 | .7816 | .7536 | -.0867 | -.1176 | -.1113 | .7503 |
| | 110.00 | .7539 | -.3059 | -.1427 | .0297 | .8130 | .7279 | -.2811 | -.1448 | .0151 | .7801 |
| | 107.00 | .7779 | -.1747 | -.1303 | -.0603 | .7950 | .7391 | -.1517 | -.1260 | -.0710 | .7512 |
| | 110.00 | .7542 | -.2905 | -.1408 | .0150 | .8081 | .7216 | -.2841 | -.1441 | .0202 | .7753 |
| | 115.00 | .7175 | -.5212 | -.1625 | .1692 | .8706 | .7072 | -.5606 | -.1936 | .2092 | .8778 |
| | 120.00 | .6845 | -.8330 | -.1923 | .3791 | 1.0093 | .6486 | -.7860 | -.1909 | .3564 | .9547 |
| | 125.00 | .6113 | -1.0424 | -.1642 | .5033 | 1.0986 | .5699 | -1.0125 | -.1696 | .5025 | 1.0475 |
| | 130.00 | .5153 | -1.2563 | -.1205 | .6312 | 1.2022 | .4794 | -1.2230 | -.1302 | .6287 | 1.1533 |
| | 135.00 | .4086 | -1.4029 | -.0569 | .7031 | 1.2809 | .3785 | -1.3777 | -.0764 | .7066 | 1.2418 |
| | 140.00 | .3104 | -1.4841 | -.0006 | .7162 | 1.3364 | .2761 | -1.4777 | -.0135 | .7384 | 1.3095 |
| | 135.00 | .3430 | -1.4173 | -.0560 | .7597 | 1.2447 | .3490 | -1.3931 | -.0817 | .7383 | 1.2319 |
| | 140.00 | .2389 | -1.4821 | .0006 | .7697 | 1.2889 | .2429 | -1.4900 | -.0173 | .7717 | 1.2975 |
| | 145.00 | .1614 | -1.5392 | .0211 | .7507 | 1.3534 | .1613 | -1.5318 | .0208 | .7465 | 1.3473 |
| | 150.00 | .1118 | -1.5815 | .0272 | .6940 | 1.4255 | .1096 | -1.5821 | .0292 | .6962 | 1.4249 |
| | 155.00 | .0742 | -1.6252 | .0301 | .6196 | 1.5043 | .0750 | -1.6313 | .0331 | .6214 | 1.5102 |
| | 160.00 | .0432 | -1.6601 | .0297 | .5272 | 1.5748 | .0472 | -1.6688 | .0342 | .5264 | 1.5843 |
| | 165.00 | .0216 | -1.6997 | .0224 | .4190 | 1.6474 | .0259 | -1.7048 | .0297 | .4162 | 1.6534 |
| | 169.00 | .0057 | -1.7234 | .0149 | .3232 | 1.6928 | .0138 | -1.7191 | .0237 | .3145 | 1.6901 |
| 3221 | -5.00 | -.0659 | .6443 | -.0046 | -.0094 | .6476 | -.0759 | .6515 | -.0007 | -.0188 | .6556 |
| | -3.00 | -.0308 | .6468 | -.0059 | .0031 | .6475 | -.0279 | .6501 | -.0055 | .0061 | .6507 |
| | -1.00 | .0041 | .6473 | -.0060 | .0154 | .6471 | .0032 | .6525 | -.0056 | .0146 | .6523 |
| | .00 | .0203 | .6492 | -.0065 | .0203 | .6492 | .0193 | .6518 | -.0061 | .0193 | .6518 |
| | 1.00 | .0374 | .6522 | -.0066 | .0260 | .6528 | .0353 | .6514 | -.0062 | .0239 | .6519 |
| | 3.00 | .0695 | .6532 | -.0073 | .0352 | .6559 | .0658 | .6517 | -.0068 | .0316 | .6542 |
| | 5.00 | .1037 | .6573 | -.0081 | .0460 | .6638 | .0980 | .6524 | -.0074 | .0407 | .6584 |
| | 10.00 | .1963 | .6694 | -.0104 | .0771 | .6933 | .1827 | .6601 | -.0093 | .0653 | .6818 |
| | 15.00 | .2920 | .6893 | -.0135 | .1037 | .7414 | .2796 | .6751 | -.0134 | .0954 | .7245 |
| | 20.00 | .4064 | .7150 | -.0185 | .1374 | .8109 | .3899 | .6951 | -.0181 | .1287 | .7866 |
| | 17.00 | .3268 | .7066 | -.0087 | .1059 | .7712 | .3114 | .6722 | -.0092 | .1013 | .7338 |
| | 20.00 | .3947 | .7208 | -.0096 | .1244 | .8123 | .3780 | .6848 | -.0114 | .1210 | .7728 |
| | 25.00 | .5212 | .7437 | -.0158 | .1581 | .8943 | .4955 | .7048 | -.0140 | .1512 | .8482 |
| | 30.00 | .6263 | .7547 | -.0157 | .1650 | .9668 | .5966 | .7223 | -.0150 | .1555 | .9238 |
| | 35.00 | .7326 | .7720 | -.0159 | .1573 | 1.0526 | .6962 | .7301 | -.0151 | .1515 | .9974 |
| | 40.00 | .8171 | .7702 | -.0151 | .1308 | 1.1152 | .7783 | .7200 | -.0148 | .1334 | 1.0518 |
| | 45.00 | .8832 | .7465 | -.0138 | .0966 | 1.1524 | .8445 | .6968 | -.0142 | .1045 | 1.0899 |
| | 50.00 | .9235 | .6981 | -.0103 | .0588 | 1.1561 | .8834 | .6488 | -.0109 | .0708 | 1.0937 |
| | 45.00 | .8550 | .6820 | -.0246 | .1224 | 1.0868 | .8242 | .6642 | -.0232 | .1131 | 1.0525 |
| | 50.00 | .8938 | .6360 | -.0224 | .0873 | 1.0935 | .8679 | .6250 | -.0207 | .0791 | 1.0665 |
| | 55.00 | .9077 | .5898 | -.0224 | .0375 | 1.0818 | .8935 | .5767 | -.0195 | .0401 | 1.0627 |
| | 60.00 | .9235 | .5382 | -.0252 | -.0043 | 1.0689 | .9051 | .5308 | -.0215 | -.0071 | 1.0492 |
| | 65.00 | .9352 | .4889 | -.0272 | -.0479 | 1.0542 | .9200 | .4833 | -.0234 | -.0492 | 1.0381 |
| | 70.00 | .9370 | .4413 | -.0307 | -.0942 | 1.0314 | .9242 | .4397 | -.0265 | -.0971 | 1.0189 |
| | 75.00 | .9320 | .3917 | -.0358 | -.1372 | 1.0016 | .9187 | .3983 | -.0303 | -.1469 | .9905 |
| | 79.00 | .9262 | .3484 | -.0403 | -.1653 | .9757 | .9074 | .3595 | -.0347 | -.1798 | .9593 |
| | 75.00 | .8830 | .3969 | -.0333 | -.1549 | .9556 | .8937 | .3880 | -.0327 | -.1435 | .9637 |
| | 80.00 | .8745 | .3456 | -.0382 | -.1885 | .9212 | .8907 | .3408 | -.0366 | -.1809 | .9364 |
| | 85.00 | .8646 | .2911 | -.0413 | -.2146 | .8867 | .8687 | .2861 | -.0391 | -.2093 | .8903 |
| | 90.00 | .8526 | .2280 | -.0426 | -.2280 | .8526 | .8588 | .2312 | -.0408 | -.2312 | .8588 |
| | 95.00 | .8340 | .1577 | -.0421 | -.2298 | .8171 | .8328 | .1680 | -.0406 | -.2400 | .8150 |
| | 100.00 | .8046 | .0666 | -.0412 | -.2053 | .7808 | .7941 | .0862 | -.0394 | -.2228 | .7670 |
| | 105.00 | .7694 | -.0530 | -.0405 | -.1479 | .7569 | .7570 | -.0241 | -.0397 | -.1726 | .7374 |
| | 110.00 | .7328 | -.1952 | -.0377 | -.0672 | .7554 | .7067 | -.1719 | -.0382 | -.0802 | .7229 |
| | 107.00 | .7612 | -.0882 | -.0413 | -.1383 | .7537 | .7263 | -.0703 | -.0383 | -.1451 | .7152 |
| | 110.00 | .7375 | -.1840 | -.0396 | -.0793 | .7559 | .6888 | -.1649 | -.0366 | -.0806 | .7037 |
| | 115.00 | .6803 | -.3588 | -.0341 | .0377 | .7682 | .6336 | -.3445 | -.0314 | .0444 | .7198 |
| | 120.00 | .6146 | -.5630 | -.0261 | .1803 | .8138 | .5681 | -.5341 | -.0247 | .1784 | .7591 |
| | 125.00 | .5434 | -.7654 | -.0141 | .3153 | .8841 | .4964 | -.7333 | -.0149 | .3160 | .8272 |
| | 130.00 | .4607 | -.9645 | .0018 | .4427 | .9729 | .4149 | -.9375 | .0006 | .4515 | .9204 |
| | 135.00 | .3797 | -1.1475 | .0170 | .5429 | 1.0799 | .3378 | -1.1233 | .0146 | .5554 | 1.0332 |
| | 140.00 | .3059 | -1.2980 | .0305 | .6000 | 1.1909 | .2637 | -1.2716 | .0268 | .6154 | 1.1436 |
| | 135.00 | .3112 | -1.1901 | .0093 | .6214 | 1.0616 | .3005 | -1.1353 | .0090 | .5903 | 1.0153 |
| | 140.00 | .2336 | -1.3206 | .0206 | .6700 | 1.1618 | .2294 | -1.2843 | .0226 | .6498 | 1.1313 |
| | 145.00 | .1684 | -1.4276 | .0283 | .6809 | 1.2660 | .1658 | -1.4061 | .0291 | .6707 | 1.2469 |
| | 150.00 | .1234 | -1.4955 | .0300 | .6409 | 1.3568 | .1232 | -1.4882 | .0327 | .6374 | 1.3504 |
| | 155.00 | .0905 | -1.5628 | .0308 | .5785 | 1.4546 | .0915 | -1.5640 | .0336 | .5781 | 1.4562 |
| | 160.00 | .0593 | -1.6124 | .0289 | .4958 | 1.5355 | .0643 | -1.6163 | .0324 | .4924 | 1.5408 |
| | 165.00 | .0307 | -1.6525 | .0216 | .3980 | 1.6041 | .0391 | -1.6612 | .0275 | .3922 | 1.6147 |
| | 169.00 | .0149 | -1.6813 | .0153 | .3062 | 1.6532 | .0246 | -1.6757 | .0213 | .2956 | 1.6496 |

TABLE I.- AERODYNAMIC CHARACTERISTICS OF MODELS - Continued

| Configuration | α, deg | $M_\infty = 3.5$ $C_N$ | $C_A$ | $C_m$ | $C_L$ | $C_D$ | $M_\infty = 4.2$ $C_N$ | $C_A$ | $C_m$ | $C_L$ | $C_D$ |
|---|---|---|---|---|---|---|---|---|---|---|---|
| 3222 | 45.00 | .8529 | .6812 | -.0228 | .1214 | 1.0848 | .8255 | .6723 | -.0225 | .1083 | 1.0591 |
| | 50.00 | .8868 | .6392 | -.0211 | .0803 | 1.0902 | .8717 | .6318 | -.0201 | .0763 | 1.0739 |
| | 55.00 | .9070 | .5886 | -.0225 | .0380 | 1.0806 | .8849 | .5738 | -.0202 | .0376 | 1.0540 |
| | 60.00 | .9159 | .5382 | -.0239 | -.0081 | 1.0623 | .9010 | .5293 | -.0215 | -.0079 | 1.0450 |
| | 65.00 | .9301 | .4864 | -.0251 | -.0477 | 1.0486 | .9162 | .4794 | -.0229 | -.0473 | 1.0330 |
| | 70.00 | .9298 | .4331 | -.0270 | -.0890 | 1.0218 | .9206 | .4331 | -.0240 | -.0921 | 1.0132 |
| | 75.00 | .9317 | .3841 | -.0280 | -.1299 | .9994 | .9147 | .3861 | -.0260 | -.1362 | .9834 |
| | 79.00 | .9256 | .3356 | -.0293 | -.1528 | .9726 | .9080 | .3441 | -.0267 | -.1645 | .9570 |
| | 75.00 | .8863 | .3809 | -.0282 | -.1385 | .9547 | .8891 | .3776 | -.0264 | -.1346 | .9565 |
| | 80.00 | .8817 | .3263 | -.0284 | -.1682 | .9250 | .8843 | .3237 | -.0264 | -.1652 | .9271 |
| | 85.00 | .8772 | .2640 | -.0280 | -.1865 | .8969 | .8834 | .2672 | -.0262 | -.1912 | .9035 |
| | 90.00 | .8722 | .1955 | -.0243 | -.1955 | .8722 | .8726 | .2046 | -.0236 | -.2046 | .8726 |
| | 95.00 | .8629 | .1167 | -.0187 | -.1915 | .8494 | .8572 | .1275 | -.0192 | -.2017 | .8428 |
| | 100.00 | .8494 | .0189 | -.0093 | -.1661 | .8332 | .8360 | .0345 | -.0098 | -.1792 | .8173 |
| | 105.00 | .8305 | -.0941 | .0035 | -.1241 | .8266 | .8062 | -.0763 | .0023 | -.1350 | .7984 |
| | 110.00 | .8024 | -.2128 | .0145 | -.0744 | .8268 | .7712 | -.1922 | .0139 | -.0832 | .7904 |
| | 107.00 | .8302 | -.1242 | .0072 | -.1239 | .8302 | .7839 | -.1124 | .0075 | -.1217 | .7825 |
| | 110.00 | .8057 | -.2003 | .0147 | -.0874 | .8256 | .7583 | -.1884 | .0152 | -.0824 | .7770 |
| | 115.00 | .7505 | -.3223 | .0255 | -.0251 | .8164 | .7025 | -.3147 | .0265 | -.0117 | .7697 |
| | 120.00 | .6847 | -.4661 | .0364 | .0613 | .8261 | .6309 | -.4525 | .0378 | .0764 | .7727 |
| | 125.00 | .6089 | -.6000 | .0472 | .1422 | .8429 | .5573 | -.5825 | .0478 | .1575 | .7906 |
| | 130.00 | .5182 | -.7434 | .0569 | .2364 | .8749 | .4723 | -.7237 | .0569 | .2508 | .8270 |
| | 135.00 | .4329 | -.8927 | .0629 | .3251 | .9373 | .3882 | -.8655 | .0625 | .3375 | .8865 |
| | 140.00 | .3585 | -1.0189 | .0660 | .3803 | 1.0109 | .3155 | -.9874 | .0641 | .3930 | .9592 |
| | 135.00 | .3522 | -.9071 | .0544 | .3924 | .8904 | .3480 | -.8659 | .0590 | .3662 | .8584 |
| | 140.00 | .2750 | -1.0465 | .0548 | .4620 | .9785 | .2772 | -1.0058 | .0604 | .4342 | .9487 |
| | 145.00 | .2145 | -1.1762 | .0528 | .4989 | 1.0865 | .2159 | -1.1438 | .0575 | .4792 | 1.0607 |
| | 150.00 | .1688 | -1.2642 | .0492 | .4859 | 1.1792 | .1762 | -1.2478 | .0542 | .4713 | 1.1687 |
| | 155.00 | .1307 | -1.3684 | .0436 | .4598 | 1.2954 | .1361 | -1.3457 | .0475 | .4454 | 1.2771 |
| | 160.00 | .0921 | -1.4497 | .0365 | .4093 | 1.3938 | .1002 | -1.4414 | .0399 | .3988 | 1.3888 |
| | 165.00 | .0557 | -1.5139 | .0274 | .3380 | 1.4767 | .0667 | -1.5111 | .0317 | .3267 | 1.4769 |
| | 169.00 | .0324 | -1.5535 | .0198 | .2646 | 1.5312 | .0464 | -1.5503 | .0250 | .2503 | 1.5307 |
| 3223 | 45.00 | .8576 | .6873 | -.0231 | .1204 | 1.0924 | .8205 | .6661 | -.0229 | .1092 | 1.0512 |
| | 50.00 | .8937 | .6426 | -.0212 | .0822 | 1.0977 | .8652 | .6293 | -.0194 | .0740 | 1.0673 |
| | 55.00 | .9099 | .5924 | -.0215 | .0366 | 1.0851 | .8962 | .5823 | -.0198 | .0370 | 1.0681 |
| | 60.00 | .9213 | .5441 | -.0232 | -.0105 | 1.0700 | .9007 | .5312 | -.0213 | -.0096 | 1.0456 |
| | 65.00 | .9363 | .4936 | -.0256 | -.0517 | 1.0572 | .9173 | .4832 | -.0231 | -.0502 | 1.0356 |
| | 70.00 | .9385 | .4397 | -.0313 | -.0922 | 1.0323 | .9209 | .4371 | -.0279 | -.0957 | 1.0149 |
| | 75.00 | .9387 | .3867 | -.0417 | -.1305 | 1.0068 | .9195 | .3935 | -.0350 | -.1421 | .9900 |
| | 79.00 | .9339 | .3372 | -.0506 | -.1528 | .9810 | .9137 | .3464 | -.0443 | -.1657 | .9630 |
| | 107.00 | .8168 | -.1732 | -.1167 | -.0732 | .8317 | .7690 | -.1527 | -.1124 | -.0788 | .7800 |
| | 110.00 | .7958 | -.2822 | -.1272 | -.0070 | .8443 | .7498 | -.2778 | -.1299 | .0046 | .7996 |
| | 115.00 | .7582 | -.5123 | -.1495 | .1439 | .9037 | .7337 | -.5670 | -.1823 | .2038 | .9046 |
| | 120.00 | .7215 | -.8311 | -.1836 | .3589 | 1.0404 | .6662 | -.7706 | -.1786 | .3343 | .9622 |
| | 125.00 | .6433 | -1.0429 | -.1555 | .4853 | 1.1252 | .5874 | -.9963 | -.1583 | .4792 | 1.0527 |
| | 130.00 | .5422 | -1.2511 | -.1123 | .6099 | 1.2195 | .4961 | -1.2008 | -.1211 | .6010 | 1.1519 |
| | 135.00 | .4337 | -1.4084 | -.0539 | .6892 | 1.3026 | .3923 | -1.3572 | -.0680 | .6823 | 1.2371 |
| | 140.00 | .3276 | -1.4889 | .0046 | .7061 | 1.3512 | .2874 | -1.4421 | -.0079 | .7068 | 1.2894 |
| | 135.00 | .3619 | -1.4133 | -.0485 | .7435 | 1.2553 | .3652 | -1.3889 | -.0739 | .7239 | 1.2403 |
| | 140.00 | .2563 | -1.4771 | .0076 | .7532 | 1.2962 | .2525 | -1.4801 | -.0098 | .7580 | 1.2961 |
| | 145.00 | .1729 | -1.5365 | .0269 | .7397 | 1.3578 | .1726 | -1.5238 | .0251 | .7326 | 1.3472 |
| | 150.00 | .1214 | -1.5771 | .0320 | .6835 | 1.4265 | .1192 | -1.5761 | .0329 | .6849 | 1.4245 |
| | 155.00 | .0825 | -1.6236 | .0345 | .6114 | 1.5064 | .0824 | -1.6269 | .0363 | .6129 | 1.5093 |
| | 160.00 | .0502 | -1.6577 | .0331 | .5198 | 1.5749 | .0540 | -1.6613 | .0364 | .5175 | 1.5796 |
| | 165.00 | .0244 | -1.6951 | .0251 | .4151 | 1.6436 | .0301 | -1.6964 | .0319 | .4100 | 1.6464 |
| | 169.00 | .0110 | -1.7161 | .0170 | .3166 | 1.6867 | .0156 | -1.7131 | .0239 | .3116 | 1.6846 |
| 1321 | -5.00 | -.1009 | .4723 | -.0040 | -.0593 | .4793 | -.1021 | .4615 | -.0023 | -.0615 | .4686 |
| | -3.00 | -.0602 | .4746 | -.0028 | -.0353 | .4771 | -.0617 | .4629 | -.0022 | -.0374 | .4655 |
| | -1.00 | -.0175 | .4785 | -.0018 | -.0092 | .4787 | -.0196 | .4648 | -.0011 | -.0115 | .4650 |
| | .00 | .0034 | .4828 | -.0018 | .0034 | .4828 | .0009 | .4691 | -.0014 | .0009 | .4691 |
| | 1.00 | .0238 | .4844 | -.0013 | .0153 | .4847 | .0199 | .4685 | -.0011 | .0117 | .4687 |
| | 3.00 | .0617 | .4865 | -.0012 | .0361 | .4890 | .0601 | .4690 | -.0003 | .0355 | .4715 |
| | 5.00 | .1062 | .4907 | -.0009 | .0630 | .4981 | .1000 | .4716 | .0003 | .0585 | .4785 |
| | 10.00 | .2167 | .5033 | -.0005 | .1260 | .5333 | .2069 | .4817 | .0002 | .1202 | .5103 |
| | 15.00 | .3291 | .5212 | -.0019 | .1830 | .5886 | .3198 | .4982 | -.0008 | .1800 | .5640 |
| | 20.00 | .4595 | .5462 | -.0050 | .2450 | .6705 | .4496 | .5196 | -.0044 | .2448 | .6421 |
| | 17.00 | .3925 | .5188 | -.0014 | .2236 | .6109 | .3764 | .4884 | .0003 | .2172 | .5771 |
| | 20.00 | .4745 | .5380 | -.0026 | .2619 | .6679 | .4520 | .5028 | -.0004 | .2527 | .6271 |
| | 25.00 | .6122 | .5574 | -.0056 | .3192 | .7639 | .5794 | .5250 | -.0028 | .3032 | .7207 |
| | 30.00 | .7289 | .5704 | -.0073 | .3460 | .8585 | .7036 | .5441 | -.0060 | .3372 | .8230 |
| | 35.00 | .8584 | .5917 | -.0097 | .3638 | .9771 | .8208 | .5578 | -.0078 | .3525 | .9277 |
| | 40.00 | .9509 | .5999 | -.0085 | .3428 | 1.0707 | .9182 | .5675 | -.0092 | .3386 | 1.0249 |
| | 45.00 | 1.0487 | .6061 | -.0105 | .3129 | 1.1701 | 1.0030 | .5708 | -.0107 | .3056 | 1.1128 |
| | 50.00 | 1.1050 | .6013 | -.0058 | .2497 | 1.2330 | 1.0596 | .5648 | -.0080 | .2484 | 1.1747 |
| | 45.00 | .9831 | .5537 | -.0228 | .3037 | 1.0867 | .9635 | .5406 | -.0196 | .2990 | 1.0636 |
| | 50.00 | 1.0351 | .5452 | -.0196 | .2478 | 1.1433 | 1.0234 | .5368 | -.0180 | .2466 | 1.1290 |
| | 55.00 | 1.0670 | .5279 | -.0200 | .1796 | 1.1768 | 1.0635 | .5290 | -.0169 | .1767 | 1.1746 |
| | 60.00 | 1.1028 | .5233 | -.0224 | .0982 | 1.2167 | 1.0949 | .5197 | -.0199 | .0974 | 1.2081 |
| | 65.00 | 1.1175 | .5081 | -.0273 | .0118 | 1.2275 | 1.1101 | .5049 | -.0240 | .0116 | 1.2195 |
| | 70.00 | 1.1180 | .4802 | -.0341 | -.0688 | 1.2148 | 1.1088 | .4792 | -.0305 | -.0711 | 1.2058 |
| | 75.00 | 1.1136 | .4452 | -.0435 | -.1418 | 1.1909 | 1.1001 | .4473 | -.0389 | -.1474 | 1.1784 |
| | 79.00 | 1.0971 | .4090 | -.0505 | -.1922 | 1.1549 | 1.0756 | .4124 | -.0453 | -.1996 | 1.1345 |

TABLE I.- AERODYNAMIC CHARACTERISTICS OF MODELS - Continued

| Configuration | α, deg | $M_\infty = 3.5$ $C_N$ | $C_A$ | $C_m$ | $C_L$ | $C_D$ | $M_\infty = 4.2$ $C_N$ | $C_A$ | $C_m$ | $C_L$ | $C_D$ |
|---|---|---|---|---|---|---|---|---|---|---|---|
| 1321 | 75.00 | 1.0731 | .4491 | -.0382 | -.1561 | 1.1527 | 1.0745 | .4446 | -.0374 | -.1514 | 1.1530 |
| | 80.00 | 1.0511 | .4048 | -.0460 | -.2162 | 1.1054 | 1.0584 | .4028 | -.0452 | -.2129 | 1.1122 |
| | 85.00 | 1.0400 | .3569 | -.0538 | -.2649 | 1.0671 | 1.0448 | .3558 | -.0525 | -.2633 | 1.0718 |
| | 90.00 | 1.0120 | .2914 | -.0581 | -.2914 | 1.0120 | 1.0128 | .2977 | -.0571 | -.2977 | 1.0128 |
| | 95.00 | .9900 | .2201 | -.0610 | -.3056 | .9670 | .9771 | .2308 | -.0593 | -.3151 | .9533 |
| | 100.00 | .9443 | .1277 | -.0621 | -.2898 | .9078 | .9301 | .1449 | -.0607 | -.3042 | .8908 |
| | 105.00 | .8967 | .0041 | -.0640 | -.2361 | .8650 | .8690 | .0264 | -.0622 | -.2504 | .8326 |
| | 110.00 | .8424 | -.1384 | -.0621 | -.1580 | .8389 | .8101 | -.1175 | -.0610 | -.1667 | .8014 |
| | 107.00 | .8665 | -.0692 | -.0705 | -.1871 | .8488 | .8237 | -.0360 | -.0619 | -.2064 | .7982 |
| | 110.00 | .8263 | -.1752 | -.0688 | -.1180 | .8364 | .7867 | -.1416 | -.0619 | -.1360 | .7877 |
| | 115.00 | .7600 | -.3612 | -.0595 | .0062 | .8415 | .7097 | -.3280 | -.0541 | -.0026 | .7818 |
| | 120.00 | .6825 | -.5637 | -.0530 | .1469 | .8730 | .6380 | -.5253 | -.0490 | .1359 | .8152 |
| | 125.00 | .6010 | -.7701 | -.0400 | .2861 | .9340 | .5517 | -.7228 | -.0341 | .2757 | .8665 |
| | 130.00 | .5086 | -.9898 | -.0230 | .4313 | 1.0258 | .4580 | -.9464 | -.0180 | .4306 | .9591 |
| | 135.00 | .4157 | -1.1659 | -.0025 | .5305 | 1.1183 | .3729 | -1.1337 | -.0022 | .5380 | 1.0654 |
| | 140.00 | .3297 | -1.3230 | .0148 | .5978 | 1.2254 | .2861 | -1.2914 | .0136 | .6109 | 1.1732 |
| | 135.00 | .3502 | -1.1545 | -.0061 | .5688 | 1.0640 | .3377 | -1.1030 | -.0045 | .5411 | 1.0187 |
| | 140.00 | .2641 | -1.3107 | .0100 | .6402 | 1.1738 | .2544 | -1.2707 | .0094 | .6219 | 1.1369 |
| | 145.00 | .1914 | -1.4156 | .0197 | .6552 | 1.2694 | .1833 | -1.3974 | .0200 | .6513 | 1.2498 |
| | 150.00 | .1370 | -1.4895 | .0225 | .6262 | 1.3584 | .1343 | -1.4907 | .0248 | .6291 | 1.3582 |
| | 155.00 | .1032 | -1.5603 | .0230 | .5659 | 1.4577 | .1047 | -1.5639 | .0275 | .5660 | 1.4616 |
| | 160.00 | .0715 | -1.6173 | .0245 | .4859 | 1.5443 | .0765 | -1.6203 | .0283 | .4823 | 1.5488 |
| | 165.00 | .0404 | -1.6624 | .0212 | .3913 | 1.6163 | .0505 | -1.6664 | .0261 | .3825 | 1.6227 |
| | 169.00 | .0183 | -1.6950 | .0173 | .3054 | 1.6674 | .0330 | -1.6739 | .0211 | .2870 | 1.6495 |
| | 165.00 | .0197 | -1.6073 | .0202 | .3970 | 1.5576 | .0297 | -1.6382 | .0208 | .3953 | 1.5901 |
| | 170.00 | -.0032 | -1.6377 | .0143 | .2876 | 1.6122 | .0073 | -1.6703 | .0146 | .2828 | 1.6462 |
| | 175.00 | -.0214 | -1.6614 | .0064 | .1661 | 1.6532 | -.0078 | -1.6863 | .0069 | .1548 | 1.6792 |
| | 177.00 | -.0254 | -1.6673 | .0039 | .1127 | 1.6637 | -.0105 | -1.6917 | .0028 | .0990 | 1.6889 |
| | 179.00 | -.0153 | -1.6653 | -.0003 | .0444 | 1.6648 | -.0075 | -1.6935 | -.0016 | .0371 | 1.6931 |
| | 180.00 | -.0195 | -1.6757 | -.0018 | .0195 | 1.6757 | -.0123 | -1.6932 | -.0039 | .0123 | 1.6932 |
| | 181.00 | -.0241 | -1.6786 | -.0038 | -.0052 | 1.6787 | -.0154 | -1.6924 | -.0061 | -.0141 | 1.6924 |
| | 183.00 | -.0183 | -1.6831 | -.0081 | -.0698 | 1.6818 | -.0125 | -1.6937 | -.0100 | -.0761 | 1.6921 |
| | 185.00 | -.0210 | -1.6857 | -.0114 | -.1260 | 1.6811 | -.0153 | -1.6904 | -.0139 | -.1321 | 1.6853 |
| 1322 | 45.00 | .9809 | .5568 | -.0210 | .2999 | 1.0873 | .9575 | .5394 | -.0185 | .2957 | 1.0585 |
| | 50.00 | 1.0345 | .5497 | -.0186 | .2439 | 1.1458 | 1.0182 | .5378 | -.0167 | .2425 | 1.1257 |
| | 55.00 | 1.0718 | .5353 | -.0189 | .1763 | 1.1850 | 1.0582 | .5265 | -.0160 | .1757 | 1.1688 |
| | 60.00 | 1.1034 | .5253 | -.0220 | .0968 | 1.2183 | 1.0891 | .5168 | -.0187 | .0970 | 1.2016 |
| | 65.00 | 1.1129 | .5044 | -.0254 | .0132 | 1.2218 | 1.1018 | .5006 | -.0222 | .0119 | 1.2102 |
| | 70.00 | 1.1147 | .4732 | -.0303 | -.0635 | 1.2093 | 1.1056 | .4709 | -.0264 | -.0644 | 1.2000 |
| | 75.00 | 1.1087 | .4377 | -.0360 | -.1358 | 1.1842 | 1.0963 | .4368 | -.0327 | -.1382 | 1.1720 |
| | 79.00 | 1.1000 | .3971 | -.0405 | -.1799 | 1.1556 | 1.0848 | .3985 | -.0374 | -.1842 | 1.1409 |
| | 75.00 | 1.0608 | .4194 | -.0348 | -.1305 | 1.1332 | 1.0789 | .4339 | -.0319 | -.1399 | 1.1544 |
| | 80.00 | 1.0501 | .3753 | -.0394 | -.1873 | 1.0993 | 1.0664 | .3847 | -.0370 | -.1937 | 1.1170 |
| | 85.00 | 1.0429 | .3183 | -.0426 | -.2262 | 1.0666 | 1.0524 | .3304 | -.0403 | -.2374 | 1.0772 |
| | 90.00 | 1.0301 | .2501 | -.0431 | -.2501 | 1.0301 | 1.0303 | .2644 | -.0423 | -.2644 | 1.0303 |
| | 95.00 | 1.0073 | .1685 | -.0412 | -.2557 | .9888 | 1.0038 | .1863 | -.0410 | -.2731 | .9838 |
| | 100.00 | .9834 | .0686 | -.0348 | -.2384 | .9566 | .9686 | .0896 | -.0352 | -.2564 | .9383 |
| | 105.00 | .9497 | -.0488 | -.0255 | -.1987 | .9299 | .9287 | -.0275 | -.0258 | -.2138 | .9042 |
| | 110.00 | .9045 | -.1698 | -.0162 | -.1498 | .9080 | .8690 | -.1564 | -.0152 | -.1502 | .8701 |
| | 107.00 | .9283 | -.0906 | -.0201 | -.1848 | .9142 | .8748 | -.0755 | -.0188 | -.1836 | .8587 |
| | 110.00 | .8973 | -.1699 | -.0130 | -.1472 | .9013 | .8425 | -.1558 | -.0102 | -.1418 | .8450 |
| | 115.00 | .8334 | -.2991 | -.0048 | -.0811 | .8817 | .7723 | -.2967 | -.0009 | -.0575 | .8253 |
| | 120.00 | .7505 | -.4444 | .0077 | .0096 | .8721 | .6918 | -.4332 | .0112 | .0293 | .8157 |
| | 125.00 | .6643 | -.5930 | .0210 | .1048 | .8843 | .6072 | -.5732 | .0233 | .1212 | .8262 |
| | 130.00 | .5691 | -.7373 | .0319 | .1990 | .9099 | .5180 | -.7052 | .0364 | .2072 | .8501 |
| | 135.00 | .4750 | -.8867 | .0418 | .2911 | .9629 | .4242 | -.8593 | .0436 | .3076 | .9076 |
| | 140.00 | .3855 | -1.0330 | .0466 | .3687 | 1.0391 | .3373 | -1.0008 | .0460 | .3849 | .9835 |
| | 135.00 | .3989 | -.8876 | .0384 | .3455 | .9097 | .3862 | -.8353 | .0415 | .3175 | .8637 |
| | 140.00 | .3128 | -1.0299 | .0398 | .4224 | .9900 | .3039 | -.9801 | .0447 | .3972 | .9461 |
| | 145.00 | .2423 | -1.1592 | .0400 | .4664 | 1.0886 | .2407 | -1.1293 | .0441 | .4505 | 1.0632 |
| | 150.00 | .1914 | -1.2782 | .0379 | .4733 | 1.2026 | .1892 | -1.2365 | .0407 | .4544 | 1.1654 |
| | 155.00 | .1531 | -1.3586 | .0356 | .4354 | 1.2960 | .1520 | -1.3383 | .0378 | .4278 | 1.2771 |
| | 160.00 | .1122 | -1.4538 | .0283 | .3918 | 1.4045 | .1167 | -1.4341 | .0326 | .3808 | 1.3875 |
| | 165.00 | .0748 | -1.5192 | .0244 | .3209 | 1.4868 | .0811 | -1.5027 | .0261 | .3106 | 1.4725 |
| | 169.00 | .0483 | -1.5616 | .0187 | .2506 | 1.5421 | .0555 | -1.5411 | .0204 | .2396 | 1.5234 |
| | 165.00 | .0685 | -1.4600 | .0268 | .3117 | 1.4280 | .0707 | -1.4775 | .0278 | .3141 | 1.4455 |
| | 170.00 | .0385 | -1.5073 | .0198 | .2238 | 1.4911 | .0405 | -1.5276 | .0200 | .2254 | 1.5114 |
| | 175.00 | .0150 | -1.5381 | .0124 | .1192 | 1.5336 | .0190 | -1.5566 | .0120 | .1168 | 1.5524 |
| | 177.00 | .0204 | -1.5477 | .0069 | .0606 | 1.5467 | .0180 | -1.5646 | .0058 | .0639 | 1.5634 |
| | 179.00 | .0106 | -1.5553 | .0037 | .0165 | 1.5553 | .0078 | -1.5677 | .0022 | .0196 | 1.5676 |
| | 180.00 | .0053 | -1.5569 | .0024 | -.0053 | 1.5569 | .0033 | -1.5691 | .0005 | -.0033 | 1.5691 |
| | 181.00 | .0000 | -1.5601 | .0006 | -.0272 | 1.5599 | -.0018 | -1.5694 | -.0015 | -.0256 | 1.5692 |
| | 183.00 | -.0098 | -1.5619 | -.0029 | -.0719 | 1.5603 | -.0120 | -1.5693 | -.0051 | -.0701 | 1.5678 |
| | 185.00 | -.0221 | -1.5627 | -.0066 | -.1142 | 1.5587 | -.0224 | -1.5662 | -.0085 | -.1142 | 1.5622 |
| 1323 | 45.00 | .9845 | .5571 | -.0224 | .3022 | 1.0900 | .9698 | .5482 | -.0189 | .2982 | 1.0734 |
| | 50.00 | 1.0465 | .5552 | -.0191 | .2474 | 1.1586 | 1.0235 | .5423 | -.0158 | .2425 | 1.1326 |
| | 55.00 | 1.0787 | .5352 | -.0188 | .1803 | 1.1906 | 1.0611 | .5309 | -.0160 | .1737 | 1.1737 |
| | 60.00 | 1.1000 | .5262 | -.0208 | .0943 | 1.2157 | 1.0790 | .5230 | -.0183 | .0866 | 1.1959 |
| | 65.00 | 1.1210 | .5131 | -.0269 | .0088 | 1.2328 | 1.1049 | .5043 | -.0235 | .0099 | 1.2145 |
| | 70.00 | 1.1215 | .4807 | -.0349 | -.0681 | 1.2183 | 1.1091 | .4764 | -.0317 | -.0684 | 1.2051 |
| | 75.00 | 1.1246 | .4403 | -.0492 | -.1342 | 1.2003 | 1.1051 | .4421 | -.0429 | -.1410 | 1.1818 |
| | 79.00 | 1.1170 | .3966 | -.0626 | -.1762 | 1.1722 | 1.0917 | .4039 | -.0546 | -.1882 | 1.1487 |

TABLE I.- AERODYNAMIC CHARACTERISTICS OF MODELS - Continued

| Configuration | α, deg | $M_\infty = 3.5$ $C_N$ | $C_A$ | $C_m$ | $C_L$ | $C_D$ | $M_\infty = 4.2$ $C_N$ | $C_A$ | $C_m$ | $C_L$ | $C_D$ |
|---|---|---|---|---|---|---|---|---|---|---|---|
| 1323 | 75.00 | 1.0767 | .4353 | -.0428 | -.1418 | 1.1527 | 1.0842 | .4380 | -.0434 | -.1425 | 1.1607 |
| | 80.00 | 1.0698 | .3866 | -.0580 | -.1949 | 1.1206 | 1.0725 | .3907 | -.0563 | -.1986 | 1.1240 |
| | 85.00 | 1.0569 | .3286 | -.0728 | -.2353 | 1.0815 | 1.0550 | .3367 | -.0694 | -.2434 | 1.0803 |
| | 90.00 | 1.0403 | .2649 | -.0843 | -.2649 | 1.0403 | 1.0296 | .2770 | -.0799 | -.2770 | 1.0296 |
| | 95.00 | 1.0129 | .1880 | -.0951 | -.2756 | .9927 | .9944 | .2067 | -.0892 | -.2926 | .9726 |
| | 100.00 | .9794 | .0873 | -.1104 | -.2561 | .9493 | .9539 | .1100 | -.1041 | -.2739 | .9203 |
| | 105.00 | .9418 | -.0571 | -.1321 | -.1886 | .9245 | .9128 | -.0250 | -.1274 | -.2122 | .8882 |
| | 110.00 | .9072 | -.2334 | -.1529 | -.0910 | .9323 | .8803 | -.2130 | -.1567 | -.1009 | .9001 |
| | 107.00 | .9213 | -.1294 | -.1471 | -.1457 | .9188 | .8688 | -.1102 | -.1411 | -.1486 | .8630 |
| | 110.00 | .8921 | -.2572 | -.1593 | -.0634 | .9263 | .8415 | -.2399 | -.1592 | -.0624 | .8728 |
| | 115.00 | .8444 | -.4818 | -.1820 | .0798 | .9689 | .8139 | -.5242 | -.2134 | .1311 | .9591 |
| | 120.00 | .7923 | -.7945 | -.2133 | .2919 | 1.0834 | .7400 | -.7496 | -.2105 | .2792 | 1.0157 |
| | 125.00 | .6972 | -1.0268 | -.1822 | .4412 | 1.1601 | .6484 | -.9888 | -.1885 | .4381 | 1.0983 |
| | 130.00 | .5907 | -1.2343 | -.1352 | .5658 | 1.2459 | .5421 | -1.1933 | -.1435 | .5656 | 1.1823 |
| | 135.00 | .4720 | -1.3896 | -.0695 | .6488 | 1.3164 | .4296 | -1.3506 | -.0857 | .6512 | 1.2588 |
| | 140.00 | .3533 | -1.4687 | -.0033 | .6735 | 1.3522 | .3093 | -1.4455 | -.0137 | .6923 | 1.3061 |
| | 135.00 | .4040 | -1.3894 | -.0635 | .6968 | 1.2682 | .4040 | -1.3484 | -.0877 | .6678 | 1.2392 |
| | 140.00 | .2896 | -1.4577 | -.0029 | .7152 | 1.3029 | .2864 | -1.4456 | -.0222 | .7098 | 1.2915 |
| | 145.00 | .1983 | -1.5290 | .0192 | .7146 | 1.3662 | .1950 | -1.5159 | .0177 | .7098 | 1.3535 |
| | 150.00 | .1391 | -1.5765 | .0275 | .6678 | 1.4349 | .1307 | -1.5751 | .0274 | .6744 | 1.4295 |
| | 155.00 | .1029 | -1.6237 | .0321 | .5929 | 1.5151 | .0967 | -1.6265 | .0321 | .5998 | 1.5150 |
| | 160.00 | .0675 | -1.6683 | .0323 | .5072 | 1.5908 | .0651 | -1.6707 | .0322 | .5102 | 1.5922 |
| | 165.00 | .0401 | -1.6960 | .0257 | .4003 | 1.6486 | .0392 | -1.6979 | .0300 | .4016 | 1.6502 |
| | 169.00 | .0218 | -1.7360 | .0195 | .3098 | 1.7083 | .0223 | -1.7169 | .0238 | .3057 | 1.6897 |
| | 165.00 | .0217 | -1.6405 | .0263 | .4036 | 1.5902 | .0296 | -1.6760 | .0269 | .4052 | 1.6266 |
| | 170.00 | -.0005 | -1.6669 | .0184 | .2900 | 1.6415 | .0101 | -1.7000 | .0192 | .2853 | 1.6760 |
| | 175.00 | -.0161 | -1.6839 | .0097 | .1628 | 1.6761 | -.0034 | -1.7172 | .0092 | .1531 | 1.7104 |
| | 177.00 | -.0189 | -1.6897 | .0063 | .1073 | 1.6864 | -.0057 | -1.7204 | .0050 | .0957 | 1.7177 |
| | 179.00 | -.0172 | -1.6954 | .0034 | .0468 | 1.6948 | -.0043 | -1.7242 | .0008 | .0344 | 1.7238 |
| | 180.00 | -.0152 | -1.6980 | .0017 | .0152 | 1.6980 | -.0008 | -1.7226 | -.0017 | .0008 | 1.7226 |
| | 181.00 | -.0113 | -1.7029 | -.0012 | -.0184 | 1.7028 | -.0048 | -1.7237 | -.0045 | -.0253 | 1.7235 |
| | 183.00 | -.0052 | -1.7045 | -.0049 | -.0840 | 1.7025 | .0022 | -1.7236 | -.0093 | -.0924 | 1.7211 |
| | 185.00 | -.0053 | -1.7089 | -.0080 | -.1436 | 1.7029 | .0006 | -1.7222 | -.0128 | -.1507 | 1.7156 |
| 2321 | -5.00 | -.1042 | .4673 | -.0014 | -.0631 | .4746 | -.1023 | .4556 | -.0021 | -.0622 | .4628 |
| | -3.00 | -.0635 | .4695 | -.0006 | -.0388 | .4722 | -.0578 | .4575 | -.0013 | -.0338 | .4599 |
| | -1.00 | -.0202 | .4730 | -.0001 | -.0119 | .4733 | -.0210 | .4587 | -.0006 | -.0130 | .4590 |
| | .00 | -.0006 | .4765 | .0005 | -.0006 | .4765 | .0004 | .4602 | -.0004 | .0004 | .4602 |
| | 1.00 | .0184 | .4785 | .0008 | .0101 | .4787 | .0178 | .4597 | -.0003 | .0098 | .4599 |
| | 3.00 | .0556 | .4818 | .0012 | .0303 | .4840 | .0555 | .4614 | .0006 | .0313 | .4637 |
| | 5.00 | .0963 | .4860 | .0016 | .0535 | .4926 | .0952 | .4648 | .0008 | .0543 | .4713 |
| | 10.00 | .2075 | .5010 | .0015 | .1173 | .5294 | .2002 | .4778 | .0008 | .1142 | .5053 |
| | 15.00 | .3298 | .5277 | .0006 | .1820 | .5951 | .3188 | .5025 | -.0007 | .1778 | .5679 |
| | 20.00 | .4618 | .5613 | -.0001 | .2419 | .6853 | .4490 | .5314 | -.0017 | .2402 | .6530 |
| | 17.00 | .3923 | .5425 | .0082 | .2166 | .6335 | .3822 | .5065 | .0045 | .2174 | .5961 |
| | 20.00 | .4781 | .5543 | .0052 | .2597 | .6844 | .4601 | .5230 | .0042 | .2535 | .6489 |
| | 25.00 | .6214 | .5870 | .0064 | .3151 | .7946 | .5916 | .5491 | .0054 | .3041 | .7477 |
| | 30.00 | .7502 | .6090 | .0073 | .3452 | .9025 | .7043 | .5741 | .0142 | .3228 | .8494 |
| | 35.00 | .8652 | .6232 | .0104 | .3512 | 1.0068 | .8410 | .5868 | .0067 | .3523 | .9631 |
| | 40.00 | .9743 | .6302 | .0104 | .3413 | 1.1091 | .9358 | .5958 | .0110 | .3339 | 1.0579 |
| | 45.00 | 1.0656 | .6360 | .0145 | .3038 | 1.2032 | 1.0187 | .5943 | .0111 | .3001 | 1.1405 |
| | 50.00 | 1.1226 | .6189 | .0187 | .2475 | 1.2578 | 1.0740 | .5807 | .0150 | .2456 | 1.1960 |
| | 45.00 | 1.0061 | .5811 | -.0087 | .3005 | 1.1223 | .9766 | .5601 | -.0072 | .2945 | 1.0867 |
| | 50.00 | 1.0659 | .5598 | -.0057 | .2563 | 1.1763 | 1.0421 | .5475 | -.0032 | .2505 | 1.1502 |
| | 55.00 | 1.1015 | .5328 | -.0038 | .1954 | 1.2079 | 1.0864 | .5283 | -.0006 | .1903 | 1.1929 |
| | 60.00 | 1.1344 | .5220 | -.0043 | .1151 | 1.2434 | 1.1160 | .5156 | -.0010 | .1115 | 1.2243 |
| | 65.00 | 1.1455 | .4980 | -.0095 | .0328 | 1.2487 | 1.1337 | .4956 | -.0044 | .0299 | 1.2370 |
| | 70.00 | 1.1491 | .4704 | -.0150 | -.0490 | 1.2407 | 1.1369 | .4715 | -.0107 | -.0543 | 1.2296 |
| | 75.00 | 1.1484 | .4370 | -.0235 | -.1249 | 1.2224 | 1.1307 | .4395 | -.0183 | -.1319 | 1.2060 |
| | 79.00 | 1.1377 | .4002 | -.0312 | -.1757 | 1.1932 | 1.1210 | .4078 | -.0256 | -.1864 | 1.1782 |
| | 75.00 | 1.0974 | .4341 | -.0186 | -.1353 | 1.1724 | 1.1153 | .4413 | -.0170 | -.1376 | 1.1915 |
| | 80.00 | 1.0894 | .3952 | -.0262 | -.2000 | 1.1415 | 1.1035 | .3996 | -.0245 | -.2019 | 1.1561 |
| | 85.00 | 1.0746 | .3451 | -.0327 | -.2501 | 1.1006 | 1.0860 | .3522 | -.0309 | -.2562 | 1.1126 |
| | 90.00 | 1.0567 | .2856 | -.0368 | -.2856 | 1.0567 | 1.0587 | .2968 | -.0353 | -.2968 | 1.0587 |
| | 95.00 | 1.0381 | .2161 | -.0388 | -.3058 | 1.0154 | 1.0231 | .2302 | -.0373 | -.3185 | .9991 |
| | 100.00 | .9932 | .1268 | -.0399 | -.2974 | .9561 | .9775 | .1501 | -.0388 | -.3175 | .9366 |
| | 105.00 | .9384 | .0054 | -.0407 | -.2481 | .9050 | .9157 | .0334 | -.0410 | -.2693 | .8759 |
| | 110.00 | .8868 | -.1384 | -.0411 | -.1732 | .8806 | .8523 | -.1088 | -.0412 | -.1893 | .8381 |
| | 107.00 | .9158 | -.0506 | -.0461 | -.2194 | .8906 | .8553 | -.0313 | -.0405 | -.2202 | .8271 |
| | 110.00 | .8756 | -.1484 | -.0445 | -.1601 | .8736 | .8170 | -.1333 | -.0400 | -.1541 | .8133 |
| | 115.00 | .8053 | -.3313 | -.0402 | -.0400 | .8699 | .7417 | -.3133 | -.0368 | -.0296 | .8046 |
| | 120.00 | .7206 | -.5388 | -.0346 | .1063 | .8935 | .6621 | -.5060 | -.0311 | .1071 | .8264 |
| | 125.00 | .6385 | -.7486 | -.0232 | .2470 | .9524 | .5736 | -.7151 | -.0205 | .2568 | .8801 |
| | 130.00 | .5422 | -.9647 | -.0075 | .3905 | 1.0354 | .4804 | -.9200 | -.0053 | .3960 | .9594 |
| | 135.00 | .4455 | -1.1444 | .0118 | .4942 | 1.1242 | .3930 | -1.1132 | .0107 | .5093 | 1.0651 |
| | 140.00 | .3511 | -1.2949 | .0262 | .5633 | 1.2176 | .3025 | -1.2707 | .0242 | .5851 | 1.1678 |
| 2322 | 45.00 | 1.0015 | .5787 | -.0078 | .2990 | 1.1174 | .9812 | .5632 | -.0072 | .2956 | 1.0920 |
| | 50.00 | 1.0600 | .5563 | -.0054 | .2553 | 1.1696 | 1.0472 | .5509 | -.0033 | .2511 | 1.1563 |
| | 55.00 | 1.0967 | .5352 | -.0035 | .1906 | 1.2054 | 1.0909 | .5338 | -.0004 | .1884 | 1.1998 |
| | 60.00 | 1.1351 | .5233 | -.0043 | .1144 | 1.2447 | 1.1211 | .5157 | -.0014 | .1140 | 1.2288 |
| | 65.00 | 1.1448 | .4952 | -.0073 | .0350 | 1.2468 | 1.1306 | .4911 | -.0046 | .0327 | 1.2322 |
| | 70.00 | 1.1520 | .4669 | -.0122 | -.0447 | 1.2422 | 1.1363 | .4637 | -.0087 | -.0471 | 1.2264 |
| | 75.00 | 1.1416 | .4270 | -.0170 | -.1170 | 1.2132 | 1.1319 | .4293 | -.0141 | -.1217 | 1.2044 |
| | 79.00 | 1.1393 | .3872 | -.0220 | -.1627 | 1.1923 | 1.1196 | .3928 | -.0177 | -.1720 | 1.1740 |

TABLE I.- AERODYNAMIC CHARACTERISTICS OF MODELS - Continued

| Configuration | α, deg | $M_\infty = 3.5$ $C_N$ | $C_A$ | $C_m$ | $C_L$ | $C_D$ | $M_\infty = 4.2$ $C_N$ | $C_A$ | $C_m$ | $C_L$ | $C_D$ |
|---|---|---|---|---|---|---|---|---|---|---|---|
| 2322 | 75.00 | 1.0997 | .4281 | -.0115 | -.1289 | 1.1730 | 1.1057 | .4268 | -.0121 | -.1261 | 1.1785 |
| | 80.00 | 1.0931 | .3817 | -.0159 | -.1861 | 1.1428 | 1.0981 | .3816 | -.0162 | -.1851 | 1.1477 |
| | 85.00 | 1.0873 | .3273 | -.0184 | -.2313 | 1.1117 | 1.0872 | .3289 | -.0189 | -.2329 | 1.1118 |
| | 90.00 | 1.0817 | .2619 | -.0181 | -.2619 | 1.0817 | 1.0765 | .2700 | -.0198 | -.2700 | 1.0765 |
| | 95.00 | 1.0619 | .1841 | -.0157 | -.2760 | 1.0419 | 1.0412 | .1921 | -.0178 | -.2822 | 1.0205 |
| | 100.00 | 1.0383 | .0786 | -.0091 | -.2577 | 1.0089 | 1.0142 | .0920 | -.0113 | -.2667 | .9828 |
| | 105.00 | 1.0012 | -.0297 | -.0008 | -.2304 | .9748 | .9615 | -.0141 | -.0031 | -.2353 | .9323 |
| | 110.00 | .9478 | -.1541 | .0069 | -.1794 | .9433 | .9154 | -.1398 | .0057 | -.1817 | .9080 |
| | 107.00 | .9762 | -.0765 | -.0003 | -.2122 | .9559 | .9199 | -.0636 | .0011 | -.2082 | .8983 |
| | 110.00 | .9372 | -.1543 | .0037 | -.1755 | .9335 | .8837 | -.1470 | .0053 | -.1641 | .8807 |
| | 115.00 | .8675 | -.2882 | .0139 | -.1054 | .9080 | .8071 | -.2866 | .0150 | -.0814 | .8526 |
| | 120.00 | .7861 | -.4290 | .0231 | -.0216 | .8953 | .7229 | -.4260 | .0261 | .0074 | .8390 |
| | 125.00 | .6911 | -.5759 | .0347 | .0753 | .8964 | .6343 | -.5634 | .0368 | .0977 | .8428 |
| | 130.00 | .5882 | -.7247 | .0441 | .1770 | .9164 | .5358 | -.7090 | .0458 | .1987 | .8661 |
| | 135.00 | .4904 | -.8724 | .0523 | .2701 | .9637 | .4402 | -.8499 | .0533 | .2897 | .9123 |
| | 140.00 | .3934 | -1.0166 | .0559 | .3521 | 1.0317 | .3506 | -.9902 | .0544 | .3679 | .9839 |
| 2323 | 45.00 | 1.0058 | .5884 | -.0087 | .2951 | 1.1273 | .9795 | .5635 | -.0087 | .2941 | 1.0911 |
| | 50.00 | 1.0611 | .5622 | -.0066 | .2514 | 1.1742 | 1.0422 | .5515 | -.0043 | .2474 | 1.1529 |
| | 55.00 | 1.0989 | .5397 | -.0048 | .1882 | 1.2098 | 1.0835 | .5324 | -.0024 | .1854 | 1.1929 |
| | 60.00 | 1.1273 | .5239 | -.0056 | .1100 | 1.2383 | 1.1173 | .5215 | -.0015 | .1071 | 1.2284 |
| | 65.00 | 1.1445 | .5021 | -.0096 | .0286 | 1.2495 | 1.1311 | .4983 | -.0062 | .0264 | 1.2357 |
| | 70.00 | 1.1489 | .4709 | -.0182 | -.0496 | 1.2407 | 1.1370 | .4693 | -.0140 | -.0521 | 1.2289 |
| | 75.00 | 1.1477 | .4313 | -.0313 | -.1196 | 1.2202 | 1.1355 | .4350 | -.0246 | -.1263 | 1.2094 |
| | 79.00 | 1.1478 | .3911 | -.0439 | -.1649 | 1.2013 | 1.1266 | .3989 | -.0355 | -.1766 | 1.1820 |
| | 75.00 | 1.1178 | .4324 | -.0234 | -.1284 | 1.1916 | 1.1138 | .4313 | -.0225 | -.1283 | 1.1875 |
| | 80.00 | 1.1144 | .3856 | -.0375 | -.1862 | 1.1645 | 1.1091 | .3868 | -.0350 | -.1883 | 1.1595 |
| | 85.00 | 1.0970 | .3278 | -.0506 | -.2310 | 1.1214 | 1.0949 | .3338 | -.0476 | -.2371 | 1.1198 |
| | 90.00 | 1.0810 | .2652 | -.0620 | -.2652 | 1.0810 | 1.0798 | .2795 | -.0580 | -.2795 | 1.0798 |
| | 95.00 | 1.0564 | .1915 | -.0721 | -.2829 | 1.0357 | 1.0383 | .2109 | -.0665 | -.3006 | 1.0160 |
| | 100.00 | 1.0258 | .0936 | -.0866 | -.2703 | .9939 | 1.0035 | .1133 | -.0821 | -.2859 | .9686 |
| | 105.00 | .9937 | -.0537 | -.1104 | -.2053 | .9737 | .9637 | -.0113 | -.1047 | -.2385 | .9338 |
| | 110.00 | .9518 | -.2203 | -.1307 | -.1185 | .9697 | .9198 | -.1973 | -.1340 | -.1292 | .9318 |
| | 107.00 | .9624 | -.1273 | -.1256 | -.1597 | .9575 | .9122 | -.1087 | -.1201 | -.1628 | .9041 |
| | 110.00 | .9294 | -.2462 | -.1385 | -.0865 | .9575 | .8863 | -.2338 | -.1390 | -.0834 | .9128 |
| | 115.00 | .8811 | -.4813 | -.1649 | .0638 | 1.0019 | .8491 | -.5237 | -.1959 | .1158 | .9908 |
| | 120.00 | .8288 | -.7952 | -.1984 | .2743 | 1.1154 | .7719 | -.7492 | -.1937 | .2628 | 1.0431 |
| | 125.00 | .7300 | -1.0218 | -.1690 | .4183 | 1.1841 | .6751 | -.9768 | -.1736 | .4129 | 1.1133 |
| | 130.00 | .6195 | -1.2312 | -.1237 | .5449 | 1.2660 | .5663 | -1.1928 | -.1325 | .5497 | 1.2005 |
| | 135.00 | .4940 | -1.3853 | -.0599 | .6303 | 1.3289 | .4520 | -1.3431 | -.0753 | .6301 | 1.2693 |
| | 140.00 | .3716 | -1.4738 | .0049 | .6626 | 1.3679 | .3290 | -1.4541 | -.0083 | .6827 | 1.3254 |
| 3321 | -5.00 | -.0991 | .4684 | -.0030 | -.0579 | .4752 | -.1011 | .4645 | -.0002 | -.0602 | .4715 |
| | -3.00 | -.0557 | .4716 | -.0026 | -.0309 | .4739 | -.0590 | .4649 | -.0003 | -.0346 | .4674 |
| | -1.00 | -.0183 | .4755 | -.0012 | -.0100 | .4757 | -.0202 | .4670 | .0007 | -.0121 | .4673 |
| | .00 | .0027 | .4754 | -.0010 | .0027 | .4754 | -.0043 | .4672 | .0007 | -.0043 | .4672 |
| | 1.00 | .0214 | .4793 | -.0007 | .0130 | .4796 | .0174 | .4671 | .0000 | .0092 | .4673 |
| | 3.00 | .0588 | .4821 | -.0002 | .0335 | .4845 | .0539 | .4684 | .0005 | .0293 | .4706 |
| | 5.00 | .0996 | .4874 | -.0002 | .0567 | .4942 | .0928 | .4702 | .0008 | .0514 | .4765 |
| | 10.00 | .2117 | .5064 | -.0003 | .1206 | .5355 | .1981 | .4879 | -.0001 | .1104 | .5149 |
| | 15.00 | .3321 | .5380 | -.0011 | .1816 | .6057 | .3216 | .5173 | -.0021 | .1767 | .5829 |
| | 20.00 | .4670 | .5744 | .0002 | .2423 | .6995 | .4570 | .5512 | -.0018 | .2409 | .6743 |
| | 17.00 | .3981 | .5505 | .0019 | .2198 | .6428 | .3822 | .5202 | .0012 | .2134 | .6092 |
| | 20.00 | .4823 | .5720 | .0035 | .2576 | .7025 | .4615 | .5397 | .0024 | .2491 | .6650 |
| | 25.00 | .6193 | .5955 | .0047 | .3096 | .8014 | .5925 | .5699 | .0047 | .2961 | .7669 |
| | 30.00 | .7463 | .6206 | .0087 | .3360 | .9107 | .7088 | .5955 | .0133 | .3160 | .8701 |
| | 35.00 | .8755 | .6415 | .0100 | .3492 | 1.0277 | .8412 | .6074 | .0077 | .3407 | .9801 |
| | 40.00 | .9836 | .6505 | .0117 | .3354 | 1.1305 | .9378 | .6159 | .0111 | .3225 | 1.0746 |
| | 45.00 | 1.0613 | .6497 | .0158 | .2911 | 1.2099 | 1.0214 | .6132 | .0137 | .2886 | 1.1558 |
| | 50.00 | 1.1225 | .6331 | .0199 | .2365 | 1.2669 | 1.0795 | .5942 | .0175 | .2387 | 1.2088 |
| | 45.00 | 1.0129 | .5960 | -.0022 | .2948 | 1.1376 | .9914 | .5839 | .0009 | .2881 | 1.1139 |
| | 50.00 | 1.0701 | .5708 | .0011 | .2505 | 1.1866 | 1.0528 | .5681 | .0047 | .2415 | 1.1717 |
| | 55.00 | 1.1120 | .5395 | .0048 | .1959 | 1.2203 | 1.1016 | .5404 | .0091 | .1892 | 1.2124 |
| | 60.00 | 1.1429 | .5174 | .0049 | .1234 | 1.2485 | 1.1337 | .5185 | .0092 | .1179 | 1.2411 |
| | 65.00 | 1.1567 | .4955 | .0009 | .0397 | 1.2577 | 1.1536 | .4960 | .0052 | .0380 | 1.2551 |
| | 70.00 | 1.1617 | .4630 | -.0044 | -.0378 | 1.2500 | 1.1592 | .4705 | .0004 | -.0456 | 1.2502 |
| | 75.00 | 1.1603 | .4261 | -.0125 | -.1113 | 1.2311 | 1.1557 | .4372 | -.0068 | -.1232 | 1.2295 |
| | 79.00 | 1.1575 | .3959 | -.0193 | -.1677 | 1.2117 | 1.1356 | .4052 | -.0126 | -.1811 | 1.1920 |
| | 75.00 | 1.1216 | .4412 | -.0071 | -.1359 | 1.1976 | 1.1322 | .4366 | -.0066 | -.1287 | 1.2066 |
| | 80.00 | 1.1066 | .3994 | -.0140 | -.2011 | 1.1592 | 1.1182 | .3948 | -.0131 | -.1946 | 1.1698 |
| | 85.00 | 1.1043 | .3533 | -.0202 | -.2557 | 1.1309 | 1.1028 | .3469 | -.0187 | -.2495 | 1.1288 |
| | 90.00 | 1.0784 | .2914 | -.0233 | -.2914 | 1.0784 | 1.0829 | .2968 | -.0229 | -.2968 | 1.0829 |
| | 95.00 | 1.0573 | .2257 | -.0249 | -.3170 | 1.0336 | 1.0432 | .2337 | -.0238 | -.3237 | 1.0188 |
| | 100.00 | 1.0188 | .1369 | -.0254 | -.3117 | .9795 | .9977 | .1551 | -.0251 | -.3260 | .9556 |
| | 105.00 | .9638 | .0125 | -.0279 | -.2616 | .9278 | .9344 | .0379 | -.0277 | -.2784 | .8928 |
| | 110.00 | .9126 | -.1231 | -.0292 | -.1964 | .8997 | .8701 | -.1045 | -.0297 | -.1994 | .8533 |
| | 107.00 | .9363 | -.0411 | -.0376 | -.2344 | .9074 | .8906 | -.0229 | -.0288 | -.2385 | .8584 |
| | 110.00 | .8975 | -.1411 | -.0331 | -.1744 | .8917 | .8459 | -.1251 | -.0293 | -.1717 | .8377 |
| | 115.00 | .8295 | -.3213 | -.0297 | -.0594 | .8876 | .7697 | -.3033 | -.0274 | -.0504 | .8258 |
| | 120.00 | .7424 | -.5315 | -.0249 | .0891 | .9087 | .6886 | -.4994 | -.0229 | .0882 | .8460 |
| | 125.00 | .6567 | -.7301 | -.0145 | .2214 | .9567 | .5970 | -.7033 | -.0120 | .2337 | .8924 |
| | 130.00 | .5599 | -.9460 | .0003 | .3648 | 1.0370 | .5031 | -.9139 | .0003 | .3767 | .9728 |
| | 135.00 | .4589 | -1.1408 | .0159 | .4822 | 1.1312 | .4109 | -1.1059 | .0146 | .4914 | 1.0726 |
| | 140.00 | .3654 | -1.3016 | .0304 | .5568 | 1.2320 | .3150 | -1.2709 | .0277 | .5756 | 1.1761 |

TABLE I.- AERODYNAMIC CHARACTERISTICS OF MODELS - Continued

| Configuration | α, deg | $M_\infty = 3.5$ $C_N$ | $C_A$ | $C_m$ | $C_L$ | $C_D$ | $M_\infty = 4.2$ $C_N$ | $C_A$ | $C_m$ | $C_L$ | $C_D$ |
|---|---|---|---|---|---|---|---|---|---|---|---|
| 3322 | 45.00 | 1.0106 | .5974 | -.0011 | .2922 | 1.1370 | .9875 | .5823 | .0013 | .2865 | 1.1101 |
| | 50.00 | 1.0668 | .5739 | .0030 | .2461 | 1.1861 | 1.0475 | .5664 | .0051 | .2394 | 1.1665 |
| | 55.00 | 1.1098 | .5442 | .0054 | .1908 | 1.2212 | 1.0970 | .5388 | .0095 | .1878 | 1.2076 |
| | 60.00 | 1.1374 | .5199 | .0054 | .1185 | 1.2450 | 1.1206 | .5105 | .0088 | .1182 | 1.2258 |
| | 65.00 | 1.1539 | .4915 | .0019 | .0422 | 1.2535 | 1.1400 | .4854 | .0058 | .0419 | 1.2383 |
| | 70.00 | 1.1616 | .4590 | -.0025 | -.0340 | 1.2485 | 1.1452 | .4564 | .0022 | -.0372 | 1.2322 |
| | 75.00 | 1.1607 | .4206 | -.0058 | -.1059 | 1.2301 | 1.1486 | .4218 | -.0025 | -.1101 | 1.2187 |
| | 79.00 | 1.1597 | .3829 | -.0095 | -.1546 | 1.2115 | 1.1509 | .3921 | -.0052 | -.1653 | 1.2046 |
| | 75.00 | 1.1135 | .4176 | -.0029 | -.1152 | 1.1837 | 1.1188 | .4241 | -.0011 | -.1201 | 1.1905 |
| | 80.00 | 1.1116 | .3738 | -.0063 | -.1751 | 1.1596 | 1.1241 | .3825 | -.0043 | -.1815 | 1.1734 |
| | 85.00 | 1.1080 | .3188 | -.0084 | -.2210 | 1.1316 | 1.1064 | .3273 | -.0066 | -.2297 | 1.1307 |
| | 90.00 | 1.0984 | .2521 | -.0076 | -.2521 | 1.0984 | 1.0982 | .2690 | -.0071 | -.2690 | 1.0982 |
| | 95.00 | 1.0726 | .1716 | -.0041 | -.2644 | 1.0535 | 1.0629 | .1914 | -.0042 | -.2833 | 1.0422 |
| | 100.00 | 1.0497 | .0728 | .0026 | -.2540 | 1.0212 | 1.0356 | .0933 | .0023 | -.2717 | 1.0037 |
| | 105.00 | 1.0178 | -.0359 | .0102 | -.2287 | .9924 | .9900 | -.0150 | .0089 | -.2417 | .9602 |
| | 110.00 | .9658 | -.1528 | .0164 | -.1867 | .9599 | .9337 | -.1443 | .0166 | -.1837 | .9268 |
| | 107.00 | 1.0011 | -.0703 | .0121 | -.2255 | .9780 | .9359 | -.0601 | .0137 | -.2161 | .9126 |
| | 110.00 | .9612 | -.1499 | .0159 | -.1878 | .9545 | .9027 | -.1409 | .0165 | -.1763 | .8965 |
| | 115.00 | .8908 | -.2818 | .0234 | -.1211 | .9264 | .8266 | -.2795 | .0250 | -.0960 | .8673 |
| | 120.00 | .8067 | -.4247 | .0320 | -.0356 | .9110 | .7395 | -.4187 | .0345 | -.0072 | .8498 |
| | 125.00 | .7153 | -.5746 | .0424 | .0604 | .9155 | .6498 | -.5522 | .0441 | .0796 | .8490 |
| | 130.00 | .6100 | -.7149 | .0506 | .1555 | .9268 | .5561 | -.7023 | .0521 | .1805 | .8774 |
| | 135.00 | .5032 | -.8658 | .0567 | .2564 | .9680 | .4526 | -.8439 | .0569 | .2767 | .9167 |
| | 140.00 | .4050 | -1.0141 | .0587 | .3417 | 1.0371 | .3605 | -.9873 | .0584 | .3584 | .9880 |
| 3323 | 45.00 | 1.0159 | .6012 | -.0023 | .2933 | 1.1435 | .9904 | .5865 | -.0003 | .2856 | 1.1150 |
| | 50.00 | 1.0729 | .5788 | .0012 | .2462 | 1.1939 | 1.0509 | .5678 | .0037 | .2405 | 1.1700 |
| | 55.00 | 1.1158 | .5465 | .0043 | .1923 | 1.2275 | 1.0994 | .5417 | .0085 | .1869 | 1.2113 |
| | 60.00 | 1.1371 | .5187 | .0048 | .1194 | 1.2442 | 1.1318 | .5197 | .0091 | .1158 | 1.2401 |
| | 65.00 | 1.1622 | .4993 | .0006 | .0387 | 1.2643 | 1.1534 | .4941 | .0050 | .0396 | 1.2541 |
| | 70.00 | 1.1646 | .4653 | -.0065 | -.0389 | 1.2535 | 1.1577 | .4657 | -.0019 | -.0416 | 1.2472 |
| | 75.00 | 1.1687 | .4228 | -.0197 | -.1059 | 1.2383 | 1.1597 | .4270 | -.0134 | -.1123 | 1.2307 |
| | 79.00 | 1.1708 | .3854 | -.0308 | -.1549 | 1.2228 | 1.1445 | .3911 | -.0231 | -.1655 | 1.1981 |
| | 75.00 | 1.1274 | .4253 | -.0129 | -.1190 | 1.1991 | 1.1283 | .4273 | -.0117 | -.1207 | 1.2005 |
| | 80.00 | 1.1251 | .3787 | -.0262 | -.1775 | 1.1738 | 1.1245 | .3804 | -.0240 | -.1793 | 1.1735 |
| | 85.00 | 1.1212 | .3249 | -.0390 | -.2260 | 1.1452 | 1.1214 | .3316 | -.0361 | -.2326 | 1.1460 |
| | 90.00 | 1.1054 | .2610 | -.0501 | -.2610 | 1.1054 | 1.0977 | .2743 | -.0457 | -.2743 | 1.0977 |
| | 95.00 | 1.0756 | .1870 | -.0598 | -.2800 | 1.0552 | 1.0669 | .2099 | -.0538 | -.3021 | 1.0445 |
| | 100.00 | 1.0512 | .0858 | -.0752 | -.2670 | 1.0203 | 1.0174 | .1118 | -.0688 | -.2868 | .9825 |
| | 105.00 | 1.0057 | -.0521 | -.0967 | -.2100 | .9849 | .9829 | -.0122 | -.0923 | -.2426 | .9526 |
| | 110.00 | .9709 | -.2215 | -.1195 | -.1240 | .9881 | .9383 | -.1970 | -.1227 | -.1358 | .9491 |
| | 107.00 | .9863 | -.1149 | -.1119 | -.1785 | .9768 | .9391 | -.0980 | -.1073 | -.1809 | .9268 |
| | 110.00 | .9521 | -.2438 | -.1260 | -.0965 | .9781 | .9087 | -.2283 | -.1274 | -.0963 | .9320 |
| | 115.00 | .8982 | -.4759 | -.1533 | .0517 | 1.0151 | .8738 | -.5192 | -.1865 | .1013 | 1.0113 |
| | 120.00 | .8442 | -.7941 | -.1899 | .2656 | 1.1282 | .7959 | -.7322 | -.1866 | .2361 | 1.0554 |
| | 125.00 | .7474 | -1.0152 | -.1626 | .4029 | 1.1945 | .6984 | -.9664 | -.1662 | .3910 | 1.1264 |
| | 130.00 | .6332 | -1.2310 | -.1185 | .5360 | 1.2764 | .5836 | -1.1904 | -.1271 | .5368 | 1.2123 |
| | 135.00 | .5133 | -1.3834 | -.0584 | .6152 | 1.3412 | .4591 | -1.3517 | -.0713 | .6312 | 1.2804 |
| | 140.00 | .3865 | -1.4724 | .0069 | .6503 | 1.3763 | .3403 | -1.4453 | -.0057 | .6683 | 1.3259 |
| 1131 | -5.00 | -.0737 | .8232 | .0120 | -.0016 | .8265 | -.0740 | .8210 | .0122 | -.0021 | .8243 |
| | -3.00 | -.0431 | .8273 | .0066 | .0003 | .8285 | -.0402 | .8238 | .0060 | .0030 | .8248 |
| | -1.00 | -.0115 | .8329 | .0012 | .0030 | .8330 | -.0094 | .8262 | .0007 | .0050 | .8263 |
| | .00 | .0032 | .8354 | -.0013 | .0032 | .8354 | .0060 | .8259 | -.0022 | .0060 | .8259 |
| | 1.00 | .0193 | .8365 | -.0044 | .0047 | .8367 | .0209 | .8251 | -.0048 | .0065 | .8254 |
| | 3.00 | .0489 | .8356 | -.0095 | .0051 | .8371 | .0499 | .8240 | -.0099 | .0067 | .8255 |
| | 5.00 | .0790 | .8345 | -.0147 | .0060 | .8382 | .0809 | .8230 | -.0155 | .0089 | .8270 |
| | 10.00 | .1571 | .8389 | -.0274 | .0090 | .8535 | .1559 | .8210 | -.0275 | .0109 | .8356 |
| | 15.00 | .2284 | .8349 | -.0398 | .0045 | .8656 | .2304 | .8148 | -.0403 | .0117 | .8466 |
| | 20.00 | .3018 | .8214 | -.0524 | .0027 | .8751 | .3040 | .8038 | -.0530 | .0108 | .8593 |
| | 16.00 | .2508 | .8401 | -.0434 | .0095 | .8767 | .2458 | .7951 | -.0421 | .0171 | .8321 |
| | 20.00 | .3024 | .8323 | -.0519 | -.0005 | .8855 | .2985 | .7889 | -.0511 | .0107 | .8434 |
| | 25.00 | .3815 | .8182 | -.0664 | .0000 | .9027 | .3678 | .7773 | -.0633 | .0048 | .8599 |
| | 30.00 | .4469 | .8006 | -.0778 | -.0133 | .9168 | .4305 | .7605 | -.0744 | -.0075 | .8739 |
| | 35.00 | .5082 | .7805 | -.0886 | -.0314 | .9308 | .4930 | .7403 | -.0853 | -.0208 | .8892 |
| | 40.00 | .5506 | .7584 | -.0956 | -.0657 | .9349 | .5337 | .7155 | -.0921 | -.0511 | .8912 |
| | 45.00 | .5793 | .7190 | -.1001 | -.0988 | .9180 | .5599 | .6753 | -.0961 | -.0816 | .8734 |
| | 50.00 | .5921 | .6705 | -.1020 | -.1330 | .8846 | .5724 | .6320 | -.0978 | -.1162 | .8447 |
| | 45.00 | .5660 | .7032 | -.0972 | -.0970 | .8974 | .5576 | .6867 | -.0951 | -.0913 | .8799 |
| | 50.00 | .5806 | .6598 | -.1000 | -.1322 | .8689 | .5739 | .6459 | -.0980 | -.1259 | .8548 |
| | 55.00 | .5872 | .6128 | -.1015 | -.1652 | .8325 | .5795 | .6000 | -.0995 | -.1591 | .8188 |
| | 60.00 | .5861 | .5713 | -.1025 | -.2017 | .7933 | .5782 | .5573 | -.1003 | -.1935 | .7794 |
| | 65.00 | .5754 | .5194 | -.1023 | -.2275 | .7410 | .5683 | .5087 | -.1003 | -.2208 | .7301 |
| | 70.00 | .5626 | .4671 | -.1017 | -.2465 | .6885 | .5526 | .4551 | -.0993 | -.2387 | .6750 |
| | 75.00 | .5450 | .4111 | -.1002 | -.2560 | .6328 | .5337 | .4039 | -.0974 | -.2520 | .6200 |
| | 75.00 | .5245 | .4065 | -.0999 | -.2569 | .6118 | .5201 | .3929 | -.0978 | -.2449 | .6041 |
| | 80.00 | .5029 | .3486 | -.0971 | -.2560 | .5558 | .4981 | .3381 | -.0946 | -.2465 | .5492 |
| | 85.00 | .4791 | .2851 | -.0929 | -.2422 | .5021 | .4740 | .2803 | -.0905 | -.2379 | .4966 |
| | 90.00 | .4537 | .2164 | -.0878 | -.2164 | .4537 | .4484 | .2173 | -.0852 | -.2173 | .4484 |
| | 95.00 | .4322 | .1339 | -.0834 | -.1711 | .4189 | .4223 | .1424 | -.0800 | -.1787 | .4083 |
| | 100.00 | .4102 | .0386 | -.0795 | -.1092 | .3973 | .3964 | .0570 | -.0760 | -.1249 | .3805 |
| | 105.00 | .3846 | -.0839 | -.0751 | -.0185 | .3932 | .3673 | -.0590 | -.0717 | -.0381 | .3701 |
| | 110.00 | .3585 | -.2345 | -.0685 | .0978 | .4171 | .3375 | -.2079 | -.0649 | .0800 | .3882 |

TABLE I.- AERODYNAMIC CHARACTERISTICS OF MODELS - Continued

| Configuration | α, deg | $M_\infty = 3.5$ $C_N$ | $C_A$ | $C_m$ | $C_L$ | $C_D$ | $M_\infty = 4.2$ $C_N$ | $C_A$ | $C_m$ | $C_L$ | $C_D$ |
|---|---|---|---|---|---|---|---|---|---|---|---|
| 1131 | 105.00 | .3732 | -.1155 | -.0749 | .0150 | .3904 | .3615 | -.0876 | -.0706 | -.0090 | .3719 |
| | 110.00 | .3400 | -.2784 | -.0673 | .1453 | .4147 | .3287 | -.2384 | -.0634 | .1116 | .3904 |
| | 115.00 | .3067 | -.4436 | -.0581 | .2724 | .4655 | .2934 | -.4044 | -.0544 | .2425 | .4368 |
| | 120.00 | .2695 | -.6436 | -.0463 | .4226 | .5552 | .2527 | -.6045 | -.0428 | .3971 | .5211 |
| | 125.00 | .2249 | -.8461 | -.0310 | .5641 | .6695 | .2078 | -.8151 | -.0289 | .5485 | .6377 |
| | 130.00 | .1807 | -1.0439 | -.0147 | .6835 | .8094 | .1631 | -1.0110 | -.0135 | .6697 | .7748 |
| | 135.00 | .1395 | -1.2300 | .0010 | .7711 | .9683 | .1234 | -1.2076 | .0024 | .7666 | .9412 |
| | 135.00 | .1204 | -1.2615 | .0037 | .8069 | .9771 | .1079 | -1.2024 | .0035 | .7739 | .9265 |
| | 140.00 | .0847 | -1.3823 | .0152 | .8236 | 1.1133 | .0804 | -1.3442 | .0173 | .8024 | 1.0814 |
| | 145.00 | .0601 | -1.4824 | .0226 | .8011 | 1.2488 | .0598 | -1.4471 | .0255 | .7810 | 1.2197 |
| | 150.00 | .0413 | -1.5487 | .0277 | .7386 | 1.3619 | .0415 | -1.5283 | .0291 | .7283 | 1.3443 |
| | 155.00 | .0234 | -1.6035 | .0276 | .6565 | 1.4632 | .0252 | -1.5944 | .0297 | .6510 | 1.4557 |
| | 160.00 | .0093 | -1.6513 | .0250 | .5561 | 1.5549 | .0129 | -1.6453 | .0289 | .5506 | 1.5505 |
| | 165.00 | .0033 | -1.6840 | .0205 | .4327 | 1.6275 | .0048 | -1.6818 | .0238 | .4307 | 1.6257 |
| | 169.00 | .0022 | -1.7121 | .0129 | .3245 | 1.6810 | .0038 | -1.7004 | .0183 | .3208 | 1.6699 |
| | 165.00 | .0032 | -1.6362 | .0241 | .4204 | 1.5813 | .0054 | -1.6605 | .0248 | .4246 | 1.6053 |
| | 170.00 | .0015 | -1.6591 | .0172 | .2866 | 1.6342 | .0051 | -1.6841 | .0175 | .2874 | 1.6594 |
| | 175.00 | .0016 | -1.6726 | .0109 | .1442 | 1.6663 | .0041 | -1.6942 | .0097 | .1436 | 1.6882 |
| | 177.00 | .0017 | -1.6752 | .0086 | .0860 | 1.6730 | .0048 | -1.7094 | .0072 | .0847 | 1.7074 |
| | 179.00 | .0004 | -1.6897 | .0060 | .0291 | 1.6894 | .0048 | -1.7014 | .0038 | .0249 | 1.7012 |
| | 180.00 | .0023 | -1.6818 | .0048 | -.0023 | 1.6818 | .0054 | -1.7034 | .0020 | -.0054 | 1.7034 |
| | 181.00 | .0052 | -1.6921 | .0028 | -.0347 | 1.6917 | .0061 | -1.7016 | -.0007 | -.0358 | 1.7012 |
| | 183.00 | .0059 | -1.6899 | -.0001 | -.0943 | 1.6873 | .0061 | -1.6991 | -.0038 | -.0950 | 1.6965 |
| | 185.00 | .0046 | -1.6943 | -.0027 | -.1523 | 1.6875 | .0056 | -1.6974 | -.0064 | -.1535 | 1.6904 |
| 1231 | -5.00 | -.0884 | .5607 | .0044 | -.0392 | .5663 | -.0987 | .5522 | .0063 | -.0502 | .5587 |
| | -3.00 | -.0488 | .5636 | .0022 | -.0192 | .5654 | -.0529 | .5534 | .0019 | -.0238 | .5554 |
| | -1.00 | -.0133 | .5680 | -.0007 | -.0034 | .5681 | -.0155 | .5555 | -.0006 | -.0058 | .5557 |
| | .00 | .0086 | .5710 | -.0022 | .0086 | .5710 | .0054 | .5555 | -.0024 | .0054 | .5555 |
| | 1.00 | .0269 | .5732 | -.0037 | .0169 | .5736 | .0237 | .5547 | -.0038 | .0140 | .5550 |
| | 3.00 | .0621 | .5752 | -.0064 | .0319 | .5777 | .0620 | .5551 | -.0066 | .0328 | .5575 |
| | 5.00 | .1013 | .5770 | -.0097 | .0506 | .5836 | .1006 | .5558 | -.0094 | .0518 | .5625 |
| | 10.00 | .2019 | .5885 | -.0179 | .0966 | .6147 | .1982 | .5644 | -.0169 | .0972 | .5902 |
| | 15.00 | .3024 | .6033 | -.0266 | .1360 | .6610 | .2984 | .5764 | -.0257 | .1390 | .6340 |
| | 20.00 | .4138 | .6242 | -.0366 | .1753 | .7281 | .4059 | .5928 | -.0355 | .1787 | .6958 |
| | 17.00 | .3508 | .6134 | -.0283 | .1562 | .6892 | .3432 | .5757 | -.0259 | .1599 | .6508 |
| | 20.00 | .4172 | .6230 | -.0337 | .1789 | .7281 | .4105 | .5878 | -.0335 | .1847 | .6927 |
| | 25.00 | .5253 | .6354 | -.0437 | .2076 | .7979 | .5049 | .6013 | -.0410 | .2035 | .7584 |
| | 30.00 | .6244 | .6527 | -.0512 | .2143 | .8775 | .6004 | .6143 | -.0484 | .2128 | .8322 |
| | 35.00 | .7127 | .6631 | -.0575 | .2035 | .9520 | .6868 | .6233 | -.0558 | .2051 | .9045 |
| | 40.00 | .7748 | .6650 | -.0609 | .1660 | 1.0074 | .7532 | .6298 | -.0595 | .1722 | .9666 |
| | 45.00 | .8180 | .6467 | -.0620 | .1211 | 1.0357 | .7967 | .6165 | -.0611 | .1275 | .9993 |
| | 50.00 | .8451 | .6219 | -.0632 | .0668 | 1.0472 | .8258 | .5912 | -.0640 | .0779 | 1.0126 |
| | 45.00 | .7762 | .6136 | -.0635 | .1150 | .9828 | .7631 | .5995 | -.0609 | .1157 | .9635 |
| | 50.00 | .8072 | .5909 | -.0673 | .0662 | .9981 | .7898 | .5828 | -.0631 | .0613 | .9796 |
| | 55.00 | .8164 | .5690 | -.0713 | .0022 | .9952 | .8037 | .5620 | -.0670 | .0006 | .9808 |
| | 60.00 | .8210 | .5472 | -.0743 | -.0634 | .9846 | .8088 | .5424 | -.0714 | -.0653 | .9716 |
| | 65.00 | .8248 | .5188 | -.0788 | -.1216 | .9668 | .8101 | .5150 | -.0749 | -.1243 | .9518 |
| | 70.00 | .8229 | .4818 | -.0826 | -.1713 | .9381 | .8039 | .4781 | -.0777 | -.1744 | .9189 |
| | 75.00 | .8062 | .4390 | -.0863 | -.2153 | .8923 | .7898 | .4408 | -.0813 | -.2214 | .8770 |
| | 79.00 | .7947 | .3989 | -.0890 | -.2400 | .8562 | .7740 | .4026 | -.0840 | -.2475 | .8366 |
| | 75.00 | .7617 | .4166 | -.0871 | -.2053 | .8435 | .7702 | .4273 | -.0816 | -.2134 | .8546 |
| | 80.00 | .7440 | .3696 | -.0898 | -.2348 | .7969 | .7594 | .3820 | -.0854 | -.2443 | .8142 |
| | 85.00 | .7205 | .3175 | -.0912 | -.2535 | .7455 | .7313 | .3304 | -.0865 | -.2654 | .7573 |
| | 90.00 | .6993 | .2562 | -.0910 | -.2562 | .6993 | .7036 | .2707 | -.0866 | -.2707 | .7036 |
| | 95.00 | .6737 | .1799 | -.0891 | -.2379 | .6554 | .6727 | .2021 | -.0848 | -.2599 | .6525 |
| | 100.00 | .6427 | .0834 | -.0867 | -.1937 | .6184 | .6340 | .1116 | -.0826 | -.2200 | .6050 |
| | 105.00 | .6003 | -.0476 | -.0826 | -.1094 | .5921 | .5853 | -.0168 | -.0788 | -.1353 | .5697 |
| | 110.00 | .5593 | -.1980 | -.0764 | -.0052 | .5933 | .5343 | -.1674 | -.0734 | -.0254 | .5594 |
| | 107.00 | .5989 | -.0686 | -.0816 | -.1095 | .5928 | .5607 | -.0502 | -.0751 | -.1159 | .5509 |
| | 110.00 | .5709 | -.1591 | -.0765 | -.0458 | .5909 | .5275 | -.1510 | -.0703 | -.0385 | .5473 |
| | 115.00 | .5154 | -.3497 | -.0667 | .0991 | .6149 | .4730 | -.3325 | -.0618 | .1014 | .5692 |
| | 120.00 | .4510 | -.5619 | -.0535 | .2611 | .6716 | .4103 | -.5292 | -.0482 | .2531 | .6199 |
| | 125.00 | .3888 | -.7623 | -.0361 | .4014 | .7557 | .3465 | -.7367 | -.0337 | .4048 | .7064 |
| | 130.00 | .3200 | -.9702 | -.0163 | .5375 | .8687 | .2824 | -.9386 | -.0151 | .5375 | .8196 |
| | 135.00 | .2568 | -1.1510 | .0018 | .6323 | .9955 | .2200 | -1.1303 | .0014 | .6436 | .9548 |
| | 140.00 | .2022 | -1.3030 | .0164 | .6827 | 1.1282 | .1713 | -1.2751 | .0160 | .6884 | 1.0869 |
| | 135.00 | .2046 | -1.2124 | .0002 | .7126 | 1.0020 | .1949 | -1.1556 | -.0010 | .6793 | .9549 |
| | 140.00 | .1511 | -1.3537 | .0149 | .7544 | 1.1341 | | | | | |
| | 145.00 | .1059 | -1.4616 | .0224 | .7516 | 1.2580 | .1039 | -1.4270 | .0240 | .7334 | 1.2285 |
| | 150.00 | .0791 | -1.5245 | .0270 | .6938 | 1.3598 | .0800 | -1.5090 | .0292 | .6852 | 1.3468 |
| | 155.00 | .0528 | -1.5921 | .0276 | .6250 | 1.4652 | .0581 | -1.5816 | .0312 | .6157 | 1.4580 |
| | 160.00 | .0314 | -1.6313 | .0258 | .5284 | 1.5436 | .0395 | -1.6349 | .0309 | .5221 | 1.5498 |
| | 165.00 | .0142 | -1.6840 | .0204 | .4222 | 1.6303 | .0224 | -1.6796 | .0258 | .4131 | 1.6282 |
| | 169.00 | .0042 | -1.6937 | .0153 | .3191 | 1.6634 | .0109 | -1.6957 | .0198 | .3129 | 1.6666 |
| | 165.00 | -.0020 | -1.6228 | .0200 | .4219 | 1.5670 | .0146 | -1.6573 | .0233 | .4148 | 1.6046 |
| | 170.00 | -.0147 | -1.6471 | .0131 | .3005 | 1.6195 | .0009 | -1.6811 | .0165 | .2910 | 1.6558 |
| | 175.00 | -.0167 | -1.6665 | .0068 | .1619 | 1.6587 | -.0035 | -1.6995 | .0080 | .1516 | 1.6927 |
| | 177.00 | -.0159 | -1.6797 | .0042 | .1038 | 1.6766 | -.0028 | -1.7052 | .0060 | .0921 | 1.7028 |
| | 179.00 | -.0155 | -1.6889 | .0026 | .0450 | 1.6883 | -.0021 | -1.7091 | .0024 | .0319 | 1.7088 |
| | 180.00 | -.0134 | -1.6958 | .0001 | .0134 | 1.6958 | -.0009 | -1.7122 | .0000 | .0009 | 1.7122 |
| | 181.00 | -.0107 | -1.6986 | -.0005 | -.0189 | 1.6985 | -.0008 | -1.7095 | -.0022 | -.0290 | 1.7092 |
| | 183.00 | -.0073 | -1.6987 | -.0038 | -.0816 | 1.6968 | -.0002 | -1.7083 | -.0052 | -.0892 | 1.7060 |
| | 185.00 | -.0073 | -1.7006 | -.0066 | -.1409 | 1.6947 | -.0001 | -1.7052 | -.0101 | -.1485 | 1.6987 |

TABLE I.- AERODYNAMIC CHARACTERISTICS OF MODELS - Continued

| Configuration | α, deg | $M_\infty = 3.5$ $C_N$ | $C_A$ | $C_m$ | $C_L$ | $C_D$ | $M_\infty = 4.2$ $C_N$ | $C_A$ | $C_m$ | $C_L$ | $C_D$ |
|---|---|---|---|---|---|---|---|---|---|---|---|
| 1232 | 45.00 | .7850 | .6152 | -.0648 | .1201 | .9901 | .7604 | .5949 | -.0618 | .1170 | .9584 |
| | 50.00 | .8054 | .5898 | -.0676 | .0659 | .9961 | .7885 | .5777 | -.0637 | .0643 | .9753 |
| | 55.00 | .8156 | .5667 | -.0720 | .0036 | .9931 | .8013 | .5585 | -.0683 | .0021 | .9767 |
| | 60.00 | .8203 | .5418 | -.0750 | -.0590 | .9813 | .8068 | .5357 | -.0721 | -.0605 | .9666 |
| | 65.00 | .8296 | .5111 | -.0786 | -.1126 | .9679 | .8086 | .5055 | -.0744 | -.1164 | .9464 |
| | 70.00 | .8176 | .4655 | -.0798 | -.1578 | .9275 | .8023 | .4648 | -.0770 | -.1624 | .9129 |
| | 75.00 | .8095 | .4228 | -.0798 | -.1989 | .8913 | .7932 | .4243 | -.0775 | -.2045 | .8760 |
| | 79.00 | .8024 | .3796 | -.0788 | -.2195 | .8601 | .7793 | .3844 | -.0776 | -.2286 | .8383 |
| | 75.00 | .7694 | .4140 | -.0777 | -.2008 | .8504 | .7770 | .4198 | -.0768 | -.2044 | .8592 |
| | 80.00 | .7551 | .3649 | -.0767 | -.2283 | .8070 | .7627 | .3680 | -.0756 | -.2300 | .8150 |
| | 85.00 | .7427 | .3074 | -.0744 | -.2415 | .7667 | .7442 | .3108 | -.0731 | -.2447 | .7685 |
| | 90.00 | .7303 | .2382 | -.0691 | -.2382 | .7303 | .7252 | .2458 | -.0689 | -.2458 | .7252 |
| | 95.00 | .7062 | .1565 | -.0608 | -.2175 | .6899 | .7012 | .1641 | -.0609 | -.2246 | .6842 |
| | 100.00 | .6934 | .0503 | -.0492 | -.1699 | .6742 | .6779 | .0655 | -.0493 | -.1822 | .6562 |
| | 105.00 | .6666 | -.0689 | -.0347 | -.1059 | .6617 | .6434 | -.0497 | -.0344 | -.1185 | .6344 |
| | 110.00 | .6318 | -.1871 | -.0203 | -.0403 | .6577 | .6017 | -.1818 | -.0182 | -.0350 | .6276 |
| | 107.00 | .6623 | -.0983 | -.0286 | -.0996 | .6621 | .6184 | -.0908 | -.0263 | -.0940 | .6179 |
| | 110.00 | .6385 | -.1740 | -.0192 | -.0549 | .6595 | .5936 | -.1699 | -.0167 | -.0433 | .6159 |
| | 115.00 | .5861 | -.3101 | -.0028 | .0333 | .6623 | .5386 | -.3098 | -.0001 | .0532 | .6190 |
| | 120.00 | .5175 | -.4531 | .0139 | .1336 | .6748 | .4780 | -.4415 | .0161 | .1433 | .6348 |
| | 125.00 | .4523 | -.5915 | .0278 | .2251 | .7098 | .4134 | -.5805 | .0297 | .2384 | .6716 |
| | 130.00 | .3843 | -.7433 | .0401 | .3224 | .7722 | .3451 | -.7247 | .0430 | .3333 | .7302 |
| | 135.00 | .3153 | -.8909 | .0494 | .4070 | .8530 | .2856 | -.8672 | .0505 | .4112 | .8152 |
| | 140.00 | .2648 | -1.0300 | .0545 | .4593 | .9592 | .2348 | -.9955 | .0539 | .4600 | .9135 |
| | 135.00 | .2520 | -.9216 | .0448 | .4735 | .8299 | .2460 | -.8793 | .0489 | .4479 | .7957 |
| | 140.00 | .2014 | -1.0592 | .0486 | .5265 | .9409 | .1977 | -1.0149 | .0520 | .5010 | .9046 |
| | 145.00 | .1563 | -1.1861 | .0475 | .5523 | 1.0613 | .1592 | -1.1491 | .0515 | .5287 | 1.0326 |
| | 150.00 | .1258 | -1.2777 | .0456 | .5300 | 1.1694 | .1319 | -1.2508 | .0499 | .5112 | 1.1492 |
| | 155.00 | .0897 | -1.3755 | .0391 | .5000 | 1.2845 | .1008 | -1.3578 | .0457 | .4824 | 1.2732 |
| | 160.00 | .0614 | -1.4564 | .0328 | .4404 | 1.3896 | .0725 | -1.4434 | .0385 | .4256 | 1.3811 |
| | 165.00 | .0346 | -1.5159 | .0240 | .3589 | 1.4733 | .0495 | -1.5162 | .0309 | .3446 | 1.4773 |
| | 169.00 | .0189 | -1.5574 | .0183 | .2786 | 1.5324 | .0308 | -1.5514 | .0228 | .2658 | 1.5288 |
| | 165.00 | .0360 | -1.4804 | .0265 | .3484 | 1.4393 | .0428 | -1.4883 | .0291 | .3439 | 1.4487 |
| | 170.00 | .0153 | -1.5207 | .0187 | .2490 | 1.5003 | .0214 | -1.5319 | .0201 | .2449 | 1.5123 |
| | 175.00 | .0024 | -1.5477 | .0106 | .1325 | 1.5420 | .0086 | -1.5586 | .0119 | .1272 | 1.5534 |
| | 177.00 | .0005 | -1.5577 | .0072 | .0810 | 1.5556 | .0048 | -1.5687 | .0075 | .0773 | 1.5669 |
| | 179.00 | -.0021 | -1.5645 | .0037 | .0294 | 1.5643 | .0022 | -1.5801 | .0033 | .0254 | 1.5799 |
| | 180.00 | -.0027 | -1.5695 | .0017 | .0027 | 1.5695 | .0022 | -1.5783 | .0011 | -.0022 | 1.5783 |
| | 181.00 | -.0013 | -1.5711 | -.0004 | -.0261 | 1.5709 | .0016 | -1.5739 | -.0016 | -.0291 | 1.5757 |
| | 183.00 | -.0013 | -1.5726 | -.0038 | -.0810 | 1.5705 | .0006 | -1.5876 | -.0059 | -.0837 | 1.5854 |
| | 185.00 | -.0033 | -1.5712 | -.0075 | -.1336 | 1.5655 | -.0039 | -1.5704 | -.0137 | -.1330 | 1.5647 |
| 1233 | 45.00 | .7834 | .6168 | -.0661 | .1178 | .9900 | .7670 | .5995 | -.0641 | .1185 | .9663 |
| | 50.00 | .8056 | .5902 | -.0684 | .0657 | .9965 | .7967 | .5846 | -.0659 | .0643 | .9861 |
| | 55.00 | .8220 | .5713 | -.0739 | .0035 | 1.0010 | .8089 | .5627 | -.0703 | .0031 | .9854 |
| | 60.00 | .8265 | .5468 | -.0778 | -.0602 | .9892 | .8133 | .5403 | -.0742 | -.0612 | .9745 |
| | 65.00 | .8278 | .5146 | -.0819 | -.1166 | .9677 | .8108 | .5103 | -.0769 | -.1198 | .9505 |
| | 70.00 | .8256 | .4720 | -.0885 | -.1611 | .9372 | .8042 | .4721 | -.0827 | -.1685 | .9172 |
| | 75.00 | .8184 | .4263 | -.0970 | -.2000 | .9008 | .7954 | .4309 | -.0896 | -.2103 | .8798 |
| | 79.00 | .8122 | .3825 | -.1050 | -.2205 | .8703 | .7824 | .3860 | -.0976 | -.2296 | .8417 |
| | 75.00 | .7733 | .4198 | -.0903 | -.2054 | .8557 | .7778 | .4213 | -.0882 | -.2056 | .8603 |
| | 80.00 | .7628 | .3670 | -.0991 | -.2289 | .8149 | .7643 | .3721 | -.0951 | -.2337 | .8173 |
| | 85.00 | .7447 | .3109 | -.1070 | -.2448 | .7690 | .7419 | .3182 | -.1017 | -.2523 | .7668 |
| | 90.00 | .7214 | .2429 | -.1124 | -.2429 | .7214 | .7245 | .2613 | -.1073 | -.2613 | .7245 |
| | 95.00 | .7025 | .1609 | -.1203 | -.2215 | .6858 | .6902 | .1858 | -.1124 | -.2453 | .6714 |
| | 100.00 | .6806 | .0523 | -.1330 | -.1697 | .6612 | .6650 | .0793 | -.1256 | -.1936 | .6411 |
| | 105.00 | .6553 | -.0976 | -.1496 | -.0753 | .6583 | .6361 | -.0775 | -.1466 | -.0897 | .6345 |
| | 110.00 | .6309 | -.2953 | -.1703 | .0617 | .6939 | .6110 | -.2829 | -.1745 | .0568 | .6710 |
| | 107.00 | .6536 | -.1545 | -.1600 | -.0434 | .6702 | .6151 | -.1364 | -.1542 | -.0494 | .6281 |
| | 110.00 | .6333 | -.2652 | -.1707 | .0326 | .6858 | .6045 | -.2681 | -.1737 | .0451 | .6597 |
| | 115.00 | .6150 | -.5555 | -.2098 | .2436 | .7922 | .5858 | -.5593 | -.2183 | .2593 | .7673 |
| | 120.00 | .5645 | -.8258 | -.2119 | .4329 | .9018 | .5207 | -.7763 | -.2032 | .4119 | .8391 |
| | 125.00 | .4923 | -1.0408 | -.1805 | .5702 | 1.0003 | .4499 | -.9972 | -.1795 | .5588 | .9405 |
| | 130.00 | .4054 | -1.2450 | -.1337 | .6931 | 1.1109 | .3715 | -1.2099 | -.1412 | .6880 | 1.0623 |
| | 135.00 | .3062 | -1.3988 | -.0688 | .7726 | 1.2056 | .2784 | -1.3762 | -.0821 | .7762 | 1.1700 |
| | 140.00 | .2214 | -1.4898 | -.0084 | .7880 | 1.2835 | .1961 | -1.4657 | -.0215 | .7919 | 1.2489 |
| | 135.00 | .2513 | -1.4270 | -.0598 | .8313 | 1.1867 | .2519 | -1.4128 | -.0847 | .8209 | 1.1771 |
| | 140.00 | .1582 | -1.4874 | -.0007 | .8349 | 1.2411 | .1651 | -1.4984 | -.0208 | .8367 | 1.2539 |
| | 145.00 | .1045 | -1.5339 | .0195 | .7942 | 1.3164 | .0989 | -1.5256 | .0187 | .7941 | 1.3064 |
| | 150.00 | .0698 | -1.5813 | .0273 | .7303 | 1.4043 | .0686 | -1.5900 | .0296 | .7356 | 1.4113 |
| | 155.00 | .0431 | -1.6268 | .0310 | .6484 | 1.4926 | .0438 | -1.6247 | .0340 | .6469 | 1.4910 |
| | 160.00 | .0200 | -1.6638 | .0283 | .5503 | 1.5703 | .0249 | -1.6626 | .0339 | .5452 | 1.5708 |
| | 165.00 | .0054 | -1.6999 | .0220 | .4348 | 1.6434 | .0083 | -1.6961 | .0279 | .4310 | 1.6404 |
| | 169.00 | -.0043 | -1.7159 | .0097 | .3316 | 1.6836 | .0010 | -1.7098 | .0216 | .3252 | 1.6786 |
| | 165.00 | -.0023 | -1.6721 | .0295 | .4350 | 1.6145 | .0088 | -1.6890 | .0290 | .4286 | 1.6338 |
| | 170.00 | -.0125 | -1.6896 | .0186 | .3057 | 1.6617 | -.0015 | -1.7103 | .0195 | .2985 | 1.6840 |
| | 175.00 | -.0117 | -1.7060 | .0117 | .1604 | 1.6985 | -.0001 | -1.7240 | .0112 | .1504 | 1.7174 |
| | 177.00 | -.0090 | -1.7109 | .0089 | .0985 | 1.7081 | .0013 | -1.7270 | .0072 | .0891 | 1.7247 |
| | 179.00 | -.0077 | -1.7204 | .0062 | .0377 | 1.7200 | .0043 | -1.7322 | .0040 | .0259 | 1.7320 |
| | 180.00 | -.0061 | -1.7233 | .0045 | .0061 | 1.7233 | .0054 | -1.7330 | .0020 | -.0054 | 1.7330 |
| | 181.00 | -.0022 | -1.7274 | .0031 | -.0279 | 1.7271 | .0066 | -1.7326 | -.0002 | -.0368 | 1.7322 |
| | 183.00 | .0005 | -1.7269 | .0002 | -.0909 | 1.7245 | .0079 | -1.7326 | -.0038 | -.0986 | 1.7298 |
| | 185.00 | .0019 | -1.7292 | -.0028 | -.1526 | 1.7224 | .0102 | -1.7273 | -.0070 | -.1608 | 1.7198 |

TABLE I.- AERODYNAMIC CHARACTERISTICS OF MODELS - Continued

| Configuration | α, deg | $M_\infty = 3.5$ $C_N$ | $C_A$ | $C_m$ | $C_L$ | $C_D$ | $M_\infty = 4.2$ $C_N$ | $C_A$ | $C_m$ | $C_L$ | $C_D$ |
|---|---|---|---|---|---|---|---|---|---|---|---|
| 2231 | -5.00 | -.0926 | .5391 | .0040 | -.0452 | .5452 | -.0923 | .5292 | .0049 | -.0458 | .5352 |
| | -3.00 | -.0525 | .5396 | .0015 | -.0242 | .5416 | -.0534 | .5293 | .0018 | -.0256 | .5314 |
| | -1.00 | -.0132 | .5441 | -.0010 | -.0037 | .5442 | -.0154 | .5298 | -.0008 | -.0062 | .5300 |
| | .00 | .0093 | .5472 | -.0029 | .0093 | .5472 | .0066 | .5295 | -.0026 | .0066 | .5295 |
| | 1.00 | .0263 | .5488 | -.0039 | .0167 | .5492 | .0266 | .5339 | -.0041 | .0173 | .5343 |
| | 3.00 | .0636 | .5513 | -.0067 | .0346 | .5538 | .0642 | .5348 | -.0069 | .0361 | .5375 |
| | 5.00 | .1039 | .5554 | -.0096 | .0551 | .5624 | .1018 | .5378 | -.0096 | .0545 | .5447 |
| | 10.00 | .2100 | .5721 | -.0177 | .1075 | .5999 | .2026 | .5521 | -.0173 | .1036 | .5789 |
| | 15.00 | .3175 | .5958 | -.0258 | .1525 | .6577 | .3114 | .5742 | -.0262 | .1522 | .6352 |
| | 20.00 | .4296 | .6218 | -.0336 | .1910 | .7312 | .4263 | .6006 | -.0343 | .1952 | .7102 |
| | 17.00 | .3647 | .6108 | -.0252 | .1702 | .6907 | .3548 | .5749 | -.0257 | .1712 | .6535 |
| | 20.00 | .4340 | .6282 | -.0305 | .1929 | .7387 | .4239 | .5938 | -.0302 | .1952 | .7030 |
| | 25.00 | .5410 | .6500 | -.0354 | .2156 | .8177 | .5259 | .6165 | -.0358 | .2161 | .7810 |
| | 30.00 | .6469 | .6694 | -.0420 | .2255 | .9032 | .6230 | .6351 | -.0412 | .2219 | .8615 |
| | 35.00 | .7342 | .6806 | -.0467 | .2110 | .9786 | .6928 | .6460 | -.0398 | .1970 | .9266 |
| | 40.00 | .7930 | .6854 | -.0461 | .1669 | 1.0347 | .7707 | .6454 | -.0491 | .1755 | .9898 |
| | 45.00 | .8400 | .6672 | -.0483 | .1222 | 1.0658 | .8126 | .6280 | -.0486 | .1305 | 1.0187 |
| | 50.00 | .8674 | .6356 | -.0482 | .0707 | 1.0731 | .8362 | .5958 | -.0477 | .0811 | 1.0236 |
| | 45.00 | .8046 | .6263 | -.0564 | .1260 | 1.0118 | .7818 | .6083 | -.0533 | .1227 | .9829 |
| | 50.00 | .8216 | .5919 | -.0587 | .0747 | 1.0099 | .8099 | .5845 | -.0553 | .0728 | .9961 |
| | 55.00 | .8374 | .5678 | -.0597 | .0152 | 1.0117 | .8266 | .5596 | -.0571 | .0157 | .9981 |
| | 60.00 | .8523 | .5420 | -.0609 | -.0432 | 1.0091 | .8432 | .5380 | -.0574 | -.0443 | .9992 |
| | 65.00 | .8571 | .5109 | -.0654 | -.1008 | .9927 | .8452 | .5060 | -.0614 | -.1014 | .9798 |
| | 70.00 | .8548 | .4688 | -.0700 | -.1481 | .9635 | .8398 | .4712 | -.0650 | -.1556 | .9504 |
| | 75.00 | .8410 | .4265 | -.0750 | -.1943 | .9227 | .8278 | .4330 | -.0696 | -.2039 | .9117 |
| | 79.00 | .8312 | .3872 | -.0778 | -.2215 | .8898 | .8128 | .3975 | -.0721 | -.2351 | .8737 |
| | 75.00 | .8080 | .4359 | -.0721 | -.2119 | .8933 | .8064 | .4254 | -.0702 | -.2022 | .8890 |
| | 80.00 | .7906 | .3894 | -.0752 | -.2462 | .8462 | .7939 | .3844 | -.0722 | -.2407 | .8486 |
| | 85.00 | .7677 | .3362 | -.0758 | -.2680 | .7941 | .7746 | .3382 | -.0733 | -.2694 | .8012 |
| | 90.00 | .7538 | .2763 | -.0757 | -.2763 | .7538 | .7490 | .2798 | -.0724 | -.2798 | .7490 |
| | 95.00 | .7242 | .2027 | -.0731 | -.2650 | .7037 | .7185 | .2159 | -.0703 | -.2777 | .6970 |
| | 100.00 | .6925 | .1091 | -.0705 | -.2277 | .6631 | .6790 | .1283 | -.0683 | -.2443 | .6464 |
| | 105.00 | .6481 | -.0240 | -.0676 | -.1445 | .6322 | .6303 | .0018 | -.0657 | -.1648 | .6083 |
| | 110.00 | .6026 | -.1757 | -.0625 | -.0410 | .6264 | .5763 | -.1486 | -.0607 | -.0575 | .5923 |
| | 107.00 | .6251 | -.1020 | -.0728 | -.0853 | .6276 | .5922 | -.0672 | -.0639 | -.1088 | .5859 |
| | 110.00 | .5931 | -.2025 | -.0685 | -.0126 | .6266 | .5575 | -.1691 | -.0600 | -.0318 | .5817 |
| | 115.00 | .5285 | -.3859 | -.0590 | .1263 | .6421 | .4936 | -.3546 | -.0522 | .1128 | .5973 |
| | 120.00 | .4687 | -.5949 | -.0462 | .2808 | .7034 | .4327 | -.5551 | -.0405 | .2643 | .6523 |
| | 125.00 | .3971 | -.7953 | -.0303 | .4237 | .7815 | .3643 | -.7594 | -.0267 | .4131 | .7340 |
| | 130.00 | .3321 | -1.0093 | -.0117 | .5597 | .9032 | .2957 | -.9653 | -.0099 | .5494 | .8470 |
| | 135.00 | .2594 | -1.1825 | .0054 | .6528 | 1.0196 | .2307 | -1.1495 | .0059 | .6497 | .9759 |
| | 140.00 | .2000 | -1.3355 | .0197 | .7052 | 1.1516 | .1743 | -1.3034 | .0199 | .7043 | 1.1105 |
| 2232 | 45.00 | .8020 | .6248 | -.0559 | .1253 | 1.0089 | .7831 | .6122 | -.0527 | .1203 | .9871 |
| | 50.00 | .8231 | .5947 | -.0575 | .0735 | 1.0128 | .8149 | .5871 | -.0548 | .0741 | 1.0016 |
| | 55.00 | .8367 | .5698 | -.0596 | .0131 | 1.0122 | .8236 | .5599 | -.0568 | .0138 | .9958 |
| | 60.00 | .8517 | .5397 | -.0604 | -.0415 | 1.0075 | .8411 | .5361 | -.0567 | -.0437 | .9965 |
| | 65.00 | .8538 | .5005 | -.0639 | -.0928 | .9853 | .8433 | .5000 | -.0603 | -.0968 | .9756 |
| | 70.00 | .8526 | .4589 | -.0657 | -.1396 | .9582 | .8412 | .4632 | -.0622 | -.1476 | .9489 |
| | 75.00 | .8431 | .4183 | -.0659 | -.1858 | .9227 | .8315 | .4225 | -.0647 | -.1929 | .9126 |
| | 79.00 | .8448 | .3759 | -.0667 | -.2078 | .9010 | .8208 | .3832 | -.0636 | -.2196 | .8788 |
| | 75.00 | .8011 | .4124 | -.0650 | -.1910 | .8805 | .8088 | .4139 | -.0637 | -.1905 | .8883 |
| | 80.00 | .7922 | .3647 | -.0637 | -.2216 | .8435 | .7932 | .3664 | -.0619 | -.2231 | .8448 |
| | 85.00 | .7816 | .3058 | -.0609 | -.2365 | .8053 | .7819 | .3109 | -.0596 | -.2415 | .8060 |
| | 90.00 | .7698 | .2377 | -.0554 | -.2377 | .7698 | .7644 | .2462 | -.0550 | -.2462 | .7644 |
| | 95.00 | .7540 | .1586 | -.0475 | -.2237 | .7373 | .7433 | .1686 | -.0475 | -.2328 | .7258 |
| | 100.00 | .7360 | .0575 | -.0365 | -.1844 | .7148 | .7153 | .0697 | -.0362 | -.1928 | .6923 |
| | 105.00 | .7080 | -.0601 | -.0223 | -.1251 | .6995 | .6810 | -.0442 | -.0224 | -.1336 | .6692 |
| | 110.00 | .6699 | -.1807 | -.0091 | -.0593 | .6913 | .6364 | -.1686 | -.0082 | -.0593 | .6557 |
| | 107.00 | .6922 | -.1085 | -.0199 | -.0986 | .6937 | .6446 | -.0955 | -.0166 | -.0972 | .6443 |
| | 110.00 | .6703 | -.1829 | -.0102 | -.0574 | .6925 | .6174 | -.1770 | -.0081 | -.0449 | .6407 |
| | 115.00 | .6139 | -.3193 | .0054 | .0300 | .6913 | .5621 | -.3180 | .0087 | .0506 | .6438 |
| | 120.00 | .5445 | -.4658 | .0201 | .1311 | .7044 | .4984 | -.4498 | .0236 | .1403 | .6565 |
| | 125.00 | .4681 | -.6064 | .0328 | .2282 | .7312 | .4251 | -.5958 | .0368 | .2442 | .6899 |
| | 130.00 | .3949 | -.7585 | .0448 | .3272 | .7901 | .3567 | -.7275 | .0470 | .3280 | .7408 |
| | 135.00 | .3276 | -.8939 | .0531 | .4005 | .8637 | .2912 | -.8700 | .0536 | .4093 | .8211 |
| | 140.00 | .2650 | -1.0451 | .0573 | .4688 | .9709 | .2344 | -1.0131 | .0567 | .4716 | .9268 |
| 2233 | 45.00 | .7997 | .6312 | -.0562 | .1192 | 1.0118 | .7848 | .6191 | -.0532 | .1171 | .9927 |
| | 50.00 | .8247 | .6032 | -.0584 | .0680 | 1.0195 | .8140 | .5942 | -.0557 | .0680 | 1.0055 |
| | 55.00 | .8401 | .5760 | -.0600 | .0101 | 1.0186 | .8291 | .5682 | -.0579 | .0102 | 1.0051 |
| | 60.00 | .8547 | .5481 | -.0617 | -.0473 | 1.0143 | .8453 | .5464 | -.0579 | -.0505 | 1.0052 |
| | 65.00 | .8581 | .5150 | -.0658 | -.1040 | .9953 | .8492 | .5143 | -.0622 | -.1072 | .9870 |
| | 70.00 | .8554 | .4706 | -.0731 | -.1496 | .9648 | .8465 | .4736 | -.0691 | -.1555 | .9574 |
| | 75.00 | .8507 | .4285 | -.0811 | -.1937 | .9326 | .8398 | .4351 | -.0755 | -.2029 | .9238 |
| | 79.00 | .8455 | .3817 | -.0904 | -.2134 | .9028 | .8198 | .3901 | -.0824 | -.2265 | .8791 |

TABLE I. - AERODYNAMIC CHARACTERISTICS OF MODELS - Continued

| Configuration | $\alpha$, deg | $M_\infty = 3.5$ $C_N$ | $C_A$ | $C_m$ | $C_L$ | $C_D$ | $M_\infty = 4.2$ $C_N$ | $C_A$ | $C_m$ | $C_L$ | $C_D$ |
|---|---|---|---|---|---|---|---|---|---|---|---|
| 2233 | 75.00 | .8085 | .4143 | -.0805 | -.1909 | .8882 | .8175 | .4225 | -.0753 | -.1965 | .8990 |
| | 80.00 | .7910 | .3591 | -.0890 | -.2162 | .8414 | .8049 | .3734 | -.0832 | -.2279 | .8575 |
| | 85.00 | .7845 | .3051 | -.0977 | -.2355 | .8081 | .7873 | .3200 | -.0900 | -.2502 | .8122 |
| | 90.00 | .7666 | .2421 | -.1034 | -.2421 | .7666 | .7642 | .2621 | -.0947 | -.2621 | .7642 |
| | 95.00 | .7477 | .1646 | -.1103 | -.2292 | .7306 | .7359 | .1886 | -.1007 | -.2520 | .7167 |
| | 100.00 | .7241 | .0490 | -.1238 | -.1740 | .7046 | .7061 | .0819 | -.1144 | -.2033 | .6812 |
| | 105.00 | .6925 | -.1057 | -.1408 | -.0771 | .6963 | .6755 | -.0718 | -.1359 | -.1054 | .6711 |
| | 110.00 | .6636 | -.2889 | -.1607 | .0445 | .7224 | .6444 | -.2834 | -.1656 | .0459 | .7024 |
| | 107.00 | .6894 | -.1639 | -.1523 | -.0449 | .7072 | .6455 | -.1472 | -.1475 | -.0479 | .6603 |
| | 110.00 | .6691 | -.2813 | -.1646 | .0355 | .7249 | .6352 | -.2836 | -.1683 | .0492 | .6939 |
| | 115.00 | .6452 | -.5696 | -.2011 | .2435 | .8255 | .6098 | -.5813 | -.2112 | .2691 | .7984 |
| | 120.00 | .5846 | -.8276 | -.2006 | .4244 | .9201 | .5423 | -.7883 | -.1967 | .4115 | .8638 |
| | 125.00 | .5049 | -1.0452 | -.1662 | .5666 | 1.0131 | .4694 | -1.0214 | -.1759 | .5675 | .9704 |
| | 130.00 | .4154 | -1.2541 | -.1219 | .6937 | 1.1243 | .3805 | -1.2199 | -.1300 | .6899 | 1.0756 |
| | 135.00 | .3202 | -1.4002 | -.0615 | .7637 | 1.2165 | .2880 | -1.3804 | -.0743 | .7725 | 1.1797 |
| | 140.00 | .2220 | -1.4830 | -.0001 | .7832 | 1.2787 | .1954 | -1.4663 | -.0091 | .7928 | 1.2488 |
| 3231 | -5.00 | -.1013 | .5338 | .0067 | -.0544 | .5406 | -.0947 | .5225 | .0055 | -.0488 | .5288 |
| | -3.00 | -.0579 | .5347 | .0036 | -.0298 | .5370 | -.0505 | .5204 | .0024 | -.0232 | .5223 |
| | -1.00 | -.0204 | .5370 | .0015 | -.0110 | .5373 | -.0160 | .5206 | .0000 | -.0069 | .5208 |
| | .00 | .0011 | .5390 | .0000 | .0011 | .5390 | .0043 | .5204 | -.0013 | .0043 | .5204 |
| | 1.00 | .0187 | .5403 | -.0019 | .0093 | .5405 | .0204 | .5197 | -.0026 | .0113 | .5200 |
| | 3.00 | .0595 | .5427 | -.0046 | .0310 | .5451 | .0611 | .5272 | -.0059 | .0334 | .5297 |
| | 5.00 | .0966 | .5473 | -.0074 | .0485 | .5536 | .0979 | .5305 | -.0082 | .0513 | .5370 |
| | 10.00 | .2037 | .5680 | -.0155 | .1020 | .5948 | .2009 | .5508 | -.0164 | .1022 | .5773 |
| | 15.00 | .3186 | .6023 | -.0243 | .1518 | .6643 | .3172 | .5804 | -.0253 | .1562 | .6427 |
| | 20.00 | .4314 | .6323 | -.0302 | .1891 | .7417 | | | | | |
| | 17.00 | .3735 | .6181 | -.0266 | .1765 | .7003 | .3585 | .5813 | -.0258 | .1729 | .6606 |
| | 20.00 | .4423 | .6373 | -.0294 | .1976 | .7502 | .4262 | .6018 | -.0291 | .1947 | .7113 |
| | 25.00 | .5539 | .6661 | -.0348 | .2205 | .8378 | .5315 | .6351 | -.0336 | .2133 | .8002 |
| | 30.00 | .6521 | .6863 | -.0389 | .2215 | .9204 | .6325 | .6560 | -.0382 | .2198 | .8844 |
| | 35.00 | .7436 | .7031 | -.0431 | .2058 | 1.0024 | .7150 | .6665 | -.0419 | .2034 | .9561 |
| | 40.00 | .8045 | .7056 | -.0435 | .1627 | 1.0576 | .7769 | .6666 | -.0434 | .1666 | 1.0100 |
| | 45.00 | .8329 | .6901 | -.0379 | .1010 | 1.0770 | .8227 | .6485 | -.0449 | .1231 | 1.0403 |
| | 50.00 | .8701 | .6479 | -.0434 | .0630 | 1.0830 | .8455 | .6109 | -.0433 | .0755 | 1.0404 |
| | 45.00 | .7996 | .6303 | -.0512 | .1197 | 1.0111 | .7856 | .6206 | -.0478 | .1167 | .9943 |
| | 50.00 | .8241 | .6043 | -.0509 | .0668 | 1.0197 | .8182 | .5928 | -.0489 | .0718 | 1.0078 |
| | 55.00 | .8401 | .5696 | -.0520 | .0153 | 1.0149 | .8322 | .5620 | -.0500 | .0169 | 1.0041 |
| | 60.00 | .8508 | .5393 | -.0558 | -.0416 | 1.0065 | .8447 | .5366 | -.0515 | -.0423 | .9998 |
| | 65.00 | .8588 | .4986 | -.0599 | -.0890 | .9890 | .8506 | .5013 | -.0555 | -.0948 | .9828 |
| | 70.00 | .8621 | .4622 | -.0641 | -.1394 | .9682 | .8483 | .4653 | -.0590 | -.1471 | .9562 |
| | 75.00 | .8476 | .4205 | -.0674 | -.1868 | .9275 | .8399 | .4316 | -.0616 | -.1995 | .9230 |
| | 79.00 | .8378 | .3829 | -.0702 | -.2160 | .8955 | .8272 | .3960 | -.0655 | -.2309 | .8876 |
| | 75.00 | .8150 | .4279 | -.0645 | -.2024 | .8979 | .8178 | .4249 | -.0622 | -.1987 | .8999 |
| | 80.00 | .8017 | .3838 | -.0675 | -.2388 | .8561 | .8040 | .3821 | -.0641 | -.2367 | .8582 |
| | 85.00 | .7861 | .3345 | -.0684 | -.2647 | .8123 | .7856 | .3367 | -.0647 | -.2669 | .8119 |
| | 90.00 | .7691 | .2748 | -.0672 | -.2748 | .7691 | .7661 | .2844 | -.0638 | -.2844 | .7661 |
| | 95.00 | .7450 | .2010 | -.0652 | -.2651 | .7247 | .7374 | .2189 | -.0617 | -.2824 | .7155 |
| | 100.00 | .7129 | .1113 | -.0634 | -.2334 | .6828 | .6975 | .1314 | -.0599 | -.2505 | .6641 |
| | 105.00 | .6684 | -.0207 | -.0609 | -.1530 | .6510 | .6452 | .0029 | -.0584 | -.1698 | .6224 |
| | 110.00 | .6189 | -.1701 | -.0561 | -.0519 | .6398 | .5915 | -.1456 | -.0543 | -.0655 | .6056 |
| | 107.00 | .6496 | -.0812 | -.0614 | -.1122 | .6449 | .6036 | -.0638 | -.0571 | -.1155 | .5959 |
| | 110.00 | .6166 | -.1829 | -.0581 | -.0390 | .6420 | .5701 | -.4618 | -.0532 | -.0430 | .5910 |
| | 115.00 | .5507 | -.3647 | -.0499 | .0978 | .6532 | .5038 | -.3543 | -.0453 | .1082 | .6063 |
| | 120.00 | .4825 | -.5671 | -.0381 | .2498 | .7015 | .4413 | -.5360 | -.0332 | .2435 | .6502 |
| | 125.00 | .4199 | -.7713 | -.0217 | .3910 | .7864 | .3700 | -.7527 | -.0212 | .4044 | .7348 |
| | 130.00 | .3494 | -.9857 | -.0048 | .5305 | .9013 | .3021 | -.9499 | -.0037 | .5335 | .8420 |
| | 135.00 | .2762 | -1.1634 | .0120 | .6274 | 1.0180 | .2337 | -1.1404 | .0118 | .6411 | .9717 |
| | 140.00 | .2142 | -1.3177 | .0263 | .6829 | 1.1471 | .1777 | -1.2890 | .0245 | .6925 | 1.1016 |
| 3232 | 45.00 | .8080 | .6416 | -.0487 | .1176 | 1.0250 | .7903 | .6282 | -.0474 | .1146 | 1.0030 |
| | 50.00 | .8322 | .6130 | -.0492 | .0653 | 1.0315 | .8233 | .5997 | -.0477 | .0698 | 1.0162 |
| | 55.00 | .8465 | .5804 | -.0507 | .0101 | 1.0263 | .8373 | .5708 | -.0484 | .0127 | 1.0133 |
| | 60.00 | .8571 | .5457 | -.0532 | -.0440 | 1.0152 | .8495 | .5393 | -.0503 | -.0422 | 1.0054 |
| | 65.00 | .8635 | .5018 | -.0559 | -.0899 | .9947 | .8563 | .5019 | -.0529 | -.0930 | .9882 |
| | 70.00 | .8637 | .4599 | -.0583 | -.1368 | .9689 | .8566 | .4633 | -.0550 | -.1424 | .9634 |
| | 75.00 | .8587 | .4150 | -.0593 | -.1787 | .9368 | .8433 | .4182 | -.0564 | -.1857 | .9228 |
| | 79.00 | .8540 | .3743 | -.0592 | -.2044 | .9097 | .8346 | .3817 | -.0562 | -.2154 | .8921 |
| | 75.00 | .8098 | .4078 | -.0595 | -.1843 | .8877 | .8221 | .4113 | -.0576 | -.1845 | .9006 |
| | 80.00 | .8067 | .3606 | -.0590 | -.2150 | .8570 | .8121 | .3659 | -.0565 | -.2193 | .8633 |
| | 85.00 | .7996 | .3068 | -.0560 | -.2359 | .8233 | .8017 | .3122 | -.0539 | -.2411 | .8259 |
| | 90.00 | .7905 | .2387 | -.0506 | -.2387 | .7905 | .7919 | .2516 | -.0499 | -.2516 | .7919 |
| | 95.00 | .7750 | .1592 | -.0423 | -.2261 | .7582 | .7694 | .1730 | -.0417 | -.2394 | .7514 |
| | 100.00 | .7549 | .0610 | -.0308 | -.1912 | .7328 | .7343 | .0732 | -.0301 | -.1996 | .7104 |
| | 105.00 | .7246 | -.0581 | -.0169 | -.1314 | .7149 | .7016 | -.0437 | -.0172 | -.1394 | .6890 |
| | 110.00 | .6852 | -.1823 | -.0032 | -.0631 | .7063 | .6505 | -.1670 | -.0028 | -.0656 | .6684 |
| | 107.00 | .7068 | -.1099 | -.0098 | -.1015 | .7080 | .6605 | -.0993 | -.0090 | -.0981 | .6606 |
| | 110.00 | .6796 | -.1841 | -.0015 | -.0594 | .7016 | .6335 | -.1779 | -.0002 | -.0495 | .6561 |
| | 115.00 | .6255 | -.3215 | .0128 | .0271 | .7028 | .5739 | -.3134 | .0150 | .0415 | .6525 |
| | 120.00 | .5544 | -.4632 | .0277 | .1239 | .7117 | .5059 | -.4484 | .0297 | .1353 | .6623 |
| | 125.00 | .4821 | -.6093 | .0409 | .2226 | .7444 | .4354 | -.5915 | .0422 | .2348 | .6960 |
| | 130.00 | .4045 | -.7521 | .0498 | .3161 | .7933 | .3632 | -.7388 | .0519 | .3325 | .7531 |
| | 135.00 | .3367 | -.9050 | .0572 | .4018 | .8780 | .2986 | -.8791 | .0572 | .4105 | .8327 |
| | 140.00 | .2713 | -1.0367 | .0598 | .4586 | .9686 | .2405 | -1.0100 | .0594 | .4650 | .9283 |

TABLE I.- AERODYNAMIC CHARACTERISTICS OF MODELS - Continued

| Configuration | α, deg | $M_\infty = 3.5$ $C_N$ | $C_A$ | $C_m$ | $C_L$ | $C_D$ | $M_\infty = 4.2$ $C_N$ | $C_A$ | $C_m$ | $C_L$ | $C_D$ |
|---|---|---|---|---|---|---|---|---|---|---|---|
| 3233 | 45.00 | .8047 | .6365 | -.0512 | .1189 | 1.0191 | .7924 | .6251 | -.0476 | .1183 | 1.0023 |
| | 50.00 | .8289 | .6085 | -.0518 | .0667 | 1.0261 | .8224 | .5997 | -.0480 | .0692 | 1.0155 |
| | 55.00 | .8443 | .5735 | -.0519 | .0145 | 1.0205 | .8374 | .5680 | -.0494 | .0150 | 1.0118 |
| | 60.00 | .8546 | .5431 | -.0544 | -.0430 | 1.0117 | .8480 | .5399 | -.0512 | -.0436 | 1.0044 |
| | 65.00 | .8591 | .4995 | -.0594 | -.0896 | .9897 | .8556 | .5039 | -.0549 | -.0951 | .9884 |
| | 70.00 | .8632 | .4606 | -.0656 | -.1376 | .9686 | .8556 | .4655 | -.0607 | -.1448 | .9632 |
| | 75.00 | .8565 | .4184 | -.0730 | -.1824 | .9356 | .8429 | .4227 | -.0672 | -.1901 | .9236 |
| | 79.00 | .8583 | .3746 | -.0830 | -.2039 | .9140 | .8310 | .3841 | -.0737 | -.2184 | .8890 |
| | 75.00 | .8210 | .4176 | -.0706 | -.1909 | .9011 | .8312 | .4192 | -.0681 | -.1898 | .9114 |
| | 80.00 | .8144 | .3648 | -.0791 | -.2179 | .8653 | .8211 | .3718 | -.0752 | -.2236 | .8732 |
| | 85.00 | .8022 | .3111 | -.0870 | -.2400 | .8263 | .8053 | .3217 | -.0814 | -.2503 | .8302 |
| | 90.00 | .7859 | .2496 | -.0925 | -.2496 | .7859 | .7829 | .2643 | -.0856 | -.2643 | .7829 |
| | 95.00 | .7681 | .1719 | -.0995 | -.2381 | .7502 | .7564 | .1922 | -.0912 | -.2574 | .7367 |
| | 100.00 | .7453 | .0640 | -.1119 | -.1924 | .7229 | .7258 | .0894 | -.1050 | -.2140 | .6993 |
| | 105.00 | .7153 | -.0936 | -.1304 | -.0947 | .7151 | .6928 | -.0675 | -.1268 | -.1141 | .6867 |
| | 110.00 | .6833 | -.2788 | -.1507 | .0283 | .7375 | .6626 | -.2710 | -.1563 | .0281 | .7153 |
| | 107.00 | .7052 | -.1623 | -.1448 | -.0510 | .7219 | .6576 | -.1436 | -.1404 | -.0550 | .6709 |
| | 110.00 | .6839 | -.2800 | -.1575 | .0292 | .7385 | .6413 | -.2761 | -.1599 | .0401 | .6970 |
| | 115.00 | .6533 | -.5605 | -.1938 | .2319 | .8290 | .6162 | -.5635 | -.2028 | .2503 | .7966 |
| | 120.00 | .5909 | -.8218 | -.1939 | .4162 | .9226 | .5466 | -.7814 | -.1905 | .4034 | .8641 |
| | 125.00 | .5131 | -1.0389 | -.1608 | .5567 | 1.0162 | .4772 | -1.0158 | -.1702 | .5584 | .9735 |
| | 130.00 | .4219 | -1.2521 | -.1182 | .6880 | 1.1280 | .3850 | -1.2189 | -.1276 | .6862 | 1.0784 |
| | 135.00 | .3191 | -1.3952 | -.0551 | .7610 | 1.2122 | .2913 | -1.3793 | -.0722 | .7693 | 1.1813 |
| | 140.00 | .2273 | -1.4891 | .0048 | .7831 | 1.2868 | .1974 | -1.4632 | -.0063 | .7893 | 1.2478 |
| 1331 | -5.00 | -.1299 | .4149 | .0100 | -.0932 | .4246 | -.1317 | .3867 | .0109 | -.0975 | .3967 |
| | -3.00 | -.0771 | .4148 | .0057 | -.0553 | .4182 | -.0792 | .3841 | .0064 | -.0590 | .3877 |
| | -1.00 | -.0297 | .4157 | .0026 | -.0224 | .4161 | -.0286 | .3821 | .0022 | -.0219 | .3825 |
| | .00 | -.0044 | .4171 | .0013 | -.0044 | .4171 | -.0052 | .3813 | .0002 | -.0052 | .3813 |
| | 1.00 | .0184 | .4186 | -.0008 | .0111 | .4188 | .0210 | .3825 | -.0025 | .0143 | .3828 |
| | 3.00 | .0665 | .4225 | -.0049 | .0443 | .4254 | .0675 | .3865 | -.0065 | .0472 | .3895 |
| | 5.00 | .1164 | .4282 | -.0090 | .0787 | .4367 | .1191 | .3924 | -.0113 | .0844 | .4013 |
| | 10.00 | .2418 | .4501 | -.0188 | .1599 | .4853 | .2462 | .4145 | -.0210 | .1705 | .4510 |
| | 15.00 | .3677 | .4797 | -.0257 | .2310 | .5586 | .3724 | .4454 | -.0284 | .2444 | .5266 |
| | 20.00 | .4946 | .5116 | -.0321 | .2898 | .6499 | .4915 | .4756 | -.0333 | .2992 | .6150 |
| | 17.00 | .4333 | .4881 | -.0285 | .2717 | .5935 | .4325 | .4562 | -.0287 | .2802 | .5628 |
| | 20.00 | .5035 | .5074 | -.0308 | .2996 | .6490 | .5003 | .4701 | -.0310 | .3093 | .6128 |
| | 25.00 | .6241 | .5296 | -.0359 | .3418 | .7438 | .6098 | .4924 | -.0358 | .3446 | .7040 |
| | 30.00 | .7360 | .5488 | -.0415 | .3630 | .8433 | .7257 | .5238 | -.0421 | .3666 | .8165 |
| | 35.00 | .8439 | .5760 | -.0474 | .3609 | .9558 | .8240 | .5448 | -.0481 | .3625 | .9189 |
| | 40.00 | .9196 | .5853 | -.0491 | .3283 | 1.0395 | .8990 | .5603 | -.0485 | .3285 | 1.0071 |
| | 45.00 | .9808 | .5925 | -.0469 | .2745 | 1.1125 | .9513 | .5647 | -.0472 | .2734 | 1.0720 |
| | 50.00 | 1.0096 | .5828 | -.0451 | .2026 | 1.1480 | .9840 | .5578 | -.0451 | .2052 | 1.1123 |
| | 45.00 | .9250 | .5639 | -.0575 | .2554 | 1.0528 | .9063 | .5450 | -.0544 | .2555 | 1.0263 |
| | 50.00 | .9654 | .5583 | -.0581 | .1928 | 1.0984 | .9438 | .5427 | -.0541 | .1910 | 1.0718 |
| | 55.00 | .9964 | .5491 | -.0580 | .1217 | 1.1312 | .9790 | .5397 | -.0541 | .1194 | 1.1115 |
| | 60.00 | 1.0136 | .5420 | -.0627 | .0374 | 1.1488 | 1.0002 | .5347 | -.0585 | .0370 | 1.1336 |
| | 65.00 | 1.0195 | .5319 | -.0677 | -.0512 | 1.1488 | 1.0076 | .5243 | -.0627 | -.0494 | 1.1348 |
| | 70.00 | 1.0100 | .5011 | -.0739 | -.1255 | 1.1205 | 1.0018 | .5029 | -.0691 | -.1300 | 1.1134 |
| | 75.00 | 1.0088 | .4769 | -.0805 | -.1996 | 1.0978 | .9896 | .4747 | -.0746 | -.2024 | 1.0788 |
| | 79.00 | .9881 | .4410 | -.0845 | -.2444 | 1.0540 | .9734 | .4482 | -.0787 | -.2543 | 1.0410 |
| | 75.00 | .9509 | .4543 | -.0747 | -.1927 | 1.0361 | .9796 | .4724 | -.0728 | -.2028 | 1.0685 |
| | 80.00 | .9308 | .4152 | -.0802 | -.2473 | .9888 | .9587 | .4309 | -.0778 | -.2579 | 1.0189 |
| | 85.00 | .9091 | .3677 | -.0829 | -.2871 | .9376 | .9302 | .3849 | -.0803 | -.3023 | .9602 |
| | 90.00 | .8827 | .3086 | -.0836 | -.3086 | .8827 | .8964 | .3305 | -.0811 | -.3305 | .8964 |
| | 95.00 | .8524 | .2348 | -.0832 | -.3082 | .8287 | .8527 | .2600 | -.0795 | -.3333 | .8268 |
| | 100.00 | .8088 | .1361 | -.0826 | -.2744 | .7729 | .7978 | .1610 | -.0795 | -.2971 | .7577 |
| | 105.00 | .7520 | .0003 | -.0814 | -.1949 | .7263 | .7384 | .0336 | -.0789 | -.2236 | .7045 |
| | 110.00 | .6960 | -.1584 | -.0771 | -.0892 | .7082 | .6697 | -.1269 | -.0735 | -.1099 | .6727 |
| | 107.00 | .7451 | -.0304 | -.0826 | -.1887 | .7214 | .6957 | -.0132 | -.0756 | -.1908 | .6692 |
| | 110.00 | .7009 | -.1297 | -.0780 | -.1178 | .7030 | .6543 | -.1179 | -.0725 | -.1130 | .6551 |
| | 115.00 | .6362 | -.3243 | -.0696 | .0250 | .7137 | .5826 | -.3060 | -.0642 | .0311 | .6573 |
| | 120.00 | .5504 | -.5341 | -.0560 | .1873 | .7438 | .5094 | -.4975 | -.0520 | .1761 | .6900 |
| | 125.00 | .4784 | -.7361 | -.0393 | .3286 | .8141 | .4260 | -.7162 | -.0360 | .3424 | .7598 |
| | 130.00 | .3939 | -.9619 | -.0196 | .4837 | .9200 | .3494 | -.9192 | -.0176 | .4795 | .8586 |
| | 135.00 | .3178 | -1.1442 | .0004 | .5844 | 1.0338 | .2719 | -1.1173 | .0019 | .5978 | .9824 |
| | 140.00 | .2455 | -1.3141 | .0179 | .6566 | 1.1645 | .2058 | -1.2781 | .0174 | .6638 | 1.1114 |
| | 135.00 | .2601 | -1.1861 | -.0042 | .6548 | 1.0226 | .2431 | -1.1497 | -.0039 | .6411 | .9849 |
| | 140.00 | .1889 | -1.3339 | .0125 | .7127 | 1.1432 | .1779 | -1.2930 | .0126 | .6948 | 1.1049 |
| | 145.00 | .1355 | -1.4417 | .0200 | .7159 | 1.2587 | .1285 | -1.4218 | .0218 | .7102 | 1.2384 |
| | 150.00 | .0982 | -1.5154 | .0245 | .6727 | 1.3615 | .0934 | -1.4989 | .0264 | .6686 | 1.3448 |
| | 155.00 | .0731 | -1.5801 | .0275 | .6015 | 1.4630 | .0742 | -1.5677 | .0323 | .5953 | 1.4522 |
| | 160.00 | .0488 | -1.6295 | .0276 | .5114 | 1.5479 | .0504 | -1.6166 | .0286 | .5055 | 1.5363 |
| | 165.00 | .0257 | -1.6689 | .0228 | .4071 | 1.6187 | .0291 | -1.6576 | .0244 | .4009 | 1.6086 |
| | 169.00 | .0109 | -1.6947 | .0179 | .3127 | 1.6657 | .0160 | -1.6789 | .0173 | .3047 | 1.6512 |
| | 165.00 | .0171 | -1.6182 | .0238 | .4023 | 1.5675 | .0262 | -1.6423 | .0251 | .3998 | 1.5931 |
| | 170.00 | .0001 | -1.6579 | .0171 | .2878 | 1.6327 | .0108 | -1.6708 | .0179 | .2795 | 1.6473 |
| | 175.00 | -.0096 | -1.6757 | .0097 | .1557 | 1.6685 | .0013 | -1.6894 | .0099 | .1459 | 1.6831 |
| | 177.00 | -.0114 | -1.6696 | .0072 | .0988 | 1.6667 | .0002 | -1.6959 | .0067 | .0886 | 1.6936 |
| | 179.00 | -.0107 | -1.6765 | .0046 | .0400 | 1.6760 | .0004 | -1.6997 | .0020 | .0293 | 1.6994 |
| | 180.00 | -.0086 | -1.6817 | .0028 | .0086 | 1.6817 | .0010 | -1.7136 | .0002 | -.0010 | 1.7136 |
| | 181.00 | -.0059 | -1.6844 | .0004 | -.0235 | 1.6842 | .0028 | -1.7004 | -.0021 | -.0325 | 1.7001 |
| | 183.00 | -.0005 | -1.6839 | -.0034 | -.0876 | 1.6816 | .0039 | -1.6982 | -.0057 | -.0928 | 1.6957 |
| | 185.00 | .0001 | -1.6874 | -.0059 | -.1472 | 1.6810 | .0023 | -1.6971 | -.0091 | -.1502 | 1.6905 |

TABLE I. - AERODYNAMIC CHARACTERISTICS OF MODELS - Continued

$M_\infty = 6.0$

| Configuration | α, deg | $C_N$ | $C_A$ | $C_m$ | $C_L$ | $C_D$ |
|---|---|---|---|---|---|---|
| 1111 | -5.00 | -.0676 | .8818 | .0106 | .0096 | .8843 |
| | -3.00 | -.0342 | .8837 | .0041 | .0121 | .8843 |
| | -1.00 | -.0038 | .8851 | -.0008 | .0116 | .8851 |
| | .00 | .0141 | .8844 | -.0044 | .0141 | .8844 |
| | 1.00 | .0282 | .8858 | -.0069 | .0127 | .8862 |
| | 3.00 | .0585 | .8795 | -.0114 | .0124 | .8814 |
| | 5.00 | .0919 | .8741 | -.0179 | .0154 | .8788 |
| | 10.00 | .1613 | .8684 | -.0292 | .0080 | .8852 |
| | 15.00 | .2329 | .8515 | -.0411 | .0046 | .8828 |
| | 20.00 | .3031 | .8416 | -.0551 | -.0033 | .8945 |
| | 25.00 | .3728 | .8203 | -.0698 | -.0088 | .9010 |
| | 16.00 | .2474 | .8314 | -.0457 | .0086 | .8674 |
| | 20.00 | .2940 | .8134 | -.0523 | -.0019 | .8649 |
| | 25.00 | .3578 | .7919 | -.0641 | -.0104 | .8689 |
| | 30.00 | .4158 | .7620 | -.0744 | -.0209 | .8678 |
| | 35.00 | .4677 | .7222 | -.0843 | -.0311 | .8599 |
| | 40.00 | .5117 | .6931 | -.0935 | -.0535 | .8598 |
| | 45.00 | .5483 | .6516 | -.1020 | -.0731 | .8485 |
| | 50.00 | .5700 | .6095 | -.1068 | -.1005 | .8284 |
| | 55.00 | .5797 | .5661 | -.1100 | -.1312 | .7996 |
| | 60.00 | .5798 | .5176 | -.1115 | -.1584 | .7609 |
| | 61.30 | .5818 | .5353 | -.0950 | -.1861 | .7684 |
| | 65.00 | .5781 | .4942 | -.0946 | -.2036 | .7328 |
| | 70.00 | .5649 | .4400 | -.0932 | -.2203 | .6813 |
| | 75.00 | .5456 | .3856 | -.0905 | -.2313 | .6268 |
| | 80.00 | .5187 | .3285 | -.0869 | -.2334 | .5678 |
| | 85.00 | .4888 | .2693 | -.0821 | -.2257 | .5104 |
| | 90.00 | .4609 | .2040 | -.0753 | -.2040 | .4609 |
| | 95.00 | .4300 | .1388 | -.0695 | -.1758 | .4163 |
| | 100.00 | .4018 | .0592 | -.0640 | -.1281 | .3854 |
| | 103.00 | .3839 | -.0056 | -.0617 | -.0809 | .3754 |
| | 77.00 | .5307 | .3594 | -.0890 | -.2300 | .5979 |
| | 80.00 | .5153 | .3231 | -.0865 | -.2287 | .5636 |
| | 85.00 | .4888 | .2627 | -.0812 | -.2191 | .5098 |
| | 90.00 | .4579 | .2043 | -.0749 | -.2043 | .4579 |
| | 95.00 | .4257 | .1373 | -.0684 | -.1739 | .4121 |
| | 100.00 | .3962 | .0611 | -.0628 | -.1290 | .3796 |
| | 105.00 | .3636 | -.0468 | -.0601 | -.0489 | .3633 |
| | 110.00 | .3335 | -.2032 | -.0565 | .0768 | .3829 |
| | 115.00 | .3033 | -.3806 | -.0499 | .2167 | .4357 |
| | 118.00 | .2844 | -.5025 | -.0463 | .3102 | .4870 |
| | 121.00 | .2654 | -.5727 | -.0389 | .3542 | .5225 |
| | 125.00 | .2335 | -.7477 | -.0294 | .4786 | .6202 |
| | 130.00 | .1909 | -.9567 | -.0128 | .6102 | .7612 |
| | 135.00 | .1495 | -1.1580 | .0043 | .7131 | .9245 |
| | 140.00 | .1066 | -1.3156 | .0144 | .7640 | 1.0763 |
| | 145.00 | .0728 | -1.4338 | .0232 | .7628 | 1.2163 |
| | 150.00 | .0544 | -1.5205 | .0299 | .7132 | 1.3440 |
| | 155.00 | .0369 | -1.5860 | .0330 | .6369 | 1.4530 |
| | 160.00 | .0167 | -1.6426 | .0298 | .5461 | 1.5492 |
| | 165.00 | .0048 | -1.6825 | .0265 | .4309 | 1.6264 |
| | 153.00 | .0299 | -1.5929 | .0252 | .6966 | 1.4329 |
| | 155.00 | .0186 | -1.6159 | .0244 | .6656 | 1.4716 |
| | 160.00 | .0074 | -1.6737 | .0239 | .5654 | 1.5753 |
| | 165.00 | -.0054 | -1.7145 | .0179 | .4489 | 1.6547 |
| | 170.00 | -.0069 | -1.7386 | .0135 | .3087 | 1.7110 |
| | 175.00 | -.0085 | -1.7563 | .0061 | .1616 | 1.7489 |
| | 177.00 | -.0125 | -1.7578 | .0008 | .1045 | 1.7547 |
| | 179.00 | -.0088 | -1.7854 | -.0014 | .0400 | 1.7849 |
| | 180.00 | -.0077 | -1.7886 | -.0026 | .0077 | 1.7886 |
| | 181.00 | -.0078 | -1.7885 | -.0060 | -.0234 | 1.7883 |
| | 183.00 | -.0079 | -1.7855 | -.0082 | -.0856 | 1.7835 |
| | 185.00 | -.0081 | -1.7856 | -.0116 | -.1475 | 1.7795 |
| 1211 | -5.00 | -.0816 | .7186 | .0004 | -.0187 | .7230 |
| | -3.00 | -.0482 | .7183 | .0008 | -.0105 | .7198 |
| | -1.00 | -.0114 | .7226 | -.0028 | .0012 | .7227 |
| | .00 | .0023 | .7212 | -.0004 | .0023 | .7212 |
| | 1.00 | .0200 | .7166 | -.0014 | .0075 | .7168 |
| | 3.00 | .0580 | .7208 | -.0033 | .0202 | .7228 |
| | 5.00 | .0907 | .7172 | -.0035 | .0279 | .7224 |
| | 10.00 | .1760 | .7107 | -.0060 | .0499 | .7305 |
| | 15.00 | .2608 | .7030 | -.0087 | .0699 | .7465 |
| | 20.00 | .3516 | .6971 | -.0143 | .0920 | .7754 |
| | 25.00 | .4427 | .6882 | -.0218 | .1104 | .8108 |
| | 16.00 | .2836 | .7040 | -.0096 | .0785 | .7549 |
| | 20.00 | .3589 | .6928 | -.0144 | .1003 | .7738 |
| | 25.00 | .4433 | .6828 | -.0187 | .1132 | .8061 |
| | 30.00 | .5383 | .6650 | -.0265 | .1337 | .8451 |
| | 35.00 | .6241 | .6472 | -.0343 | .1400 | .8882 |
| | 40.00 | .7093 | .6281 | -.0432 | .1397 | .9370 |
| | 45.00 | .7856 | .6035 | -.0525 | .1288 | .9822 |
| | 50.00 | .8478 | .5769 | -.0587 | .1031 | 1.0202 |
| | 55.00 | .8825 | .5483 | -.0640 | .0571 | 1.0374 |
| | 60.00 | .8952 | .5059 | -.0653 | .0095 | 1.0283 |

| Configuration | α, deg | $C_N$ | $C_A$ | $C_m$ | $C_L$ | $C_D$ |
|---|---|---|---|---|---|---|
| 1211 | 61.30 | .9010 | .5101 | -.0470 | -.0093 | 1.0353 |
| | 65.00 | .9054 | .4801 | -.0486 | -.0525 | 1.0235 |
| | 70.00 | .8950 | .4416 | -.0510 | -.1089 | .9920 |
| | 75.00 | .8826 | .3907 | -.0559 | -.1490 | .9536 |
| | 80.00 | .8442 | .3459 | -.0586 | -.1940 | .8915 |
| | 85.00 | .8196 | .2924 | -.0603 | -.2199 | .8420 |
| | 90.00 | .7866 | .2307 | -.0626 | -.2307 | .7866 |
| | 95.00 | .7555 | .1694 | -.0607 | -.2342 | .7328 |
| | 100.00 | .7124 | .0995 | -.0616 | -.2217 | .6843 |
| | 103.00 | .6831 | .0246 | -.0625 | -.1777 | .6601 |
| | 76.00 | .8717 | .3797 | -.0571 | -.1575 | .9377 |
| | 80.00 | .8523 | .3391 | -.0600 | -.1859 | .8983 |
| | 85.00 | .8181 | .2817 | -.0619 | -.2093 | .8396 |
| | 90.00 | .7853 | .2212 | -.0626 | -.2212 | .7853 |
| | 95.00 | .7459 | .1596 | -.0619 | -.2240 | .7292 |
| | 100.00 | .7085 | .0838 | -.0621 | -.2055 | .6831 |
| | 105.00 | .6635 | -.0169 | -.0644 | -.1554 | .6453 |
| | 110.00 | .6267 | -.1658 | -.0653 | -.0585 | .6456 |
| | 115.00 | .5804 | -.3474 | -.0632 | .0696 | .6728 |
| | 118.00 | .5469 | -.4672 | -.0608 | .1557 | .7022 |
| | 121.00 | .4965 | -.5260 | -.0675 | .1752 | .6965 |
| | 125.00 | .4436 | -.6978 | -.0458 | .3172 | .7636 |
| | 130.00 | .3678 | -.9160 | -.0293 | .4653 | .8705 |
| | 135.00 | .2915 | -1.1183 | -.0139 | .5847 | .9969 |
| | 140.00 | .2196 | -1.2797 | .0011 | .6544 | 1.1215 |
| | 145.00 | .1586 | -1.4006 | .0150 | .6735 | 1.2383 |
| | 150.00 | .1118 | -1.4947 | .0222 | .6506 | 1.3503 |
| | 155.00 | .0815 | -1.5653 | .0248 | .5876 | 1.4530 |
| | 160.00 | .0580 | -1.6134 | .0255 | .4973 | 1.5359 |
| | 162.70 | .0462 | -1.6415 | .0226 | .4497 | 1.5792 |
| | 151.00 | .0690 | -1.5622 | .0146 | .6796 | 1.4094 |
| | 155.00 | .0731 | -1.6043 | .0229 | .6117 | 1.4849 |
| | 160.00 | .0502 | -1.6596 | .0212 | .5204 | 1.5767 |
| | 165.00 | .0246 | -1.7022 | .0165 | .4168 | 1.6506 |
| | 170.00 | .0068 | -1.7246 | .0125 | .2928 | 1.6996 |
| | 175.00 | -.0075 | -1.7446 | .0055 | .1596 | 1.7373 |
| | 177.00 | -.0126 | -1.7447 | .0015 | .1039 | 1.7416 |
| | 179.00 | -.0090 | -1.7541 | -.0025 | .0396 | 1.7536 |
| | 180.00 | -.0065 | -1.7542 | -.0019 | .0065 | 1.7542 |
| | 181.00 | -.0028 | -1.7478 | -.0029 | -.0277 | 1.7475 |
| | 183.00 | -.0029 | -1.7544 | -.0059 | -.0889 | 1.7522 |
| | 185.00 | -.0043 | -1.7560 | -.0079 | -.1488 | 1.7497 |
| 1212 | 61.00 | .9004 | .5051 | -.0486 | -.0053 | 1.0324 |
| | 65.00 | .9021 | .4727 | -.0495 | -.0472 | 1.0174 |
| | 70.00 | .8985 | .4268 | -.0520 | -.0938 | .9903 |
| | 75.00 | .8819 | .3805 | -.0514 | -.1392 | .9504 |
| | 80.00 | .8538 | .3242 | -.0532 | -.1710 | .8971 |
| | 85.00 | .8304 | .2662 | -.0515 | -.1928 | .8504 |
| | 90.00 | .8053 | .1970 | -.0492 | -.1970 | .8053 |
| | 95.00 | .7767 | .1202 | -.0447 | -.1874 | .7632 |
| | 100.00 | .7482 | .0317 | -.0389 | -.1611 | .7313 |
| | 104.00 | .7297 | -.0352 | -.0317 | -.1298 | .7189 |
| | 76.00 | .8742 | .3671 | -.0531 | -.1447 | .9370 |
| | 80.00 | .8547 | .3233 | -.0530 | -.1700 | .8978 |
| | 85.00 | .8239 | .2653 | -.0514 | -.1925 | .8439 |
| | 90.00 | .8007 | .1984 | -.0486 | -.1984 | .8007 |
| | 95.00 | .7671 | .1221 | -.0442 | -.1885 | .7536 |
| | 100.00 | .7394 | .0296 | -.0390 | -.1576 | .7231 |
| | 105.00 | .7084 | -.0816 | -.0290 | -.1045 | .7054 |
| | 110.00 | .6850 | -.2076 | -.0162 | -.0392 | .7147 |
| | 115.00 | .6476 | -.3458 | -.0050 | .0397 | .7330 |
| | 118.00 | .6133 | -.4272 | .0033 | .0893 | .7421 |
| | 121.00 | .5652 | -.4595 | .0007 | .1028 | .7212 |
| | 125.00 | .5108 | -.5785 | .0191 | .1809 | .7502 |
| | 130.00 | .4308 | -.7179 | .0348 | .2733 | .7915 |
| | 135.00 | .3509 | -.8585 | .0411 | .3590 | .8552 |
| | 140.00 | .2775 | -.9957 | .0464 | .4274 | .9411 |
| | 145.00 | .2154 | -1.1210 | .0472 | .4666 | 1.0418 |
| | 150.00 | .1733 | -1.2373 | .0477 | .4686 | 1.1582 |
| | 155.00 | .1332 | -1.3368 | .0417 | .4443 | 1.2679 |
| | 160.00 | .0953 | -1.4244 | .0343 | .3976 | 1.3711 |
| | 162.70 | .0723 | -1.4653 | .0270 | .3670 | 1.4204 |
| | 151.00 | .1561 | -1.2947 | .0427 | .4912 | 1.2081 |
| | 155.00 | .1290 | -1.3765 | .0389 | .4648 | 1.3020 |
| | 160.00 | .0934 | -1.4364 | .0323 | .4035 | 1.3817 |
| | 165.00 | .0550 | -1.5393 | .0228 | .3453 | 1.5011 |
| | 170.00 | .0296 | -1.5856 | .0159 | .2461 | 1.5666 |
| | 175.00 | .0065 | -1.6113 | .0068 | .1339 | 1.6058 |
| | 177.00 | .0013 | -1.6226 | .0035 | .0836 | 1.6205 |
| | 179.00 | -.0040 | -1.6275 | -.0009 | .0324 | 1.6272 |
| | 180.00 | -.0053 | -1.6291 | -.0014 | .0053 | 1.6291 |
| | 181.00 | -.0104 | -1.6291 | -.0043 | -.0180 | 1.6291 |
| | 183.00 | -.0157 | -1.6306 | -.0083 | -.0696 | 1.6292 |
| | 185.00 | -.0197 | -1.6275 | -.0114 | -.1223 | 1.6230 |

TABLE I. - AERODYNAMIC CHARACTERISTICS OF MODELS - Continued

$M_\infty = 6.0$

| Configuration | $\alpha$, deg | $C_N$ | $C_A$ | $C_m$ | $C_L$ | $C_D$ |
|---|---|---|---|---|---|---|
| 1213 | 61.00 | .9023 | .5084 | -.0486 | -.0073 | 1.0357 |
| | 65.00 | .9050 | .4856 | -.0473 | -.0576 | 1.0254 |
| | 70.00 | .9015 | .4385 | -.0521 | -.1038 | .9971 |
| | 75.00 | .8881 | .3897 | -.0588 | -.1465 | .9587 |
| | 80.00 | .8616 | .3386 | -.0657 | -.1839 | .9073 |
| | 85.00 | .8385 | .2743 | -.0746 | -.2002 | .8592 |
| | 90.00 | .8055 | .2157 | -.0803 | -.2157 | .8055 |
| | 95.00 | .7692 | .1484 | -.0857 | -.2148 | .7534 |
| | 100.00 | .7349 | .0782 | -.0926 | -.2046 | .7101 |
| | 103.00 | .7244 | .0053 | -.1057 | -.1682 | .7046 |
| | 76.00 | .8815 | .3715 | -.0632 | -.1472 | .9452 |
| | 80.00 | .8678 | .3227 | -.0700 | -.1671 | .9106 |
| | 85.00 | .8422 | .2605 | -.0792 | -.1861 | .8617 |
| | 90.00 | .8030 | .2016 | -.0848 | -.2016 | .8030 |
| | 95.00 | .7674 | .1391 | -.0877 | -.2055 | .7524 |
| | 100.00 | .7312 | .0631 | -.0954 | -.1891 | .7091 |
| | 105.00 | .7044 | -.0631 | -.1198 | -.1213 | .6967 |
| | 110.00 | .6534 | -.2219 | -.1043 | -.0150 | .6899 |
| | 115.00 | .6780 | -.5421 | -.2004 | .2048 | .8436 |
| | 118.00 | .6733 | -.7411 | -.2331 | .3383 | .9424 |
| | 121.00 | .6236 | -.8086 | -.2350 | .3668 | .9596 |
| | 125.00 | .5701 | -1.0021 | -.2157 | .4939 | 1.0418 |
| | 130.00 | .4791 | -1.2139 | -.1743 | .6219 | 1.1473 |
| | 135.00 | .3513 | -1.3208 | -.0924 | .6856 | 1.1824 |
| | 140.00 | .2623 | -1.5030 | -.0574 | .7652 | 1.3200 |
| | 145.00 | .1648 | -1.5480 | .0023 | .7529 | 1.3625 |
| | 150.00 | .1054 | -1.5879 | .0214 | .7027 | 1.4279 |
| | 155.00 | .0701 | -1.6298 | .0271 | .6253 | 1.5067 |
| | 160.00 | .0433 | -1.6627 | .0287 | .5280 | 1.5772 |
| | 162.70 | .0258 | -1.6807 | .0266 | .4752 | 1.6124 |
| | 151.00 | .0864 | -1.6353 | .0212 | .7172 | 1.4722 |
| | 155.00 | .0624 | -1.6532 | .0266 | .6421 | 1.5247 |
| | 160.00 | .0415 | -1.6999 | .0224 | .5424 | 1.6116 |
| | 165.00 | .0174 | -1.7319 | .0250 | .4315 | 1.6774 |
| | 170.00 | -.0005 | -1.7532 | .0187 | .3049 | 1.7265 |
| | 175.00 | -.0136 | -1.7705 | .0085 | .1678 | 1.7626 |
| | 177.00 | -.0150 | -1.7783 | .0050 | .1081 | 1.7751 |
| | 179.00 | -.0127 | -1.8029 | -.0007 | .0442 | 1.8024 |
| | 180.00 | -.0077 | -1.8060 | -.0008 | .0077 | 1.8060 |
| | 181.00 | 0000 | -1.8030 | .0005 | -.0315 | 1.8027 |
| | 183.00 | -.0003 | -1.8001 | -.0044 | -.0939 | 1.7976 |
| | 185.00 | -.0030 | -1.8032 | -.0077 | -.1542 | 1.7966 |
| 2211 | -5.00 | -.0691 | .7716 | -.0023 | -.0015 | .7747 |
| | -3.00 | -.0404 | .7675 | -.0010 | -.0001 | .7685 |
| | -1.00 | -.0128 | .7722 | 0000 | .0007 | .7723 |
| | .00 | .0037 | .7688 | -.0012 | .0037 | .7688 |
| | 1.00 | .0187 | .7707 | -.0012 | .0053 | .7709 |
| | 3.00 | .0504 | .7681 | -.0029 | .0101 | .7696 |
| | 5.00 | .0819 | .7662 | -.0026 | .0148 | .7704 |
| | 10.00 | .1558 | .7629 | -.0028 | .0209 | .7784 |
| | 15.00 | .2388 | .7579 | -.0061 | .0345 | .7939 |
| | 20.00 | .3286 | .7600 | -.0089 | .0489 | .8266 |
| | 25.00 | .4299 | .7598 | -.0164 | .0685 | .8703 |
| | 16.00 | .2579 | .7646 | -.0049 | .0371 | .8061 |
| | 20.00 | .3356 | .7556 | -.0086 | .0570 | .8248 |
| | 25.00 | .4361 | .7543 | -.0137 | .0764 | .8679 |
| | 30.00 | .5408 | .7433 | -.0186 | .0966 | .9141 |
| | 35.00 | .6406 | .7297 | -.0210 | .1062 | .9651 |
| | 40.00 | .7347 | .7014 | -.0244 | .1119 | 1.0096 |
| | 45.00 | .8144 | .6617 | -.0252 | .1080 | 1.0438 |
| | 50.00 | .8901 | .6112 | -.0317 | .1039 | 1.0748 |
| | 55.00 | .9301 | .5570 | -.0307 | .0772 | 1.0814 |
| | 60.00 | .9497 | .5000 | -.0288 | .0419 | 1.0725 |
| | 61.00 | .9506 | .5045 | -.0078 | .0197 | 1.0760 |
| | 65.00 | .9585 | .4616 | -.0087 | -.0133 | 1.0638 |
| | 70.00 | .9630 | .4079 | -.0120 | -.0539 | 1.0444 |
| | 75.00 | .9594 | .3567 | -.0150 | -.0962 | 1.0190 |
| | 80.00 | .9297 | .3117 | -.0200 | -.1456 | .9697 |
| | 85.00 | .9067 | .2588 | -.0225 | -.1788 | .9259 |
| | 90.00 | .8852 | .1994 | -.0258 | -.1994 | .8852 |
| | 95.00 | .8566 | .1411 | -.0272 | -.2153 | .8410 |
| | 100.00 | .8249 | .0765 | -.0280 | -.2185 | .7991 |
| | 105.00 | .8051 | .0268 | -.0291 | -.2072 | .7785 |
| | 76.00 | .9544 | .3517 | -.0188 | -.1104 | 1.0112 |
| | 80.00 | .9393 | .3055 | -.0236 | -.1378 | .9781 |
| | 85.00 | .9162 | .2520 | -.0272 | -.1711 | .9347 |
| | 90.00 | .8914 | .1932 | -.0292 | -.1932 | .8914 |
| | 95.00 | .8579 | .1380 | -.0292 | -.2123 | .8426 |
| | 100.00 | .8186 | .0640 | -.0321 | -.2051 | .7951 |
| | 105.00 | .7808 | -.0337 | -.0354 | -.1695 | .7629 |
| | 110.00 | .7403 | -.1797 | -.0378 | -.0843 | .7572 |
| | 115.00 | .6865 | -.3566 | -.0366 | .0331 | .7729 |
| | 118.00 | .6482 | -.4798 | -.0365 | .1193 | .7976 |

| Configuration | $\alpha$, deg | $C_N$ | $C_A$ | $C_m$ | $C_L$ | $C_D$ |
|---|---|---|---|---|---|---|
| 2211 | 120.00 | .5682 | -.4999 | -.0648 | .1488 | .7421 |
| | 125.00 | .5069 | -.7333 | -.0474 | .3100 | .8358 |
| | 130.00 | .4169 | -.9615 | -.0346 | .4839 | .9503 |
| | 135.00 | .3314 | -1.1739 | -.0217 | .5958 | 1.0644 |
| | 140.00 | .2486 | -1.3462 | -.0086 | .6749 | 1.1910 |
| | 145.00 | .1742 | -1.4755 | .0020 | .7036 | 1.3086 |
| | 150.00 | .1154 | -1.5675 | .0057 | .6839 | 1.4152 |
| | 155.00 | .0798 | -1.6384 | .0061 | .6201 | 1.5186 |
| | 160.00 | .0533 | -1.6930 | .0045 | .5289 | 1.6091 |
| 2212 | 61.00 | .9489 | .4962 | -.0098 | .0260 | 1.0705 |
| | 65.00 | .9617 | .4535 | -.0095 | -.0046 | 1.0633 |
| | 70.00 | .9614 | .4001 | -.0103 | -.0472 | 1.0402 |
| | 75.00 | .9593 | .3481 | -.0111 | -.0879 | 1.0167 |
| | 80.00 | .9360 | .2961 | -.0128 | -.1291 | .9732 |
| | 85.00 | .9176 | .2365 | -.0136 | -.1556 | .9347 |
| | 90.00 | .9025 | .1716 | -.0135 | -.1716 | .9025 |
| | 95.00 | .8792 | .1023 | -.0097 | -.1785 | .8670 |
| | 100.00 | .8592 | .0150 | -.0056 | -.1640 | .8435 |
| | 103.00 | .8455 | -.0379 | -.0002 | -.1533 | .8323 |
| | 76.00 | .9460 | .3376 | -.0154 | -.0987 | .9996 |
| | 80.00 | .9395 | .2950 | -.0148 | -.1274 | .9764 |
| | 85.00 | .9225 | .2297 | -.0168 | -.1484 | .9390 |
| | 90.00 | .8995 | .1702 | -.0147 | -.1702 | .8995 |
| | 95.00 | .8760 | .0974 | -.0119 | -.1734 | .8642 |
| | 100.00 | .8488 | .0092 | -.0087 | -.1565 | .8343 |
| | 105.00 | .8205 | -.0943 | .0002 | -.1213 | .8169 |
| | 110.00 | .7950 | -.2193 | .0119 | -.0658 | .8221 |
| | 115.00 | .7471 | -.3513 | .0218 | .0027 | .8256 |
| | 118.00 | .7107 | -.4294 | .0280 | .0454 | .8291 |
| | 120.00 | .6671 | -.4336 | .0055 | .0419 | .7945 |
| | 125.00 | .5887 | -.5949 | .0215 | .1496 | .8234 |
| | 130.00 | .4901 | -.7696 | .0319 | .2745 | .8701 |
| | 135.00 | .4000 | -.9005 | .0358 | .3540 | .9196 |
| | 140.00 | .3148 | -1.0411 | .0379 | .4281 | .9999 |
| | 145.00 | .2401 | -1.1741 | .0374 | .4767 | 1.0995 |
| | 150.00 | .1839 | -1.2904 | .0340 | .4859 | 1.2095 |
| | 155.00 | .1437 | -1.3974 | .0280 | .4604 | 1.3272 |
| | 160.00 | .1038 | -1.4884 | .0198 | .4116 | 1.4341 |
| 2213 | 61.00 | .9459 | .5064 | -.0078 | .0157 | 1.0728 |
| | 65.00 | .9550 | .4629 | -.0098 | -.0159 | 1.0611 |
| | 70.00 | .9613 | .4140 | -.0115 | -.0602 | 1.0449 |
| | 75.00 | .9576 | .3585 | -.0184 | -.0985 | 1.0178 |
| | 80.00 | .9330 | .3085 | -.0260 | -.1418 | .9724 |
| | 85.00 | .9194 | .2446 | -.0371 | -.1636 | .9372 |
| | 90.00 | .8964 | .1822 | -.0463 | -.1822 | .8964 |
| | 95.00 | .8682 | .1254 | -.0518 | -.2006 | .8540 |
| | 100.00 | .8434 | .0578 | -.0608 | -.2034 | .8206 |
| | 103.00 | .8302 | .0003 | -.0710 | -.1871 | .8088 |
| | 76.00 | .9481 | .3497 | -.0214 | -.1099 | 1.0045 |
| | 80.00 | .9393 | .3004 | -.0291 | -.1327 | .9772 |
| | 85.00 | .9246 | .2390 | -.0389 | -.1575 | .9419 |
| | 90.00 | .9013 | .1769 | -.0472 | -.1769 | .9013 |
| | 95.00 | .8698 | .1197 | -.0528 | -.1950 | .8561 |
| | 100.00 | .8399 | .0432 | -.0635 | -.1883 | .8196 |
| | 105.00 | .8126 | -.0725 | -.0877 | -.1403 | .8037 |
| | 110.00 | .8012 | -.2978 | -.1322 | .0058 | .8548 |
| | 115.00 | .7767 | -.5445 | -.1712 | .1653 | .9340 |
| | 118.00 | .7658 | -.7427 | -.2068 | .2963 | 1.0249 |
| | 120.00 | .7255 | -.7771 | -.2259 | .3102 | 1.0169 |
| | 125.00 | .6516 | -1.0445 | -.2121 | .4819 | 1.1329 |
| | 130.00 | .5250 | -1.2799 | -.1733 | .6430 | 1.2249 |
| | 135.00 | .3902 | -1.3672 | -.0934 | .6909 | 1.2427 |
| | 140.00 | .2970 | -1.5628 | -.0630 | .7771 | 1.3881 |
| | 145.00 | .1899 | -1.6133 | -.0070 | .7698 | 1.4304 |
| | 150.00 | .1158 | -1.6491 | .0086 | .7243 | 1.4861 |
| | 155.00 | .0756 | -1.6963 | .0130 | .6484 | 1.5694 |
| | 160.00 | .0479 | -1.7329 | .0136 | .5477 | 1.6448 |
| 3211 | -5.00 | -.0667 | .8268 | .0002 | .0057 | .8295 |
| | -3.00 | -.0369 | .8220 | -.0006 | .0062 | .8228 |
| | -1.00 | -.0115 | .8241 | -.0001 | .0029 | .8242 |
| | .00 | .0024 | .8244 | -.0003 | .0024 | .8244 |
| | 1.00 | .0200 | .8211 | -.0017 | .0057 | .8213 |
| | 3.00 | .0464 | .8211 | -.0025 | .0033 | .8224 |
| | 5.00 | .0765 | .8191 | -.0032 | .0048 | .8227 |
| | 10.00 | .1461 | .8213 | -.0044 | .0013 | .8342 |
| | 15.00 | .2251 | .8175 | -.0070 | .0058 | .8479 |
| | 20.00 | .3122 | .8239 | -.0088 | .0116 | .8810 |
| | 25.00 | .4249 | .8266 | -.0170 | .0358 | .9288 |

TABLE I. - AERODYNAMIC CHARACTERISTICS OF MODELS - Continued

$M_\infty = 6.0$

| Configuration | α, deg | $C_N$ | $C_A$ | $C_m$ | $C_L$ | $C_D$ |
|---|---|---|---|---|---|---|
| 3211 | 16.00 | .2451 | .8214 | -.0082 | .0092 | .8572 |
| | 20.00 | .3201 | .8210 | -.0103 | .0200 | .8810 |
| | 25.00 | .4278 | .8224 | -.0139 | .0401 | .9261 |
| | 30.00 | .5382 | .8142 | -.0144 | .0590 | .9742 |
| | 35.00 | .6458 | .8035 | -.0136 | .0681 | 1.0286 |
| | 40.00 | .7483 | .7743 | -.0153 | .0755 | 1.0741 |
| | 45.00 | .8329 | .7250 | -.0134 | .0763 | 1.1017 |
| | 50.00 | .9021 | .6548 | -.0136 | .0783 | 1.1119 |
| | 55.00 | .9487 | .5877 | -.0119 | .0628 | 1.1142 |
| | 60.00 | .9689 | .5054 | -.0092 | .0468 | 1.0918 |
| | 61.00 | .9686 | .5045 | .0179 | .0284 | 1.0918 |
| | 65.00 | .9797 | .4514 | .0125 | .0049 | 1.0787 |
| | 70.00 | .9822 | .4006 | .0101 | -.0405 | 1.0600 |
| | 75.00 | .9803 | .3437 | .0051 | -.0783 | 1.0359 |
| | 80.00 | .9652 | .2938 | .0001 | -.1217 | 1.0015 |
| | 85.00 | .9501 | .2432 | -.0026 | -.1595 | .9677 |
| | 90.00 | .9317 | .1896 | -.0045 | -.1896 | .9317 |
| | 95.00 | .9085 | .1320 | -.0058 | -.2107 | .8935 |
| | 100.00 | .8758 | .0680 | -.0072 | -.2191 | .8507 |
| | 103.00 | .8558 | .0110 | -.0092 | -.2032 | .8314 |
| | 76.00 | .9754 | .3288 | .0022 | -.0830 | 1.0259 |
| | 80.00 | .9702 | .2861 | -.0013 | -.1133 | 1.0052 |
| | 85.00 | .9519 | .2352 | -.0052 | -.1513 | .9688 |
| | 90.00 | .9319 | .1779 | -.0070 | -.1779 | .9319 |
| | 95.00 | .9038 | .1270 | -.0070 | -.2053 | .8893 |
| | 100.00 | .8708 | .0546 | -.0098 | -.2050 | .8481 |
| | 105.00 | .8291 | -.0342 | -.0129 | -.1816 | .8098 |
| | 110.00 | .7888 | -.1779 | -.0165 | -.1026 | .8020 |
| | 115.00 | .7293 | -.3527 | -.0170 | .0115 | .8101 |
| | 118.00 | .6889 | -.4740 | -.0182 | .0951 | .8308 |
| | 120.00 | .6212 | -.5032 | -.0338 | .1252 | .7896 |
| | 125.00 | .5357 | -.7448 | -.0392 | .3028 | .8660 |
| | 130.00 | .4452 | -.9593 | -.0180 | .4487 | .9576 |
| | 135.00 | .3615 | -1.1622 | -.0066 | .5662 | 1.0774 |
| | 140.00 | .2799 | -1.3332 | .0042 | .6426 | 1.2012 |
| | 145.00 | .1977 | -1.4582 | .0111 | .6745 | 1.3079 |
| | 150.00 | .1332 | -1.5606 | .0117 | .6649 | 1.4181 |
| | 155.00 | .0939 | -1.6290 | .0116 | .6033 | 1.5161 |
| | 160.00 | .0664 | -1.6831 | .0109 | .5133 | 1.6043 |
| 3212 | 61.00 | .9688 | .5076 | .0137 | .0257 | 1.0934 |
| | 65.00 | .9830 | .4471 | .0119 | .0102 | 1.0799 |
| | 70.00 | .9923 | .3903 | .0116 | -.0274 | 1.0660 |
| | 75.00 | .9967 | .3278 | .0082 | -.0586 | 1.0475 |
| | 80.00 | .9717 | .2817 | .0082 | -.1087 | 1.0058 |
| | 85.00 | .9632 | .2195 | .0067 | -.1347 | .9786 |
| | 90.00 | .9480 | .1603 | .0084 | -.1603 | .9480 |
| | 95.00 | .9328 | .0894 | .0125 | -.1704 | .9215 |
| | 100.00 | .9158 | .0019 | .0170 | -.1609 | .9016 |
| | 103.00 | .9005 | -.0614 | .0232 | -.1428 | .8912 |
| | 76.00 | .9785 | .3191 | .0048 | -.0729 | 1.0266 |
| | 80.00 | .9734 | .2724 | .0049 | -.0993 | 1.0059 |
| | 85.00 | .9632 | .2153 | .0052 | -.1305 | .9783 |
| | 90.00 | .9480 | .1492 | .0044 | -.1492 | .9480 |
| | 95.00 | .9294 | .0846 | .0087 | -.1653 | .9185 |
| | 100.00 | .9029 | .0011 | .0141 | -.1579 | .8890 |
| | 105.00 | .8807 | -.1039 | .0218 | -.1275 | .8776 |
| | 110.00 | .8520 | -.2237 | .0314 | -.0812 | .8771 |
| | 115.00 | .8021 | -.3640 | .0401 | -.0091 | .8808 |
| | 118.00 | .7589 | -.4367 | .0436 | .0293 | .8751 |
| | 120.00 | .6865 | -.4511 | .0225 | .0474 | .8201 |
| | 125.00 | .5988 | -.6136 | .0292 | .1591 | .8424 |
| | 130.00 | .4977 | -.7658 | .0369 | .2667 | .8735 |
| | 135.00 | .4126 | -.8956 | .0432 | .3415 | .9251 |
| | 140.00 | .3220 | -1.0364 | .0430 | .4195 | 1.0009 |
| | 145.00 | .2417 | -1.1713 | .0383 | .4738 | 1.0981 |
| | 150.00 | .1867 | -1.2897 | .0315 | .4832 | 1.2103 |
| | 155.00 | .1401 | -1.3910 | .0258 | .4609 | 1.3199 |
| | 160.00 | .1011 | -1.4819 | .0164 | .4118 | 1.4271 |
| 3213 | 61.00 | .9720 | .5062 | .0137 | .0285 | 1.0955 |
| | 65.00 | .9895 | .4514 | .0128 | .0091 | 1.0876 |
| | 70.00 | .9923 | .3965 | .0099 | -.0332 | 1.0681 |
| | 75.00 | .9953 | .3435 | .0041 | -.0742 | 1.0503 |
| | 80.00 | .9751 | .2860 | -.0067 | -.1124 | 1.0100 |
| | 85.00 | .9633 | .2285 | -.0162 | -.1436 | .9795 |
| | 90.00 | .9499 | .1710 | -.0241 | -.1710 | .9499 |
| | 95.00 | .9234 | .1164 | -.0299 | -.1965 | .9098 |
| | 100.00 | .8985 | .0435 | -.0409 | -.1988 | .8773 |
| | 103.00 | .8899 | -.0246 | -.0543 | -.1762 | .8726 |
| | 76.00 | .9818 | .3343 | .0009 | -.0869 | 1.0335 |
| | 80.00 | .9752 | .2886 | -.0073 | -.1149 | 1.0105 |
| | 85.00 | .9650 | .2277 | -.0184 | -.1427 | .9811 |
| | 90.00 | .9483 | .1689 | -.0258 | -.1689 | .9483 |
| | 95.00 | .9217 | .1080 | -.0327 | -.1879 | .9088 |
| | 100.00 | .8936 | .0428 | -.0412 | -.1973 | .8726 |
| | 105.00 | .8685 | -.0790 | -.0673 | -.1485 | .8593 |
| | 110.00 | .8554 | -.2908 | -.1096 | -.0193 | .9033 |
| | 115.00 | .8273 | -.5545 | -.1571 | .1529 | .9841 |
| | 118.00 | .8145 | -.7471 | -.1900 | .2773 | 1.0699 |

| Configuration | α, deg | $C_N$ | $C_A$ | $C_m$ | $C_L$ | $C_D$ |
|---|---|---|---|---|---|---|
| 3213 | 120.00 | .7424 | -.7994 | -.2106 | .3211 | 1.0426 |
| | 125.00 | .6580 | -1.0666 | -.2032 | .4963 | 1.1508 |
| | 130.00 | .5439 | -1.2689 | -.1641 | .6224 | 1.2322 |
| | 135.00 | .4255 | -1.4425 | -.1155 | .7191 | 1.3209 |
| | 140.00 | .3140 | -1.5525 | -.0598 | .7574 | 1.3911 |
| | 145.00 | .2015 | -1.5991 | -.0053 | .7521 | 1.4255 |
| | 150.00 | .1229 | -1.6407 | .0083 | .7140 | 1.4824 |
| | 155.00 | .0813 | -1.6952 | .0126 | .6427 | 1.5708 |
| | 160.00 | .0537 | -1.7298 | .0136 | .5411 | 1.6439 |
| 1311 | -5.00 | -.0058 | .5842 | -.0077 | -.0346 | .5895 |
| | -3.00 | -.0498 | .5822 | -.0053 | -.0192 | .5840 |
| | -1.00 | -.0113 | .5829 | -.0030 | -.0011 | .5830 |
| | .00 | .0074 | .5844 | -.0023 | .0074 | .5844 |
| | 1.00 | .0297 | .5828 | -.0027 | .0195 | .5832 |
| | 3.00 | .0629 | .5848 | .0020 | .0322 | .5873 |
| | 5.00 | .0999 | .5799 | .0036 | .0490 | .5864 |
| | 10.00 | .1915 | .5811 | .0099 | .0877 | .6056 |
| | 15.00 | .2968 | .5809 | .0114 | .1364 | .6379 |
| | 20.00 | .4065 | .5862 | .0127 | .1815 | .6898 |
| | 25.00 | .5322 | .5865 | .0077 | .2344 | .7565 |
| | 16.00 | .3213 | .5930 | .0147 | .1454 | .6586 |
| | 20.00 | .4100 | .5857 | .0158 | .1850 | .6906 |
| | 25.00 | .5365 | .5838 | .0122 | .2395 | .7558 |
| | 30.00 | .6612 | .5814 | .0086 | .2819 | .8341 |
| | 35.00 | .7879 | .5796 | .0035 | .3130 | .9267 |
| | 40.00 | .9073 | .5736 | -.0014 | .3263 | 1.0226 |
| | 45.00 | 1.0127 | .5617 | -.0067 | .3189 | 1.1133 |
| | 50.00 | 1.0970 | .5479 | -.0112 | .2854 | 1.1925 |
| | 55.00 | 1.1561 | .5298 | -.0142 | .2291 | 1.2509 |
| | 60.00 | 1.1865 | .5055 | -.0138 | .1555 | 1.2803 |
| | 61.00 | 1.1871 | .4930 | .0113 | .1443 | 1.2773 |
| | 65.00 | 1.1750 | .4740 | .0087 | .0754 | 1.2833 |
| | 70.00 | 1.1756 | .4411 | .0013 | -.0056 | 1.2744 |
| | 75.00 | 1.1613 | .4076 | -.0059 | -.0932 | 1.2269 |
| | 80.00 | 1.1491 | .3643 | -.0152 | -.1593 | 1.1949 |
| | 85.00 | 1.1192 | .3149 | -.0235 | -.2162 | 1.1423 |
| | 90.00 | 1.0876 | .2593 | -.0307 | -.2593 | 1.0876 |
| | 95.00 | 1.0266 | .2005 | -.0360 | -.2892 | 1.0052 |
| | 100.00 | .9732 | .1318 | -.0408 | -.3023 | .9552 |
| | 103.00 | .9570 | .0708 | -.0438 | -.2843 | .9166 |
| | 76.00 | 1.1491 | .3916 | -.0089 | -.1020 | 1.2097 |
| | 80.00 | 1.1321 | .3597 | -.0152 | -.1576 | 1.1774 |
| | 85.00 | 1.1045 | .3130 | -.0240 | -.2155 | 1.1276 |
| | 90.00 | 1.0732 | .2520 | -.0300 | -.2520 | 1.0732 |
| | 95.00 | 1.0256 | .1945 | -.0350 | -.2832 | 1.0047 |
| | 100.00 | .9765 | .1223 | -.0410 | -.2900 | .9405 |
| | 105.00 | .9191 | .0222 | -.0466 | -.2593 | .8821 |
| | 110.00 | .8640 | -.1300 | -.0515 | -.1733 | .8564 |
| | 115.00 | .7928 | -.3061 | -.0499 | -.0577 | .8479 |
| | 118.00 | .7468 | -.4259 | -.0502 | .0254 | .8593 |
| | 121.00 | .7088 | -.4902 | -.0386 | .0551 | .8601 |
| | 125.00 | .6276 | -.6646 | -.0332 | .1844 | .8953 |
| | 130.00 | .5244 | -.8793 | -.0216 | .3365 | .9669 |
| | 135.00 | .4249 | -1.0841 | -.0072 | .4661 | 1.0671 |
| | 140.00 | .3269 | -1.2543 | .0076 | .5559 | 1.1709 |
| | 145.00 | .2312 | -1.3838 | .0176 | .6043 | 1.2661 |
| | 150.00 | .1570 | -1.4820 | .0218 | .6050 | 1.3619 |
| | 155.00 | .1384 | -1.5507 | .0225 | .5572 | 1.4512 |
| | 160.00 | .0790 | -1.6076 | .0230 | .4756 | 1.5376 |
| | 162.70 | .0624 | -1.6384 | .0233 | .4276 | 1.5829 |
| | 151.00 | .1429 | -1.5542 | .0181 | .6285 | 1.4286 |
| | 155.00 | .1087 | -1.5937 | .0226 | .5750 | 1.4903 |
| | 160.00 | .0870 | -1.6498 | .0261 | .4825 | 1.5801 |
| | 165.00 | .0550 | -1.6959 | .0214 | .3858 | 1.6523 |
| | 170.00 | .0309 | -1.7122 | .0184 | .2669 | 1.6916 |
| | 175.00 | .0104 | -1.7326 | .0109 | .1406 | 1.7269 |
| | 177.00 | .0065 | -1.7407 | .0067 | .0846 | 1.7386 |
| | 179.00 | -.0213 | -1.7445 | .0022 | .0317 | 1.7442 |
| | 180.00 | -.0039 | -1.7409 | .0006 | .0039 | 1.7409 |
| | 181.00 | -.0091 | -1.7406 | -.0018 | -.0213 | 1.7405 |
| | 183.00 | -.0208 | -1.7464 | -.0076 | -.0766 | 1.7451 |
| | 185.00 | -.0274 | -1.7522 | -.0124 | -.1254 | 1.7479 |
| 1121 | -5.00 | -.0640 | .8538 | .0113 | .0106 | .8562 |
| | -3.00 | -.0320 | .8539 | .0056 | .0127 | .8544 |
| | -1.00 | -.0027 | .8563 | .0010 | .0122 | .8562 |
| | .00 | .0127 | .8563 | -.0022 | .0127 | .8563 |
| | 1.00 | .0270 | .8553 | -.0043 | .0121 | .8557 |
| | 3.00 | .0593 | .8534 | -.0101 | .0145 | .8553 |
| | 5.00 | .0898 | .8470 | -.0152 | .0157 | .8516 |
| | 10.00 | .1659 | .8384 | -.0286 | .0178 | .8545 |
| | 15.00 | .2372 | .8246 | -.0413 | .0157 | .8579 |
| | 20.00 | .3126 | .8183 | -.0568 | .0138 | .8758 |
| | 25.00 | .3791 | .8017 | -.0709 | .0048 | .8868 |

TABLE I. - AERODYNAMIC CHARACTERISTICS OF MODELS - Continued

$M_\infty = 6.0$

| Configuration | α, deg | $C_N$ | $C_A$ | $C_m$ | $C_L$ | $C_D$ |
|---|---|---|---|---|---|---|
| 1121 | 16.00 | .2549 | .8135 | -.0494 | .0208 | .8523 |
| | 20.00 | .3127 | .7970 | -.0608 | .0212 | .8558 |
| | 25.00 | .3729 | .7754 | -.0722 | .0103 | .8604 |
| | 30.00 | .4359 | .7531 | -.0843 | .0009 | .8702 |
| | 35.00 | .4858 | .7225 | -.0938 | -.0165 | .8704 |
| | 40.00 | .5315 | .6907 | -.1026 | -.0368 | .8707 |
| | 45.00 | .5627 | .6566 | -.1093 | -.0664 | .8622 |
| | 50.00 | .5781 | .6270 | -.1140 | -.1087 | .8458 |
| | 55.00 | .5792 | .5760 | -.1143 | -.1396 | .8049 |
| | 60.00 | .5776 | .5148 | -.1145 | -.1570 | .7576 |
| | 61.00 | .5847 | .5338 | -.0965 | -.1834 | .7702 |
| | 65.00 | .5788 | .4942 | -.0964 | -.2033 | .7335 |
| | 70.00 | .5580 | .4401 | -.0955 | -.2228 | .6748 |
| | 75.00 | .5353 | .3877 | -.0928 | -.2360 | .6174 |
| | 80.00 | .5098 | .3329 | -.0888 | -.2393 | .5599 |
| | 85.00 | .4822 | .2748 | -.0847 | -.2318 | .5044 |
| | 90.00 | .4521 | .2146 | -.0786 | -.2146 | .4521 |
| | 95.00 | .4250 | .1526 | -.0731 | -.1890 | .4101 |
| | 100.00 | .3951 | .0665 | -.0681 | -.1341 | .3776 |
| | 103.00 | .3802 | .0064 | -.0665 | -.0917 | .3691 |
| | 80.00 | .5118 | .3046 | -.0842 | -.2111 | .5569 |
| | 85.00 | .4858 | .2507 | -.0795 | -.2074 | .5059 |
| | 90.00 | .4539 | .1976 | -.0738 | -.1976 | .4539 |
| | 95.00 | .4248 | .1342 | -.0681 | -.1707 | .4115 |
| | 100.00 | .3965 | .0629 | -.0634 | -.1308 | .3796 |
| | 105.00 | .3644 | -.0426 | -.0611 | -.0532 | .3630 |
| | 110.00 | .3337 | -.1830 | -.0570 | .0579 | .3762 |
| | 115.00 | .3031 | -.3556 | -.0504 | .1942 | .4250 |
| | 120.00 | .2631 | -.5449 | -.0408 | .3403 | .5003 |
| | 121.00 | .2555 | -.5701 | -.0409 | .3571 | .5126 |
| | 125.00 | .2221 | -.7430 | -.0266 | .4812 | .6081 |
| | 130.00 | .1781 | -.9630 | -.0092 | .6232 | .7554 |
| | 135.00 | .1297 | -1.1604 | .0029 | .7288 | .9122 |
| | 140.00 | .0949 | -1.3234 | .0161 | .7780 | 1.0748 |
| | 145.00 | .0629 | -1.4370 | .0221 | .7727 | 1.2132 |
| | 150.00 | .0470 | -1.5242 | .0297 | .7214 | 1.3435 |
| | 155.00 | .0309 | -1.5958 | .0307 | .6464 | 1.4594 |
| | 160.00 | .0155 | -1.6505 | .0295 | .5499 | 1.5563 |
| | 165.00 | .0047 | -1.6939 | .0260 | .4339 | 1.6374 |
| | 153.00 | .0237 | -1.6043 | .0244 | .7072 | 1.4402 |
| | 155.00 | .0175 | -1.6292 | .0257 | .6726 | 1.4840 |
| | 160.00 | .0048 | -1.6836 | .0243 | .5713 | 1.5837 |
| | 165.00 | -.0068 | -1.7344 | .0181 | .4555 | 1.6735 |
| | 170.00 | -.0147 | -1.7507 | .0097 | .3185 | 1.7215 |
| | 175.00 | -.0125 | -1.7684 | .0035 | .1666 | 1.7606 |
| | 177.00 | -.0101 | -1.7686 | .0014 | .1027 | 1.7657 |
| | 179.00 | -.0128 | -1.7732 | -.0037 | .0437 | 1.7727 |
| | 180.00 | -.0091 | -1.7980 | -.0055 | .0091 | 1.7980 |
| | 181.00 | -.0080 | -1.8011 | -.0068 | -.0234 | 1.8009 |
| | 183.00 | -.0081 | -1.7980 | -.0091 | -.0860 | 1.7959 |
| | 185.00 | -.0082 | -1.7687 | -.0129 | -.1460 | 1.7627 |
| 1122 | 61.00 | .5865 | .5289 | -.0960 | -.1783 | .7694 |
| | 65.00 | .5791 | .4861 | -.0953 | -.1959 | .7302 |
| | 70.00 | .5617 | .4292 | -.0922 | -.2112 | .6746 |
| | 75.00 | .5387 | .3733 | -.0876 | -.2212 | .6169 |
| | 80.00 | .5193 | .3125 | -.0809 | -.2176 | .5657 |
| | 85.00 | .4979 | .2494 | -.0731 | -.2051 | .5177 |
| | 90.00 | .4749 | .1802 | -.0635 | -.1802 | .4749 |
| | 95.00 | .4548 | .0987 | -.0521 | -.1379 | .4445 |
| | 100.00 | .4345 | .0012 | -.0376 | -.0767 | .4277 |
| | 103.00 | .4254 | -.0648 | -.0282 | -.0326 | .4291 |
| | 80.00 | .5185 | .2883 | -.0769 | -.1939 | .5607 |
| | 85.00 | .4978 | .2298 | -.0690 | -.1855 | .5159 |
| | 90.00 | .4693 | .1678 | -.0603 | -.1678 | .4693 |
| | 95.00 | .4513 | .0919 | -.0490 | -.1309 | .4416 |
| | 100.00 | .4319 | .0034 | -.0356 | -.0783 | .4247 |
| | 105.00 | .4116 | -.1011 | -.0202 | -.0088 | .4238 |
| | 110.00 | .3919 | -.2201 | -.0032 | .0728 | .4436 |
| | 115.00 | .3659 | -.3486 | .0135 | .1613 | .4789 |
| | 120.00 | .3290 | -.4812 | .0283 | .2522 | .5255 |
| | 121.00 | .3221 | -.4992 | .0312 | .2620 | .5332 |
| | 125.00 | .2918 | -.6085 | .0465 | .3311 | .5880 |
| | 130.00 | .2426 | -.7571 | .0570 | .4241 | .6725 |
| | 135.00 | .1991 | -.8943 | .0617 | .4916 | .7732 |
| | 140.00 | .1661 | -1.0220 | .0654 | .5297 | .8897 |
| | 145.00 | .1341 | -1.1418 | .0626 | .5451 | 1.0122 |
| | 150.00 | .1080 | -1.2581 | .0579 | .5356 | 1.1435 |
| | 155.00 | .0854 | -1.3559 | .0532 | .4956 | 1.2650 |
| | 160.00 | .0603 | -1.4481 | .0441 | .4386 | 1.3814 |
| | 165.00 | .0376 | -1.5190 | .0335 | .3568 | 1.4769 |

| Configuration | α, deg | $C_N$ | $C_A$ | $C_m$ | $C_L$ | $C_D$ |
|---|---|---|---|---|---|---|
| 1122 | 153.00 | .0821 | -1.3592 | .0485 | .5439 | 1.2484 |
| | 155.00 | .0732 | -1.4021 | .0459 | .5263 | 1.3016 |
| | 160.00 | .0478 | -1.4892 | .0366 | .4644 | 1.4157 |
| | 165.00 | .0286 | -1.5635 | .0263 | .3771 | 1.5176 |
| | 170.00 | .0132 | -1.5950 | .0169 | .2640 | 1.5731 |
| | 175.00 | .0002 | -1.6224 | .0060 | .1412 | 1.6162 |
| | 177.00 | -.0037 | -1.6224 | .0018 | .0886 | 1.6200 |
| | 179.00 | -.0065 | -1.6359 | -.0032 | .0350 | 1.6356 |
| | 180.00 | -.0041 | -1.6359 | -.0038 | .0041 | 1.6359 |
| | 181.00 | -.0080 | -1.6392 | -.0072 | -.0206 | 1.6391 |
| | 183.00 | -.0094 | -1.6372 | -.0113 | -.0763 | 1.6355 |
| | 185.00 | -.0198 | -1.6198 | -.0190 | -.1215 | 1.6153 |
| 1123 | 61.00 | .5820 | .5335 | -.0975 | -.1844 | .7676 |
| | 65.00 | .5777 | .4922 | -.0970 | -.2020 | .7316 |
| | 70.00 | .5645 | .4371 | -.0976 | -.2176 | .6800 |
| | 75.00 | .5471 | .3811 | -.0978 | -.2265 | .6271 |
| | 80.00 | .5219 | .3219 | -.0982 | -.2264 | .5699 |
| | 85.00 | .4977 | .2621 | -.0975 | -.2177 | .5186 |
| | 90.00 | .4710 | .1977 | -.0958 | -.1977 | .4710 |
| | 95.00 | .4431 | .1338 | -.0951 | -.1719 | .4297 |
| | 100.00 | .4193 | .0361 | -.1038 | -.1084 | .4066 |
| | 103.00 | .4200 | .0200 | -.1059 | -.1140 | .4047 |
| | 80.00 | .5170 | .2970 | -.0928 | -.2027 | .5607 |
| | 85.00 | .4935 | .2424 | -.0923 | -.1985 | .5127 |
| | 90.00 | .4630 | .1869 | -.0902 | -.1869 | .4630 |
| | 95.00 | .4361 | .1258 | -.0892 | -.1633 | .4234 |
| | 100.00 | .4132 | .0431 | -.0953 | -.1142 | .3994 |
| | 105.00 | .4043 | -.0998 | -.1186 | -.0082 | .4163 |
| | 110.00 | .4086 | -.3203 | -.1569 | .1613 | .4935 |
| | 115.00 | .3974 | -.5281 | -.1718 | .3107 | .5834 |
| | 120.00 | .3882 | -.8093 | -.1964 | .5068 | .7409 |
| | 121.00 | .3827 | -.8587 | -.2013 | .5390 | .7703 |
| | 125.00 | .3409 | -1.0454 | -.1869 | .6603 | .8788 |
| | 130.00 | .2711 | -1.2534 | -.1476 | .7859 | 1.0134 |
| | 135.00 | .1786 | -1.3606 | -.0722 | .8358 | 1.0884 |
| | 140.00 | .1259 | -1.5393 | -.0372 | .8930 | 1.2601 |
| | 145.00 | .0594 | -1.5774 | .0135 | .8561 | 1.3262 |
| | 150.00 | .0351 | -1.6155 | .0285 | .7774 | 1.4167 |
| | 155.00 | .0165 | -1.6532 | .0325 | .6837 | 1.5053 |
| | 160.00 | .0016 | -1.6923 | .0338 | .5773 | 1.5907 |
| | 165.00 | -.0126 | -1.7219 | .0275 | .4579 | 1.6599 |
| | 153.00 | .0112 | -1.6691 | .0262 | .7478 | 1.4923 |
| | 155.00 | -.0001 | -1.6853 | .0261 | .7123 | 1.5274 |
| | 160.00 | -.0075 | -1.7241 | .0286 | .5967 | 1.6175 |
| | 165.00 | -.0203 | -1.7664 | .0215 | .4768 | 1.7009 |
| | 170.00 | -.0195 | -1.7968 | .0139 | .3312 | 1.7661 |
| | 175.00 | -.0148 | -1.7969 | .0067 | .1713 | 1.7888 |
| | 177.00 | -.0124 | -1.7970 | .0042 | .1065 | 1.7939 |
| | 179.00 | -.0127 | -1.8051 | -.0014 | .0442 | 1.8046 |
| | 180.00 | -.0090 | -1.8051 | -.0021 | .0090 | 1.8051 |
| | 181.00 | -.0078 | -1.8052 | -.0041 | -.0237 | 1.8050 |
| | 183.00 | -.0081 | -1.8051 | -.0090 | -.0864 | 1.8030 |
| | 185.00 | -.0070 | -1.8102 | -.0121 | -.1508 | 1.8039 |
| 2121 | -5.00 | -.0570 | .8466 | .0060 | .0170 | .8484 |
| | -3.00 | -.0265 | .8450 | .0010 | .0177 | .8452 |
| | -1.00 | -.0037 | .8525 | -.0019 | .0112 | .8525 |
| | .00 | .0089 | .8486 | -.0025 | .0089 | .8486 |
| | 1.00 | .0214 | .8481 | -.0038 | .0066 | .8484 |
| | 3.00 | .0472 | .8434 | -.0076 | .0030 | .8447 |
| | 5.00 | .0825 | .8421 | -.0137 | .0088 | .8461 |
| | 10.00 | .1495 | .8397 | -.0221 | .0014 | .8529 |
| | 15.00 | .2169 | .8322 | -.0319 | -.0059 | .8599 |
| | 20.00 | .2955 | .8316 | -.0446 | -.0067 | .8825 |
| | 25.00 | .3663 | .8276 | -.0555 | -.0178 | .9049 |
| | 16.00 | .2311 | .8245 | -.0339 | -.0052 | .8563 |
| | 20.00 | .2863 | .8131 | -.0414 | -.0091 | .8620 |
| | 25.00 | .3609 | .8085 | -.0517 | -.0146 | .8853 |
| | 30.00 | .4312 | .7978 | -.0588 | -.0255 | .9065 |
| | 35.00 | .4955 | .7744 | -.0666 | -.0383 | .9185 |
| | 40.00 | .5543 | .7402 | -.0741 | -.0512 | .9233 |
| | 45.00 | .5948 | .6913 | -.0774 | -.0682 | .9094 |
| | 50.00 | .6187 | .6308 | -.0790 | -.0855 | .8794 |
| | 55.00 | .6225 | .5709 | -.0788 | -.1106 | .8374 |
| | 60.00 | .6303 | .5046 | -.0823 | -.1218 | .7982 |
| | 61.00 | .6355 | .5196 | -.0693 | -.1464 | .8077 |
| | 65.00 | .6383 | .4726 | -.0690 | -.1585 | .7782 |
| | 70.00 | .6288 | .4143 | -.0692 | -.1742 | .7326 |
| | 75.00 | .6161 | .3608 | -.0684 | -.1890 | .6885 |
| | 80.00 | .5924 | .3079 | -.0676 | -.2003 | .6369 |
| | 85.00 | .5725 | .2504 | -.0659 | -.1995 | .5921 |
| | 90.00 | .5520 | .1979 | -.0628 | -.1979 | .5520 |
| | 95.00 | .5245 | .1380 | -.0592 | -.1832 | .5105 |
| | 100.00 | .4991 | .0661 | -.0569 | -.1518 | .4800 |
| | 103.00 | .4790 | -.0023 | -.0567 | -.1056 | .4672 |

TABLE I. - AERODYNAMIC CHARACTERISTICS OF MODELS - Continued

$M_\infty = 6.0$

| Configuration | α, deg | $C_N$ | $C_A$ | $C_m$ | $C_L$ | $C_D$ |
|---|---|---|---|---|---|---|
| 2121 | 77.00 | .6010 | .3350 | -.0687 | -.1912 | .6610 |
| | 80.00 | .5872 | .3030 | -.0681 | -.1964 | .6309 |
| | 85.00 | .5644 | .2484 | -.0657 | -.1983 | .5840 |
| | 90.00 | .5440 | .1948 | -.0625 | -.1948 | .5440 |
| | 95.00 | .5158 | .1388 | -.0586 | -.1833 | .5017 |
| | 100.00 | .4892 | .0703 | -.0561 | -.1541 | .4696 |
| | 105.00 | .4604 | -.0331 | -.0553 | -.0872 | .4533 |
| | 110.00 | .4261 | -.1856 | -.0525 | .0287 | .4639 |
| | 115.00 | .3889 | -.3699 | -.0467 | .1708 | .5088 |
| | 118.00 | .3599 | -.4862 | -.0417 | .2603 | .5461 |
| | 120.00 | .3226 | -.5504 | -.0564 | .3154 | .5546 |
| | 125.00 | .2649 | -.7797 | -.0457 | .4868 | .6642 |
| | 130.00 | .2055 | -1.0010 | -.0359 | .6347 | .8008 |
| | 135.00 | .1571 | -1.1954 | -.0245 | .7342 | .9564 |
| | 140.00 | .1061 | -1.3659 | -.0140 | .7967 | 1.1145 |
| | 145.00 | .0686 | -1.4906 | -.0056 | .7988 | 1.2603 |
| | 150.00 | .0460 | -1.5816 | -.0007 | .7510 | 1.3927 |
| | 155.00 | .0264 | -1.6485 | -.0007 | .6728 | 1.5053 |
| | 160.00 | .0091 | -1.7053 | -.0020 | .5746 | 1.6056 |
| 2122 | 61.00 | .6295 | .5203 | -.0699 | -.1499 | .8028 |
| | 65.00 | .6368 | .4698 | -.0687 | -.1567 | .7756 |
| | 70.00 | .6269 | .4086 | -.0670 | -.1696 | .7288 |
| | 75.00 | .6136 | .3493 | -.0643 | -.1786 | .6831 |
| | 80.00 | .5964 | .2947 | -.0601 | -.1866 | .6385 |
| | 85.00 | .5806 | .2333 | -.0549 | -.1818 | .5987 |
| | 90.00 | .5646 | .1663 | -.0481 | -.1663 | .5646 |
| | 95.00 | .5474 | .0925 | -.0396 | -.1398 | .5372 |
| | 100.00 | .5324 | .0036 | -.0276 | -.0960 | .5237 |
| | 103.00 | .5234 | -.0563 | -.0198 | -.0628 | .5227 |
| | 77.00 | .6069 | .3257 | -.0629 | -.1809 | .6646 |
| | 80.00 | .5961 | .2893 | -.0607 | -.1814 | .6372 |
| | 85.00 | .5793 | .2269 | -.0551 | -.1755 | .5969 |
| | 90.00 | .5624 | .1659 | -.0482 | -.1659 | .5624 |
| | 95.00 | .5438 | .0928 | -.0396 | -.1398 | .5336 |
| | 100.00 | .5266 | .0063 | -.0277 | -.0976 | .5175 |
| | 105.00 | .5097 | -.1000 | -.0134 | -.0353 | .5182 |
| | 110.00 | .4906 | -.2257 | .0027 | .0443 | .5382 |
| | 115.00 | .4562 | -.3549 | .0185 | .1288 | .5635 |
| | 118.00 | .4251 | -.4439 | .0278 | .1923 | .5837 |
| | 120.00 | .3924 | -.4761 | .0156 | .2161 | .5779 |
| | 125.00 | .3313 | -.6388 | .0256 | .3333 | .6378 |
| | 130.00 | .2748 | -.7813 | .0345 | .4219 | .7127 |
| | 135.00 | .2235 | -.9235 | .0387 | .4950 | .8110 |
| | 140.00 | .1789 | -1.0577 | .0407 | .5429 | .9252 |
| | 145.00 | .1409 | -1.1873 | .0385 | .5656 | 1.0534 |
| | 150.00 | .1107 | -1.3057 | .0325 | .5570 | 1.1862 |
| | 155.00 | .0816 | -1.4100 | .0246 | .5219 | 1.3124 |
| | 160.00 | .0523 | -1.4944 | .0146 | .4620 | 1.4222 |
| 2123 | 61.00 | .6333 | .5229 | -.0700 | -.1503 | .8074 |
| | 65.00 | .6361 | .4744 | -.0698 | -.1612 | .7770 |
| | 70.00 | .6291 | .4154 | -.0715 | -.1751 | .7333 |
| | 75.00 | .6200 | .3563 | -.0743 | -.1837 | .6911 |
| | 80.00 | .6004 | .3016 | -.0771 | -.1927 | .6437 |
| | 85.00 | .5821 | .2426 | -.0795 | -.1910 | .6010 |
| | 90.00 | .5608 | .1860 | -.0805 | -.1860 | .5608 |
| | 95.00 | .5381 | .1259 | -.0816 | -.1723 | .5251 |
| | 100.00 | .5194 | .0416 | -.0918 | -.1312 | .5043 |
| | 103.00 | .5158 | -.0457 | -.1070 | -.0715 | .5129 |
| | 77.00 | .6107 | .3293 | -.0754 | -.1835 | .6691 |
| | 80.00 | .5994 | .2964 | -.0770 | -.1878 | .6418 |
| | 85.00 | .5802 | .2379 | -.0791 | -.1864 | .5987 |
| | 90.00 | .5583 | .1795 | -.0800 | -.1795 | .5583 |
| | 95.00 | .5327 | .1246 | -.0807 | -.1705 | .5198 |
| | 100.00 | .5133 | .0457 | -.0888 | -.1341 | .4976 |
| | 105.00 | .5060 | -.1065 | -.1161 | -.0281 | .5164 |
| | 110.00 | .5114 | -.3370 | -.1577 | .1418 | .5959 |
| | 115.00 | .4895 | -.5576 | -.1743 | .2985 | .6793 |
| | 118.00 | .4899 | -.7538 | -.2067 | .4356 | .7865 |
| | 120.00 | .4523 | -.8329 | -.2159 | .4951 | .8082 |
| | 125.00 | .3926 | -1.0908 | -.2002 | .6683 | .9473 |
| | 130.00 | .3144 | -1.2947 | -.1639 | .7897 | 1.0730 |
| | 135.00 | .2302 | -1.4746 | -.1239 | .8799 | 1.2055 |
| | 140.00 | .1474 | -1.5857 | -.0637 | .9064 | 1.3094 |
| | 145.00 | .0731 | -1.6262 | -.0097 | .8729 | 1.3740 |
| | 150.00 | .0369 | -1.6660 | .0017 | .8010 | 1.4613 |
| | 155.00 | .0187 | -1.7038 | .0065 | .7032 | 1.5521 |
| | 160.00 | .0015 | -1.7369 | .0059 | .5927 | 1.6326 |
| 3121 | -5.00 | -.0557 | .8740 | .0052 | .0207 | .8756 |
| | -3.00 | -.0268 | .8697 | .0010 | .0187 | .8699 |
| | -1.00 | -.0038 | .8732 | -.0015 | .0114 | .8732 |
| | .00 | .0089 | .8745 | -.0025 | .0089 | .8745 |
| | 1.00 | .0217 | .8679 | -.0049 | .0066 | .8682 |
| | 3.00 | .0532 | .8718 | -.0102 | .0075 | .8734 |
| | 5.00 | .0753 | .8693 | -.0121 | -.0008 | .8726 |
| | 10.00 | .1395 | .8642 | -.0205 | -.0127 | .8753 |
| | 15.00 | .2092 | .8648 | -.0302 | -.0217 | .8894 |
| | 20.00 | .2827 | .8713 | -.0396 | -.0323 | .9155 |
| | 25.00 | .3698 | .8717 | -.0512 | -.0332 | .9463 |

| Configuration | α, deg | $C_N$ | $C_A$ | $C_m$ | $C_L$ | $C_D$ |
|---|---|---|---|---|---|---|
| 3121 | 16.00 | .2163 | .8553 | -.0293 | -.0279 | .8818 |
| | 20.00 | .2754 | .8543 | -.0360 | -.0334 | .8970 |
| | 25.00 | .3598 | .8570 | -.0467 | -.0361 | .9288 |
| | 30.00 | .4369 | .8511 | -.0522 | -.0472 | .9556 |
| | 35.00 | .5112 | .8376 | -.0581 | -.0617 | .9793 |
| | 40.00 | .5681 | .8032 | -.0607 | -.0811 | .9805 |
| | 45.00 | .6100 | .7469 | -.0611 | -.0968 | .9594 |
| | 50.00 | .6267 | .6742 | -.0624 | -.1072 | .9211 |
| | 55.00 | .6417 | .5906 | -.0603 | -.1157 | .8644 |
| | 60.00 | .6523 | .5095 | -.0642 | -.1150 | .8197 |
| | 61.00 | .6574 | .5209 | -.0478 | -.1369 | .8275 |
| | 65.00 | .6577 | .4635 | -.0491 | -.1421 | .7920 |
| | 70.00 | .6355 | .3995 | -.0517 | -.1580 | .7338 |
| | 75.00 | .6340 | .3426 | -.0516 | -.1668 | .7011 |
| | 80.00 | .6251 | .2892 | -.0503 | -.1763 | .6658 |
| | 85.00 | .6108 | .2372 | -.0503 | -.1831 | .6292 |
| | 90.00 | .5912 | .1810 | -.0485 | -.1810 | .5912 |
| | 95.00 | .5727 | .1260 | -.0458 | -.1754 | .5595 |
| | 100.00 | .5519 | .0611 | -.0443 | -.1560 | .5329 |
| | 103.00 | .5327 | -.0074 | -.0443 | -.1126 | .5207 |
| | 77.00 | .6309 | .3180 | -.0516 | -.1679 | .6862 |
| | 80.00 | .6234 | .2836 | -.0515 | -.1710 | .6631 |
| | 85.00 | .6082 | .2322 | -.0506 | -.1783 | .6261 |
| | 90.00 | .5895 | .1803 | -.0485 | -.1808 | .5895 |
| | 95.00 | .5660 | .1282 | -.0456 | -.1770 | .5526 |
| | 100.00 | .5426 | .0626 | -.0440 | -.1558 | .5235 |
| | 105.00 | .5127 | -.0393 | -.0445 | -.0947 | .5054 |
| | 110.00 | .4769 | -.1888 | -.0423 | .0143 | .5127 |
| | 115.00 | .4348 | -.3683 | -.0379 | .1500 | .5498 |
| | 118.00 | .4031 | -.4868 | -.0347 | .2406 | .5844 |
| | 120.00 | .3488 | -.5403 | -.0494 | .2935 | .5723 |
| | 125.00 | .2908 | -.7668 | -.0405 | .4613 | .6780 |
| | 130.00 | .2313 | -.9901 | -.0300 | .6098 | .8136 |
| | 135.00 | .1770 | -1.1876 | -.0177 | .7146 | .9650 |
| | 140.00 | .1236 | -1.3534 | -.0080 | .7753 | 1.1162 |
| | 145.00 | .0804 | -1.4765 | .0023 | .7810 | 1.2556 |
| | 150.00 | .0530 | -1.5705 | .0018 | .7394 | 1.3866 |
| | 155.00 | .0359 | -1.6395 | .0026 | .6604 | 1.5011 |
| | 160.00 | .0138 | -1.6954 | .0003 | .5669 | 1.5979 |
| 3122 | 61.00 | .6386 | .5193 | -.0498 | -.1446 | .8103 |
| | 65.00 | .6392 | .4572 | -.0503 | -.1443 | .7725 |
| | 70.00 | .6365 | .3907 | -.0493 | -.1494 | .7317 |
| | 75.00 | .6339 | .3293 | -.0469 | -.1540 | .6975 |
| | 80.00 | .6333 | .2727 | -.0432 | -.1586 | .6711 |
| | 85.00 | .6242 | .2157 | -.0392 | -.1605 | .6406 |
| | 90.00 | .6092 | .1502 | -.0338 | -.1502 | .6092 |
| | 95.00 | .5975 | .0811 | -.0267 | -.1329 | .5881 |
| | 100.00 | .5870 | -.0038 | -.0158 | -.0982 | .5788 |
| | 103.00 | .5791 | -.0623 | -.0080 | -.0696 | .5783 |
| | 77.00 | .6403 | .3041 | -.0458 | -.1523 | .6923 |
| | 80.00 | .6331 | .2705 | -.0442 | -.1565 | .6705 |
| | 85.00 | .6238 | .2141 | -.0397 | -.1589 | .6401 |
| | 90.00 | .6077 | .1527 | -.0346 | -.1527 | .6077 |
| | 95.00 | .5956 | .0823 | -.0267 | -.1339 | .5861 |
| | 100.00 | .5799 | .0012 | -.0164 | -.1019 | .5709 |
| | 105.00 | .5629 | -.1021 | -.0028 | -.0471 | .5701 |
| | 110.00 | .5418 | -.2238 | .0123 | .0250 | .5856 |
| | 115.00 | .5045 | -.3539 | .0277 | .1075 | .6068 |
| | 118.00 | .4720 | -.4400 | .0360 | .1669 | .6234 |
| | 120.00 | .4224 | -.4725 | .0223 | .1980 | .6021 |
| | 125.00 | .3660 | -.6256 | .0364 | .3026 | .6586 |
| | 130.00 | .3040 | -.7767 | .0433 | .3996 | .7322 |
| | 135.00 | .2492 | -.9141 | .0485 | .4702 | .8226 |
| | 140.00 | .1953 | -1.0499 | .0476 | .5253 | .9298 |
| | 145.00 | .1550 | -1.1794 | .0449 | .5495 | 1.0550 |
| | 150.00 | .1237 | -1.2963 | .0380 | .5411 | 1.1845 |
| | 155.00 | .0936 | -1.4059 | .0309 | .5094 | 1.3138 |
| | 160.00 | .0641 | -1.4913 | .0205 | .4499 | 1.4233 |
| 3123 | 61.00 | .6389 | .5219 | -.0501 | -.1467 | .8118 |
| | 65.00 | .6439 | .4643 | -.0510 | -.1487 | .7798 |
| | 70.00 | .6423 | .3946 | -.0539 | -.1511 | .7386 |
| | 75.00 | .6386 | .3342 | -.0575 | -.1575 | .7033 |
| | 80.00 | .6396 | .2803 | -.0601 | -.1649 | .6786 |
| | 85.00 | .6269 | .2230 | -.0637 | -.1676 | .6439 |
| | 90.00 | .6087 | .1670 | -.0662 | -.1670 | .6087 |
| | 95.00 | .5910 | .1077 | -.0689 | -.1588 | .5794 |
| | 100.00 | .5754 | .0319 | -.0788 | -.1313 | .5612 |
| | 103.00 | .5695 | -.0518 | -.0946 | -.0776 | .5666 |
| | 77.00 | .6433 | .3123 | -.0583 | -.1596 | .6971 |
| | 80.00 | .6369 | .2778 | -.0606 | -.1630 | .6754 |
| | 85.00 | .6227 | .2204 | -.0642 | -.1653 | .6395 |
| | 90.00 | .6061 | .1697 | -.0661 | -.1697 | .6061 |
| | 95.00 | .5837 | .1118 | -.0682 | -.1623 | .5718 |
| | 100.00 | .5668 | .0400 | -.0764 | -.1378 | .5513 |
| | 105.00 | .5571 | -.1047 | -.1036 | -.0431 | .5652 |
| | 110.00 | .5606 | -.3364 | -.1469 | .1244 | .6419 |
| | 115.00 | .5377 | -.5605 | -.1684 | .2808 | .7242 |
| | 118.00 | .5353 | -.7488 | -.1980 | .4099 | .8241 |

TABLE I. - AERODYNAMIC CHARACTERISTICS OF MODELS - Continued

$M_\infty = 6.0$

| Configuration | α, deg | $C_N$ | $C_A$ | $C_m$ | $C_L$ | $C_D$ |
|---|---|---|---|---|---|---|
| 3123 | 120.00 | .4336 | -.8322 | -.2104 | .4789 | .8349 |
| | 125.00 | .4229 | -1.0913 | -.1959 | .6513 | .9723 |
| | 130.00 | .3421 | -1.3021 | -.1595 | .7776 | 1.0991 |
| | 135.00 | .2586 | -1.4723 | -.1149 | .8582 | 1.2240 |
| | 140.00 | .1663 | -1.5883 | -.0603 | .8935 | 1.3236 |
| | 145.00 | .0873 | -1.6315 | -.0079 | .8643 | 1.3865 |
| | 150.00 | .0464 | -1.6666 | .0057 | .7931 | 1.4665 |
| | 155.00 | .0293 | -1.7061 | .0101 | .6944 | 1.5587 |
| | 160.00 | .0085 | -1.7441 | .0087 | .5885 | 1.6418 |
| 1221 | -5.00 | -.0745 | .6238 | -.0023 | -.0198 | .6279 |
| | -3.00 | -.0428 | .6246 | -.0016 | -.0100 | .6259 |
| | -1.00 | -.0062 | .6249 | -.0074 | .0047 | .6249 |
| | .00 | .0127 | .6275 | -.0052 | .0127 | .6275 |
| | 1.00 | .0252 | .6268 | -.0042 | .0143 | .6271 |
| | 3.00 | .0666 | .6254 | -.0079 | .0338 | .6280 |
| | 5.00 | .0994 | .6236 | -.0082 | .0446 | .6299 |
| | 10.00 | .1836 | .6221 | -.0120 | .0728 | .6446 |
| | 15.00 | .2735 | .6206 | -.0171 | .1036 | .6703 |
| | 20.00 | .3757 | .6321 | -.0282 | .1368 | .7225 |
| | 25.00 | .4759 | .6340 | -.0389 | .1634 | .7757 |
| | 16.00 | .3001 | .6197 | -.0187 | .1177 | .6784 |
| | 20.00 | .3785 | .6168 | -.0250 | .1447 | .7071 |
| | 25.00 | .4761 | .6176 | -.0332 | .1705 | .7669 |
| | 30.00 | .5743 | .6151 | -.0417 | .1898 | .8199 |
| | 35.00 | .6676 | .6110 | -.0520 | .1964 | .8834 |
| | 40.00 | .7519 | .6028 | -.0623 | .1885 | .9451 |
| | 45.00 | .8167 | .5871 | -.0680 | .1624 | .9926 |
| | 50.00 | .8540 | .5643 | -.0716 | .1166 | 1.0169 |
| | 55.00 | .8704 | .5421 | -.0744 | .0551 | 1.0239 |
| | 60.00 | .8767 | .5104 | -.0774 | -.0036 | 1.0144 |
| | 61.00 | .8842 | .5194 | -.0598 | -.0256 | 1.0251 |
| | 65.00 | .8798 | .4922 | -.0622 | -.0743 | 1.0054 |
| | 70.00 | .8702 | .4526 | -.0667 | -.1277 | .9725 |
| | 75.00 | .8557 | .4059 | -.0708 | -.1706 | .9316 |
| | 80.00 | .8205 | .3658 | -.0736 | -.2177 | .8715 |
| | 85.00 | .7932 | .3184 | -.0742 | -.2481 | .8180 |
| | 90.00 | .7599 | .2633 | -.0747 | -.2633 | .7599 |
| | 95.00 | .7265 | .2055 | -.0736 | -.2680 | .7058 |
| | 100.00 | .6857 | .1343 | -.0726 | -.2514 | .6520 |
| | 103.00 | .6597 | .0734 | -.0727 | -.2199 | .6263 |
| | 76.00 | .8478 | .3953 | -.0612 | -.1785 | .9182 |
| | 80.00 | .8247 | .3547 | -.0648 | -.2061 | .8738 |
| | 85.00 | .7893 | .3080 | -.0685 | -.2380 | .8131 |
| | 90.00 | .7542 | .2520 | -.0724 | -.2520 | .7542 |
| | 95.00 | .7237 | .1907 | -.0721 | -.2531 | .7043 |
| | 100.00 | .6757 | .1200 | -.0729 | -.2355 | .6446 |
| | 105.00 | .6292 | .0081 | -.0735 | -.1706 | .6057 |
| | 110.00 | .5867 | -.1586 | -.0733 | -.0517 | .6055 |
| | 115.00 | .5292 | -.3447 | -.0688 | .0887 | .6253 |
| | 118.00 | .4883 | -.4647 | -.0641 | .1811 | .6493 |
| | 121.00 | .4325 | -.5051 | -.0654 | .2102 | .6308 |
| | 125.00 | .3809 | -.6857 | -.0490 | .3432 | .7053 |
| | 130.00 | .2999 | -.9031 | -.0247 | .4990 | .8102 |
| | 135.00 | .2264 | -1.1128 | -.0115 | .6268 | .9470 |
| | 140.00 | .1661 | -1.2751 | .0054 | .6924 | 1.0836 |
| | 145.00 | .1089 | -1.4009 | .0149 | .7143 | 1.2100 |
| | 150.00 | .0751 | -1.4934 | .0206 | .6817 | 1.3309 |
| | 155.00 | .0551 | -1.5576 | .0231 | .6084 | 1.4350 |
| | 160.00 | .0339 | -1.6106 | .0230 | .5199 | 1.5251 |
| | 163.00 | .0221 | -1.6374 | .0206 | .4576 | 1.5723 |
| | 151.00 | .0662 | -1.5648 | .0181 | .7007 | 1.4007 |
| | 155.00 | .0553 | -1.6146 | .0247 | .6323 | 1.4867 |
| | 160.00 | .0415 | -1.6718 | .0264 | .5328 | 1.5852 |
| | 165.00 | .0133 | -1.7172 | .0173 | .4316 | 1.6621 |
| | 170.00 | .0006 | -1.7347 | .0143 | .3007 | 1.7086 |
| | 175.00 | -.0086 | -1.7539 | .0069 | .1615 | 1.7465 |
| | 177.00 | -.0087 | -1.7590 | .0042 | .1008 | 1.7561 |
| | 179.00 | -.0076 | -1.7636 | .0007 | .0384 | 1.7632 |
| | 180.00 | -.0090 | -1.7636 | -.0029 | .0090 | 1.7636 |
| | 181.00 | -.0027 | -1.7719 | -.0010 | -.0282 | 1.7716 |
| | 183.00 | -.0015 | -1.7703 | -.0038 | -.0912 | 1.7680 |
| | 185.00 | -.0043 | -1.7689 | -.0090 | -.1499 | 1.7626 |
| 1222 | 16.00 | .2855 | .6279 | -.0163 | .1013 | .6823 |
| | 20.00 | .3732 | .6188 | -.0218 | .1391 | .7091 |
| | 25.00 | .4712 | .6229 | -.0301 | .1639 | .7636 |
| | 30.00 | .5752 | .6194 | -.0405 | .1884 | .8240 |
| | 35.00 | .6724 | .6169 | -.0527 | .1970 | .8910 |
| | 40.00 | .7491 | .6027 | -.0577 | .1864 | .9432 |
| | 45.00 | .8110 | .5918 | -.0626 | .1550 | .9920 |
| | 50.00 | .8542 | .5682 | -.0680 | .1138 | 1.0196 |
| | 55.00 | .8733 | .5438 | -.0699 | .0554 | 1.0273 |
| | 60.00 | .8797 | .4969 | -.0721 | .0096 | 1.0103 |
| | 61.00 | .8861 | .5074 | -.0599 | -.0142 | 1.0210 |
| | 65.00 | .8843 | .4782 | -.0622 | -.0597 | 1.0035 |
| | 70.00 | .8726 | .4402 | -.0641 | -.1153 | .9706 |
| | 75.00 | .8640 | .3920 | -.0639 | -.1550 | .9361 |
| | 80.00 | .8261 | .3453 | -.0656 | -.1966 | .8736 |
| | 85.00 | .8029 | .2885 | -.0644 | -.2174 | .8249 |
| | 90.00 | .7747 | .2254 | -.0615 | -.2254 | .7747 |
| | 95.00 | .7449 | .1549 | -.0552 | -.2192 | .7286 |
| | 100.00 | .7178 | .0682 | -.0469 | -.1918 | .6951 |
| | 103.00 | .6992 | .0002 | -.0393 | -.1575 | .6813 |
| 1222 | 76.00 | .8397 | .3869 | -.0653 | -.1723 | .9084 |
| | 80.00 | .8235 | .3411 | -.0658 | -.1929 | .8702 |
| | 85.00 | .7952 | .2864 | -.0649 | -.2160 | .8172 |
| | 90.00 | .7656 | .2250 | -.0609 | -.2250 | .7656 |
| | 95.00 | .7358 | .1461 | -.0552 | -.2096 | .7203 |
| | 100.00 | .7094 | .0549 | -.0465 | -.1773 | .6891 |
| | 105.00 | .6731 | -.0535 | -.0336 | -.1225 | .6640 |
| | 110.00 | .6433 | -.1931 | -.0217 | -.0385 | .6705 |
| | 115.00 | .5924 | -.3292 | -.0091 | .0480 | .6760 |
| | 118.00 | .5582 | -.4169 | .0014 | .1060 | .6886 |
| | 121.00 | .4993 | -.4448 | -.0011 | .1241 | .6571 |
| | 125.00 | .4427 | -.5730 | .0209 | .2155 | .6913 |
| | 130.00 | .3683 | -.7144 | .0393 | .3106 | .7413 |
| | 135.00 | .2968 | -.8556 | .0437 | .3951 | .8149 |
| | 140.00 | .2302 | -.9894 | .0490 | .4597 | .9059 |
| | 145.00 | .1819 | -1.1188 | .0510 | .4927 | 1.0208 |
| | 150.00 | .1503 | -1.2381 | .0500 | .4889 | 1.1474 |
| | 155.00 | .1179 | -1.3319 | .0454 | .4560 | 1.2569 |
| | 160.00 | .0867 | -1.4256 | .0378 | .4061 | 1.3693 |
| | 162.70 | .0695 | -1.4649 | .0331 | .3692 | 1.4193 |
| | 151.00 | .1372 | -1.2969 | .0449 | .5088 | 1.2008 |
| | 155.00 | .1144 | -1.3806 | .0404 | .4798 | 1.2996 |
| | 160.00 | .0857 | -1.4311 | .0349 | .4090 | 1.3741 |
| | 165.00 | .0514 | -1.5471 | .0252 | .3508 | 1.5077 |
| | 170.00 | .0285 | -1.5902 | .0176 | .2480 | 1.5709 |
| | 175.00 | .0053 | -1.6225 | .0081 | .1361 | 1.6168 |
| | 177.00 | .0026 | -1.6261 | .0040 | .0825 | 1.6240 |
| | 179.00 | -.0027 | -1.6453 | -.0015 | .0312 | 1.6351 |
| | 180.00 | -.0041 | -1.6387 | -.0039 | .0041 | 1.6387 |
| | 181.00 | -.0041 | -1.6414 | -.0042 | -.0245 | 1.6413 |
| | 183.00 | -.0043 | -1.6371 | -.0076 | -.0814 | 1.6351 |
| | 185.00 | -.0134 | -1.6387 | -.0132 | -.1295 | 1.6337 |
| 1223 | 16.00 | .2834 | .6236 | -.0131 | .1005 | .6775 |
| | 20.00 | .3738 | .6222 | -.0208 | .1385 | .7125 |
| | 25.00 | .4749 | .6210 | -.0309 | .1680 | .7635 |
| | 30.00 | .5725 | .6191 | -.0402 | .1862 | .8225 |
| | 35.00 | .6697 | .6161 | -.0524 | .1952 | .8838 |
| | 40.00 | .7493 | .6084 | -.0606 | .1829 | .9477 |
| | 45.00 | .8151 | .5907 | -.0668 | .1587 | .9941 |
| | 50.00 | .8582 | .5710 | -.0733 | .1142 | 1.0244 |
| | 55.00 | .8734 | .5499 | -.0745 | .0505 | 1.0308 |
| | 60.00 | .8798 | .5104 | -.0785 | -.0021 | 1.0171 |
| | 61.00 | .8762 | .5154 | -.0554 | -.0260 | 1.0162 |
| | 65.00 | .8750 | .4899 | -.0579 | -.0742 | 1.0000 |
| | 70.00 | .8672 | .4508 | -.0627 | -.1270 | .9691 |
| | 75.00 | .8521 | .3983 | -.0719 | -.1642 | .9262 |
| | 80.00 | .8273 | .3599 | -.0770 | -.2107 | .8772 |
| | 85.00 | .7993 | .3019 | -.0849 | -.2311 | .8226 |
| | 90.00 | .7683 | .2486 | -.0889 | -.2486 | .7680 |
| | 95.00 | .7346 | .1918 | -.0924 | -.2551 | .7151 |
| | 100.00 | .7030 | .1062 | -.1043 | -.2267 | .6739 |
| | 103.00 | .6867 | .0265 | -.1203 | -.1803 | .6631 |
| | 76.00 | .8501 | .3867 | -.0778 | -.1695 | .9185 |
| | 80.00 | .8303 | .3423 | -.0838 | -.1929 | .8771 |
| | 85.00 | .7990 | .2895 | -.0903 | -.2188 | .8212 |
| | 90.00 | .7625 | .2330 | -.0948 | -.2330 | .7625 |
| | 95.00 | .7283 | .1744 | -.0981 | -.2372 | .7103 |
| | 100.00 | .6952 | .0906 | -.1079 | -.2099 | .6689 |
| | 105.00 | .6697 | -.0640 | -.1392 | -.1115 | .6635 |
| | 110.00 | .6642 | -.3061 | -.1860 | .0604 | .7288 |
| | 115.00 | .6242 | -.5331 | -.2056 | .2194 | .7910 |
| | 118.00 | .6115 | -.7336 | -.2371 | .3606 | .8843 |
| | 121.00 | .5657 | -.7975 | -.2413 | .3922 | .8956 |
| | 125.00 | .5068 | -.9951 | -.2184 | .5244 | .9859 |
| | 130.00 | .4089 | -1.2061 | -.1686 | .6611 | 1.0885 |
| | 135.00 | .2852 | -1.3149 | -.0889 | .7281 | 1.1315 |
| | 140.00 | .2032 | -1.4977 | -.0510 | .8070 | 1.2779 |
| | 145.00 | .1148 | -1.5492 | .0060 | .7946 | 1.3348 |
| | 150.00 | .0660 | -1.5892 | .0214 | .7374 | 1.4093 |
| | 155.00 | .0475 | -1.6303 | .0290 | .6460 | 1.4977 |
| | 160.00 | .0262 | -1.6682 | .0293 | .5460 | 1.5766 |
| | 162.70 | .0143 | -1.6826 | .0284 | .4867 | 1.6108 |
| | 151.00 | .0522 | -1.6568 | .0198 | .7575 | 1.4744 |
| | 155.00 | .0349 | -1.6777 | .0244 | .6774 | 1.5352 |
| | 160.00 | .0212 | -1.7223 | .0265 | .5692 | 1.6257 |
| | 165.00 | -.0017 | -1.7562 | .0208 | .4561 | 1.6960 |
| | 170.00 | -.0120 | -1.7680 | .0146 | .3188 | 1.7390 |
| | 175.00 | -.0212 | -1.7940 | .0049 | .1775 | 1.7854 |
| | 177.00 | -.0176 | -1.7970 | .0028 | .1117 | 1.7936 |
| | 179.00 | -.0127 | -1.7969 | -.0015 | .0441 | 1.7964 |
| | 180.00 | -.0090 | -1.8051 | -.0017 | .0090 | 1.8051 |
| | 181.00 | -.0066 | -1.8052 | -.0040 | -.0249 | 1.8050 |
| | 183.00 | -.0055 | -1.7971 | -.0073 | -.0886 | 1.7949 |
| | 185.00 | -.0057 | -1.8002 | -.0110 | -.1512 | 1.7939 |

TABLE I. - AERODYNAMIC CHARACTERISTICS OF MODELS - Continued

$M_\infty = 6.0$

| Configuration | α, deg | $C_N$ | $C_A$ | $C_m$ | $C_L$ | $C_D$ |
|---|---|---|---|---|---|---|
| 2221 | -5.00 | -.0770 | .6262 | .0017 | -.0221 | .6305 |
| | -3.00 | -.0429 | .6249 | .0002 | -.0101 | .6262 |
| | -1.00 | -.0167 | .6224 | .0010 | -.0058 | .6226 |
| | .00 | .0049 | .6234 | -.0018 | .0049 | .6234 |
| | 1.00 | .0187 | .6216 | -.0006 | .0079 | .6218 |
| | 3.00 | .0466 | .6224 | -.0011 | .0139 | .6239 |
| | 5.00 | .0833 | .6254 | -.0036 | .0285 | .6303 |
| | 10.00 | .1646 | .6299 | -.0063 | .0529 | .6480 |
| | 15.00 | .2580 | .6254 | -.0125 | .0873 | .6709 |
| | 20.00 | .3690 | .6475 | -.0227 | .1252 | .7346 |
| | 25.00 | .4818 | .6580 | -.0324 | .1586 | .8000 |
| | 16.00 | .2853 | .6249 | -.0156 | .1020 | .6793 |
| | 20.00 | .3745 | .6337 | -.0220 | .1352 | .7236 |
| | 25.00 | .4843 | .6431 | -.0287 | .1671 | .7875 |
| | 30.00 | .5865 | .6460 | -.0331 | .1849 | .8527 |
| | 35.00 | .6860 | .6500 | -.0395 | .1891 | .9259 |
| | 40.00 | .7675 | .6372 | -.0434 | .1783 | .9814 |
| | 45.00 | .8341 | .6107 | -.0461 | .1580 | 1.0216 |
| | 50.00 | .8801 | .5799 | -.0496 | .1215 | 1.0470 |
| | 55.00 | .9008 | .5415 | -.0515 | .0731 | 1.0485 |
| | 60.00 | .9115 | .4918 | -.0525 | .0299 | 1.0353 |
| | 61.00 | .9196 | .5053 | -.0341 | .0039 | 1.0493 |
| | 65.00 | .9228 | .4754 | -.0358 | -.0409 | 1.0372 |
| | 70.00 | .9147 | .4356 | -.0392 | -.0965 | 1.0085 |
| | 75.00 | .9111 | .3922 | -.0437 | -.1430 | .9816 |
| | 80.00 | .8734 | .3535 | -.0473 | -.1964 | .9215 |
| | 85.00 | .8518 | .3054 | -.0491 | -.2300 | .8752 |
| | 90.00 | .8239 | .2561 | -.0500 | -.2561 | .8239 |
| | 95.00 | .7943 | .2030 | -.0501 | -.2714 | .7736 |
| | 100.00 | .7576 | .1338 | -.0504 | -.2634 | .7229 |
| | 103.00 | .7316 | .0779 | -.0505 | -.2405 | .6953 |
| | 76.00 | .8875 | .3892 | -.0461 | -.1629 | .9553 |
| | 80.00 | .8730 | .3539 | -.0491 | -.1969 | .9212 |
| | 85.00 | .8473 | .3071 | -.0507 | -.2320 | .8709 |
| | 90.00 | .8151 | .2552 | -.0517 | -.2552 | .8151 |
| | 95.00 | .7869 | .1940 | -.0512 | -.2619 | .7670 |
| | 100.00 | .7433 | .1288 | -.0511 | -.2559 | .7096 |
| | 105.00 | .6954 | .0165 | -.0525 | -.1959 | .6674 |
| | 110.00 | .6450 | -.1420 | -.0524 | -.0872 | .6547 |
| | 115.00 | .5824 | -.3315 | -.0492 | .0543 | .6679 |
| | 118.00 | .5394 | -.4506 | -.0473 | .1447 | .6878 |
| | 121.00 | .4913 | -.5084 | -.0425 | .1828 | .6829 |
| | 125.00 | .4215 | -.6821 | -.0294 | .3169 | .7365 |
| | 130.00 | .3418 | -.8954 | -.0157 | .4662 | .8374 |
| | 135.00 | .2621 | -1.1101 | -.0040 | .5997 | .9703 |
| | 140.00 | .1893 | -1.2810 | .0091 | .6784 | 1.1030 |
| | 145.00 | .1304 | -1.4027 | .0205 | .6978 | 1.2238 |
| | 150.00 | .0894 | -1.5012 | .0236 | .6732 | 1.3448 |
| | 155.00 | .0689 | -1.5681 | .0282 | .6003 | 1.4503 |
| | 160.00 | .0467 | -1.6177 | .0266 | .5094 | 1.5361 |
| | 162.70 | .0343 | -1.6453 | .0261 | .4566 | 1.5811 |
| 2222 | 61.00 | .9147 | .5023 | -.0337 | .0042 | 1.0435 |
| | 65.00 | .9165 | .4716 | -.0355 | -.0401 | 1.0299 |
| | 70.00 | .9133 | .4252 | -.0390 | -.0872 | 1.0036 |
| | 75.00 | .9109 | .3778 | -.0403 | -.1291 | .9777 |
| | 80.00 | .8762 | .3302 | -.0418 | -.1730 | .9202 |
| | 85.00 | .8560 | .2815 | -.0401 | -.2056 | .8792 |
| | 90.00 | .8397 | .2194 | -.0377 | -.2194 | .8397 |
| | 95.00 | .8180 | .1524 | -.0323 | -.2231 | .8016 |
| | 100.00 | .7950 | .0662 | -.0250 | -.2033 | .7714 |
| | 103.00 | .7730 | .0033 | -.0186 | -.1771 | .7525 |
| | 76.00 | .8933 | .3706 | -.0433 | -.1435 | .9565 |
| | 80.00 | .8818 | .3283 | -.0436 | -.1702 | .9254 |
| | 85.00 | .8570 | .2767 | -.0418 | -.2009 | .8778 |
| | 90.00 | .8366 | .2131 | -.0403 | -.2131 | .8366 |
| | 95.00 | .8116 | .1437 | -.0347 | -.2139 | .7960 |
| | 100.00 | .7829 | .0529 | -.0274 | -.1881 | .7618 |
| | 105.00 | .7481 | -.0517 | -.0153 | -.1437 | .7360 |
| | 110.00 | .7074 | -.1818 | -.0016 | -.0711 | .7269 |
| | 115.00 | .6526 | -.3196 | .0105 | .0139 | .7266 |
| | 118.00 | .6101 | -.4138 | .0158 | .0790 | .7330 |
| | 121.00 | .5685 | -.4329 | .0251 | .0783 | .7103 |
| | 125.00 | .4980 | -.5525 | .0420 | .1670 | .7248 |
| | 130.00 | .4069 | -.6993 | .0484 | .2741 | .7612 |
| | 135.00 | .3324 | -.8413 | .0571 | .3599 | .8299 |
| | 140.00 | .2566 | -.9835 | .0573 | .4356 | .9183 |
| | 145.00 | .1987 | -1.1104 | .0562 | .4741 | 1.0236 |
| | 150.00 | .1599 | -1.2282 | .0533 | .4756 | 1.1436 |
| | 155.00 | .1257 | -1.3317 | .0478 | .4489 | 1.2600 |
| | 160.00 | .0913 | -1.4173 | .0395 | .3989 | 1.3630 |
| | 162.70 | .0768 | -1.4552 | .0362 | .3594 | 1.4122 |

| Configuration | α, deg | $C_N$ | $C_A$ | $C_m$ | $C_L$ | $C_D$ |
|---|---|---|---|---|---|---|
| 2223 | 61.00 | .9216 | .5082 | -.0331 | .0023 | 1.0524 |
| | 65.00 | .9229 | .4779 | -.0346 | -.0388 | 1.0475 |
| | 70.00 | .9226 | .4373 | -.0334 | -.0954 | 1.0166 |
| | 75.00 | .9157 | .3948 | -.0456 | -.1443 | .9867 |
| | 80.00 | .8908 | .3433 | -.0551 | -.1834 | .9369 |
| | 85.00 | .8672 | .2973 | -.0621 | -.2206 | .8904 |
| | 90.00 | .8416 | .2432 | -.0683 | -.2432 | .8416 |
| | 95.00 | .8132 | .1862 | -.0735 | -.2564 | .7939 |
| | 100.00 | .7856 | .1093 | -.0845 | -.2459 | .7541 |
| | 103.00 | .7697 | .0296 | -.1008 | -.2019 | .7433 |
| | 76.00 | .8989 | .3840 | -.0504 | -.1551 | .9651 |
| | 80.00 | .8819 | .3413 | -.0576 | -.1830 | .9278 |
| | 85.00 | .8642 | .2886 | -.0670 | -.2122 | .8861 |
| | 90.00 | .8347 | .2368 | -.0716 | -.2368 | .8347 |
| | 95.00 | .8033 | .1812 | -.0754 | -.2505 | .7844 |
| | 100.00 | .7688 | .0986 | -.0877 | -.2306 | .7400 |
| | 105.00 | .7430 | -.0545 | -.1183 | -.1397 | .7318 |
| | 110.00 | .7270 | -.2905 | -.1657 | .0244 | .7826 |
| | 115.00 | .6859 | -.5339 | -.1915 | .1940 | .8472 |
| | 118.00 | .6694 | -.7279 | -.2232 | .3284 | .9327 |
| | 121.00 | .6258 | -.7911 | -.2146 | .3558 | .9438 |
| | 125.00 | .5544 | -.9851 | -.1957 | .4889 | 1.0191 |
| | 130.00 | .4510 | -1.1998 | -.1609 | .6299 | 1.1167 |
| | 135.00 | .3250 | -1.3121 | -.0817 | .6980 | 1.1576 |
| | 140.00 | .2231 | -1.4960 | -.0460 | .7830 | 1.2958 |
| | 145.00 | .1355 | -1.5497 | .0094 | .7779 | 1.3471 |
| | 150.00 | .0784 | -1.5864 | .0243 | .7253 | 1.4131 |
| | 155.00 | .0553 | -1.6285 | .0309 | .6381 | 1.4993 |
| | 160.00 | .0354 | -1.6634 | .0322 | .5356 | 1.5752 |
| | 162.70 | .0237 | -1.6811 | .0308 | .4773 | 1.6120 |
| 3221 | -5.00 | -.0695 | .6419 | -.0001 | -.0133 | .6456 |
| | -3.00 | -.0374 | .6412 | -.0006 | -.0037 | .6423 |
| | -1.00 | -.0076 | .6371 | -.0025 | .0035 | .6371 |
| | .00 | .0063 | .6370 | -.0024 | .0063 | .6370 |
| | 1.00 | .0190 | .6374 | -.0018 | .0079 | .6376 |
| | 3.00 | .0514 | .6333 | -.0034 | .0182 | .6351 |
| | 5.00 | .0866 | .6396 | -.0062 | .0306 | .6447 |
| | 10.00 | .1673 | .6437 | -.0100 | .0530 | .6630 |
| | 15.00 | .2590 | .6520 | -.0145 | .0814 | .6968 |
| | 20.00 | .3760 | .6766 | -.0239 | .1219 | .7644 |
| | 25.00 | .4926 | .6869 | -.0311 | .1561 | .8307 |
| | 16.00 | .2831 | .6488 | -.0161 | .0933 | .7017 |
| | 20.00 | .3739 | .6609 | -.0217 | .1254 | .7489 |
| | 25.00 | .4880 | .6774 | -.0261 | .1560 | .8201 |
| | 30.00 | .5913 | .6868 | -.0272 | .1687 | .8905 |
| | 35.00 | .6955 | .6894 | -.0331 | .1743 | .9636 |
| | 40.00 | .7772 | .6781 | -.0345 | .1595 | 1.0191 |
| | 45.00 | .8493 | .6483 | -.0378 | .1421 | 1.0589 |
| | 50.00 | .8938 | .6050 | -.0384 | .1110 | 1.0736 |
| | 55.00 | .9176 | .5535 | -.0390 | .0729 | 1.0692 |
| | 60.00 | .9323 | .4982 | -.0415 | .0347 | 1.0565 |
| | 61.00 | .9339 | .5107 | -.0187 | .0346 | 1.0618 |
| | 65.00 | .9370 | .4668 | -.0223 | -.0271 | 1.0465 |
| | 70.00 | .9353 | .4267 | -.0251 | -.0811 | 1.0248 |
| | 75.00 | .9270 | .3796 | -.0302 | -.1268 | .9936 |
| | 80.00 | .9025 | .3435 | -.0349 | -.1816 | .9484 |
| | 85.00 | .8339 | .2974 | -.0363 | -.2195 | .9035 |
| | 90.00 | .8593 | .2512 | -.0366 | -.2512 | .8593 |
| | 95.00 | .8326 | .1977 | -.0367 | -.2695 | .8122 |
| | 100.00 | .7957 | .1311 | -.0355 | -.2673 | .7608 |
| | 103.00 | .7659 | .0687 | -.0372 | -.2392 | .7308 |
| | 76.00 | .9209 | .3749 | -.0315 | -.1410 | .9842 |
| | 80.00 | .9027 | .3409 | -.0347 | -.1788 | .9484 |
| | 85.00 | .8836 | .2937 | -.0381 | -.2156 | .9058 |
| | 90.00 | .8624 | .2444 | -.0374 | -.2444 | .8624 |
| | 95.00 | .8292 | .1850 | -.0374 | -.2566 | .8099 |
| | 100.00 | .7880 | .1252 | -.0351 | -.2601 | .7543 |
| | 105.00 | .7371 | .0181 | -.0380 | -.2083 | .7073 |
| | 110.00 | .6869 | -.1383 | -.0385 | -.1049 | .6928 |
| | 115.00 | .6149 | -.3280 | -.0358 | .0374 | .6959 |
| | 118.00 | .5735 | -.4476 | -.0348 | .1260 | .7165 |
| | 121.00 | .5173 | -.5017 | -.0295 | .1636 | .7018 |
| | 125.00 | .4511 | -.6764 | -.0163 | .2954 | .7575 |
| | 130.00 | .3649 | -.9009 | -.0061 | .4555 | .8586 |
| | 135.00 | .2850 | -1.1072 | .0057 | .5814 | .9844 |
| | 140.00 | .2115 | -1.2740 | .0195 | .6569 | 1.1119 |
| | 145.00 | .1468 | -1.3953 | .0272 | .6900 | 1.2272 |
| | 150.00 | .1029 | -1.4913 | .0303 | .6566 | 1.3430 |
| | 155.00 | .0779 | -1.5623 | .0317 | .5897 | 1.4488 |
| | 160.00 | .0544 | -1.6148 | .0306 | .5012 | 1.5360 |
| | 162.70 | .0449 | -1.6395 | .0301 | .4446 | 1.5787 |

TABLE I. - AERODYNAMIC CHARACTERISTICS OF MODELS - Continued

$M_\infty = 6.0$

| Configuration | α, deg | $C_N$ | $C_A$ | $C_m$ | $C_L$ | $C_D$ |
|---|---|---|---|---|---|---|
| 3222 | 61.00 | .9327 | .5090 | -.0193 | .0070 | 1.0626 |
| | 65.00 | .9373 | .4680 | -.0214 | -.0281 | 1.0473 |
| | 70.00 | .9338 | .4187 | -.0241 | -.0740 | 1.0207 |
| | 75.00 | .9287 | .3741 | -.0249 | -.1210 | .9939 |
| | 80.00 | .9054 | .3277 | -.0269 | -.1655 | .9485 |
| | 85.00 | .8955 | .2735 | -.0264 | -.1944 | .9159 |
| | 90.00 | .8794 | .2177 | -.0236 | -.2177 | .8794 |
| | 95.00 | .8600 | .1493 | -.0178 | -.2237 | .8437 |
| | 100.00 | .8336 | .0647 | -.0113 | -.2085 | .8097 |
| | 103.00 | .8145 | .0114 | -.0032 | -.1943 | .7910 |
| | 76.00 | .9223 | .3707 | -.0279 | -.1366 | .9846 |
| | 80.00 | .9110 | .3260 | -.0292 | -.1628 | .9538 |
| | 85.00 | .8942 | .2747 | -.0275 | -.1958 | .9147 |
| | 90.00 | .8779 | .2220 | -.0235 | -.2220 | .8779 |
| | 95.00 | .8573 | .1477 | -.0188 | -.2218 | .8411 |
| | 100.00 | .8260 | .0603 | -.0118 | -.2028 | .8030 |
| | 105.00 | .7859 | -.0437 | -.0003 | -.1612 | .7704 |
| | 110.00 | .7439 | -.1782 | .0107 | -.0869 | .7599 |
| | 115.00 | .6898 | -.3150 | .0213 | -.0060 | .7583 |
| | 118.00 | .6437 | -.4039 | .0277 | .0544 | .7580 |
| | 121.00 | .5915 | -.4238 | .0386 | .0587 | .7253 |
| | 125.00 | .5179 | -.5444 | .0484 | .1488 | .7365 |
| | 130.00 | .4284 | -.6994 | .0560 | .2604 | .7778 |
| | 135.00 | .3478 | -.8411 | .0629 | .3489 | .8407 |
| | 140.00 | .2734 | -.9804 | .0642 | .4208 | .9267 |
| | 145.00 | .2079 | -1.1100 | .0593 | .4664 | 1.0285 |
| | 150.00 | .1622 | -1.2358 | .0527 | .4774 | 1.1513 |
| | 155.00 | .1297 | -1.3344 | .0485 | .4464 | 1.2642 |
| | 160.00 | .0993 | -1.4166 | .0415 | .3912 | 1.3652 |
| | 162.70 | .0793 | -1.4679 | .0350 | .3608 | 1.4251 |
| 3223 | 61.00 | .9299 | .5114 | -.0175 | .0035 | 1.0612 |
| | 65.00 | .9374 | .4723 | -.0200 | -.0319 | 1.0492 |
| | 70.00 | .9340 | .4242 | -.0258 | -.0792 | 1.0228 |
| | 75.00 | .9291 | .3831 | -.0325 | -.1295 | .9966 |
| | 80.00 | .9119 | .3383 | -.0404 | -.1748 | .9567 |
| | 85.00 | .8953 | .2852 | -.0491 | -.2061 | .9168 |
| | 90.00 | .8753 | .2354 | -.0537 | -.2354 | .8753 |
| | 95.00 | .8443 | .1840 | -.0572 | -.2569 | .8251 |
| | 100.00 | .8214 | .1081 | -.0691 | -.2491 | .7901 |
| | 103.00 | .8051 | .0355 | -.0844 | -.2157 | .7765 |
| | 76.00 | .9318 | .3727 | -.0386 | -.1362 | .9943 |
| | 80.00 | .9189 | .3333 | -.0454 | -.1686 | .9628 |
| | 85.00 | .9041 | .2813 | -.0529 | -.2014 | .9252 |
| | 90.00 | .8842 | .2298 | -.0583 | -.2298 | .8842 |
| | 95.00 | .8509 | .1710 | -.0629 | -.2446 | .8328 |
| | 100.00 | .8186 | .0978 | -.0733 | -.2384 | .7892 |
| | 105.00 | .7828 | -.0543 | -.1058 | -.1502 | .7702 |
| | 110.00 | .7682 | -.2980 | -.1554 | .0173 | .8238 |
| | 115.00 | .7195 | -.5383 | -.1819 | .1838 | .8796 |
| | 118.00 | .7019 | -.7312 | -.2135 | .3167 | .9630 |
| | 121.00 | .6506 | -.7862 | -.2035 | .3388 | .9626 |
| | 125.00 | .5814 | -.9807 | -.1842 | .4698 | 1.0388 |
| | 130.00 | .4753 | -1.1915 | -.1508 | .6072 | 1.1300 |
| | 135.00 | .3600 | -1.3688 | -.0974 | .7133 | 1.2225 |
| | 140.00 | .2470 | -1.4932 | -.0415 | .7706 | 1.3027 |
| | 145.00 | .1476 | -1.5435 | .0149 | .7644 | 1.3491 |
| | 150.00 | .0930 | -1.5858 | .0304 | .7124 | 1.4198 |
| | 155.00 | .0664 | -1.6290 | .0356 | .6282 | 1.5045 |
| | 160.00 | .0428 | -1.6652 | .0347 | .5293 | 1.5794 |
| | 162.70 | .0335 | -1.6795 | .0347 | .4674 | 1.6135 |
| 1321 | -5.00 | -.0850 | .4334 | -.0047 | -.0469 | .4392 |
| | -3.00 | -.0475 | .4308 | -.0040 | -.0249 | .4327 |
| | -1.00 | -.0262 | .4338 | -.0049 | -.0186 | .4342 |
| | .00 | .0087 | .4320 | -.0031 | .0087 | .4320 |
| | 1.00 | .0236 | .4325 | -.0013 | .0161 | .4328 |
| | 3.00 | .0636 | .4338 | -.0019 | .0408 | .4365 |
| | 5.00 | .1023 | .4359 | -.0029 | .0639 | .4431 |
| | 10.00 | .2051 | .4407 | -.0048 | .1255 | .4696 |
| | 15.00 | .3196 | .4548 | -.0084 | .1910 | .5220 |
| | 20.00 | .4465 | .4777 | -.0157 | .2562 | .6016 |
| | 25.00 | .5824 | .5008 | -.0248 | .3162 | .7000 |
| | 16.00 | .3480 | .4647 | -.0069 | .2064 | .5426 |
| | 20.00 | .4500 | .4840 | -.0114 | .2574 | .6087 |
| | 25.00 | .5808 | .4931 | -.0167 | .3180 | .6924 |
| | 30.00 | .7026 | .5120 | -.0209 | .3525 | .7947 |
| | 35.00 | .8189 | .5239 | -.0269 | .3703 | .8989 |
| | 40.00 | .9209 | .5312 | -.0320 | .3639 | .9988 |
| | 45.00 | 1.0059 | .5322 | -.0369 | .3350 | 1.0876 |
| | 50.00 | 1.0644 | .5342 | -.0387 | .2750 | 1.1588 |
| | 55.00 | 1.0953 | .5234 | -.0379 | .1995 | 1.1974 |
| | 60.00 | 1.1157 | .5088 | -.0413 | .1173 | 1.2206 |
| | 61.00 | 1.1157 | .4992 | -.0194 | .1043 | 1.2178 |
| | 65.00 | 1.1189 | .4824 | -.0241 | .0357 | 1.2180 |
| | 70.00 | 1.1088 | .4630 | -.0290 | -.0559 | 1.2003 |
| | 75.00 | 1.0821 | .4340 | -.0360 | -.1391 | 1.1575 |
| | 80.00 | 1.0636 | .3982 | -.0428 | -.2075 | 1.1165 |
| | 85.00 | 1.0194 | .3539 | -.0507 | -.2637 | 1.0463 |
| | 90.00 | .9975 | .3004 | -.0559 | -.3004 | .9975 |
| | 95.00 | .9516 | .2467 | -.0566 | -.3287 | .9265 |
| | 100.00 | .9039 | .1760 | -.0580 | -.3303 | .8596 |
| | 103.00 | .8623 | .1066 | -.0606 | -.2979 | .8162 |
| 1321 | 76.00 | 1.0636 | .4194 | -.0375 | -.1503 | 1.1306 |
| | 80.00 | 1.0406 | .3854 | -.0448 | -.1988 | 1.0917 |
| | 85.00 | 1.0162 | .3451 | -.0496 | -.2552 | 1.0424 |
| | 90.00 | .9783 | .2977 | -.0524 | -.2977 | .9783 |
| | 95.00 | .9320 | .2393 | -.0550 | -.3196 | .9076 |
| | 100.00 | .8807 | .1754 | -.0552 | -.3256 | .8368 |
| | 105.00 | .8162 | .0627 | -.0590 | -.2718 | .7722 |
| | 110.00 | .7523 | -.0970 | -.0605 | -.1662 | .7401 |
| | 115.00 | .6759 | -.2816 | -.0583 | -.0304 | .7316 |
| | 118.00 | .6229 | -.4073 | -.0570 | .0672 | .7412 |
| | 121.00 | .5365 | -.5089 | -.0627 | .1599 | .7220 |
| | 125.00 | .4643 | -.6941 | -.0465 | .3023 | .7784 |
| | 130.00 | .3686 | -.9425 | -.0337 | .4851 | .8882 |
| | 135.00 | .2701 | -1.1621 | -.0197 | .6307 | 1.0127 |
| | 140.00 | .1799 | -1.3529 | -.0051 | .7318 | 1.1520 |
| | 145.00 | .1043 | -1.5017 | .0051 | .7759 | 1.2899 |
| | 150.00 | .0505 | -1.5980 | .0065 | .7553 | 1.4092 |
| | 155.00 | .0235 | -1.6772 | .0072 | .6875 | 1.5300 |
| | 160.00 | .0032 | -1.7392 | .0064 | .5918 | 1.6354 |
| | 163.00 | -.0170 | -1.7745 | .0031 | .5351 | 1.6920 |
| | 151.00 | .0894 | -1.5672 | .0168 | .6816 | 1.4140 |
| | 155.00 | .0705 | -1.6019 | .0220 | .6131 | 1.4816 |
| | 160.00 | .0516 | -1.6604 | .0231 | .5194 | 1.5779 |
| | 165.00 | .0298 | -1.7111 | .0203 | .4141 | 1.6605 |
| | 170.00 | .0194 | -1.7369 | .0154 | .2923 | 1.7121 |
| | 175.00 | -.0035 | -1.7508 | .0082 | .1561 | 1.7438 |
| | 177.00 | -.0101 | -1.7508 | .0030 | .1017 | 1.7479 |
| | 177.00 | -.0065 | -1.7655 | .0006 | .0373 | 1.7651 |
| | 180.00 | -.0104 | -1.7918 | -.0022 | .0104 | 1.7918 |
| | 181.00 | -.0117 | -1.7671 | -.0038 | -.0191 | 1.7670 |
| | 183.00 | -.0158 | -1.7670 | -.0084 | -.0767 | 1.7654 |
| | 185.00 | -.0185 | -1.7622 | -.0123 | -.1352 | 1.7571 |
| 1322 | 61.00 | 1.1244 | .5000 | -.0188 | .1078 | 1.2258 |
| | 65.00 | 1.1283 | .4833 | -.0229 | .0388 | 1.2269 |
| | 70.00 | 1.1194 | .4548 | -.0281 | -.0445 | 1.2075 |
| | 75.00 | 1.0969 | .4227 | -.0316 | -.1244 | 1.1689 |
| | 80.00 | 1.0754 | .3852 | -.0366 | -.1926 | 1.1260 |
| | 85.00 | 1.0577 | .3349 | -.0415 | -.2414 | 1.0829 |
| | 90.00 | 1.0243 | .2780 | -.0415 | -.2780 | 1.0243 |
| | 95.00 | .9924 | .2013 | -.0406 | -.2870 | .9711 |
| | 100.00 | .9490 | .1182 | -.0356 | -.2812 | .9141 |
| | 103.00 | .9125 | .0494 | -.0307 | -.2534 | .8780 |
| | 76.00 | 1.0647 | .4066 | -.0352 | -.1369 | 1.1315 |
| | 80.00 | 1.0480 | .3749 | -.0377 | -.1872 | 1.0972 |
| | 85.00 | 1.0226 | .3244 | -.0414 | -.2341 | 1.0470 |
| | 90.00 | .9959 | .2701 | -.0410 | -.2701 | .9959 |
| | 95.00 | .9563 | .1943 | -.0399 | -.2770 | .9358 |
| | 100.00 | .9150 | .1116 | -.0344 | -.2688 | .8817 |
| | 105.00 | .8620 | -.0020 | -.0272 | -.2212 | .8331 |
| | 110.00 | .8134 | -.1296 | -.0160 | -.1564 | .8086 |
| | 115.00 | .7423 | -.2776 | -.0059 | -.0621 | .7901 |
| | 118.00 | .6945 | -.3676 | -.0017 | -.0014 | .7858 |
| | 121.00 | .6550 | -.3932 | .0145 | -.0004 | .7639 |
| | 125.00 | .5829 | -.5141 | .0316 | .0868 | .7724 |
| | 130.00 | .4878 | -.6635 | .0441 | .1947 | .8002 |
| | 135.00 | .3887 | -.8158 | .0493 | .3020 | .8518 |
| | 140.00 | .2953 | -.9654 | .0500 | .3943 | .9293 |
| | 145.00 | .2199 | -1.0995 | .0467 | .4506 | 1.0268 |
| | 150.00 | .1730 | -1.2176 | .0439 | .4590 | 1.1410 |
| | 155.00 | .1349 | -1.3214 | .0399 | .4362 | 1.2546 |
| | 160.00 | .1033 | -1.4096 | .0353 | .3850 | 1.3599 |
| | 163.00 | .0901 | -1.4514 | .0333 | .3381 | 1.4143 |
| | 151.00 | .1567 | -1.2943 | .0394 | .4904 | 1.2080 |
| | 155.00 | .1337 | -1.3826 | .0380 | .4631 | 1.3096 |
| | 160.00 | .1023 | -1.4268 | .0338 | .3919 | 1.3757 |
| | 165.00 | .0640 | -1.5449 | .0249 | .3381 | 1.5089 |
| | 170.00 | .0385 | -1.5776 | .0193 | .2361 | 1.5603 |
| | 175.00 | .0130 | -1.6096 | .0106 | .1273 | 1.6046 |
| | 177.00 | .0114 | -1.6228 | .0049 | .0735 | 1.6212 |
| | 179.00 | -.0002 | -1.6202 | .0011 | .0285 | 1.6200 |
| | 180.00 | -.0040 | -1.6175 | -.0002 | .0040 | 1.6175 |
| | 181.00 | -.0092 | -1.6257 | -.0027 | -.0192 | 1.6257 |
| | 183.00 | -.0170 | -1.6257 | -.0056 | -.0681 | 1.6244 |
| | 185.00 | -.0261 | -1.6196 | -.0120 | -.1152 | 1.6157 |
| 1323 | 61.00 | 1.1211 | .5022 | -.0187 | .1043 | 1.2240 |
| | 65.00 | 1.1251 | .4881 | -.0228 | .0331 | 1.2260 |
| | 70.00 | 1.1139 | .4652 | -.0283 | -.0561 | 1.2058 |
| | 75.00 | 1.0941 | .4310 | -.0395 | -.1331 | 1.1684 |
| | 80.00 | 1.0753 | .3920 | -.0516 | -.1993 | 1.1271 |
| | 85.00 | 1.0524 | .3468 | -.0626 | -.2538 | 1.0786 |
| | 90.00 | 1.0176 | .2940 | -.0712 | -.2940 | 1.0176 |
| | 95.00 | .9729 | .2369 | -.0796 | -.3208 | .9486 |
| | 100.00 | .9268 | .1548 | -.0928 | -.3133 | .8858 |
| | 103.00 | .9051 | .0753 | -.1112 | -.2770 | .8650 |

TABLE I. - AERODYNAMIC CHARACTERISTICS OF MODELS - Continued

$M_\infty = 6.0$

| Configuration | α, deg | $C_N$ | $C_A$ | $C_m$ | $C_L$ | $C_D$ |
|---|---|---|---|---|---|---|
| 1323 | 76.00 | 1.0710 | .4219 | -.0406 | -.1503 | 1.1413 |
| | 80.00 | 1.0575 | .3837 | -.0527 | -.1943 | 1.1080 |
| | 85.00 | 1.0279 | .3321 | -.0651 | -.2412 | 1.0529 |
| | 90.00 | .9949 | .2859 | -.0722 | -.2859 | .9949 |
| | 95.00 | .9536 | .2243 | -.0799 | -.3065 | .9305 |
| | 100.00 | .9025 | .1509 | -.0914 | -.3053 | .8626 |
| | 105.00 | .8621 | -.0073 | -.1259 | -.2160 | .8346 |
| | 110.00 | .8342 | -.2392 | -.1763 | -.0605 | .8657 |
| | 115.00 | .7770 | -.4700 | -.2019 | .0976 | .9028 |
| | 118.00 | .7523 | -.6834 | -.2394 | .2502 | .9850 |
| | 121.00 | .7219 | -.7284 | -.2258 | .2526 | .9940 |
| | 125.00 | .6424 | -.9159 | -.2058 | .3818 | 1.0515 |
| | 130.00 | .5263 | -1.1402 | -.1694 | .5351 | 1.1361 |
| | 135.00 | .4010 | -1.3098 | -.1103 | .6426 | 1.2098 |
| | 140.00 | .2833 | -1.4535 | -.0512 | .7173 | 1.2955 |
| | 145.00 | .1720 | -1.5062 | .0110 | .7230 | 1.3325 |
| | 150.00 | .1043 | -1.5565 | .0254 | .6880 | 1.4002 |
| | 155.00 | .0672 | -1.5993 | .0279 | .6150 | 1.4779 |
| | 160.00 | .0496 | -1.6323 | .0323 | .5117 | 1.5509 |
| | 163.00 | .0321 | -1.6572 | .0300 | .4538 | 1.5942 |
| | 151.00 | .0742 | -1.6410 | .0199 | .7307 | 1.4713 |
| | 155.00 | .0531 | -1.6681 | .0258 | .6569 | 1.5342 |
| | 160.00 | .0392 | -1.7041 | .0289 | .5460 | 1.6147 |
| | 165.00 | .0163 | -1.7460 | .0262 | .4362 | 1.6907 |
| | 170.00 | .0007 | -1.7621 | .0184 | .3053 | 1.7354 |
| | 175.00 | -.0111 | -1.7815 | .0101 | .1664 | 1.7737 |
| | 177.00 | -.0165 | -1.7813 | .0035 | .1097 | 1.7780 |
| | 179.00 | -.0154 | -1.8060 | -.0005 | .0469 | 1.8054 |
| | 180.00 | -.0116 | -1.8092 | -.0015 | .0116 | 1.8092 |
| | 181.00 | -.0104 | -1.8092 | -.0030 | -.0212 | 1.8091 |
| | 183.00 | -.0120 | -1.8060 | -.0086 | -.0825 | 1.8041 |
| | 185.00 | -.0121 | -1.8061 | -.0120 | -.1453 | 1.8003 |
| 1324 | 60.00 | 1.0718 | .5013 | -.0136 | .1018 | 1.1789 |
| | 65.00 | 1.0866 | .4698 | -.0190 | .0334 | 1.1833 |
| | 70.00 | 1.0815 | .4408 | -.0224 | -.0443 | 1.1671 |
| | 75.00 | 1.0694 | .4041 | -.0254 | -.1135 | 1.1376 |
| | 80.00 | 1.0711 | .3583 | -.0298 | -.1669 | 1.1170 |
| | 85.00 | 1.0476 | .3164 | -.0309 | -.2239 | 1.0712 |
| | 90.00 | 1.0246 | .2580 | -.0324 | -.2580 | 1.0246 |
| | 95.00 | .9999 | .1794 | -.0309 | -.2659 | .9805 |
| | 100.00 | .9707 | .0920 | -.0234 | -.2592 | .9400 |
| | 80.00 | 1.0957 | .3494 | -.0417 | -.1538 | 1.1398 |
| | 85.00 | 1.0744 | .2951 | -.0451 | -.2004 | 1.0960 |
| | 90.00 | 1.0470 | .2364 | -.0459 | -.2364 | 1.0470 |
| | 95.00 | 1.0166 | .1586 | -.0430 | -.2466 | .9989 |
| | 100.00 | .9844 | .0635 | -.0369 | -.2334 | .9584 |
| | 105.00 | .9410 | -.0442 | -.0270 | -.2008 | .9203 |
| | 110.00 | .8993 | -.1692 | -.0174 | -.1486 | .9030 |
| | 115.00 | .8289 | -.2937 | -.0120 | -.0841 | .8753 |
| | 120.00 | .7601 | -.4107 | -.0057 | -.0244 | .8637 |
| | 120.00 | .7030 | -.3693 | -.0476 | -.0317 | .7935 |
| | 125.00 | .6116 | -.5120 | -.0242 | .0686 | .7947 |
| | 130.00 | .5195 | -.6462 | -.0013 | .1611 | .8134 |
| | 135.00 | .4175 | -.7718 | -.0067 | .2505 | .8409 |
| | 140.00 | .3312 | -.9143 | .0055 | .3340 | .9133 |
| | 145.00 | .2649 | -1.0458 | .0164 | .3828 | 1.0086 |
| | 150.00 | .2165 | -1.1727 | .0250 | .3989 | 1.1239 |
| | 155.00 | .1781 | -1.3076 | .0251 | .3912 | 1.2604 |
| | 160.00 | .1321 | -1.4291 | .0161 | .3647 | 1.3881 |
| | 150.00 | .2376 | -1.1458 | .0351 | .3671 | 1.1111 |
| | 155.00 | .1930 | -1.2612 | .0323 | .3581 | 1.2246 |
| | 160.00 | .1499 | -1.3766 | .0270 | .3299 | 1.3449 |
| | 165.00 | .1133 | -1.4814 | .0220 | .2740 | 1.4602 |
| | 170.00 | .0809 | -1.5447 | .0200 | .1885 | 1.5352 |
| | 175.00 | .0591 | -1.5754 | .0146 | .0784 | 1.5746 |
| | 177.00 | .0538 | -1.5832 | .0125 | .0292 | 1.5838 |
| | 179.00 | .0439 | -1.5896 | .0099 | -.0162 | 1.5902 |
| | 180.00 | .0418 | -1.5919 | .0107 | -.0418 | 1.5919 |
| | 181.00 | .0309 | -1.5902 | .0075 | -.0586 | 1.5895 |
| | 183.00 | .0256 | -1.5915 | .0064 | -.1089 | 1.5880 |
| | 185.00 | .0222 | -1.5830 | .0039 | -.1601 | 1.5751 |
| 1325 | 60.00 | 1.0577 | .5178 | -.0196 | .0805 | 1.1749 |
| | 65.00 | 1.0701 | .4881 | -.0249 | .0098 | 1.1761 |
| | 70.00 | 1.0683 | .4584 | -.0267 | -.0654 | 1.1607 |
| | 75.00 | 1.0578 | .4190 | -.0305 | -.1309 | 1.1302 |
| | 80.00 | 1.0570 | .3669 | -.0330 | -.1778 | 1.1046 |
| | 85.00 | 1.0447 | .3218 | -.0347 | -.2295 | 1.0687 |
| | 90.00 | 1.0269 | .2558 | -.0349 | -.2558 | 1.0269 |
| | 95.00 | 1.0090 | .1783 | -.0314 | -.2655 | .9897 |
| | 100.00 | .9829 | .0903 | -.0273 | -.2596 | .9523 |
| | 80.00 | 1.1287 | .3367 | -.0404 | -.1356 | 1.1701 |
| | 85.00 | 1.1139 | .2800 | -.0443 | -.1818 | 1.1341 |
| | 90.00 | 1.0961 | .2111 | -.0460 | -.2111 | 1.0961 |
| | 95.00 | 1.0703 | .1308 | -.0431 | -.2236 | 1.0548 |
| | 100.00 | 1.0478 | .0427 | -.0377 | -.2241 | 1.0245 |
| | 105.00 | .9963 | -.0564 | -.0317 | -.2034 | .9770 |
| | 110.00 | .9481 | -.1613 | -.0238 | -.1727 | .9461 |
| | 115.00 | .8727 | -.2731 | -.0148 | -.1213 | .9063 |
| | 120.00 | .7862 | -.3895 | -.0046 | -.0558 | .8757 |
| 1325 | 120.00 | .7132 | -.3158 | -.0523 | -.0831 | .7755 |
| | 125.00 | .6184 | -.4645 | -.0322 | .0258 | .7730 |
| | 130.00 | .5396 | -.6109 | -.0058 | .1212 | .8061 |
| | 135.00 | .4363 | -.7389 | -.0106 | .2140 | .8310 |
| | 140.00 | .3574 | -.8812 | .0078 | .2926 | .9047 |
| | 145.00 | .2969 | -1.0046 | .0160 | .3330 | .9932 |
| | 150.00 | .2575 | -1.1088 | .0329 | .3314 | 1.0890 |
| | 155.00 | .2240 | -1.2146 | .0332 | .3103 | 1.1955 |
| | 160.00 | .1809 | -1.2998 | .0275 | .2746 | 1.2833 |
| | 150.00 | .2609 | -1.0845 | .0327 | .3164 | 1.0697 |
| | 155.00 | .2215 | -1.1729 | .0332 | .2950 | 1.1566 |
| | 160.00 | .1803 | -1.2547 | .0311 | .2597 | 1.2407 |
| | 165.00 | .1414 | -1.3255 | .0261 | .2065 | 1.3169 |
| | 170.00 | .1018 | -1.3793 | .0205 | .1392 | 1.3760 |
| | 175.00 | .0705 | -1.4149 | .0152 | .0531 | 1.4156 |
| | 177.00 | .0555 | -1.4247 | .0124 | .0192 | 1.4256 |
| | 179.00 | .0393 | -1.4304 | .0071 | -.0143 | 1.4309 |
| | 180.00 | .0327 | -1.4313 | .0081 | -.0327 | 1.4313 |
| | 181.00 | .0241 | -1.4330 | .0046 | -.0491 | 1.4324 |
| | 183.00 | .0100 | -1.4292 | .0028 | -.0848 | 1.4267 |
| | 185.00 | -.0052 | -1.4213 | -.0004 | -.1187 | 1.4164 |
| 1326 | 60.00 | 1.0967 | .4688 | -.0262 | .1424 | 1.1842 |
| | 65.00 | 1.1230 | .4375 | -.0311 | .0781 | 1.2027 |
| | 70.00 | 1.1256 | .3987 | -.0359 | .0103 | 1.1941 |
| | 75.00 | 1.1293 | .3488 | -.0419 | -.0446 | 1.1811 |
| | 80.00 | 1.1444 | .2843 | -.0505 | -.0813 | 1.1764 |
| | 85.00 | 1.1429 | .2182 | -.0577 | -.1178 | 1.1576 |
| | 90.00 | 1.1452 | .1357 | -.0638 | -.1357 | 1.1452 |
| | 95.00 | 1.1471 | .0451 | -.0708 | -.1449 | 1.1388 |
| | 100.00 | 1.1375 | -.0444 | -.0730 | -.1538 | 1.1279 |
| | 80.00 | 1.1776 | .2913 | -.0503 | -.0824 | 1.2103 |
| | 85.00 | 1.1846 | .2111 | -.0609 | -.1071 | 1.1985 |
| | 90.00 | 1.1921 | .1246 | -.0682 | -.1246 | 1.1921 |
| | 95.00 | 1.1944 | .0335 | -.0726 | -.1375 | 1.1870 |
| | 100.00 | 1.1794 | -.0538 | -.0748 | -.1518 | 1.1708 |
| | 105.00 | 1.1430 | -.1448 | -.0762 | -.1559 | 1.1416 |
| | 110.00 | 1.0902 | -.2305 | -.0739 | -.1563 | 1.1033 |
| | 115.00 | 1.0298 | -.2978 | -.0709 | -.1653 | 1.0592 |
| | 120.00 | .9249 | -.3967 | -.0618 | -.1189 | .9994 |
| | 120.00 | .8693 | -.3504 | -.1198 | -.1312 | .9280 |
| | 125.00 | .7735 | -.4560 | -.1036 | -.0702 | .8952 |
| | 130.00 | .6897 | -.5548 | -.0859 | -.0183 | .8849 |
| | 135.00 | .5992 | -.6408 | -.0737 | .0294 | .8768 |
| | 140.00 | .5177 | -.7417 | -.0658 | .0802 | .9010 |
| | 145.00 | .4636 | -.8158 | -.0579 | .0881 | .9342 |
| | 150.00 | .4173 | -.9009 | -.0388 | .0891 | .9889 |
| | 155.00 | .3623 | -.9876 | -.0312 | .0890 | 1.0482 |
| | 160.00 | .2973 | -1.0867 | -.0287 | .0923 | 1.1229 |
| | 150.00 | .3970 | -.8687 | -.0426 | .0906 | .9508 |
| | 155.00 | .3415 | -.9486 | -.0360 | .0914 | 1.0040 |
| | 160.00 | .2747 | -1.0443 | -.0293 | .0991 | 1.0753 |
| | 165.00 | .2086 | -1.1423 | -.0245 | .0942 | 1.1574 |
| | 170.00 | .1452 | -1.2244 | -.0179 | .0696 | 1.2310 |
| | 175.00 | .0846 | -1.2837 | -.0080 | .0276 | 1.2862 |
| | 177.00 | .0554 | -1.2935 | -.0047 | .0124 | 1.2946 |
| | 179.00 | .0294 | -1.3018 | -.0021 | -.0067 | 1.3021 |
| | 180.00 | .0142 | -1.3004 | -.0017 | -.0142 | 1.3004 |
| | 181.00 | .0022 | -1.3014 | -.0002 | -.0249 | 1.3012 |
| | 183.00 | -.0335 | -1.3024 | .0002 | -.0347 | 1.3024 |
| | 185.00 | -.0574 | -1.2919 | .0039 | -.0554 | 1.2920 |
| 2321 | -5.00 | -.0746 | .4394 | -.0080 | -.0360 | .4442 |
| | -3.00 | -.0437 | .4350 | -.0051 | -.0208 | .4367 |
| | -1.00 | -.0049 | .4354 | -.0062 | .0027 | .4354 |
| | .00 | .0100 | .4346 | -.0041 | .0100 | .4346 |
| | 1.00 | .0262 | .4336 | -.0033 | .0186 | .4340 |
| | 3.00 | .0623 | .4325 | -.0035 | .0396 | .4352 |
| | 5.00 | .0970 | .4347 | -.0028 | .0587 | .4415 |
| | 10.00 | .1973 | .4466 | -.0042 | .1167 | .4741 |
| | 15.00 | .3230 | .4687 | -.0109 | .1907 | .5363 |
| | 20.00 | .4600 | .5051 | -.0165 | .2595 | .6319 |
| | 25.00 | .5978 | .5282 | -.0211 | .3186 | .7313 |
| | 16.00 | .3492 | .4777 | -.0071 | .2040 | .5555 |
| | 20.00 | .4598 | .4997 | -.0119 | .2612 | .6269 |
| | 25.00 | .5896 | .5205 | -.0110 | .3144 | .7209 |
| | 30.00 | .7156 | .5385 | -.0143 | .3504 | .8242 |
| | 35.00 | .8345 | .5530 | -.0181 | .3664 | .9317 |
| | 40.00 | .9352 | .5526 | -.0183 | .3612 | 1.0244 |
| | 45.00 | 1.0291 | .5529 | -.0241 | .3367 | 1.1187 |
| | 50.00 | 1.0842 | .5400 | -.0216 | .2832 | 1.1776 |
| | 55.00 | 1.1196 | .5263 | -.0215 | .2111 | 1.2190 |
| | 60.00 | 1.1452 | .4987 | -.0235 | .1405 | 1.2413 |
| | 61.00 | 1.1333 | .5044 | -.0003 | .1082 | 1.2357 |
| | 65.00 | 1.1432 | .4899 | -.0024 | .0391 | 1.2431 |
| | 70.00 | 1.1354 | .4671 | -.0074 | -.0506 | 1.2267 |
| | 75.00 | 1.1106 | .4408 | -.0135 | -.1384 | 1.1869 |
| | 80.00 | 1.0972 | .4072 | -.0212 | -.2105 | 1.1512 |
| | 85.00 | 1.0696 | .3641 | -.0264 | -.2695 | 1.0972 |
| | 90.00 | 1.0418 | .3194 | -.0292 | -.3194 | 1.0418 |
| | 95.00 | .9940 | .2646 | -.0322 | -.3502 | .9671 |
| | 100.00 | .9315 | .1919 | -.0344 | -.3508 | .8841 |
| | 103.00 | .8871 | .1097 | -.0375 | -.3065 | .8397 |

TABLE I. - AERODYNAMIC CHARACTERISTICS OF MODELS - Continued

$M_\infty = 6.0$

| Configuration | α, deg | $C_N$ | $C_A$ | $C_m$ | $C_L$ | $C_D$ |
|---|---|---|---|---|---|---|
| 2321 | 76.00 | 1.1071 | .4221 | -.0173 | -.1418 | 1.1763 |
| | 80.00 | 1.0901 | .3894 | -.0253 | -.1942 | 1.1411 |
| | 85.00 | 1.0647 | .3526 | -.0279 | -.2585 | 1.0914 |
| | 90.00 | 1.0321 | .3028 | -.0311 | -.3028 | 1.0321 |
| | 95.00 | .9812 | .2463 | -.0333 | -.3309 | .9560 |
| | 100.00 | .9270 | .1784 | -.0336 | -.3367 | .8819 |
| | 105.00 | .8612 | .0682 | -.0391 | -.2888 | .8142 |
| | 110.00 | .7947 | -.0915 | -.0416 | -.1858 | .7781 |
| | 115.00 | .7121 | -.2778 | -.0414 | -.0491 | .7628 |
| | 118.00 | .6574 | -.3993 | -.0389 | .0440 | .7680 |
| | 120.00 | .6237 | -.3986 | -.0602 | .0333 | .7394 |
| | 125.00 | .5212 | -.6451 | -.0415 | .2295 | .7969 |
| | 130.00 | .4630 | -.8943 | -.0461 | .3875 | .9295 |
| | 135.00 | .3378 | -1.1160 | -.0237 | .5502 | 1.0280 |
| | 140.00 | .2685 | -1.3114 | -.0049 | .6373 | 1.1772 |
| | 145.00 | .1821 | -1.4541 | .0001 | .6848 | 1.2955 |
| | 150.00 | .1142 | -1.5655 | .0070 | .6839 | 1.4129 |
| | 155.00 | .0845 | -1.6441 | .0137 | .6182 | 1.5258 |
| | 160.00 | .0611 | -1.7036 | .0147 | .5253 | 1.6218 |
| 2322 | 61.00 | 1.1493 | .4976 | .0001 | .1220 | 1.2464 |
| | 65.00 | 1.1504 | .4762 | -.0029 | .0546 | 1.2439 |
| | 70.00 | 1.1411 | .4468 | -.0085 | -.0296 | 1.2251 |
| | 75.00 | 1.1243 | .4174 | -.0117 | -.1122 | 1.1940 |
| | 80.00 | 1.1076 | .3792 | -.0153 | -.1811 | 1.1566 |
| | 85.00 | 1.0896 | .3351 | -.0182 | -.2388 | 1.1147 |
| | 90.00 | 1.0664 | .2795 | -.0186 | -.2795 | 1.0664 |
| | 95.00 | 1.0215 | .2139 | -.0160 | -.3021 | .9990 |
| | 100.00 | .9864 | .1104 | -.0106 | -.2800 | .9522 |
| | 103.00 | .9483 | .0454 | -.0056 | -.2575 | .9138 |
| | 76.00 | 1.1193 | .4020 | -.0154 | -.1193 | 1.1834 |
| | 80.00 | 1.1053 | .3682 | -.0189 | -.1707 | 1.1524 |
| | 85.00 | 1.0820 | .3253 | -.0196 | -.2298 | 1.1063 |
| | 90.00 | 1.0575 | .2665 | -.0220 | -.2665 | 1.0575 |
| | 95.00 | 1.0182 | .1987 | -.0176 | -.2866 | .9970 |
| | 100.00 | .9707 | .1117 | -.0127 | -.2786 | .9366 |
| | 105.00 | .9142 | .0028 | -.0043 | -.2393 | .8824 |
| | 110.00 | .8624 | -.1367 | .0025 | -.1665 | .8572 |
| | 115.00 | .7881 | -.2807 | .0108 | -.0787 | .8329 |
| | 118.00 | .7370 | -.3629 | .0174 | -.0256 | .8211 |
| | 120.00 | .7024 | -.3333 | .0014 | -.0626 | .7750 |
| | 125.00 | .6226 | -.5042 | .0342 | .0559 | .7992 |
| | 130.00 | .5040 | -.6731 | .0150 | .1916 | .8188 |
| | 135.00 | .4022 | -.8384 | .0325 | .3084 | .8772 |
| | 140.00 | .3283 | -1.0031 | .0241 | .3933 | .9794 |
| | 145.00 | .2417 | -1.1483 | .0388 | .4606 | 1.0792 |
| | 150.00 | .1928 | -1.2825 | .0348 | .4743 | 1.2071 |
| | 155.00 | .1489 | -1.3904 | .0305 | .4527 | 1.3230 |
| | 160.00 | .1174 | -1.4901 | .0274 | .3993 | 1.4404 |
| 2323 | 61.00 | 1.1522 | .4963 | -.0017 | .1245 | 1.2483 |
| | 65.00 | 1.1605 | .4818 | -.0035 | .0538 | 1.2554 |
| | 75.00 | 1.1302 | .4296 | -.0183 | -.1225 | 1.2029 |
| | 80.00 | 1.1206 | .3937 | -.0295 | -.1931 | 1.1720 |
| | 85.00 | 1.1003 | .3429 | -.0428 | -.2457 | 1.1260 |
| | 90.00 | 1.0719 | .2972 | -.0493 | -.2972 | 1.0719 |
| | 95.00 | 1.0163 | .2445 | -.0573 | -.3322 | .9911 |
| | 100.00 | .9802 | .1566 | -.0727 | -.3244 | .9381 |
| | 103.00 | .9535 | .0706 | -.0926 | -.2833 | .9132 |
| | 76.00 | 1.1188 | .4188 | -.0221 | -.1357 | 1.1869 |
| | 80.00 | 1.1053 | .3821 | -.0328 | -.1844 | 1.1549 |
| | 85.00 | 1.0829 | .3332 | -.0445 | -.2375 | 1.1078 |
| | 90.00 | 1.0484 | .2821 | -.0525 | -.2821 | 1.0484 |
| | 95.00 | 1.0073 | .2259 | -.0587 | -.3128 | .9838 |
| | 100.00 | .9530 | .1543 | -.0704 | -.3175 | .9117 |
| | 105.00 | .9095 | -.0012 | -.1058 | -.2342 | .8788 |
| | 110.00 | .8765 | -.2430 | -.1596 | -.0715 | .9067 |
| | 115.00 | .8146 | -.4712 | -.1849 | .0828 | .9374 |
| | 118.00 | .7852 | -.6751 | -.2230 | .2275 | 1.0102 |
| | 120.00 | .7658 | -.6877 | -.2450 | .2127 | 1.0071 |
| | 125.00 | .6512 | -.9651 | -.2278 | .4171 | 1.0870 |
| | 130.00 | .5687 | -1.2028 | -.1932 | .5558 | 1.2087 |
| | 135.00 | .4189 | -1.3876 | -.1349 | .6850 | 1.2774 |
| | 140.00 | .3142 | -1.5391 | -.0700 | .7486 | 1.3810 |
| | 145.00 | .1991 | -1.5937 | -.0074 | .7510 | 1.4197 |
| | 150.00 | .1179 | -1.6486 | .0144 | .7222 | 1.4867 |
| | 155.00 | .0825 | -1.7017 | .0221 | .6444 | 1.5772 |
| | 160.00 | .0583 | -1.7444 | .0262 | .5418 | 1.6591 |
| 3321 | -5.00 | -.0697 | .4441 | -.0067 | -.0307 | .4485 |
| | -3.00 | -.0370 | .4418 | -.0066 | -.0138 | .4431 |
| | -1.00 | -.0036 | .4393 | -.0052 | .0041 | .4393 |
| | .00 | .0125 | .4404 | -.0048 | .0125 | .4404 |
| | 1.00 | .0273 | .4411 | -.0035 | .0196 | .4415 |
| | 3.00 | .0622 | .4407 | -.0050 | .0390 | .4434 |
| | 5.00 | .0992 | .4437 | -.0066 | .0601 | .4506 |
| | 10.00 | .1955 | .4611 | -.0077 | .1124 | .4880 |
| | 15.00 | .3270 | .4848 | -.0148 | .1904 | .5529 |
| | 20.00 | .4681 | .5203 | -.0192 | .2619 | .6490 |
| | 25.00 | .6027 | .5475 | -.0209 | .3148 | .7509 |

| Configuration | α, deg | $C_N$ | $C_A$ | $C_m$ | $C_L$ | $C_D$ |
|---|---|---|---|---|---|---|
| 3321 | 16.00 | .3549 | .4950 | -.0113 | .2048 | .5736 |
| | 20.00 | .4660 | .5176 | -.0147 | .2609 | .6458 |
| | 25.00 | .5994 | .5390 | -.0137 | .3154 | .7418 |
| | 30.00 | .7244 | .5606 | -.0131 | .3470 | .8477 |
| | 35.00 | .8411 | .5685 | -.0131 | .3629 | .9481 |
| | 40.00 | .9455 | .5746 | -.0154 | .3550 | 1.0480 |
| | 45.00 | 1.0301 | .5671 | -.0150 | .3274 | 1.1294 |
| | 50.00 | 1.0965 | .5557 | -.0158 | .2791 | 1.1972 |
| | 55.00 | 1.1344 | .5277 | -.0152 | .2184 | 1.2319 |
| | 60.00 | 1.1533 | .4951 | -.0153 | .1479 | 1.2464 |
| | 61.00 | 1.1579 | .4994 | .0102 | .1246 | 1.2548 |
| | 65.00 | 1.1679 | .4797 | .0077 | .0588 | 1.2612 |
| | 70.00 | 1.1674 | .4545 | .0030 | -.0278 | 1.2524 |
| | 75.00 | 1.1508 | .4313 | -.0024 | -.1187 | 1.2232 |
| | 80.00 | 1.1343 | .3960 | -.0097 | -.1930 | 1.1859 |
| | 85.00 | 1.1124 | .3525 | -.0142 | -.2542 | 1.1389 |
| | 90.00 | 1.0827 | .3091 | -.0169 | -.3091 | 1.0827 |
| | 95.00 | 1.0253 | .2570 | -.0185 | -.3454 | .9990 |
| | 100.00 | .9758 | .1825 | -.0214 | -.3491 | .9293 |
| | 103.00 | .9427 | .1248 | -.0240 | -.3337 | .8904 |
| | 76.00 | 1.1336 | .4164 | -.0072 | -.1298 | 1.2006 |
| | 80.00 | 1.1172 | .3843 | -.0139 | -.1845 | 1.1669 |
| | 85.00 | 1.0924 | .3442 | -.0168 | -.2477 | 1.1182 |
| | 90.00 | 1.0615 | .2964 | -.0197 | -.2964 | 1.0615 |
| | 95.00 | 1.0170 | .2393 | -.0214 | -.3270 | .9922 |
| | 100.00 | .9597 | .1745 | -.0220 | -.3385 | .9148 |
| | 105.00 | .8873 | .0688 | -.0272 | -.2962 | .8393 |
| | 110.00 | .8143 | -.0897 | -.0313 | -.1942 | .7959 |
| | 115.00 | .7327 | -.2752 | -.0313 | -.0603 | .7804 |
| | 118.00 | .6795 | -.4021 | -.0317 | .0360 | .7888 |
| | 120.00 | .6473 | -.4125 | -.0616 | .0337 | .7666 |
| | 125.00 | .5430 | -.6601 | -.0545 | .2292 | .8234 |
| | 130.00 | .4489 | -.9041 | -.0431 | .4041 | .9250 |
| | 135.00 | .3525 | -1.1209 | -.0297 | .5433 | 1.0419 |
| | 140.00 | .2611 | -1.3136 | -.0168 | .6444 | 1.1741 |
| | 145.00 | .1859 | -1.4557 | .0063 | .6827 | 1.2990 |
| | 150.00 | .1178 | -1.5719 | .0101 | .6840 | 1.4202 |
| | 155.00 | .0878 | -1.6510 | .0132 | .6181 | 1.5334 |
| | 160.00 | .0624 | -1.7091 | .0136 | .5259 | 1.6273 |
| 3322 | 61.00 | 1.1612 | .4972 | .0107 | .1281 | 1.2566 |
| | 65.00 | 1.1678 | .4755 | .0082 | .0625 | 1.2594 |
| | 70.00 | 1.1691 | .4461 | .0047 | -.0193 | 1.2512 |
| | 75.00 | 1.1574 | .4192 | .0011 | -.1053 | 1.2265 |
| | 80.00 | 1.1408 | .3783 | -.0027 | -.1745 | 1.1892 |
| | 85.00 | 1.1256 | .3352 | -.0030 | -.2358 | 1.1505 |
| | 90.00 | 1.1089 | .2804 | -.0044 | -.2804 | 1.1089 |
| | 95.00 | 1.0674 | .2074 | -.0020 | -.2996 | 1.0452 |
| | 100.00 | 1.0176 | .1103 | .0034 | -.2853 | .9831 |
| | 103.00 | .9864 | .0548 | .0070 | -.2753 | .9488 |
| | 76.00 | 1.1367 | .4074 | -.0035 | -.1203 | 1.2015 |
| | 80.00 | 1.1267 | .3778 | -.0046 | -.1764 | 1.1752 |
| | 85.00 | 1.1076 | .3273 | -.0074 | -.2296 | 1.1319 |
| | 90.00 | 1.0762 | .2702 | -.0074 | -.2702 | 1.0762 |
| | 95.00 | 1.0438 | .2032 | -.0049 | -.2934 | 1.0221 |
| | 100.00 | .9948 | .1135 | .0004 | -.2845 | .9600 |
| | 105.00 | .9385 | .0008 | .0064 | -.2437 | .9063 |
| | 110.00 | .8817 | -.1284 | .0135 | -.1809 | .8724 |
| | 115.00 | .8026 | -.2802 | .0196 | -.0853 | .8458 |
| | 118.00 | .7452 | -.3618 | .0257 | -.0303 | .8279 |
| | 120.00 | .7271 | -.3434 | -.0071 | -.0662 | .8014 |
| | 125.00 | .6134 | -.5144 | .0074 | .0696 | .7975 |
| | 130.00 | .5116 | -.6801 | .0198 | .1921 | .8291 |
| | 135.00 | .4155 | -.8432 | .0222 | .3024 | .8900 |
| | 140.00 | .3288 | -.9968 | .0289 | .3888 | .9749 |
| | 145.00 | .2403 | -1.1537 | .0372 | .4649 | 1.0829 |
| | 150.00 | .1902 | -1.2807 | .0336 | .4757 | 1.2042 |
| | 155.00 | .1467 | -1.3895 | .0295 | .4542 | 1.3213 |
| | 160.00 | .1117 | -1.4829 | .0257 | .4022 | 1.4317 |
| 3323 | 61.00 | 1.1631 | .5016 | .0102 | .1252 | 1.2605 |
| | 65.00 | 1.1650 | .4818 | .0075 | .0557 | 1.2595 |
| | 70.00 | 1.1669 | .4567 | .0018 | -.0301 | 1.2527 |
| | 75.00 | 1.1527 | .4255 | -.0069 | -.1127 | 1.2235 |
| | 80.00 | 1.1485 | .3879 | -.0174 | -.1826 | 1.1985 |
| | 85.00 | 1.1273 | .3460 | -.0280 | -.2464 | 1.1532 |
| | 90.00 | 1.0990 | .2967 | -.0360 | -.2967 | 1.0990 |
| | 95.00 | 1.0515 | .2396 | -.0430 | -.3303 | 1.0266 |
| | 100.00 | 1.0069 | .1611 | -.0590 | -.3335 | .9636 |
| | 103.00 | .9819 | .0850 | -.0775 | -.3037 | .9376 |
| | 76.00 | 1.1491 | .4151 | -.0109 | -.1248 | 1.2154 |
| | 80.00 | 1.1399 | .3820 | -.0200 | -.1783 | 1.1889 |
| | 85.00 | 1.1168 | .3340 | -.0316 | -.2354 | 1.1417 |
| | 90.00 | 1.0859 | .2847 | -.0389 | -.2847 | 1.0859 |
| | 95.00 | 1.0432 | .2261 | -.0464 | -.3161 | 1.0195 |
| | 100.00 | .9892 | .1547 | -.0593 | -.3242 | .9473 |
| | 105.00 | .9392 | .0096 | -.0926 | -.2524 | .9047 |
| | 110.00 | .9062 | -.2396 | -.1500 | -.0848 | .9334 |
| | 115.00 | .8391 | -.4696 | -.1764 | .0710 | .9590 |
| | 118.00 | .8111 | -.6773 | -.2157 | .2172 | 1.0342 |

TABLE I. - AERODYNAMIC CHARACTERISTICS OF MODELS - Continued

$M_\infty = 6.0$

| Configuration | α, deg | $C_N$ | $C_A$ | $C_m$ | $C_L$ | $C_D$ |
|---|---|---|---|---|---|---|
| 3323 | 120.00 | .7966 | -.6877 | -.2431 | .1973 | 1.0338 |
| | 125.00 | .6840 | -.9637 | -.2400 | .3971 | 1.1131 |
| | 130.00 | .5529 | -1.1942 | -.1918 | .5594 | 1.1911 |
| | 135.00 | .3987 | -1.3093 | -.1061 | .6439 | 1.2077 |
| | 140.00 | .3071 | -1.5074 | -.0730 | .7336 | 1.3521 |
| | 145.00 | .2058 | -1.5675 | -.0048 | .7305 | 1.4020 |
| | 150.00 | .1165 | -1.6275 | .0170 | .7129 | 1.4677 |
| | 155.00 | .0821 | -1.6789 | .0210 | .6351 | 1.5563 |
| | 160.00 | .0543 | -1.7203 | .0224 | .5374 | 1.6351 |
| 3324 | 60.00 | 1.1157 | .5038 | .0083 | .1216 | 1.2181 |
| | 65.00 | 1.1385 | .4734 | .0068 | .0522 | 1.2319 |
| | 70.00 | 1.1342 | .4434 | .0047 | -.0288 | 1.2175 |
| | 75.00 | 1.1297 | .4039 | .0011 | -.0977 | 1.1957 |
| | 80.00 | 1.1286 | .3649 | .0019 | -.1634 | 1.1749 |
| | 85.00 | 1.1103 | .3237 | .0009 | -.2257 | 1.1343 |
| | 90.00 | 1.0892 | .2663 | -.0057 | -.2663 | 1.0892 |
| | 95.00 | 1.0655 | .1904 | .0033 | -.2826 | 1.0449 |
| | 100.00 | 1.0362 | .0948 | .0074 | -.2733 | 1.0040 |
| | 80.00 | 1.1764 | .3430 | -.0094 | -.1335 | 1.2181 |
| | 85.00 | 1.1583 | .2898 | -.0130 | -.1877 | 1.1792 |
| | 90.00 | 1.1356 | .2359 | -.0114 | -.2359 | 1.1356 |
| | 95.00 | 1.1114 | .1580 | -.0087 | -.2543 | 1.0934 |
| | 100.00 | 1.0793 | .0780 | -.0042 | -.2642 | 1.0494 |
| | 105.00 | 1.0297 | -.0276 | .0027 | -.2398 | 1.0017 |
| | 110.00 | .9815 | -.1492 | .0101 | -.1955 | .9733 |
| | 115.00 | .9143 | -.2712 | .0179 | -.1406 | .9432 |
| | 120.00 | .8075 | -.4139 | .0283 | -.0454 | .9063 |
| | 120.00 | .8009 | -.3669 | -.0106 | -.0828 | .8771 |
| | 125.00 | .6826 | -.5043 | .0009 | .0216 | .8485 |
| | 130.00 | .5758 | -.6407 | .0144 | .1207 | .8529 |
| | 135.00 | .4767 | -.7715 | .0160 | .2084 | .8826 |
| | 140.00 | .3839 | -.9102 | .0298 | .2910 | .9440 |
| | 145.00 | .2965 | -1.0457 | .0273 | .3569 | 1.0267 |
| | 150.00 | .2381 | -1.1733 | .0240 | .3805 | 1.1352 |
| | 155.00 | .1836 | -1.3104 | .0185 | .3874 | 1.2652 |
| | 160.00 | .1340 | -1.4284 | .0124 | .3626 | 1.3881 |
| | 150.00 | .2482 | -1.1571 | .0373 | .3630 | 1.1266 |
| | 155.00 | .2053 | -1.2773 | .0336 | .3537 | 1.2444 |
| | 160.00 | .1642 | -1.3876 | .0288 | .3203 | 1.3601 |
| | 165.00 | .1279 | -1.4969 | .0216 | .2639 | 1.4790 |
| | 170.00 | .0986 | -1.5610 | .0201 | .1740 | 1.5544 |
| | 175.00 | .0791 | -1.5899 | .0154 | .0598 | 1.5908 |
| | 177.00 | .0704 | -1.5962 | .0155 | .0132 | 1.5977 |
| | 179.00 | .0540 | -1.6014 | .0114 | -.0261 | 1.6021 |
| | 180.00 | .0508 | -1.5999 | .0097 | -.0508 | 1.5999 |
| | 181.00 | .0453 | -1.5994 | .0089 | -.0732 | 1.5984 |
| | 183.00 | .0344 | -1.5981 | .0071 | -.1180 | 1.5941 |
| | 185.00 | .0246 | -1.5956 | .0046 | -.1636 | 1.5874 |
| 3325 | 60.00 | 1.1148 | .5070 | .0070 | .1183 | 1.2189 |
| | 65.00 | 1.1362 | .4740 | .0054 | .0506 | 1.2300 |
| | 70.00 | 1.1386 | .4406 | .0028 | -.0246 | 1.2206 |
| | 75.00 | 1.1401 | .4012 | .0018 | -.0924 | 1.2051 |
| | 80.00 | 1.1415 | .3537 | -.0001 | -.1501 | 1.1856 |
| | 85.00 | 1.1243 | .3102 | -.0009 | -.2110 | 1.1470 |
| | 90.00 | 1.1086 | .2466 | -.0005 | -.2466 | 1.1086 |
| | 95.00 | 1.0935 | .1725 | .0050 | -.2671 | 1.0743 |
| | 100.00 | 1.0664 | .0812 | .0055 | -.2652 | 1.0361 |
| | 80.00 | 1.1765 | .3347 | -.0046 | -.1253 | 1.2167 |
| | 85.00 | 1.1673 | .2787 | -.0031 | -.1759 | 1.1872 |
| | 90.00 | 1.1516 | .2143 | -.0067 | -.2143 | 1.1516 |
| | 95.00 | 1.1321 | .1376 | -.0033 | -.2358 | 1.1158 |
| | 100.00 | 1.0951 | .0515 | .0013 | -.2409 | 1.0696 |
| | 105.00 | 1.0454 | -.0438 | .0042 | -.2283 | 1.0211 |
| | 110.00 | .9815 | -.1484 | .0072 | -.1963 | .9731 |
| | 115.00 | .9049 | -.2563 | .0145 | -.1501 | .9284 |
| | 120.00 | .8075 | -.3716 | .0230 | -.0820 | .8851 |
| | 120.00 | .7940 | -.3192 | -.0143 | -.1206 | .8472 |
| | 125.00 | .6881 | -.4576 | -.0015 | -.0199 | .8262 |
| | 130.00 | .5832 | -.6031 | .0108 | .0871 | .8345 |
| | 135.00 | .4837 | -.7423 | .0103 | .1829 | .8669 |
| | 140.00 | .3790 | -.8830 | .0290 | .2620 | .9329 |
| | 145.00 | .3236 | -1.0063 | .0262 | .3121 | 1.0099 |
| | 150.00 | .2714 | -1.1138 | .0260 | .3219 | 1.1003 |
| | 155.00 | .2250 | -1.2166 | .0250 | .3103 | 1.1977 |
| | 160.00 | .1809 | -1.3035 | .0230 | .2758 | 1.2868 |
| | 150.00 | .2858 | -1.0892 | .0301 | .2971 | 1.0862 |
| | 155.00 | .2436 | -1.1823 | .0290 | .2789 | 1.1745 |
| | 160.00 | .2066 | -1.2612 | .0267 | .2373 | 1.2558 |
| | 165.00 | .1670 | -1.3287 | .0224 | .1826 | 1.3266 |
| | 170.00 | .1284 | -1.3920 | .0155 | .1153 | 1.3932 |
| | 175.00 | .0956 | -1.4197 | .0093 | .0285 | 1.4226 |
| | 177.00 | .0793 | -1.4262 | .0064 | -.0046 | 1.4284 |
| | 179.00 | .0630 | -1.4336 | .0024 | -.0380 | 1.4345 |
| | 180.00 | .0533 | -1.4343 | .0006 | -.0533 | 1.4343 |
| | 181.00 | .0466 | -1.4333 | .0003 | -.0716 | 1.4323 |
| | 183.00 | .0313 | -1.4300 | -.0030 | -.1061 | 1.4264 |
| | 185.00 | .0151 | -1.4241 | -.0063 | -.1391 | 1.4174 |

| Configuration | α, deg | $C_N$ | $C_A$ | $C_m$ | $C_L$ | $C_D$ |
|---|---|---|---|---|---|---|
| 3326 | 60.00 | 1.1398 | .4825 | .0042 | .1520 | 1.2284 |
| | 65.00 | 1.1663 | .4427 | -.0002 | .0917 | 1.2441 |
| | 70.00 | 1.1787 | .4049 | -.0036 | .0226 | 1.2461 |
| | 75.00 | 1.1889 | .3551 | -.0087 | -.0353 | 1.2403 |
| | 80.00 | 1.2061 | .2961 | -.0143 | -.0822 | 1.2392 |
| | 85.00 | 1.2090 | .2264 | -.0222 | -.1201 | 1.2241 |
| | 90.00 | 1.2187 | .1529 | -.0256 | -.1529 | 1.2187 |
| | 95.00 | 1.2238 | .0630 | -.0312 | -.1695 | 1.2136 |
| | 100.00 | 1.2109 | -.0258 | -.0351 | -.1849 | 1.1970 |
| | 80.00 | 1.2327 | .2796 | -.0188 | -.0613 | 1.2626 |
| | 85.00 | 1.2451 | .2050 | -.0275 | -.0957 | 1.2583 |
| | 90.00 | 1.2537 | .1217 | -.0332 | -.1217 | 1.2537 |
| | 95.00 | 1.2536 | .0343 | -.0361 | -.1435 | 1.2458 |
| | 100.00 | 1.2400 | -.0533 | -.0401 | -.1628 | 1.2305 |
| | 105.00 | 1.1936 | -.1338 | -.0425 | -.1797 | 1.1875 |
| | 110.00 | 1.1377 | -.2224 | -.0444 | -.1891 | 1.1452 |
| | 115.00 | 1.0613 | -.3049 | -.0423 | -.1722 | 1.0908 |
| | 120.00 | .9707 | -.3861 | -.0380 | -.1510 | 1.0337 |
| | 120.00 | .9473 | -.3450 | -.0791 | -.1749 | .9929 |
| | 125.00 | .8388 | -.4491 | -.0652 | -.1132 | .9447 |
| | 130.00 | .7352 | -.5435 | -.0544 | -.0563 | .9126 |
| | 135.00 | .6414 | -.6488 | -.0524 | .0053 | .9123 |
| | 140.00 | .5498 | -.7418 | -.0463 | .0556 | .9216 |
| | 145.00 | .4879 | -.8242 | -.0491 | .0730 | .9549 |
| | 150.00 | .4296 | -.9018 | -.0443 | .0789 | .9958 |
| | 155.00 | .3654 | -.9907 | -.0381 | .0875 | 1.0523 |
| | 160.00 | .2954 | -1.0888 | -.0339 | .0948 | 1.1241 |
| | 150.00 | .4520 | -.8903 | -.0295 | .0538 | .9970 |
| | 155.00 | .3938 | -.9727 | -.0242 | .0542 | 1.0480 |
| | 160.00 | .3334 | -1.0626 | -.0170 | .0501 | 1.1125 |
| | 165.00 | .2687 | -1.1601 | -.0139 | .0408 | 1.1901 |
| | 170.00 | .2167 | -1.2377 | -.0035 | .0015 | 1.2565 |
| | 175.00 | .1508 | -1.2979 | .0041 | -.0371 | 1.3061 |
| | 177.00 | .1191 | -1.3094 | .0055 | -.0504 | 1.3138 |
| | 179.00 | .0887 | -1.3142 | .0073 | -.0658 | 1.3155 |
| | 180.00 | .0734 | -1.3177 | .0094 | -.0734 | 1.3177 |
| | 181.00 | .0560 | -1.3163 | .0108 | -.0790 | 1.3151 |
| | 183.00 | .0288 | -1.3102 | .0126 | -.0974 | 1.3069 |
| | 185.00 | -.0006 | -1.3033 | .0155 | -.1130 | 1.2981 |
| 1151 | -5.00 | -.0694 | .7912 | .0110 | -.0001 | .7942 |
| | -3.00 | -.0354 | .7985 | .0041 | .0064 | .7993 |
| | -1.00 | -.0076 | .7973 | .0007 | .0063 | .7973 |
| | .00 | .0062 | .7988 | -.0017 | .0062 | .7988 |
| | 1.00 | .0220 | .7957 | -.0047 | .0081 | .7960 |
| | 3.00 | .0537 | .7942 | -.0103 | .0120 | .7959 |
| | 5.00 | .0851 | .7933 | -.0156 | .0157 | .7977 |
| | 10.00 | .1594 | .7840 | -.0280 | .0209 | .7998 |
| | 15.00 | .2364 | .7751 | -.0427 | .0277 | .8099 |
| | 20.00 | .3140 | .7778 | -.0591 | .0291 | .8383 |
| | 25.00 | .3869 | .7653 | -.0743 | .0273 | .8571 |
| | 16.00 | .2528 | .7730 | -.0468 | .0299 | .8128 |
| | 20.00 | .3157 | .7571 | -.0589 | .0378 | .8194 |
| | 25.00 | .3821 | .7473 | -.0715 | .0305 | .8388 |
| | 30.00 | .4463 | .7311 | -.0839 | .0209 | .8563 |
| | 35.00 | .4994 | .7083 | -.0939 | .0028 | .8666 |
| | 40.00 | .5451 | .6780 | -.1044 | -.0182 | .8698 |
| | 45.00 | .5649 | .6460 | -.1077 | -.0574 | .8562 |
| | 50.00 | .5739 | .6043 | -.1110 | -.0945 | .8284 |
| | 55.00 | .5748 | .5628 | -.1132 | -.1313 | .7936 |
| | 60.00 | .5718 | .5144 | -.1143 | -.1596 | .7524 |
| | 61.00 | .5777 | .5356 | -.0999 | -.1883 | .7650 |
| | 65.00 | .5687 | .4977 | -.1000 | -.2108 | .7257 |
| | 70.00 | .5515 | .4474 | -.0992 | -.2318 | .6712 |
| | 75.00 | .5269 | .3958 | -.0976 | -.2459 | .6113 |
| | 80.00 | .5035 | .3458 | -.0935 | -.2531 | .5559 |
| | 85.00 | .4791 | .2908 | -.0887 | -.2479 | .5026 |
| | 90.00 | .4489 | .2315 | -.0833 | -.2315 | .4489 |
| | 95.00 | .4230 | .1708 | -.0779 | -.2071 | .4065 |
| | 100.00 | .3910 | .0877 | -.0740 | -.1543 | .3699 |
| | 103.00 | .3683 | .0148 | -.0720 | -.0972 | .3556 |
| | 77.00 | .5201 | .3740 | -.0960 | -.2474 | .5909 |
| | 80.00 | .5051 | .3444 | -.0934 | -.2515 | .5572 |
| | 85.00 | .4796 | .2883 | -.0888 | -.2454 | .5029 |
| | 90.00 | .4465 | .2343 | -.0831 | -.2343 | .4465 |
| | 95.00 | .4171 | .1725 | -.0775 | -.2082 | .4005 |
| | 100.00 | .3863 | .0960 | -.0730 | -.1616 | .3637 |
| | 105.00 | .3532 | -.0246 | -.0699 | -.0676 | .3476 |
| | 110.00 | .3173 | -.1808 | -.0630 | .0614 | .3600 |
| | 115.00 | .2764 | -.3749 | -.0536 | .2230 | .4089 |
| | 118.00 | .2477 | -.4990 | -.0462 | .3243 | .4530 |
| | 121.00 | .2260 | -.5692 | -.0385 | .3715 | .4869 |
| | 125.00 | .1859 | -.7421 | -.0275 | .5013 | .5780 |
| | 130.00 | .1374 | -.9580 | -.0150 | .6456 | .7211 |
| | 135.00 | .1055 | -1.1582 | .0044 | .7444 | .8936 |
| | 140.00 | .0709 | -1.3176 | .0148 | .7926 | 1.0549 |
| | 145.00 | .0468 | -1.4382 | .0232 | .7866 | 1.2049 |
| | 150.00 | .0305 | -1.5270 | .0268 | .7371 | 1.3377 |
| | 155.00 | .0177 | -1.5936 | .0281 | .6575 | 1.4518 |
| | 160.00 | .0048 | -1.6518 | .0269 | .5604 | 1.5538 |
| | 165.00 | -.0048 | -1.6921 | .0232 | .4425 | 1.6333 |

TABLE I. - AERODYNAMIC CHARACTERISTICS OF MODELS - Continued

$M_\infty = 6.0$

| Configuration | α, deg | $C_N$ | $C_A$ | $C_m$ | $C_L$ | $C_D$ |
|---|---|---|---|---|---|---|
| 1131 | 153.00 | .0162 | -1.5992 | .0249 | .7116 | 1.4323 |
| | 155.00 | .0111 | -1.6197 | .0249 | .6744 | 1.4727 |
| | 160.00 | .0011 | -1.6822 | .0237 | .5743 | 1.5811 |
| | 165.00 | -.0079 | -1.7223 | .0189 | .4534 | 1.6616 |
| | 170.00 | -.0056 | -1.7415 | .0142 | .3079 | 1.7140 |
| | 175.00 | -.0086 | -1.7526 | .0054 | .1614 | 1.7452 |
| | 177.00 | -.0087 | -1.7643 | .0024 | .1010 | 1.7614 |
| | 179.00 | -.0089 | -1.7905 | -.0017 | .0401 | 1.7900 |
| | 180.00 | -.0090 | -1.7935 | -.0040 | .0090 | 1.7935 |
| | 181.00 | -.0078 | -1.7904 | -.0049 | -.0234 | 1.7902 |
| | 183.00 | -.0093 | -1.7968 | -.0089 | -.0847 | 1.7948 |
| | 185.00 | -.0094 | -1.7905 | -.0115 | -.1467 | 1.7845 |
| 1231 | -5.00 | -.0936 | .5342 | .0085 | -.0466 | .5404 |
| | -3.00 | -.0532 | .5339 | .0038 | -.0252 | .5360 |
| | -1.00 | -.0193 | .5289 | .0023 | -.0101 | .5291 |
| | .00 | -.0003 | .5333 | .0009 | -.0003 | .5333 |
| | 1.00 | .0174 | .5335 | .0002 | .0081 | .5337 |
| | 3.00 | .0567 | .5283 | -.0040 | .0289 | .5306 |
| | 5.00 | .0997 | .5326 | -.0086 | .0529 | .5393 |
| | 10.00 | .1951 | .5411 | -.0169 | .0981 | .5668 |
| | 15.00 | .3002 | .5519 | -.0279 | .1472 | .6108 |
| | 20.00 | .4147 | .5727 | -.0426 | .1938 | .6800 |
| | 25.00 | .5187 | .5932 | -.0551 | .2194 | .7568 |
| | 16.00 | .3309 | .5520 | -.0339 | .1659 | .6218 |
| | 20.00 | .4158 | .5596 | -.0427 | .1993 | .6681 |
| | 25.00 | .5139 | .5726 | -.0512 | .2238 | .7362 |
| | 30.00 | .6090 | .5856 | -.0602 | .2346 | .8116 |
| | 35.00 | .6874 | .5862 | -.0679 | .2269 | .8745 |
| | 40.00 | .7629 | .5912 | -.0784 | .2044 | .9433 |
| | 45.00 | .7999 | .5765 | -.0783 | .1580 | .9732 |
| | 50.00 | .8256 | .5585 | -.0820 | .1029 | .9914 |
| | 55.00 | .8343 | .5409 | -.0866 | .0354 | .9936 |
| | 60.00 | .8399 | .5142 | -.0917 | -.0253 | .9845 |
| | 61.00 | .8436 | .5220 | -.0695 | -.0476 | .9909 |
| | 65.00 | .8360 | .4989 | -.0740 | -.0989 | .9685 |
| | 70.00 | .8228 | .4685 | -.0770 | -.1588 | .9334 |
| | 75.00 | .8082 | .4259 | -.0827 | -.2022 | .8909 |
| | 80.00 | .7748 | .3921 | -.0835 | -.2516 | .8311 |
| | 85.00 | .7468 | .3454 | -.0839 | -.2790 | .7741 |
| | 90.00 | .7111 | .2971 | -.0825 | -.2971 | .7111 |
| | 95.00 | .6755 | .2401 | -.0801 | -.2981 | .6520 |
| | 100.00 | .6314 | .1656 | -.0790 | -.2727 | .5930 |
| | 103.00 | .5994 | .1015 | -.0766 | -.2337 | .5612 |
| | 76.00 | .8074 | .4241 | -.0853 | -.2162 | .8860 |
| | 80.00 | .7852 | .3881 | -.0888 | -.2459 | .8407 |
| | 85.00 | .7549 | .3476 | -.0864 | -.2806 | .7814 |
| | 90.00 | .7143 | .2953 | -.0852 | -.2953 | .7143 |
| | 95.00 | .6792 | .2380 | -.0813 | -.2963 | .6559 |
| | 100.00 | .6342 | .1561 | -.0805 | -.2638 | .5975 |
| | 105.00 | .5770 | .0359 | -.0777 | -.1840 | .5480 |
| | 110.00 | .5229 | -.1242 | -.0712 | -.0621 | .5339 |
| | 115.00 | .4649 | -.3249 | -.0647 | .0980 | .5586 |
| | 118.00 | .4219 | -.4496 | -.0583 | .1989 | .5836 |
| | 121.00 | .3623 | -.5157 | -.0534 | .2554 | .5762 |
| | 125.00 | .3075 | -.6913 | -.0343 | .3899 | .6484 |
| | 130.00 | .2439 | -.9193 | -.0157 | .5474 | .7777 |
| | 135.00 | .1751 | -1.1289 | -.0045 | .6745 | .9221 |
| | 140.00 | .1218 | -1.2943 | .0121 | .7387 | 1.0698 |
| | 145.00 | .0822 | -1.4171 | .0213 | .7455 | 1.2079 |
| | 150.00 | .0589 | -1.5111 | .0258 | .7046 | 1.3381 |
| | 155.00 | .0474 | -1.5764 | .0297 | .6232 | 1.4487 |
| | 160.00 | .0286 | -1.6346 | .0282 | .5322 | 1.5458 |
| | 162.70 | .0202 | -1.6563 | .0267 | .4732 | 1.5874 |
| | 151.00 | .0421 | -1.5774 | .0174 | .7279 | 1.4000 |
| | 155.00 | .0337 | -1.6108 | .0246 | .6503 | 1.4741 |
| | 160.00 | .0224 | -1.6643 | .0244 | .5482 | 1.5716 |
| | 165.00 | .0072 | -1.7210 | .0210 | .4384 | 1.6643 |
| | 170.00 | -.0083 | -1.7455 | .0128 | .3113 | 1.7176 |
| | 175.00 | -.0111 | -1.7645 | .0061 | .1649 | 1.7568 |
| | 177.00 | -.0151 | -1.7706 | .0016 | .1078 | 1.7674 |
| | 179.00 | -.0102 | -1.7675 | -.0012 | .0410 | 1.7670 |
| | 180.00 | -.0116 | -1.7706 | -.0036 | .0116 | 1.7706 |
| | 181.00 | -.0053 | -1.7939 | -.0039 | -.0260 | 1.7937 |
| | 183.00 | -.0054 | -1.7970 | -.0065 | -.0887 | 1.7948 |
| | 185.00 | -.0094 | -1.7970 | -.0100 | -.1472 | 1.7910 |
| 1232 | 61.00 | .8484 | .5202 | -.0713 | -.0437 | .9942 |
| | 65.00 | .8403 | .4925 | -.0745 | -.0913 | .9697 |
| | 70.00 | .8311 | .4562 | -.0772 | -.1444 | .9370 |
| | 75.00 | .8184 | .4157 | -.0784 | -.1897 | .8981 |
| | 80.00 | .7892 | .3752 | -.0774 | -.2325 | .8424 |
| | 85.00 | .7643 | .3274 | -.0744 | -.2596 | .7899 |
| | 90.00 | .7342 | .2622 | -.0717 | -.2622 | .7342 |
| | 95.00 | .7064 | .1901 | -.0637 | -.2510 | .6871 |
| | 100.00 | .6744 | .1024 | -.0511 | -.2179 | .6464 |
| | 103.00 | .6494 | .0268 | -.0436 | -.1722 | .6268 |
| 1232 | 76.00 | .8368 | .4139 | -.0793 | -.2064 | .8829 |
| | 80.00 | .7860 | .3764 | -.0786 | -.2342 | .8395 |
| | 85.00 | .7626 | .3214 | -.0778 | -.2537 | .7877 |
| | 90.00 | .7265 | .2636 | -.0726 | -.2636 | .7265 |
| | 95.00 | .7006 | .1850 | -.0643 | -.2454 | .6818 |
| | 100.00 | .6677 | .0877 | -.0532 | -.2023 | .6424 |
| | 105.00 | .6246 | -.0256 | -.0375 | -.1370 | .6099 |
| | 110.00 | .5853 | -.1656 | -.0204 | -.0446 | .6066 |
| | 115.00 | .5273 | -.3134 | -.0041 | .0612 | .6103 |
| | 118.00 | .4860 | -.4080 | .0048 | .1320 | .6206 |
| | 121.00 | .4348 | -.4421 | .0139 | .1551 | .6004 |
| | 125.00 | .3791 | -.5641 | .0313 | .2447 | .6341 |
| | 130.00 | .3069 | -.7171 | .0450 | .3520 | .6960 |
| | 135.00 | .2410 | -.8599 | .0506 | .4376 | .7784 |
| | 140.00 | .1913 | -.9995 | .0555 | .4960 | .8887 |
| | 145.00 | .1569 | -1.1255 | .0551 | .5171 | 1.0120 |
| | 150.00 | .1307 | -1.2404 | .0533 | .5070 | 1.1396 |
| | 155.00 | .1024 | -1.3441 | .0470 | .4752 | 1.2615 |
| | 160.00 | .0774 | -1.4352 | .0417 | .4182 | 1.3751 |
| | 162.70 | .0642 | -1.4700 | .0373 | .3758 | 1.4226 |
| | 151.00 | .1160 | -1.2942 | .0482 | .5259 | 1.1881 |
| | 155.00 | .0954 | -1.3750 | .0431 | .4946 | 1.2865 |
| | 160.00 | .0697 | -1.4295 | .0369 | .4234 | 1.3671 |
| | 165.00 | .0440 | -1.5499 | .0278 | .3586 | 1.5085 |
| | 170.00 | .0234 | -1.5812 | .0196 | .2516 | 1.5613 |
| | 175.00 | .0054 | -1.6211 | .0100 | .1359 | 1.6154 |
| | 177.00 | -.0011 | -1.6242 | .0051 | .0861 | 1.6219 |
| | 179.00 | -.0052 | -1.6305 | -.0018 | .0337 | 1.6302 |
| | 180.00 | -.0028 | -1.6323 | -.0022 | .0028 | 1.6323 |
| | 181.00 | -.0015 | -1.6323 | -.0024 | -.0270 | 1.6321 |
| | 183.00 | -.0029 | -1.6319 | -.0056 | -.0825 | 1.6299 |
| | 185.00 | -.0121 | -1.6269 | -.0112 | -.1297 | 1.6218 |
| 1233 | 61.00 | .8462 | .5217 | -.0708 | -.0461 | .9930 |
| | 65.00 | .8401 | .4998 | -.0745 | -.0980 | .9726 |
| | 70.00 | .8284 | .4665 | -.0798 | -.1551 | .9380 |
| | 75.00 | .8251 | .4261 | -.0857 | -.1980 | .9073 |
| | 80.00 | .7902 | .3834 | -.0932 | -.2404 | .8448 |
| | 85.00 | .7620 | .3337 | -.0990 | -.2660 | .7882 |
| | 90.00 | .7303 | .2833 | -.1009 | -.2833 | .7303 |
| | 95.00 | .6911 | .2282 | -.1042 | -.2875 | .6686 |
| | 100.00 | .6638 | .1381 | -.1170 | -.2513 | .6297 |
| | 103.00 | .6437 | .0358 | -.1362 | -.1797 | .6191 |
| | 76.00 | .8064 | .4204 | -.0898 | -.2128 | .8841 |
| | 80.00 | .7906 | .3814 | -.0951 | -.2383 | .8448 |
| | 85.00 | .7601 | .3321 | -.1008 | -.2645 | .7861 |
| | 90.00 | .7231 | .2874 | -.1016 | -.2874 | .7231 |
| | 95.00 | .6882 | .2235 | -.1045 | -.2827 | .6661 |
| | 100.00 | .6559 | .1234 | -.1192 | -.2354 | .6245 |
| | 105.00 | .6263 | -.0497 | -.1506 | -.1141 | .6179 |
| | 110.00 | .6055 | -.2885 | -.1864 | .0640 | .6677 |
| | 115.00 | .5525 | -.5142 | -.1983 | .2325 | .7180 |
| | 118.00 | .5462 | -.7293 | -.2363 | .3875 | .8247 |
| | 121.00 | .4969 | -.7994 | -.2276 | .4293 | .8376 |
| | 125.00 | .4381 | -.9976 | -.1998 | .5659 | .9311 |
| | 130.00 | .3502 | -1.2124 | -.1605 | .7036 | 1.0476 |
| | 135.00 | .2382 | -1.3468 | -.0910 | .7839 | 1.1207 |
| | 140.00 | .1554 | -1.5143 | -.0484 | .8544 | 1.2599 |
| | 145.00 | .0818 | -1.5589 | .0133 | .8272 | 1.3239 |
| | 150.00 | .0484 | -1.5965 | .0274 | .7564 | 1.4068 |
| | 155.00 | .0345 | -1.6378 | .0333 | .6609 | 1.4990 |
| | 160.00 | .0182 | -1.6721 | .0348 | .5548 | 1.5775 |
| | 162.70 | .0147 | -1.6917 | .0351 | .4891 | 1.6196 |
| | 151.00 | .0299 | -1.6473 | .0213 | .7724 | 1.4553 |
| | 155.00 | .0228 | -1.6646 | .0277 | .6828 | 1.5182 |
| | 160.00 | .0115 | -1.7055 | .0297 | .5725 | 1.6065 |
| | 165.00 | -.0066 | -1.7453 | .0233 | .4581 | 1.6841 |
| | 170.00 | -.0146 | -1.7622 | .0151 | .3204 | 1.7329 |
| | 175.00 | -.0162 | -1.7947 | .0059 | .1725 | 1.7865 |
| | 177.00 | -.0190 | -1.7916 | .0011 | .1128 | 1.7881 |
| | 179.00 | -.0141 | -1.7885 | -.0039 | .0453 | 1.7880 |
| | 180.00 | -.0078 | -1.7916 | -.0023 | .0078 | 1.7916 |
| | 181.00 | -.0040 | -1.7917 | -.0037 | -.0273 | 1.7915 |
| | 183.00 | -.0016 | -1.7947 | -.0061 | -.0923 | 1.7923 |
| | 185.00 | -.0031 | -1.7948 | -.0096 | -.1533 | 1.7883 |
| 2231 | -5.00 | -.0893 | .5089 | .0062 | -.0446 | .5148 |
| | -3.00 | -.0506 | .4999 | .0020 | -.0243 | .5018 |
| | -1.00 | -.0139 | .5019 | -.0004 | -.0051 | .5020 |
| | .00 | .0049 | .5001 | -.0030 | .0049 | .5001 |
| | 1.00 | .0200 | .5026 | -.0023 | .0112 | .5028 |
| | 3.00 | .0578 | .5031 | -.0056 | .0314 | .5054 |
| | 5.00 | .0949 | .5062 | -.0085 | .0504 | .5126 |
| | 10.00 | .1968 | .5206 | -.0189 | .1034 | .5469 |
| | 15.00 | .3150 | .5413 | -.0328 | .1642 | .6044 |
| | 20.00 | .4299 | .5728 | -.0429 | .2081 | .6853 |
| | 25.00 | .5343 | .5942 | -.0521 | .2331 | .7643 |

TABLE I. - AERODYNAMIC CHARACTERISTICS OF MODELS - Continued

$M_\infty = 6.0$

| Configuration | α, deg | $C_N$ | $C_A$ | $C_m$ | $C_L$ | $C_D$ |
|---|---|---|---|---|---|---|
| 2231 | 16.00 | .3407 | .5507 | -.0345 | .1757 | .6233 |
| | 20.00 | .4324 | .5692 | -.0416 | .2116 | .6828 |
| | 25.00 | .5333 | .5821 | -.0471 | .2373 | .7530 |
| | 30.00 | .6272 | .6003 | -.0541 | .2430 | .8335 |
| | 35.00 | .7113 | .6100 | -.0613 | .2328 | .9077 |
| | 40.00 | .7787 | .6045 | -.0661 | .2079 | .9636 |
| | 45.00 | .8229 | .5908 | -.0686 | .1641 | .9997 |
| | 50.00 | .8498 | .5641 | -.0720 | .1141 | 1.0136 |
| | 55.00 | .8577 | .5390 | -.0739 | .0505 | 1.0118 |
| | 60.00 | .8627 | .5104 | -.0760 | -.0106 | 1.0023 |
| | 61.00 | .8714 | .5174 | -.0563 | -.0300 | 1.0129 |
| | 65.00 | .8693 | .4928 | -.0599 | -.0792 | .9962 |
| | 70.00 | .8576 | .4609 | -.0633 | -.1398 | .9635 |
| | 75.00 | .8506 | .4219 | -.0687 | -.1873 | .9308 |
| | 80.00 | .8176 | .3876 | -.0704 | -.2397 | .8725 |
| | 85.00 | .7886 | .3414 | -.0714 | -.2714 | .8154 |
| | 90.00 | .7532 | .3026 | -.0686 | -.3026 | .7532 |
| | 95.00 | .7228 | .2457 | -.0670 | -.3078 | .6987 |
| | 100.00 | .6746 | .1716 | -.0648 | -.2861 | .6346 |
| | 103.00 | .6448 | .1070 | -.0648 | -.2493 | .6042 |
| | 76.00 | .8368 | .4266 | -.0692 | -.2115 | .9151 |
| | 80.00 | .8168 | .3917 | -.0724 | -.2440 | .8724 |
| | 85.00 | .7857 | .3489 | -.0719 | -.2791 | .8131 |
| | 90.00 | .7564 | .2980 | -.0715 | -.2980 | .7564 |
| | 95.00 | .7167 | .2424 | -.0665 | -.3040 | .6929 |
| | 100.00 | .6703 | .1629 | -.0658 | -.2768 | .6318 |
| | 105.00 | .6118 | .0431 | -.0654 | -.1999 | .5798 |
| | 110.00 | .5625 | -.1214 | -.0601 | -.0783 | .5701 |
| | 115.00 | .4873 | -.3149 | -.0524 | .0795 | .5747 |
| | 118.00 | .4457 | -.4381 | -.0485 | .1776 | .5992 |
| | 120.00 | .3729 | -.4580 | -.0828 | .2101 | .5519 |
| | 125.00 | .3268 | -.6986 | -.0506 | .3849 | .6684 |
| | 130.00 | .2412 | -.9411 | -.0518 | .5659 | .7897 |
| | 135.00 | .1759 | -1.1651 | -.0258 | .6995 | .9483 |
| | 140.00 | .1076 | -1.3453 | -.0145 | .7823 | 1.0998 |
| | 145.00 | .0725 | -1.4772 | -.0007 | .7879 | 1.2516 |
| | 150.00 | .0463 | -1.5702 | .0040 | .7450 | 1.3830 |
| | 155.00 | .0338 | -1.6428 | .0078 | .6637 | 1.5032 |
| | 160.00 | .0142 | -1.6990 | .0066 | .5678 | 1.6014 |
| 2232 | 61.00 | .8763 | .5169 | -.0575 | -.0273 | 1.0170 |
| | 65.00 | .8729 | .4893 | -.0598 | -.0746 | .9979 |
| | 70.00 | .8663 | .4530 | -.0615 | -.1294 | .9690 |
| | 75.00 | .8563 | .4078 | -.0640 | -.1723 | .9326 |
| | 80.00 | .8283 | .3713 | -.0629 | -.2219 | .8802 |
| | 85.00 | .8054 | .3217 | -.0612 | -.2503 | .8303 |
| | 90.00 | .7804 | .2656 | -.0571 | -.2656 | .7804 |
| | 95.00 | .7551 | .1957 | -.0499 | -.2608 | .7351 |
| | 100.00 | .7207 | .1012 | -.0396 | -.2248 | .6922 |
| | 103.00 | .6938 | .0313 | -.0300 | -.1866 | .6690 |
| | 76.00 | .8506 | .4048 | -.0674 | -.1870 | .9232 |
| | 80.00 | .8355 | .3677 | -.0672 | -.2170 | .8867 |
| | 85.00 | .8100 | .3223 | -.0636 | -.2505 | .8350 |
| | 90.00 | .7822 | .2613 | -.0590 | -.2613 | .7822 |
| | 95.00 | .7499 | .1905 | -.0496 | -.2552 | .7305 |
| | 100.00 | .7165 | .0946 | -.0389 | -.2176 | .6892 |
| | 105.00 | .6688 | -.0227 | -.0254 | -.1512 | .6519 |
| | 110.00 | .6269 | -.1625 | -.0095 | -.0617 | .6447 |
| | 115.00 | .5592 | -.3150 | .0068 | .0492 | .6399 |
| | 118.00 | .5228 | -.4033 | .0152 | .1107 | .6509 |
| | 120.00 | .4588 | -.4005 | -.0122 | .1174 | .5976 |
| | 125.00 | .3842 | -.5681 | .0126 | .2450 | .6406 |
| | 130.00 | .3235 | -.7400 | .0298 | .3590 | .7235 |
| | 135.00 | .2455 | -.8903 | .0225 | .4559 | .8031 |
| | 140.00 | .1905 | -1.0341 | .0232 | .5188 | .9147 |
| | 145.00 | .1507 | -1.1730 | .0385 | .5494 | 1.0473 |
| | 150.00 | .1219 | -1.2915 | .0380 | .5402 | 1.1795 |
| | 155.00 | .0928 | -1.3973 | .0332 | .5064 | 1.3056 |
| | 160.00 | .0672 | -1.4897 | .0271 | .4464 | 1.4229 |
| 2233 | 61.00 | .8813 | .5186 | -.0561 | -.0263 | 1.0222 |
| | 65.00 | .8792 | .4961 | -.0597 | -.0780 | 1.0065 |
| | 70.00 | .8691 | .4576 | -.0659 | -.1328 | .9732 |
| | 75.00 | .8641 | .4209 | -.0723 | -.1830 | .9436 |
| | 80.00 | .8341 | .3833 | -.0786 | -.2327 | .8880 |
| | 85.00 | .8077 | .3367 | -.0842 | -.2650 | .8339 |
| | 90.00 | .7762 | .2910 | -.0864 | -.2910 | .7762 |
| | 95.00 | .7368 | .2350 | -.0900 | -.2983 | .7135 |
| | 100.00 | .7101 | .1403 | -.1045 | -.2615 | .6749 |
| | 103.00 | .6866 | .0376 | -.1252 | -.1911 | .6605 |
| | 76.00 | .8197 | .4045 | -.0724 | -.1942 | .8933 |
| | 80.00 | .8051 | .3641 | -.0788 | -.2188 | .8561 |
| | 85.00 | .7771 | .3233 | -.0826 | -.2544 | .8023 |
| | 90.00 | .7440 | .2687 | -.0859 | -.2687 | .7440 |
| | 95.00 | .7078 | .2115 | -.0886 | -.2724 | .6867 |
| | 100.00 | .6746 | .1258 | -.1003 | -.2410 | .6426 |
| | 105.00 | .6430 | -.0411 | -.1323 | -.1267 | .6317 |
| | 110.00 | .6191 | -.2734 | -.1698 | .0452 | .6753 |
| | 115.00 | .5617 | -.4915 | -.1827 | .2081 | .7168 |
| | 118.00 | .5541 | -.6925 | -.2170 | .3513 | .8143 |

| Configuration | α, deg | $C_N$ | $C_A$ | $C_m$ | $C_L$ | $C_D$ |
|---|---|---|---|---|---|---|
| 2233 | 120.00 | .5193 | -.7590 | -.2548 | .3976 | .8292 |
| | 125.00 | .4389 | -1.0259 | -.2304 | .5887 | .9479 |
| | 130.00 | .3497 | -1.2576 | -.1751 | .7386 | 1.0763 |
| | 135.00 | .2370 | -1.3888 | -.0994 | .8144 | 1.1496 |
| | 140.00 | .1540 | -1.5709 | -.0623 | .8918 | 1.3024 |
| | 145.00 | .0757 | -1.6222 | -.0016 | .8685 | 1.3722 |
| | 150.00 | .0372 | -1.6612 | .0089 | .7984 | 1.4572 |
| | 155.00 | .0237 | -1.7083 | .0136 | .7005 | 1.5582 |
| | 160.00 | .0077 | -1.7440 | .0156 | .5893 | 1.6414 |
| 3231 | -5.00 | -.0769 | .4922 | .0035 | -.0337 | .4970 |
| | -3.00 | -.0391 | .4879 | .0001 | -.0135 | .4892 |
| | -1.00 | -.0068 | .4868 | -.0020 | .0022 | .4868 |
| | .00 | .0088 | .4867 | -.0020 | .0088 | .4867 |
| | 1.00 | .0315 | .4882 | -.0061 | .0230 | .4886 |
| | 3.00 | .0695 | .4895 | -.0109 | .0438 | .4924 |
| | 5.00 | .1010 | .4973 | -.0114 | .0573 | .5042 |
| | 10.00 | .2042 | .5084 | -.0230 | .1128 | .5362 |
| | 15.00 | .3207 | .5406 | -.0349 | .1699 | .6052 |
| | 20.00 | .4309 | .5823 | -.0423 | .2057 | .6946 |
| | 25.00 | .5420 | .6074 | -.0529 | .2345 | .7796 |
| | 25.00 | .0193 | .4919 | -.0086 | -.1904 | .4540 |
| | 16.00 | .3487 | .5595 | -.0353 | .1810 | .6339 |
| | 20.00 | .4393 | .5812 | -.0412 | .2140 | .6963 |
| | 25.00 | .5427 | .6036 | -.0472 | .2368 | .7764 |
| | 30.00 | .6350 | .6209 | -.0511 | .2394 | .8552 |
| | 35.00 | .7214 | .6289 | -.0589 | .2302 | .9290 |
| | 40.00 | .7860 | .6284 | -.0631 | .1982 | .9866 |
| | 45.00 | .8304 | .6064 | -.0645 | .1584 | 1.0160 |
| | 50.00 | .8606 | .5750 | -.0675 | .1127 | 1.0289 |
| | 55.00 | .8684 | .5467 | -.0683 | .0503 | 1.0249 |
| | 60.00 | .8776 | .5079 | -.0738 | -.0011 | 1.0140 |
| | 61.00 | .8712 | .4997 | -.0484 | -.0146 | 1.0043 |
| | 65.00 | .8624 | .4755 | -.0515 | -.0665 | .9826 |
| | 70.00 | .8480 | .4412 | -.0561 | -.1246 | .9478 |
| | 75.00 | .8256 | .4098 | -.0591 | -.1821 | .9036 |
| | 80.00 | .8080 | .3730 | -.0606 | -.2270 | .8605 |
| | 85.00 | .7825 | .3330 | -.0618 | -.2635 | .8085 |
| | 90.00 | .7538 | .2783 | -.0622 | -.2783 | .7538 |
| | 95.00 | .7187 | .2468 | -.0561 | -.3085 | .6945 |
| | 100.00 | .6676 | .1722 | -.0558 | -.2855 | .6276 |
| | 103.00 | .6341 | .1047 | -.0557 | -.2446 | .5942 |
| | 76.00 | .8104 | .3968 | -.0603 | -.1889 | .8823 |
| | 80.00 | .7936 | .3734 | -.0609 | -.2299 | .8463 |
| | 85.00 | .7677 | .3324 | -.0606 | -.2642 | .7938 |
| | 90.00 | .7364 | .2845 | -.0586 | -.2845 | .7364 |
| | 95.00 | .7019 | .2354 | -.0553 | -.2957 | .6787 |
| | 100.00 | .6558 | .1597 | -.0548 | -.2712 | .6181 |
| | 105.00 | .6014 | .0382 | -.0560 | -.1926 | .5710 |
| | 110.00 | .5466 | -.1134 | -.0522 | -.0803 | .5524 |
| | 115.00 | .4788 | -.3029 | -.0464 | .0721 | .5619 |
| | 118.00 | .4375 | -.4243 | -.0423 | .1692 | .5855 |
| | 120.00 | .3766 | -.4611 | -.0788 | .2110 | .5567 |
| | 125.00 | .2994 | -.6933 | -.0582 | .3962 | .6430 |
| | 130.00 | .2096 | -.9425 | -.0465 | .5873 | .7664 |
| | 135.00 | .1539 | -1.1823 | -.0300 | .7272 | .9448 |
| | 140.00 | .1072 | -1.3547 | -.0135 | .7887 | 1.1067 |
| | 145.00 | .0733 | -1.4819 | -.0123 | .7900 | 1.2559 |
| | 150.00 | .0486 | -1.5775 | .0021 | .7467 | 1.3904 |
| | 155.00 | .0315 | -1.6527 | .0068 | .6700 | 1.5112 |
| | 160.00 | .0154 | -1.7092 | .0070 | .5701 | 1.6114 |
| 3232 | 61.00 | .8825 | .5016 | -.0500 | -.0109 | 1.0151 |
| | 65.00 | .8705 | .4713 | -.0536 | -.0592 | .9881 |
| | 70.00 | .8611 | .4355 | -.0549 | -.1147 | .9581 |
| | 75.00 | .8373 | .3965 | -.0561 | -.1663 | .9114 |
| | 80.00 | .8225 | .3553 | -.0557 | -.2071 | .8717 |
| | 85.00 | .8070 | .3110 | -.0524 | -.2395 | .8310 |
| | 90.00 | .7810 | .2569 | -.0498 | -.2569 | .7810 |
| | 95.00 | .7554 | .1870 | -.0408 | -.2521 | .7362 |
| | 100.00 | .7182 | .0994 | -.0306 | -.2226 | .6900 |
| | 103.00 | .6896 | .0341 | -.0228 | -.1883 | .6642 |
| | 76.00 | .8120 | .3875 | -.0563 | -.1796 | .8816 |
| | 80.00 | .8023 | .3516 | -.0557 | -.2070 | .8512 |
| | 85.00 | .7826 | .3076 | -.0528 | -.2382 | .8064 |
| | 90.00 | .7579 | .2460 | -.0496 | -.2460 | .7579 |
| | 95.00 | .7277 | .1775 | -.0414 | -.2402 | .7094 |
| | 100.00 | .6908 | .0924 | -.0301 | -.2110 | .6643 |
| | 105.00 | .6514 | -.0246 | -.0188 | -.1448 | .6356 |
| | 110.00 | .6066 | -.1552 | -.0040 | -.0617 | .6231 |
| | 115.00 | .5441 | -.2908 | .0102 | .0337 | .6160 |
| | 118.00 | .4997 | -.3827 | .0169 | .1033 | .6209 |
| | 120.00 | .4649 | -.3942 | -.0048 | .1089 | .5997 |
| | 125.00 | .3875 | -.5644 | .0175 | .2400 | .6411 |
| | 130.00 | .3120 | -.7431 | .0304 | .3686 | .7167 |
| | 135.00 | .2506 | -.8979 | .0392 | .4577 | .8121 |
| | 140.00 | .1970 | -1.0374 | .0296 | .5159 | .9213 |
| | 145.00 | .1464 | -1.1720 | .0344 | .5523 | 1.0440 |
| | 150.00 | .1212 | -1.2929 | .0354 | .5415 | 1.1803 |
| | 155.00 | .0931 | -1.4040 | .0297 | .5090 | 1.3118 |
| | 160.00 | .0649 | -1.4929 | .0226 | .4496 | 1.4251 |

TABLE I. - AERODYNAMIC CHARACTERISTICS OF MODELS - Concluded

$M_\infty = 6.0$

| Configuration | α, deg | $C_N$ | $C_A$ | $C_m$ | $C_L$ | $C_D$ |
|---|---|---|---|---|---|---|
| 3233 | 61.00 | .8860 | .5029 | -.0481 | -.0103 | 1.0187 |
| | 65.00 | .8787 | .4818 | -.0503 | -.0653 | 1.0000 |
| | 70.00 | .8617 | .4444 | -.0564 | -.1229 | .9617 |
| | 75.00 | .8418 | .4115 | -.0631 | -.1796 | .9196 |
| | 80.00 | .8542 | .3724 | -.0686 | -.2218 | .8862 |
| | 85.00 | .8059 | .3291 | -.0739 | -.2576 | .8315 |
| | 90.00 | .7730 | .2847 | -.0771 | -.2847 | .7730 |
| | 95.00 | .7462 | .2344 | -.0789 | -.2985 | .7230 |
| | 100.00 | .7137 | .1389 | -.0933 | -.2607 | .6788 |
| | 103.00 | .6839 | -.0053 | -.1220 | -.1486 | .6676 |
| | 76.00 | .8202 | .3977 | -.0653 | -.1875 | .8920 |
| | 80.00 | .8073 | .3550 | -.0728 | -.2094 | .8566 |
| | 85.00 | .7830 | .3113 | -.0783 | -.2419 | .8071 |
| | 90.00 | .7506 | .2718 | -.0783 | -.2718 | .7506 |
| | 95.00 | .7170 | .2159 | -.0801 | -.2776 | .6955 |
| | 100.00 | .6809 | .1262 | -.0944 | -.2425 | .6487 |
| | 105.00 | .6538 | -.0394 | -.1257 | -.1311 | .6417 |
| | 110.00 | .6304 | -.2668 | -.1640 | .0351 | .6837 |
| | 115.00 | .5759 | -.4741 | -.1747 | .1863 | .7223 |
| | 118.00 | .5600 | -.6860 | -.2103 | .3428 | .8166 |
| | 120.00 | .5339 | -.7428 | -.2543 | .3763 | .8338 |
| | 125.00 | .4422 | -1.0229 | -.2396 | .5843 | .9489 |
| | 130.00 | .3487 | -1.2517 | -.1831 | .7348 | 1.0717 |
| | 135.00 | .2298 | -1.3874 | -.1036 | .8185 | 1.1435 |
| | 140.00 | .1535 | -1.5705 | -.0647 | .8919 | 1.3018 |
| | 145.00 | .0794 | -1.6236 | -.0031 | .8663 | 1.3755 |
| | 150.00 | .0362 | -1.6644 | .0077 | .8009 | 1.4595 |
| | 155.00 | .0239 | -1.7101 | .0154 | .7010 | 1.5600 |
| | 160.00 | .0078 | -1.7480 | .0167 | .5906 | 1.6453 |
| 1331 | -5.00 | -.1201 | .3533 | .0109 | -.0888 | .3625 |
| | -3.00 | -.0697 | .3502 | .0055 | -.0513 | .3533 |
| | -1.00 | -.0180 | .3427 | .0014 | -.0120 | .3429 |
| | .00 | .0060 | .3425 | -.0008 | .0060 | .3425 |
| | 1.00 | .0338 | .3423 | -.0043 | .0278 | .3428 |
| | 3.00 | .0854 | .3543 | -.0107 | .0668 | .3583 |
| | 5.00 | .1424 | .3545 | -.0184 | .1110 | .3656 |
| | 10.00 | .2722 | .3793 | -.0296 | .2022 | .4208 |
| | 15.00 | .3963 | .4051 | -.0384 | .2780 | .4939 |
| | 20.00 | .5140 | .4419 | -.0455 | .3319 | .5910 |
| | 25.00 | .6378 | .4720 | -.0568 | .3785 | .6973 |
| | 16.00 | .4229 | .4177 | -.0405 | .2914 | .5181 |
| | 20.00 | .5182 | .4399 | -.0457 | .3364 | .5906 |
| | 25.00 | .6331 | .4613 | -.0515 | .3788 | .6857 |
| | 30.00 | .7356 | .4856 | -.0583 | .3942 | .7883 |
| | 35.00 | .8346 | .5093 | -.0670 | .3916 | .8959 |
| | 40.00 | .9133 | .5233 | -.0738 | .3632 | .9880 |
| | 45.00 | .9701 | .5294 | -.0736 | .3117 | 1.0603 |
| | 50.00 | 1.0048 | .5306 | -.0766 | .2394 | 1.1108 |
| | 55.00 | 1.0230 | .5298 | -.0767 | .1528 | 1.1419 |
| | 60.00 | 1.0360 | .5170 | -.0825 | .0703 | 1.1557 |
| | 61.00 | 1.0259 | .5254 | -.0568 | .0379 | 1.1520 |
| | 65.00 | 1.0241 | .5167 | -.0592 | -.0355 | 1.1466 |
| | 70.00 | 1.0143 | .4957 | -.0644 | -.1189 | 1.1226 |
| | 75.00 | .9960 | .4726 | -.0698 | -.1987 | 1.0844 |
| | 80.00 | .9695 | .4390 | -.0742 | -.2639 | 1.0310 |
| | 85.00 | .9398 | .3966 | -.0766 | -.3132 | .9708 |
| | 90.00 | .8988 | .3527 | -.0762 | -.3527 | .8988 |
| | 95.00 | .8478 | .2975 | -.0753 | -.3703 | .8187 |
| | 100.00 | .7838 | .2146 | -.0743 | -.3474 | .7346 |
| | 103.00 | .7440 | .1448 | -.0746 | -.3085 | .6923 |
| | 76.00 | .9782 | .4578 | -.0751 | -.2076 | 1.0599 |
| | 80.00 | .9586 | .4275 | -.0790 | -.2545 | 1.0182 |
| | 85.00 | .9229 | .3948 | -.0778 | -.3129 | .9538 |
| | 90.00 | .8852 | .3411 | -.0782 | -.3411 | .8852 |
| | 95.00 | .8353 | .2864 | -.0762 | -.3581 | .8071 |
| | 100.00 | .7730 | .2035 | -.0752 | -.3346 | .7260 |
| | 105.00 | .7020 | .0766 | -.0755 | -.2557 | .6583 |
| | 110.00 | .6367 | -.0845 | -.0717 | -.1384 | .6272 |
| | 115.00 | .5576 | -.2846 | -.0659 | .0222 | .6257 |
| | 118.00 | .5061 | -.4176 | -.0606 | .1311 | .6430 |
| | 121.00 | .4487 | -.4607 | -.0635 | .1638 | .6219 |
| | 125.00 | .3757 | -.6536 | -.0437 | .3199 | .6827 |
| | 130.00 | .2900 | -.8802 | -.0254 | .4879 | .7880 |
| | 135.00 | .2065 | -1.0926 | -.0122 | .6266 | .9186 |
| | 140.00 | .1421 | -1.2598 | .0033 | .7009 | 1.0564 |
| | 145.00 | .1038 | -1.3843 | .0116 | .7090 | 1.1934 |
| | 150.00 | .0662 | -1.4856 | .0215 | .6855 | 1.3197 |
| | 155.00 | .0511 | -1.5521 | .0255 | .6096 | 1.4283 |
| | 160.00 | .0331 | -1.6045 | .0248 | .5177 | 1.5190 |
| | 162.70 | .0272 | -1.6308 | .0249 | .4590 | 1.5651 |
| | 151.00 | .0550 | -1.5600 | .0174 | .7082 | 1.3911 |
| | 155.00 | .0452 | -1.6044 | .0248 | .6371 | 1.4732 |
| | 160.00 | .0326 | -1.6610 | .0247 | .5375 | 1.5719 |
| | 165.00 | .0135 | -1.7124 | .0211 | .4302 | 1.6576 |
| | 170.00 | .0032 | -1.7282 | .0159 | .2969 | 1.7025 |
| | 175.00 | -.0072 | -1.7494 | .0087 | .1597 | 1.7422 |
| | 177.00 | -.0099 | -1.7493 | .0060 | .1015 | 1.7464 |
| | 179.00 | -.0088 | -1.7607 | .0027 | .0395 | 1.7602 |
| | 180.00 | -.0102 | -1.7639 | -.0007 | .0102 | 1.7639 |
| | 181.00 | -.0078 | -1.7637 | -.0032 | -.0230 | 1.7635 |
| | 183.00 | -.0080 | -1.7638 | -.0070 | -.0843 | 1.7618 |
| | 185.00 | -.0133 | -1.7605 | -.0109 | -.1402 | 1.7550 |

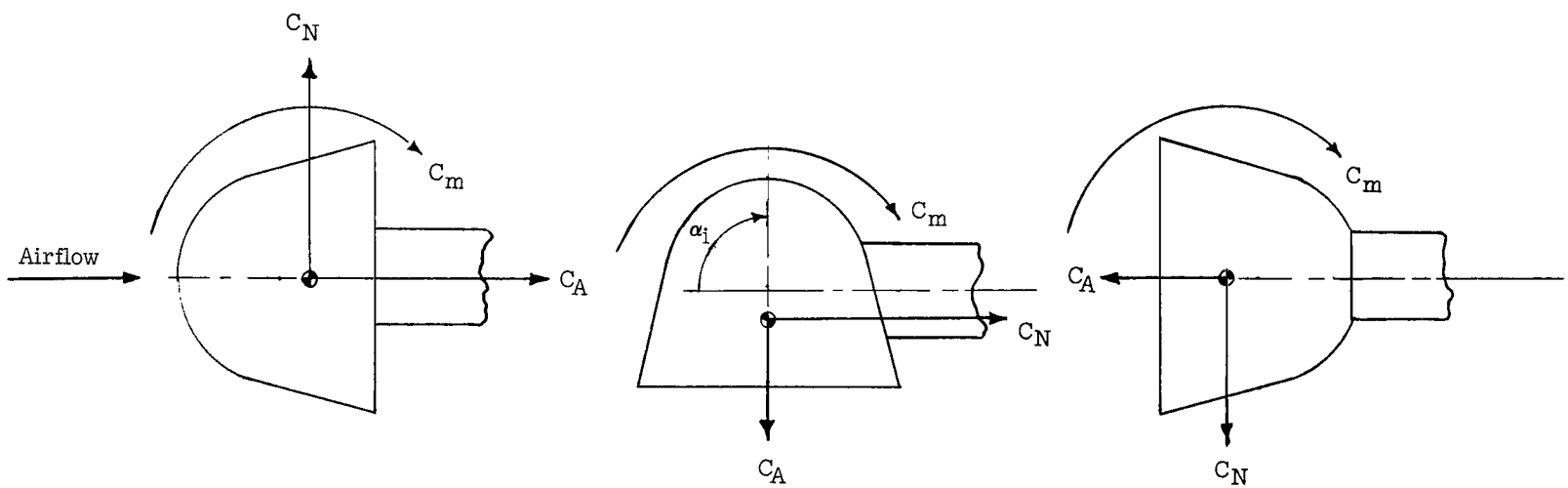


$\alpha_i = 0^\circ$

$-5^\circ \leqq \alpha \leqq 50^\circ$

$\alpha_i = 90^\circ$

$45^\circ \leqq \alpha \leqq 140^\circ$

$\alpha_i = 180^\circ$

$135^\circ \leqq \alpha \leqq 185^\circ$

Figure 1.- Model mounting positions and body-axis system. (Arrows indicate positive directions.)

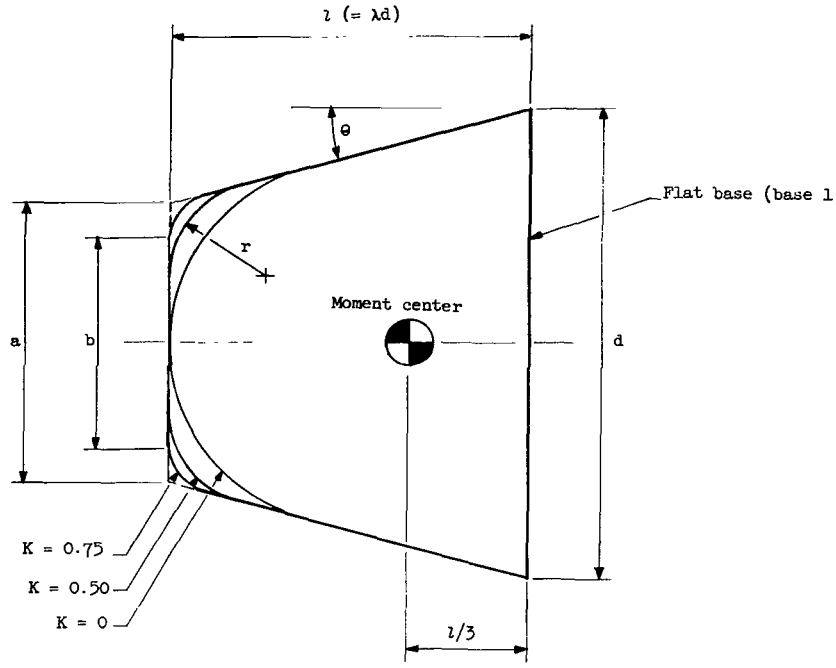


| Model | K | λ | θ, deg | $\frac{a}{d}$ | $\frac{r}{d}$ |
|---|---|---|---|---|---|
| 111x* | 0 | 0.50 | 10 | 0.824 | 0.491 |
| 121x | 0 | 0.75 | 10 | 0.736 | 0.438 |
| 221x | .50 | .75 | 10 | .736 | .219 |
| 321x | .75 | .75 | 10 | .736 | .110 |
| 131x* | 0 | 1.00 | 10 | 0.647 | 0.386 |
| 112x | 0 | 0.50 | 15 | 0.732 | 0.477 |
| 212x | .50 | .50 | 15 | .732 | .239 |
| 312x | .75 | .50 | 15 | .732 | .119 |
| 122x | 0 | 0.75 | 15 | 0.598 | 0.390 |
| 222x | .50 | .75 | 15 | .598 | .195 |
| 322x | .75 | .75 | 15 | .598 | .097 |
| 132x | 0 | 1.00 | 15 | 0.464 | 0.302 |
| 232x | .50 | 1.00 | 15 | .464 | .151 |
| 332x | .75 | 1.00 | 15 | .464 | .076 |
| 113x* | 0 | 0.50 | 20 | 0.636 | 0.454 |
| 123x | 0 | 0.75 | 20 | 0.454 | 0.324 |
| 223x | .50 | .75 | 20 | .454 | .162 |
| 323x | .75 | .75 | 20 | .454 | .081 |
| 133x* | 0 | 1.00 | 20 | 0.272 | 0.194 |

*These models were tested with flat base only; all others were tested with flat, convex, concave, or conical base. The letter x indicates base shape which did not affect dimensions of basic model.

(a) Sketch of model showing nose shapes, flat base, and dimensions.

Figure 2.- Model sketches and dimensions. ($d = 4$ inches except for models 111x, 112x, 212x, 312x, and 113x for which $d = 6$ inches for the $\alpha_i = 90^\circ$ position.)

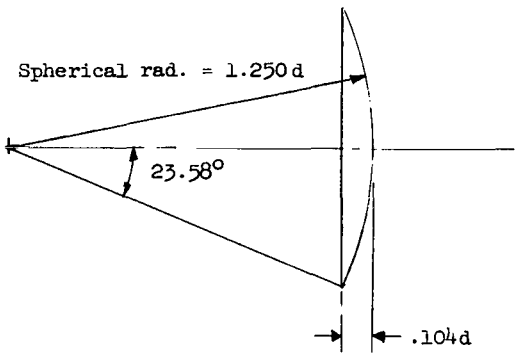


23.58° Convex (base 2)

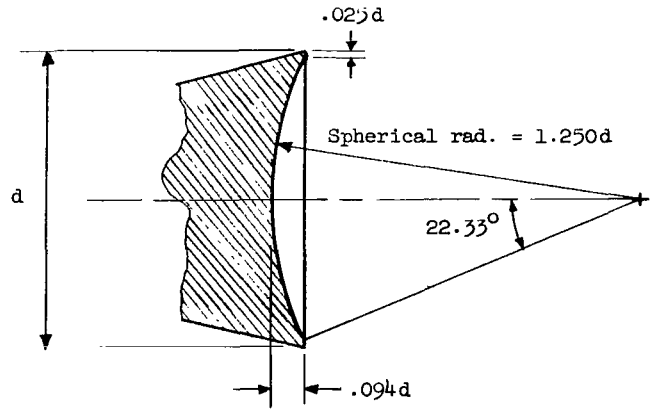


Concave (base 3)

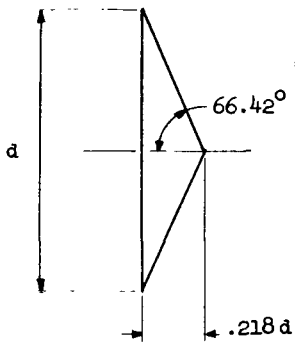


66.42° Cone* (base 4)

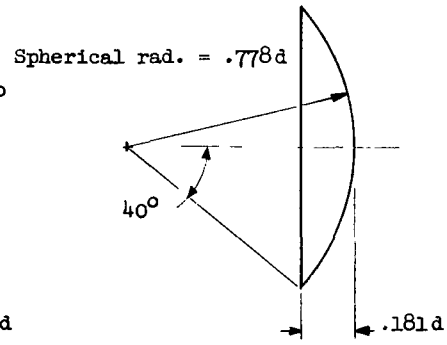


40° Convex* (base 5)

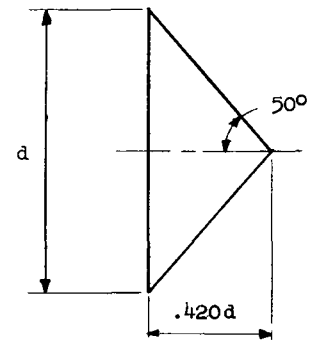


50° Cone* (base 6)

*Tested on configurations 132x and 332x at $M_\infty = 6.0$ only

(b) Base shapes.

Figure 2.- Concluded.

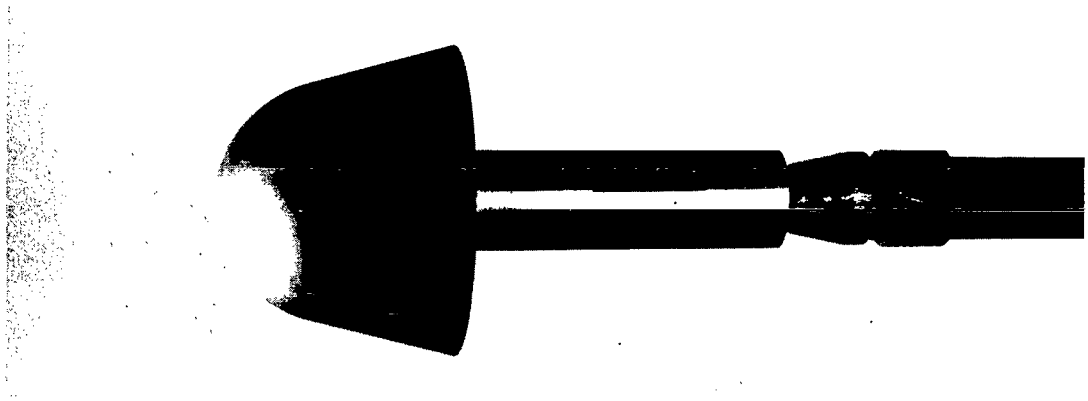

(a) $\alpha_i = 0^\circ$.

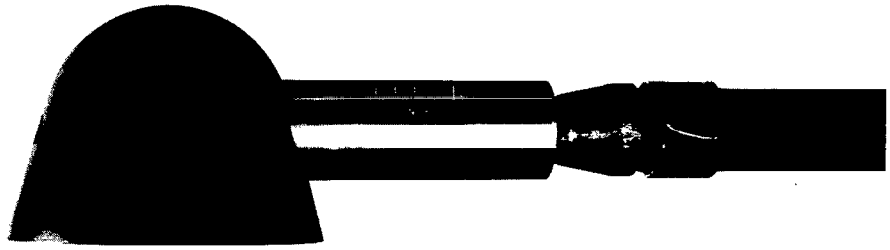

(b) $\alpha_i = 90^\circ$.

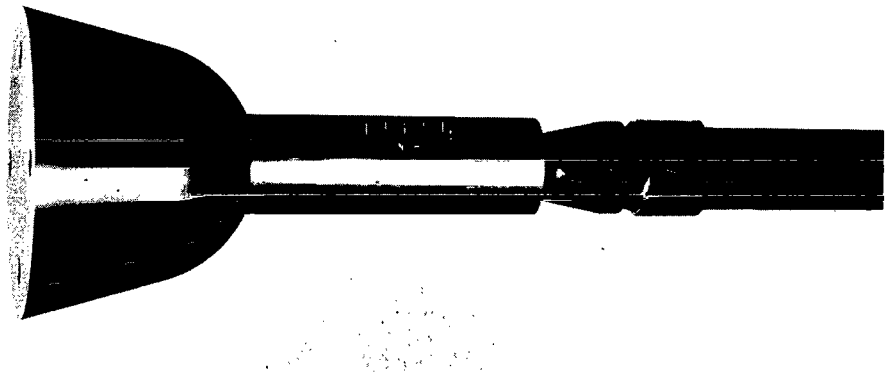

(c) $\alpha_i = 180^\circ$. L-63-9251

Figure 3.- Model 1221 mounted in three positions.

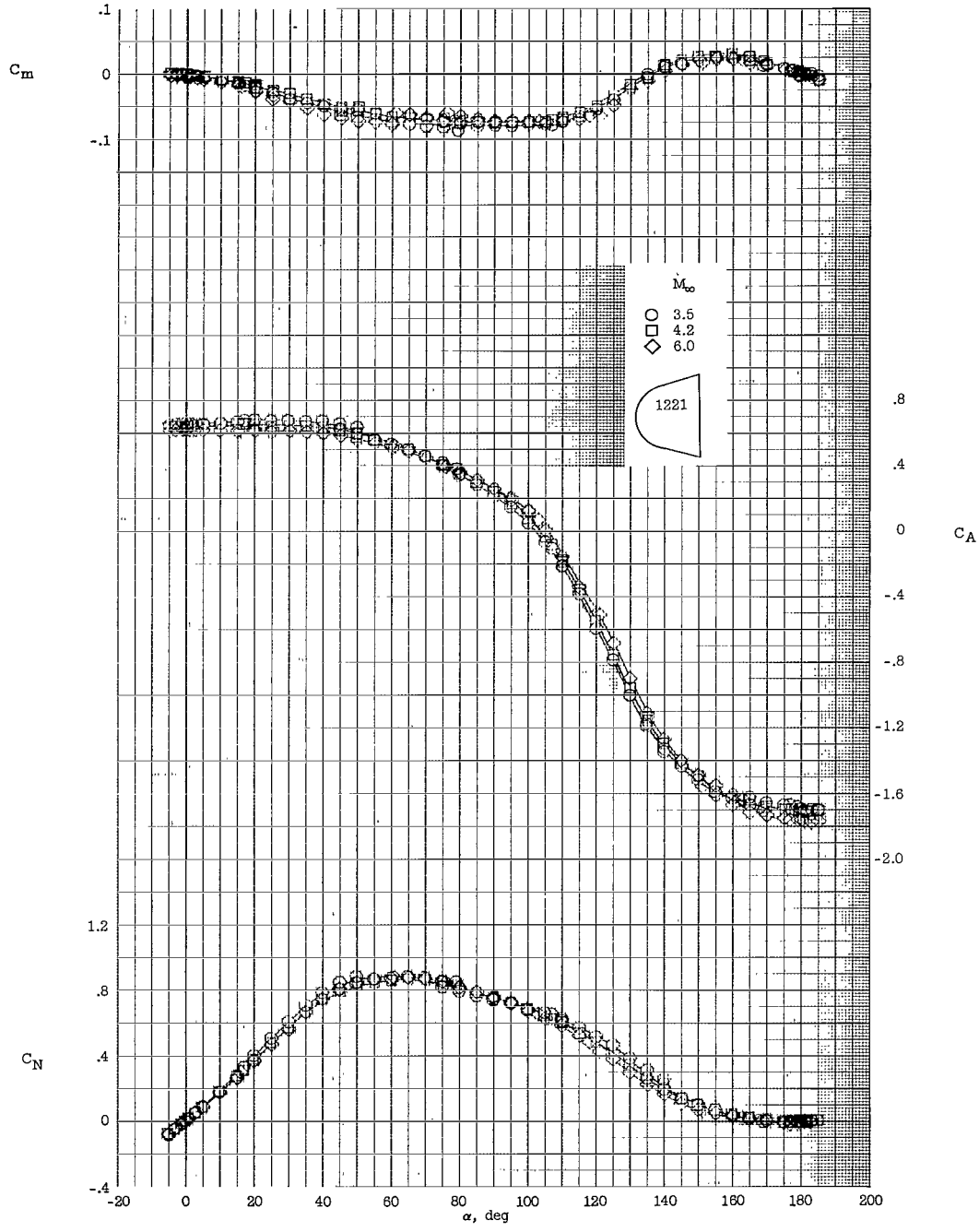


(a) Variation of $C_m$, $C_A$, and $C_N$ with $\alpha$.

Figure 4.- Effect of Mach number on the longitudinal aerodynamic characteristics of configuration 1221. $\left(\text{Moment center at } \frac{2}{3}\, l \text{ from nose of forebody.}\right)$

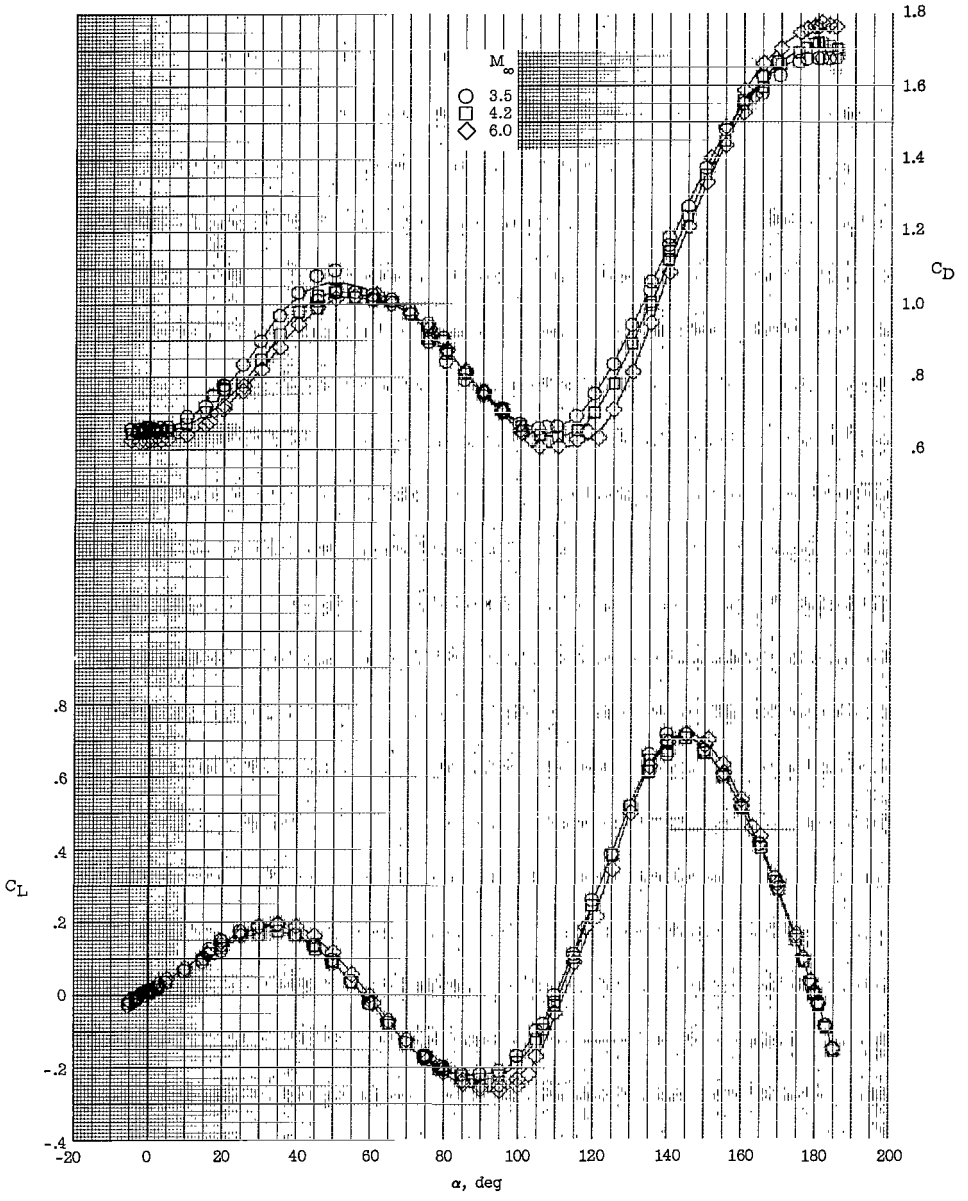


(b) Variation of $C_D$ and $C_L$ with α.

Figure 4.- Concluded.

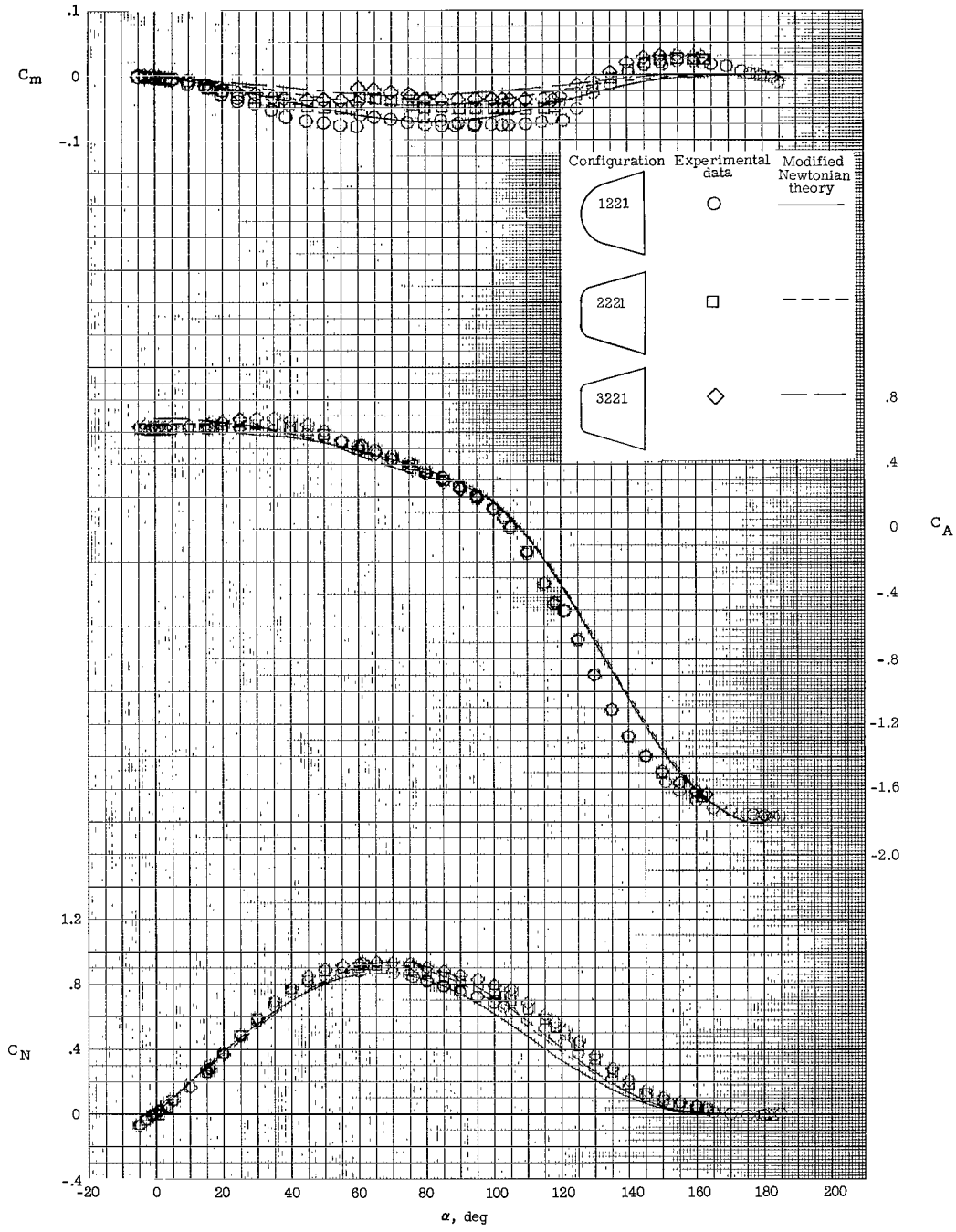


(a) Variation of $C_m$, $C_A$, and $C_N$ with $\alpha$.

Figure 5.- Effect of nose bluntness on the longitudinal aerodynamic characteristics. $M_\infty = 6.0$. $\left(\text{Moment center at } \frac{2}{3}\, l \text{ from nose of forebody.}\right)$

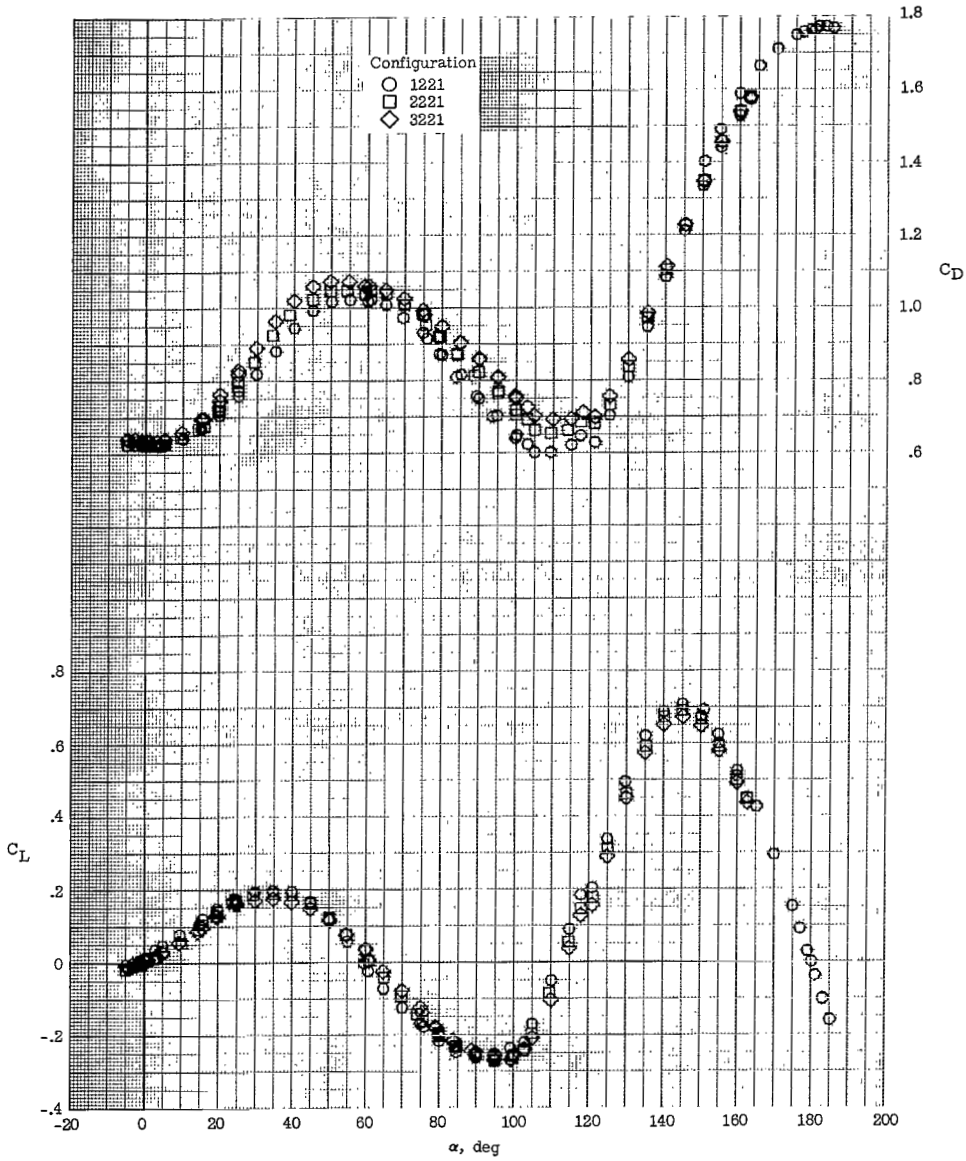


(b) Variation of $C_D$ and $C_L$ with α.

Figure 5.- Concluded.

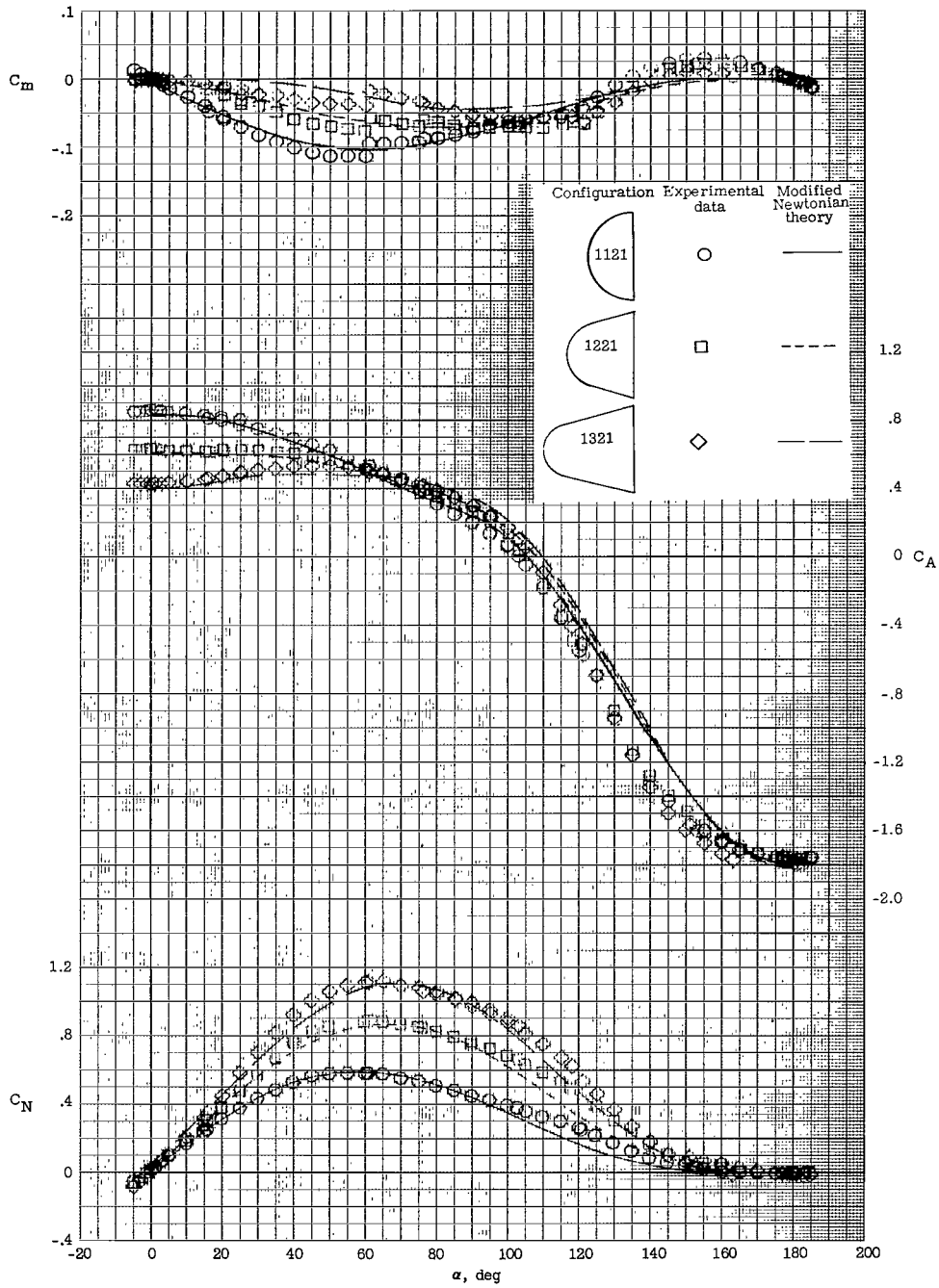


(a) Variation of $C_m$, $C_A$, and $C_N$ with $\alpha$.

Figure 6.- Effect of fineness ratio on the longitudinal aerodynamic characteristics. $M_\infty = 6.0$. $\left(\text{Moment center at } \frac{2}{3}\, l \text{ from nose of forebody.}\right)$

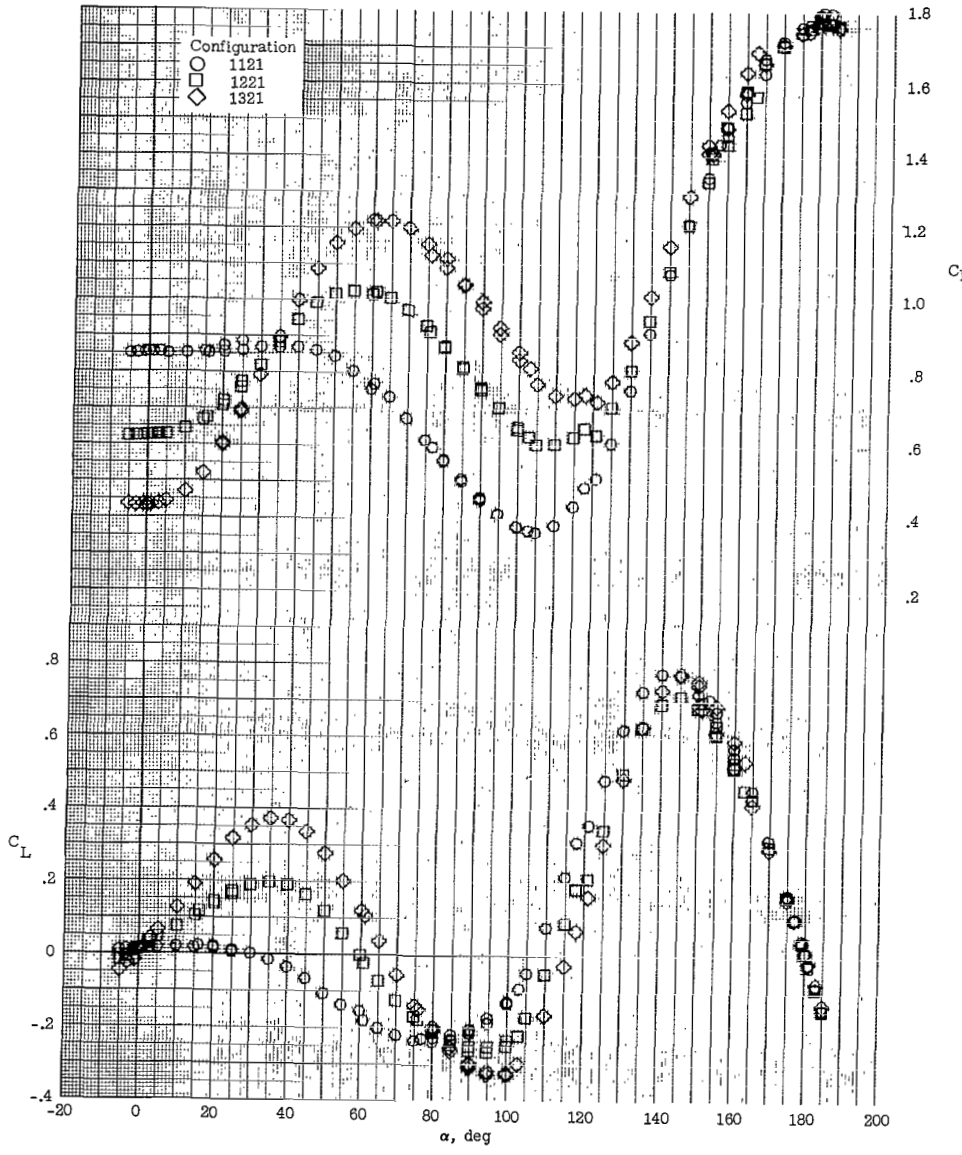


(b) Variation of $C_D$ and $C_L$ with α.

Figure 6.- Concluded.

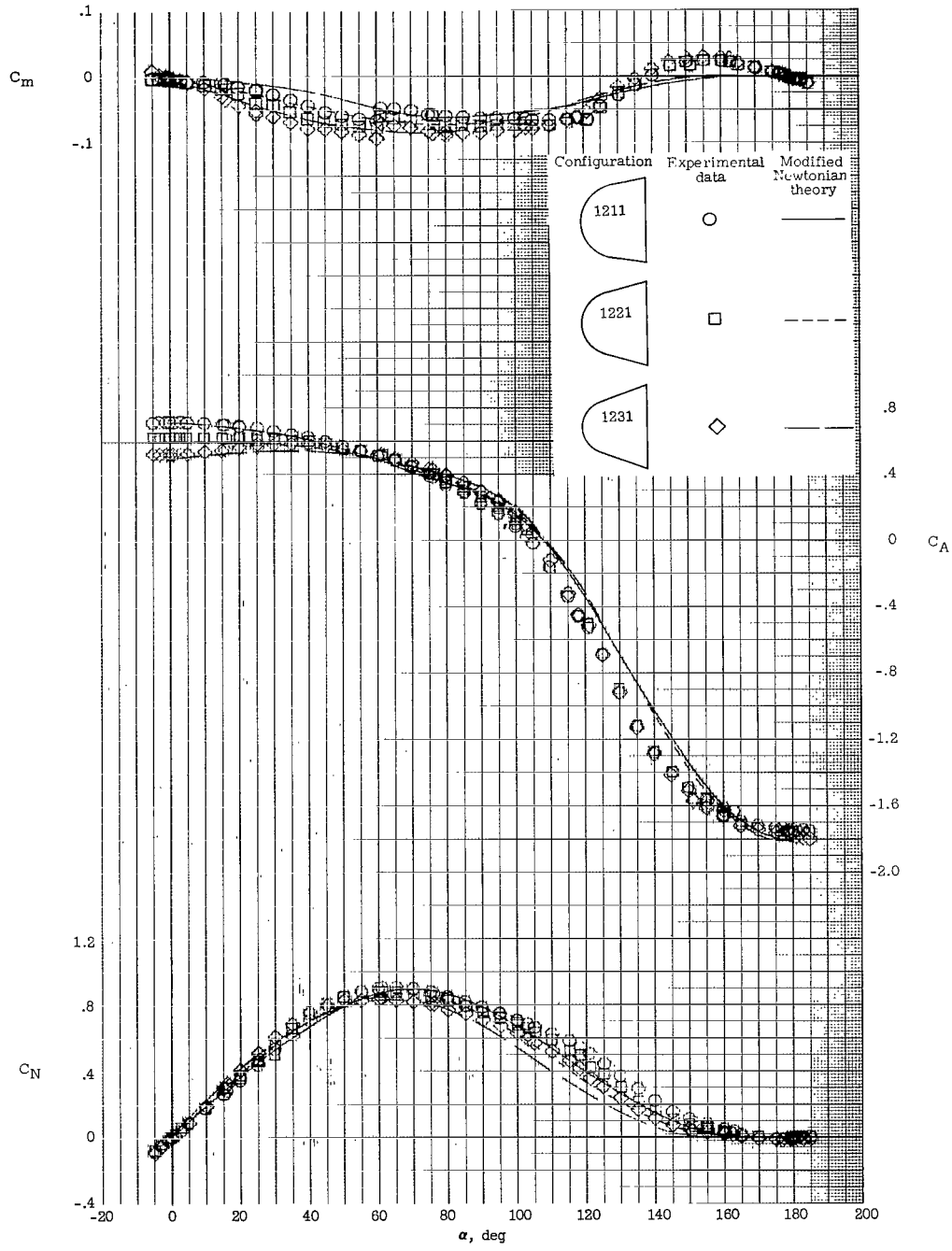


(a) Variation of $C_m$, $C_A$, and $C_N$ with $\alpha$.

Figure 7.- Effect of cone half-angle on the longitudinal aerodynamic characteristics. $M_\infty = 6.0$. $\left(\text{Moment center at } \frac{2}{3} l \text{ from nose of forebody.}\right)$

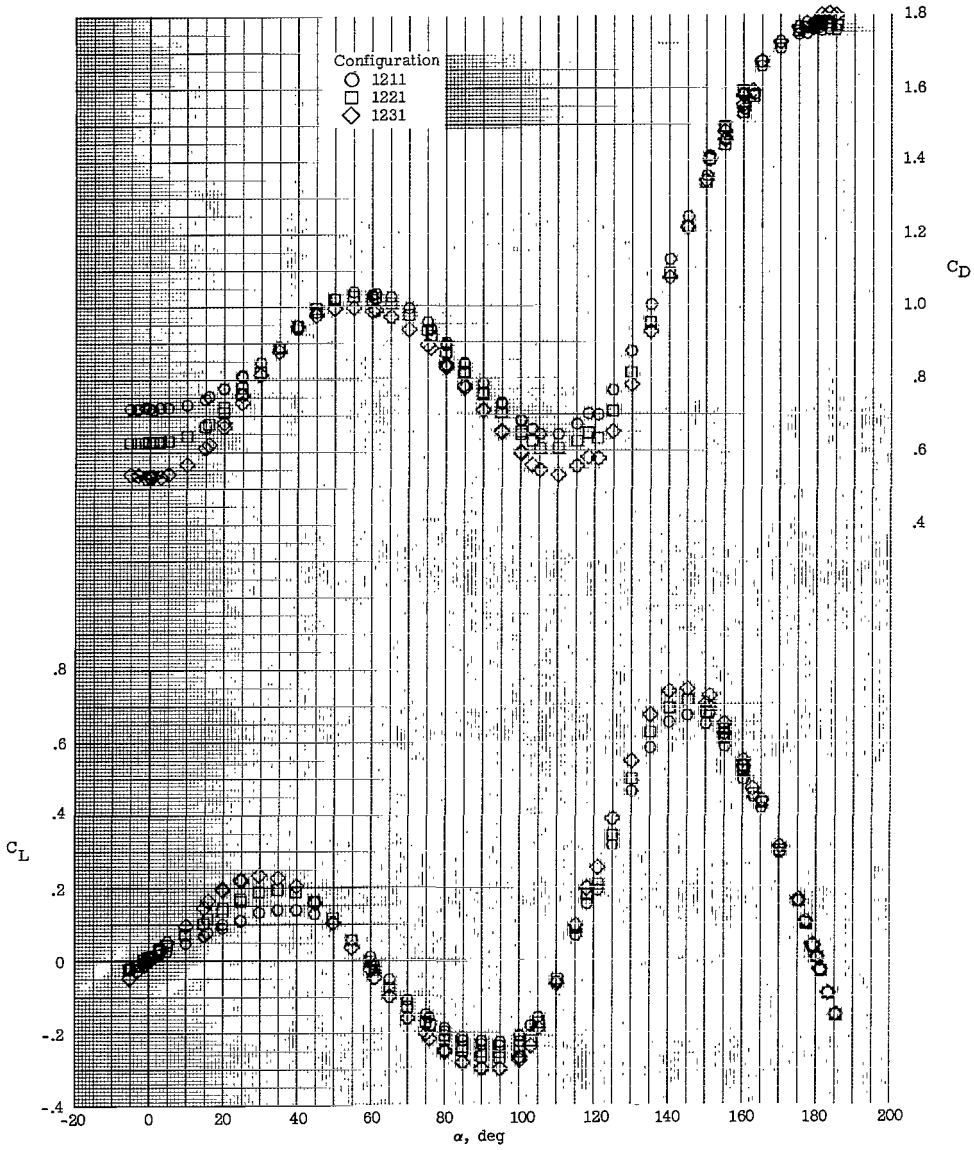


(b) Variation of $C_D$ and $C_L$ with α.

Figure 7.- Concluded.

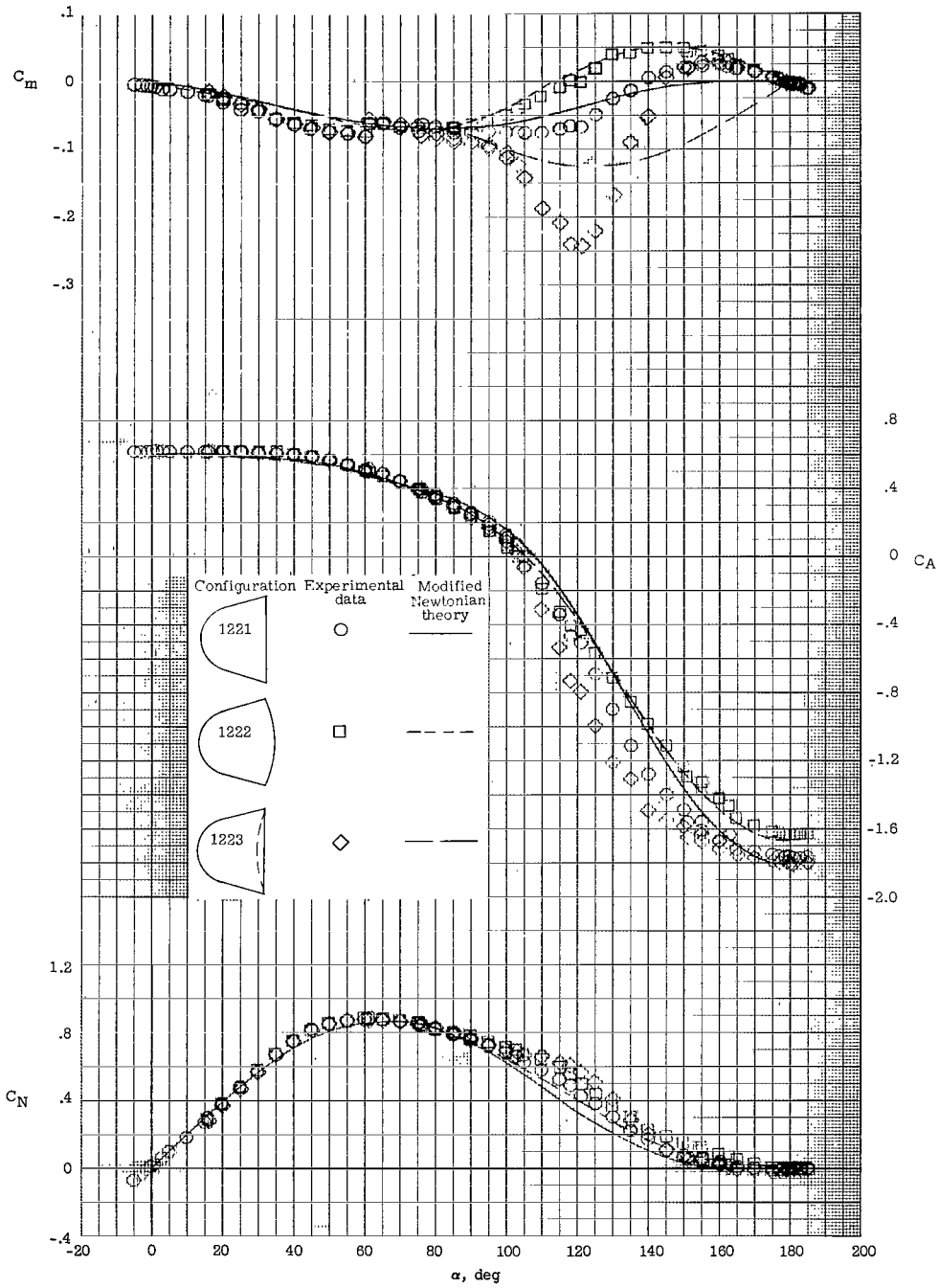


(a) Variation of $C_m$, $C_A$, and $C_N$ with $\alpha$.

Figure 8.- Effect of base shape on the longitudinal aerodynamic characteristics. $M_\infty = 6.0$. $\left(\text{Moment center at } \frac{2}{3} l \text{ from nose of forebody.}\right)$

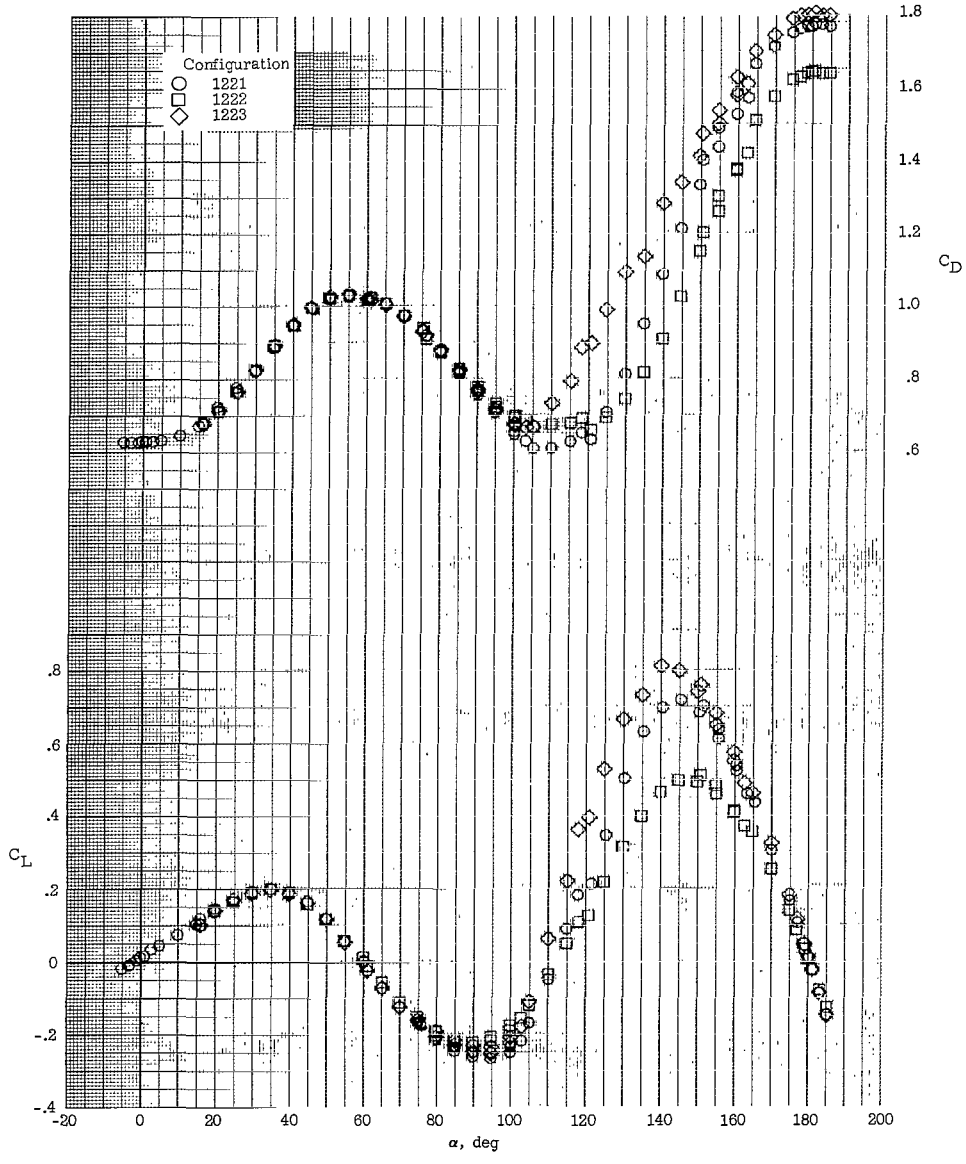


(b) Variation of $C_D$ and $C_L$ with $\alpha$.

Figure 8.- Concluded.

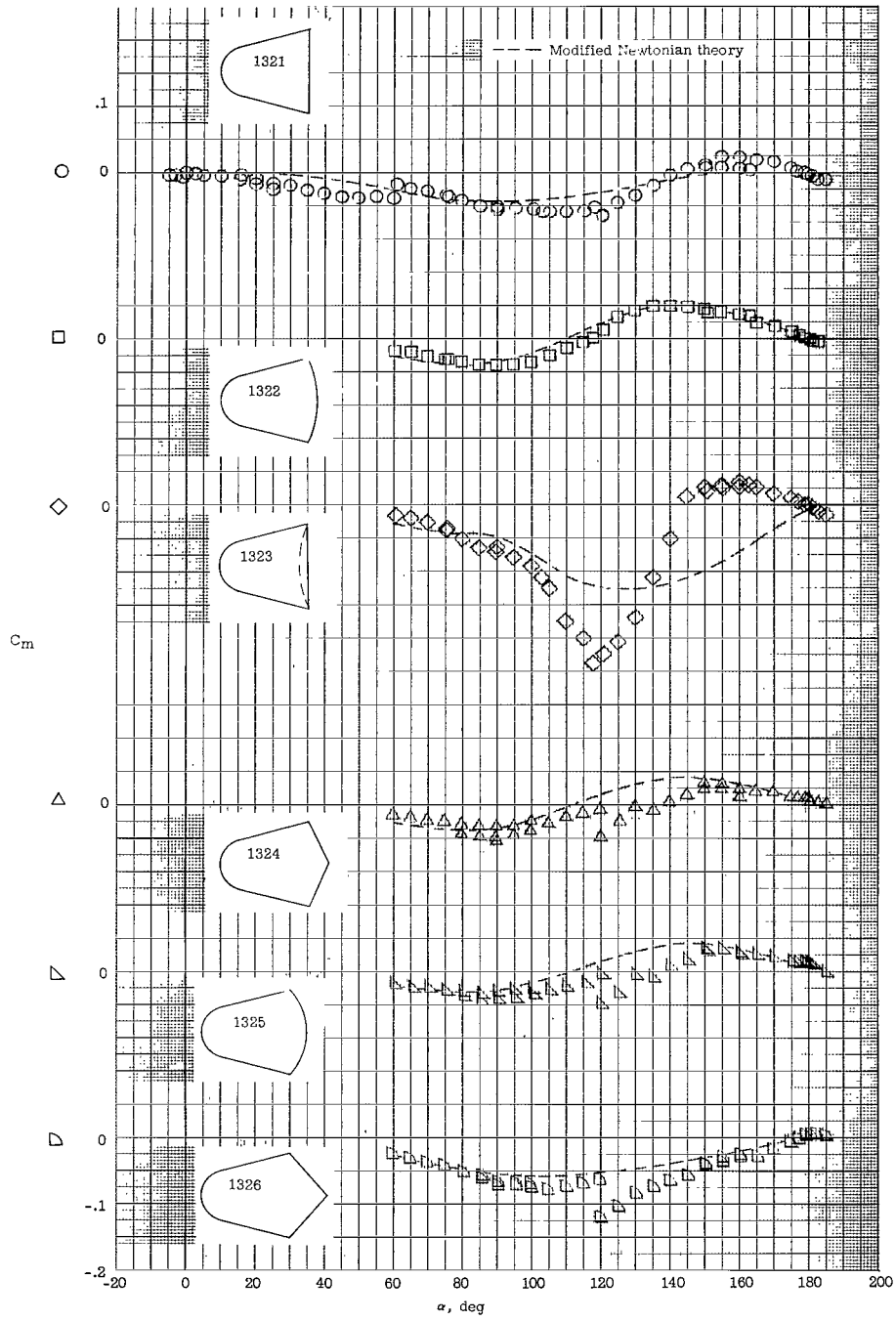


(a) Moment center at $\frac{2}{3}\,l$ from nose of forebody.

Figure 9.- Effect of base shape on the pitching-moment characteristics of configuration 132x. $M_\infty = 6.0$.

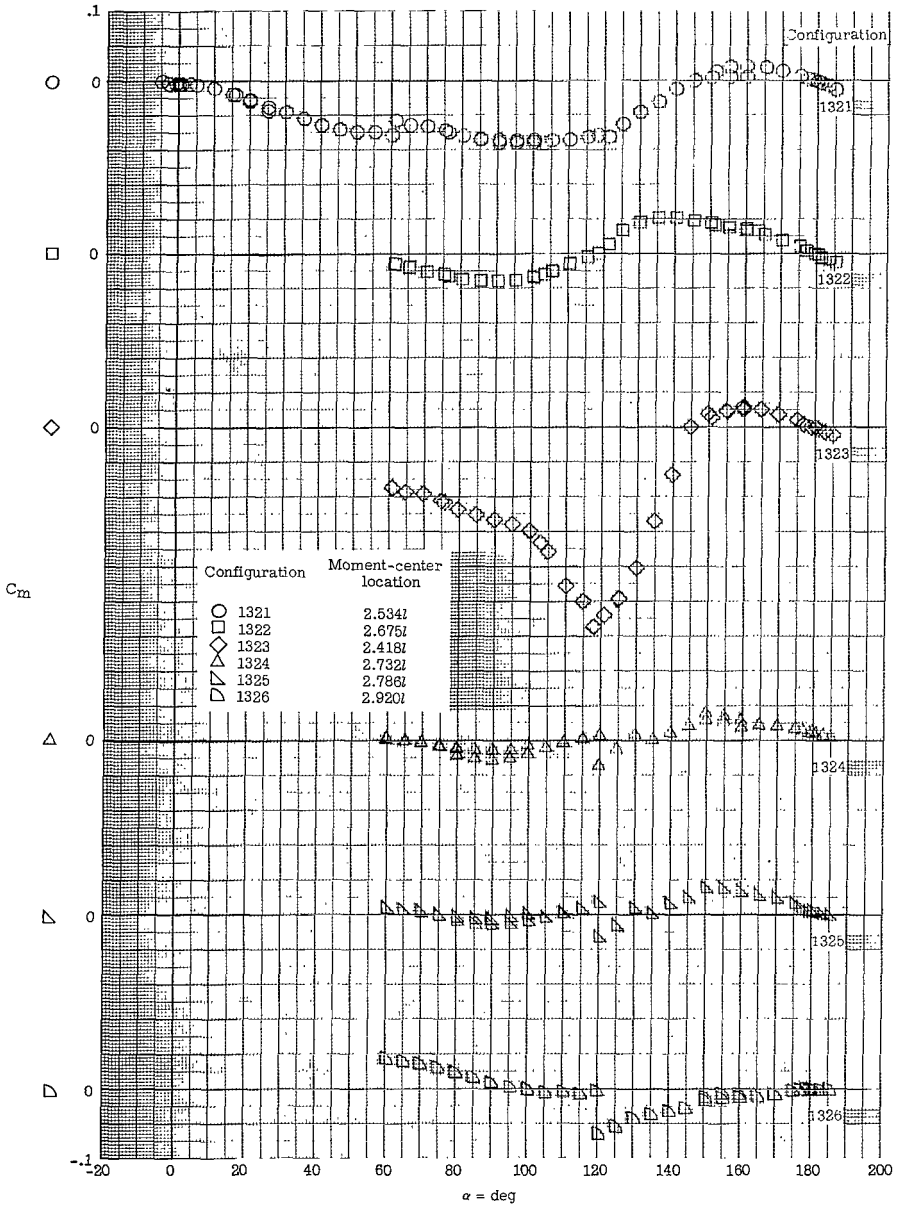


(b) Moment center at center of volume of configuration.

Figure 9.- Concluded.



NASA-Langley, 1964 L-3739