T

49p

N64-15872
code 1
CR 55-732

ITT Federal LABORATORIES
FORT WAYNE, INDIANA

SUMMARY REPORT

VOLUME II

ORBITAL LAUNCH ERROR ANALYSIS AND DEVELOPMENT OF A STAR SENSING SYSTEM SUITABLE FOR INERTIAL PLATFORM ALIGNMENT

OTS PRICE

XEROX $ 4.60 ph

MICROFILM $ 1.67 mf

A DIVISION OF INTERNATIONAL TELEPHONE AND TELEGRAPH CORPORATION

3301 Wayne Trace
Fort Wayne 1,
Indiana

ITT Federal LABORATORIES

Clifton
Fort Wayne
Nutley
Palo Alto
San Fernando

Serial No. 3275

May 29, 1963

ORBITAL LAUNCH ERROR ANALYSIS AND DEVELOPMENT OF A STAR SENSING SYSTEM SUITABLE FOR INERTIAL PLATFORM ALIGNMENT

VOLUME II

~~Summary Report~~
of
Contract ~~No.~~ NAS 8-5001
RFP No. TP 2-83-1228

Prepared by

The Astrionics Center
ITT Federal Laboratories
~~3700 E. Pontiac St.~~
Fort Wayne, Indiana

for

George C. Marshall Space Flight Center
Huntsville, Alabama

CONTENTS - VOLUME II

		Page
1.0	INTRODUCTION	1
2.0	BREADBOARD DEVELOPMENT SUMMARY	1
2.1	Description and Performance	1
2.2	Alignment Instrument Improvements	4
2.2.1	Currently Available Improvements	4
2.2.2	Future Star Sensor Improvements	5
3.0	ALIGNMENT INSTRUMENT DISCUSSION	6
3.1	Operational Description	6
3.1.1	Sensor Package	8
3.1.2	Video Amplifier and High Voltage Supply	8
3.1.3	Electronics Unit	8
3.2	Operational Theory	10
3.2.1	Optical Unit Electronics	10
3.2.2	Electronics Unit	13
3.3	Electrical Alignment Procedures	35
3.3.1	Acquisition Sweep	35
3.3.2	Track Sweep	35
3.3.3	Switchover Tracking Gates	35
3.3.4	Amplifier Threshold Adjustment	38
3.3.5	Mounting Boresight Alignment	38
4.0	TEST RESULTS	38
4.1	Simulated Star Source	39
4.2	Measured Fields of View	39
4.3	Acquisition Mode Error Voltages	39
4.4	Track Mode Error Voltages	39
4.5	Tracking Accuracy and Signal-to-Noise Ratios	45

1.0 INTRODUCTION

This document is Volume II of the Summary Report for the NASA Marshall Space Flight Center Contract No. NAS 8-5001. Whereas Volume I of the Summary Report is devoted primarily to a detailed discussion of the analytical aspects of the program, Volume II is devoted to a detailed description of the Alignment Instrument Breadboard developed and delivered to MSFC as part of this program.

The physical and performance characteristics of the developed breadboard are summarized in Section 2.0, along with a brief discussion of improvements currently available. Section 3.0 presents a discussion of the physical description, theory of operation and electrical alignment procedures of the breadboard system. The results obtained in laboratory tests performed with the breadboard are discussed in Section 4.0.

2.0 BREADBOARD DEVELOPMENT SUMMARY

A breadboard of an instrument suitable for use as an attitude sensing component of an inertial platform alignment system was designed, fabricated and tested. The physical and performance characteristics of the breadboard are summarized below. Possible improvements in the system are also briefly discussed.

2.1 Description and Performance

A photograph of the alignment instrument breadboard that was designed, fabricated and tested as part of this program is shown in Figure 1. The instrument, designated the Star Sensing System SSS116, consists of an electronics unit, a preamplifier, a high voltage supply and a sensor.

The sensor uses an ITT FW-130 multiplier phototube with an f/1.5 photographic lens 2 inches in diameter. By electronically scanning the photocathode, error signals are derived which indicate the deviation of the star from the optical axis of the sensor. The error signals thus generated are available as command signals to the platform servo system to constantly null the signal and to thereby accurately track the star.

The high voltage supply provides the potential required to accelerate the electron image through the multiplier section of the phototube, and the video amplifier provides the necessary amplification of the phototube output signals.

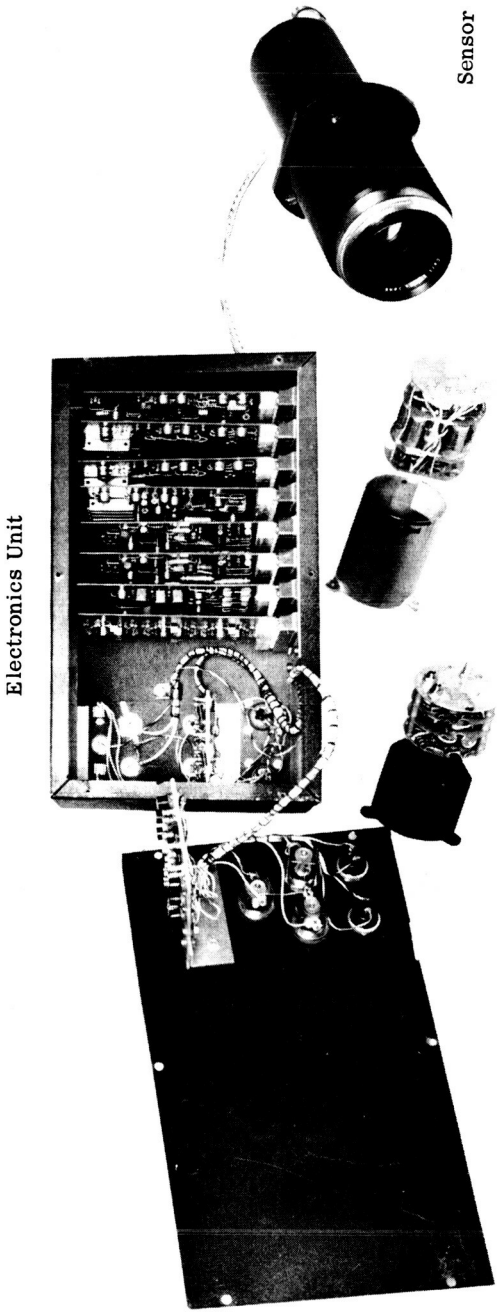

Figure 1 Alignment Instrument Breadboard

The electronics unit, which is to be mounted external to the platform, processes the video amplifier output to obtain the platform correction signals.

The performance characteristics of the sensing system are summarized below:

Acquisition field of view - 5° x 5°

Tracking field of view - 0.48^{o} (cross-scan)

FW-130 aperture diameter - 0.018 inches

Scan frequency (acquisition) - 1600 cps horizontal

Scan frequency (track) - 400 cps

Sensing capability - $+2.5^{M}$ star

Accuracy - 8 arc seconds

Maximum error voltage (50 K load) - ± 6 volts

Error voltage gradient - 0.4 volts per arc min

Error filter response bandwidth - 0.6 cps

Primary power requirements:

+ 28 v @ 250 ma, ± 0.5% reg. 5 mv ripple

-28 v @ 100 ma, ± 0.5% reg. 5 mv ripple

+ 10 v @ 75 ma, ± 0.5% reg. 5 mv ripple

-10 v @ 150 ma, ± 0.5% reg. 5 mv ripple

The above power requirements include those of the star tracker plus indicating lamps and a margin of safety and are not an indication of the total power required by the tracker alone. Power requirements for flight hardware will be substantially less.

2.2 Alignment Instrument Improvements

Since the design of the alignment instrument breadboard was firmly established and the unit was fabricated, other ITTFL star sensor development programs have resulted in sensor improvements which are currently available. These programs have also indicated areas in which further improvements appear promising. These currently available and future star sensor improvements are discussed briefly in following paragraphs.

2.2.1 Currently Available Improvements

The following paragraphs present information concerning currently available improvements and circuit changes which were developed through other company efforts subsequent to the fabrication and testing of the alignment instrument breadboard which was developed as part of the current program.

2.2.1.1 Automatic Tracking of the Brightest Star

During initial star acquisition, more than one star may possibly be present in the 5 x 5 degree acquisition field of view. In this situation, it is difficult to say which star will fall in the tracking gate and be tracked in the tracking mode. The incorporation of an agc-controlled pulse amplifier, recently developed and tested, corrects this situation.

This amplifier is capable of selecting and amplifying only the brightest star to a fixed reference level. All signals below this level are clipped and rejected to allow only video from the brightest star to appear at the amplifier output.

The amplifier is capable of making a selection between any two stars whose brightness differs by one visual magnitude. An additional benefit of this amplifier is the reduction of stray light and dark current noise interference by the agc action.

2.2.1.2 Automatic Initial Switching to Acquisition

When power is initially applied, the breadboard tracker described herein may come on in either the track or acquisition mode. This is due to the possibility of the mode control flip-flop assuming either of its two states when power is applied.

By the use of additional gating circuitry and using the star presence signal as a gate control signal rather than as the switchover trigger, a more positive operation can be achieved.

Thus, instead of using the loss of star presence signal transition to trigger the mode flip-flop, the loss of star presence signal is used to open a gate applying clock pulses to the mode flip-flop and causing the tracker to assume the acquisition mode automatically.

2.2.1.3 Circuit Simplifications

Basic changes in the method used to generate the track error voltages have been made. These changes replace the diode bridge, phase splitting stages, and 400 cps driver stages by logic gates. The same information is furnished to the balanced amplifier in either case.

The acquisition switchover gate and error generation circuits have also been simplified.

The above mentioned changes result in a component reduction of approximately 10 percent. A comparable power savings is also obtained.

2.2.2 Future Star Sensor Improvements

Efforts are continually being made to improve the ITTFL star sensors, and three of the more promising areas for successful development are discussed below.

Significant steps have been made toward reduction of the size of the ITTFL star sensor. A new multiplier phototube has been developed which is approximately 6 inches long and 1 inch in diameter. This represents a 2-to-1 reduction in the phototube diameter without significant increase in tube length. This new tube is currently under test and, if successful, will be available in the near future for application to star-tracker development.

The alignment instrument breadboard developed and delivered as part of this program utilized an "off-the-shelf" photographic lens as its optical system. The sensing capability could be considerably increased from the $+2.5^M$ star by the use of especially developed optical components which have a wider spectral bandwidth than the lens system which was used. On the other hand, coupling such special optics with the new small multiplier phototube should provide the capability of sensing a $+2.5^M$ star with a considerably smaller instrument than that developed under the current program.

Another sensing system improvement currently being investigated would provide the sensor with the capability of responding selectively to stars of a particular magnitude. In this case, logic circuits would be so arranged as to reject stars of magnitudes other than that desired by thresholding the video signals at the proper levels.

These and other similar improvements might be utilized to implement a star-sensor suitable for space flight missions.

3.0 ALIGNMENT INSTRUMENT DISCUSSION

This section is devoted to a detailed description of the developed star sensing system, a discussion of the theory of operation of the system and a discussion of the electrical alignment procedures required.

3.1 Operational Description

As shown in Figure 1, the system consists of a sensor, an amplifier, a high voltage supply and an electronics package. A block diagram of the system is shown in Figure 2.

The sensor utilizes an ITT FW-130 multiplier phototube, a magnetic deflection yoke, and an f/1.5, 2-inch diameter lens. The FW-130 is an imaging phototube with an S-20 photocathode and with the screen replaced by a mechanical limiting aperture. Just behind the aperture is the first dynode of a 16-stage secondary emission multiplier section.

In operation, the lens focuses the optical image of the star on the photocathode where it is converted to an electron image. An electrostatic potential between the photocathode and the first dynode accelerates the electron image toward the aperture plate. A magnetic field, generated by current in the deflection yoke coils, is controlled so as to sweep the electron image across the mechanical aperture.

Both acquisition and track modes of operation are provided. In the acquisition mode, the electron image of the photocathode area corresponding to a 5 x 5 degree field of view is swept across the aperture in a raster scan at a rate of 50 frames per second. As long as no star image is present in this acquisition field of view, there is no tracker output. As the image of a star is swept across the aperture, a video pulse is emitted by the sensor. This signal is amplified and transmitted to the electronics package.

The video output is passed through electronic gates to determine the quadrant of the photocathode in which the optical image appears. The polarities of the constant magnitude acquisition error signals, which are then generated in both the pitch and yaw directions, are determined by the quadrant in which the image is detected. These acquisition error signals may be utilized as the inputs to a servo control system which rotates the sensor until the star image approaches the center of the acquisition field of view.

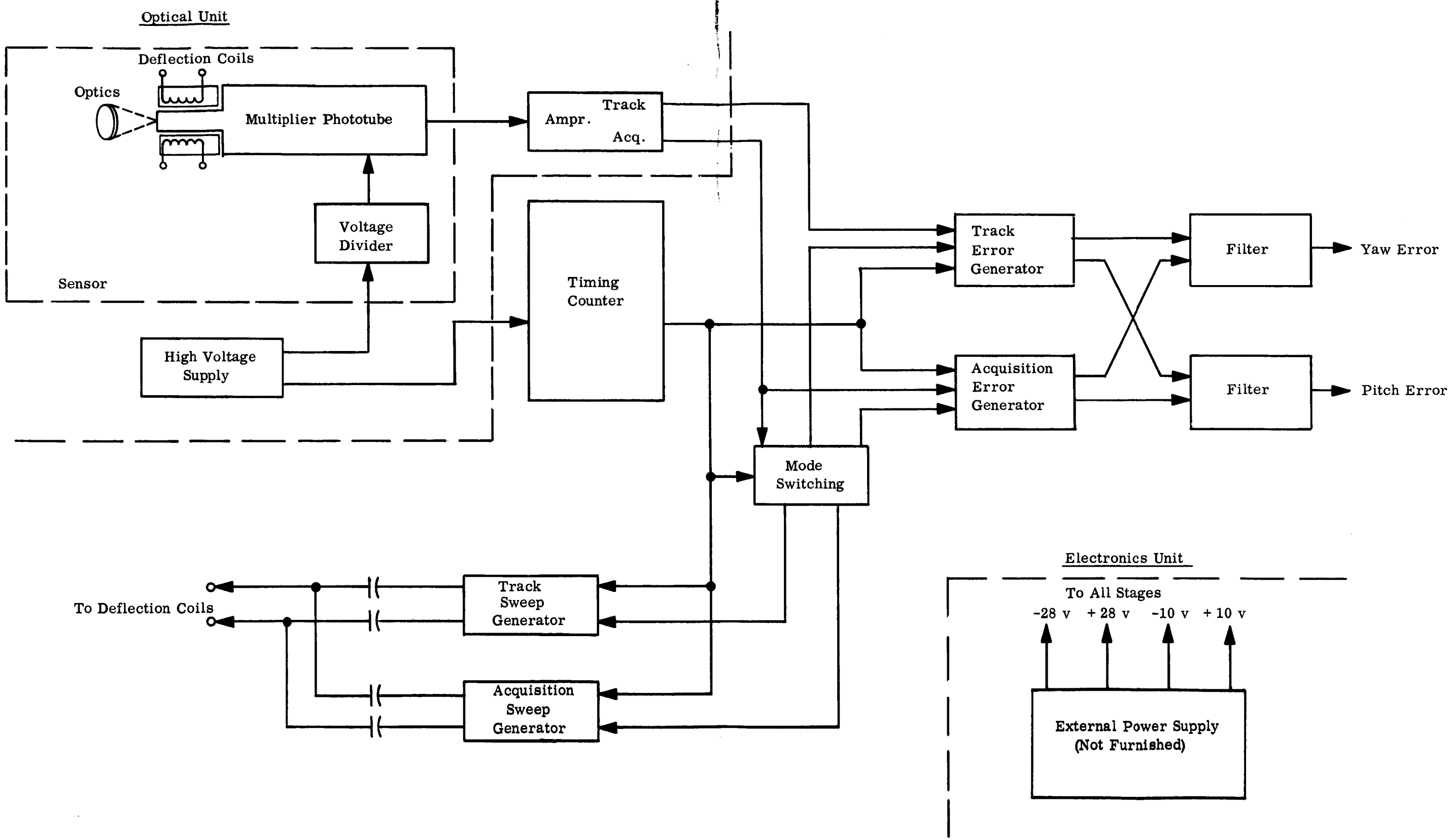

Figure 2 Star Sensing System Block Diagram

As the star image crosses into the instantaneous field of view, the operation automatically switches to the track mode. In this mode of operation, the electron image of the center portion of the photocathode is swept across the aperture in a cruciform pattern at a rate of 400 cycles per second. The video output from the sensor is a series of equal width pulses as long as the star image is on the null axis of the sensor. As the star image moves away from the center of the photocathode, the pulse widths become unequal and error voltages are generated that are proportional to the angular displacement of image from the null axis in both the yaw and pitch directions. These track error signals may then be used to reposition the sensor and maintain the star image on the null axis.

The sensor has been designed such that the operation automatically returns to the acquisition mode if the star image leaves the track field of view.

3.1.1 Sensor Package

The sensor unit is a cylindrical package consisting of the lens system, photomultiplier tube, deflection coil, and a voltage divider chain. The video, high voltage, and sweep signals are fed through leads from the rear of the package. An assembly drawing of the sensor package (ITTFL Drawing No. 4706659) is shown in Figure 3.

3.1.2 Video Amplifier and High Voltage Supply

These units are packaged in small cylindrical metal cans and are to be mounted on the platform near the sensor unit. The units use a module form of stacked printed-circuit boards upon which the electronic components are mounted. The input and output connections are made by feed-through solder terminals on the top of each can. The video amplifier also has two threshold potentiometer adjustments on the top surface.

3.1.3 Electronics Unit

The electronics unit consists of eight printed-circuit cards and two terminal boards mounted in a 12 by 7 by 6-inch metal box. This unit is to be mounted separate from the platform. Two pushbutton controls are available on the electronics unit. These are mode control switches which can be used to place the sensor in either an acquisition or track mode of scan. However, the automatic switchover circuits cannot be disabled unless the acquisition video cable is removed. Primary power for the tracker system is supplied to the electronics unit from an external source. Control of the power supplies must be accomplished at the external source.

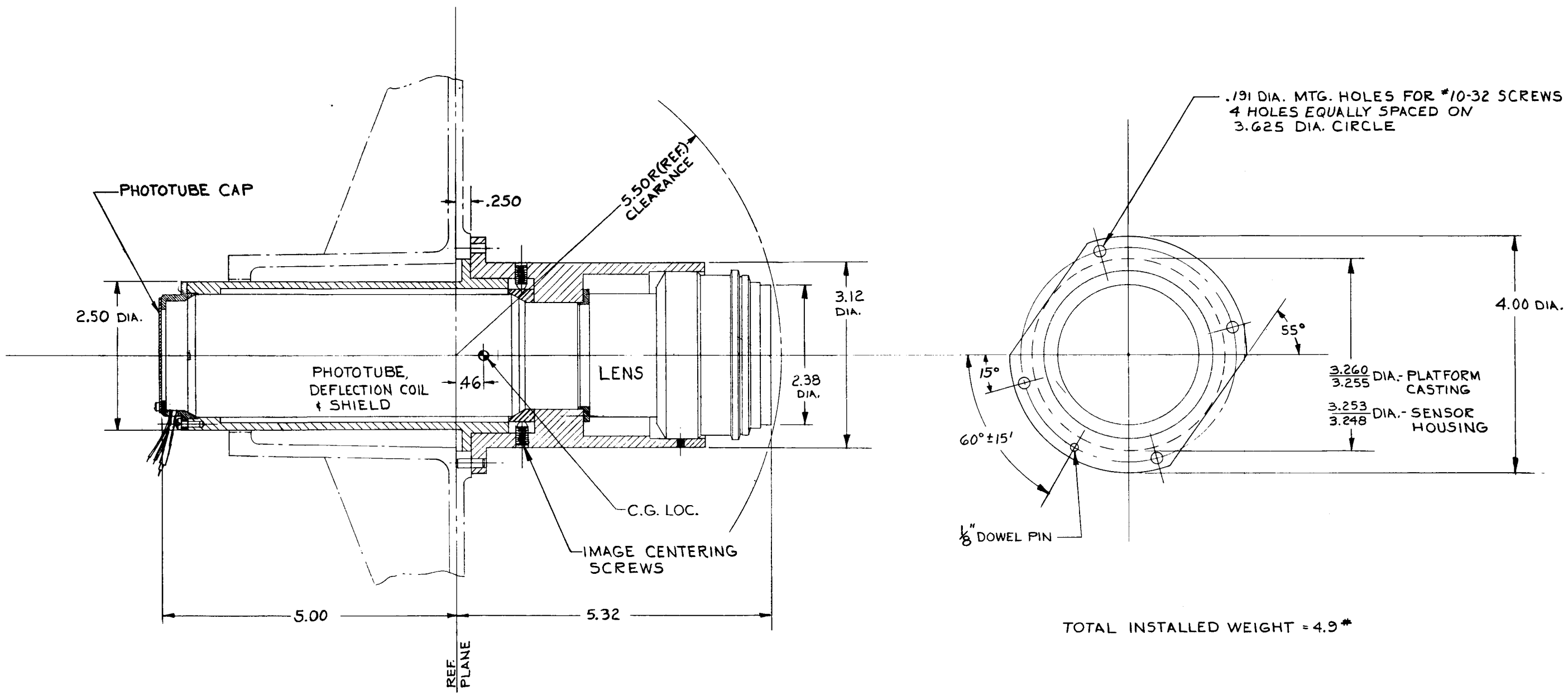

Figure 3 Star Sensing System Assembly

When power is initially applied to the tracker, switching of the set to acquisition control will be required to initially set the switchover flip flop. A schematic of the electronics unit (ITTFL Drawing No. 4706766) wiring is shown in Figure 4.

Interconnecting cables to the electronics unit include the following:

7-pin cable to primary power

7-pin cable to sensor packages

2 coaxial cable outputs for error voltages

Three indicator lamps are present on the electronics unit. Two of these operate together to indicate the mode of operation of the tracker. A star presence indicator also lights any time a video signal is present. A 50-cps sync voltage jack is available for use when viewing waveforms with an oscilloscope. The track and acquisition outputs of the video amplifier are also available at output jacks on the electronics unit.

3.2 Operational Theory

The following subsections discuss the theory of operation of the electronic circuits used in the star tracker system.

3.2.1 Optical Unit Electronics

The optical unit electronic circuitry is composed of the voltage divider chain, video amplifier, and a high voltage supply. The operation of these circuits of the optical unit is described below.

3.2.1.1 Voltage Divider Chain

The voltage divider is a zener diode-resistor series chain which distributes the -1800-volt supply output between the image section and each dynode of the multiplier section. A 200-volt zener diode is placed between the photocathode and the first dynode to regulate the accelerating voltage. The last two dynode voltages are also regulated by 91-volt zener diodes to provide a low dynamic impedance and thus decrease the response time of the multiplier section. A schematic of the divider chain (ITTFL Drawing No. 4706657) is shown in Figure 5.

3.2.1.2 High Voltage Power Supply

The -1800-volts required by the photomultiplier is obtained from a d-c to d-c converter operating from the -10-volt supply. It consists of an R-L free-running

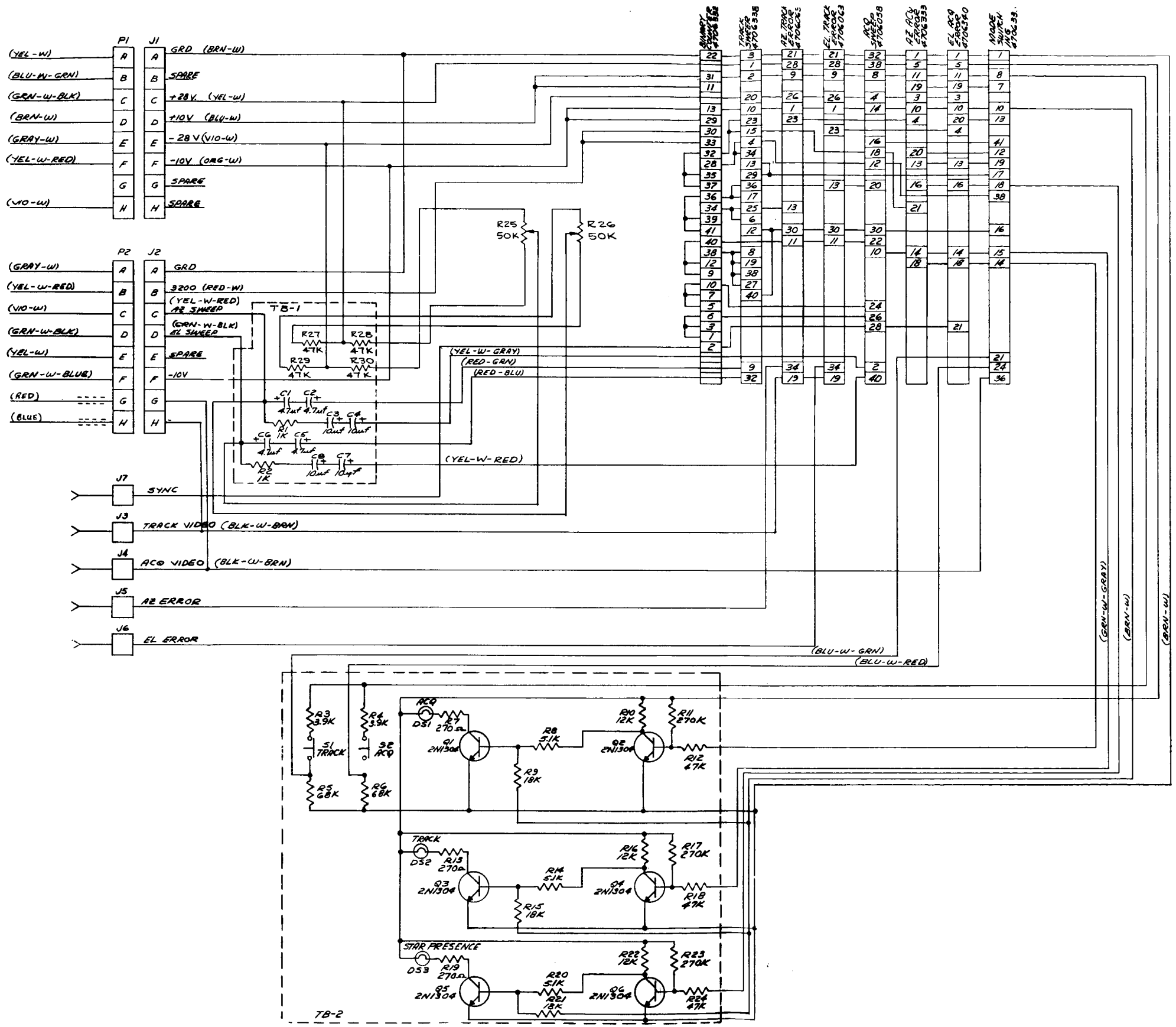

LAST NUMBER USED

C8	J7
R30	P2
Q6	

NOTES:
1. ALL RESISTORS ARE IN OHMS, ½ WATT ± 5%.
2. ALL CAPACITORS ARE IN MICROFARADS, ± 10%, 35V.
3. ALL INDICATOR LAMPS ARE #1829.
4. J1 - AMPHENOL 165-15
5. J2 - AMPHENOL 165-16
6. J3 THRU J6 - UG1094/U
7. P1 - AMPHENOL - 165-14
8. P2 - AMPHENOL - 165-17
9. S1 & S2 ARE NORMALLY OPEN PUSHBUTTONS.

Figure 4 Electronics Unit Wiring Diagram

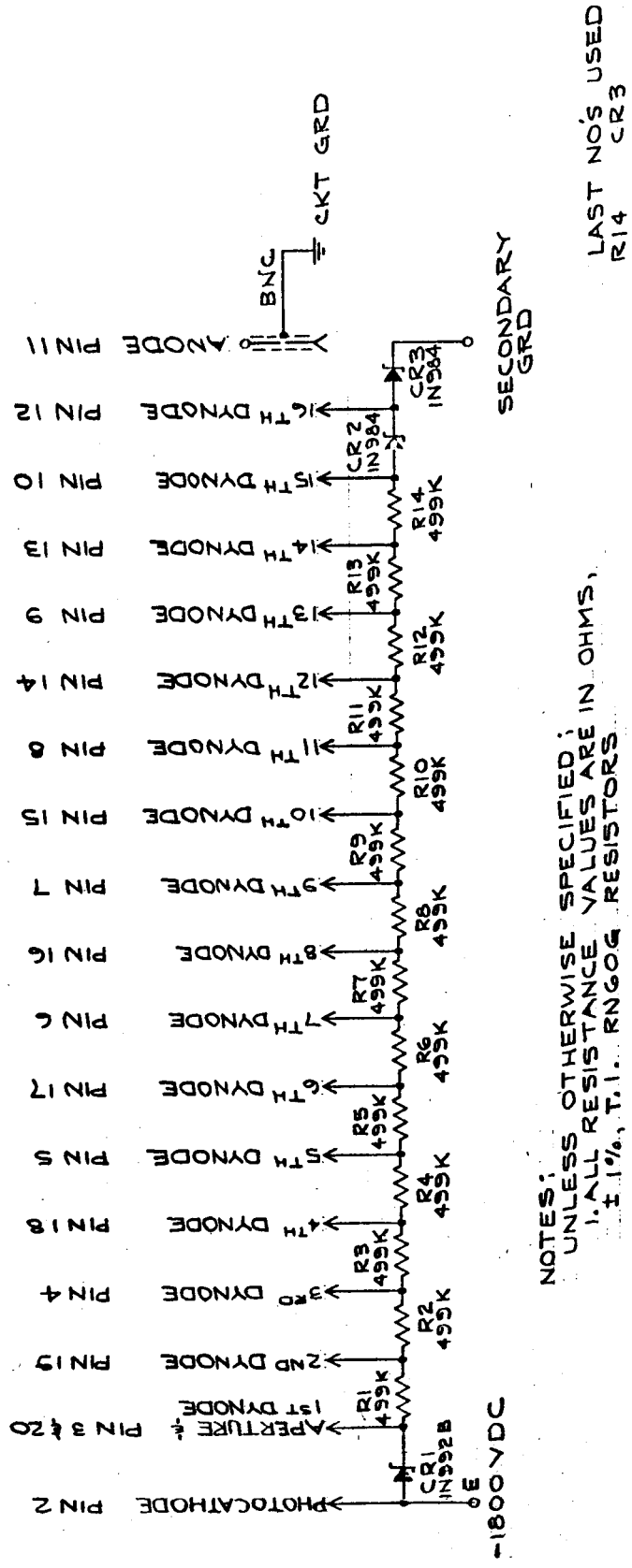

Figure 5 Schematic Diagram, Voltage Divider Multiplier Phototube

multivibrator whose square wave output is increased to 450 volts ac by a step-up transformer. A rectifier and voltage multiplier section then raises the potential to -1800 volts dc at 180 microamperes. A coupling network from the multivibrator provides a 20-volt peak-to-peak square wave output to drive the system timing chain. A schematic of the high voltage power supply (ITTFL Drawing No. 4706066) is shown in Figure 6.

3.2.1.3 Video Amplifier

The video information from the photomultiplier tube is amplified and converted to square pulses by the amplifier. The amplifier has separate outputs for the track and acquisition modes, to provide separate threshold control in each mode of operation. The first two stages are a-c coupled and are common to both modes.

The acquisition portion consists of two stages of d-c amplification with a threshold controlled input which is set to pass only the video signals sufficiently to provide a saturated output. This setting eliminates most noise from the acquisition output. Two silicon diodes are placed in series with the emitter of the first transistor to increase the threshold control capability.

The track portion of the amplifier consists of two stages of amplification to square the input signal. A 5-K potentiometer is used to determine the magnitude of input signal required to provide a saturated output. Track thresholding is usually set to cause squaring at the mid-point of the video waveform. Error information is then determined from the output pulse widths and positions. On weaker stars, the setting of the above-mentioned track threshold control will affect the slope of the error voltage characteristics.

A schematic of the video amplifier (ITTFL Drawing No. 4706765) is shown in Figure 7.

3.2.2 Electronics Unit

The electronics unit is composed of the timing counters, the sweep generators, error generators, and mode control circuits which process the video received from the sensor unit. Each circuit is discussed in detail below.

3.2.2.1 Timing Counter

A system timing clock frequency of 3200 cps is obtained from an R-L multivibrator in the high voltage power supply d-c to d-c converter. This method

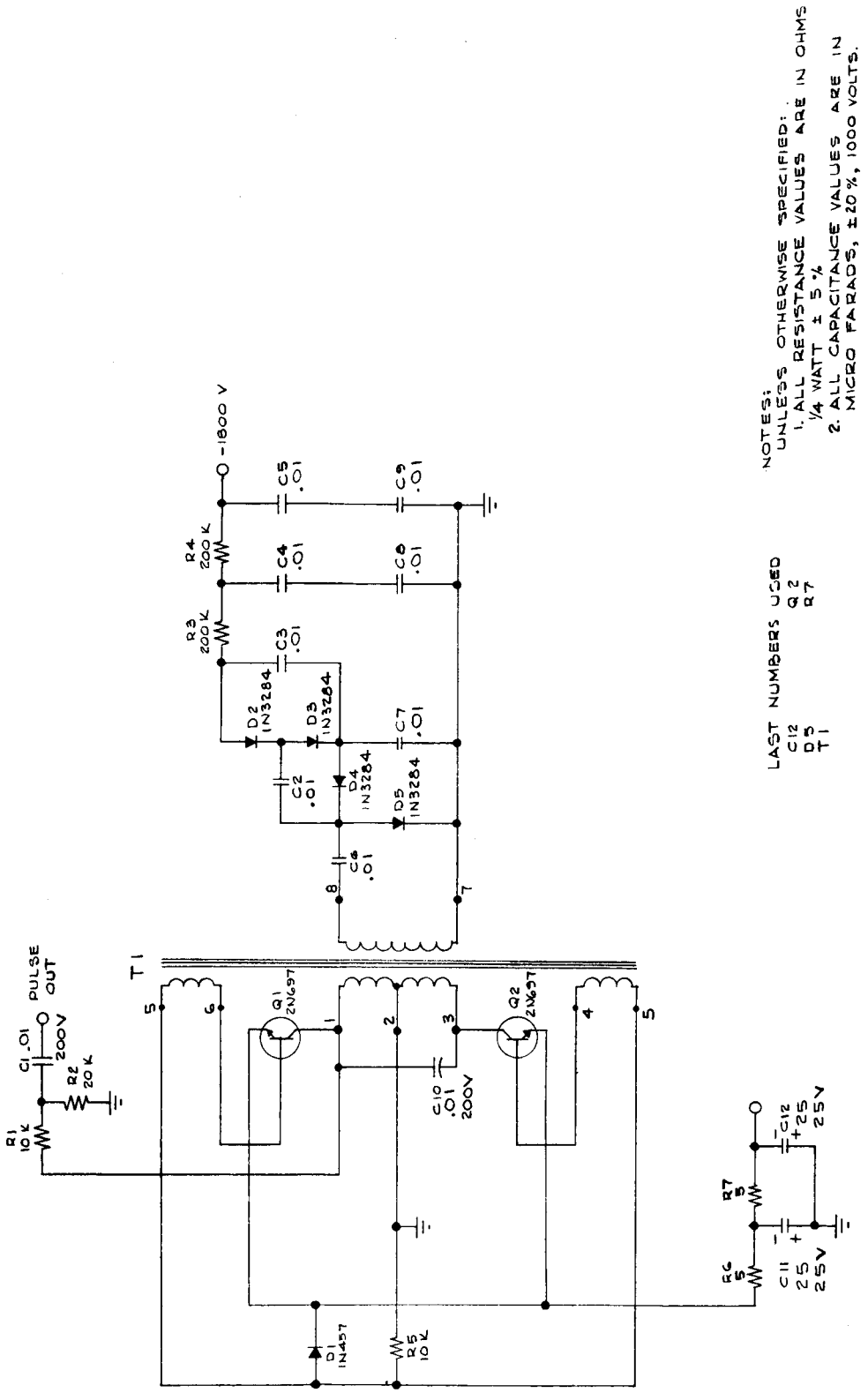

NOTES:
UNLESS OTHERWISE SPECIFIED:
1. ALL RESISTANCE VALUES ARE IN OHMS
1/4 WATT ± 5 %
2. ALL CAPACITANCE VALUES ARE IN MICRO FARADS, ±20 %, 1000 VOLTS.

LAST NUMBERS USED
C12
D5
T1
Q2
R7

Figure 6 High Voltage Power Supply Schematic Diagram

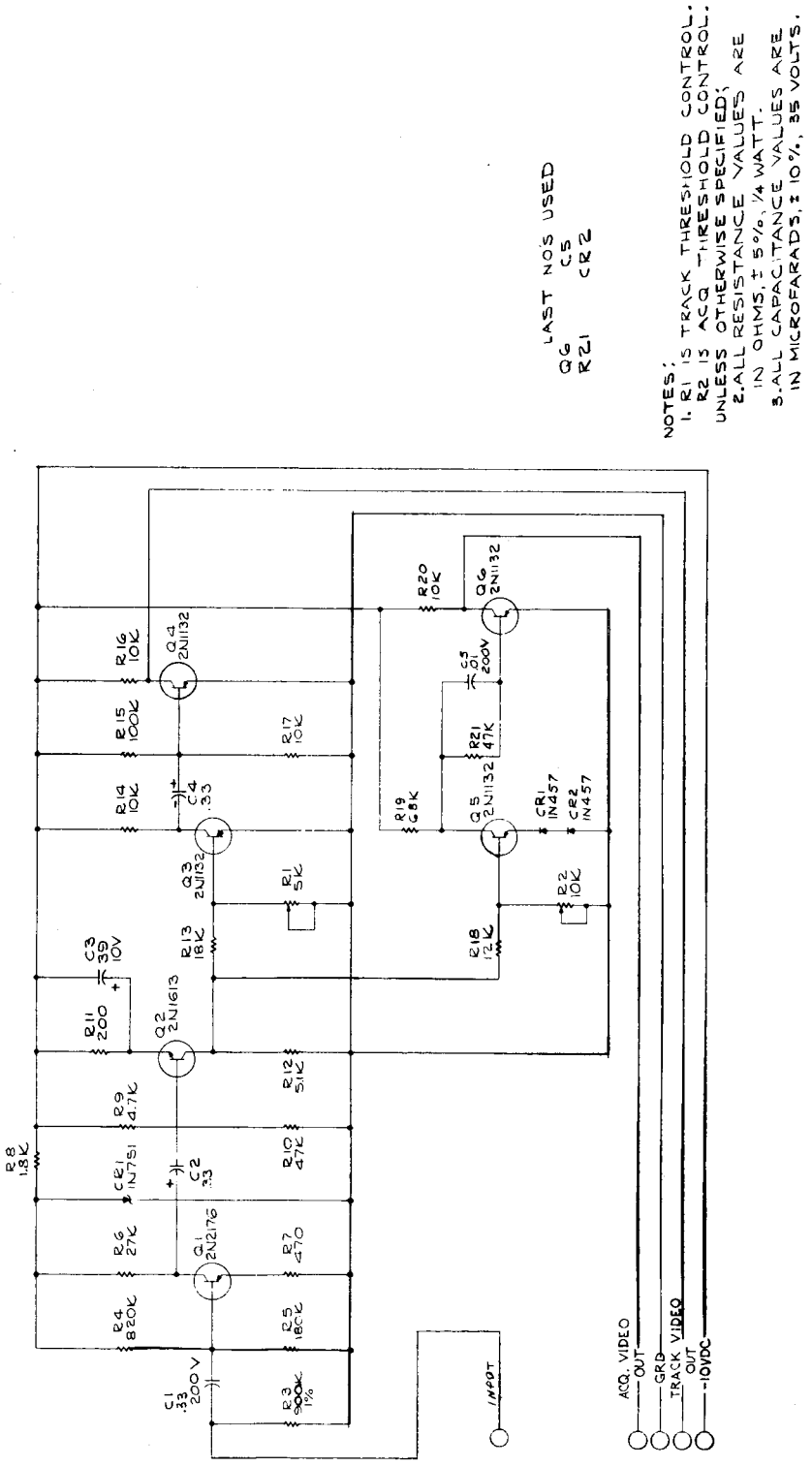

Figure 7 Video Amplifier Schematic Diagram

of timing reduces the effects of interference by transients from the high voltage supply. A block diagram of the timing counter is shown in Figure 8.

A six-stage binary counter operates on the 3200-cps clock frequency to provide timing square waves at frequencies of 1600, 800, 400, 200, 100, and 50 cps. The complements of these square waves are also available from the opposite sides of the counter flip flops. A schematic of the binary counter (ITTFL Drawing No. 4706332) is shown in Figure 9.

3.2.2.2 Acquisition Sweep Generator

The acquisition sweep generator provides a 1600-cps triangular sweep current for azimuth deflection and a 50-cps sawtooth sweep current for elevation deflection. The 50-cps sawtooth has a retrace time of one half of a 1600-cps period or 312.5 μsec. Thus a 32-line raster with frame frequency of 50 cps is generated. Figure 10 shows a block diagram of this circuit, and the schematic diagram (ITTFL Drawing No. 4706058) is shown in Figure 11. The 1600 cps timing waveform drives an inverter which gates a Miller integrator to generate a 1600-cps triangular waveform. The integrator output is used to drive a complementary push-pull sweep amplifier to furnish the sweep drive current to the deflection coil.

A diode OR gate provides the proper timing gate to switch a Miller integrator, generating the 50-cps sawtooth with the proper retrace time. The OR gate output also furnishes a retrace blanking pulse. The elevation Miller integrator uses an emitter follower in the capacitor feedback path to allow a rapid recovery during the retrace interval. The sawtooth voltage is fed to a sweep amplifier identical to the azimuth sweep output amplifier. Both sweep current outputs are capacitively coupled to the deflection coils.

Switchover from the acquisition mode to the track mode is performed by turning on transistor switches (Q3, Q6, Q9, and Q12 of Figure 11) which shift the operating point of the sweep amplifiers out of the active region. Sweep killing is done here rather than at the integrators to improve the switchover transient response time. To return operation to the acquisition mode, the sweep killer switches are biased off.

3.2.2.3 Track Sweep Generator

The cross scan waveforms generated by the track sweep generator are shown in Figure 12 which illustrates the system timing for the track mode of operation.

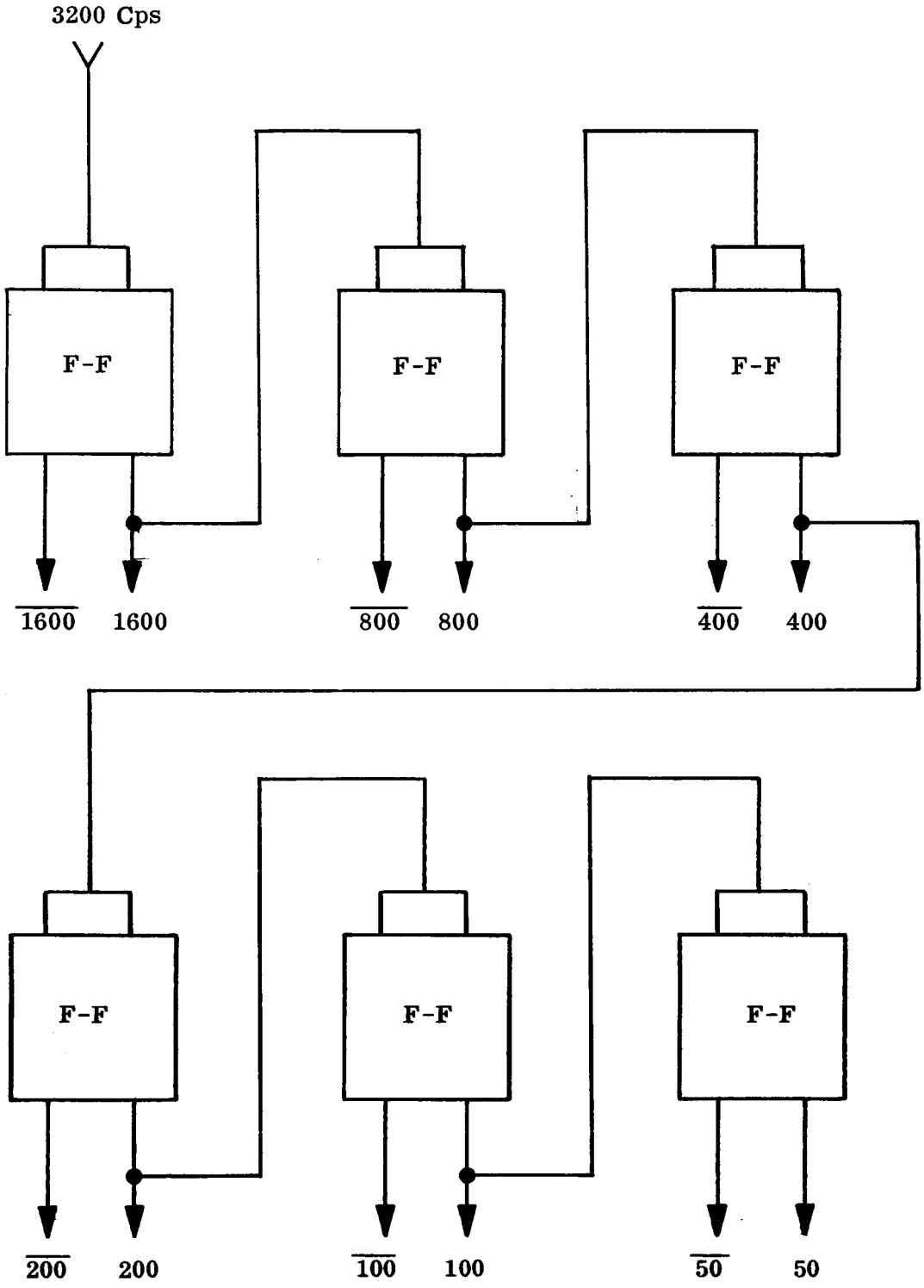

Figure 8 Timing Chain Block Diagram

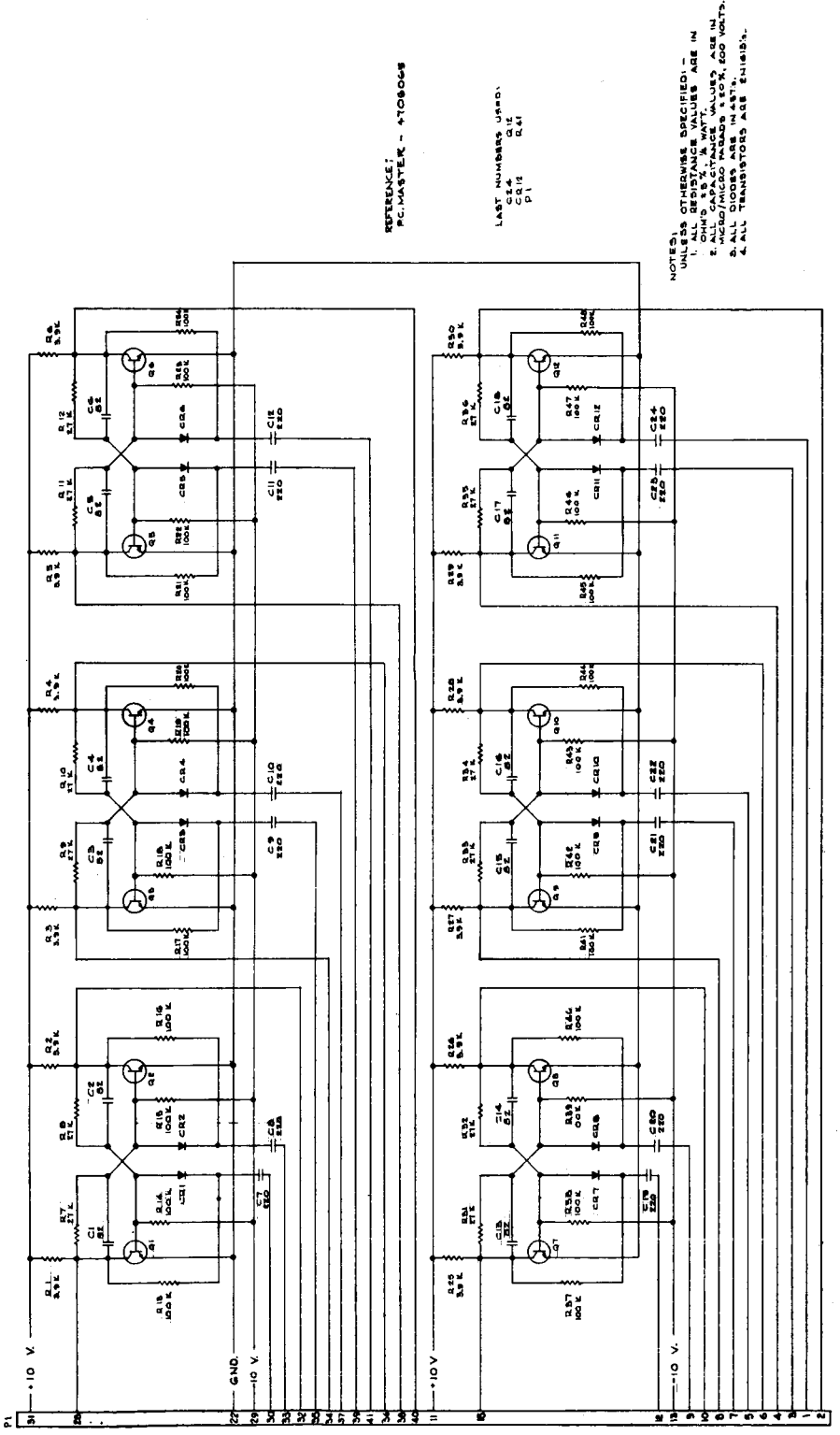

Figure 9 Binary Counter Schematic Diagram

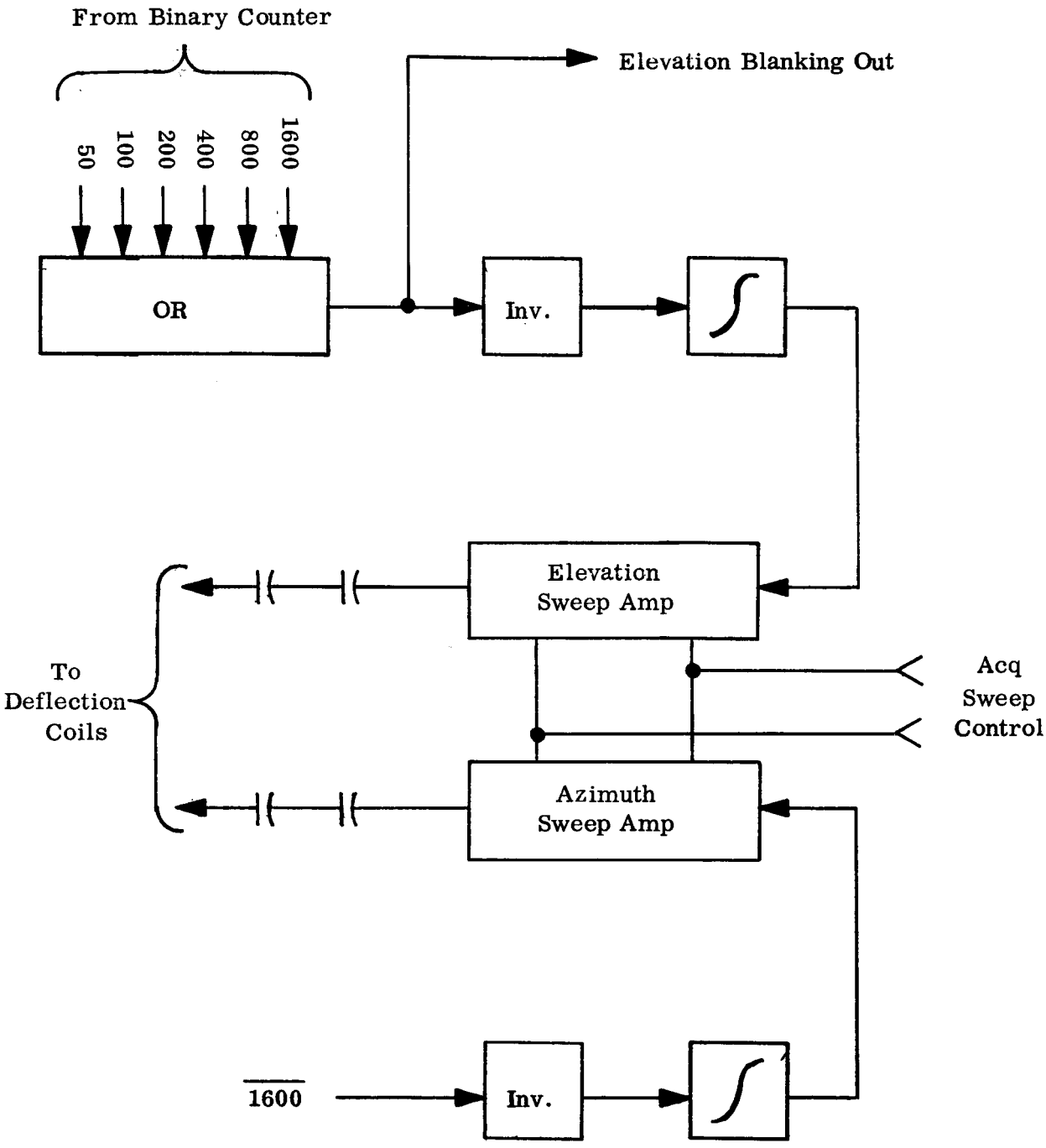

Figure 10 Acquisition Sweep Generator Block Diagram

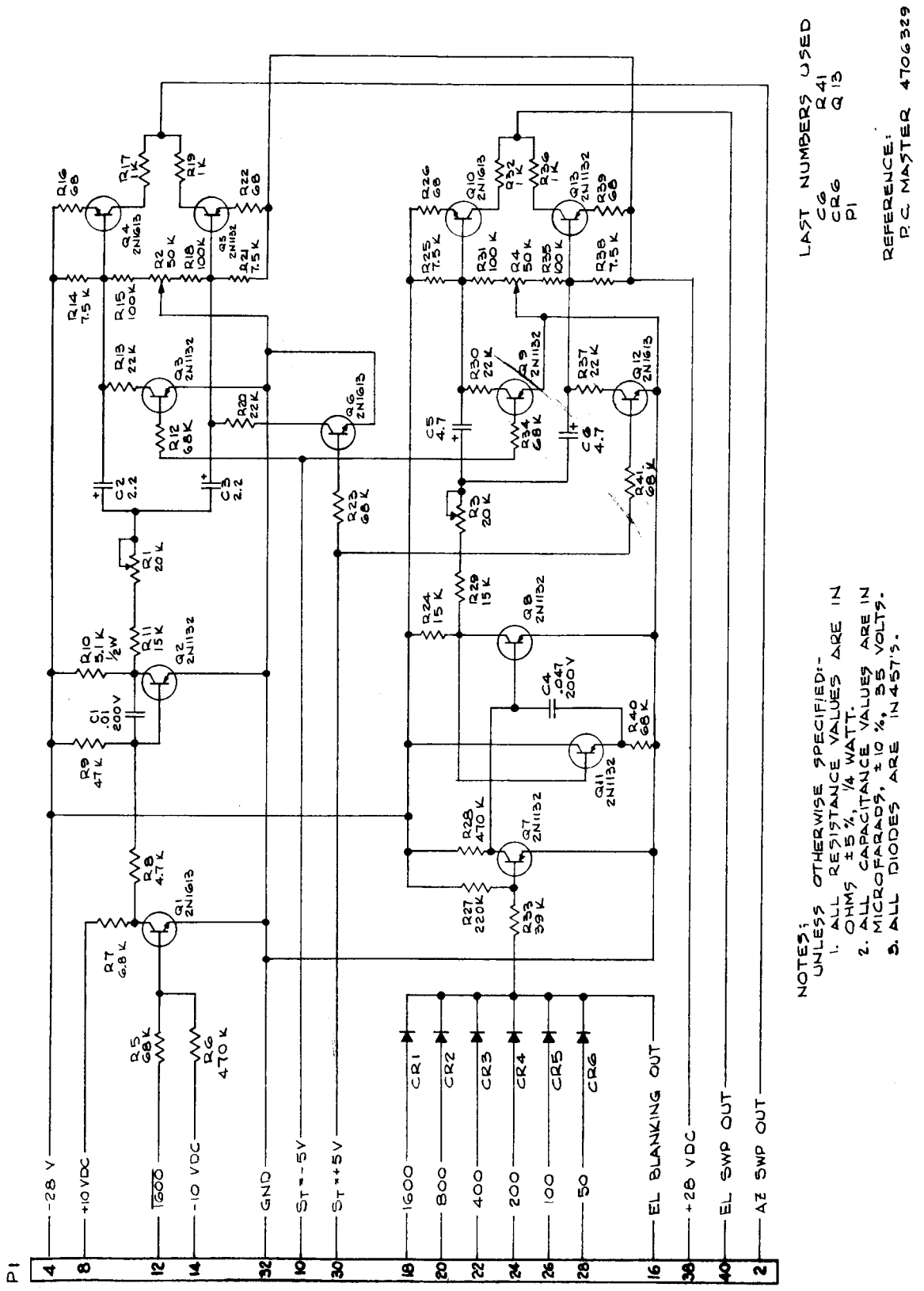

Figure 11 Acquisition Sweep Schematic Diagram

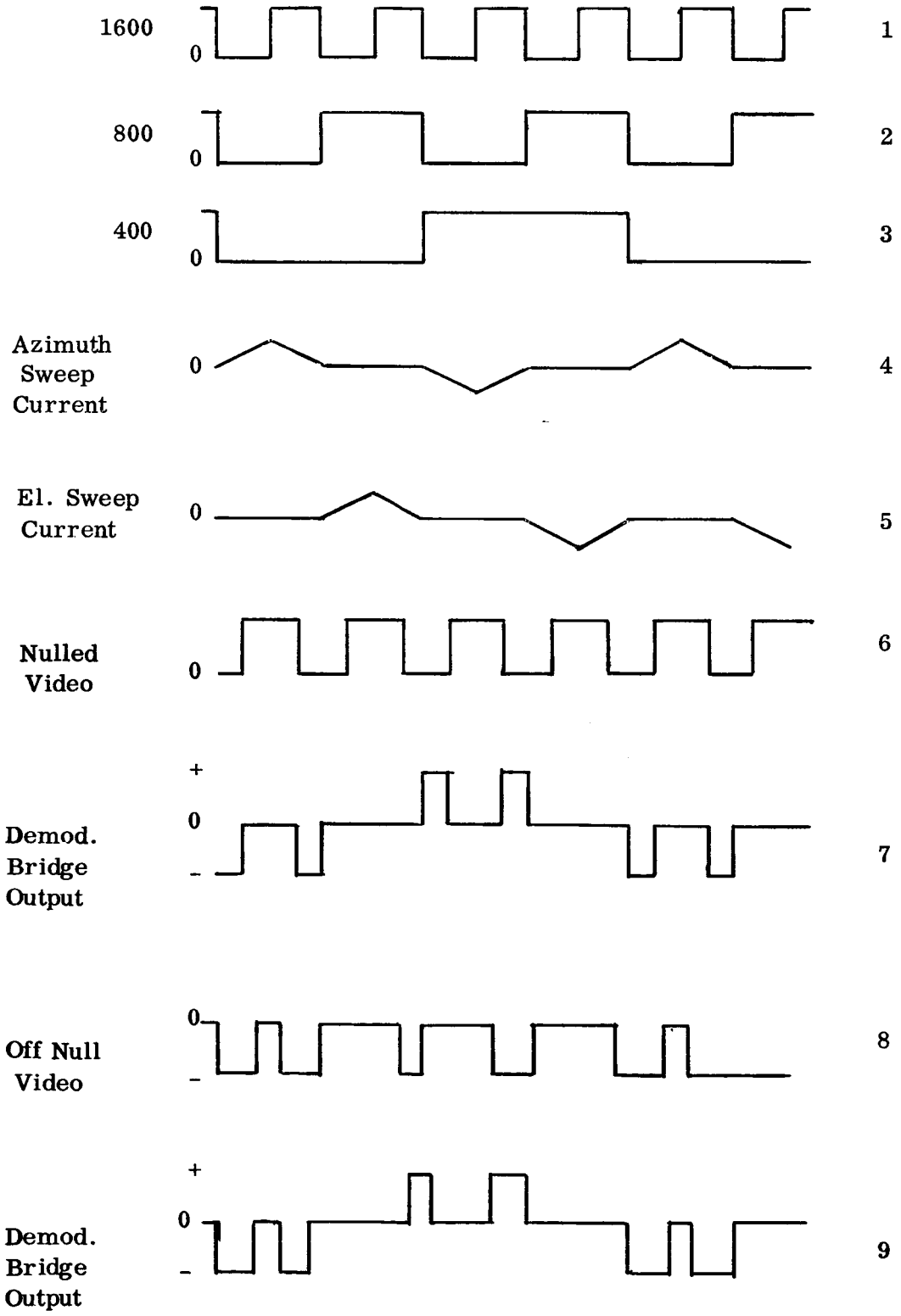

Figure 12 Track Mode Waveforms

Miller integrators are used to generate triangular waveforms when switched by an inverter circuit. The timing gates to place the triangular waveforms in the appropriate position are generated by OR and AND gates driven from the counter timing chain. The outputs of the Miller integrators are summed in a resistive network and capacitively coupled to the deflection coils. The track sweep generator is disabled in the acquisition mode by additional inputs to the timing AND and OR gates to hold the inverter switches in cut-off or saturation. The inputs to do this come from the mode switching circuits.

A block diagram of the track sweep generator is shown in Figure 13. The schematic diagram (ITTFL Drawing No. 4706338) is shown in Figure 14.

3.2.2.4 Acquisition Error Generator

During the acquisition mode, the acquisition error generator provides constant d-c error voltages, the polarities of which are determined by the position of the star image in the acquisition field of view. The elevation output is positive for targets in the upper half of the scan and negative for targets in the lower half. The azimuth output is positive for targets in the right half and negative for targets in the left half of the raster scan. These polarities can be reversed by interchanging the deflection coil lead connections.

The azimuth error generator block diagram is given in Figure 15 and the schematic diagram (ITTFL Drawing No. 4706333) is shown in Figure 16. Two polarity gates are generated by a monostable multivibrator which is triggered at the same rate as the azimuth sweep. Therefore, for each azimuth sweep trace, a gate is generated for the first half of the sweep and a gate is generated for the second half of the sweep. These two gates, taken from the two sides of the MSMV, have time durations of approximately 141 μsec. The two polarity gates are fed to separate AND gates whose other inputs consist of video pulses. Video occurring during the retrace interval is blanked. The outputs of the two AND gates are sent to the set and reset inputs of a flip flop, the state of which determines the polarity of the output voltage. Therefore, if the video pulses occur during first half of the azimuth sweep, the flip flop is set to one state and if the video occurs during the second half, the flip flop is set to the other state.

The flip flop outputs are sent through diode logic gates to control two transistor switches whose outputs are summed to form the acquisition error voltage.

Additional inputs to the diode logic gates cause zero acquisition error when there is no star presence or when operation is in the track mode.

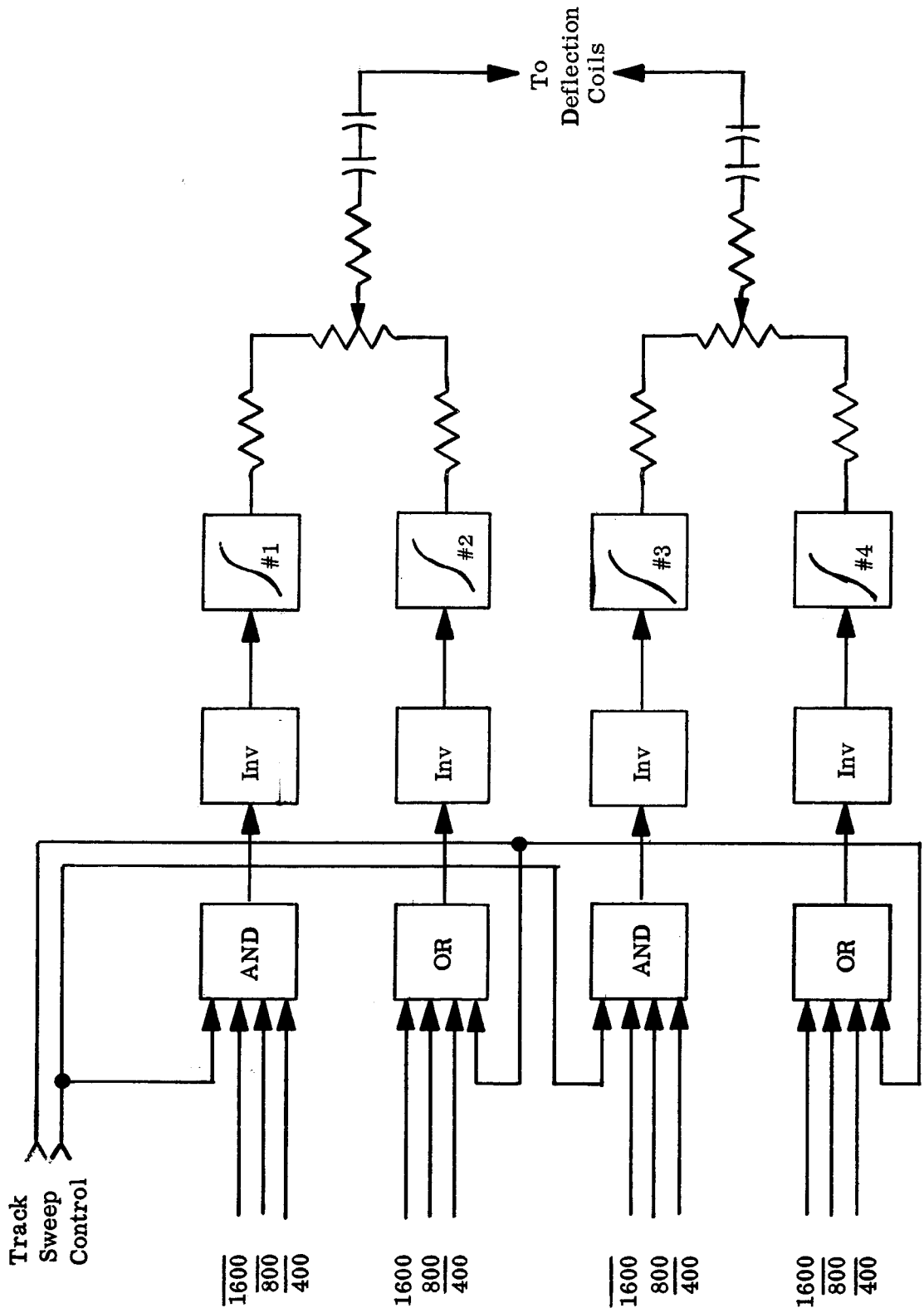

Figure 13 Track Sweep Generator Block Diagram

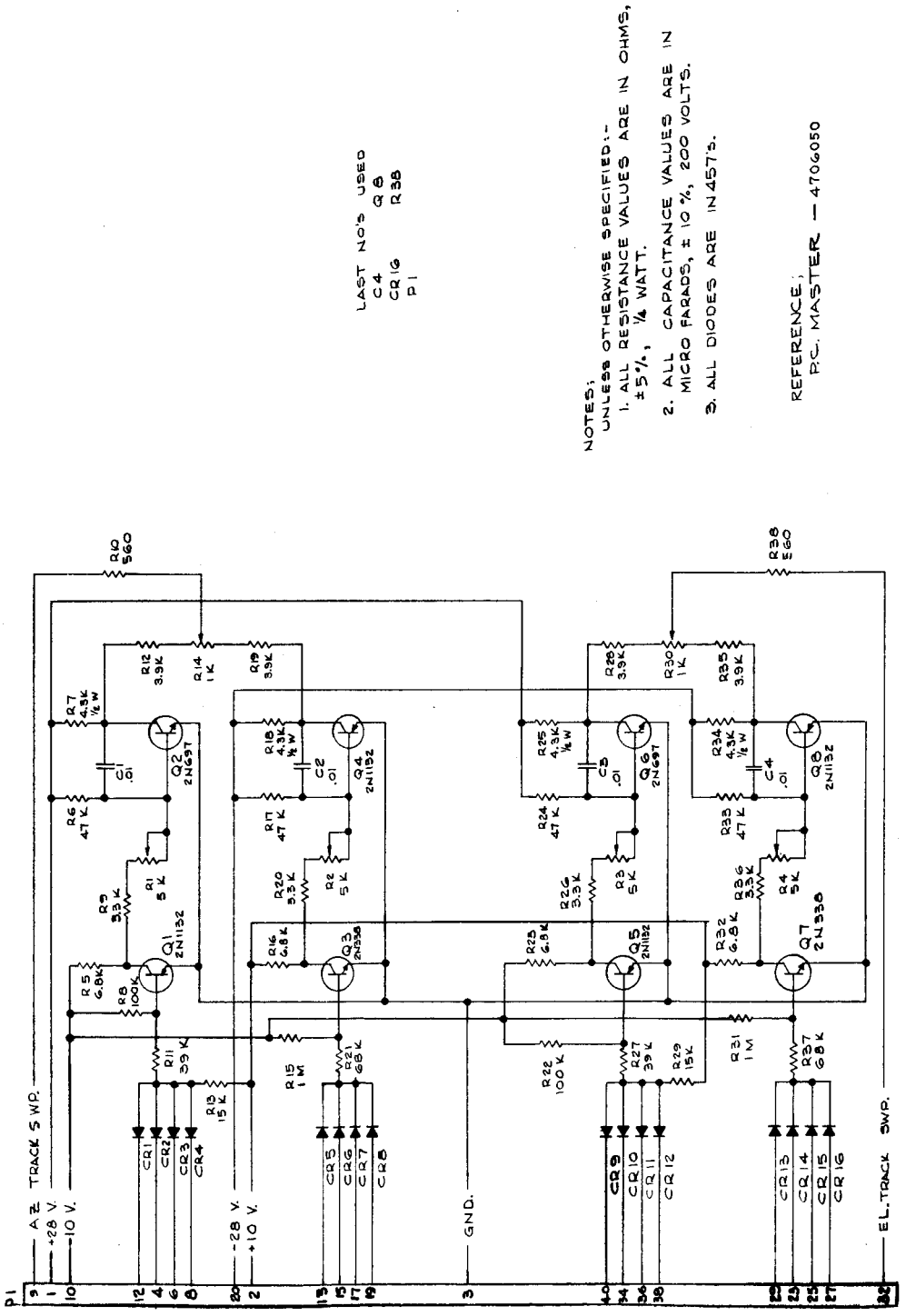

Figure 14 Track Sweep Generator Schematic Diagram

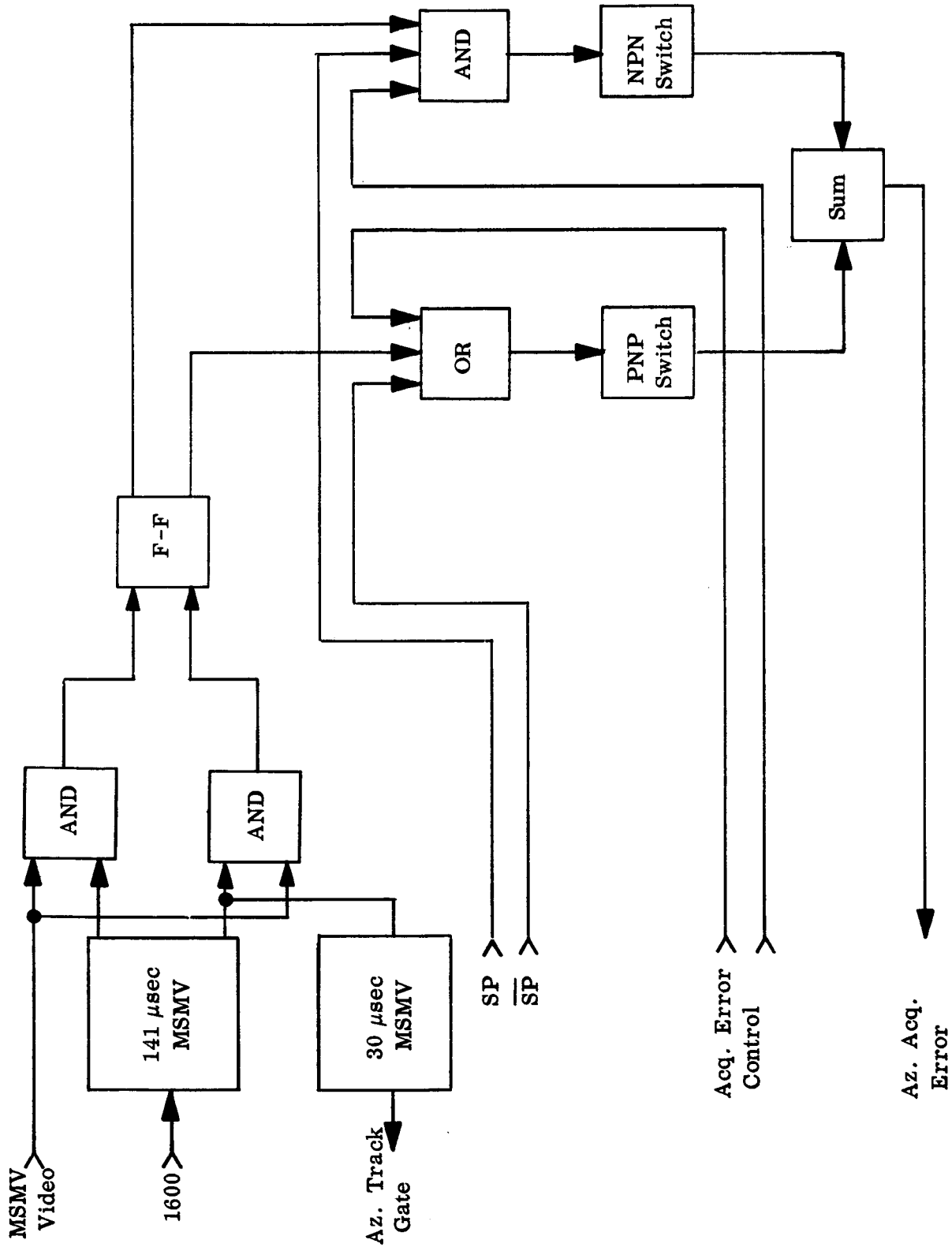

Figure 15 Azimuth Acquisition Error Generator Block Diagram

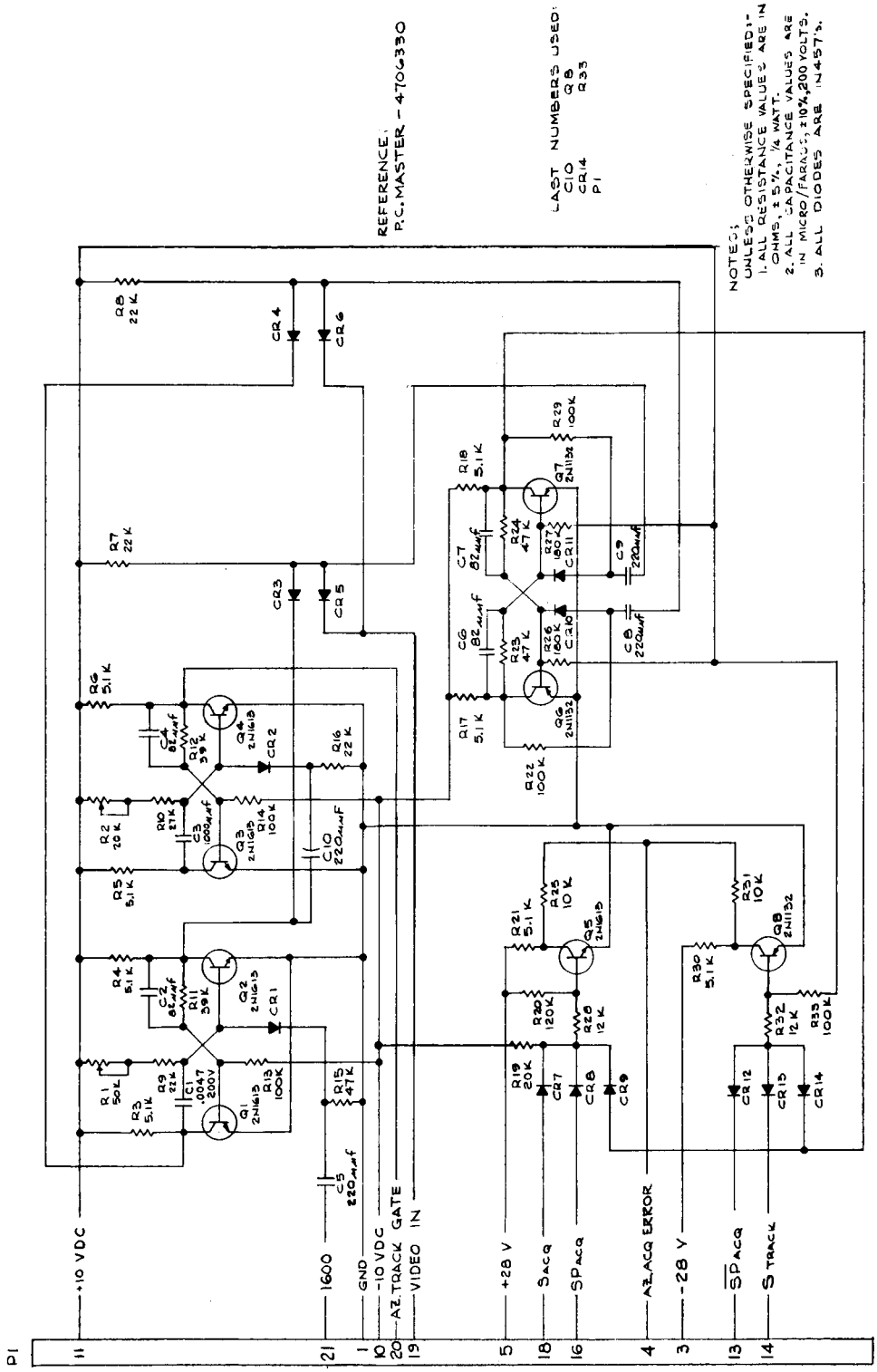

Figure 16 Azimuth Acquisition Error Generator Schematic Diagram

The azimuth acquisition error circuit also contains a 30-μsec MSMV which is triggered by the polarity MSMV to provide an azimuth tracking gate in the center of the azimuth sweep.

The elevation acquisition error generator, shown in block diagram form in Figure 17, is identical in function to the azimuth channel except that the time intervals and gates have durations comparable to the elevation sweep. A schematic diagram of this circuit (ITTFL Drawing No. 4706340) is shown in Figure 18. The polarity MSMV has a gate duration of approximately 9.22 ms. The elevation tracking gate output width is approximately 1890 μsec centered in time about the point where the elevation sweep current passes through zero.

The error voltage output of each channel is connected to the input side of the respective error voltage filter.

3.2.2.5 Track Error Generator

Two identical track error generators are used in the azimuth and elevation channels. A block diagram of these circuits is shown in Figure 19. The signal from the track video output of the video amplifier is d-c coupled to a single stage amplifier operating between + 10 volts and ground. The output of the inverter is d-c coupled to a diode AND gate and is gated with an 800 or $\overline{800}$ cps square wave from the timing counter. This gate separates the video allowing only the information corresponding to a single axis to appear at its output. This gated video is amplified by a transistor using equal collector and emitter loads to provide phase splitting. The two outputs are then capacitively coupled to NPN and PNP driver circuits which drive a diode bridge. A 400-cps square wave from the timing counter is a-c coupled to a driving amplifier operated between + 10 volts and -10 volts. The driver output is also fed to the diode bridge. The bridge output waveform is then of the form shown in line 7 or 9 of Figure 12.

The bridge output drives a balanced amplifier to generate a larger magnitude error voltage. The balanced amplifier consists of a complementary pair of NPN and PNP transistors whose outputs are d-c coupled to a push-pull amplifier which drives a common load resistance. These stages are operated between ± 28 volts. The maximum error voltage which can be developed is one fourth of the 28-volt saturation level or 7.0 volts. The R-C filter attenuation constant then reduces this figure. The acquisition error voltage is d-c coupled to the common collector load of the balanced amplifier. Filtering is then performed by a two section R-C filter with a corner frequency of approximately 0.6 cps. A schematic diagram of this circuit appears in ITTFL Drawing No. 4706063 shown in Figure 20.

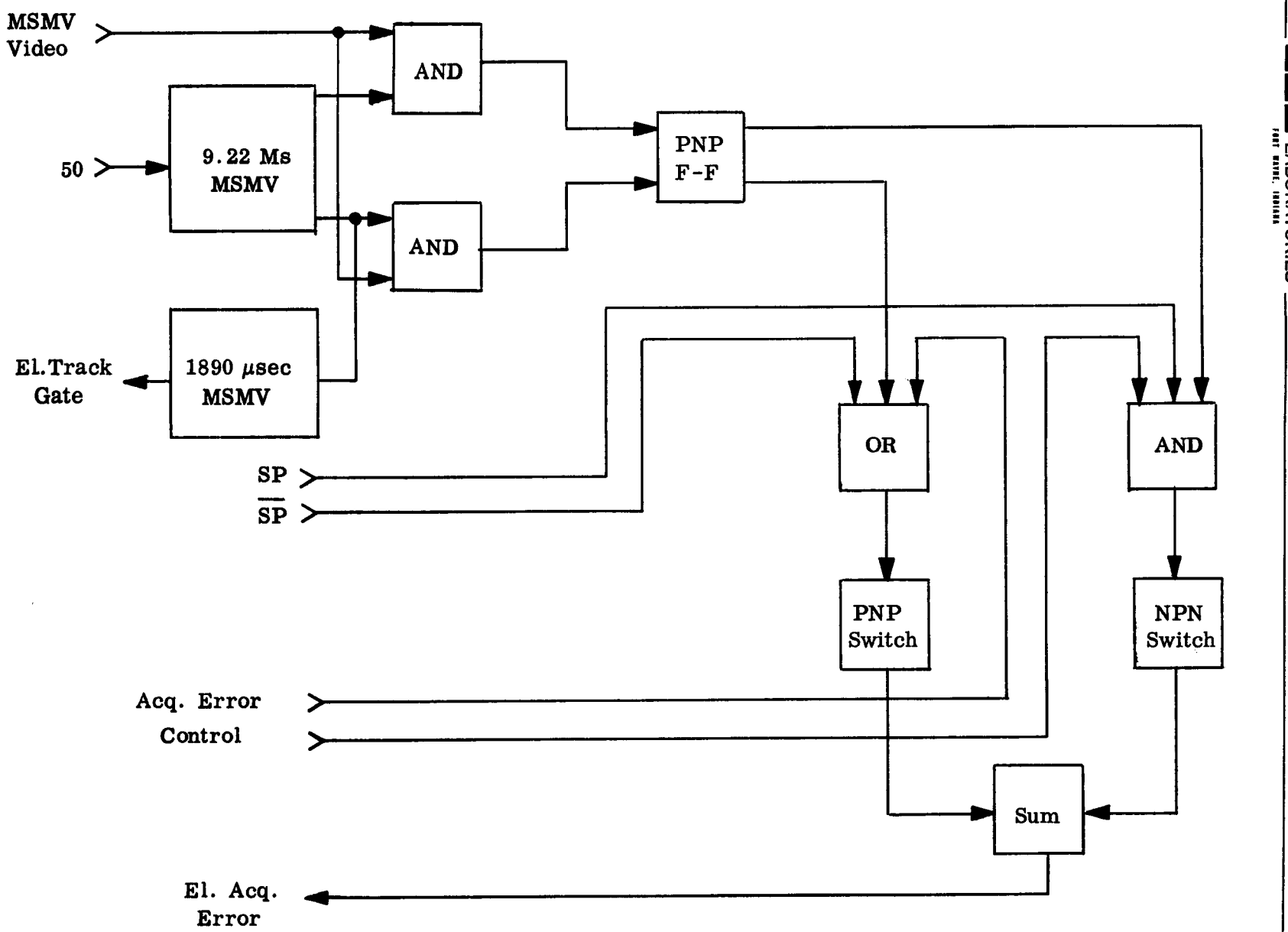

Figure 17 Elevation Acquisition Error Generator Block Diagram

ITT Federal LABORATORIES
FORT WAYNE, INDIANA
A DIVISION OF INTERNATIONAL TELEPHONE AND TELEGRAPH CORPORATION

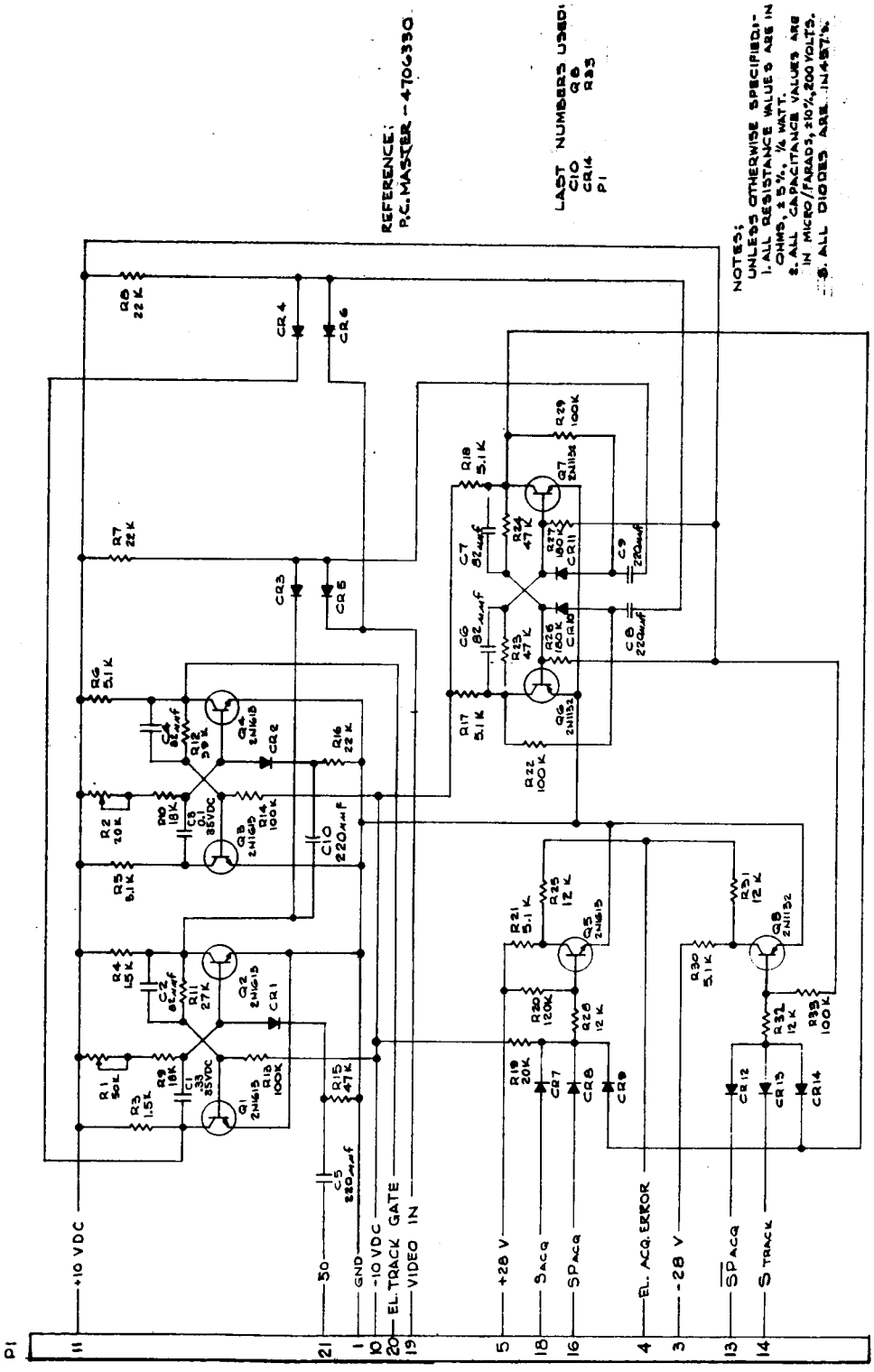

Figure 18 Elevation Acquisition Error Generator

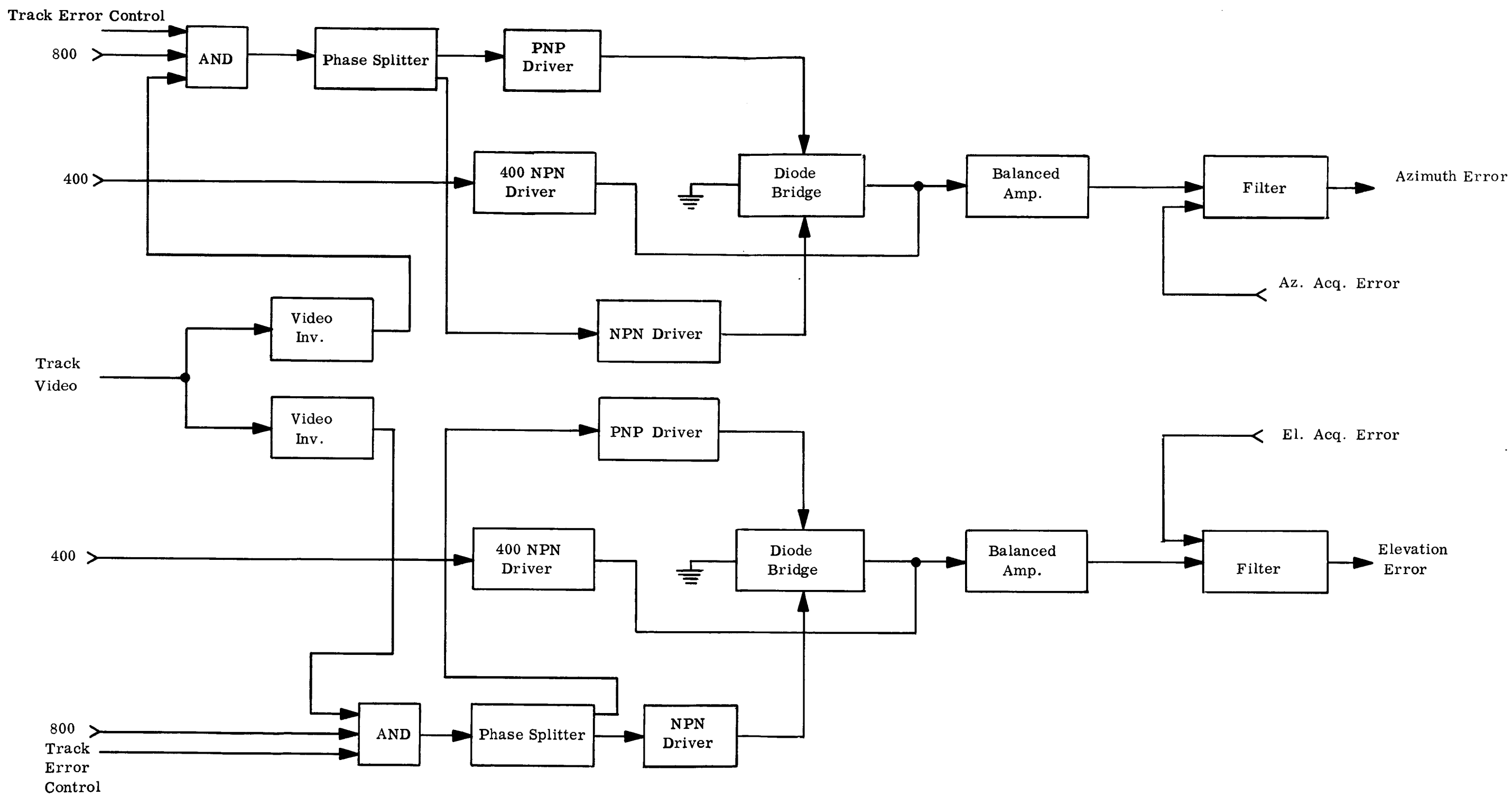

Figure 19 Track Error Generator Block Diagram

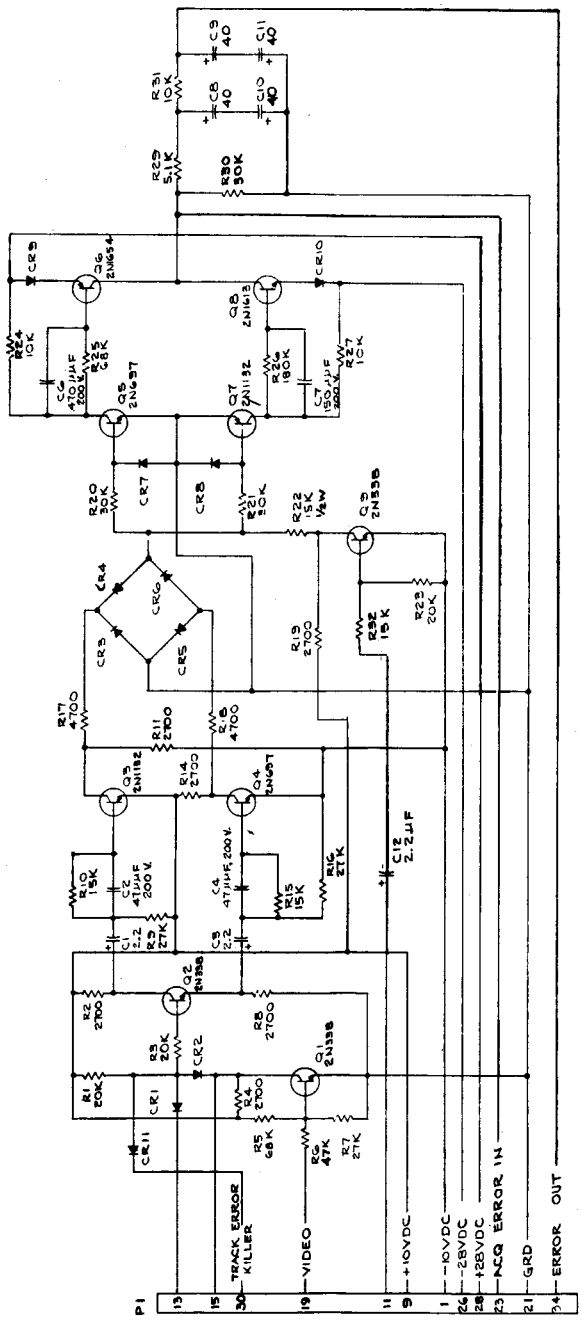

NOTES:
UNLESS OTHERWISE SPECIFIED:
1. ALL RESISTANCE VALUES ARE IN OHMS, ± 5%, ¼ WATT.
2. ALL CAPACITANCE VALUES ARE IN MICROFARADS, ± 10%, 35 VOLTS.
3. ALL DIODES ARE 1N457's.

LAST NO'S USED	
P1	CR11
R32	Q5
C12	

NO'S NOT USED	
R12	C5
R13	
R28	

Figure 20 Track Error Generator Schematic Diagram

3.2.2.6 Mode Switching

A block diagram of the mode switching circuitry is shown in Figure 21 and a schematic diagram (ITTFL Drawing No. 4706339) is shown in Figure 22.

The acquisition output video pulses are used to trigger a star presence MSMV in the mode switch. The MSMV output is filtered and used to control a Schmitt trigger circuit. Thus a logic output is available to indicate video presence. The rapid transition which occurs on loss of signal is used to trigger a switchover flip flop returning operation to the acquisition mode. The star presence signal is also used in the acquisition error generator circuits.

The acquisition video is also gated with azimuth and elevation blanking pulses to remove all video occurring during sweep retrace intervals. This is accomplished by a diode AND gate. A fourth input to the AND gate is from a normally off pulse amplifier. This amplifier provides an output only for a short period of time following switchover from track to acquisition. The purpose is to disable the video input until all sweep switchover transients have died out and normal scanning has started.

The gated video output is used to trigger a video pulse MSMV to provide constant amplitude and duration video pulses to the acquisition error generators and to the switchover gate.

The azimuth and elevation tracking gates from the acquisition error generators are AND gated with the video MSMV output and used to trigger a switchover flip flop. The state of this flip flop determines the mode of operation of the tracker. Therefore, whenever acquisition video pulses coincide with the tracking gates, switchover to the track mode is accomplished.

The tracking gates are centered in time about the point where the sweep currents pass through zero; therefore, the occurrence of acquisition video pulses during this interval of time indicates the star lies within the instantaneous field of view and switchover to the track mode is desired. Loss of the star presence signal then causes a return to the acquisition mode.

The mode switchover flip flop output and inverted outputs are used to accomplish the various switchover tasks as shown in the block diagram, Figure 21.

Manual pushbutton reset inputs are used to allow manual control of the mode of operation by triggering the switchover flip flop. However, switchover to acquisition cannot be achieved while a star is within the track field of view unless the acquisition video input is disabled.

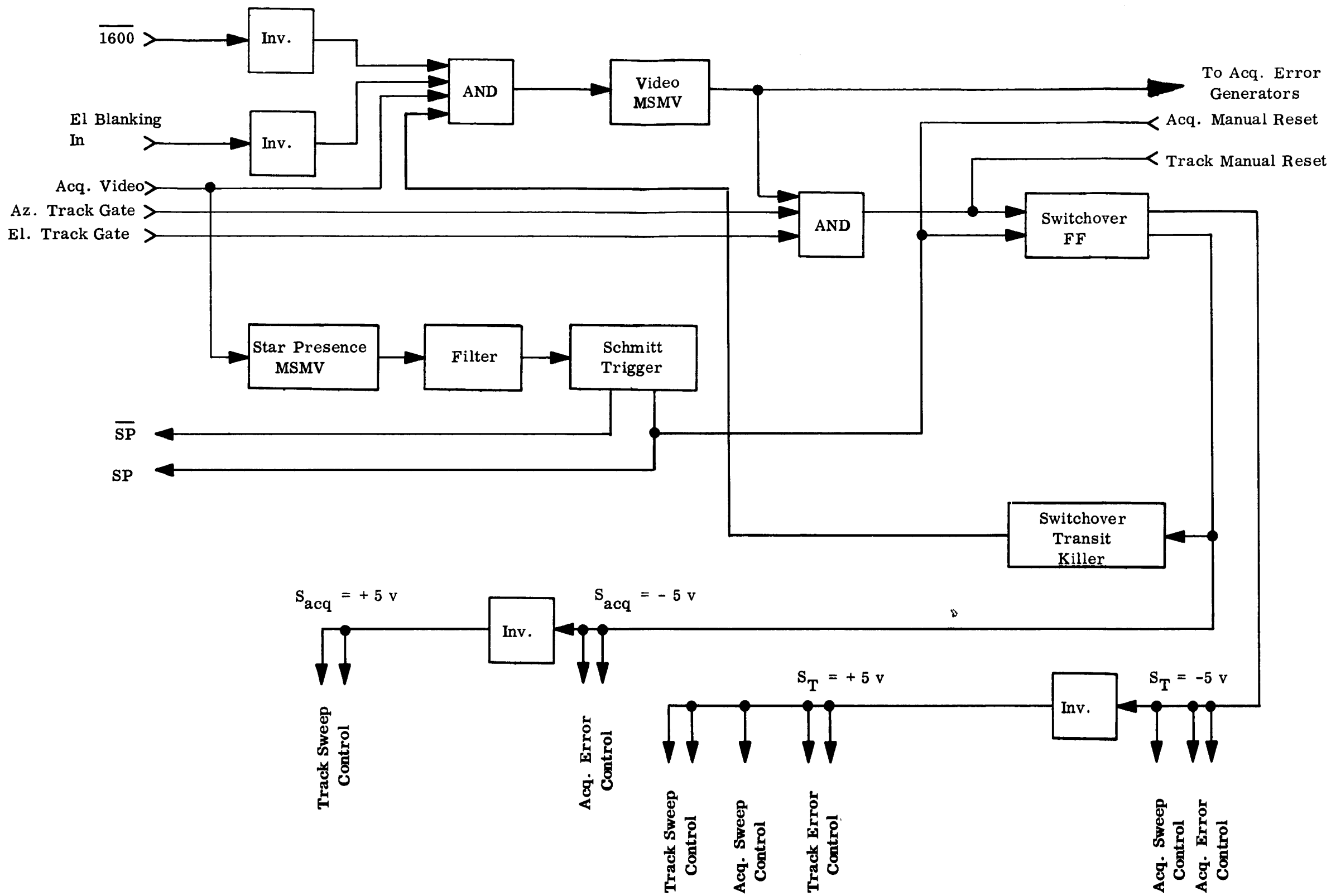

Figure 21 Mode Control Block Diagram

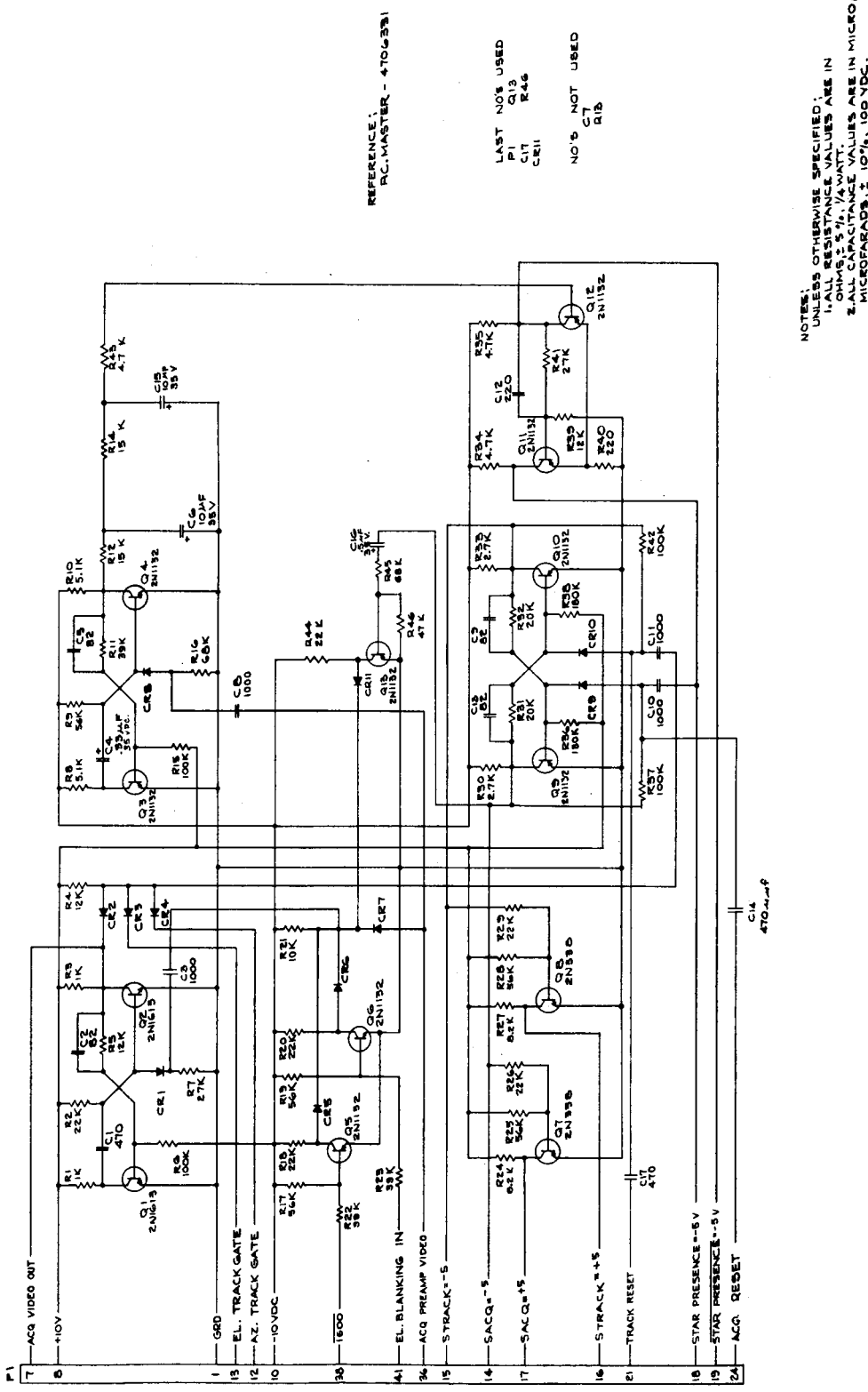

Figure 22 Mode Switching Schematic Diagram

3.3 Electrical Alignment Procedures

The following subsections discuss the setting of the various electrical adjustments available on the tracker breadboard. Component notations refer to the schematic number shown.

3.3.1 Acquisition Sweep (Drawing No. 4706058 - Figure 11)

The acquisition sweep amplitude determines the total field of view covered in the acquisition mode. By setting the two channels independently, a rectangular or square field of view may be scanned. Adjusting the acquisition sweep currents with R1 and R3 to 20 ma peak to peak will establish approximately a 5 x 5 degree field of view. Final adjustment for the desired field of view can be made with a rotary table setup. R2 and R4 are used to balance the sweep amplifiers. These potentiometers should be set for minimum distortion or clipping. The acquisition sweep can be observed at the same point as the track sweep with the system in the acquisition mode. The desired waveforms are shown in Figure 23.

3.3.2 Track Sweep (Drawing No. 4706338 - Figure 14)

The desired track sweep current waveform is shown in Figure 24.

Potentiometers R1, R2, R3, and R4 are used to adjust the slope of the trailing edge of the sweep triangle. This adjustment should set the sweep return duration equal to the time duration of the first portion of the waveform. Potentiometers R14 and R30 should then be adjusted to balance the positive and negative portions of each channel for equal amplitudes. The track sweep peak amplitude is then adjusted by the proper selection of resistors R10 and R38. The desired peak amplitude is determined by the deflection sensitivity of the system (75 ma/in) and the aperture diameter used. This peak amplitude is 1.9 ma. The track sweep current waveform is best observed by placing a 50- to 100-ohm resistor in series with the deflection coil ground return and observing the voltage on a suitable oscilloscope. The instantaneous field of view obtained can be then measured by tests on a rotary table.

3.3.3 Switchover Tracking Gates (Drawing Nos. 4706340 and 4706333 - Figures 16 and 18)

The azimuth and elevation tracking gates must be set to occur in the time interval when the raster scan crosses the undeflected instantaneous field of view of the tracker. These settings are made by displaying both the acquisition sweep current and the associated tracking gate on a dual trace oscilloscope. The tracking

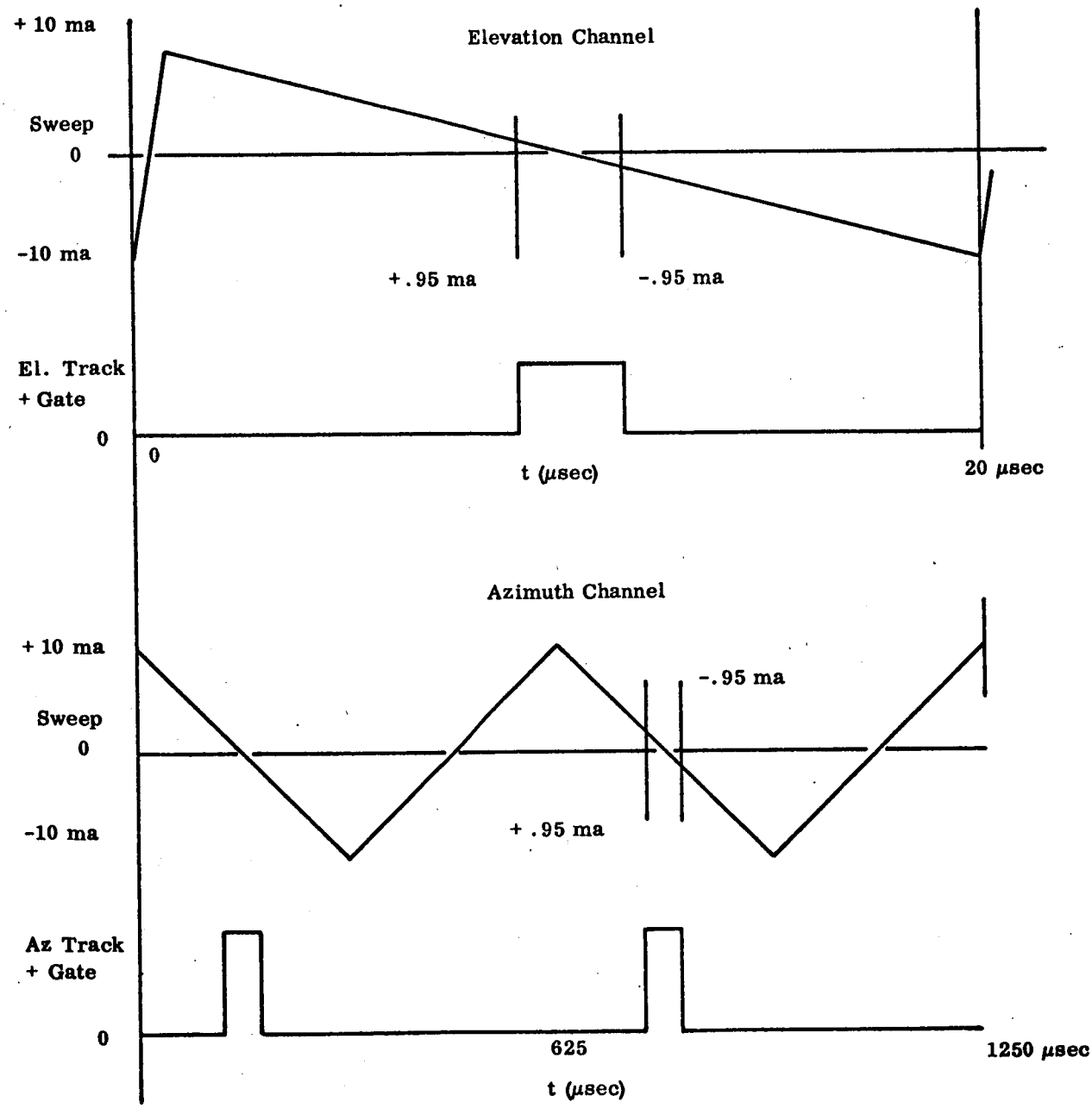

Figure 23 Acquisition Alignment Waveforms

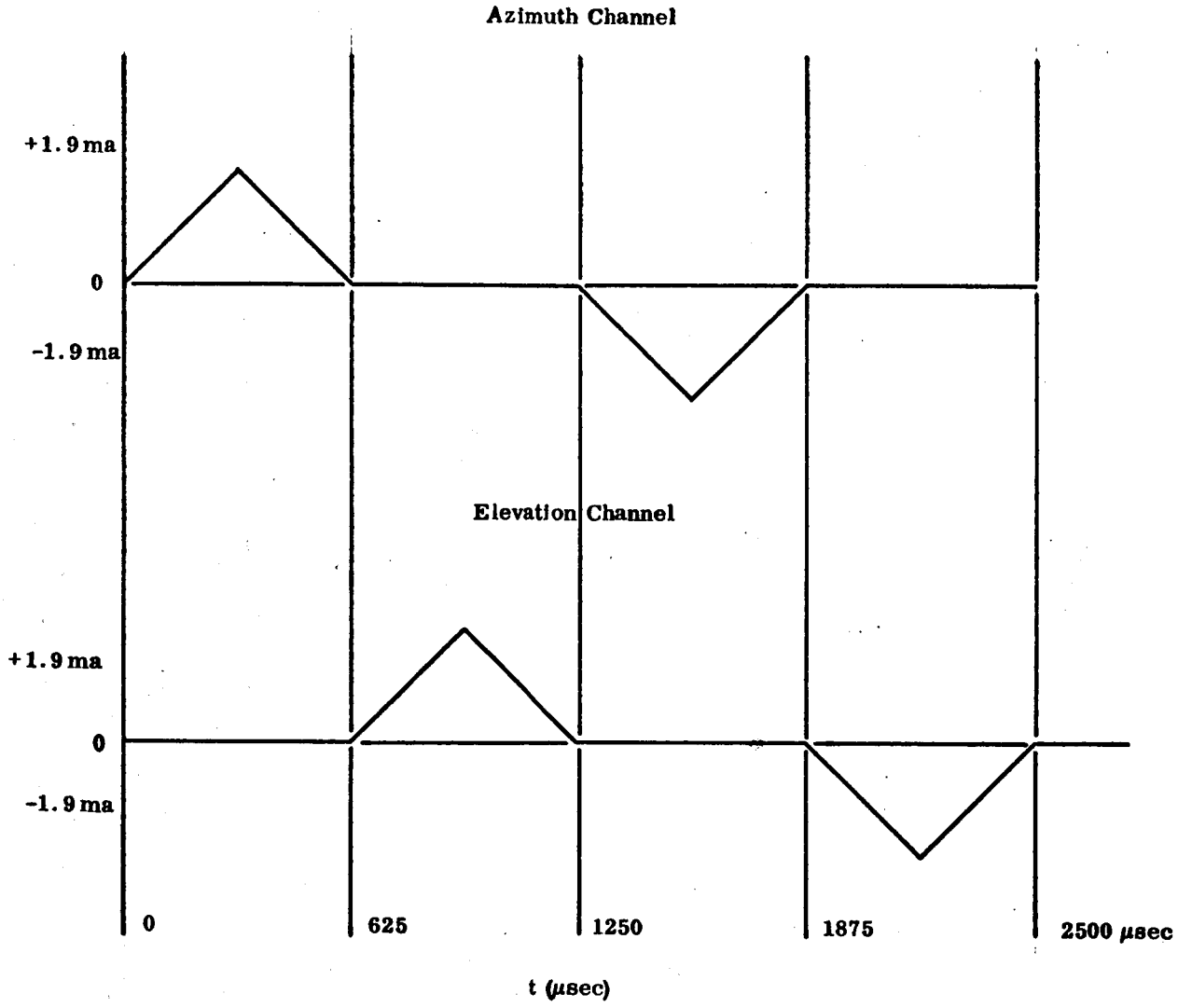

Figure 24 Track Sweep Waveforms

gate should be centered in time over the point where the current passes through zero. The gate width can be set to allow switchover to track at any desired point on the tracker error curve. For smoothest switchover, the gates should be set to switchover at the peak of the track mode error characteristic curve. Theoretically, to switchover at the edge of the instantaneous field of view, the gate width should be adjusted to start at the point where the acquisition sweep amplitude is one-half the peak track sweep amplitude. The gate should end where the acquisition sweep current amplitude of the opposite polarity is one half the peak track sweep amplitude. The resulting azimuth gate is approximately 30 μsec wide and the elevation channel gate is approximately 1890 μsec wide. The switchover gates can be reset to provide the best dynamic switchover response in actual use.

3.3.4 Amplifier Threshold Adjustment (Drawing No. 4706765 - Figure 7)

The threshold adjustments are to be made while viewing the desired magnitude simulated star source. With the system in the acquisition mode, the acquisition threshold control should be advanced only to the point required to provide a saturated output. The track threshold control is set to provide a saturated output at one-half the peak value of the track mode video. The amplifier video signal should not be connected to the electronics unit for these adjustments. The acquisition threshold control must also be sufficiently advanced to provide an output which is sufficient to trigger the star presence circuit while operating in the track mode.

3.3.5 Mounting Boresight Alignment

The tracker breadboard has incorporated an offsetting adjustment which can be used for final alignment of the tracker optical axis with the axis of the platform to which it is mounted.

After aligning the breadboard sensor unit axis with that of the platform as closely as possible mechanically, a star source should be placed along the boresignt axis. To place the tracker optical line of sight along this axis, the offset currents should then be adjusted to null the error voltages generated by the tracker. The error voltages should not be connected to the platform servo system for this adjustment.

4.0 TEST RESULTS

The following data was obtained during the final testing of the breadboard tracker using the test setup discussed below.

4.1 Simulated Star Source

A 9 foot-lambert, 2360-degrees K light source placed 25 feet from the tracker lens was used to simulate the actual star. Apertures of various diameters were used to provide the various star magnitudes. The aperture diameters to be used were found by calculating the light energy at the lens for an 11,000 degrees K star using an S-20 photocathode and adjusting the aperture diameter to provide an equivalent amount of energy from the 2360 degrees K source. A graph of star magnitude versus aperture diameter for this particular S-20 tube and optics is given in Figure 25.

4.2 Measured Fields of View

Acquisition =

4 degree 41 min. in elevation

4 degree 35 min, in azimuth

Track =

Modulated field of view = 85 arc min

Instantaneous field of view = 28 arc min

4.3 Acquisition Mode Error Voltages

The error voltages obtained in the acquisition mode were constant dc measured across a resistive 47-K ohm load.

Elevation:	up	=	+ 6.29 v
	down	=	- 6.20 v
Azimuth:	left	=	-6.20 v
	right	=	+6.1 v

4.4 Track Mode Error Voltages

The graphs of Figures 26 through 29 show the error curves for angular errors from null along the azimuth or elevation axis. The curves are plotted for

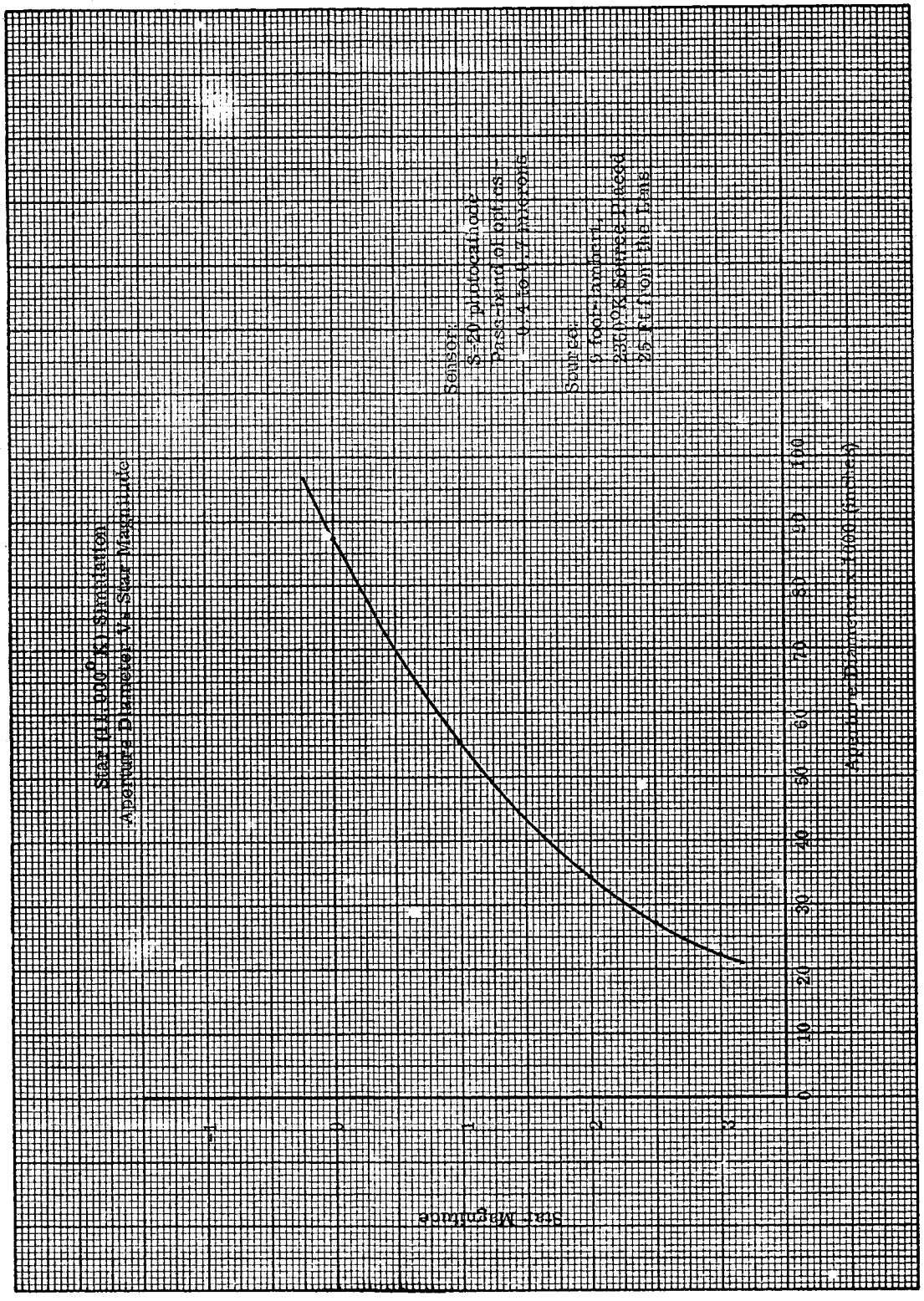

Figure 25 Star (11,000°K) Simulation Aperture Diameter Versus Star Magnitude

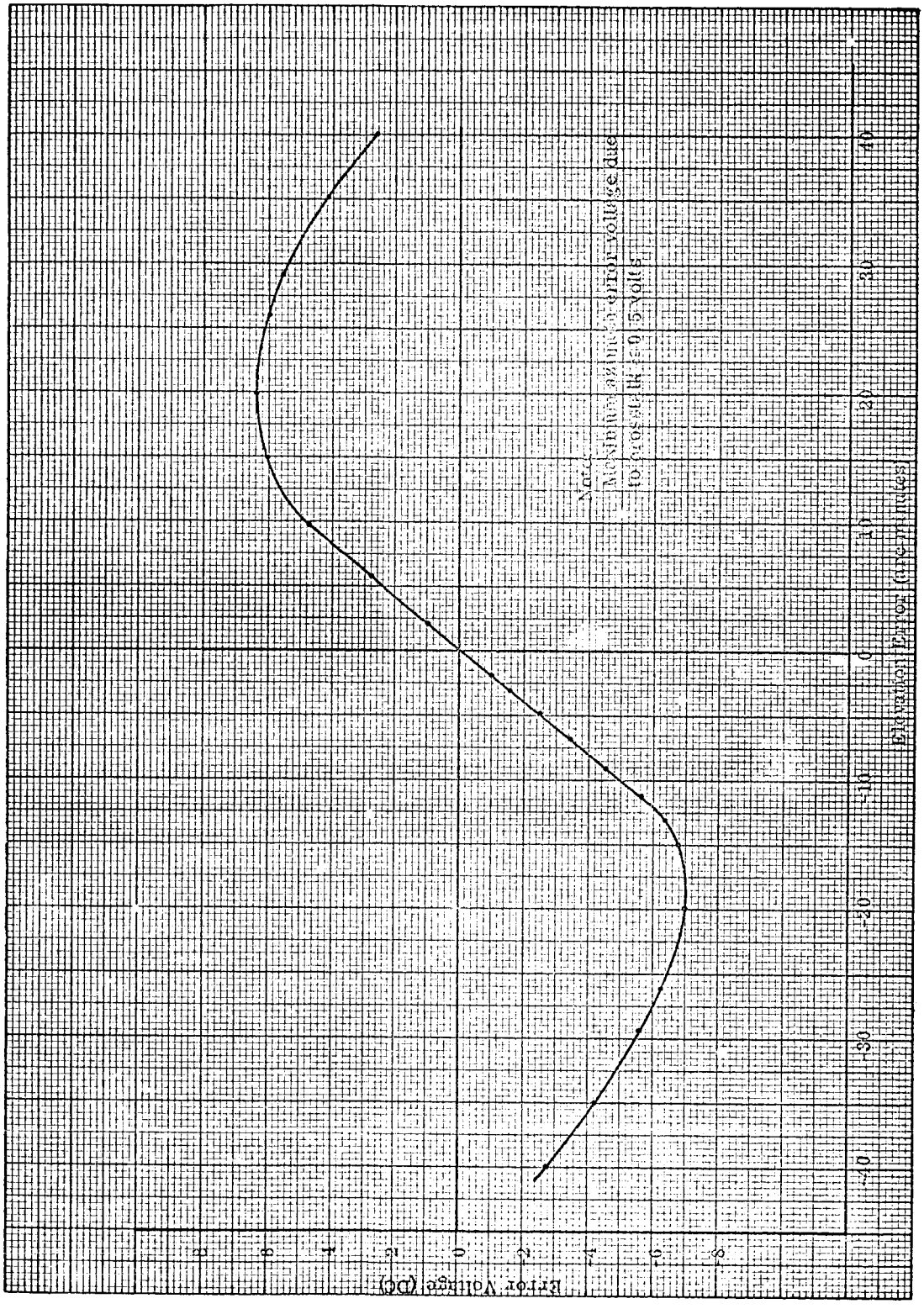

Figure 26 Error Voltage Versus Elevation Angular Error for Simulated 1.0^M Star

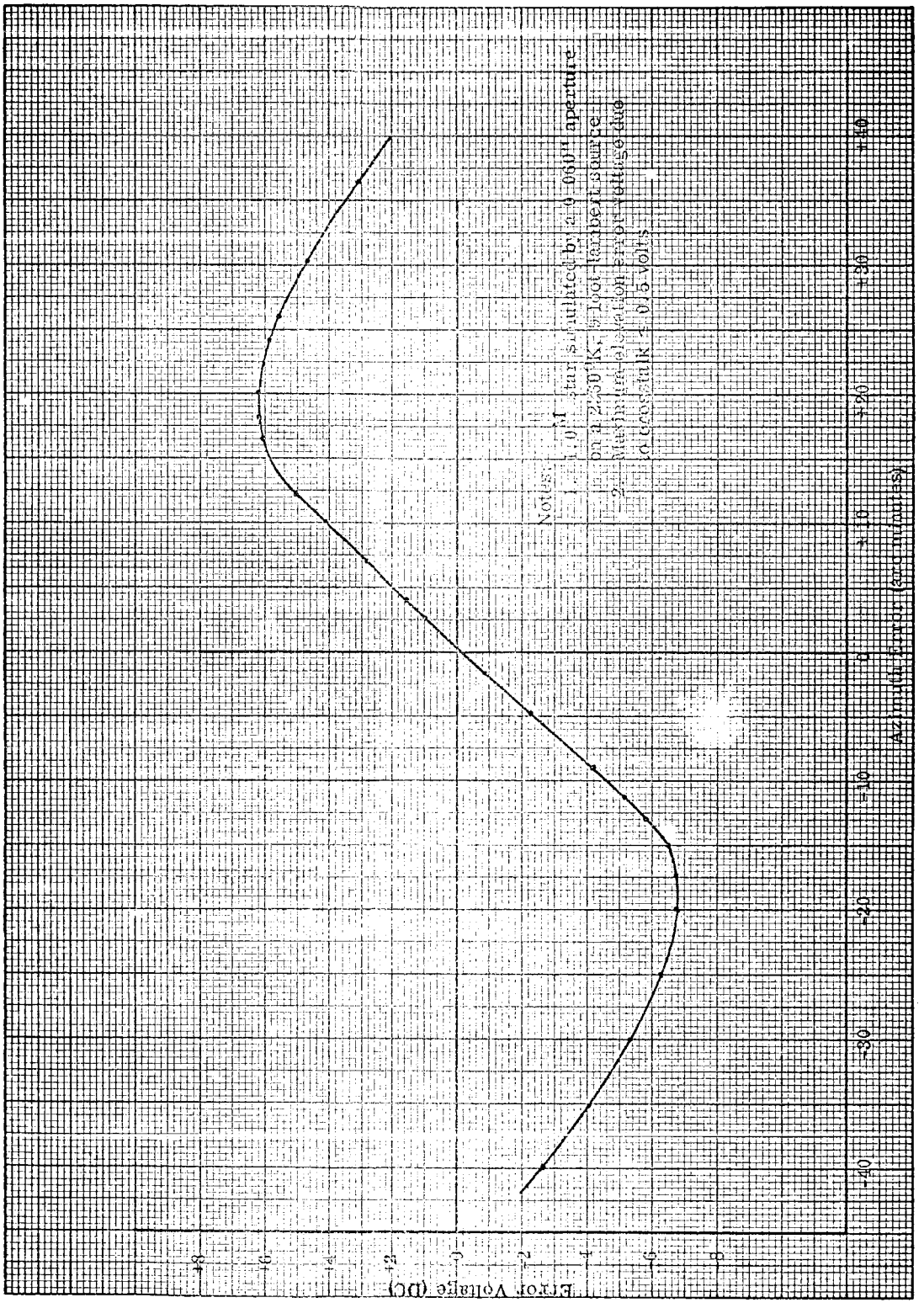

Figure 27 Error Voltage Versus Azimuth Angular Error for Simulated 1.0^{M} Star

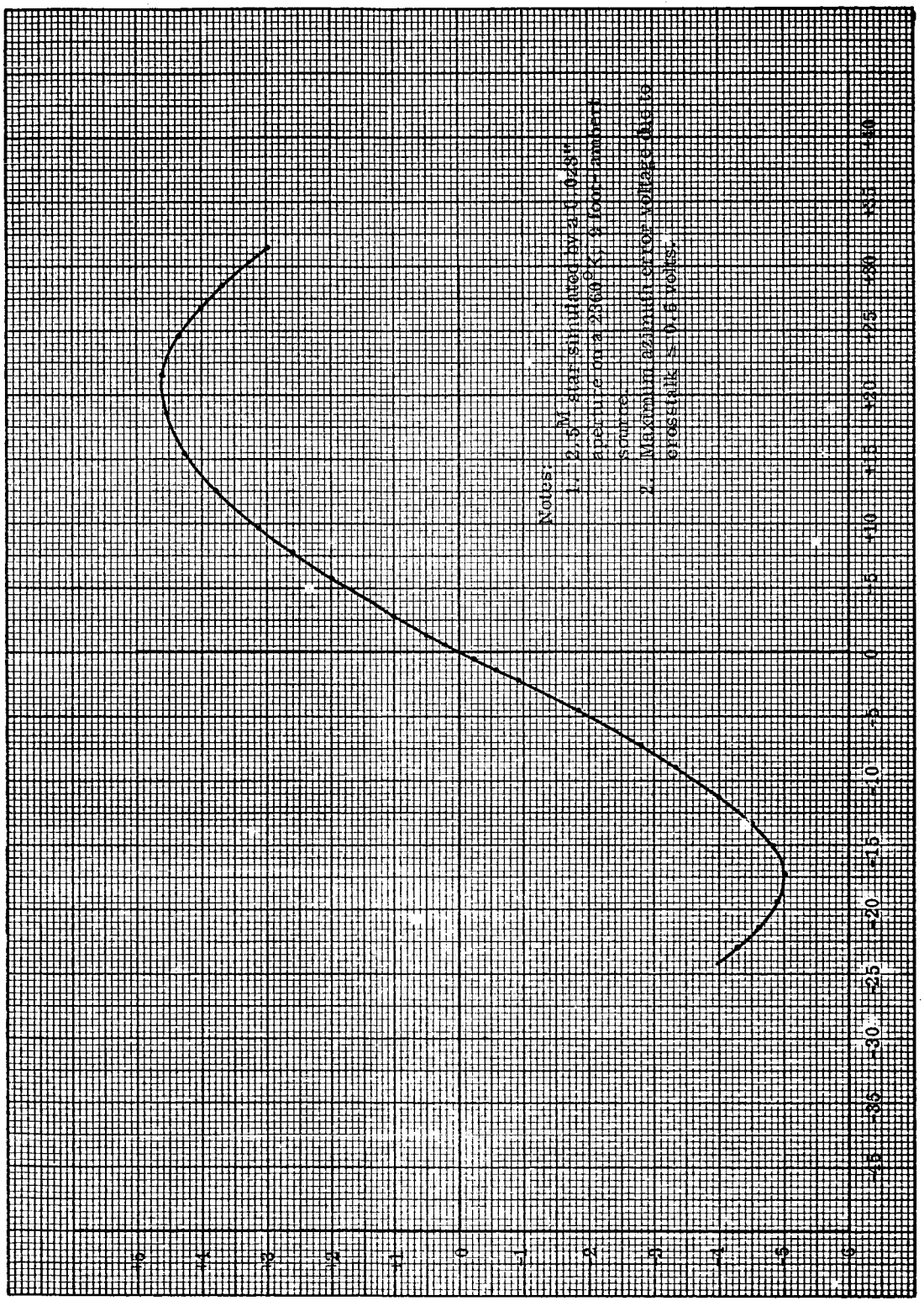

Figure 28 Error Voltage Versus Elevation Angular Error for Simulated 2.5^M Star

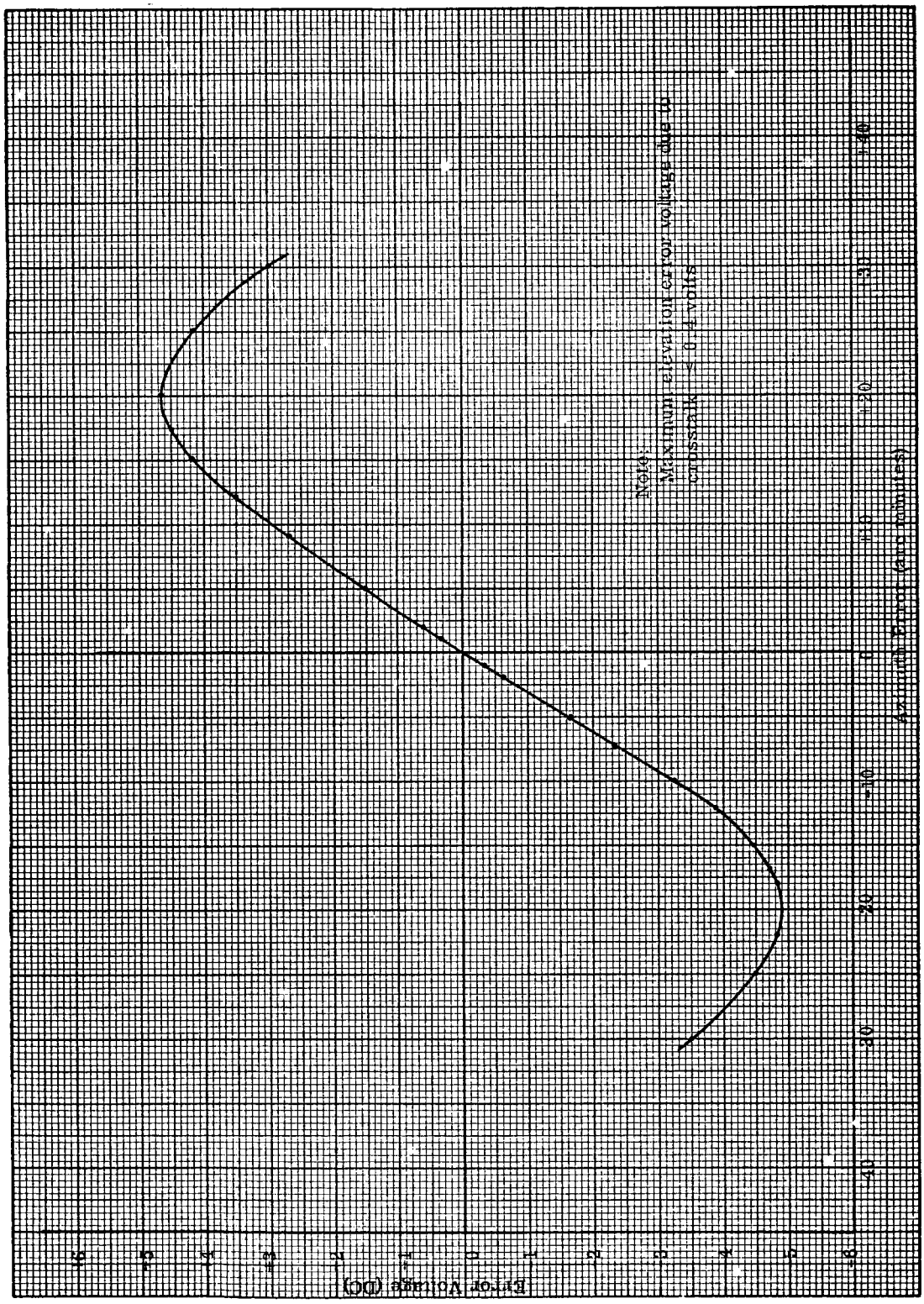

Figure 29 Error Voltage Versus Azimuth Angular Error for Simulated 2.5M Star

a $+1^M$ and $+2.5^M$ simulated star source. The decrease in slope of the error gradient for a $+2.5^M$ star is due to the decreased energy available in the track video pulses fed to the track error generators. The polarity of the error voltage obtained can be reversed by interchanging the deflection coil connections.

The error voltage filter response curve obtained is shown in Figure 30.

4.5 Tracking Accuracy and Signal-to-Noise Ratios

All calculations of accuracy and signal-to-noise measurements were made from error generator output recordings using an rms value of noise which is obtained by taking 1/6 of the maximum peak-to-peak noise excursions.

Tracking accuracy is found by determining the equivalent angular error represented by the rms null noise using an error gradient of 0.4 volt per arc min for a 1^M and 0.3 volt per arc min for the $+2.5^M$ star.

The following data was obtained:

Aperture Size	Tracking Accuracy	S/N Ratio at 1 Arc Min Off Null
0.060 in (1^M)	4.9 arc sec	11
0.040 in (2^M)	6.2 arc sec	12
0.028 in (2.5^M)	8.1 arc sec	10

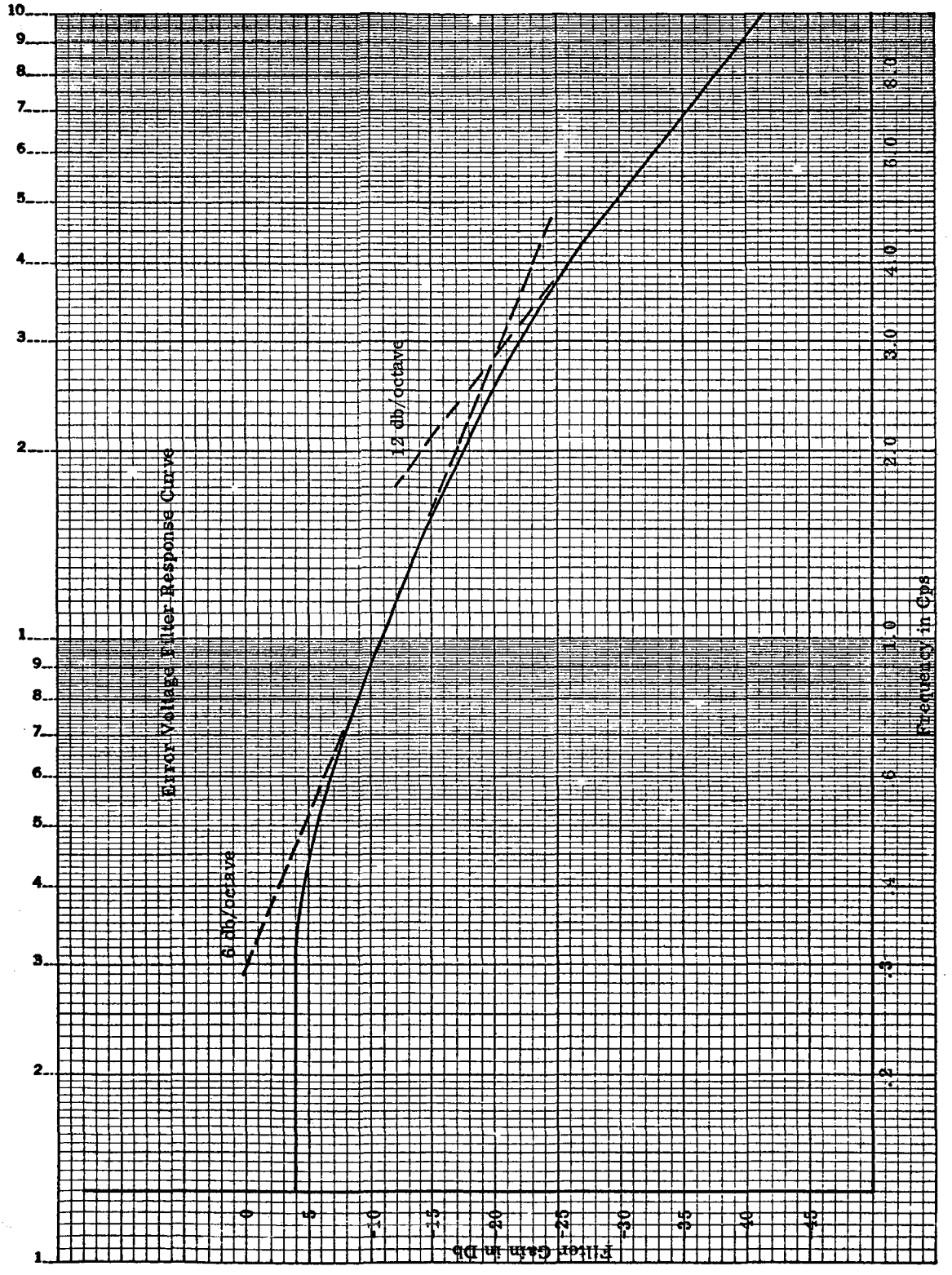

Figure 30 Error Voltage Filter Response Curve