NASA SP-5003

N64-16859

TECHNOLOGY UTILIZATION NOTES

Technology Utilization Division

SELECTED WELDING TECHNIQUES

From

GEORGE C. MARSHALL SPACE FLIGHT CENTER

Manufacturing Engineering Division

Huntsville, Alabama

NATIONAL AERONAUTICS AND SPACE ADMINISTRATION

FOREWORD

THE National Aeronautics and Space Administration has launched a program to apply the scientific and technical knowledge from its vast research and development program for the benefit of all mankind.

The Administrator of NASA has therefore established an Industrial Applications Program under the Office of Technology Utilization responsible for "The rapid dissemination of information . . . on technological developments . . . which appear to be useful for general industrial application." From a variety of sources, such as the NASA field centers and NASA contractors, space-related technology is identified, screened for potential industrial use, documented, and conveyed to the industrial community. Thus, American industry will receive information from the nation's space program about the latest developments in operating techniques, management systems, materials, processes, products, and analytical and design procedures.

This publication is part of a series which will provide technical information useful in fabrication and assembly shops. The welding tools and techniques described here have been selected from among those employed in the welding of aluminum sheet and plate at NASA's George C. Marshall Space Flight Center.

Additional information may be obtained from:

The Director of Technology Utilization
National Aeronautics and Space Administration
Washington 25, D.C.

NOTICE

This document was prepared under the sponsorship of the National Aeronautics and Space Administration. Neither the United States Government, nor NASA, nor any person acting on behalf of NASA:

A. Makes any warranty or representation, express or implied, with respect to the accuracy, completeness, or usefulness of the information contained in this document, or that the use of any information, apparatus, method, or process disclosed in this document may not infringe privately-owned rights; or

B. Assumes any liabilities with respect to the use of, or for damages resulting from the use of, any information, apparatus, method, or process disclosed in this document.

CONTENTS

	PAGE
FOREWORD	I
SEAM TRACKER AND PROXIMITY CONTROL UNIT	1
BACKUP BARS FOR WELDING	5
VACUUM-TYPE BACKUP BAR	11
FIBER-GLASS TAPE FOR BACKING UP WELDS	13
CLAMPING TOOL FOR FUSION WELDING	15
MAINTAINING ALINEMENT BY TACK WELDING	19
GUIDE TIP FOR FEEDING FILLER WIRE	21
IMPROVED METHOD FOR SIGMA SPOT WELDS	23

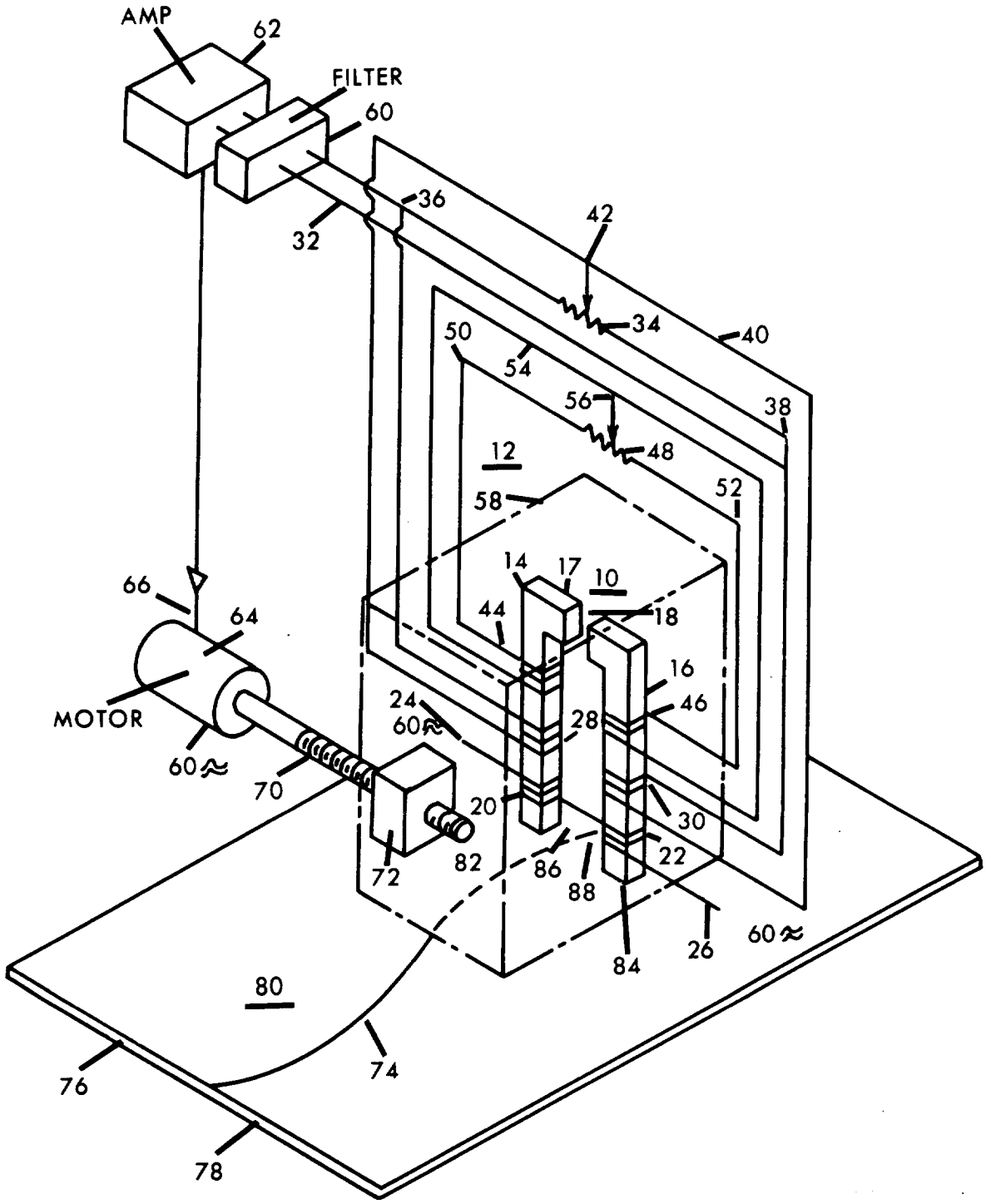

FIGURE 1.—Drawing of seam tracker.

Seam Tracker and Proximity Control Unit

Seam Tracker and Proximity Control Unit Prove Effective in Welding of Heavy-Gage Aluminum

Innovations by HERSHEL M. NANCE

Marshall Space Flight Center specifications for welding large, single tank boosters are rather stringent, calling for no undercutting, no cracking, complete fusion, and a relatively small amount of porosity. In order to maintain design tolerances it is necessary to rely on electronic positioning controls to keep the torch on the joint to be welded. When tests of certain available systems proved conclusively that they were not adequate, Marshall personnel set out on their own development programs. The problems were many, but the results were gratifying. It is believed that proximity and seam tracking controls adequate for most anticipated applications are now on hand.

SEAM TRACKER

The tracking device described here provides an-improved means for guiding a welding head along a seam separating two pieces of metal.

Figure 1 shows a tracking transducer 12 constructed with two magnetic core, or leg, members 14 and 16 positioned side-by-side but separated at the sensing end adjacent seam 74 by a small distance (e.g., ½ inch). Associated with each core member is a means (such as provided by coils 20 and 22) for inducing a low-frequency flux through the core members. An output, taken from coils 28 and 30, connected to provide opposite phase voltages, provides an error signal which shifts phase each side of zero error. The error signal is filtered in filter 60 to pass only the input frequency and amplified in amplifier 62 to drive electromechanical means, such as two-phased servomotor 64, to reposition the transducer sideways to a balanced position where core members 14 and 16 are equidistant from the seam 74, which is being tracked. At this point the error signal becomes zero. As stated previously, the signal input to the flux inducing means is quite low in frequency and is generally in the range between 25 and 100 cycles (e.g., 60 cycles) and upward to 1,000 cycles.

The accuracy of operation of the device is remarkable and, generally, the tracking error is less than the width of a fine pen line even when there is a poor fit between the work parts of the seam. (See figs. 2 to 4.) Further, the transducer appears quite insensitive to the magnetic effects of electrical welding and cutting torches attached to or positioned by the transducer. Not only is improved tracking achieved with low-

FIGURE 2.—Overall view of metal-inert-gas welding equipment including the seam tracker, the proximity control unit, and a closed-circuit television hookup.

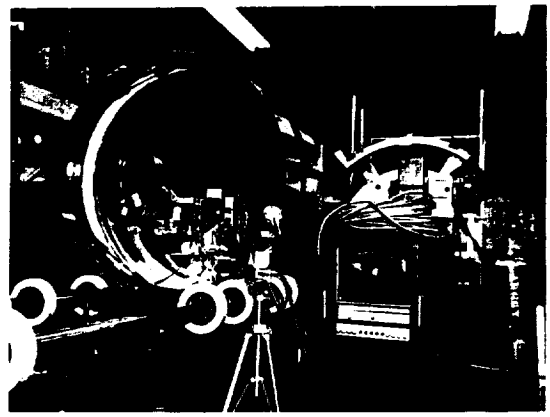

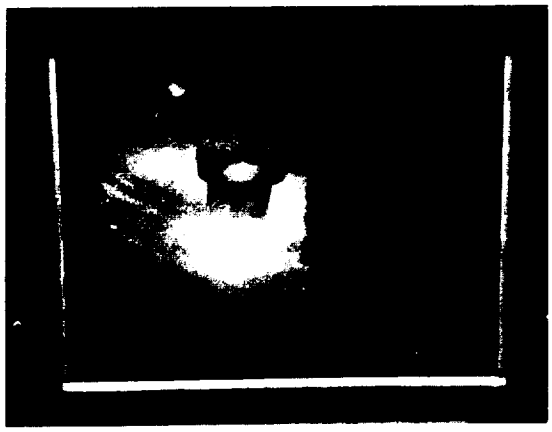

FIGURE 3.—Closed-circuit television closeup of the seam tracker and the proximity transducer.

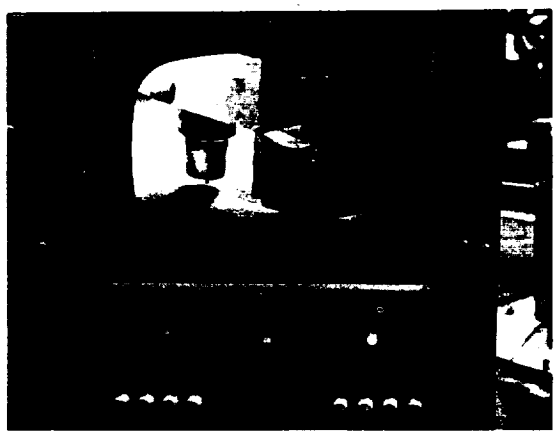

FIGURE 4.—Closed-circuit television closeup of a metal-inert-gas weld in progress using the seam tracker and the proximity transducer.

frequency operation such as 60 cycles, but, most significantly, this feature also makes the tracking transducer adaptable for use with standard two-phased servomotors, thereby eliminating the need for the modulators and demodulators commonly employed in tracking devices.

PROXIMITY CONTROL UNIT

At the Marshall Center a proximity control unit has also been incorporated with the seam tracking apparatus. The general purpose of the proximity transducer is to maintain an arc welding torch at a predetermined distance from the metal to be welded. The transducer is mounted on the torch and is subject to whatever movement the torch is subjected to.

The transducer is composed of five coils, four of which form the seam tracking pickup (not electrically connected to the proximity coil), as shown in fig. 5, and a single pancake coil

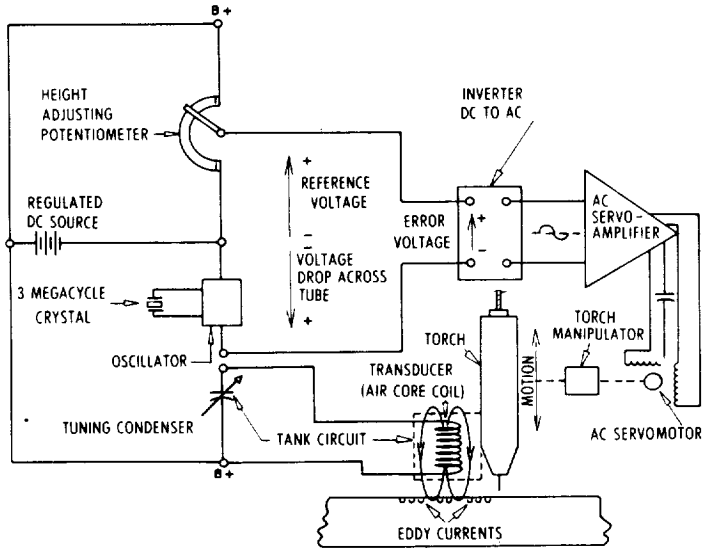

FIGURE 5.—Block diagram of the proximity control unit.

(proximity) located in the bottom face of the transducer. The action between the proximity sensing coil and the pieces to be welded is similar to that of a transformer, with the proximity coil as the primary and the workpieces as a short-circuited secondary winding.

As the proximity coil comes closer to the work, there is an increase in the eddy currents generated in the workpieces. These eddy currents oppose the magnetic flux which produces them; correspondingly, there is increased opposition to the magnetizing current, effectively detuning the oscillator tank circuit from its natural frequency. This results in a change in the d.c. voltage drop across the oscillator tube. Thus, a d.c. voltage is obtained which is a function of the proximity.

This voltage is compared with a reference voltage, resulting in an error signal. The signal is fed to the amplifier and servosystem to produce motion reducing the error signal to zero. When the error signal is zero, the transducer and the welding torch are in position at the preselected height above the work. (See fig. 6.)

The transducer may be used on other machine devices which require that a predetermined distance be maintained between the tool and the metal. The sensing coil is flat in shape and may therefore be incorporated in the same small enclosure with the seam-tracking transducer. It utilizes a crystal controlled oscillator and has a fairly stable frequency.

FIGURE 6.—Closeup of metal-inert-gas welding equipment showing the seam tracker and the proximity transducer head.

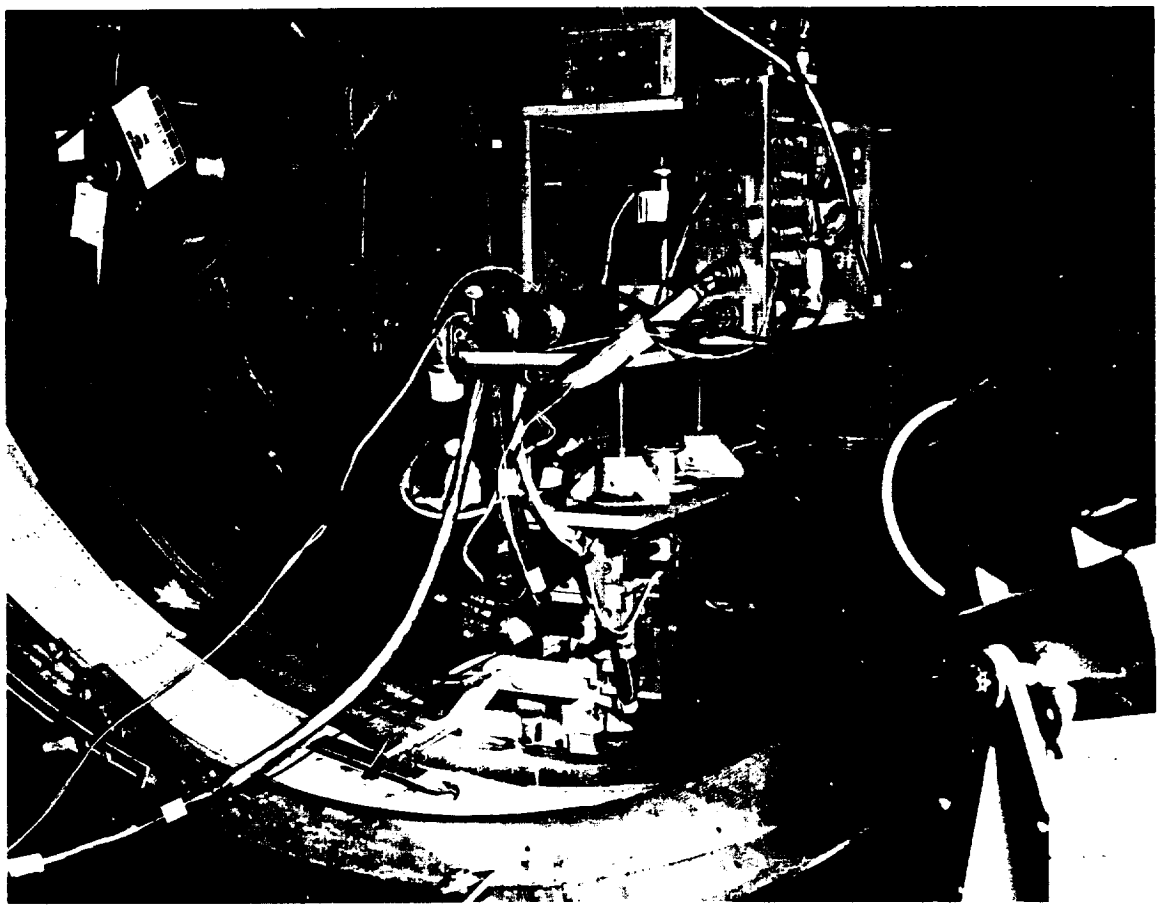

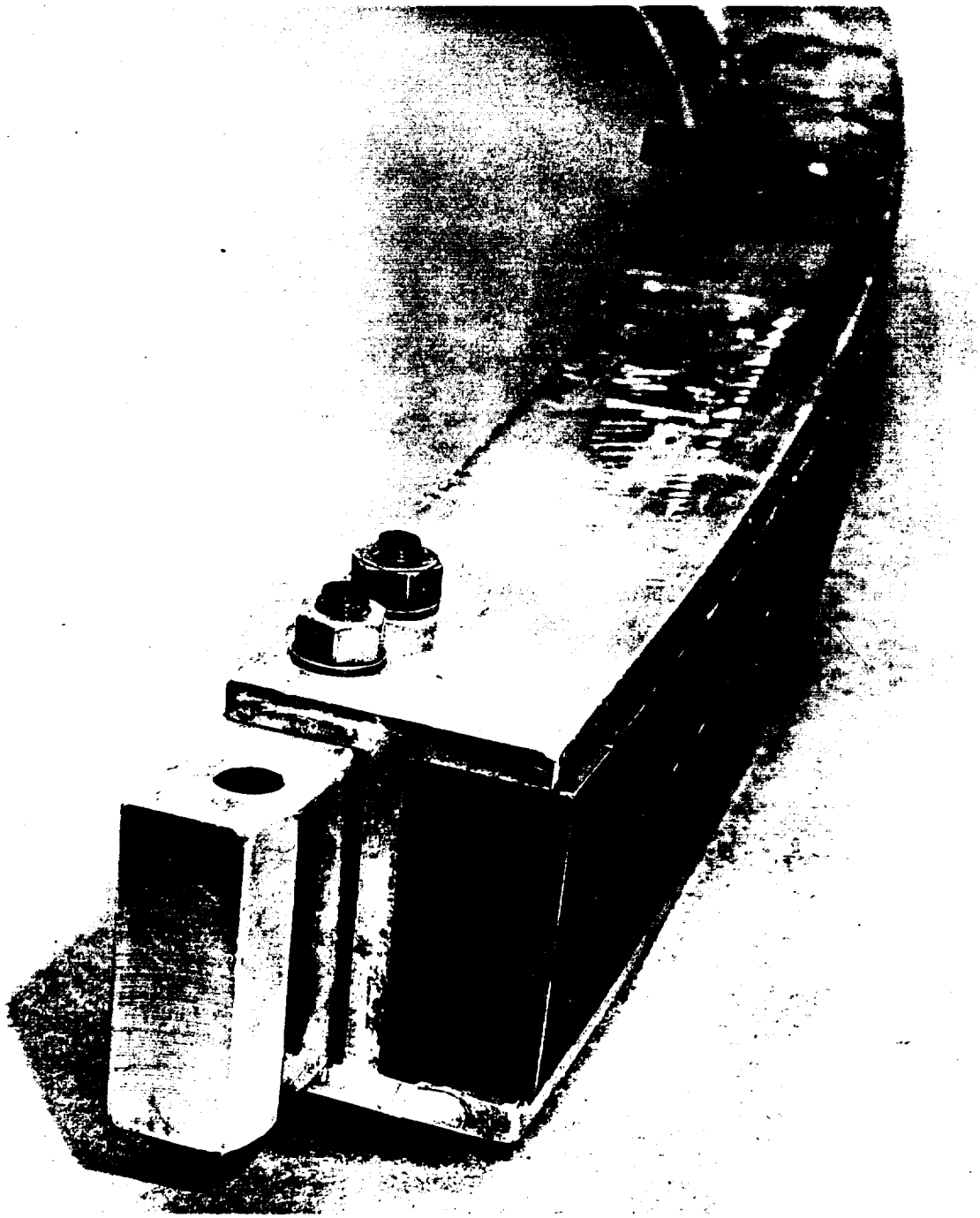

FIGURE 7.—A 41-inch segment of an "H" member showing the end of the inflatable bladder and the laminated ½-inch stainless steel, flexible backup bar dovetailed into silicone rubber.

Backup Bars for Welding

Two Segmented Back-up Bars for Welding Meet Most Needs for This Type of Equipment at Marshall

Of the known devices providing a backup bar function, several have disadvantages that the present bars overcome. Some devices employ a continuous ring bladder, designed and built for one particular diameter. Others consist of separate sections bonded to rubber or a contact material that has been sawed to achieve a serpentine effect. Many require the use of a control "spider" structure for support. For tanks with diameters in the range of 20 feet and larger, such a structure becomes excessively expensive and cumbersome in that it is generally built for one particular diameter and requires extensive modification in case of diameter change. In addition, the "spider" requires floor space whether or not it is in use.

Although most such designs are generally expensive to build, must be handled carefully, and cannot be repaired easily, the two bars described here are adjustable to any diameter and overcome the other disadvantages as well.

½-INCH SEGMENTED BAR

Innovation by NEIL C. MARTIN and WILLIAM J. FRANKLIN

The short segments of the backup bar described here are dovetailed into silicone rubber strips to form a tool that is very flexible and that may be repaired quickly and easily. The bar (fig. 7) was designed for use in the welding of large cylindrical structures, although the principal of operation applies to any diameter, including straight longitudinal welds. The tooling depicted here, which includes the use of rigid "H" members (fig. 8), is presently being used at Marshall Space Flight Center for consumable electrode inert gas (MIG) or tungsten electrode inert gas (TIG) circumferential welding of large aluminum tanks.

Both this bar and the one shortly to be described can be assembled on simple supporting devices such as vacuum chucks (fig. 9) attached to the tank skin until the bladders are inflated. (See figs. 10 and 11.) At the same time, the "H" member, which is in segments approximately 41 inches long and 3 inches wide, becomes a compression ring and the entire backup bar assembly can become self-supporting, depending upon the friction against the tank skin. When not in use, the assembly may be broken down into sections and stored, allowing valuable floor space to be used in other ways.

FIGURE 8.—Drawing of cross section of "H" member.

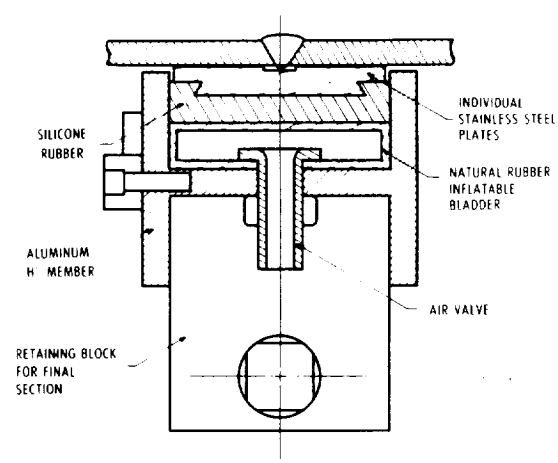

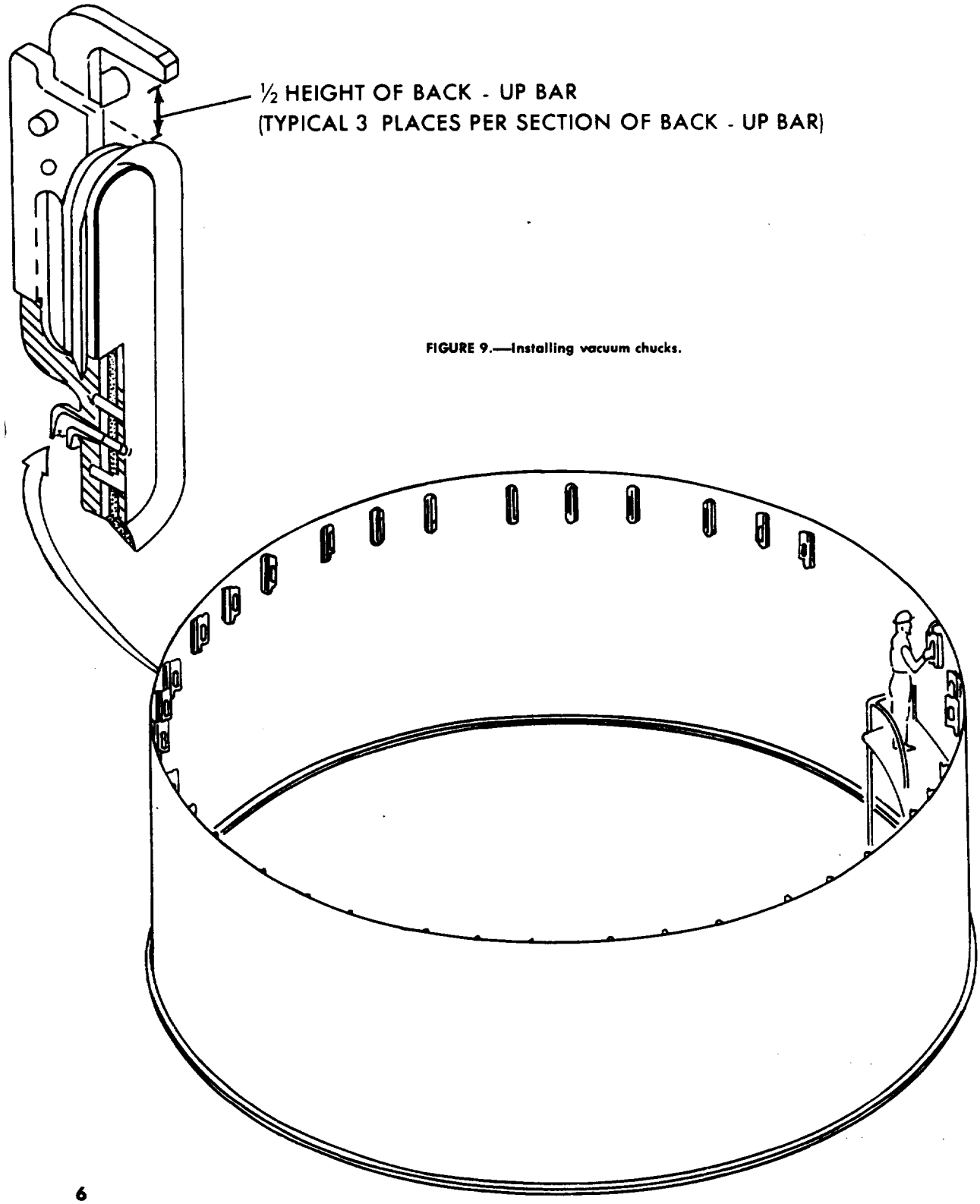

FIGURE 9.—Installing vacuum chucks.

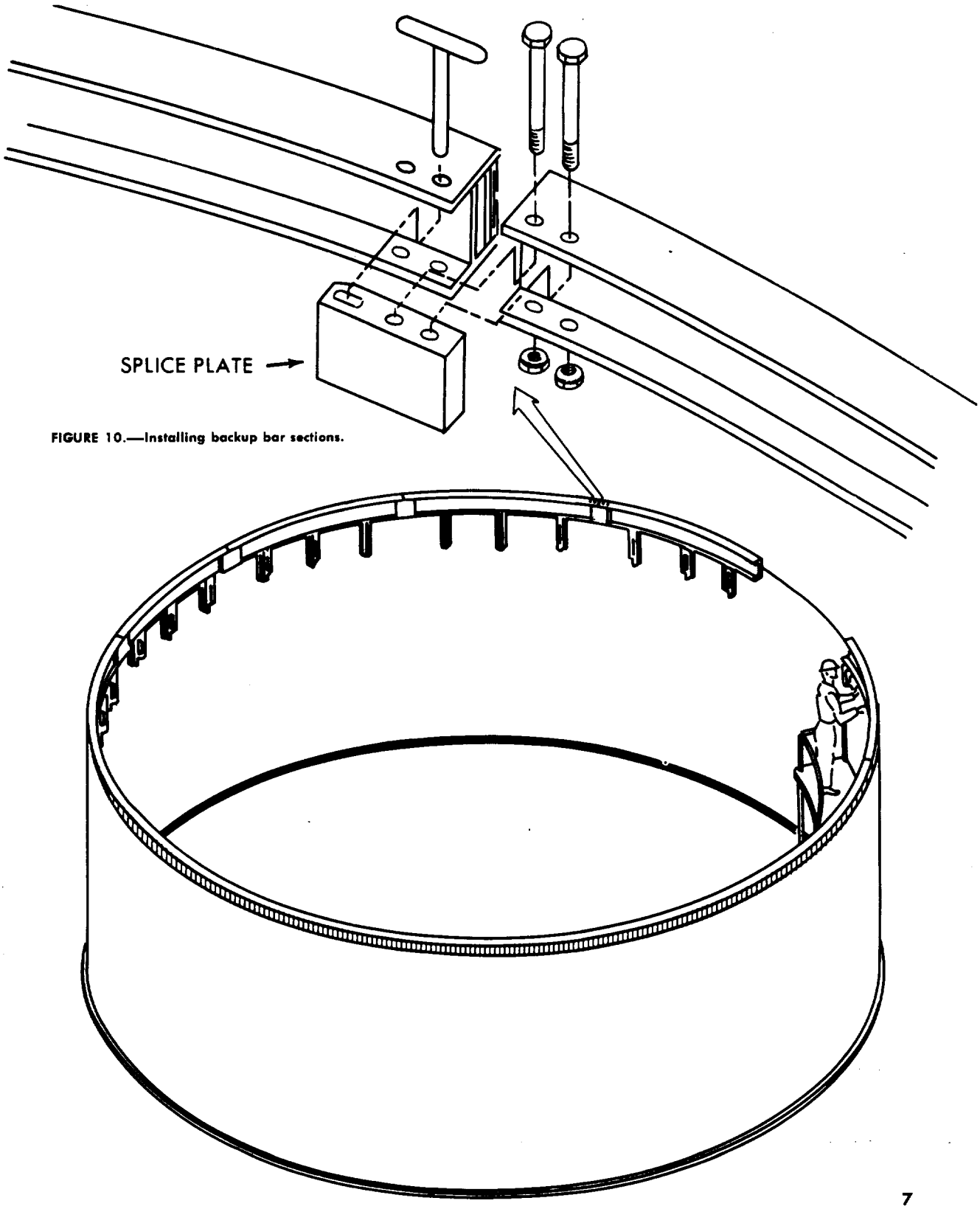

FIGURE 10.—Installing backup bar sections.

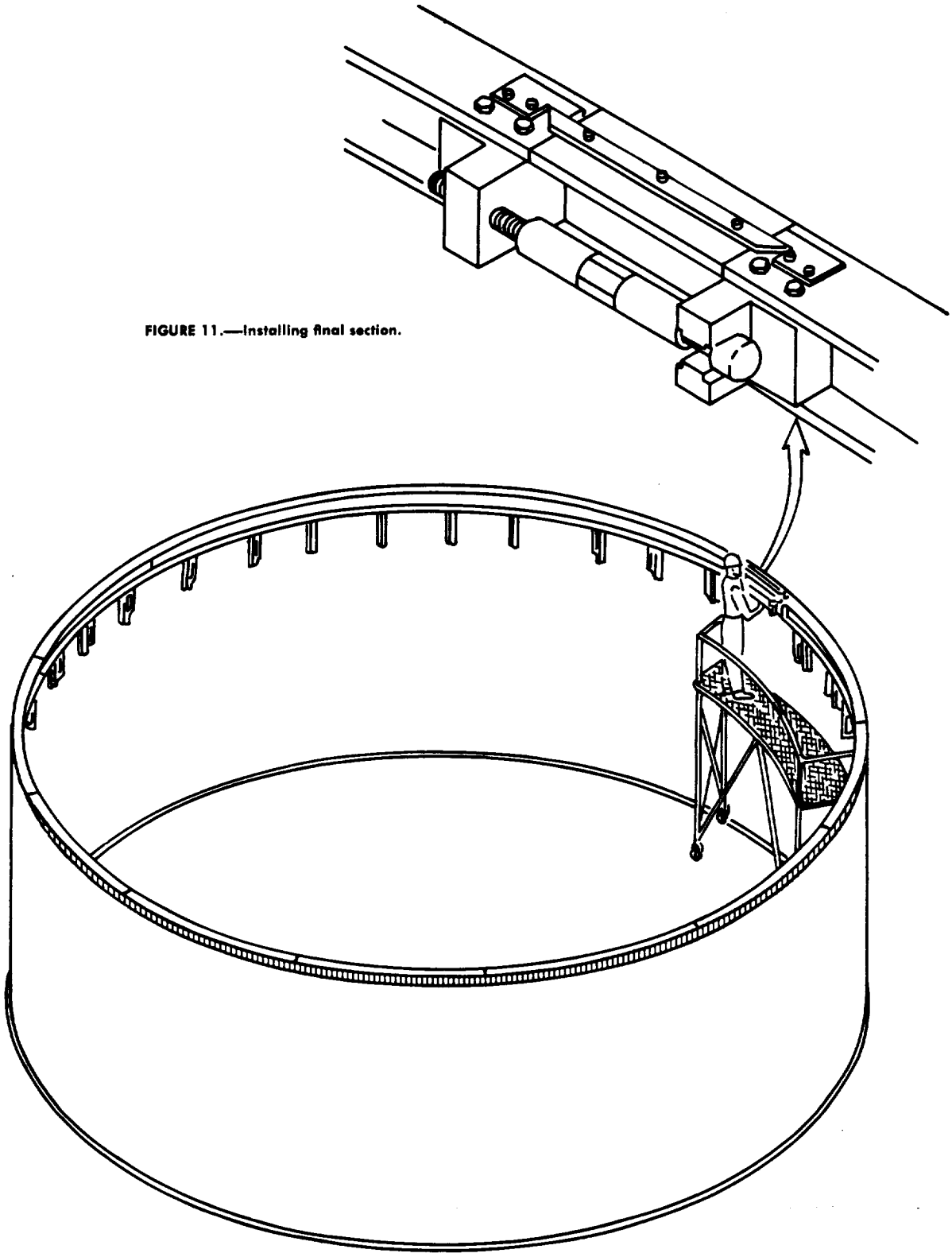

FIGURE 11.—Installing final section.

0.040-INCH SEGMENTED BAR

Innovation by AUBREY S. DRUMMOND

This modular weld backup bar is used for performing experimental metal-inert-gas or tungsten-inert-gas welds on large cylindrical aluminum tanks. The development of this tool was a direct outcome of requirements for a method of producing quality welds in large cylindrical fuel tanks.

The bar is made of laminated 0.040-inch stainless-steel segments bonded together with silicone rubber into sections approximately 41 inches long, 1 inch thick, and 2 inches wide. (See fig. 12.) It is made in sections so as to fit varied cylindrical surfaces simply by removing or adding sections as needed. Smaller sections may be added to close the separation gap.

The bar is unique because it is completely flexible (fig. 13), allowing it to conform to the surface or seam irregularities in the material to be welded. The tool also eliminates the necessity of fabricating a new bar with fixed dimensions for every cylinder size. When used with the "H" member, the bar becomes a compression ring that, due to the friction between the bar and the tank skin, becomes self-supporting. When not in use the bar may be broken down into sections and stored, freeing valuable floor space for other purposes.

Figure 14 allows a comparison of the 0.040-inch segmented bar with the ½-inch segmented bar.

FIGURE 12.—A 41-inch segment of an "H" member showing the end of the inflatable bladder in the laminated 0.040-inch stainless-steel, backup bar bonded to silicone rubber.

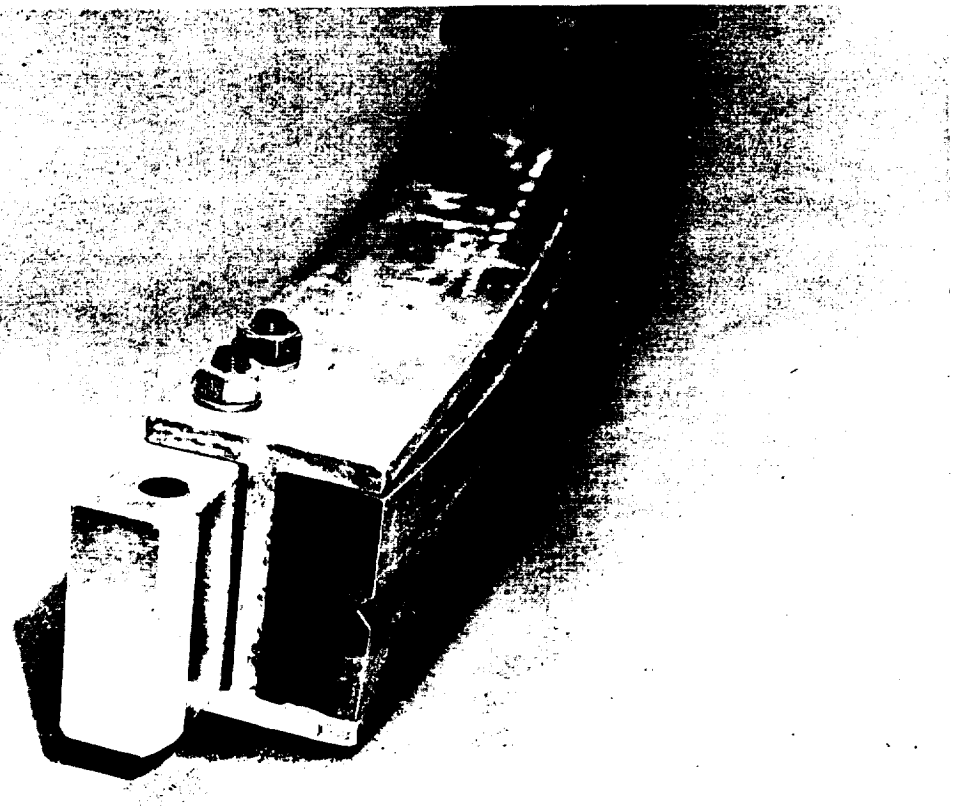

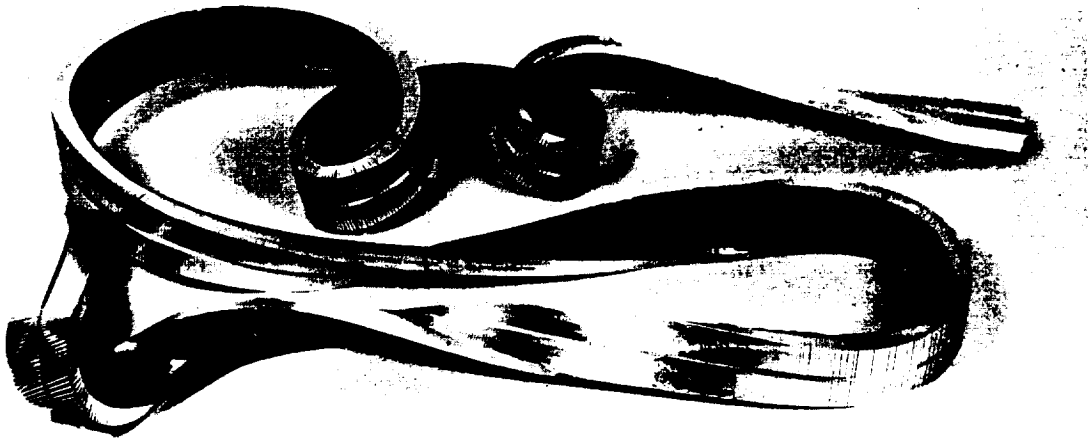

FIGURE 13.—Photograph showing flexibility of 0.040-inch stainless-steel backup bar.

FIGURE 14.—Segmented backup bars shown side by side. Note the two-piece construction of the 0.040-inch bar on the left as compared with the unit construction of the ½-inch segments on the right.

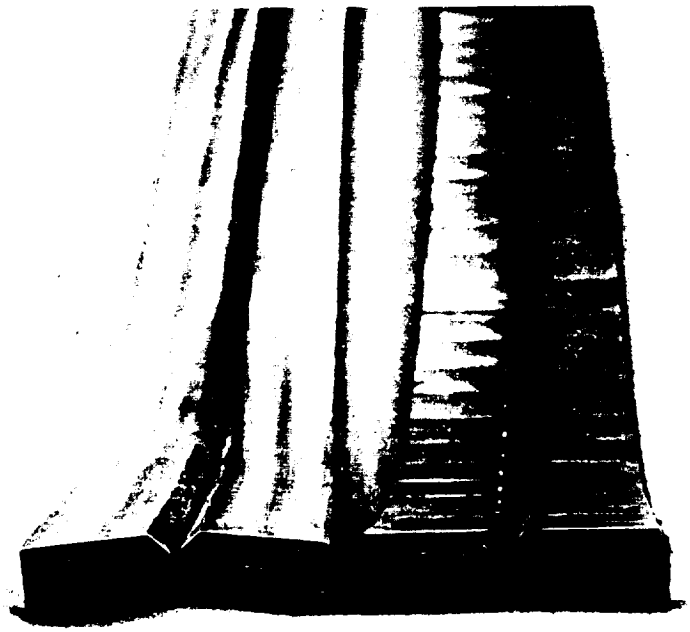

Vacuum-Type Backup Bar

A Special Vacuum-Type Backup Bar Facilitates Repairs in Normally Inaccessible Locations

Innovation by R. J. CARMODY

When inspection methods detect a faulty section of weld metal in a completed welded metal structure such a large cylindrical tank, it is necessary to repair the weld section in place. To accomplish an effective repair job, a backup bar is frequently necessary to retain the molten weld metal and prevent puddle runout. In 1960, the Manufacturing Engineering Division of the Marshall Center devised a portable backup bar well suited for this type of repair. (See figs. 15 and 16.)

Before this device was developed, it was necessary to adapt existing backup bars for each repair job, with a resulting loss of time.

The vacuum bar is 3 feet long, about 8 inches wide, and 1 inch thick, with a weight of about 30 pounds. The inner face consists of a rubber seal, fiber-glass vacuum chambers, and a row of small, grooved stainless-steel inserts which contact the weld bead. The outside of the bar is made of fiber-glass and has two carrying handles (fig. 17).

The bar is placed against the weld seam to be repaired, and the air is exhausted by a vacuum pump from the vacuum chambers in a matter of seconds. The bar then clings tightly to the structure by suction as long as needed. (See fig. 18.) When air pressure is introduced into the rubber tube behind the inserts, the inserts press tightly against the weld bead as required.

The bar is slightly flexible in order to fit the inner surfaces of a limited size range of large cylinders. With slight redesign it could be made flexible enough to fit the inner surface of any large cylinder. The same basic design could be used for smaller units.

FIGURE 15.—Vacuum backup bar showing the two vacuum sectors, stainless-steel backup segments, and the air pressure inlet.

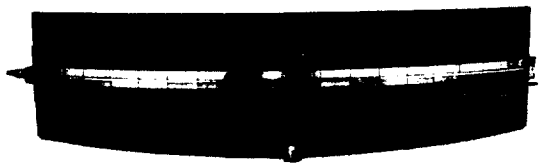

FIGURE 16.—Reverse side of vacuum backup bar showing the air pressure inlet and the vacuum lines entering the vacuum sectors.

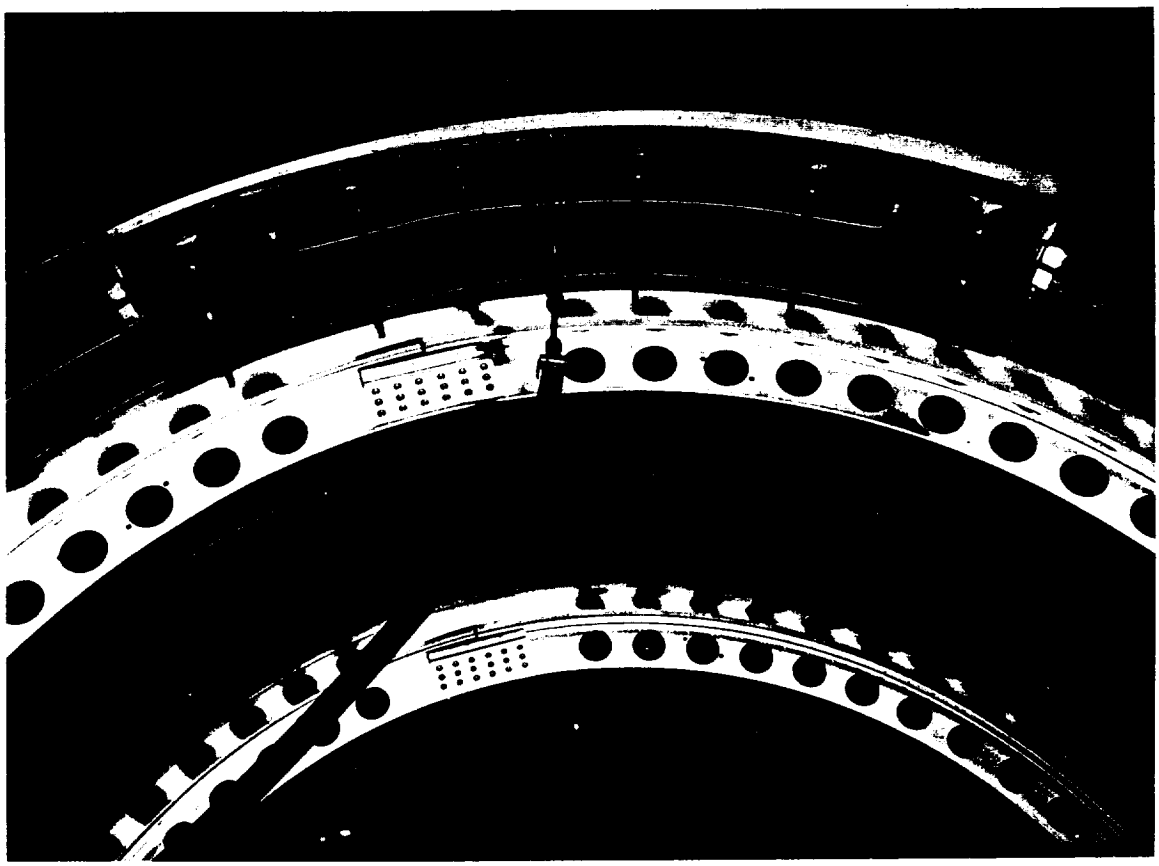

FIGURE 17.—Vacuum backup bar in place.

FIGURE 18.—Vacuum backup bar in position; shown supporting weight of a man.

Fiber-Glass Tape for Backing Up Welds

Tape Retains and Shapes the Molten Underbead Without Weld Contamination; Proves Useful for Backup Task

Innovation by JOHN CRESAP

Metal backup bars have inherent limitations in certain situations. In searching for materials to replace metallic backup bars, Marshall Space Flight Center has been testing fiber-glass tape as a substitute. This tape can be obtained with or without adhesive backing. When adhesive backed, it can be pressed into position straddling the seam. The nonadhesive type can be held securely with transverse adhesive tape strips.

Good results were obtained from silicone adhesive glass-cloth tapes for welding ¼-inch 2219–T87 aluminum-alloy plate (fig. 19). The molten underbead (at 900° to 1,200° F) was retained and shaped successfully by the tapes, with no weld contamination and with no adverse effects on weld quality or strength. An adhesive glass-cloth electrical tape was used as an additional support for the other tapes. (See fig. 20.)

The tapes can be obtained commercially in rolls up to 3 feet wide, and in various degrees of stiffness and closeness of weave. The widths used in these tests ranged between 1½ to 2 inches. These experiments showed the stiffer types to be the most satisfactory.

Preliminary tests have demonstrated that fiber-glass tapes are also suitable for metals other than aluminum, such as steel. There appears to be no plate thickness limitation when using the tapes. (See fig. 21.)

FIGURE 19.—¼-inch 2219–T87 aluminum-alloy plate welded with fiber-glass backup tape. The tape has been pulled back to expose the inner bead.

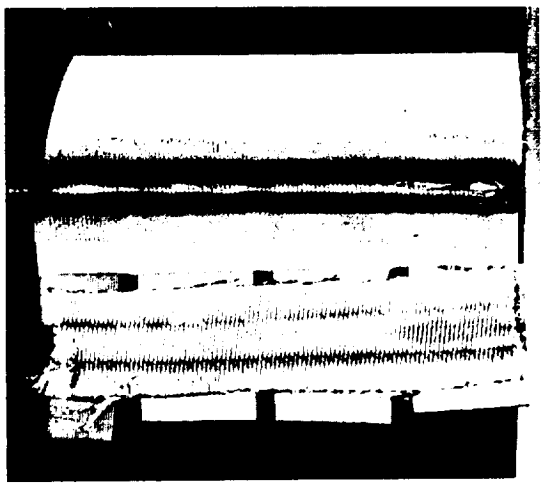

FIGURE 20.—Welded seam backed up with one type of fiber-glass tape. The texture of the tape was retained by the bead.

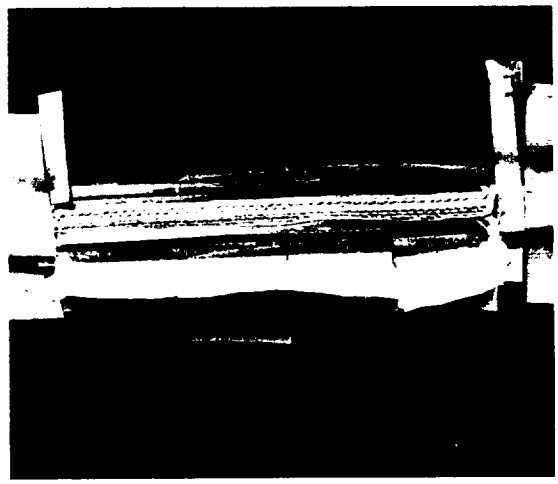

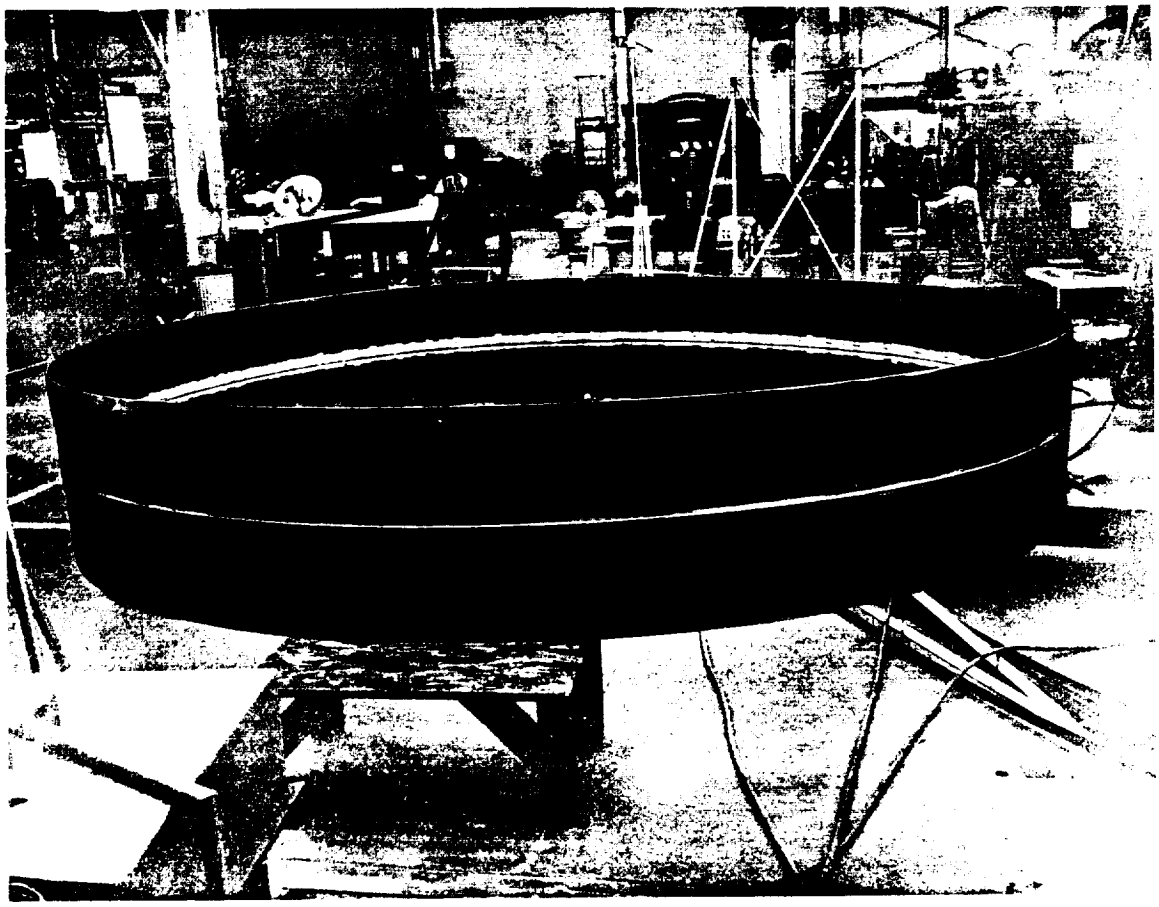

FIGURE 21.—A 160-inch-diameter aluminum-alloy test sample of a tank segment welded out of position using fiber-glass backup tape. Photograph shows the finished outer bead and the tape in position.

Clamping Tool for Fusion Welding

Handy Fitup Tool for Fusion Welding Holds Workpieces in Near-Perfect Alinement

Innovation by WILLIAM J. FRANKLIN and NEIL C. MARTIN

Because of the large size of the Saturn S–IC booster vehicle, the cost of conventional tooling for welding would be both uneconomical and cumbersome. To meet the problems, engineers at Marshall have designed and used successfully a local fitup device which alines the mating surfaces of the cylinders at the weld joint. (See figs. 22 and 23.)

The fitup tool consists of three components: a retainer, a stainless-steel band, and a screw housing, as shown in figure 24. The band connects the retainer and the screw housing through the joint to be welded. When the housing and the retainer are drawn toward each other by means of a mechanical screw, the mating surfaces are forced to aline with the surfaces of the clamp components. (See fig. 25.) A number of these devices may be applied at intervals around two cylinders to be joined. The tool is presently adjustable to material thicknesses up to and including 1½ inches without change of operational procedures.

The fitup tool is designed and constructed for simple installation, practical operation, and instant removal. The thumb lever (see fig. 26) removes slack in the band during initial installation (see figs. 27 and 28) and by simple lateral finger pressure provides a slip-free positive lock (see fig. 29). A small ball handle is easily accessible for applying additional force by hand, and a ball handle modified to accept a socket is used for applying torque. A maximum force of 1,500 pounds is obtained by applying the recommended torque.

The theory of operation is that of a simple compressive mechanical device, with the two basic parts located on opposite sides of a weld joint and drawn together by the tightening of a thin band until the workpieces are alined. A weld joint separation of approximately 0.010

FIGURE 22.—Screw housing components spaced to obtain the best results.

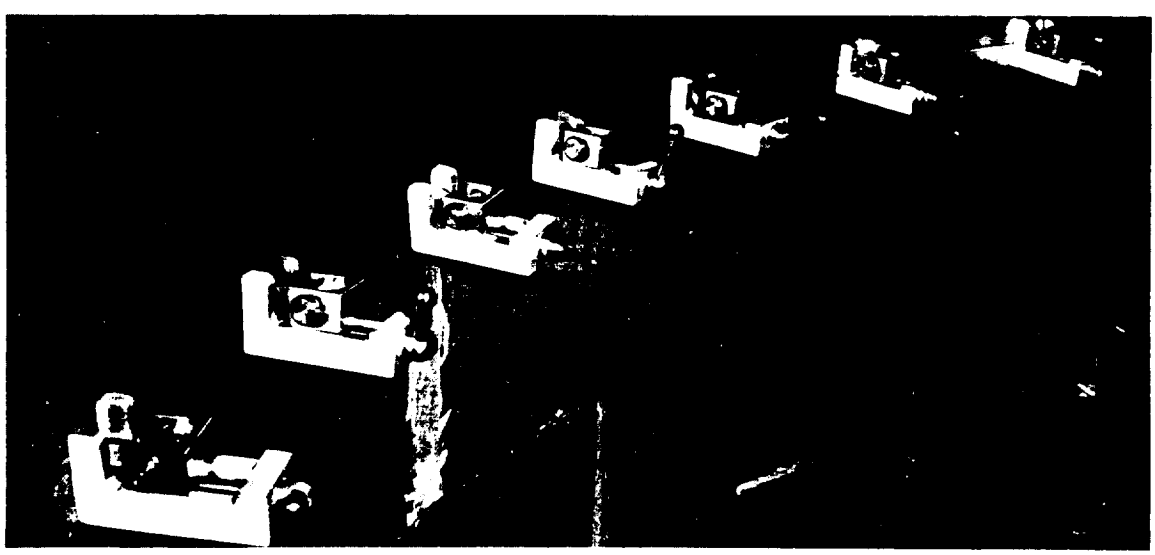

FIGURE 23.—Retainer components in place on the weld side of a tank.

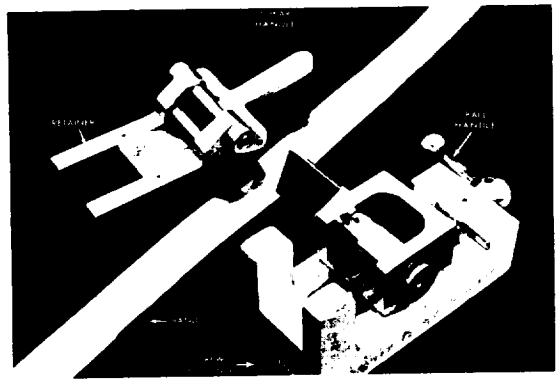

FIGURE 24.—Components of the fitup tool.

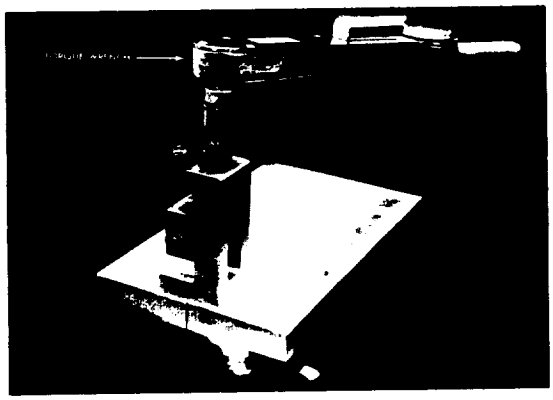

FIGURE 25.—Fitup tool applied to 1-inch-thick test panels.

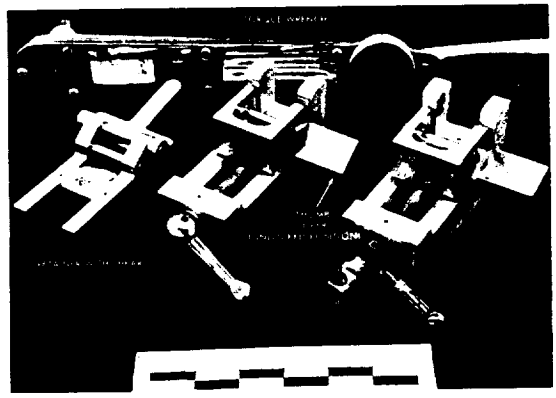

FIGURE 26.—Weld joint fitup tool showing the thumb lever and the ball handle modified for torque applications.

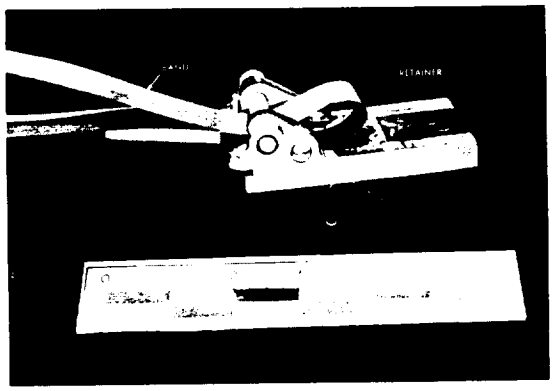

FIGURE 27.—Initial step in assembly of fitup tool.

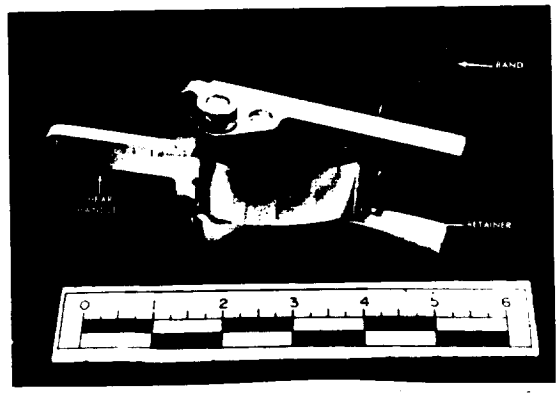

FIGURE 28.—Assembly of fitup tool.

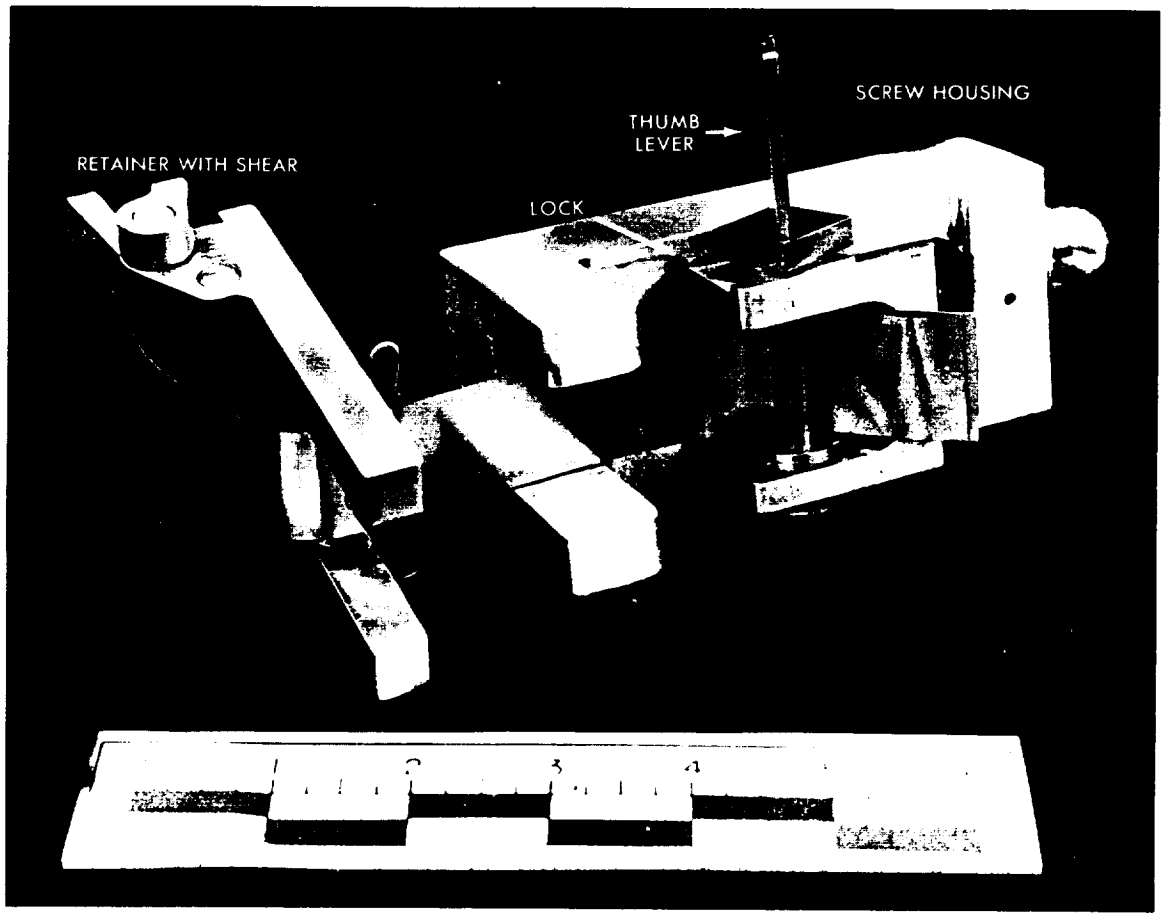

FIGURE 29.—Assembly of fitup tool, showing housing and retainer.

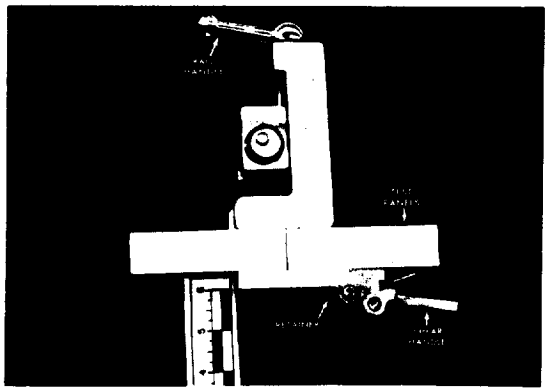

FIGURE 30.—Cross section of weld joint contained by fitup tool.

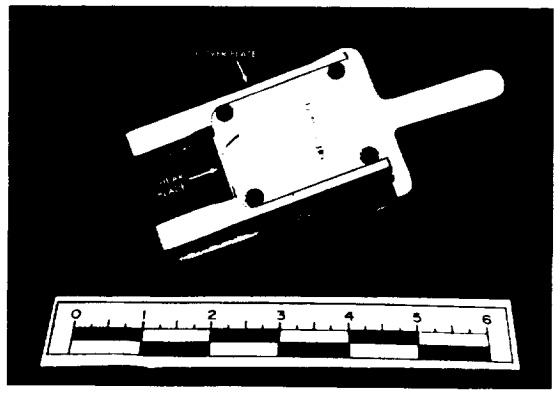

FIGURE 31.—Rear view of retainer showing shear mechanism.

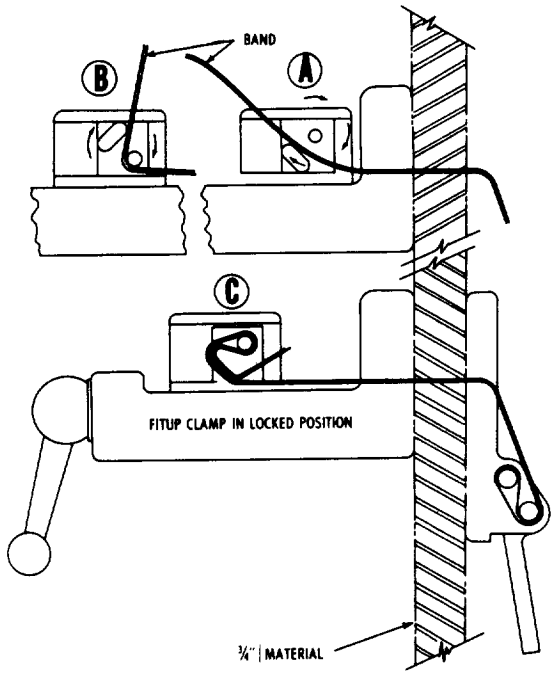

FIGURE 32.—Band installation in sequence.

inch is required. For normal operation the retainer portion of the clamp assembly is located on the weld side to afford a lower profile for welding equipment clearance. (See fig. 30.)

The clamps are removed a few inches ahead of the welding operation. The clamping device is a complete unit in that it has a built-in shear to effect removal from a weld joint. When required, a light stroke against the shear handle severs the connecting band and the clamp assembly falls away. (See figs. 31 and 32.)

The spacing of the clamps along a weld joint is optional; they can be spaced as closely as on 5-inch centers for maximum force application.

The tool weighs only 2½ pounds and is constructed of nonmagnetic materials to prevent interference with seam-tracking or other electronic equipment. In addition to providing compatibility with the welding equipment and basic tooling, the physical size of the tool likewise provides for ease of handling and storing. It is designed to assure long life and continued reuse in various weld joint fitup applications.

Tests at the Marshall Center have proved the fitup clamps capable of satisfying the current weld tooling requirements. The tooling described here provides a reliable, economical, and practical means of obtaining weld joint fitup and is compatible with the production program of the Saturn S–IC vehicle. By proper utilization of these clamps, weld joint fitup can be maintained without tacking.

Maintaining Alinement by Tack Welding

Alinement of Large-Diameter Cylinders Maintained by Direct-Current Straight-Polarity TIG Tack Welding

Innovation by JIM YEARGIN and C. A. CRAIG

The direct-current straight-polarity tungsten-inert-gas tack welding technique for out-of-position welding of large-diameter, 2219–T87 aluminum-alloy cylinders is described here. (See fig. 33.) A method of alining the welding joints has been approached from a local tooling concept. Local tooling clamps do an excellent job of alining the welding joints, but can interfere with the welding wire guide tip during some of the welding operations.

By using the local tooling clamps to aline the cylinders, then making a d.c. straight-polarity tungsten-inert-gas tack weld from the inside of the cylinders, and then removing the tooling clamps good alinement of the welding joints is maintained and there are no clamps to interfere with the welding process. (See fig. 34.)

The tack welds are approximately 8 inches apart in most cases. To maintain alinement at the longitudinal joints it is sometimes necessary to put the tacks closer together.

Tack welds have been used in welding for a number of years as a means of alining parts and so forth, but as far as can be determined, tack welds have never been used when X-ray quality welds have been required. The requirements for the tests conducted are class III or better X-ray quality (isolated porosity not exceeding $\frac{1}{64}$ inch). Cleaning after tacking is the clue to successful welding.

The tack welds are made manually without adding filler wire. The depth of fusion is approximately ¼ inch. The tack weld does not affect the penetration bead of the weld. Continuous tungsten-inert-gas butt-welds have been performed on 1-inch-thick 2219–T87 material in two passes without the use of filler wire.

FIGURE 33.—Direct-current straight-polarity tungsten-inert-gas tack welds used for maintaining alinement of large-diameter cylinders of ½-inch-thick 2219–T87 aluminum alloy.

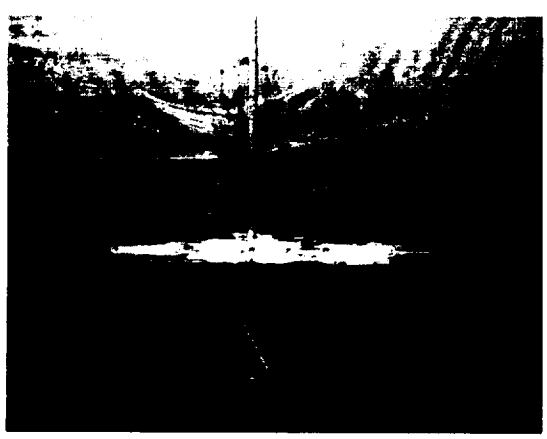

FIGURE 34.—Quality out-of-position weld performed without backup bars using the tack-weld technique.

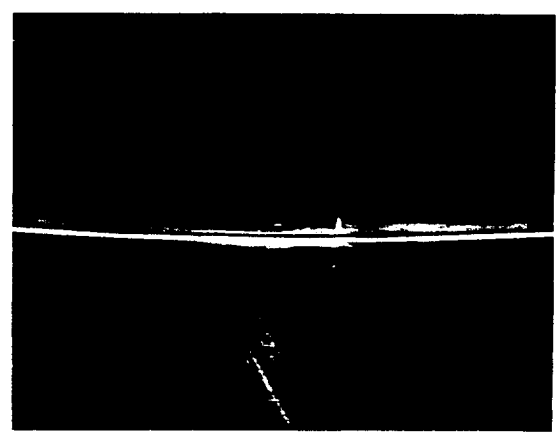

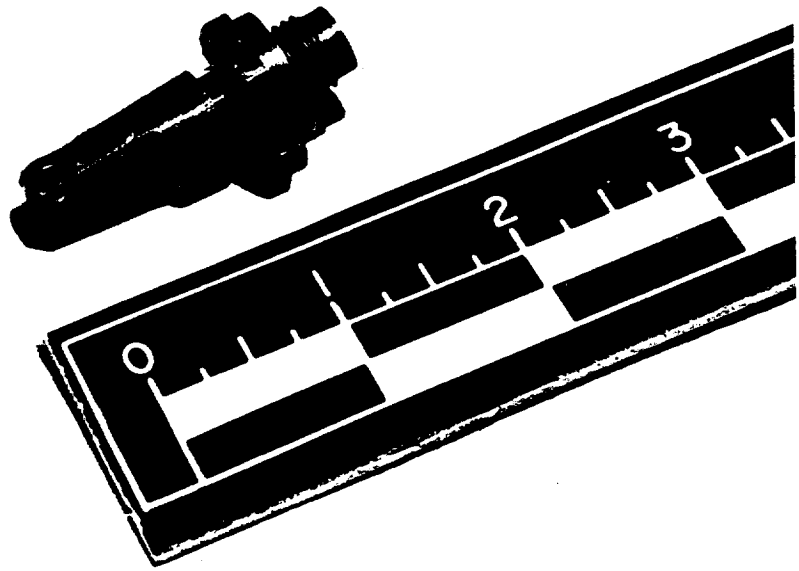

FIGURE 35.—Guide tip for feeding wire when welding with the metal-inert-gas process. Note the ball bearing in the tip.

Guide Tip for Feeding Filler Wire

Guide Tip Developed for Feeding Filler Wire When Welding With Inert Gas Processes

Innovation by CHARLES A. BROSMER

When welding aluminum in the horizontal and vertical positions the filler wire must remain in contact with the metal being welded to prevent the filler wire from melting before it reaches the molten puddle. A slight pressure must be applied to the wire to hold it against the metal in order to prevent this premature burn-off.

The tool (fig. 35) described here provides for a uniform feed rate of filler wire to the molten puddle in a metal-inert-gas or a tungsten-inert-gas weld. Prior to its development, a plain copper guide tip was used which would not withstand the pressure without *galling* (seizure due to friction) the filler wire. After the wire was *galled,* the feeding became irregular and sometimes stopped completely. This, in turn, overloaded the wire feed motor circuit, causing fuses to blow. This new guide tip (fig. 36) uses a small ball bearing to support the filler wire and thus eliminates the undesirable characteristics. The bearing to wire clearance is 0.005 inch.

The advantages of this device over the former guide wire tip are smoother weld nuggets, less crater cracking caused by sudden stops, and less down time for repairs.

FIGURE 36.—Blueprint drawings of guide tip for feeding filler wire. Material for tip body to be copper.

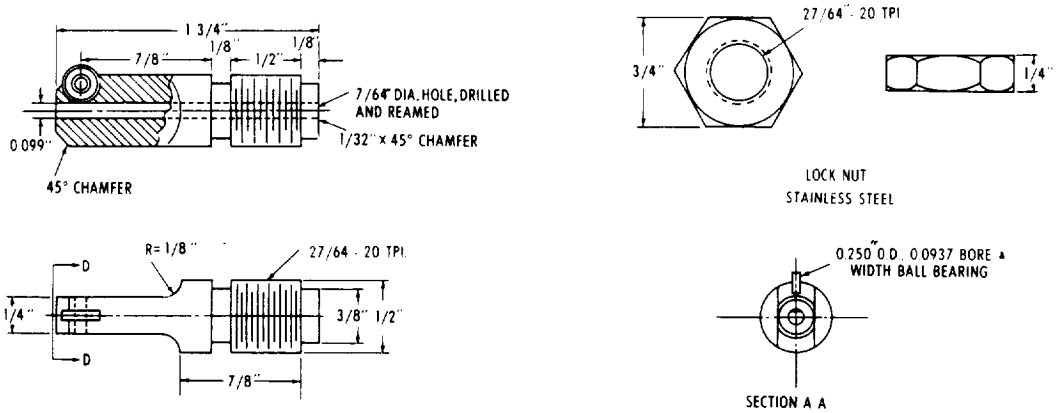

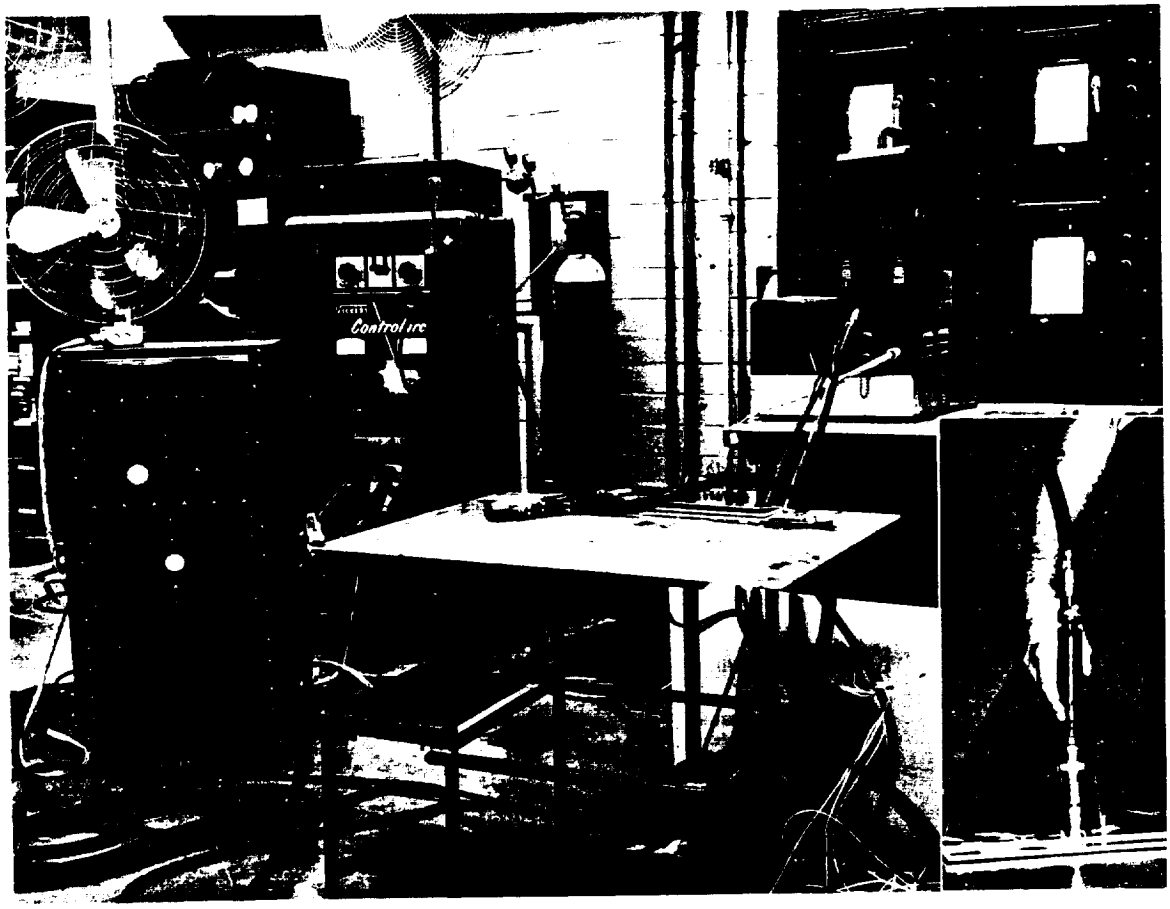

FIGURE 37.—Conventional metal-inert-gas hand torch with slightly enlarged and vented nozzle, and associated equipment.

Improved Method for Sigma Spot Welds

Improved Method of Electric Arc Spot Welding Utilizes the Sigma Technique

Innovation by WILLIAM M. MCCAMPBELL

With the sigma technique (submerged-inert-gas-metallic-arc) described here, thick, as well as thin, metal pieces may be joined with spot welds superior in quality to resistance spot welding, previous sigma spot welds made with commercial equipment, or similar welds performed by other methods.

The method provides a new approach to the concept of electric arc spot welding by the formation of a recess which insures proper penetration under conditions which prevent the formation of oxides, and by the gradual building up of a molten puddle within the recess whereby gases which may be trapped within the molten puddle are allowed to come to the surface and escape, thereby minimizing porosity and thermal cracking.

Some advantages of the variarc electric arc spot welding system over standard resistance spot welding and previous sigma welding are:

1. Lower cost.
2. Lower power requirements.
3. Portability.
4. Access to only one side of workpiece is required.
5. Surface cleanliness is less critical.
6. Thickness differences of workpieces are unimportant.
7. The welds are less porous and contain fewer thermal cracks.
8. Controls operate consistently.

The equipment used at MSFC to set up a variarc system is as follows:

1. Vickers controlarc 400 power supply with constant potential adapter and magnetic amplifier controls.

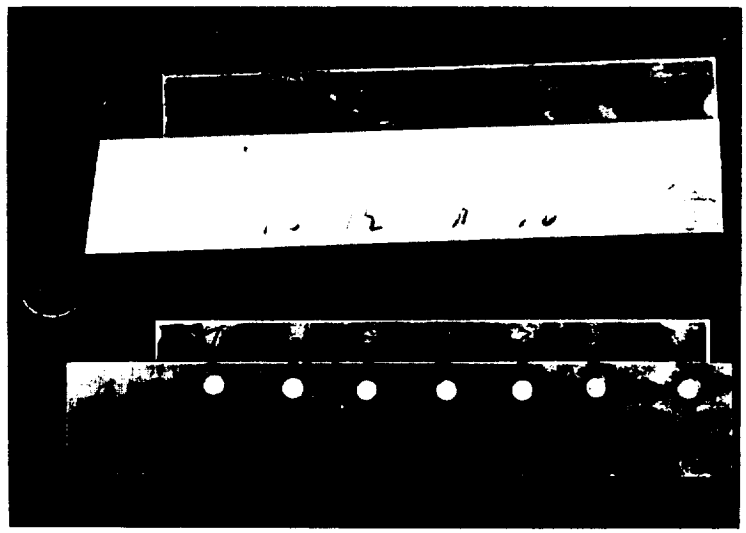

FIGURE 38.—Quality spot welds using the sigma technique.

2. Linde SWM–7 wire feed assembly.
3. Control cabinet.
4. Conventional metal-inert-gas hand torch with slightly enlarged and vented nozzle (fig. 37).

The cost of the equipment is estimated at approximately $5,000.

Quality spot welds using the sigma technique are shown in figure 38.

The method (a schematic drawing is shown in fig. 39) consists of striking an arc (19) between the consumable electrode (15) and the workpieces (23), (25) and varying the arc heat and arc length with a predetermined program to preheat the weld zone (21) of the workpieces (23), (25) to a substantially molten condition (figs. 40(a) and 40(b)). Sufficient material is then blown out of the weld zone (21) to form a deep recess (43) as shown in fig. 40(c). The sides of the deep recess (43) (fig. 40(d)), are melted and a molten puddle (46) is gradually built up within the recess (43) (figs. 40(e) and 40(f)) before interrupting the arc (19), whereby the molten puddle (46) may solidify into a nugget as shown in fig. 40(g).

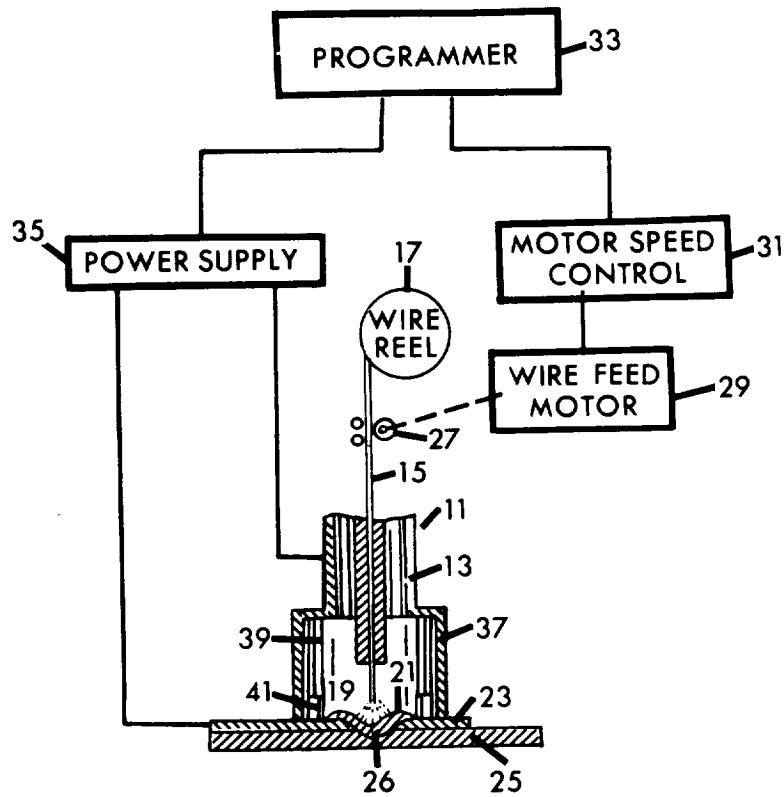

FIGURE 39.—Schematic drawing showing improved method of electric arc spot welding.

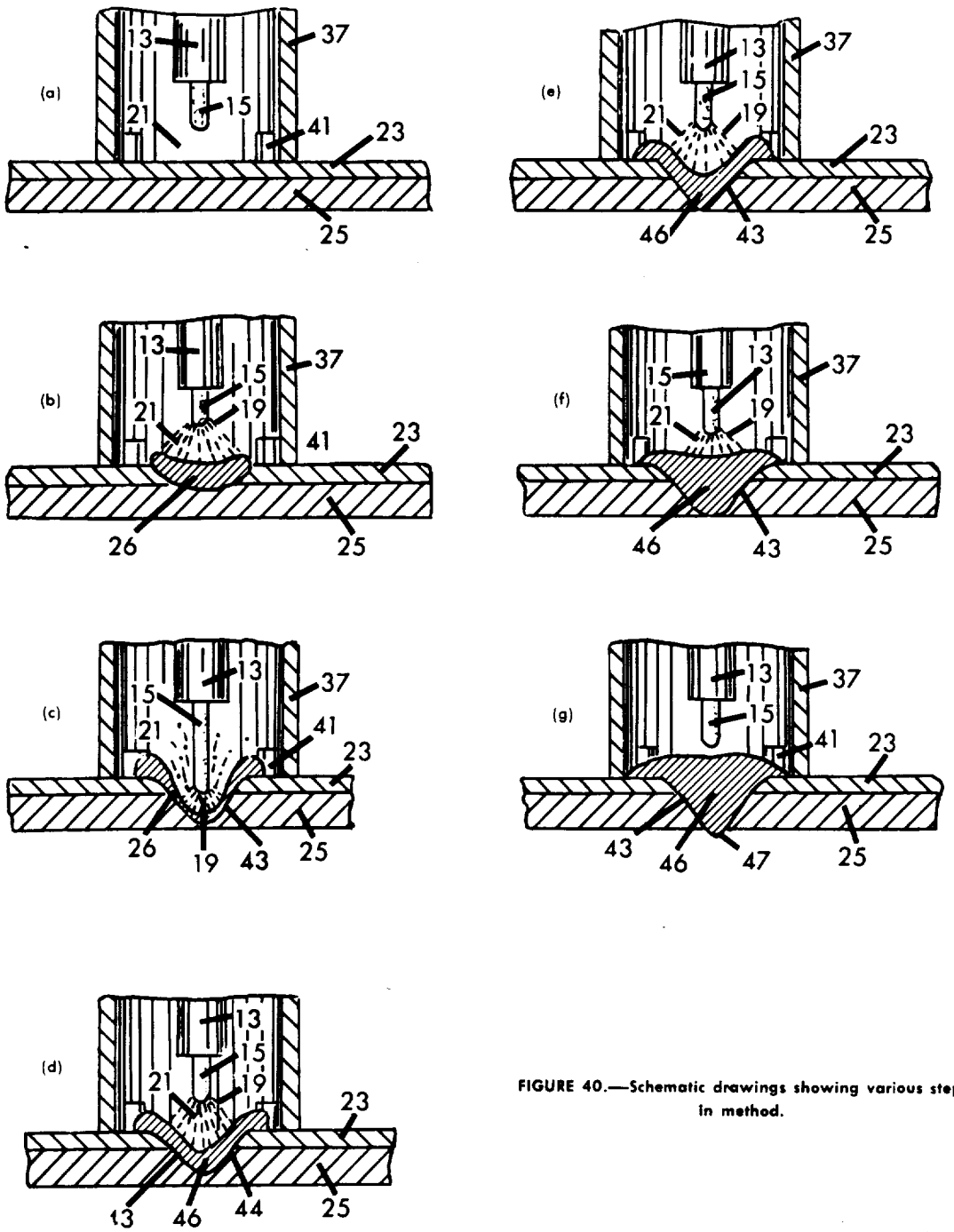

FIGURE 40.—Schematic drawings showing various steps in method.

U. S. GOVERNMENT PRINTING OFFICE : 1964 O 718-806