Technical Memorandum No. 33-168

The Orbit Determination Program of The Jet Propulsion Laboratory

M. R. Warner
M. W. Nead
R. H. Hudson

JET PROPULSION LABORATORY
CALIFORNIA INSTITUTE OF TECHNOLOGY
PASADENA, CALIFORNIA

March 18, 1964

Copyright © 1964
Jet Propulsion Laboratory
California Institute of Technology

Prepared Under Contract No. NAS 7-100
National Aeronautics & Space Administration

CONTENTS

I. Introduction 1

II. Theoretical Basis of the Program 4

A. Motion of the Spacecraft 4

B. The Normal Equation 9

C. The Data Types 11

D. Refraction and Vertical Corrections 20

E. The Partial Derivatives 23

F. Weighting of the Partials 37

G. Mapping of the Covariance Matrix 39

H. Encounter Parameters 40

III. Structure of the Links 44

Appendices

A. ODP Input 54

B. ODP Output 67

C. Operation of the ODP 112

D. ODP Subroutines 117

References 121

ABSTRACT

24123

A computer program for determining the optimum least-squares estimates of spacecraft orbital parameters and certain physical and observational constants has been written at the Jet Propulsion Laboratory. A discussion of the theoretical basis of the program and flow diagrams of the computing procedure are presented. A description of the operation of the program, including input formats, is included.

Author

I. INTRODUCTION

The Orbit Determination Program (ODP) for the IBM 7094 computer was written to meet the specifications of the Jet Propulsion Laboratory for a reliable and accurate method of tracking and predicting the motion of lunar and interplanetary spacecraft. The uses of the ODP may conveniently be separated into real-time and nonreal-time applications.

Real-time applications

1. To establish a reliable set of orbital elements for the spacecraft.
2. To provide an acquisition ephemeris for the world-wide network of tracking stations.
3. To assist JPL engineers in evaluating the performance of tracking stations and the quality of tracking data.

Nonreal-time applications

1. To provide a high-speed computing method necessary for orbit determination and tracking data accuracy studies (pre-mission).
2. To provide a high-speed computing method necessary for a sophisticated orbital analysis based on large numbers of observations (post-mission).

In addition to establishing the six initial conditions of the spacecraft, the ODP has the capability of solving for 12 physical constants and the latitude, longitude, and Earth radius at 15 tracking stations. From this set of 63 parameters, a subset containing from one to twenty is extracted by the user. The ODP obtains solutions for the parameters in this subset.

The ODP, since it must have initial estimates of the spacecraft orbit and the other parameters, is an orbit improvement program. It differentially corrects the estimates by means of an overdetermined system of equations, employing a modified least-squares method. The method of establishing the system of equations may be briefly outlined as follows:

1. Input estimate of orbit.
2. Write probe ephemeris tape based on orbit estimate.

3. Read ith observation from data tape, G_i. This observation may be slant range, range rate, one of four angle types, one of five doppler types, occultation time, or impact time.

4. Using probe ephemeris, determine the value of the observation based on orbit estimate, F_i.

5. Obtain the residual, $\Delta F_i = G_i - F_i$

6. Calculate the partials of the observations with respect to the n parameters to be estimated, $\partial F_i/\partial Q_1, \cdots, \partial F_i/\partial Q_n$

7. Multiply the vector of partials by itself to form a matrix J_i^*

8. Add J_i^* to the accumulated matrix $J^* = J_1^* + J_2^* + \cdots + J_{i-1}^*$

9. Multiply the vector of partials by the residual to form a vector R_i

10. Add R_i to the accumulated vector $R = R_1 + R_2 + \cdots + R_{i-1}$

11. Repeat steps 3 through 10 until all observations are processed.

12. Solve the normal equations $J^* \Delta Q = R$ for the vector of changes to the estimate, ΔQ

13. Repeat steps 2 through 12 until process converges.

The ODP is written on magnetic tape in ten records or links. Each link constitutes a logical section of the overall orbit determination. The program is started by reading the initial link into the 7094 core. This link performs its part of the processing and calls in the next link, and so on.

Input to the ODP are punched cards, a data tape, and a planetary ephemeris tape. The cards are punched by the user, and specify the initial estimates of the parameters and the desired ODP options. The data tape is prepared by the Tracking Data Editing Program (TDEP). Written on this tape are the observations, identified by time and tracking station, and weighting information. The operation of the TDEP is discussed in Ref. 1. The planetary ephemeris tape contains the positions of the Moon, Earth-Moon barycenter, Venus, Mars, Jupiter, and Saturn. The velocities of the Earth-Moon barycenter, Venus, and Mars are also written on the tape. This tape is presently used by all flight path programs at JPL. The probe ephemeris tape is written by a modification of the JPL Space Trajectories Program (Ref. 2). This program is one link of the ODP.

The ODP may be operated in the utility mode or the operational mode. Under the utility mode, all options of the ODP are available to the user. The operational mode is used during the first hours of a mission when a strict sequence of events must be observed. Most options and parameters are pre-set and human intervention is restricted. The parameter subset consists only of the six initial conditions.

Programming of the ODP began in January 1962. The first operating version was completed in August 1962 for the *Mariner-R* mission. The program also found real-time application in the *Ranger*-5 mission of October 1962. Since January 1963, the program has been used extensively in post-processing *Mariner* and *Ranger* data and in the planning of future missions.

II. THEORETICAL BASIS OF THE PROGRAM

A. Motion of the Spacecraft

The vector equation of motion as used in the ODP may be written as follows:

$$\ddot{\mathbf{r}} = -\mu_k \frac{\mathbf{r}}{r^3} - \sum_{\substack{j=1 \\ j \neq k}}^{n} \mu_j \left(\frac{\mathbf{r}_{jp}}{r_{jp}^3} + \frac{\mathbf{r}_j}{r_j^3} \right) + \ddot{\mathbf{r}}_{(OBL)} + \ddot{\mathbf{r}}_{(PF)} + \ddot{\mathbf{r}}_{(RP)}$$

where

$-\mu_k \frac{\mathbf{r}}{r^3}$ = acceleration on the probe due to the central body (i.e., the two-body equation)

$-\mu_j \frac{\mathbf{r}_{jp}}{r_{jp}^3}$ = acceleration on the probe due to the jth of the $n-1$ perturbing bodies

$-\mu_j \frac{\mathbf{r}_j}{r_j^3}$ = acceleration on the central body due to the jth body

$\ddot{\mathbf{r}}_{(OBL)}$ = acceleration on the probe due to the oblateness of the Earth and/or Moon

$\ddot{\mathbf{r}}_{(PF)}$ = acceleration on the probe during the powered portion of its flight. Used only when computing pointing predictions

$\ddot{\mathbf{r}}_{(RP)}$ = acceleration on the probe due to the pressure of solar radiation

In the ODP, the solutions to the above equations of motion are written on the probe ephemeris tape for a series of time points during the trajectory. The solutions are obtained by a stepwise numerical integration of the equations in the Cowell form, as above. The integration is accomplished using an

Adams-Moulton sixth-difference method started by a Runge-Kutta process. The time interval is governed by the distance of the probe from the central body. This entire procedure is outlined in detail in Ref. 2. The phasing as explained in this Reference is done in the ODP adaptation, but the probe ephemeris is always written in geocentric equatorial coordinates.

Written on the probe ephemeris tape at each step interval are the position, velocity, and acceleration of the probe, the nutations in longitude and obliquity, and the 36 partial derivatives of the form

$$\frac{\partial x}{\partial x_0}, \frac{\partial y}{\partial x_0}, \ldots, \frac{\partial \dot{z}}{\partial \dot{z}_0}$$

referred to as the solutions to the variational equations, or as the U matrix. The formulas for the partials and nutations are found in Ref. 2.

The subroutine LOOKUP is used by the ODP to interpolate the probe ephemerides. Following the initial entry, all positioning of the tape is automatic. The parameters are obtained as a function of time by a fifth-degree Lagrangian interpolation of the form

$$x(t) = \sum_{k=0}^{5} l_k(t)\, x(t_k)$$

where

$$l_i(t) = \frac{(t-t_0)\cdots(t-t_{i-1})(t-t_{i+1})\cdots(t-t_5)}{(t_i-t_0)\cdots(t_i-t_{i-1})(t_i-t_{i+1})\cdots(t_i-t_5)}$$

LOOKUP also computes the third derivatives of position for doppler calculations. The accelerations are numerically differentiated by means of the derivative of the Lagrangian formula.

In obtaining those terms of the equations of motion which are a function of planetary positions, the trajectory link, and the other links make use of the JPL planetary ephemeris tape. The tape contains ephemerides of the Moon at a 1-day interval, and the ephemerides of the Earth-Moon barycenter, Venus, Mars,

Jupiter, and Saturn at 4-day intervals. All ephemerides are based on the mean equator and equinox of 1950.0. An Everett interpolation is used to obtain ephemerides at any time. In the ODP the following rotation is employed to obtain the ephemerides in the true equator and equinox of date system:

$$\bar{\epsilon} = 23.^\circ445759 - 0.^\circ01309404T - 0.^\circ88 \times 10^{-6}\, T^2 + 0.^\circ5 \times 10^{-6}\, T^3$$

$$\alpha_G = 100.^\circ0755426 + 0.^\circ985647346d + 2.^\circ9015 \times 10^{-13}\, d^2 + \alpha s + \Delta\lambda \cos \bar{\epsilon} \pmod{360^\circ}$$

$$\begin{pmatrix} x \\ y \\ z \end{pmatrix}_{\text{of date}} = NA \begin{pmatrix} x \\ y \\ z \end{pmatrix}_{1950.0}$$

$$A = \begin{bmatrix} 1 & -\Delta\lambda \cos \bar{\epsilon} & -\Delta\lambda \sin \bar{\epsilon} \\ \Delta\lambda \cos \bar{\epsilon} & 1 & -\Delta\epsilon \\ \Delta\lambda \sin \bar{\epsilon} & \Delta\epsilon & 1 \end{bmatrix}$$

$$a_{11} = 1 - 0.29697 \times 10^{-3}\, T^2 - 0.13 \times 10^{-6}\, T^3$$

$$a_{12} = -0.02234988T - 0.676 \times 10^{-5}\, T^2 + 0.221 \times 10^{-5}\, T^3$$

$$a_{13} = -0.00971711T + 0.207 \times 10^{-5}\, T^2 + 0.96 \times 10^{-6}\, T^3$$

$$a_{21} = -a_{12}$$

$$a_{22} = 1 - 0.24976 \times 10^{-3}\, T^2 - 0.15 \times 10^{-6}\, T^3$$

$$a_{23} = -0.10859 \times 10^{-3}\, T^2 - 0.3 \times 10^{-7}\, T^3$$

$$a_{31} = -a_{13}$$

$$a_{32} = a_{23}$$

$$a_{33} = 1 - 0.4721 \times 10^{-4}\, T^2 + 0.2 \times 10^{-7}\, T^3$$

where

T = Julian centuries past 1950.0

d = integer days past 1950.0

s = seconds past 0^h of dth day

ω = earth rotation rate

$\bar{\epsilon}$ = mean obliquity

α_G = Greenwich hour angle

$\Delta\epsilon$ = nutation in obliquity

$\Delta\lambda$ = nutation in longitude

The oblate potential function for the Earth may be written as follows:

$$\Phi = \frac{\mu_e}{r}\left\{1 + \frac{JR_e^2}{3r^2}(1 - 3\sin^2\phi) + \frac{HR_e^3}{5r^3}(3 - 5\sin^2\phi)\sin\phi + \frac{DR_e^4}{35r^4}(3 - 30\sin^2\phi + 35\sin^4\phi)\right\}$$

where J, H, and D are the second, third, and fourth harmonic coefficients, R_e is the Earth's equatorial radius, ϕ is the geocentric latitude, and r is the geocentric distance of the probe. The perturbative accelerations on the probe due to the oblateness terms are included in the equations of motion.

The use of the Space Trajectories Program by the ODP is such that upon each entry, the current values of all parameters are used. Thus if the ODP adjusts the radius of the Earth, the updated value is used by the trajectory link during the next iteration.

The trajectory link, and all other links of the ODP, require the initial conditions of the spacecraft orbit to be in the geocentric cartesian system, true equator and equinox of date. However, provision has been made to accept the initial conditions in the Earth-fixed spherical system:

r_0 = geocentric distance, km

ϕ_0 = geocentric latitude, deg

λ_0 = geocentric longitude, deg

v_0 = geocentric velocity, km/sec

γ_0 = elevation angle of velocity relative to earth, deg

σ_0 = azimuth angle of velocity relative to earth, deg

all at t_0, epoch. These are then translated to the cartesian system for internal use:

$$
\begin{aligned}
x_0 &= r_0 \cos \phi_0 \cos (\alpha_G + \lambda_0) \\
y_0 &= r_0 \cos \phi_0 \sin (\alpha_G + \lambda_0) \\
z_0 &= W \\
\dot{x}_0 &= (\dot{U} - \omega V) \cos \alpha_G - (\dot{V} + \omega U) \sin \alpha_G \\
\dot{y}_0 &= (\dot{U} - \omega V) \sin \alpha_G + (\dot{V} + \omega U) \cos \alpha_G \\
\dot{z}_0 &= \dot{W}
\end{aligned}
$$

where

$$
\begin{aligned}
U &= r_0 \cos \phi_0 \cos \lambda_0 \\
V &= r_0 \cos \phi_0 \sin \lambda_0 \\
W &= r_0 \sin \phi_0 \\
\dot{U} &= v_0 (\sin \gamma_0 \cos \phi_0 \cos \lambda_0 - \cos \gamma_0 \sin \lambda_0 \sin \sigma_0 - \cos \gamma_0 \sin \phi_0 \cos \lambda_0 \cos \sigma_0) \\
\dot{V} &= v_0 (\sin \gamma_0 \cos \phi_0 \sin \lambda_0 + \cos \gamma_0 \cos \lambda_0 \sin \sigma_0 - \cos \gamma_0 \sin \phi_0 \sin \lambda_0 \cos \sigma_0) \\
\dot{W} &= v_0 (\sin \gamma_0 \sin \phi_0 + \cos \gamma_0 \cos \phi_0 \cos \sigma_0)
\end{aligned}
$$

Thus, the first transformation is to the U, V, W system of Earth-fixed geocentric cartesian elements. These are then converted to space-fixed geocentric by means of the Greenwich hour angle, α_G.

B. The Normal Equations

The complete form of the normal equations as briefly presented in the introduction is

$$\left(\sum_{i=1}^{N} \phi_i \, w_i^{-1} \, \phi_i^T + \tilde{\Gamma}^{-1} \right) \Delta Q = \sum_{i=1}^{N} \phi_i \, w_i^{-1} \, \Delta F_i + \tilde{\Gamma}^{-1} \, \Delta Q_0$$

where ϕ_i = vector of partials $\partial F_i / \partial Q$ associated with the ith observation

w_i = a weight, which is a function of the data type F_i

$\tilde{\Gamma}$ = an a priori covariance matrix (preliminary knowledge concerning the n parameters to be estimated)

ΔF_i = the residual, $G_i - F_i$

ΔQ_0 = $Q_0 - Q_{r-1}$ where Q_0 are the a priori estimates of the parameters and Q_{r-1} are the estimates obtained from the $(r-1)$th iteration

Thus, in the notation of the introduction we may write

$$(J^* + \tilde{\Gamma}^{-1}) \, \Delta Q = R + \tilde{\Gamma}^{-1} \, \Delta Q_0$$

and if $\tilde{\Gamma}^{-1} = 0$ (i.e., not input to the program)

$$J^* \, \Delta Q = R$$

It is evident that the solution of this series of equations requires a matrix inversion as part of the stepwise regression. In the ODP, the solution is obtained by the subroutine STPREG. It normalizes $J^* + \tilde{\Gamma}^{-1}$ before inverting. Although the inversion is primarily necessary to obtain new ΔQ values, much

statistical information can be obtained from the inverse itself. For example, the set of values $\sqrt{J_{ii}}$ (where j is an element of J^{-1}) represents the standard deviations on the set ΔQ_i. The entire J^{-1} may be used to determine correlation coefficients between the n parameters. Or the matrix may be used as an a priori estimate for a subsequent orbit determination.

The covariance matrix of estimated parameters is defined as

$$\Gamma = J^{-1} + J^{-1} K J^{-1}$$

where

$$J^{-1} = (J^* + \tilde{\Gamma}^{-1})^{-1}$$

and

$$K = \nu \Gamma_{\tilde{\gamma}} \nu^T$$

where

$\Gamma_{\tilde{\gamma}}$ = a priori covariance matrix of the m *considered* parameters

$\nu = \sum_{i=1}^{N} \phi_i w^{-1} \theta_i^T$ (θ_i is the analogous vector of partials of considered parameters)

From the above, it is evident that the ODP user can consider the effects of uncertainties in parameters without changing the solution vector ΔQ. Thus, for example, he may ask the ODP to estimate the six initial conditions and to consider the uncertainty in the astronomical unit. The solution obtained for the orbit will be exactly that obtained without the consider option, but the statistical information on the elements will be corrupted by the uncertainty in the astronomical unit.

In choosing the weights to be applied to the partial derivatives, the user must recall that the partials of all data types are accumulated in the J matrix; therefore the function of the weighting is twofold:

1. To describe the user's confidence in the data.

2. To eliminate the effect of different laboratory units.

The use of the a priori $\tilde{\Gamma}$ (or $\tilde{\Gamma}^{-1}$) is optional in the ODP. The absence of this matrix is interpreted to mean that the user has no advance knowledge of the parameters to be estimated, i.e., he has input an infinite diagonal. In this case, the ODP will calculate ΔQ based on the J matrix alone.

C. The Data Types

The ODP has the capability to process 13 types of tracking data. These are:

ρ	slant range, km
$\dot{\rho}$	slant range rate, km/sec
γ	elevation angle, deg
σ	azimuth angle, deg
δ	declination, deg (tracking station or optical telescope)
α	hour angle, deg (tracking station)
α_r	right ascension, deg (optical telescope)
f_1	one-way integrated doppler frequency, cps
f_{c3}	coherent three-way integrated doppler frequency, cps
f_3	three-way integrated doppler frequency, cps
f_{d1}	differenced one-way integrated doppler frequency, cps
T_0	time of occultation by target (immersion or emersion)
T_I	time of impact of target

Of these data types, all but occultation or impact times are processed by the TDEP; the latter are input directly by card to the ODP.

The ODP, in order to obtain the residual, must calculate the observation F that corresponds to the observed value G. The calculation of F involves more than the geometric considerations; allowances must be made for the propagation time of light, the errors due to refraction, and differences between geodetic and geocentric station locations. The station errors will be discussed in the following section. The light time correction is made as follows:

$$t = t_{ob} - \frac{(r - R_e)}{c}$$

where

t = time at probe

t_{ob} = time of observation

r = $\sqrt{x^2 + y^2 + z^2}$, obtained from probe ephemeris at t

R_e = earth radius

c = velocity of light

This formula is applied twice in an iterative process. The iteration is necessary, since a change in t forces a change in r. The change in t on the second iteration is so small that a third iteration is unnecessary. A further (secondary) correction is used when computing doppler types (see below).

A description of the data types with the equations used in their calculation follows. The following symbols and terminology are employed frequently:

$\mathbf{r}, \dot{\mathbf{r}}$ = $(x, y, z, \dot{x}, \dot{y}, \dot{z})$ = geocentric position and velocity of the probe

$\boldsymbol{\rho}, \dot{\boldsymbol{\rho}}$ = $(\xi, \eta, \zeta, \dot{\xi}, \dot{\eta}, \dot{\zeta})$ = topocentric position and velocity of the probe

$\mathbf{R}_i, \dot{\mathbf{R}}_i$ = $(X_i, Y_i, Z_i, \dot{X}_i, \dot{Y}_i, \dot{Z}_i)$ = geocentric position and velocity of station i

$\mathbf{r}_s, \dot{\mathbf{r}}_s$ = $(x_s, y_s, z_s, \dot{x}_s, \dot{y}_s, \dot{z}_s)$ = geocentric position and velocity of the sun

Slant range is the distance from probe to tracking station, or $|\rho|$:

$$\rho_i = |r(t) - R_i(t_{ob})|$$

Slant range rate is the radial velocity of the probe with respect to the tracking station, or $|\dot{\rho}|$:

$$\dot{\rho}_i = \frac{\xi_i \dot{\xi}_i + \eta_i \dot{\eta}_i + \zeta_i \dot{\zeta}_i}{\rho_i}$$

where

$$\xi_i = x(t) - X_i(t_{ob}) \qquad x \to y, z$$

Elevation and hour angles are shown in the following topocentric octant:

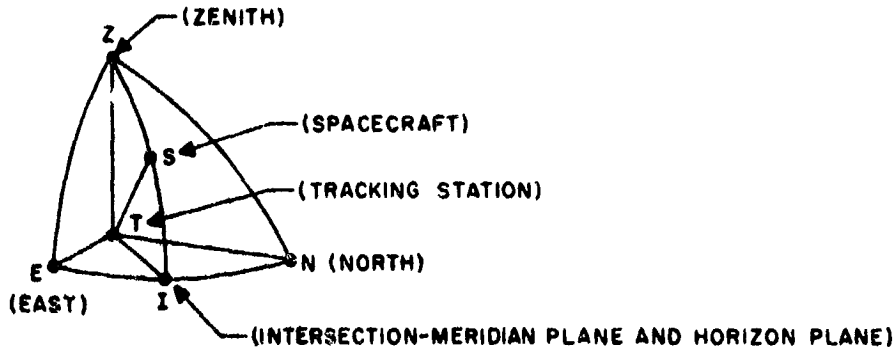

Elevation angle is angle STI in the figure, while azimuth angle (in the ODP measured east of north) is angle NTI.

$$\gamma_i = \sin^{-1}\left[\frac{1}{R_i}(X_i L_x + Y_i L_y + Z_i L_z)\right], \quad -90^\circ \leq \gamma_i \leq 90^\circ$$

where

$$L_x = \frac{\xi + x_s}{\rho}, \quad x = y, z$$

$$\sigma_i = \tan^{-1}\left(\frac{\sin \sigma_i}{\cos \sigma_i}\right) \qquad 0^\circ \leq \sigma_i < 360^\circ$$

$$\sin \sigma_i = \frac{L_y \cos(\alpha_G + \lambda_i) - L_x \sin(\alpha_G + \lambda_i)}{\cos \gamma_i}$$

$$\cos \sigma_i = \frac{-L_x \sin \phi_i \cos(\alpha_G + \lambda_i) - L_y \sin(\alpha_G + \lambda_i) \sin \phi_i + L_z \cos \phi_i}{\cos \gamma_i}$$

where

ϕ_i = geocentric latitude of station i

λ_i = longitude east of Greenwich of station i

α_G = Greenwich hour angle of vernal equinox

Hour angle, right ascension, and declination are shown in the following geocentric octant:

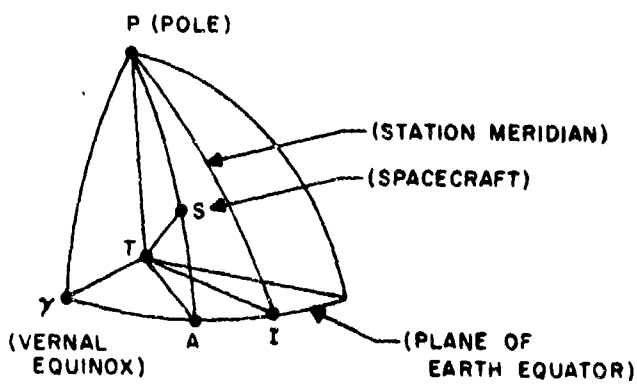

Right ascension is angle γTA, hour angle is angle ITA, and declination is angle STA.

$$\alpha_i = \alpha_G + \lambda_i - \tan^{-1}\left(\frac{n}{\xi}\right) \qquad 0° \leq \lambda_i < 360°$$

$$\delta_i = \sin^{-1} L_z \qquad 270° \leq \delta_i < 360°$$

$$0° \leq \delta_i \leq 90°$$

If optical right ascension is input to the ODP, it is converted to hour angle by

$$\alpha_i = \alpha_G + \lambda_i - \alpha_{ri}$$

The orbit determination then proceeds as if hour angles were input, except that it makes a special refraction correction to the optical right ascension and declination.

The following doppler types are processed by the ODP: *one-way doppler* is the difference in frequency between a signal transmitted at the probe and received at the station. The difference (doppler shift) is proportional to the radial velocity of the probe with respect to the station. This difference may also be computed from a signal originating at a tracking station. *Three-way doppler* is observed at station i when another station (q) transmits a signal toward the probe. The probe retransmits the signal instantaneously. It is then received by station i where frequency shift is determined by subtracting the transmitting frequency. The *coherent three-way doppler* shift is obtained directly by beating the transmitted frequency against the received signal. This data type may be obtained at the transmitting station.

Let $F(t_{ob})$ represent the instantaneous frequency of the doppler shift observed at time t_{ob} by any of the above methods. Unfortunately $F(t_{ob})$ is never directly observed. Rather, a counter is turned on and after some interval of time τ the value of the counter $f(t_{ob})$ is read. τ is often set to one second in order that $f(t_{ob})$ be counted per second or *average* frequency. As instrumented in the DSIF network the counter advances as the sinusoidal doppler signal changes from minus to plus. Thus the integer count may be in error by as much as one cycle during the interval τ. In practice τ is set large enough so that this roundoff error is insignificant with respect to the overall accuracy of the computer program.

$f(t_{ob})$ is referred to as integrated doppler frequency:

$$f(t_{ob}) = \int_{t_{ob}-\tau}^{t_{ob}} F(t)\, dt$$

Or, as it is computed by the ODP at the midpoint of the counting interval, $T = t_{ob} - \frac{1}{2}\tau$:

$$f(t_{ob}) = \int_{T-\frac{1}{2}\tau}^{T+\frac{1}{2}\tau} F(t)\, dt$$

It is possible to obtain $f(t_{ob})$ by direct numerical integration of this formula, but the process is quite time consuming and very difficult in view of the light time correction discussed below. Therefore a Taylor series is expanded about T and integrated term by term leading to

$$f(t_{ob}) = \tau F(T) + \frac{\tau^3}{24} \ddot{F}(T) + 0(F^{iv})$$

Thus the truncation error in this formula is a function of τ and the fourth derivative of the frequency. On a typical trajectory the higher derivatives of frequency are large enough near Earth so that τ must be shortened to avoid truncation error in the above formula. This unfortunately is in conflict for the previous argument for long count times, so a compromise must be made. The ODP will accept any integer count time in the range $1 \leq \tau \leq 1023$ seconds.

The following formulas are used by the ODP in computing doppler types:

$$f_1 = \omega_1 - \omega_2 \left[f_T + D(t - t_0)\right] \phi_1$$

$$f_{c3} = \omega_3 + \omega_4 f_q \left[1 - \phi_3\right]$$

$$f_3 = \omega_5 - \omega_6 f_q \phi_3$$

where

$$\omega_1 = 930.15 \times 10^6 \text{ cps}$$

$$\omega_2 = \frac{31}{32}$$

$$\omega_3 = 10^5 \text{ cps}$$

$$\omega_4 = 32.359550561$$

$$\omega_5 = 930.15 \times 10^6 \text{ cps}$$

$$\omega_6 = 31.348314605$$

f_T = probe transponder frequency, cps

f_q = station q transmitting frequency, cps

D = linear rate of change of f_T (drift), cps/sec

$$\Phi_1 = 1 - \frac{\dot{\rho}_i}{c} + \frac{1}{c^2} h_1 + \frac{\dddot{\rho}_i}{c} \frac{\tau^2}{24}$$

$$\Phi_3 = 1 - \frac{1}{c} (\dot{\rho}_i + \dot{\rho}_q) \frac{1}{c^2} h_3 - \frac{1}{c} (\dddot{\rho}_i + \dddot{\rho}_q) \frac{\tau^2}{24}$$

$$h_1 = \frac{\dot{\rho}}{\rho} [\xi (\dot{x} - \dot{x}_s) + \eta (\dot{y} - \dot{y}_s) + \zeta (\dot{z} - \dot{z}_s)]_t + \frac{1}{2} [\dot{R}^2_{it_{ob}} - \dot{r}_t^2]$$

$$h_3 = \dot{\rho}_i^2 + \dot{\rho}_q \dot{\rho}_i + \frac{\dot{\rho}_i}{\rho_i} [\xi_i (\dot{X}_{it_{ob}} - \dot{x}_{st}) + \eta_i (\dot{Y}_{it_{ob}} - \dot{y}_{st}) + \zeta_i (\dot{Z}_{it_{ob}} - \dot{z}_{st})]$$

$$- \frac{\dot{\rho}_q}{\rho_q} [\xi_q (\dot{X}_{qt_{tr}} - \dot{x}_{st}) + \eta_q (\dot{Y}_{qt_{tr}} - \dot{y}_{st}) + \zeta_q (\dot{Z}_{qt_{tr}} - \dot{z}_{st})] + [\dot{x}_{st} (\dot{X}_{qt_{tr}} - \dot{X}_{it_{ob}})$$

$$+ \dot{y}_{st} (\dot{Y}_{qt_{tr}} - \dot{Y}_{it_{ob}}) + \dot{z}_{st} (\dot{Z}_{qt_{tr}} - \dot{Z}_{it_{ob}})] + \frac{1}{2} [\dot{R}^2_{it_{ob}} - \dot{R}^2_{qt_{tr}}]$$

t_{tr} = time of signal transmission by station q

t = time of signal retransmission by probe

t_{ob} = time of signal reception by station i

t_0 = epoch of current orbit determination

In obtaining precise coordinates of the probe at time t, a secondary light time approximation is made which is of sufficient accuracy to make multiple interpolations on the probe ephemeris unnecessary. As in the calculation of the primary correction Δt, which defined the approximate probe time t_1, this procedure requires two iterations:

$$\mathbf{r}_t = \mathbf{r}_{t_1} + \epsilon_t \dot{\mathbf{r}}_{t_1}$$

$$\dot{\mathbf{r}}_t = \dot{\mathbf{r}}_{t_1} + \epsilon_t \ddot{\mathbf{r}}_{t_1}$$

$$\ddot{\mathbf{r}}_t = \ddot{\mathbf{r}}_{t_1} + \epsilon_t \ddot{\mathbf{r}}_{t_1}$$

$$\dddot{\mathbf{r}}_t = \dddot{\mathbf{r}}_{t_1}$$

$$\Delta t_2 = \frac{\rho + \Delta t\, \dot{\rho}}{c + \dot{\rho}}$$

$$\epsilon_t = \Delta t - \Delta t_2$$

The procedure is then repeated with the calculated ϵ_t.

The scalar $\dddot{\rho}$ used in the counted doppler equations is obtained from the geocentric probe and station vectors:

$$\boldsymbol{\rho} = \mathbf{r} - \mathbf{R}$$

$$\dot{\boldsymbol{\rho}} = \dot{\mathbf{r}} - \dot{\mathbf{R}}$$

$$\ddot{\boldsymbol{\rho}} = \ddot{\mathbf{r}} - \ddot{\mathbf{R}}$$

$$\dddot{\boldsymbol{\rho}} = \dddot{\mathbf{r}} - \dddot{\mathbf{R}}$$

$$\rho = (\boldsymbol{\rho} \cdot \boldsymbol{\rho})^{1/2}$$

$$\rho\dot{\rho} = \boldsymbol{\rho} \cdot \dot{\boldsymbol{\rho}}$$

$$\rho\ddot{\rho} = \boldsymbol{\rho} \cdot \ddot{\boldsymbol{\rho}} + \dot{\boldsymbol{\rho}} \cdot \dot{\boldsymbol{\rho}} - \dot{\rho}^2$$

$$\rho\dddot{\rho} = \boldsymbol{\rho} \cdot \dddot{\boldsymbol{\rho}} + 3\dot{\boldsymbol{\rho}} \cdot \ddot{\boldsymbol{\rho}} - 3\dot{\rho}\ddot{\rho}$$

Differenced one-way doppler may be obtained only when two stations receive one-way doppler at the same observation time. It is an artificial data type calculated by the TDEP:

$$f_{d1}(i, j) = f_{1i} - f_{1j}$$

The TDEP and ODP observe the convention that $i < j$ in their numerical identifications.

Occultation time in the ODP is the instant of immersion or emersion of the probe behind the target body as seen from a tracking station. The ODP uses a Newton-Raphson iterative procedure to obtain this data type, using the observed value as an initial approximation. The data can be from a Moon, Venus, or Mars target but is normally obtained from lunar missions only.

For the rth iteration,

$$\left(T_0^{(r)} - T_0^{(r-1)}\right) \left.\frac{d(\phi_p - \phi_M)}{dt}\right|_{T_0^{(r-1)}} = \phi_m - \phi_p$$

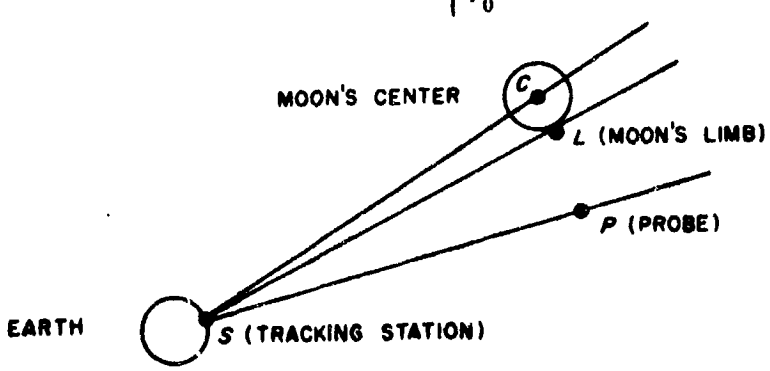

where

$$\phi_M = \text{angle CSL} = \sin^{-1} \frac{R_M}{|\rho_m|}$$

$$\phi_p = \text{angle CSP} = \cos^{-1} \frac{\boldsymbol{\rho} \cdot \boldsymbol{\rho}_m}{|\boldsymbol{\rho}|\,|\boldsymbol{\rho}_m|}$$

$$\boldsymbol{\rho}_m = \mathbf{r}_m - \mathbf{R}_i$$

R_m = radius of Moon, distance CL

$\mathbf{r}_m$ = geocentric position of Moon

$$\frac{d(\phi_p - \phi_m)}{dt} = \frac{\boldsymbol{\rho} \cdot \boldsymbol{\rho}_m}{a_1} \left[\left(\frac{a_2}{\rho^2} + \frac{a_3}{\rho_m^2} \right) - a_4 \right] + \frac{a_3 R_m}{\rho_m^2 \sqrt{\rho_m^2 - R_m^2}}$$

$$a_1 = |\boldsymbol{\rho}|\,|\boldsymbol{\rho}_m| \sin \phi_p$$

$$a_2 = \boldsymbol{\rho} \cdot \dot{\boldsymbol{\rho}}_m$$

$$a_3 = \boldsymbol{\rho}_m \cdot \dot{\boldsymbol{\rho}}_m$$

$$a_4 = \boldsymbol{\rho} \cdot \dot{\boldsymbol{\rho}}_m + \boldsymbol{\rho}_m \cdot \dot{\boldsymbol{\rho}}$$

Impact time, the instant of the probe's impact on the visible side of the target, is likewise calculated by a Newton-Raphson procedure:

$$\left(T_I^{(r)} - T_I^{(r-1)}\right) \; |\dot{\mathbf{r}} - \dot{\mathbf{r}}_m| = |\mathbf{r} - \mathbf{r}_m| - R_m$$

D. Refraction and Vertical Corrections

Two types of corrections must be applied to ODP-calculated data types in order that they match the observed data types. They are the error in refraction ($\Delta_r F$) and the displacement of the bubble vertical from the spheriodal zenith ($\Delta_v F$).

The refraction errors in tracking data have been determined empirically by D. Cain:

$$\Delta_r \rho = [0.0018958/(\sin \gamma + 0.06483)^{1.4}] \frac{n}{340.0}$$

$$\Delta_r \dot{\rho} = \frac{0.0018958}{\tau} \left[\frac{1}{(\sin A + 0.06483)^{1.4}} - \frac{1}{(\sin B + 0.06483)^{1.4}} \right] \frac{n}{340.0}$$

where

τ = doppler count interval, sec

n = index of refraction (nominally 3[illegible].0)

$$A = \gamma + \frac{\tau \dot{\gamma}}{2}$$

$$B = \gamma - \frac{\tau \dot{\gamma}}{2}$$

$$\Delta_r \gamma = 57.2957795 \frac{n}{340.0} b_1 b_2 \qquad \gamma < 0.3 \text{ radians}$$

$$\Delta_r \gamma = 57.2957795 \; n \times 10^{-6} \frac{\cos \gamma}{\sin \gamma} \qquad \gamma \geq 0.3 \text{ radians}$$

$$\Delta_r \alpha = \frac{\Delta_r \gamma \cos \phi \sin^2 \alpha}{\cos^2 \gamma \sin \sigma} \qquad \delta < 87^\circ$$

$$\Delta_r \delta = \frac{(\sin \phi \cos \gamma - \sin \gamma \cos \phi \cos \sigma) \Delta_r \gamma}{\cos \delta} \qquad \delta < 87^\circ$$

$$\Delta_r \alpha = \Delta_r \delta = 0 \qquad \delta \geq 87^\circ$$

where

$$b_1 = 1.0 - (1.216 \times 10^5\, b_3\, \gamma_{rad}) - [51.0 - 300.0\, \gamma_{rad}] \sqrt{b_3}$$

$$b_2 = [7.0 \times 10^{-4}/(0.0589 + \gamma_{rad})] - 1.26 \times 10^{-3}$$

$$b_3 = \frac{1}{10^3\,(r - R_e)}$$

γ_{rad} = elevation angle, radians

R_e = Earth equatorial radius

The optical hour angle and declination corrections are determined as above but $\Delta_r \gamma$ is calculated differently:

$$\Delta_r \gamma = \tan^{-1}\left(\frac{b_4}{\rho - b_5}\right)$$

where

$$b_4 = \frac{0.00211}{(\gamma_{rad} + 0.0598)^{2.42}}$$

$$b_5 = \sqrt{b_6^2 - R_e^2 + R_e^2 \sin^2 \gamma} - R_e \sin \gamma$$

$$b_6 = R_e + 51.2064$$

The vertical corrections are

$$\Delta_v \alpha = \frac{v}{\cos \phi}$$

$$\Delta_v \gamma = u \cos \sigma$$

$$\Delta_v \sigma = u \sin \sigma \frac{\sin \gamma}{\cos \gamma}$$

$$\Delta_v \delta = 0$$

where

u = north-south displacement of vertical

v = east-west displacement of vertical

E. The Partial Derivatives

Several methods are used to obtain the partials of the form $\partial F/\partial Q$ for the many data types F and parameters Q.

The parameters are of four types:

1. Type I (initial probe conditions), denoted by r_0

   $x_0, y_0, z_0, \dot{x}_0, \dot{y}_0, \dot{z}_0$

2. Type II (physical constants), denoted by q

   GM_e Earth gravitational constant

   R_e Earth radius that scales the lunar ephemeris

   γB solar pressure constant

   GM_m Moon gravitational constant

   M_v mass of Venus

   M_r mass of Mars

   M_j mass of Jupiter

   J Earth second harmonic coefficient

   H Earth third harmonic coefficient

   D Earth fourth harmonic coefficient

   a_e astronomical unit

3. Type III (velocity of light), denoted by c

4. Type IV (station locations), denoted by S_i

   R_i Earth radius at station i

   ϕ_i geocentric latitude of station i

   λ_i longitude of station i

Occultation and impact time partials require a somewhat different computational logic than TDEP data partials, and will be treated in a separate subsection.

Types I and II partials are obtained by means of the chain rule, i.e.,

$$\frac{\partial F}{\partial r_0} = \frac{\partial F}{\partial r} \frac{\partial r}{\partial r_0}$$

$$\frac{\partial F}{\partial q} = \frac{\partial F}{\partial r} \frac{\partial r}{\partial q}$$

where r = a position or velocity at time t.

Therefore the calculation of partials of data types with respect to instantaneous position and velocity is necessary. Using the notation of the previous sections these partials may be written as

$$\frac{\partial \rho_i}{\partial x} = L_x \qquad x \to y, z \qquad\qquad \frac{\partial \rho_i}{\partial \dot{x}} = 0 \qquad \dot{x} \to \dot{y}, \dot{z}$$

$$\frac{\partial \dot{\rho}_i}{\partial x} = \frac{1}{\rho_i} (\dot{x} + \omega y_i - \dot{\rho}_i L_x) \qquad\qquad \frac{\partial \dot{\rho}_i}{\partial \dot{x}} = L_x \qquad \dot{x} \to \dot{y}, \dot{z}$$

$$\frac{\partial \dot{\rho}_i}{\partial y} = \frac{1}{\rho_i} (\dot{y} - \omega x_i - \dot{\rho}_i L_y)$$

$$\frac{\partial \dot{\rho}_i}{\partial z} = \frac{1}{\rho_i} (\dot{z} - \dot{\rho}_i L_z)$$

where ω = Earth rotation rate

$$\frac{\partial \gamma_i}{\partial x} = \frac{\tilde{D}_x}{\rho_i} \qquad x \to y, z$$

$$\frac{\partial \gamma_i}{\partial \dot{x}} = 0 \qquad \dot{x} \to \dot{y}, \dot{z}$$

where $\tilde{D}_x = \sin\gamma_i\,[\sin\sigma_i \sin(\alpha_G + \lambda_i) + \cos\sigma_i \sin\phi_i \cos(\alpha_G + \lambda_i)] + \cos\phi_i \cos(\alpha_G + \lambda_i) \cos\gamma_i$

$$\tilde{D}_y = -\sin\gamma_i\,[\sin\sigma_i \cos(\alpha_G + \lambda_i) - \cos\sigma_i \sin\phi_i \sin(\alpha_G + \lambda_i)] + \cos\phi_i \sin(\alpha_G + \lambda_i) \cos\gamma_i$$

$$\tilde{D}_z = -\cos\sigma_i \cos\phi_i \sin\gamma_i + \sin\phi_i \cos\gamma_i$$

$$\frac{\partial\sigma_i}{\partial x} = \frac{\tilde{A}_x}{\rho_i} \qquad x \to y,\ z$$

$$\frac{\partial\sigma_i}{\partial \dot{x}} = 0 \qquad \dot{x} \to \dot{y},\ \dot{z}$$

where

$$\tilde{A}_x = -\cos\sigma_i \sin(\alpha_G + \lambda_i) + \sin\sigma_i \sin\phi_i \cos(\alpha_G + \lambda_i)$$

$$\tilde{A}_y = \cos\sigma_i \cos(\alpha_G + \lambda_i) + \sin\sigma_i \sin\phi_i \sin(\alpha_G + \lambda_i)$$

$$\tilde{A}_z = -\sin\sigma_i \cos\phi_i$$

$$\frac{\partial\delta_i}{\partial x} = \frac{-\cos\alpha_{ri} \sin\delta_i}{\rho_i} \qquad \frac{\partial\delta_i}{\partial \dot{x}} = 0 \qquad \dot{x} \to \dot{y},\ \dot{z}$$

$$\frac{\partial\delta_i}{\partial y} = \frac{-\sin\alpha_{ri} \sin\delta_i}{\rho_i}$$

$$\frac{\partial\delta_i}{\partial z} = \frac{\cos\delta_i}{\rho_i}$$

$$\frac{\partial\alpha_i}{\partial x} = \frac{\sin\alpha_{ri}}{\rho_i \cos\delta_i} \qquad \frac{\partial\alpha_i}{\partial \dot{x}} = 0 \qquad \dot{x} \to \dot{y},\ \dot{z}$$

$$\frac{\partial \alpha_i}{\partial y} = \frac{-\cos \alpha_{ri}}{\rho_i \cos \delta_i}$$

$$\frac{\partial \alpha_i}{\partial z} = 0$$

$$\frac{\partial f_{1i}}{\partial x} = \frac{\Omega_2}{c} \frac{\partial \dot{\rho}_i}{\partial x} \qquad x \to y, z, \dot{x}, \dot{y}, \dot{z}$$

$$\frac{\partial f_{c3i,q}}{\partial x} = \frac{\Omega_4}{c} \left(\frac{\partial \dot{\rho}_i}{\partial x} + \frac{\partial \dot{\rho}_q}{\partial x} \right) \qquad x \to y, z, \dot{x}, \dot{y}, \dot{z}$$

$$\frac{\partial f_{3i,q}}{\partial x} = \frac{\Omega_6}{c} \left(\frac{\partial \dot{\rho}_i}{\partial x} + \frac{\partial \dot{\rho}_q}{\partial x} \right) \qquad x \to y, z, \dot{x}, \dot{y}, \dot{z}$$

$$\frac{\partial f_{d1i,j}}{\partial x} = \frac{\Omega_2}{c} \left(\frac{\partial \dot{\rho}_i}{\partial x} - \frac{\partial \dot{\rho}_i}{\partial x} \right) \qquad x \to y, z, \dot{x}, \dot{y}, \dot{z}$$

where

$$\Omega_2 = \omega_2 \left[f_T + D (t - t_0) \right]$$

$$\Omega_4 = \omega_4 f_q$$

$$\Omega_6 = \omega_6 f_q$$

After the above partials are calculated, the Type I partials are obtained by the chain rule. The partials $\partial r/\partial r_0$ are interpolated from the probe ephemeris tape.

The same procedure applies to the Type II partials except that the $\partial r/\partial q_0$ are not on the probe ephemeris. Here we must return to the equations of motion and derive the formulas for the partials of acceleration with respect to physical constants, $\partial \ddot{r}/\partial q$. These partials may then be numerically integrated to obtain $\partial r/\partial q$:

$$\frac{\partial \ddot{x}}{\partial GM_e} = \frac{-x g_1}{r^3}$$

$$\frac{\partial \ddot{y}}{\partial GM_e} = \frac{-y g_1}{r^3}$$

$$\frac{\partial \ddot{z}}{\partial GM_e} = \frac{-z g_2}{r^3}$$

where

$$g_1 = 1 + \left[3 - 42\left(\frac{z}{r}\right)^2 + 63\left(\frac{z}{r}\right)^4\right]\left[\frac{D}{7}\left(\frac{R_e}{r}\right)^4\right] + \left[H\left(\frac{R_e}{r}\right)^3\right]\left[3 - 7\left(\frac{z}{r}\right)^2\right]\frac{z}{r}$$

$$+ \left[J\left(\frac{R_e}{r}\right)^2\right]\left[1 - 5\left(\frac{z}{r}\right)^2\right]$$

$$g_2 = 1 + \left[15 - 70\left(\frac{z}{r}\right)^2 + 63\left(\frac{z}{r}\right)^4\right]\left[\frac{D}{7}\left(\frac{R_e}{r}\right)^4\right] - \left[H\left(\frac{R_e^3}{r}\right)\right]\left[1 - 10\left(\frac{z}{r}\right)^2\right.$$

$$\left. + \frac{35}{3}\left(\frac{z}{r}\right)^4\right]\frac{3}{5}\frac{r}{z} + \left[J\left(\frac{R_e}{r}\right)^2\right]\left[3 - 5\left(\frac{z}{r}\right)^2\right]$$

$$\frac{\partial \dot{x}}{\partial R_e} = \frac{-GM_m}{R_e}\left\{2x_m\left[\frac{1}{|\mathbf{r}_m - \mathbf{r}|^3} - \frac{1}{r_m^3}\right] - 3\,\frac{(\mathbf{r}\cdot\mathbf{r}_m - r^2)(x - x_m)}{|\mathbf{r}_m - \mathbf{r}|^5} - \frac{3x}{|\mathbf{r}_m - \mathbf{r}|^3}\right\} \qquad x \to y, z$$

$$\frac{\partial x}{\partial \gamma B} = \frac{c_1 A_p (x - x_s)}{M_p\,|\mathbf{r} - \mathbf{r}_s|^3} \qquad x \to y, z$$

where

$c_1 = 1.02 \times 10^8$

A_p = surface area of probe, m^2

M_p = mass of probe, kg

$$\frac{\partial \ddot{x}}{\partial GM_m} = -\left[\frac{x_m}{r_m^3} + \frac{(x - x_m)}{|\mathbf{r}_m - \mathbf{r}|^3}\right] \qquad x \to y, z$$

$$\frac{\partial \ddot{x}}{\partial M_v} = -GM_s\left[\frac{x_v}{r_v^3} + \frac{(x - x_v)}{|\mathbf{r}_v - \mathbf{r}|^3}\right] \qquad x \to y, z$$

$$\frac{\partial \ddot{x}}{\partial M_r} = -GM_s\left[\frac{x_r}{r_r^3} + \frac{(x - x_r)}{|\mathbf{r}_r - \mathbf{r}|^3}\right] \qquad x \to y, z$$

$$\frac{\partial \ddot{x}}{\partial M_j} = -GM_s\left[\frac{x_j}{r_j^3} + \frac{(x - x_j)}{|\mathbf{r}_j - \mathbf{r}|^3}\right] \qquad x \to y, z$$

$$\frac{\partial \ddot{x}}{\partial J} = -x\left[1 - 5\left(\frac{z}{r}\right)^2\right]\frac{GM_e}{r^2}\,\frac{R_e^2}{r^3} \qquad x \to y$$

$$\frac{\partial \ddot{z}}{\partial J} = -z\left[3 - 5\left(\frac{z}{r}\right)^2\right]\frac{GM_e}{r^2}\,\frac{R_e^2}{r^3}$$

$$\frac{\partial \ddot{x}}{\partial H} = x\left[7\left(\frac{z}{r}\right)^2 - 3\right]\frac{z}{r}\,\frac{GM_e}{r^3}\,\frac{R_e^3}{r^3} \qquad x \to y$$

$$\frac{\partial \ddot{z}}{\partial H} = \left[1 - 10\left(\frac{z}{r}\right)^2 + \frac{35}{3}\left(\frac{z}{r}\right)^4\right]\frac{3r}{5}\,\frac{GM_e}{r^3}\,\frac{R_e^3}{r^3}$$

$$\frac{\partial \ddot{x}}{\partial D} = -x\left[3 - 42\left(\frac{z}{r}\right)^2 + 63\left(\frac{z}{r}\right)^4\right]\frac{GM_e}{7r^3}\,\frac{R_e^4}{r^4} \qquad x \to y$$

$$\frac{\partial \ddot{z}}{\partial D} = -z\left[15 - 70\left(\frac{z}{r}\right)^2 + 63\left(\frac{z}{r}\right)^4\right]\frac{GM_e}{7r^3}\,\frac{R_e^4}{r^4}$$

$$\frac{\partial \dot{x}}{\partial a_e} = \frac{1}{a_e} \sum_{k=1}^{4} GM_k \left[x_k \left(\frac{1}{|r_k - r|^3} - \frac{1}{r_k^3} \right) - \frac{3(r^2 - r \cdot r_k)(x - x_k)}{|r_k - r|^5} \right] \qquad x \to y, z$$

where

$k = 1 =$ Sun

$k = 2 =$ Venus

$k = 3 =$ Mars

$k = 4 =$ Jupiter

Using the above acceleration partials, if

$$B = \begin{Bmatrix} 0 & 0 & \cdots & 0 \\ 0 & 0 & \cdots & 0 \\ 0 & 0 & \cdots & 0 \\ \dfrac{\partial \dot{x}}{\partial q_1} & \dfrac{\partial \dot{x}}{\partial q_2} & \cdots & \dfrac{\partial \dot{x}}{\partial q_n} \\ \dfrac{\partial y}{\partial q_1} & \dfrac{\partial \dot{y}}{\partial q_2} & \cdots & \dfrac{\partial \dot{y}}{\partial q_n} \\ \dfrac{\partial \dot{z}}{\partial q_1} & \dfrac{\partial \dot{z}}{\partial q_2} & \cdots & \dfrac{\partial \dot{z}}{\partial q_n} \end{Bmatrix}$$

$$U = \begin{Bmatrix} \dfrac{\partial x}{\partial x_0} & \cdots & \dfrac{\partial x}{\partial \dot{z}_0} \\ \dfrac{\partial y}{\partial x_0} & \cdots & \dfrac{\partial y}{\partial \dot{z}_0} \\ \dfrac{\partial z}{\partial x_0} & \cdots & \dfrac{\partial z}{\partial \dot{z}_0} \\ \dfrac{\partial \dot{x}}{\partial x_0} & \cdots & \dfrac{\partial \dot{x}}{\partial \dot{z}_0} \\ \dfrac{\partial \dot{y}}{\partial x_0} & \cdots & \dfrac{\partial \dot{y}}{\partial \dot{z}_0} \\ \dfrac{\partial \dot{z}}{\partial x_0} & \cdots & \dfrac{\partial \dot{z}}{\partial \dot{z}_0} \end{Bmatrix}$$

and

$$\Upsilon = \begin{Bmatrix} \dfrac{\partial x}{\partial q_1} & \cdots & \dfrac{\partial x}{\partial q_n} \\ \dfrac{\partial y}{\partial q_1} & \cdots & \dfrac{\partial y}{\partial q_n} \\ \dfrac{\partial z}{\partial q_1} & \cdots & \dfrac{\partial z}{\partial q_n} \\ \dfrac{\partial \dot{x}}{\partial q_1} & \cdots & \dfrac{\partial \dot{x}}{\partial q_n} \\ \dfrac{\partial \dot{y}}{\partial q_1} & \cdots & \dfrac{\partial \dot{y}}{\partial q_n} \\ \dfrac{\partial \dot{z}}{\partial q_1} & \cdots & \dfrac{\partial \dot{z}}{\partial q_n} \end{Bmatrix}$$

then the partials $\partial r/\partial q$ are obtained from the following integral using Simpson's method:

$$\Upsilon(t) = U(t)\int_{t_0}^{t} U^{-1}(t^*)\, B(t^*)\, dt^*$$

The Simpson procedure uses an integration step based on the data times; if no data times exist in the interval, the time steps employed in the trajectory integration are used. The inverse of the U matrix is obtained not by the usual numerical methods but by an inspection method. If the U matrix is partitioned

$$U = \left[\begin{array}{c|c} U_{11} & U_{12} \\ \hline U_{21} & U_{22} \end{array}\right]$$

then the inverse may be written as

$$U^{-1} = \left[\begin{array}{c|c} U_{22}^T & -U_{12}^T \\ \hline -U_{21}^T & U_{11}^T \end{array}\right]$$

The following constraint between the astronomical unit and the solar and planetary gravitational constants is employed when the value for a_e is solved for the ODP:

$$GM_s = 3.9640160 \times 10^{-14}\, a_e^3$$

$$GM_v = \frac{M_v}{M_s}\, GM_s$$

$$GM_r = \frac{M_r}{M_s}\, GM_s$$

$$GM_l = \frac{M_l}{M_s}\, GM_s$$

The Types III and IV partials, $\partial F/\partial c$ and $\partial F/\partial S_i$, are calculated from explicit formulas with no integration or chain rule application necessary. The velocity of light formulas are:

$$\frac{\partial \rho_i}{\partial c} = \frac{-\rho_i}{c}$$

$$\frac{\partial \dot{\rho}_i}{\partial c} = \frac{-\dot{\rho}_i}{c}$$

$$\frac{\partial \gamma_i}{\partial c} = \frac{\partial \sigma_i}{\partial c} = \frac{\partial d_i}{\partial c} = \frac{\partial \delta_i}{\partial c} = 0$$

$$\frac{\partial f_{1i}}{\partial c} = \frac{-\Omega_2 \dot{\rho}_i}{c^2}$$

$$\frac{\partial f_{c\,3i,q}}{\partial c} = \frac{-\Omega_4}{c^2} (\dot{\rho}_q + \dot{\rho}_i)$$

$$\frac{\partial f_{3i,q}}{\partial c} = \frac{-\Omega_6}{c^2} (\dot{\rho}_q + \dot{\rho}_i)$$

$$\frac{\partial f_{d1i,j}}{\partial c} = \frac{-\Omega_2}{c^2} (\dot{\rho}_i + \dot{\rho}_j)$$

The partials with respect to station locations are derived from the data type equations and the equations for $\mathbf{R}_i$:

$$X_i = R_i \cos(\alpha_G + \lambda_i) \cos \phi_i$$

$$Y_i = R_i \sin(\alpha_G + \lambda_i) \cos \phi_i$$

$$Z_i = R_i \sin \phi_i$$

Thus we have:

$$\frac{\partial \rho_i}{\partial R_i} = \frac{1}{R_i} (X_i L_x + Y_i L_y + Z_i L_z)$$

$$\frac{\partial \rho_i}{\partial \phi_i} = Z_i \{ [L_x \cos (\alpha_G + \lambda_i) + L_y \sin (\alpha_G + \lambda_i)] - L_z R_i \cos \phi_i \}$$

$$\frac{\partial \rho_i}{\partial \lambda_i} = Y_i L_x - X_i L_y$$

$$\frac{\partial \dot{\rho}_i}{\partial R_i} = \frac{1}{R_i} (X_i L_x' + Y_i L_y' + Z_i L_z')$$

$$\frac{\partial \dot{\rho}_i}{\partial \phi_i} = - Z_i \{ [L_x' \cos (\alpha_G + \lambda_i) + L_y' \sin (\alpha_G + \lambda_i)] + L_z' R_i \cos \phi_i \}$$

$$\frac{\partial \dot{\rho}_i}{\partial \lambda_i} = - Y_i L_x' + X_i L_y'$$

where

$$L_x' = \frac{1}{\rho_i} (- \dot{x} - 2\omega Y_i + \dot{\rho}_i L_x + \omega y)$$

$$L_y' = \frac{1}{\rho_i} (- \dot{y} + 2\omega X_i + \dot{\rho}_i L_y - \omega x)$$

$$L_z' = \frac{1}{\rho_i} (- \dot{z} + \dot{\rho}_i L_z)$$

$$\frac{\partial \gamma_i}{\partial R_i} = \frac{-1}{R_i \rho_i} (\tilde{D}_x X_i + \tilde{D}_y Y_i + \tilde{D}_z Z_i)$$

$$\frac{\partial \gamma_i}{\partial \lambda_i} = \frac{1}{\rho_i} \{ Z_i [\tilde{D}_x \cos (\alpha_G + \lambda_i) + \tilde{D}_y \sin (\alpha_G + \lambda_i)] - \tilde{D}_z R_i \cos \phi_i \}$$

$$\frac{\partial \gamma_i}{\partial \lambda_i} = \frac{1}{\rho_i} (Y_i \tilde{D}_x - X_i \tilde{D}_y)$$

$$\frac{\partial \sigma_i}{\partial R_i} = \frac{-1}{R_i \rho_i} (X_i \tilde{A}_x + Y_i \tilde{A}_y + Z_i \tilde{A}_z)$$

$$\frac{\partial \sigma_i}{\partial \phi_i} = \frac{1}{\rho_i} \{ Z_i [\tilde{A}_x \cos (\alpha_G + \lambda_i) + \tilde{A}_y \sin (\alpha_G + \lambda_i)] - \tilde{A}_z R_i \cos \phi_i \}$$

$$\frac{\partial \sigma_i}{\partial \lambda_i} = \frac{1}{\rho_i} (Y_i \tilde{A}_x - X_i \tilde{A}_y)$$

$$\frac{\partial \gamma_i}{\partial S_i} (\tilde{D}_x) \rightarrow \frac{\partial \delta_i}{\partial S_i} (D_x)$$

$$\frac{\partial \sigma_i}{\partial S_i} (\tilde{A}_x) \rightarrow \frac{\partial \alpha_i}{\partial S_i} (A_x)$$

where

$$D_x = -\sin \delta_i \cos \alpha_{ri}$$

$$D_y = -\sin \delta_i \sin \alpha_{ri}$$

$$D_z = \cos \delta_i$$

$$A_x = -\sin \alpha_{ri}$$

$$A_y = \cos \alpha_{ri}$$

$$A_z = 0$$

$$\frac{\partial f_{1i}}{\partial S_i} = \frac{\Omega_2}{c} \frac{\partial \dot{\rho}_i}{\partial S_i}$$

$$\frac{\partial f_{c3i,q}}{\partial S_i} = \frac{\Omega_4}{c} \frac{\partial \dot{\rho}_i}{\partial S_i}$$

$$\frac{\partial f_{3i,q}}{\partial S_i} = \frac{\Omega_6}{c} \frac{\partial \dot{\rho}_i}{\partial S_i}$$

$$\frac{\partial f_{d1i,j}}{\partial S_i} = \frac{\Omega_2}{c} \frac{\partial \dot{\rho}_i}{\partial S_i}$$

$$\frac{\partial f_{c3i,q}}{\partial S_q} = \frac{\Omega_4}{c} \frac{\partial \dot{\rho}_q}{\partial S_q}$$

$$\frac{\partial f_{3i,q}}{\partial S_q} = \frac{\Omega_6}{c} \frac{\partial \dot{\rho}_q}{\partial S_q}$$

$$\frac{\partial f_{d1i,j}}{\partial S_j} = \frac{\Omega_2}{c} \frac{\partial \dot{\rho}_j}{\partial S_j}$$

The following partials are necessary for the calculation of occultation and impact time partials, which are obtained by chain rule application:

$$\frac{\partial x_i}{\partial R_i} = \frac{x_i}{R_i} \qquad x \to y, z$$

$$\frac{\partial x_i}{\partial \phi_i} = -R_i \sin \phi_i \cos (\alpha_G + \lambda_i)$$

$$\frac{\partial y_i}{\partial \phi_i} = -R_i \sin \phi_i \sin (\alpha_G + \lambda_i)$$

$$\frac{\partial z_i}{\partial \phi_i} = R_i \cos \phi_i$$

$$\frac{\partial x_i}{\partial \lambda_i} = -y_i$$

$$\frac{\partial y_i}{\partial \lambda_i} = x_i$$

$$\frac{\partial z_i}{\partial \lambda_i} = 0$$

$$\frac{\partial r_i}{\partial r_0}, \frac{\partial r_i}{\partial q}, \frac{\partial r_i}{\partial c} = 0$$

$$\frac{\partial x_m}{\partial R_e} = \frac{x_m}{R_e} \qquad x \to y, z$$

$$\frac{\partial r_m}{\partial r_0}, \frac{\partial r_m}{\partial c}, \frac{\partial r_m}{\partial S_i}, = 0$$

$$\left.\frac{\partial r_m}{\partial q}\right|_{q \neq R_e} = 0$$

The occultation and impact time partials are obtained by

$$\frac{\partial T_0}{\partial Q} = \left[\frac{\boldsymbol{\rho} \cdot \boldsymbol{\rho}_m \left(\dfrac{\boldsymbol{\rho}_m \cdot \dfrac{\partial \boldsymbol{\rho}_m}{\partial Q}}{\rho_m^2} + \dfrac{\boldsymbol{\rho} \cdot \dfrac{\partial \boldsymbol{\rho}}{\partial Q}}{\rho^2} \right) - \boldsymbol{\rho} \cdot \dfrac{\partial \boldsymbol{\rho}_m}{\partial Q} - \boldsymbol{\rho}_m \cdot \dfrac{\partial \boldsymbol{\rho}}{\partial Q} + \dfrac{|\boldsymbol{\rho}|\,|\boldsymbol{\rho}_m| \sin \phi_p \, R_m}{\rho_m^2 \sqrt{\rho_m^2 - R_m^2}} \quad \boldsymbol{\rho}_m \cdot \dfrac{\partial \boldsymbol{\rho}_m}{\partial Q}}{\boldsymbol{\rho} \cdot \boldsymbol{\rho}_m \left(\dfrac{\boldsymbol{\rho}_m \cdot \dot{\boldsymbol{\rho}}_m}{\rho_m^2} + \dfrac{\boldsymbol{\rho} \cdot \dot{\boldsymbol{\rho}}}{\rho^2} \right) - \boldsymbol{\rho} \cdot \dot{\boldsymbol{\rho}}_m - \boldsymbol{\rho}_m \cdot \dot{\boldsymbol{\rho}} + \dfrac{|\boldsymbol{\rho}|\,|\boldsymbol{\rho}_m| \sin \phi_p \, R_m}{\rho_m^2 \sqrt{\rho_m^2 - R_m^2}} \quad (\boldsymbol{\rho}_m \cdot \dot{\boldsymbol{\rho}}_m)} \right]$$

$$\frac{\partial T_I}{\partial Q} = \frac{-1}{\boldsymbol{\rho} \cdot \dot{\boldsymbol{\rho}}} \left(\boldsymbol{\rho} \cdot \frac{\partial \boldsymbol{\rho}}{\partial Q} \right)$$

In the derivation of the above formulas, the partials of the radius of the target with respect to the ODP physical constants, $\partial R_m / \partial Q$, were assumed to be zero.

F. Weighting of the Partials

Weighting in the ODP is accomplished by a priori methods. The normal scheme as devised by T. Hamilton employs a codeword which is used in a table lookup procedure. This codeword is input to the TDEP, which passes it to the ODP as part of each data record. The word consists of six groups of three bits each. The value of each group (0, 1, 2, 3, or 4) determines a part of the weight, which is calculated as follows:

$$w_j = \sum_{p=1}^{6} S_{pjk}^2 \, g_{pj}^2 \max \left(\frac{T_{pjk}}{\tau}, 1 \right)$$

where

p = group index

j = data type index

k = numerical value of group p

T_{pjk}, S_{pjk} = pth, jth, kth entries in the T and S weighting tables, nominally pre-set in the ODP.

The g_{pj} value is computed from formulas stored in the ODP. It may also be thought of as a tabular entry as depicted on the following page.

Group index p		1	2	3	4	5	6
Data type index	j						
ρ_i	1	1	1	$\dot{\rho}_i$	ρ_i	$\Delta_r \rho_i$	1
$\dot{\rho}_i$	2	1	ρ_i	ρ_i	$\Delta_r \dot{\rho}_i$	1	
γ_i	3	1	1	1	$\Delta_r \gamma_i$		
σ_i	4	$\frac{1}{\cos \gamma_i}$	1	1			
δ_i	5	1	1	1	$\Delta_r \delta_i$		
α_i	6	$\frac{1}{\cos \delta_i}$	1	1	$\Delta_r \alpha_i$		
f_{1i}	7	Ω_2	Ω_2	$\frac{1}{\tau}$	$\frac{\Omega_2}{c}$		
f_{c3i}	8	$\frac{\Omega_4}{c}$	$\frac{1}{\tau}$	$\frac{\Omega_4}{c} \frac{(\rho_i + \rho_q)}{2}$	$\frac{1}{\sqrt{3}\tau}$	$\frac{\Omega_4}{\tau c} (\lvert \Delta_r \dot{\rho}_i \rvert + \lvert \Delta_r \dot{\rho}_q \rvert)$	$\frac{\Omega_4}{c}$
f_{3i}	9	$\frac{\Omega_6}{c}$	$\frac{1}{\tau}$	Ω_6	$\frac{\Omega_6}{c} (\lvert \Delta_r \dot{\rho}_i \rvert + \lvert \Delta_r \dot{\rho}_q \rvert)$	$\frac{\Omega_6}{c}$	
f_{d1i}	10	$\frac{\Omega_2}{c} \rho_i \rho_j$	$\frac{\Omega_2}{c} (\rho_i - \rho_j)$	$\frac{1}{\tau}$	$\frac{\Omega_2}{c} (\lvert \Delta_r \dot{\rho}_i \rvert + \lvert \Delta_r \dot{\rho}_j \rvert)$	$\frac{\Omega_2}{c}$	

The above option is replaced upon input of a priori coefficients, $\sqrt{\tilde{w}_j}$. The weights are then calculated by

$$\sqrt{w_j} = \sqrt{\tilde{w}_j}\ \beta_1 \beta_2 \sqrt{\frac{60}{\tau_s}}$$

where

β_1 = 1, when not weighting azimuth or hour angle

$\beta_1 = \dfrac{1}{\cos \gamma_1}$, when weighting azimuth angle

$\beta_1 = \dfrac{1}{\cos \delta_i}$, when weighting hour angle

β_2 = 1, when weighting azimuth angle

$\beta_2 = 1 + \dfrac{18}{(\gamma_i + 1)^2}$, when not weighting azimuth angle

τ_s = data sample rate, sec.

Provision has also been made for unit weighting when the printing of partials is requested. Thus in the normal equations, $w^{-1} = 1$.

G. Mapping of the Covariance Matrix

The statistical information contained in the covariance matrix $\Gamma(t_0)$ may be projected (mapped) to any later time t. A frequent application of this procedure is the mapping to the time of impact/closest approach. The procedure employs a mapping matrix

$$U_{t_0,t} = \frac{\partial Q_t}{\partial Q_{t_0}}$$

which is an extended matrix of variational partials representing all estimated parameters Q_{t_0}. If the parameter set Q_{t_0} consists only of the six initial conditions, then this matrix is identical to the familiar U matrix. A similar mapping matrix is employed for including the effect of the considered parameter set $\tilde{Q}_{t_0}$:

$$V_{t_0,t} = \frac{\partial Q_t}{\partial \tilde{Q}_{t_0}}$$

The mapping operation is then accomplished by

$$\Gamma_t = U\Gamma_{t_0}U^T - V\Gamma_{\tilde{Q}}\,\nu^T J^{-1} U^T - U J^{-1}\nu\Gamma_{\tilde{Q}} V^T + V\Gamma_{\tilde{Q}} V^T$$

If no parameters are being considered, this reduces to

$$\Gamma_t = U\Gamma_{t_0}U^T$$

(See page 10 for definitions of terms.)

H. Encounter Parameters

Encounter parameters are expressed in the **B** system, where **B** is the vector from the target center of mass perpendicular to the incoming spacecraft asymptote. Two unit vectors, **T** and **R**, establish the orientation of **B**. **T** is parallel to a reference plane and **R** is orthogonal to **T** in a right-handed system. **R** and **T** may be expressed in any of four reference planes:

$\mathbf{R}_O$, $\mathbf{T}_O$	target orbital plane
$\mathbf{R}_T$, $\mathbf{T}_T$	target equatorial plane
$\mathbf{R}_Q$, $\mathbf{T}_Q$	earth equatorial plane
$\mathbf{R}_C$, $\mathbf{T}_C$	ecliptic plane

The ODP uses the target orbital plane with a supplementary output in the target equatorial plane for the mid-course maneuver program.

The standard set of encounter parameters M are

$\mathbf{R} \cdot \mathbf{R}$	as defined above
$\mathbf{B} \cdot \mathbf{T}$	as defined above
t_L	linearized time of flight
$\mathbf{S} \cdot \mathbf{R}_S$	dot products of incoming asymptote unit vector $\mathbf{S}$
$\mathbf{S} \cdot \mathbf{T}_S$	with standard $\mathbf{R}$ and $\mathbf{T}$ vectors
C_3	vis-viva energy from two-body conic

The calculation of the above parameters is based on the two-body conic of the probe with reference to the target. Thus we have, for the usual hyperbolic case:

$$\frac{1}{a} = \frac{2}{r} - \frac{v^2}{\mu}$$

$$e^2 = 1 - \frac{r^2 v^2 - (r\dot{r})^2}{\mu a}$$

$$e \sinh F = \frac{r\dot{r}}{\sqrt{-\mu a}}$$

$$e \cosh F = 1 - \frac{r}{a}$$

$$e\,\mathbf{P} = e \cosh F\, \mathbf{r} - \sqrt{\frac{-a}{\mu}}\, e \sinh F\, \dot{\mathbf{r}}$$

$$e\sqrt{e^2 - 1}\,\mathbf{Q} = \frac{e \sinh F}{r}\,\mathbf{r} - \sqrt{\frac{-a}{\mu}}\,(e \cosh F - e^2)\,\dot{\mathbf{r}}$$

$$e\,\mathbf{B} = a(1 - e^2)\,\mathbf{P} + a\sqrt{e^2 - 1}\,\mathbf{Q}$$

$$e\,\mathbf{S} = \mathbf{P} + \sqrt{e^2 - 1}\;\mathbf{Q}$$

$$\phi_s = \sin^{-1} S_z$$

Then

$$\mathbf{B} \cdot \mathbf{T} = \sqrt{\frac{-a}{\mu}}\;\frac{x\dot{y} - y\dot{x}}{\cos \phi_s}$$

$$\mathbf{B} \cdot \mathbf{R} = \frac{B_z}{\cos \phi_s}$$

$$t_L = t_f + \frac{(F - e \sinh F - \ln e)}{\sqrt{\dfrac{\mu}{-a^3}}}$$

$$C_3 = \frac{-\mu}{a}$$

Where

e = eccentricity

a = semi-major axis

r = (x, y, z) = target centered probe vector

μ = $G\,M_{\text{target}}$

F = hyperbolic anomaly

t_f = true time of flight

To express the encounter covariance matrix in terms of the standard parameters, the partials of the form $\partial M / \partial Q_i$ are necessary:

$$\Gamma_m = \frac{\partial M}{\partial Q_t} \Gamma_e \left(\frac{\partial M}{\partial Q_t}\right)^T$$

The ODP restricts Q to the six initial conditions in this case. The following standard deviations are computed from Γ_m:

$$\sigma_t = \sqrt{\Gamma_{m(t_L, t_L)}}$$ standard deviation in time of flight

$$\sigma_B = \sqrt{\Gamma_{m(\mathbf{B}\cdot\mathbf{R},\, \mathbf{B}\cdot\mathbf{R})} + \Gamma_{m(\mathbf{B}\cdot\mathbf{T},\, \mathbf{B}\cdot\mathbf{T})}}$$ standard deviation of **B** vector

$$\sigma_S = \sigma_t \sqrt{\frac{-\mu}{a}}$$ standard deviation of **S** vector

The configuration and orientation of the target dispersion ellipse are computed as follows:

$$c_m = \sqrt{\frac{1}{2}\left[\Gamma_{m(\mathbf{B}\cdot\mathbf{R},\, \mathbf{B}\cdot\mathbf{R})} - \Gamma_{m(\mathbf{B}\cdot\mathbf{T},\, \mathbf{B}\cdot\mathbf{T})}\right]^2 + \left[\Gamma_{m(\mathbf{B}\cdot\mathbf{R},\, \mathbf{B}\cdot\mathbf{T})}\right]^2}$$

$$d_m = \frac{1}{2}\left[\Gamma_{m(\mathbf{B}\cdot\mathbf{R},\, \mathbf{B}\cdot\mathbf{R})} + \Gamma_{m(\mathbf{B}\cdot\mathbf{T},\, \mathbf{B}\cdot\mathbf{T})}\right]$$

$$a = \sqrt{c_m + d_m}$$ semi-major axis

$$b = \sqrt{c_m - d_m}$$ semi-minor axis

$$\phi = \tan^{-1}\left[\frac{2\,\Gamma_{m(\mathbf{B}\cdot\mathbf{R},\, \mathbf{B}\cdot\mathbf{T})}}{\Gamma_{m(\mathbf{B}\cdot\mathbf{R},\, \mathbf{B}\cdot\mathbf{R})} - \Gamma_{m(\mathbf{B}\cdot\mathbf{T},\, \mathbf{B}\cdot\mathbf{T})}}\right]$$ inclination to target orbital plane

III. STRUCTURE OF THE LINKS

This Section presents the flow diagrams which outline the computational and logical procedures employed by the ODP.

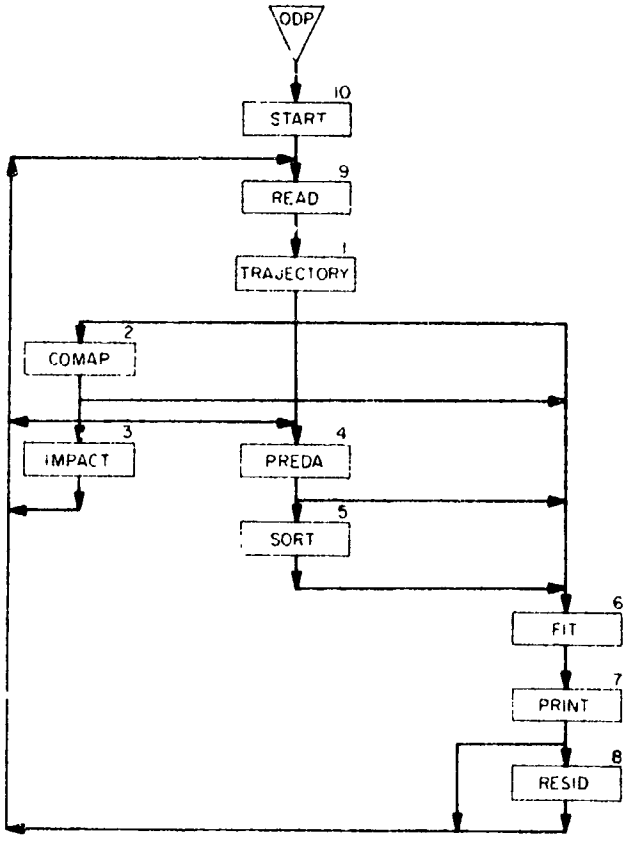

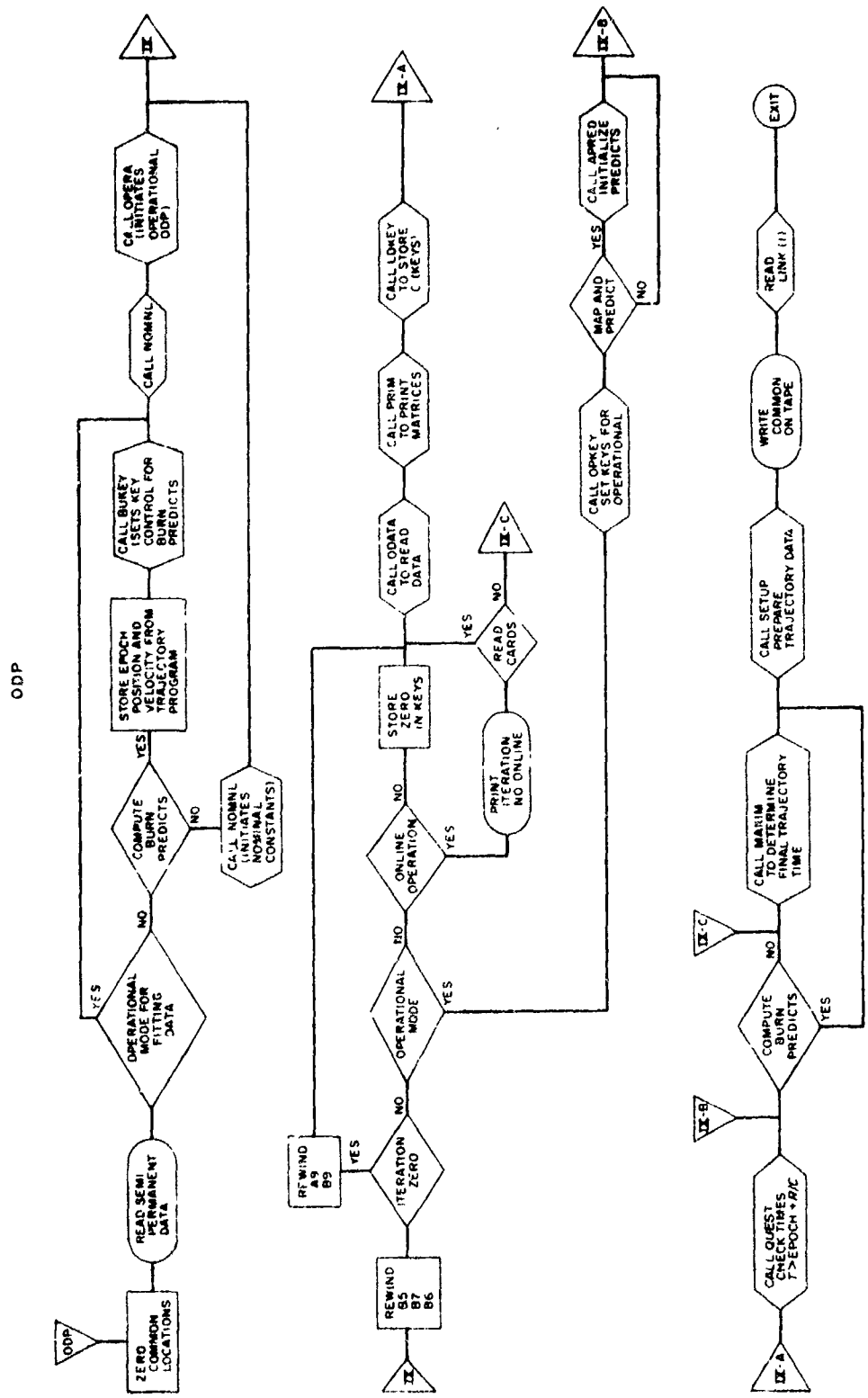
ODP
ODP
ZERO COMMON LOCATIONS
READ SEMI PERMANENT DATA
OPERATIONAL MODE FOR FITTING DATA
YES
NO
COMPUTE BURN PREDICTS
YES
NO
CALL NOMNL (INITIATES NOMINAL CONSTANTS)
STORE EPOCH POSITION AND VELOCITY FROM TRAJECTORY PROGRAM
CALL BUREY (SETS KEY CONTROL FOR BURN PREDICTS
CALL NOMNL
CALL OPERA (INITIATES OPERATIONAL ODP)
II
REWIND B5 B7 B6
II
ITERATION ZERO
YES
NO
REWIND A9 B9
OPERATIONAL MODE
YES
NO
ONLINE OPERATION
YES
NO
STORE ZERO IN KEYS
CALL ODATA TO READ DATA
YES
NO
READ CARDS
PRINT ITERATION NO ONLINE
IX-C
CALL PRIM TO PRINT MATRICES
CALL LOKEY TO STORE C (KEYS)
IX-A
CALL OPKEY SET KEYS FOR OPERATIONAL
MAP AND PREDICT
YES
NO
CALL APRED INITIALIZE PREDICTS
IX-B
IX-A
CALL QUEST CHECK TIMES T>EPOCH + P/C
IX-B
COMPUTE BURN PREDICTS
YES
NO
IX-C
CALL MAXIM TO DETERMINE FINAL TRAJECTORY TIME
CALL SETUP PREPARE TRAJECTORY DATA
WRITE COMMON ON TAPE
READ LINK (1)
EXIT

TRAJECTORY LINK

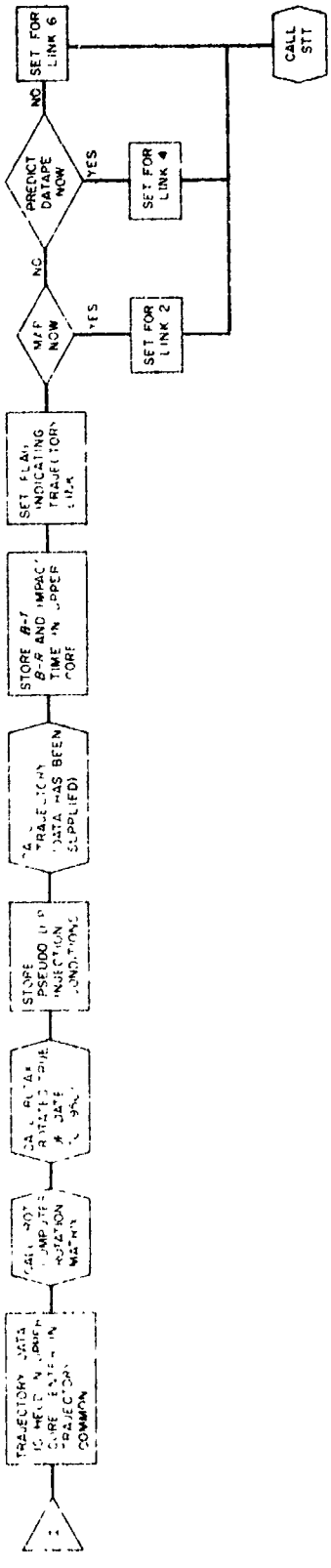

MAPPING LINK

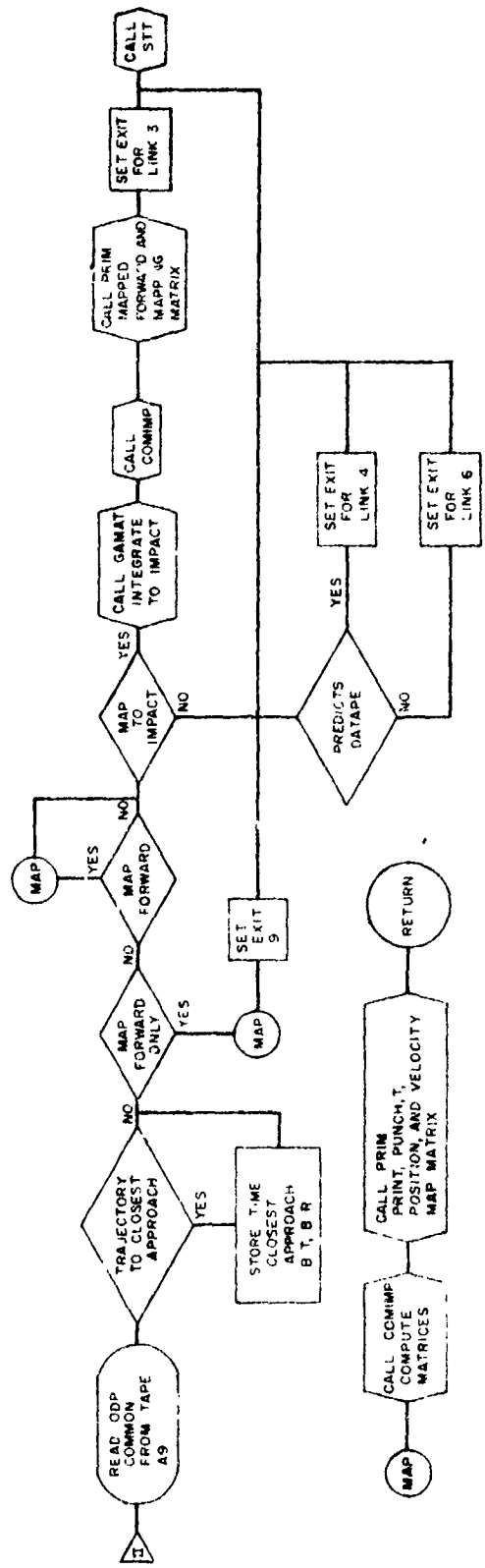

IMPACT CALCULATIONS LINK

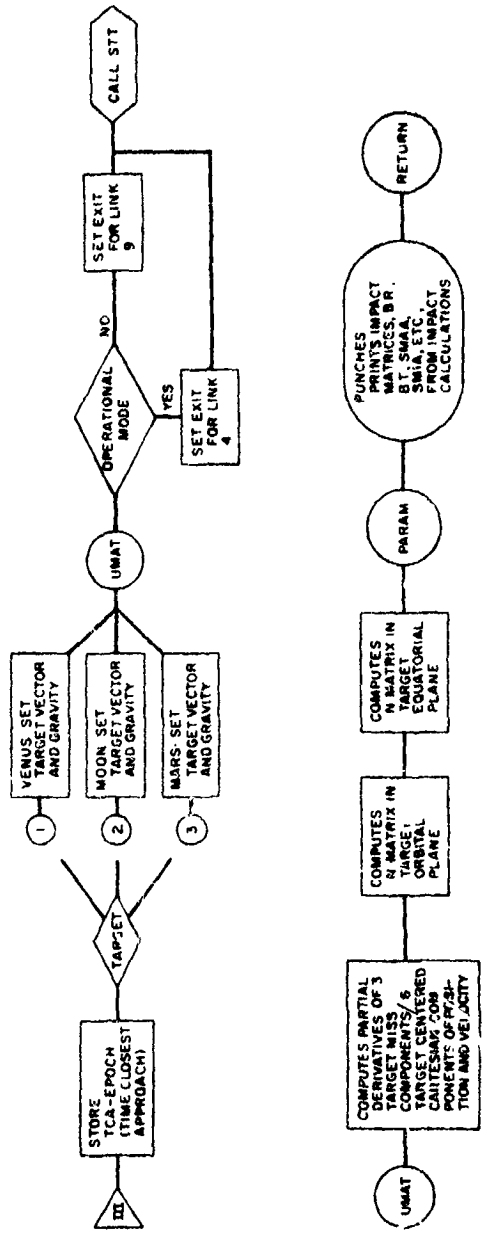

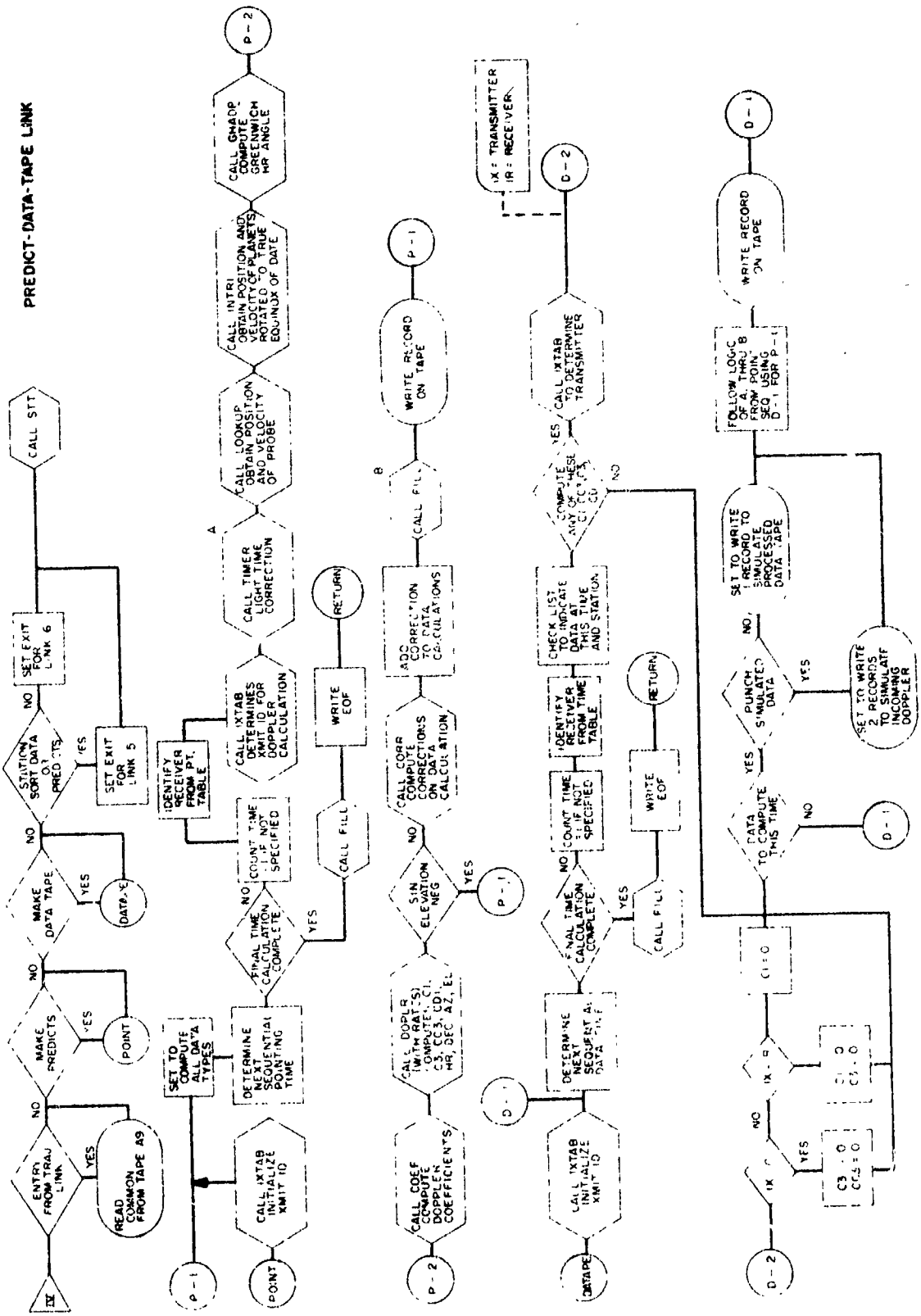
PREDICT-DATA-TAPE LINK
IV
ENTRY FROM TRAJ LINK
YES
NO
READ COMMON FROM TAPE A9
MAKE PREDICTS
POINT
MAKE DATA TAPE
DATAPE
STATION SORT DATA OR PREDICTS
SET EXIT FOR LINK 5
SET EXIT FOR LINK 6
CALL STT
P-1
POINT
CALL IXTAB INITIALIZE XMIT ID
SET TO COMPUTE ALL DATA TYPES
DETERMINE NEXT SEQUENTIAL POINTING TIME
FINAL TIME CALCULATION COMPLETE
COUNT TIME IF NOT SPECIFIED
IDENTIFY RECEIVER FROM PT. TABLE
CALL IXTAB DETERMINES XMIT ID FOR DOPPLER CALCULATION
CALL TIMER LIGHT TIME CORRECTION
A
CALL LOOKUP OBTAIN POSITION AND VELOCITY OF PROBE
CALL INTRI OBTAIN POSITION AND VELOCITY OF PLANETS ROTATED TO TRUE EQUINOX OF DATE
CALL GHADP COMPUTE GREENWICH HR ANGLE
P-2
CALL FILL
WRITE EOF
RETURN
P-2
CALL COEF COMPUTE DOPPLER COEFFICIENTS
CALL DOPLR (WITH RATES) COMPUTE: C1, C3, CC3, CD1, HR, DEC, AZ, EL
SIN ELEVATION NEG
P-1
CALL CORR COMPUTE CORRECTIONS ON DATA CALCULATIONS
ADD CORRECTION TO DATA CALCULATIONS
CALL FILL
B
WRITE RECORD ON TAPE
P-1
DATAPE
CALL IXTAB INITIALIZE XMIT ID
DETERMINE NEXT SEQUENTIAL DATA TIME
FINAL TIME CALCULATION COMPLETE
COUNT TIME IF NOT SPECIFIED
IDENTIFY RECEIVER FROM TIME TABLE
CHECK LIST TO INDICATE DATA AT THIS TIME AND STATION
COMPUTE ANY OF THESE C1, CC3, CD
CALL IXTAB TO DETERMINE TRANSMITTER
IX = TRANSMITTER
IR = RECEIVER
D-2
D-1
CALL FILL
WRITE EOF
RETURN
D-2
IX
C3 = 0
CC3 = 0
C1 = 0
C3 = 0
DATA TO COMPUTE THIS TIME
PUNCH SIMULATED DATA
SET TO WRITE 2 RECORDS TO SIMULATE INCOMING DOPPLER
SET TO WRITE 1 RECORD TO SIMULATE PROCESSED DATA TAPE
FOLLOW LOGIC OF A THRU B FROM POINT SEQ USING D-1 FOR P-1
WRITE RECORD ON TAPE
D-1

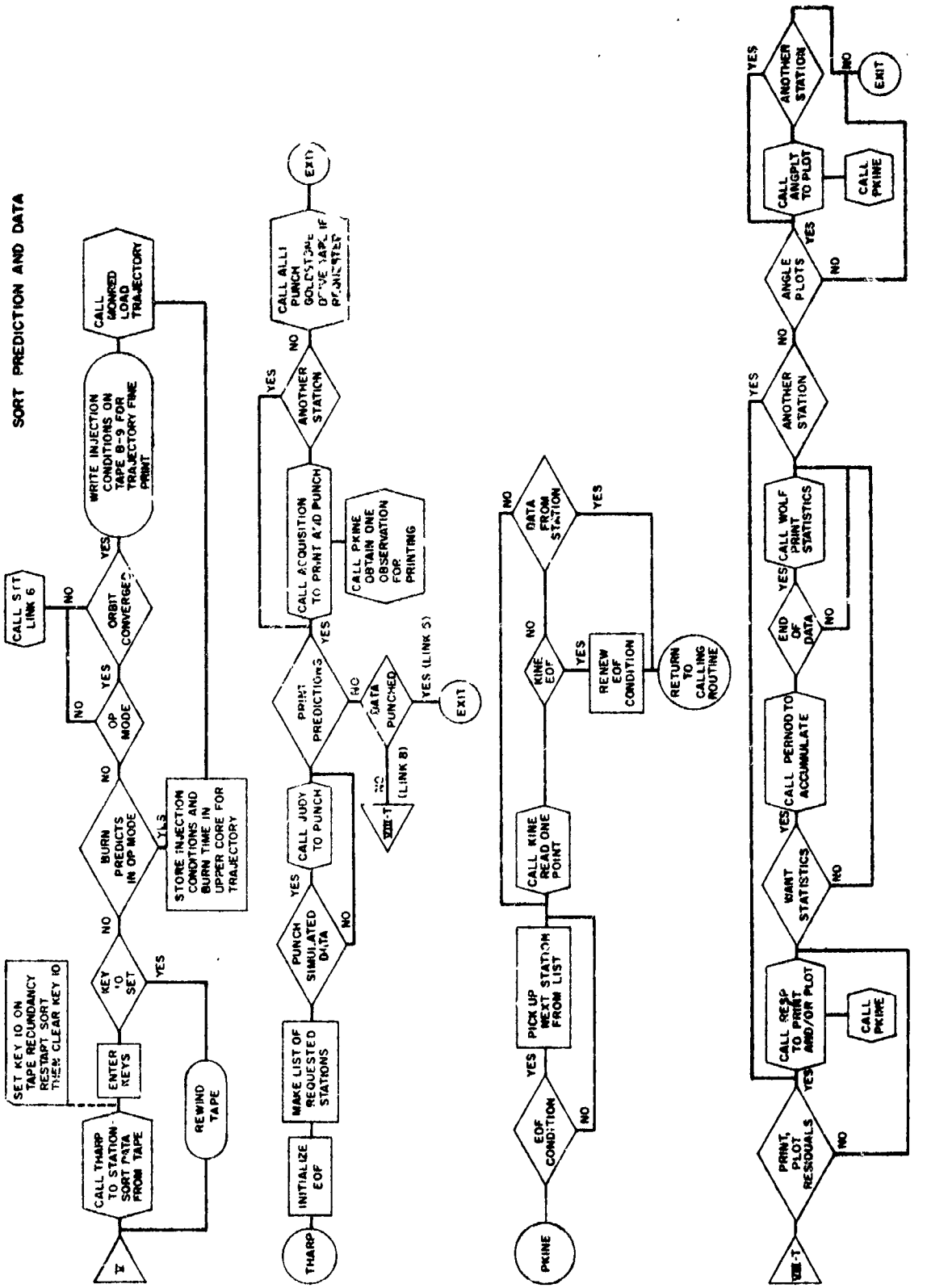
SORT PREDICTION AND DATA
CALL SET LINK 6
SET KEY 10 ON TAPE REDUNDANCY RESTART SORT THEN CLEAR KEY 10
ENTER KEYS
CALL THARP TO STATION SORT DATA FROM TAPE
KEY 10 SET
BURN PREDICTS IN OP MODE
OP MODE
ORBIT CONVERGED
WRITE INJECTION CONDITIONS ON TAPE 8-9 FOR TRAJECTORY FINE PRINT
CALL MONRED LOAD TRAJECTORY
STORE INJECTION CONDITIONS AND BURN TIME IN UPPER CORE FOR TRAJECTORY
REWIND TAPE
YES
NO
THARP
INITIALIZE EOF
MAKE LIST OF REQUESTED STATIONS
PUNCH SIMULATED DATA
CALL JUDY TO PUNCH
PRINT PREDICTIONS
CALL ACQUISITION TO PRINT AND PUNCH
CALL PKINE OBTAIN ONE OBSERVATION FOR PRINTING
ANOTHER STATION
CALL ALL PUNCH GOLDSTONE DRIVE TAPE IF PRINTED
EXIT
DATA PUNCHED
YES (LINK 5)
(LINK 8)
PKINE
EOF CONDITION
PICK UP NEXT STATION FROM LIST
CALL KINE READ ONE POINT
KINE EOF
RENEW EOF CONDITION
RETURN TO CALLING ROUTINE
DATA FROM STATION
PRINT, PLOT RESIDUALS
CALL RESP TO PRINT AND/OR PLOT
WANT STATISTICS
CALL PERNOD TO ACCUMULATE
END OF DATA
CALL WOLF PRINT STATISTICS
ANOTHER STATION
ANGLE PLOTS
CALL ANGPLT TO PLOT

DATA-FITTING LINK

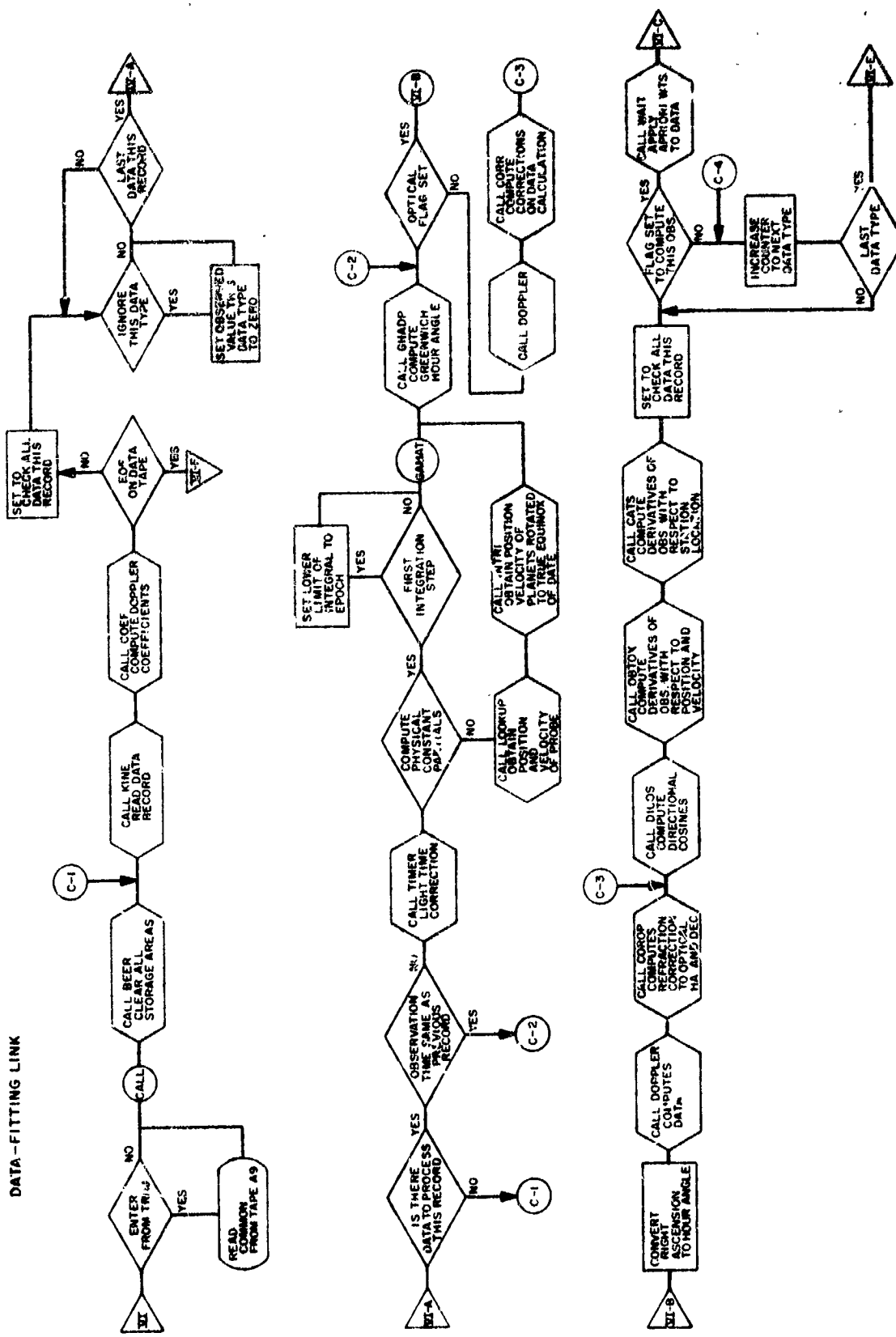

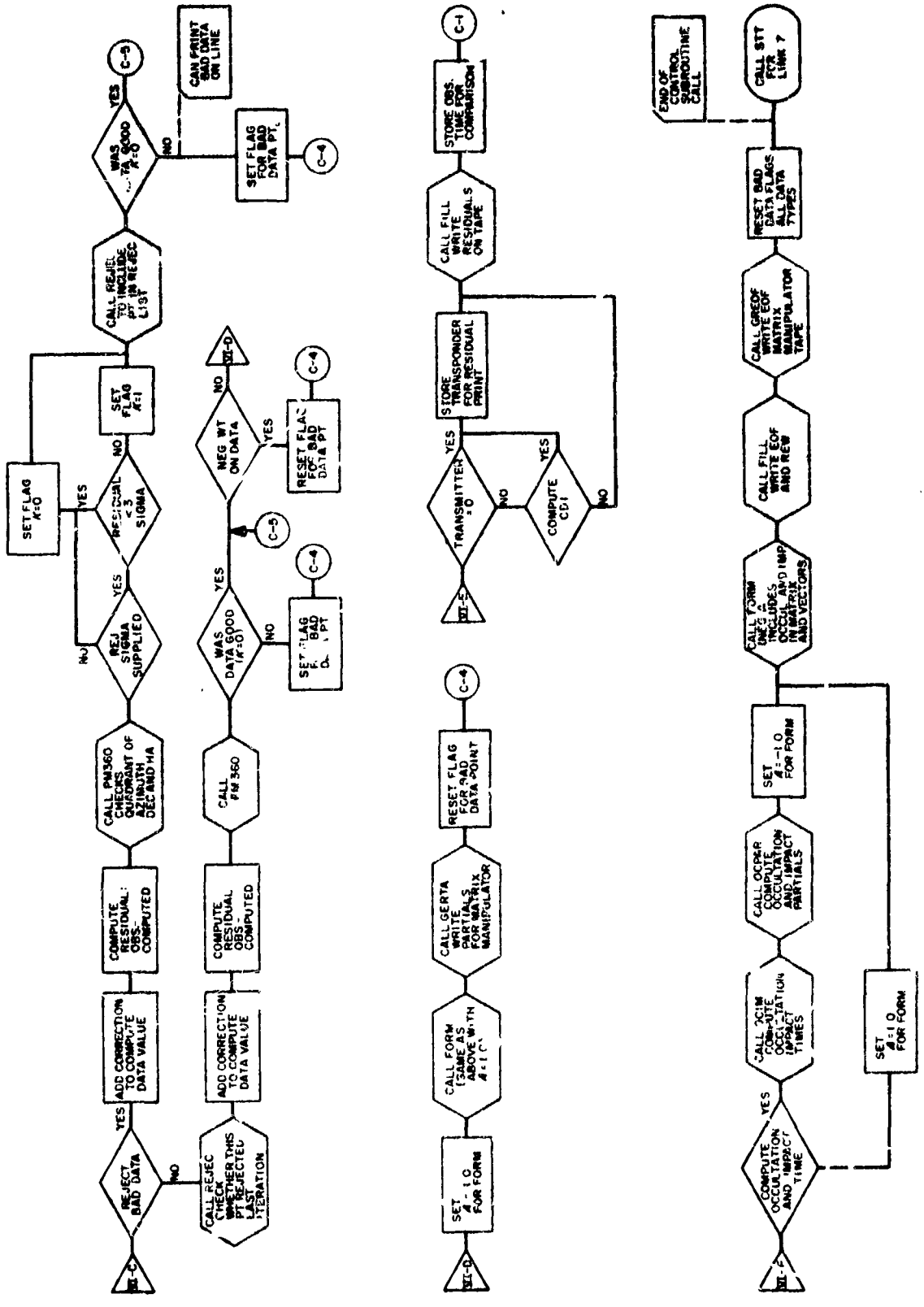
REJECT BAD DATA
YES
NO
ADD CORRECTION TO COMPUTE DATA VALUE
COMPUTE RESIDUAL: OBS.-COMPUTED
CALL PM360 CHECKS QUADRANT OF AZIMUTH DEC AND HA
REJ SIGMA SUPPLIED
YES
NO
RESIDUAL < 3 SIGMA
YES
NO
SET FLAG K=0
SET FLAG K=1
CALL REJEC TO INCLUDE PT IN REJEC LIST
WAS DATA GOOD K=0
YES
NO
C-5
C-4
CAN PRINT BAD DATA ON LINE
SET FLAG FOR BAD DATA PT
CALL REJEC CHECK WHETHER THIS PT REJECTED LAST ITERATION
ADD CORRECTION TO COMPUTE DATA VALUE
COMPUTE RESIDUAL OBS.-COMPUTED
CALL PM 360
WAS DATA GOOD (K=0)
YES
NO
C-5
C-4
SET FLAG FOR BAD DATA PT
NEG WT ON DATA
YES
NO
VI-D
C-4
RESET FLAG FOR BAD DATA PT
SET 4 = 1.0 FOR FORM
CALL FORM (SAME AS ABOVE WITH 4 = 1.0)
CALL GERTA WRITE PARTIALS FOR MATRIX MANIPULATOR
RESET FLAG FOR BAD DATA POINT
C-4
VI-D
TRANSMITTER = 0
YES
NO
COMPUTE CDI
YES
NO
STORE TRANSPONDER FOR RESIDUAL PRINT
CALL FILL WRITE RESIDUALS ON TAPE
STORE OBS. TIME FOR COMPARISON
C-1
VI-E
COMPUTE OCCULTATION AND IMPACT TIME
YES
CALL OCIM COMPUTE OCCULTATION IMPACT TIMES
CALL OCPAR COMPUTE OCCULTATION AND IMPACT PARTIALS
SET 4 = -1.0 FOR FORM
SET 4 = 1.0 FOR FORM
CALL FORM UNEQ 4 INCLUDES OCCUL AND IMP IN MATRIX AND VECTORS
CALL FILL WRITE EOF AND REW
CALL GREOF WRITE EOF MATRIX MANIPULATOR TAPE
RESET BAD DATA FLAGS ALL DATA TYPES
CALL STT FOR LINK 7
END OF CONTROL SUBROUTINE CALL

PRINT LINK RESIDUALS-STATISTICS LINK

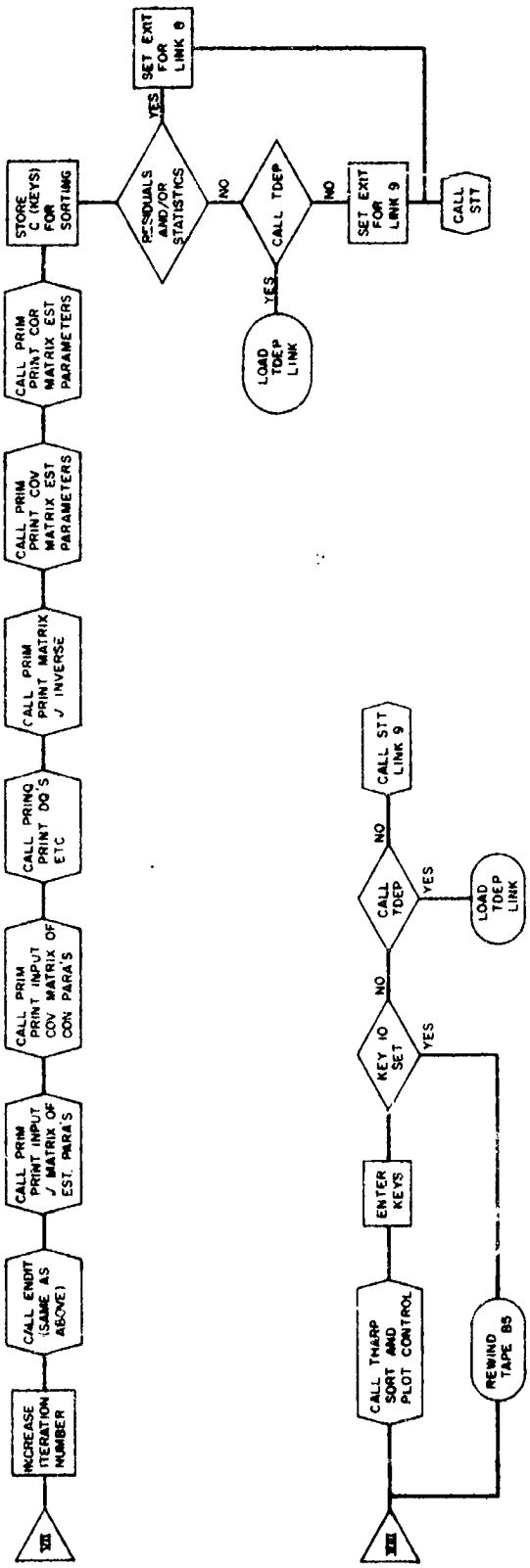

APPENDIX A. ODP Input

A. Card Formats

External input to the ODP consists of the input card deck, a data tape, and the planetary ephemeris tape. The cards specify all variables and options which are not a function of each observation. The deck is input at the beginning of the program, with optional supplementary inputs at the end of each iteration. It consists of a number of control cards, between which are the cards containing the variables and options. Each deck is terminated by an *end data* card.

Card input is processed by the subroutine ODINP, which was written to provide symbolic and double precision capabilities with a minimum of format restrictions. The following interpretations of input cards are made by ODINP:

1. The characters for the comma, equals sign, and blank have the same meaning, namely, to separate symbols from symbols, symbols from data, and data from data. Thus the user may improve the readability of his deck by using equals signs to separate symbols from associated data and blanks or commas to punctuate strings of symbols and data:
   DIAG = 100., 100., 100., .5, .5, .5

2. If an input number contains a decimal point and/or an E (denoting the power of ten to which the number is to be raised), it will be converted to 7094 floating point binary.

3. If an input number contains neither a decimal point or an E, it will be interpreted as an integer and will be converted directly to binary.

4. If an input number contains neither a decimal point or an E and is followed by 000000000000/8, it will be interpreted as an octal quantity and will be converted directly to binary. As many as twelve octal digits may be included.

5. If an input quantity is enclosed in parentheses it will be interpreted as an alphanumeric quantity and will be converted to BCD (binary-coded decimal).

6. If a card contains an octal integer ending in column 72 preceded by a left parenthesis, it will be interpreted as a control card which in part specifies the conversion and storage of the following data. Other punching on this type of card is ignored.

7. If a card contains a dollar sign punch (not in a BCD message), all punching to the right of the sign will be ignored.

8. All punching in columns 73 through 80 is ignored.

9. If an octal integer is followed by the slash sign it will be interpreted as the 7094 core storage location for the following datum. Thus, if the octal location corresponding to symbol X is 34567, all of the following data will be converted to the same binary quantity and stored in the same location.

X = 1.0

X = .1E1

34567′ = 1.

X = 20140000000000000000000 ′8

34567′ = 100 E-2

A description of the control and data cards acceptable to the ODP follows.

01 Epoch

This card is followed by two words describing the epoch associated with the trajectory. The format of the words is that used by the Space Trajectories Program, i.e., YYMM0DDHH, LLSSNNN. This is interpreted as Greenwich time where YY is the last two digits of the year, MM is the month, DD is the day, HH is the hour, LL is the minutes, SS is the seconds, and NNN is the milliseconds. All Greenwich times are entered in this format.

02 Probe position and velocity at epoch

This card is followed by the cartesian position and velocity components of the probe at the epoch. The coordinate system is referenced to the equinox and equator of date. The data is entered in double precision so more than eight digits may meaningfully be entered for each coordinate.

Symbols allowed

X, Y, Z, DX, DY, DZ

Restrictions

If this control card is used all 6 coordinates must appear after the control card.

03 Other parameter values

Data following this card describes the nominal values of the parameters (other than position and velocity) that the program is able to solve for. This control card is also used to select options and input constants.

Symbols allowed

KE, RE, G, KM, MV, MM, MJ, J, H, D, AU, C, RI (I), LA (I), LO (I)

NSDISP (I)	North-South displacement, deg
EWDISP (I)	East-West displacement, deg
INDEX (I)	Index of refraction coefficient (nominally 340.0)
DRIFT	Transponder drift, cps/sec
STEP	Initial trajectory step size, sec
BTTPRE	Previous B.TT
BRTPRE	Previous B.RT
BTTAIM	Previous B.TT aim
BRTAIM	Previous B.RT aim
TFREQ	Transponder freq less 960.0E6, cps
XFREQ	Transmitter freq less 29.66E6, cps
ENERGY	Powered flight energy
DTBURN	Powered flight duration
MOTOR	Motor count
SOLAR PRESSURE OFF	(Nominally on for planets)
LIGHT TIME OFF	(Nominally on)
REFRACTION AND VERTICAL OFF	(Nominally on)
MMP OUTPUT	
PHI VECTOR OUTPUT	

To select the target input one of the following:

TARGET = (MARS)

TARGET = (MOON)

TARGET = (VENUS)

Nominal target is (MOON).

To change the area, mass, or gamma B of the spacecraft, input the target subset of the following symbols followed by the changed parameter(s):

ARMARS	Nominal 11.12
MSMARS	Nominal 259.00
GBMARS	Nominal .096
ARMOON	Nominal 2.789
MSMOON	Nominal 340.20
GBMOON	Nominal .000
ARVEN	Nominal 3.83
MSVEN	Nominal 198.22
GBVEN	Nominal .383

04 Estimate these parameters

05 Consider these parameters

These cards are followed by lists of parameter names which tell the ODP to estimate (consider) the corresponding parameter. No numeric data is required.

Symbols allowed

X, Y, Z, DX, DY, DZ, KE, RE, G, KM, MV, MM, MJ, J, H, D, AU, C, RI(I), LA(I), LO(I)
(I is the station number.)

Restrictions

No more than 20 symbols may follow either card.

06 Rejection sigmas

The above card is followed by data indicating which of the observables are to be checked for possible rejection of bad points. If a symbol is accompanied by a numerical value the observation will be rejected if the absolute value of the residual exceeds the input value.

Symbols allowed

R(I), DR(I), EL(I), AZ(I), DEC(I), HA(I), C1(I), CC3(I), C3(I), D1(I), D3(I)

07 Inverse covariance matrix of estimated parameters

10 Covariance matrix of estimated parameters

11 Covariance matrix of considered parameters

These cards are followed by the indicated matrices. There are three options available for the format of the input cards.

1. If the input matrix consists only of diagonal elements the symbol DIAG may be followed by the diagonal elements.

2. Each row of the matrix may be entered separately if it is preceded by its corresponding symbol. The symbols for the rows are R01, R02, R03, ..., R19, R20.

3. The matrix may be entered with no symbols. In this case the operator must keep in mind that the matrices are stored in a Fortran type array which is currently compiled as a 20 × 20 matrix. This means that if the input matrix is of dimension N each row of the matrix must be followed by 20-N zeros.

Symbols allowed

DIAG, R01, R02, ..., R20

Restrictions

1. If a covariance matrix for the estimated parameters and its inverse are both present in the input data the last matrix entered will be used.

2. The dimension of the matrices must agree with the number of parameters following the estimate (consider) control card and in addition the parameters in the matrices must have the ordering tabulated above.

13 Delete these data types

This card is followed by the names of the data types the operator wants to delete from the least-squares fit. The ODP will behave as though the data tape did not contain these data types. No numeric data is required.

Symbols allowed

R(I), DR(I), EL(I), AZ(I), DEC(I), HA(I), C1(I), CC3(I), C3(I), D1(I), D3(I)

14 Statistics, plot, and/or print residuals for these data types

Designation of at least one data type for each station is necessary for the calculation of statistics.

This card is followed by the names of the data types whose residuals are to be printed or plotted. If a numeric field appears it will be interpreted as the scale factor to be used by the plotting routine. If no numeric field appears nominal values tabulated in the appendix will be used. The plotting routine nominally plots one hour of data per frame. The time scale on the plots may be changed by reading the floating-point number N into location NHR, where N is the number of hours per frame.

At present the routine tries to put 3 plots (vertically) per frame. If less than 3 data types from a station are requested the frame will be divided into 1 or 2 plots according to the number requested. If more than 3 data types from one station are requested the first plots will be divided into 3 subfields and the remaining plots will be divided into N (mod 3) subfields, where N is the number requested.

Symbols allowed

R(I), DR(I), EL(I), AZ(I), DEC(I), HA(I), C1(I), CC3(I), C3(I), D1(I), D3(I), NHR

Restrictions

A maximum of 8 data types per station may be requested.

15 Nominal values corresponding to covariance matrix

If a covariance matrix for the estimated parameters or its inverse is entered the values of the estimated parameters associated with matrix may also be entered. These values follow this control card and must be in the same order as the parameters in the matrix.

Note, if nominal values for the parameters are not entered the program will set the nominal values to the initial estimate of the parameters.

Symbols allowed

None

16 Weights by data type and station

Normally the ODP computes the weight for each data type from information the TDEP puts on the tracking data file. The operator can override this feature by following the above card with weights (sigma rather than sigma squared) for any or all of the data type. Weights must be specified in this manner when fitting an ODP-simulated data tape.

Symbols allowed

R(I), DR(I), EL(I), AZ(I), DEC(I), HA(I), C1(I), CC3(I), C3(I), D1(I), D3(I)

17 Pointing times, sample rate, count times

As the name suggests, data following this control card defines the amount of output obtained when the program is preparing a data tape or computing pointing predictions. A symbolic name is associated with each of the 15 possible tracking stations, and each name may be followed by one, two, or three groups of data. The format of each group is as follows: first time, last time, sample rate, count time. Pointing predictions (or a data tape) will be generated for the indicated station if the probe is above station's horizon anytime between the first time and the last time. The interval between predictions is defined by the sample rate and any requested doppler calculations will be based on the indicated count time. The two times are Greenwich time and are composed of two words each, as defined elsewhere. The sample rate and the count time are given as floating point seconds. As an example, JETMTS = 620702103, 0, 620702104, 0, 10., 5., 620702107, 0, 620702109, 0, 30., 30. instructs the program to generate pointing predictions for the MTS every 10 sec between 030000Z and 040000Z on July 21, 1962 with a doppler averaging time of 5 sec. Pointing predictions will also be generated for 070000Z to 090000Z on the same day but with a 30-sec sample rate and 30-sec doppler averaging time.

Symbols allowed

JETMTS, JETGL2, JETGL3, OOMJET, JOBJET, ANTGUA, ASCENS, PUERTO, MILLST, JODREL, T3CAPE, BAHAMA, SANSAL, HAWAII, TRINID

21 Data tape sigma

If a data tape is being prepared the data types following this card will be entered on the ODP data tape. If a numeric field appears with a symbol the program will put a normally distributed random number with mean zero on the calculated value of the data type. The one-sigma value of the distribution is set to the value following the symbolic name of the data type. If no numeric field follows a symbol the one-sigma value of the distribution is set to zero.

Symbols allowed

R(I), DR(I), EL(I), AZ(I), DEC(I), HA(I), C1(I), CC3(I), C3(I), D1(I), D3(I)

22 Data tape bias

Same as the above except that the numeric field indicates the constant. The ODP will add to the calculated value of each data type.

23 Page heading

Up to 11 BCD words may follow this control card. The comment must be initiated with a left parenthesis and closed with a right parenthesis. The comment will be printed above various output groups.

24 Map covariance matrix to

This card is followed by up to 12 monotonically increasing Greenwich times. The covariance matrix from the previous iteration will be mapped forward to these times.

Symbols allowed

None

26 Transmitter ID table

The data following this control card defines the transmitting station as a function of time. This data is required only when generating data tapes or pointing predictions since the TDEP identifies the transmitter for each time point appearing on the ODP data tape. The format of the

transmitter table is, X(1), TIME(1), X(2), TIME(2), ⋯, X(1), TIME(1), each X is made up of 2 parts, the transmitter number (IX) and the transmitter frequency (FREQ), for example station 3 transmitting with a frequency of 8383.5 would be 3838350. Each time is a Greenwich time in the standard two word format. The interpretation of the table is as follows, station IX(I) is transmitting with a FREQ(I) until TIME (I), then station IX(I + 1) is transmitting with a FREQ(I + 1) until TIME(I + 1) etc. IX(I) = 0 is interpreted as the transponder and TIME(I) = 0 is interpreted as infinity. When generating a data tape only one type of doppler will be allowed per time point. If all three doppler types are requested for a receiving station (see data tape sigma control cards), the following rules determine the doppler type that will appear.

1. If elevation at station IX is negative set IX = 0
2. If IX = 0 omit CC3 and C3
3. If IX ≠ IR ≠ 0 omit C1 and CC3 where IR is the receiver
4. If IX = IR omit C1 and C3

When punching pointing predictions the above rules apply with the exception that C1 is never omitted.

Symbols allowed

None

Restrictions

A maximum of 134 IX-TIME pairs is allowed

27 Offline control

This option allows the user to set up and submit cases which do not require a special operator. This is done by simulating the function of the console keys. As an example, a data card reading KEY(2), KEY(5) would cause keys 2 and 5 to be set. This control card must be present each iteration to set the keys for that iteration. The cards for each iteration must be followed by an end data card. A data card reading 'terminate job' must be included at the end of the deck to prevent indefinite iterating.

SYMBOLS ALLOWED	OPTION	NEED CONTROL CARDS
KEY(2)	Simulate TDEP data tape	1,2,17,21
KEY(4)	Map forward to input time	1,2,24
KEY(5)	Map to encounter	1,2
KEY(6)	Reject bad points	1,2,6
KEY(9)	Punch data in TDEP format	1,2,17,21,KEY(2)
KEY(12)	Punch pointing predicts	1,2,17,KEY(13)
KEY(13)	Pointing predictions	1,2,17
KEY(14)	Statistics	1,2,14
KEY(15)	Angle plots	1,2
KEY(16)	Residuals	1,2,14
KEY(17)	Time plots	1,2,14
TERMINATE JOB		

30 Burn start time

This time, in the usual Greenwich format, denotes the beginning of the powered flight.

31 Spherical injection conditions

In place of cartesian injection conditions, the user may input spherical conditions under this control card. The spherical conditions are transformed to cartesian conditions at input time.

Symbols allowed

RAD, LAT, LONG, VE, ELE, AZE

32 Occultation times

This data type is input by card, rather than through the TDEP. Two occultation times appear on each card. The format is OCCA, T1, T2, weight, rejection sigma where T1 and T2 are Greenwich times in the usual format.

Restrictions

Only stations 1 through 5 permitted. If only one time is to be used then T2 must be 0.0.

Symbols allowed

OCC1, OCC2, OCC3, OCC4, OCC5

33 Impact times

Same as occultation time, except that only one time per station is input. The format is IMPX = T, weight, rejection sigma.

Restrictions

Only stations 1 through 5 permitted

Symbols allowed

IMP1, IMP2, IMP3, IMP4, IMP5

00 End data

This card must terminate each set of control data read by the ODP.

B. Tape Formats

The data tape may be prepared by either the TDEP or a simulation run on the ODP. It consists of a number of logical records, each of which contains the data observed by a station at one time. The tape read and write routines use buffering techniques; therefore a physical record on this tape may contain several logical records, normally between 10 and 20. The logical record format is as follows:

Word Number	Description
1 – 2	Time, double precision seconds past 1950.0
3	Transmitter frequency less 29.66 E6, $q \neq 0$ Transponder frequency less 960.0 E6, $q = 0$
4	Pass identification in BCD
5	Codeword (see below)
6	First observation
7	Bits 1-18 weight code, bits 19-35 sample rate, sec.
8	Second observation, if taken
9	Second weight-sample rate

Word Number	Description
.	
.	
.	
$2n + 4$	nth observation at this time
$2n + 5$	nth weight code-word

The logical record has a variable length of $2n + 5$ words, where n is the number of observations at this time. The weight code portion of words 7, 9, 11, $\cdots$, $2n + 5$ is not furnished by ODP simulations.

The codeword is constructed as follows:

Bit Number	Description
S	Not used
1	1 if ρ_i in this record
2	$\dot{\rho}_i$
3	γ_i
4	σ_i
5	δ_i
6	α_i or α_{ri}
7	f_{1i}
8	f_{c3i}
9	f_{3i}
10	f_{d1i}
11 – 16	Not used
17	1 if optical α_{ri} and δ_i in this record
18 – 21	Transmitter index, q
22 – 25	Receiver index, i
26 – 35	Doppler averaging time, τ

The planetary ephemeris tape is described in Ref. 2 in the section on subroutine INTR, which is used for interpolation of the ephemerides.

The probe ephemeris tape as described previously consists of a series of 392-word physical records. Each physical record contains eight 49-word records in the following format.

Word Number	Description
1 – 2	Time, double precision seconds past 1950.0
3 – 8	x, y, z, $\dot{x}$, $\dot{y}$, $\dot{z}$ of probe, true equator and equinox
9 – 44	U matrix, $\partial r/\partial r_0$
45	Nutation in longitude, $\Delta\lambda$
46	Nutation in obliquity, $\Delta\epsilon$
47 – 49	$\ddot{x}$, $\ddot{y}$, $\ddot{z}$ of probe

APPENDIX B. ODP Output

Output to the user may be on printed pages, punched cards, or plots. The following output items are automatically printed during the iteration:

1. List of card input.
2. A priori covariance matrix.($\tilde{\Gamma}$).
3. Inverse of a priori covariance matrix.
4. Trajectory information.
5. J matrix.
6. J matrix correlations.
7. Solution vector and statistics.
8. Inverse of J matrix.
9. Covariance matrix (Γ).
10. Covariance matrix correlations.

The following output items are obtained on option:

Printed page

1. Residuals, computed observables, weights and frequencies sorted by time and station.
2. Summary of residual statistics sorted by station.
3. Rejected data points.
4. Pointing ephemeris sorted by station and list of Goldstone drive tape.
5. Mapping matrix.
6. Mapped covariance matrix, from epoch to specified times, or from epoch to target encounter.
7. Position and velocity of probe at mapping times.

8. Encounter parameters.

9. Encounter statistics and matrices.

10. Supplementary printout at data times – time, probe and planetary vectors, data partials.

Punched cards

1. Mapped covariance matrix

2. Pointing ephemeris and Goldstone drive tape.

3. Encounter information for Midcourse Program.

4. Encounter information for Matrix Manipulation Program.

5. Simulated tracking data for Tracking Data Editing Program.

Plots

1. Residuals vs time, sorted by station and data type.

2. Angle residuals vs angles, sorted by station and angle type.

A binary tape for the Matrix Manipulation Program, containing data partials and mapping matrices, is generated on option.

All output to the user which is to be printed, punched, or plotted, is written on one 7094 tape. At the conclusion of the ODP run, the tape is processed by a special 1401 program. The printed pages and punched cards are obtained at this stage. Also obtained is a special low-density tape containing plotting information for the SC-4020 plotter.

The following symbols appear on the output listings. The corresponding symbols used in this report and the definitions are given:

Output symbol	Report symbol	Definition
X	x	position of probe, geocentric equatorial true of date, km
Y	y	
Z	z	
DX	$\dot{x}$	velocity of probe, geocentric equatorial true of date, km/sec
DY	$\dot{y}$	
DZ	$\dot{z}$	

Output symbol	Report symbol	Definition
KE	GM_e	gravitational constant of earth, km^3/sec^2
RE	R_e	equatorial radius of Earth, km
G	γB	solar pressure constant
KM	GM_m	gravitational constant of Moon, km^3/sec^2
MV	M_v	mass of Venus, solar masses
MM	M_r	mass of Mars, solar masses
MJ	M_j	mass of Jupiter, solar masses
J	J	second harmonic coefficient
H	H	third harmonic coefficient
D	D	fourth harmonic coefficient
AU	a_e	astronomical unit, km
C	c	speed of light, km/sec
RI(I)	R_i	radius of earth at station i, km
LA(I)	ϕ_i	geocentric latitude of station i, deg
LO(I)	λ_i	longitude of station i, deg
R	ρ	slant range, km
DR	$\dot{\rho}$	slant range rate, km/sec
EL	γ	elevation angle, deg
AZ	σ	azimuth angle, deg
DEC	δ	declination, deg
HA	α	hour angle, deg
C1	f_1	one-way integrated doppler frequency, cps
CC3	f_{c3}	coherent three-way integrated doppler frequency, cps
C3	f_3	three-way integrated doppler frequency, cps
D1	f_{d1}	differenced one-way integrated doppler frequency, cps
B	$\lvert \mathbf{B} \rvert$	vector from target center of mass perpendicular to probe asympote, km
B·RO	$\mathbf{B}\cdot\mathbf{R}_0$	dot products, target orbital plane, km
B·TO	$\mathbf{B}\cdot\mathbf{T}_0$	
B·RT	$\mathbf{B}\cdot\mathbf{R}_T$	dot products, target equatorial plane, km
B·TT	$\mathbf{B}\cdot\mathbf{T}_T$	
TL	t_L	linearized time of flight, hours (lunar missions) or days
TF	t_f	true time of flight, hours (lunar missions) or days
SMAA	a	semi-major axis of dispersion ellipse at target, km
SMIA	b	semi-minor axis, km
THETA	θ	inclination of dispersion ellipse to target orbital plane, deg
DEL T	σ_t	standard deviation of linearized time of flight, sec

Output symbol	Report symbol	Definition
DEL B	σ_B	standard deviation of **B** vector, km
DEL S	σ_S	standard deviation of asymptote unit vector, km
C3	c_3	vis viva energy, km^2/sec^2
TC	τ	doppler count time, sec
Q	q	transmitter index
FRQ	f_q	if $q \neq 0$, station frequency less 29.66×10^6 cps
	f_T	if $q = 0$, probe frequency less 960×10^6 cps

The following pages of this Appendix contain representative listings and plots.

```
PAGE HEADING                                                    (23
(ODP SAMPLE OUTPUT LISTING)
EPOCH                                                           (01
621001717,2346000
PROBE POSITION AND VELOCITY AT EPOCH                            (02
X=.41668173E4  Y=-.43299222E4 Z=-.26569326E4
DX=.66119558E1 DY=.80167139E1 DZ=-.34633899E1
OTHER PARAMETER VALUES                                          (03
RI(4)=6372.5297
LA(4)=-31.21014
LO(4)=136.88502
NSDISP(4)=-.1727
ESTIMATE THESE PARAMETERS                                       (04
X Y Z DX DY DZ KE KM RI(4) LA(4) LO(4)
COVARIANCE MATRIX OF ESTIMATED PARAMETERS                       (10
DIAG=100.,100.,100.,1.,1.,1.,10.,10.,.001,.001,.001
STATISTICS,PLOT AND/OR PRINT RESIDUALS FOR THESE PARAMETERS     (14
R(4) HA(4) DEC(4) CC3(4)
WEIGHTS BY DATA TYPE AND STATION                                (16
R(4)=1. DEC(4)=1. HA(4)=1. CC3(4)=1.
POINTING TIMES, SAMPLE RATE, COUNT TIME                         (17
OOMJET=621001717,3000000,621001721,5500000,300.,1.
TRANSMITTER ID TABLE                                            (26
4821500
DATA TAPE SIGMA                                                 (21
R(4)=.005 HA(4)=.01 DEC(4)=.01 CC3(4)=.02
DATA TAPE BIAS                                                  (22
R(4)=-.0005 HA(4)=.001 DEC(4)=-.001
MAP COVARIANCE MATRIX TO                                        (24
621001817,0
OFFLINE CONTROL                                                 (27
KEY(2) KEY(13) KEY(14) KEY(15) KEY(16) KEY(17)
END DATA                                                        (00
```

INPUT COVARIANCE MATRIX OF ESTIMATED PARAMETERS ITERATION NUMBER 0

	X	Y	Z	DX	DY	DZ	KE	KM	RI(04)
X	.10000000 03	.00000000 00	.00000000 00	.00000000 00	.00000000 00	.00000000 00	.00000000 00	.00000000 00	.00000000 00
Y	.00000000 00	.10000000 03	.00000000 00	.00000000 00	.00000000 00	.00000000 00	.00000000 00	.00000000 00	.00000000 00
Z	.00000000 00	.00000000 00	.10000000 03	.00000000 00	.00000000 00	.00000000 00	.00000000 00	.00000000 00	.00000000 00
DX	.00000000 00	.00000000 00	.00000000 00	.10000000 01	.00000000 00	.00000000 00	.00000000 00	.00000000 00	.00000000 00
DY	.00000000 00	.00000000 00	.00000000 00	.00000000 00	.10000000 01	.00000000 00	.00000000 00	.00000000 00	.00000000 00
DZ	.00000000 00	.00000000 00	.00000000 00	.00000000 00	.00000000 00	.10000000 01	.00000000 00	.00000000 00	.00000000 00
KE	.00000000 00	.00000000 00	.00000000 00	.00000000 00	.00000000 00	.00000000 00	.10000000 02	.00000000 00	.00000000 00
KM	.00000000 00	.00000000 00	.00000000 00	.00000000 00	.00000000 00	.00000000 00	.00000000 00	.10000000 02	.00000000 00
RI(04)	.00000000 00	.00000000 00	.00000000 00	.00000000 00	.00000000 00	.00000000 00	.00000000 00	.00000000 00	.99999998-03
LA(04)	.00000000 00	.00000000 00	.00000000 00	.00000000 00	.00000000 00	.00000000 00	.00000000 00	.00000000 00	.00000000 00
LO(04)	.00000000 00	.00000000 00	.00000000 00	.00000000 00	.00000000 00	.00000000 00	.00000000 00	.00000000 00	.00000000 00

	LA(04)	LO(04)
X	.00000000 00	.00000000 00
Y	.00000000 00	.00000000 00
Z	.00000000 00	.00000000 00
DX	.00000000 00	.00000000 00
DY	.00000000 00	.00000000 00
DZ	.00000000 00	.00000000 00
KE	.00000000 00	.00000000 00
KM	.00000000 00	.00000000 00
RI(04)	.00000000 00	.00000000 00
LA(04)	.99999998-03	.00000000 00
LO(04)	.00000000 00	.99999998-03

INPUT J MATRIX OF ESTIMATED PARAMETERS ITERATION NUMBER 0

	X	Y	Z	DX	DY	DZ	KE	KM	RI(04)
X	.99999998-02	.00000000 00	.00000000 00	.00000000 00	.00000000 00	.00000000 00	.00000000 00	.00000000 00	.00000000 00
Y	.00000000 00	.99999998-02	-.00000000 00	-.00000000 00	-.00000000 00	.00000000 00	-.00000000 00	-.00000000 00	-.00000000 00
Z	.00000000 00	-.00000000 00	.99999998-02	-.00000000 00	-.00000000 00	.00000000 00	-.00000000 00	-.00000000 00	-.00000000 00
DX	.00000000 00	-.00000000 00	-.00000000 00	.10000000 01	-.00000000 00	.00000000 00	-.00000000 00	-.00000000 00	-.00000000 00
DY	.00000000 00	-.00000000 00	-.00000000 00	-.00000000 00	.10000000 01	-.00000000 00	-.00000000 00	-.00000000 00	-.00000000 00
DZ	.00000000 00	-.00000000 00	-.00000000 00	-.00000000 00	-.00000000 00	.10000000 01	-.00000000 00	-.00000000 00	-.00000000 00
KE	.00000000 00	-.00000000 00	-.00000000 00	-.00000000 00	-.00000000 00	-.00000000 00	.99999999-01	-.00000000 00	-.00000000 00
KM	.00000000 00	-.00000000 00	-.00000000 00	-.00000000 00	-.00000000 00	-.00000000 00	-.00000000 00	.99999999-01	-.00000000 00
RI(04)	.00000000 00	-.00000000 00	-.00000000 00	-.00000000 00	-.00000000 00	-.00000000 00	-.00000000 00	-.00000000 00	.10000000 04
LA(04)	.00000000 00	-.00000000 00	-.00000000 00	-.00000000 00	-.00000000 00	-.00000000 00	-.00000000 00	-.00000000 00	-.00000000 00
LD(04)	.00000000 00	-.00000000 00	-.00000000 00	-.00000000 00	-.00000000 00	-.00000000 00	-.00000000 00	-.00000000 00	-.00000000 00

	LA(04)	LD(04)
X	.00000000 00	.00000000 00
Y	-.00000000 00	-.00000000 00
Z	-.00000000 00	-.00000000 00
DX	-.00000000 00	-.00000000 00
DY	-.00000000 00	-.00000000 00
DZ	-.00000000 00	-.00000000 00
KE	-.00000000 00	-.00000000 00
KM	-.00000000 00	-.00000000 00
RI(04)	-.00000000 00	-.00000000 00
LA(04)	.10000000 04	-.00000000 00
LD(04)	-.00000000 00	.10000000 04

CASE 1 SPACE TRAJECTORIES 1

EPHEMERIS TAPE 111 WITH SATURN. B-8 IS

GME	.39860320 06	J	.16234500-02	H	-.57499999-05	D	.78749999-05	RE	.63781650 04	REM	.63783254 04
G	.66709998-19	A	.88782497 29	B	.88800499 29	C	.88837498 29	OME	.41780741-02	AU	.14959930 09
GMN	.49027779 04	GMS	.13271544 12	GMV	.32476950 06	GMA	.42977799 05	GMC	.37918700 08	GMJ	.12671060 09

INJECTION CONDITIONS MOON JULIAN DATE 2437955.22483796 OCT. 17,1962 17 23 46.000

GEOCENTRIC XO .41668173 04 YO-.43299222 04 ZO-.26569326 04 DXO .66119558 01 DYO .80167139 01 DZO-.34633899 01
CARTESIAN GMC .00000000 00 SGC .00000000 00 TJ .62626000 05 GMA .28667206 03 GMO .25016000 02
EARTH IS THE CENTRAL BODY FOR INTEGRATION COWELL EQUATIONS OF MOTION

0 DAYS 0 HRS. 0 MIN. 0.000 SEC. JULIAN DATE 2437955.22483796 OCT. 17,1962 17 23 46.000

GEOCENTRIC EQUATORIAL COORDINATES

X	.4166[illegible]70 04	Y	-.43299220 04	Z	-.26569325 04	DX	.66119556 01	DY	.80167135 01	DZ	-.34633877 01
R	.65703788 04	DEC	-.23852307 02	RA	.31390027 03	V	.10953571 02	PTH	.16251359 01	AZ	.10946981 03
R	.65703788 04	LAT	-.23852307 02	LON	.27228211 02	VE	.10541614 02	PTE	.16886635 01	AZE	.11026433 03
XS	-.13631670 09	VS	-.55322907 08	ZS	-.23989678 08	DXS	.12524825 02	DYS	-.24894045 02	DZS	-.10793871 02
XM	.54334411 05	VM	.34831499 06	ZM	.12624281 06	DXM	-.10213763 01	DYM	.18375549 00	DZM	.14711733 00
RT	.54334411 05	VT	.34831499 06	ZT	.12624281 06	DXT	-.10213763 01	DYT	.18375549 00	DZT	.14711733 00
RS	.14905828 09	VS	.29884651 02	RM	.37445001 06	VM	.10481503 01	RT	.37445001 06	VT	.10481503 01
GED	-.23996594 02	ALT	.19570331 03	LOS	.27541776 03	RAS	.20208933 03	RAM	.81133758 02	LOM	.15446169 03
DUT	.35000000 02	DI	.37500000 01	DR	.31064546 00	SHA	.63258033 04	DES	-.92615556 01	DEM	.19702842 02
DAC	.00000000 00	CCL	.82502660 02	MCL	.18107482 03	TCL	.18107482 03				

GEOCENTRIC CONIC

EPOCH OF PERICENTER PASSAGE JULIAN DATE 2437955.22443990 OCT. 17,1962 17 23 11.608

SMA	.29667673 04	ECC	.97772123 00	B	.61854881 05	SLR	.12983807 05	APO	.54278842 06	RCA	.65650338 04
VH	.12346130 00	C3	-.13526796 01	C1	.71940163 05	TFP	.34391971 02	TF	-.95533250-02	PER	.26532428 05
TA	.32873162 01	MTA	.00000000 00	EA	.34899576 00	MA	.77773438-02	CJJ	-.17360229 01	TFX	.00000000 00

ALL VECTORS REFERENCED TO EARTH EQUATOR PLANE

X	.41668170 04	Y	-.43299220 04	Z	-.26569325 04	DX	.66119556 01	DY	.80167135 01	DZ	-.34633897 01
INC	.30625083 02	LAN	.85061547 02	APF	.22970182 03	MX	.58588483 00	MY	.25087284 00	MZ	-.30486348 00
WX	.50453143 00	WY	-.43594680-01	WZ	.86229204 00	PX	.59954220 00	PY	-.70097937 00	PZ	-.38623442 00
QX	.62128668 00	QY	.71184786 00	QZ	-.32752927 00	RX	-.25104475 00	RY	.29351927 00	RZ	-.92240062 00
BX	-.62128670 00	BY	-.71184789 00	BZ	.32752928 00	TX	-.75995109 00	TY	-.64998026 00	TZ	.00000000 00
UAP	-.22720396 02	RAP	.31054011 03								
BTQ	.57824082 05	BRQ	-.21963649 05	B	.61854881 05	THA	.33920143 03				

HELIOCENTRIC EQUATORIAL COORDINATES

X	.13632086 09	Y	.55318577 08	Z	.23987021 08	DX	-.59128698 01	DY	.32910758 02	DZ	.73304038 01
R	.14[illegible]005 09	LAT	.92604087 01	LON	.22087161 02	V	.34231798 02	PTH	.13496627 02	AZ	.79396532 02
XE	.13631670 09	VE	.55322907 08	ZE	.23989678 08	DXE	-.12524825 02	DYE	.24894045 02	DZE	.10793871 02
RT	.13637103 09	VT	.55671221 08	ZT	.24115920 08	DXT	-.13546202 02	DYT	.25077800 02	DZT	.10940888 02
LTE	.92615554 01	LOE	.22099334 02	LTT	.92981619 01	LOT	.22206929 02	HST	.14925790 09	VST	.30530327 02
EPS	.74315426 02	ESP	.27453512-18	SEP	.10568214 03	EPM	.48155124 02	EMP	.74889822 00	MEP	.13109591 03
MPS	.12142610 03	MSP	.12413322 00	SMP	.58451815 02	SEM	.12215462 03	EMS	.57723679 02	ESM	.12174582 09
EPT	.48155124 02	ETP	.74889822 00	TEP	.13109591 03	TPS	.12142610 03	TSP	.12413322 00	STP	.58451815 02
SET	.12215462 03	STE	.57723679 02	EST	.12174532 00	RPM	.37880122 06	RPT	.37880122 06	SPM	-.17854776 01
ECE	.27769734 03	ECT	.28789612 03	SIP	.12116121 03	CPI	.73566709 02	SIN	.73303825 02	DI	.13764630 00
REP	.65703788 04	VEP	.10953571 02	CPE	.83414233 02	CPS	.92296002 02	DZ	.72300556-01	DI	.38774431-03

0 DAYS 4 HRS. 35 MIN. 14.000 SEC. JULIAN DATE 2437955.41597222 OCT. 17,1962 21 59 03.000

CASE 1 SPACE TRAJECTORIES 2

GEOCENTRIC

X	-.11258533 05	Y	.69027893 05	Z	.10136745 05	DX	-.13380188 01	DY	.26940025 01	DZ	.92148562 00
R	.70670773 05	DEC	.82467327 01	RA	.99263444 02	V	.31459624 01	PTH	.71120235 02	AZ	.60602947 02
R	.70670772 05	LAT	.82467327 01	LON	.10359466 03	VE	.51828123 01	FTE	.35053590 02	AZE	.27676367 03
XS	-.13610911 09	YS	-.55733727 08	ZS	-.24167805 08	DXS	.12614908 02	DYS	-.24857828 02	DZS	-.10778128 02
XM	.37419115 05	YM	.35098397 06	ZM	.12853943 06	DXM	-.10268546 01	DYM	.13949459 00	DZM	.13100130 00
XT	.37419115 05	YT	.35098397 06	ZT	.12853943 06	DXT	-.10268546 01	DYT	.13949459 00	DZT	.13100130 00
RS	.14905040 09	VS	.29886712 02	RM	.37564920 06	VM	.10445336 01	RT	.37564920 06	VT	.10445336 01
GED	.83021516 01	ALT	.64293011 05	LOS	.20659925 03	RAS	.20226803 03	RAM	.83914566 02	LOM	.88245781 02
DUT	.35000000 02	DT	.2000000 03	DR	.29767386 01	SMA	.68552283 05	DES	-.93314334 01	DEM	.20309713 02
DAC	.00000000 00	CCL	.24065802 03	MCL	.22952418 03	TCL	.22952418 03				

EQUATORIAL COORDINATES

GEOCENTRIC CONIC

EPOCH OF PERICENTER PASSAGE JULIAN DATE 2437955.22444153 OCT. 17,1962 17 23 11.748

SMA	.28811468 06	ECC	.97720706 00	B	.61163405 05	SLR	.12984280 05	APO	.56966238 06	RCA	.65669803 04
VH	.12628791 00	C3	-.13834880 01	C1	.71941473 05	TFP	.16548252 05	IF	-.95143913-02	DEA	.25651118 03
TA	.14664813 03	MTA	.00000000 00	EA	.39437642 02	MA	.38707672 01	C3J	-.17575449 01	TFI	.45872222 01

ALL VECTORS REFERENCED TO EARTH EQUATOR PLANE

X	-.11258533 05	Y	.69027893 05	Z	.10136745 05	DX	-.13380188 01	DY	.26940025 01	DZ	.92148562 00
INC	.30432094 02	LAN	.84980012 02	APF	.22980202 03	NX	-.84854319 00	NY	-.20973569 00	NZ	.48578327 00
HX	.50457397 00	HY	-.44321844-01	HZ	.86223006 00	PX	.59958427 00	PY	-.70058345 00	PZ	-.38688219 00
GX	.62121154 00	GY	.71219271 00	GZ	-.32692143 00	RX	-.25156128 00	RY	.29393641 00	RZ	-.92212707 00
BX	-.62121159 00	BY	-.71219276 00	BZ	.32692145 00	TX	-.75974708 00	TY	-.65021871 00	TZ	.00000000 00
DAP	-.22760949 02	RAP	.31055809 03								
BTQ	.57190520 05	BRQ	-.21684244 05	B	.61163405 05	THA	.33923537 03				

HELIOCENTRIC

X	.13609785 09	Y	.55802755 08	Z	.24177941 08	DX	-.13952927 02	DY	.27551830 02	DZ	.11699613 02
R	.14906759 09	LAT	.93342961 01	LON	.22294581 02	V	.33025270 02	PTH	-.91508142 00	AZ	.68796131 02
XE	.13610911 09	YE	.55733727 08	ZE	.24167805 08	DXE	-.12614908 02	DYE	.24857828 02	DZE	.10778128 02
XT	.13614653 09	YT	.56084711 08	ZT	.24296344 08	DXT	-.13641763 02	DYT	.24997322 02	DZT	.10909129 02
LTE	.93314334 01	LDE	.22268037 02	LET	.93696746 01	LDT	.22388907 02	RST	.14923701 09	VST	.30495457 02
EPS	.75909232 02	ESP	.25217635-01	SEP	.10406442 03	EPM	.15680585 03	EMP	.42491939 01	MEP	.18944948 02
MPS	.1.312008 03	MSP	.10014048 00	SMP	.56780350 02	SEM	.11972378 03	EMS	.60150972 02	ESM	.12530987 00
EPT	.15680585 03	ETP	.42491939 01	TEP	.18944948 02	TPS	.12312008 03	TSP	.10014048 00	STP	.56780350 02
SET	.11972378 03	STE	.60150972 02	EST	.12530987 00	RPM	.30965777 06	RPT	.30965777 06	SPM	.70731271 02
GCE	.11934197 03	GCT	.28475720 03	SIP	.12279849 03	CPT	.76372398 02	SIN	.76050815 02	D1	.16838238 00
REP	.70670773 05	VEP	.31459624 01	CPE	.11900460 03	CPS	.92355073 03	D2	.92681837-01	D3	.61690878-03

EQUATORIAL COORDINATES

CONTENTS OF TAPE B7 WILL BE DESTROYED • PRESS START TO CONTINUE

STATION NUMBER 4 62/10/17 PAGE 1

TIME	R	DR	EL	AZ	DEC	HA	C1	CC3	C3	D1	D3
174000	.57619011 04	.87630552 00	19.520706	270.166092	350.114902	73.081728	152718.828	105612.531	106899.551	.000	.000
174500	.64200389 04	.32975167 01	37.937675	283.055105	350.921608	50.815342	160229.623	121119.616	121922.039	.000	.000
175000	.76198391 04	.45387125 01	48.991819	298.858162	352.957523	35.384111	164079.850	129068.979	129622.984	.000	.000
175500	.90729253 04	.50611299 01	54.483347	312.818283	355.021580	25.324620	165700.377	132414.824	132864.273	.000	.000
180000	.10622741 05	.52397325 01	56.786500	324.304104	356.794884	18.669922	166254.379	133558.688	133972.391	.000	.000
180500	.12200407 05	.52611146 01	57.480317	333.001266	358.270683	14.132577	166320.684	133695.627	134105.049	.000	.000
181000	.13772310 05	.52106404 01	57.417297	339.326897	359.503643	10.960196	166164.092	133372.357	133791.883	.000	.000
181500	.15323582 05	.51279728 01	57.010037	343.851288	.547296	8.708892	165707.637	132842.906	133278.977	.000	.000
182000	.16847760 05	.50321828 01	56.487125	347.056828	1.443521	7.106234	165610.479	132229.412	132684.654	.000	.000
182500	.18342486 05	.49326995 01	55.916458	349.298840	2.223540	5.977601	165301.867	131592.262	132067.416	.000	.000
183000	.19807442 05	.48342375 01	55.350571	350.828243	2.910511	5.206373	164996.422	130951.656	131456.516	.000	.000
183500	.21243322 05	.47391167 01	54.808064	351.821266	3.521785	4.711849	164701.344	130352.447	130866.345	.000	.000
184000	.22651310 05	.46484054 01	54.295347	352.402981	4.070565	4.436396	164419.945	129771.479	130303.531	.000	.000
184500	.24032804 05	.45625076 01	53.812890	352.663647	4.567050	4.337723	164153.680	129221.339	129770.583	.000	.000
185000	.25389260 05	.44814721 01	53.358353	352.669632	5.019250	4.384060	163902.098	128702.340	129267.803	.000	.000
185500	.26722119 05	.44051614 01	52.928182	352.470669	5.433539	4.551046	163665.373	128213.601	128794.337	.000	.000
190000	.28032768 05	.43333453 01	52.518418	352.104740	5.815062	4.819668	163442.590	127753.648	128349.758	.000	.000
190500	.29322512 05	.42657528 01	52.125107	351.601368	6.168024	5.174842	163232.910	127320.744	127929.383	.000	.000
191000	.30592577 05	.42021009 01	51.744500	350.983906	6.495891	5.604424	163035.453	126913.079	127534.457	.000	.000
191500	.31844102 05	.41421103 01	51.373140	350.271095	6.801561	6.098533	162849.355	126528.863	127162.247	.000	.000
192000	.33078147 05	.40855147 01	51.007895	349.478207	7.087467	6.649015	162673.789	126166.391	126811.102	.000	.000
192500	.34295693 05	.40320645 01	50.645956	348.617859	7.355681	7.249091	162507.980	125824.063	126473.473	.000	.000
193000	.35497645 05	.39815278 01	50.284824	347.700615	7.607968	7.893062	162351.209	125500.395	126165.919	.000	.000
193500	.36684848 05	.39336907 01	49.922283	346.735413	7.845852	8.576104	162202.814	125194.018	125869.115	.000	.000
194000	.37858080 05	.38883577 01	49.556380	345.729900	8.070654	9.294089	162062.186	124903.676	125587.848	.000	.000
194500	.39018066 05	.38453493 01	49.185409	344.690678	8.283525	10.043483	161928.768	124628.224	125321.003	.000	.000
195000	.40165477 05	.38045015 01	48.807875	343.623482	8.485474	10.821214	161802.053	124366.608	125067.563	.000	.000
195500	.41300940 05	.37656638 01	48.422476	342.533371	8.677391	11.624615	161681.574	124117.868	124826.596	.000	.000
200000	.42425035 05	.37286991 01	48.028088	341.424786	8.860063	12.451349	161566.904	123881.123	124597.249	.000	.000
200500	.43538306 05	.36934815 01	47.623754	340.301674	9.034191	13.299364	161457.656	123655.566	124378.741	.000	.000
201000	.44641260 05	.36598953 01	47.208650	339.167538	9.200399	14.166844	161353.467	123440.460	124170.357	.000	.000
201500	.45734370 05	.36278349 01	46.782086	338.025517	9.359250	15.052172	161254.012	123235.125	123971.436	.000	.000
202000	.46818078 05	.35972027 01	46.343493	336.878414	9.511247	15.953917	161158.980	123038.937	123781.382	.000	.000
202500	.47892800 05	.35679089 01	45.892401	335.728737	9.656844	16.870799	161068.115	122851.321	123599.629	.000	.000
203000	.48958924 05	.35396706 01	45.428439	334.578743	9.796457	17.801649	160981.137	122671.746	123425.666	.000	.000
203500	.50016815 05	.35130113 01	44.951321	333.430443	9.930458	18.745437	160897.816	122499.722	123259.017	.000	.000
204000	.51066820 05	.34872600 01	44.460832	332.285641	10.059191	19.701214	160817.932	122334.795	123099.244	.000	.000
204500	.52109253 05	.34625512 01	43.956893	331.145943	10.182964	20.668132	160741.283	122176.544	122945.938	.000	.000
205000	.53144425 05	.34388237 01	43.439244	330.012787	10.302067	21.645416	160667.678	122024.577	122798.721	.000	.000
205500	.54172616 05	.34160208 01	42.908036	328.887424	10.416759	22.632358	160596.939	121878.532	122657.239	.000	.000
210000	.55194101 05	.33940895 01	42.363234	327.770996	10.527285	23.628310	160528.906	121738.070	122521.167	.000	.000
210500	.56209130 05	.33729804 01	41.804901	326.664474	10.633884	24.632681	160463.424	121602.875	122390.196	.000	.000
211000	.57217945 05	.33526474 01	41.233141	325.568718	10.736703	25.644927	160400.348	121472.648	122264.040	.000	.000
211500	.58220772 05	.33330473 01	40.648093	324.484470	10.835994	26.664541	160339.547	121347.118	122142.432	.000	.000
212000	.59217823 05	.33141398 01	40.049920	323.412354	10.931912	27.691069	160280.893	121226.021	122025.120	.000	.000
212500	.60209300 05	.32958866 01	39.438810	322.352913	11.024623	28.724083	160224.270	121109.116	121911.867	.000	.000
213000	.61195396 05	.32782520 01	38.814974	321.306587	11.114279	29.763190	160169.564	120996.173	121802.454	.000	.000
213500	.62176291 05	.32612025 01	38.178645	320.273739	11.201023	30.808021	160116.676	120886.978	121696.671	.000	.000
214000	.63152151 05	.32447063 01	37.530065	319.254654	11.284990	31.858236	160065.502	120781.325	121594.320	.000	.000
214500	.64123143 05	.32287336 01	36.869491	318.249550	11.366303	32.913517	160015.953	120679.025	121495.218	.000	.000
215000	.65089421 05	.32132563 01	36.197187	317.258572	11.445079	33.973577	159967.939	120579.899	121399.188	.000	.000
215500	.66051126 05	.31982471 01	35.513435	316.281837	11.521427	35.038131	159921.381	120483.771	121306.064	.000	.000

J MATRIX ITERATION NUMBER 1

	X	Y	Z	DX	DY	DZ	KE	KM	RI(04)
X	.39600139 05	-.39776664 05	-.27038500 05	.46964901 08	.55276757 08	-.23955260 08	-.90956575 03	.29998991 00	-.15310865 04
Y	-.39776664 05	.43703537 05	.27128650 05	-.47122316 08	-.55886057 08	.24145063 08	.91996112 03	-.30496310 00	.10590063 04
Z	-.27038500 05	.27128650 05	.18536771 05	-.32234417 08	-.38041208 08	.16429419 08	.62233586 03	-.20198409 00	.11725079 04
DX	.46964901 08	-.47122316 08	-.32234417 08	.56074601 11	.66239854 11	-.28577936 11	-.10819581 07	.35044090 03	-.20886475 07
DY	.55276757 08	-.55886057 08	-.38041208 08	.66239854 11	.78696551 11	-.33815879 11	-.12803780 07	.41289389 03	-.23537380 07
DZ	-.23955260 08	.24145063 08	.16429419 08	-.28577936 11	-.33815879 11	.14585199 11	.55301321 06	-.18060573 03	.98034275 06
KE	-.90956575 03	.91996112 03	.62233586 03	-.10819581 07	-.12803780 07	.55301321 06	.21118360 02	-.69902279-02	.33029629 02
KM	.29998991 00	-.30496310 00	-.20198409 00	.35044090 03	.41289389 03	-.18060573 03	-.69902279-02	.10000288 00	-.44598644-02
RI(04)	-.15310865 04	.10590063 04	.11725079 04	-.20886475 07	-.23537380 07	.98034275 06	.33029629 02	-.44598644-02	.15253947 04
LA(04)	-.16776758 06	.14168826 06	.12673398 06	-.22556311 09	-.26758232 09	.10963763 09	.38300256 04	-.66628692 00	.40086838 05
LO(04)	.92362389 05	-.98138448 05	-.49775867 05	.79468627 08	.73460110 08	-.41798707 08	-.17955220 04	.89233658 00	.18073296 05

	LA(04)	LO(04)
X	-.16776758 06	.92362389 05
Y	.14168826 06	-.98138448 05
Z	.12673398 06	-.49775867 05
DX	-.22556311 09	.79468627 08
DY	-.26758232 09	.73460110 08
DZ	.10963763 09	-.41798707 08
KE	.38300256 04	-.17955220 04
KM	-.66628692 00	.89233658 00
RI(04)	.40086838 05	.18073296 05
LA(04)	.33640872 07	.16929782 07
LO(04)	.16929782 07	.27998113 07

CORRELATIONS BASED ON J MATRIX ITERATION NUMBER 1

	X	Y	Z	DX	DY	DZ	KE	KM	RI(04)
X	-.10000000 01	.99074965 00	.99796937 00	-.99664836 00	-.99018501 00	.99677322 00	.99461646 00	-.47670756-02	.19699728 00
Y	.99074965 00	-.10000000 01	-.98763181 00	.98634184 00	.98743734 00	-.99095992 00	-.99225500 00	.47799678-02	-.13439755 00
Z	.99796937 00	-.98763181 00	-.10000000 01	.99981511 00	.99600016 00	-.99919213 00	-.99466696 00	.46913071-02	-.22049951 00
DX	-.99664836 00	.98634184 00	.99981511 00	-.10000000 01	-.99714524 00	.99929011 00	.99425381 00	-.46797800-02	.22583483 00
DY	-.99018501 00	.98743734 00	.99600016 00	-.99714524 00	-.10000000 01	.99812897 00	.99318523 00	-.46542997-02	.21482714 00
DZ	.99677322 00	-.99095992 00	-.99919213 00	.99929011 00	.99812897 00	-.10000000 01	-.99643560 00	.47289977-02	-.20784072 00
KE	.99461646 00	-.99225500 00	-.99466696 00	.99425381 00	.99318523 00	-.99643560 00	-.10000000 01	.48101098-02	-.18402739 00
KM	-.47670756-02	.47799678-02	.46913071-02	-.46797800-02	-.46542997-02	.47289977-02	.48101098-02	-.10000000 01	.36109734-03
RI(04)	.19699728 00	-.13439755 00	-.22049951 00	.22583483 00	.21482714 00	-.20784072 00	-.18402739 00	.36109734-03	-.10000000 01
LA(04)	.45964872 00	-.38289895 00	-.50750745 00	.51933950 00	.52005100 00	-.49495970 00	-.45439961 00	.11487391-02	-.55959916 00
LO(04)	-.27738465 00	.23070917 00	.21849295 00	-.20056181 00	-.15649820 00	.20684370 00	.23350504 00	-.16863902-02	-.27655522 00

	LA(04)	LO(04)
X	.45964872 00	-.27738465 00
Y	-.38289895 00	.23070917 00
Z	-.50750745 00	.21849295 00
DX	.51933950 00	-.20056181 00
DY	.52005100 00	-.15649820 00
DZ	-.49495970 00	.20684370 00
KE	-.45439961 00	.23350504 00
KM	.11487391-02	-.16863902-02
RI(04)	-.55959916 00	-.27655522 00
LA(04)	-.10000000 01	-.55163696 00
LO(04)	-.55163696 00	-.10000000 01

ODP SAMPLE OUTPUT LISTING

ITERATION NUMBER 1 EPOCH 62/10/17 172346.000 CLOCK 223530 SOS .14442 00 QSOS .14442 00

Q	DQ	STDEVDQ	OLD Q	NEW Q	NOMINAL Q	DQ (NOM)
X	-.72134183-01	.35672513 01	.41668173 04	.41667451 04	.41668173 04	-.72143554-01
Y	-.20595787-01	.23840298 01	-.43299222 04	-.43299427 04	-.43299222 04	-.20566848-01
Z	.37169918-01	.28833543 01	-.26569326 04	-.26568954 04	-.26569326 04	.37170410-01
DX	.79531815-04	.48928886-02	.66119558 01	.66120353 01	.66119558 01	.79512595-04
DY	-.52665526-04	.40113521-02	.80167139 01	.80166611 01	.80167139 01	-.52690506-04
DZ	-.91949002-04	.53079110-02	-.34633899 01	-.34634818 01	-.34633899 01	-.91969965-04
KE	.20062559-02	.31599788 01	.39860320 06	.39860320 06	.39860320 06	.00000000 00
KR	.22767756-04	.31622774 01	.49027779 04	.49027779 04	.49027779 04	.00000000 00
STA 4						
RI	.36656847-05	.31621986-01	.63725297 04	.63725297 04	.63725297 04	.00000000 00
LA	-.33818076-04	.26474068-01	-.31210140 02	-.31210173 02	-.31210140 02	-.33617020-04
LO	.66138746-04	.30115323-01	.13688502 03	.13688508 03	.13688502 03	.64849854-04

J INVERSE ITERATION NUMBER 1

	X	Y	Z	DX	DY	DZ	KE	KM	RI(04)
X	.12725282 02	.59629142 01	.14501103 01	-.15763095-01	.12211473-01	.71493821-02	.16496739 00	-.53641669-02	.65881810-04
Y	.59629142 01	.56835979 01	-.19982685 01	-.97780287-02	.92502131-02	.49571350-02	.89528815-01	-.15079631-02	.42724343-03
Z	.14501103 01	-.19982685 01	.83137321 01	-.43816152-03	-.23795955-02	-.95857459-02	.35788669 00	-.48965414-02	-.79979233-03
DX	-.15763095-01	-.97780287-02	-.43816152-03	.23940359-04	-.17858136-04	-.42481453-05	-.49344565-05	.10749084-05	.18630933-06
DY	.12211473-01	.92502131-02	-.23795955-02	-.17858136-04	.16090945-04	.98746895-05	.69098931-04	-.33038053-05	.15348640-06
DZ	.71493821-02	.49571350-02	-.95857459-02	-.42481453-05	.98746895-05	.28173920-04	-.52354085-03	-.61311427-05	.98087244-06
KE	.16496739 00	.89528815-01	.35788669 00	-.49344565-05	.69098931-04	-.52354085-03	.99854659 01	.60607528-04	.22524264-04
KM	-.53641669-02	-.15079631-02	-.48965414-02	.10749084-05	-.33038053-05	-.61311427-05	.60607528-04	.99999984 01	-.12598109-06
RI(04)	.65881810-04	.42724343-03	-.79979233-03	.18630933-06	.15348640-06	.98087244-06	.22524264-04	-.12598109-06	.99995001-03
LA(04)	-.20913241-01	.19507623-01	-.63539552-01	.26208882-04	.19608282-04	.96411956-04	.19303332-02	-.11189225-04	-.36137071-05
LO(04)	.61498851-01	.64082406-01	.34373521-03	-.12075471-03	.99387927-04	-.90493425-05	-.19392378-03	.53081921-05	-.34361208-06

	LA(04)	LO(04)
X	-.20913241-01	.61498851-01
Y	.19507623-01	.64082406-01
Z	-.63539552-01	.34373521-03
DX	.26208882-04	-.12075471-03
DY	.19608282-04	.99387927-04
DZ	.96411956-04	-.90493425-05
KE	.19303332-02	-.19392378-03
KM	-.11189225-04	.53081921-05
RI(04)	-.36137071-05	-.34361208-06
LA(04)	.70087627-03	.24845214-05
LO(04)	.24845214-05	.90693270-03

COVARIANCE MATRIX OF ESTIMATED PARAMETERS ITERATION NUMBER 1

	X	Y	Z	DX	DY	DZ	KE	KM	RI(04)
X	.12725282 02	.59629142 01	.14501103 01	-.15763095-01	.12211473-01	.71493821-02	.16496739 00	-.53641669-02	.65881810-04
Y	.59629142 01	.56835979 01	-.19982685 01	-.97780287-02	.92502131-02	.49571350-02	.89528815-01	-.15079631-02	.42724343-03
Z	.14501103 01	-.19982685 01	.83137321 01	-.43816152-03	-.23795955-02	-.95857459-02	.35788669 00	-.48965414-02	-.79979233-03
DX	-.15763095-01	-.97780287-02	-.43816152-03	.23940359-04	-.17958136-04	-.42481453-05	-.49344565-05	.10749084-05	.18630933-06
DY	.12211473-01	.92502131-02	-.23795955-02	-.17958136-04	.16090945-04	.98746895-05	.69098931-04	-.33038053-05	.15348640-06
DZ	.71493821-02	.49571350-02	-.95857459-02	-.42481453-05	.98746895-05	.28173920-04	-.52354085-03	-.61311427-05	.98087244-06
KE	.16496739 00	.89528815-01	.35788669 00	-.49344565-05	.69098931-04	-.52354085-03	.99856659 01	.60607528-04	.22524264-04
KM	-.53641669-02	-.15079631-02	-.48965414-02	.10749084-05	-.33038053-05	-.61311427-05	.60607528-04	.99999984 01	-.12598109-06
RI(04)	.65881810-04	.42724343-03	-.79979233-03	.18630933-06	.15348640-06	.98087244-06	.22524264-04	-.12598109-06	.99995001-03
LA(04)	-.20913241-01	.19507623-01	-.63539552-01	.26208882-04	.19608282-04	.96411956-04	.19303332-02	-.11189225-04	-.36137071-05
LO(04)	.61498851-01	.64082406-01	.34373521-03	-.12075471-03	.99387927-04	-.90493425-05	-.19392378-03	.53081921-05	-.34361208-06

	LA(04)	LO(04)
X	-.20913241-01	.61498851-01
Y	.19507623-01	.64082406-01
Z	-.63539552-01	.34373521-03
DX	.26208882-04	-.12075471-03
DY	.19608282-04	.99387927-04
DZ	.96411956-04	-.90493425-05
KE	.19303332-02	-.19392378-03
KM	-.11189225-04	.53081921-05
RI(04)	-.36137071-05	-.34361208-06
LA(04)	.70387627-03	.24845214-05
LO(04)	.24845214-05	.90693270-03

CORRELATION MATRIX OF ESTIMATED PARAMETERS ITERATION NUMBER 1

	X	Y	Z	DX	DY	DZ	KE	KM	RI(04)
X	.99999999 00	.70115361 00	.14098383 00	-.90311374 00	.85338216 00	.37758189 00	.14634578-01	-.47551981-03	.58404009-03
Y	.70115361 00	.99999999 00	-.29069941 00	-.83825142 00	.96727347 00	.39173776 00	.11884119-01	-.20002261-03	.56672785-02
Z	.14098383 00	-.29069941 00	.10000000 01	-.31057814-01	-.20573792 00	-.62633151 00	.39279266-01	-.53702122-03	-.87718274-02
DX	-.90311374 00	-.83825142 00	-.31057814-01	.10000000 01	-.90987142 00	-.16357254 00	-.31914630-03	.69471418-04	.12041487-02
DY	.85338216 00	.96727347 00	-.20573792 00	-.90987142 00	.10000000 01	.46377681 00	.54512534-02	-.26044960-03	.12100129-02
DZ	.37758189 00	.39173776 00	-.62633151 00	-.16357254 00	.46377681 00	.10000000 01	-.31213522-01	-.36527321-03	.58438592-02
KE	.14634578-01	.11884119-01	.39279266-01	-.31914630-03	.54512534-02	-.31213522-01	.10000000 01	.60651624-05	.22541214-03
KM	-.47551981-03	-.20002261-03	-.53702122-03	.69471418-04	-.26044960-03	-.36527321-03	.60651624-05	.10000000 01	-.12598425-05
RI(04)	.58404009-03	.56672785-02	-.87718274-02	.12041487-02	.12100129-02	.58438592-02	.22541214-03	-.12598425-05	.10000000 01
LA(04)	-.22144555 00	.30908077 00	-.83238731 00	.20233103 00	.18464097 00	.68609866 00	.23074241-01	-.13365319-03	-.43166130-02
LO(04)	.57246081 00	.89256448 00	.39585714-02	-.81950425 00	.82272618 00	-.56611655-01	-.20377897-02	.55738994-04	-.36082095-03

	LA(04)	LO(04)
X	-.22144555 00	.57246081 00
Y	.30908077 00	.89256448 00
Z	-.83238731 00	.39585714-02
DX	.20233103 00	-.81950425 00
DY	.18464097 00	.82272618 00
DZ	.68609866 00	-.56611655-01
KE	.23074241-01	-.20377897-02
KM	-.13365319-03	.55738994-04
RI(04)	-.43166130-02	-.36082095-03
LA(04)	.99999998 00	.31162660-02
LO(04)	.31162660-02	.10000000 01

STATION NUMBER 4 62/10/17 ITERATION NUMBER 1 PASS NUMBER 000000 PAGE 1

TIME	TC	Q	FRQ	R			DEC			HA			
174000	1	4	8215.0	.57619011 04	.467 00	-.0027	.35011490 03	.467 00	.0114	.73081727 02	.474 00	.0094
174500	1	4	8215.0	.64200389 04	.452 00	.0029	.35092160 03	.452 00	-.0091	.50815342 02	.458 00	.0090
175000	1	4	8215.0	.76198391 04	.450 00	.0031	.35295752 03	.450 00	-.0070	.35384111 02	.454 00	-.0241
175500	1	4	8215.0	.90720253 04	.450 00	.0018	.35502158 03	.450 00	-.0008	.25324620 02	.451 00	.0047
180000	1	4	8215.0	.10622741 05	.449 00	-.0061	.35679488 03	.449 00	-.0065	.18669922 02	.450 00	.0077
180500	1	4	8215.0	.12200407 05	.449 00	.0031	.35827068 03	.449 00	.0156	.14132577 02	.450 00	.0028
181000	1	4	8215.0	.13772310 05	.449 00	.0022	.35950364 03	.449 00	-.0039	.10960196 02	.449 00	.0057
181500	1	4	8215.0	.15323582 05	.449 00	-.0045	.54729560 00	.449 00	.0088	.87088916 01	.449 00	.0082
182000	1	4	8215.0	.16847760 05	.449 00	-.0115	.14435213 01	.449 00	.0085	.71062342 01	.450 00	.0141
182500	1	4	8215.0	.18342486 05	.449 00	.0005	.22235397 01	.449 00	.0010	.59776009 01	.450 00	.0185
183000	1	4	8215.0	.19807442 05	.450 00	-.0129	.29105107 01	.450 00	.0081	.52063725 01	.450 00	.0015
183500	1	4	8215.0	.21243322 05	.450 00	.0005	.35217847 01	.450 00	.0137	.47118485 01	.450 00	.0046
184000	1	4	8215.0	.22651310 05	.450 00	.0134	.40705649 01	.450 00	.0013	.44363958 01	.451 00	-.0058
184500	1	4	8215.0	.24032804 05	.450 00	.0054	.45670502 01	.450 00	.0003	.43377230 01	.451 00	.0063
185000	1	4	8215.0	.25389260 05	.450 00	-.0105	.50192498 01	.450 00	-.0016	.43840598 01	.451 00	-.0056
185500	1	4	8215.0	.26722119 05	.450 00	.0022	.54335390 01	.450 00	.0037	.45510460 01	.452 00	.0140
190000	1	4	8215.0	.28032768 05	.450 00	.0042	.58150623 01	.450 00	-.0127	.48196676 01	.452 00	-.0032
190500	1	4	8215.0	.29322512 05	.450 00	-.0042	.61680242 01	.450 00	.0036	.51748423 01	.453 00	.0069
191000	1	4	8215.0	.30592577 05	.450 00	-.0007	.64958913 01	.450 00	.0074	.56044244 01	.453 00	.0017
191500	1	4	8215.0	.31844102 05	.450 00	-.0022	.68015605 01	.450 00	.0184	.60985331 01	.453 00	.0053
192000	1	4	8215.0	.33078147 05	.450 00	.0020	.70874672 01	.450 00	-.0036	.66490153 01	.454 00	-.0012
192500	1	4	8215.0	.34295693 05	.450 00	.0049	.73556808 01	.450 00	.0082	.72490906 01	.454 00	.0097
193000	1	4	8215.0	.35497445 05	.450 00	.0005	.76079681 01	.450 00	.0052	.78930616 01	.454 00	.0069
193500	1	4	8215.0	.36684848 05	.450 00	.0020	.78458524 01	.450 00	-.0085	.85761043 01	.454 00	.0099
194000	1	4	8215.0	.37858080 05	.450 00	.0063	.80706543 01	.450 00	.0023	.92940886 01	.455 00	.0033
194500	1	4	8215.0	.39018066 05	.450 00	-.0020	.82835247 01	.450 00	-.0237	.10043483 02	.455 00	-.0045
195000	1	4	8215.0	.40165477 05	.450 00	-.0015	.84854738 01	.450 00	.0042	.10821214 02	.455 00	-.0042
195500	1	4	8215.0	.41300940 05	.450 00	.0073	.86773909 01	.450 00	-.0085	.11624615 02	.456 00	.0077
200000	1	4	8215.0	.42425035 05	.450 00	-.0078	.88600630 01	.450 00	.0070	.12451349 02	.456 00	.0123
200500	1	4	8215.0	.43538306 05	.450 00	.0049	.90341910 01	.450 00	-.0096	.13299364 02	.456 00	-.0066
201000	1	4	8215.0	.44641260 05	.450 00	-.0059	.92003991 01	.450 00	.0032	.14168844 02	.456 00	.0215
201500	1	4	8215.0	.45734370 05	.451 00	-.0034	.93592498 01	.451 00	-.0052	.15052172 02	.457 00	-.0014
202000	1	4	8215.0	.46819078 05	.451 00	-.0034	.95112465 01	.451 00	-.0154	.15953917 02	.457 00	-.0023
202500	1	4	8215.0	.47892800 05	.451 00	.0005	.96568436 01	.451 00	-.0011	.16870799 02	.457 00	.0092
203000	1	4	8215.0	.48958924 05	.451 00	.0103	.97964573 01	.451 00	.0011	.17801649 02	.458 00	.0003
203500	1	4	8215.0	.50016815 05	.451 00	-.0024	.99304584 01	.451 00	-.0145	.18745437 02	.458 00	.0021
204000	1	4	8215.0	.51066820 05	.451 00	.0005	.10059190 02	.451 00	-.0059	.19701214 02	.458 00	-.0135
204500	1	4	8215.0	.52109253 05	.451 00	-.0005	.10182964 02	.451 00	.0000	.20668132 02	.458 00	-.0019
205000	1	4	8215.0	.53144425 05	.451 00	-.0088	.10302067 02	.451 00	.0110	.21645416 02	.459 00	.0043
205500	1	4	8215.0	.54172616 05	.451 00	.0024	.10416759 02	.451 00	.0113	.22632357 02	.459 00	.0006
210000	1	4	8215.0	.55194101 05	.451 00	.0029	.10527285 02	.451 00	-.0041	.23628310 02	.459 00	-.0099
210500	1	4	8215.0	.56209130 05	.451 00	-.0059	.10633864 02	.451 00	-.0007	.24632681 02	.460 00	-.0087
211000	1	4	8215.0	.57217945 05	.452 00	.0034	.10736703 02	.452 00	-.0100	.25644926 02	.460 00	.0051
211500	1	4	8215.0	.58220772 05	.452 00	.0063	.10835994 02	.452 00	.0000	.26664540 02	.460 00	-.0035
212000	1	4	8215.0	.59217823 05	.452 00	-.0068	.10931912 02	.452 00	.0072	.27691069 02	.460 00	.0042
212500	1	4	8215.0	.60209300 05	.452 00	.0015	.11024623 02	.452 00	-.0047	.28724083 02	.461 00	.0116
213000	1	4	8215.0	.61195396 05	.452 00	.0034	.11114279 02	.452 00	-.0201	.29763189 02	.461 00	-.0128
213500	1	4	8215.0	.62176291 05	.452 00	-.0039	.11201023 02	.452 00	-.0001	.30808020 02	.461 00	-.0027
214000	1	4	8215.0	.63152151 05	.452 00	.0000	.11284990 02	.452 00	.0027	.31856236 02	.462 00	.0086
214500	1	4	8215.0	.64123143 05	.453 00	.0093	.11366303 02	.453 00	-.0062	.32913517 02	.462 00	.0021
215000	1	4	8215.0	.65089421 05	.453 00	.0015	.11445079 02	.453 00	-.0052	.33973577 02	.462 00	.0037
215500	1	4	8215.0	.66051126 05	.453 00	.0049	.11521427 02	.453 00	-.0186	.35038131 02	.463 00	.0023

STATION NUMBER 4 62/10/17 ITERATION NUMBER 1 PASS NUMBER 000000 PAGE 2

TIME	TC	Q	FRQ	CC3				
174000	1	4	8215.0	.10561253	06	.467	00	-.0166
174500	1	4	8215.0	.12111962	06	.452	00	.0293
175000	1	4	8215.0	.12906898	06	.450	00	.0010
175500	1	4	8215.0	.13241482	06	.450	00	.0059
180000	1	4	8215.0	.13355869	06	.449	00	-.0039
180500	1	4	8215.0	.13369563	06	.449	00	-.0039
181000	1	4	8215.0	.13337236	06	.449	00	.0449
181500	1	4	8215.0	.13284291	06	.449	00	-.0176
182000	1	4	8215.0	.13222941	06	.449	00	-.0176
182500	1	4	8215.0	.13159226	06	.449	00	.0078
183000	1	4	8215.0	.13096166	06	.450	00	-.0195
183500	1	4	8215.0	.13035245	06	.450	00	-.0078
184000	1	4	8215.0	.12977148	06	.450	00	.0098
184500	1	4	8215.0	.12922134	06	.450	00	.0322
185000	1	4	8215.0	.12870234	06	.450	00	-.0098
185500	1	4	8215.0	.12821360	06	.450	00	.0264
190000	1	4	8215.0	.12775365	06	.450	00	-.0039
190500	1	4	8215.0	.12732074	06	.450	00	.0107
191000	1	4	8215.0	.12691308	06	.450	00	.0000
191500	1	4	8215.0	.12652886	06	.450	00	-.0020
192000	1	4	8215.0	.12616639	06	.450	00	-.0313
192500	1	4	8215.0	.12582406	06	.450	00	-.0195
193000	1	4	8215.0	.12550039	06	.450	00	.0088
193500	1	4	8215.0	.12519402	06	.450	00	-.0039
194000	1	4	8215.0	.12490367	06	.450	00	.0020
194500	1	4	8215.0	.12462822	06	.450	00	-.0127
195000	1	4	8215.0	.12436661	06	.450	00	-.0166
195500	1	4	8215.0	.12411787	06	.450	00	-.0225
200000	1	4	8215.0	.12388122	06	.450	00	-.0303
200500	1	4	8215.0	.12365557	06	.450	00	.0234
201000	1	4	8215.0	.12344046	06	.450	00	-.0303
201500	1	4	8215.0	.12323512	06	.451	00	-.0098
202000	1	4	8215.0	.12303894	06	.451	00	.0449
202500	1	4	8215.0	.12285132	06	.451	00	.0088
203000	1	4	8215.0	.12267175	06	.451	00	-.0244
203500	1	4	8215.0	.12249972	06	.451	00	.0049
204000	1	4	8215.0	.12233479	06	.451	00	.0020
204500	1	4	8215.0	.12217654	06	.451	00	-.0186
205000	1	4	8215.0	.12202458	06	.451	00	-.0215
205500	1	4	8215.0	.12187853	06	.451	00	.0000
210000	1	4	8215.0	.12173807	06	.451	00	.0029
210500	1	4	8215.0	.12160287	06	.451	00	-.0127
211000	1	4	8215.0	.12147265	06	.452	00	-.0273
211500	1	4	8215.0	.12134712	06	.452	00	.0195
212000	1	4	8215.0	.12122602	06	.452	00	.0068
212500	1	4	8215.0	.12110912	06	.452	00	.0225
213000	1	4	8215.0	.12099617	06	.452	00	-.0234
213500	1	4	8215.0	.12088698	06	.452	00	-.0020
214000	1	4	8215.0	.12078132	06	.452	00	-.0371
214500	1	4	8215.0	.12067903	06	.453	00	.0068
215000	1	4	8215.0	.12057990	06	.453	00	-.0254
215500	1	4	8215.0	.12048377	06	.453	00	.0234

DATA STATISTICS STATION 4 ITERATION 1

PASS	DATA TYPE	BEGINNING TIME	END TIME	NUMBER OF POINTS	STD DEV	RMS	FIRST MOMENT	SECOND MOMENT
000000	CC3	10/17-174000	10/17-215500	52	.194-01	.195-01	-.244-02	.381-03
	HA	10/17-174000	10/17-215500	52	.817-02	.857-02	.258-02	.234-04
	DEC	10/17-174000	10/17-215500	52	.908-02	.911-02	-.807-03	.830-04
	R	10/17-174000	10/17-215500	52	.540-02	.540-02	.121-03	.292-04

ITERATION 1 GENERATED 15 PLOTS.

```
                                                                  127
                                                                  100
JFFLINE CONTROL
KEY(4) KEY(5)
END DATA
```

CASE 1 SPACE TRAJECTORIES 1

EPHEMERIS TAPE III WITH SATURN. B-8 IS

GME	.39860320 06	J	.16234500-02	H	-.57499999-05	D	.78749999-05	RE	.63781650 04	REM	.63783256 04		
G	.66709998-19	A	.88782497 29	B	.88800499 29	C	.88837498 29	OME	.41780741-02	AU	.14959900 09		
GMM	.49027779 04	GMS	.13271544 12	GMV	.32476952 06	GMA	.42977799 05	GMC	.37918700 08	GMJ	.12671062 09		

INJECTION CONDITIONS MOON JULIAN DATE 2437955.22483796 OCT. 17,1962 17 23 46.000

GEOC NTRIC XO .41667451 04 YO-.43299427 04 ZO-.26568954 04 DXO .66120353 01 DYO .80166611 01 DZO-.34634818 01
CARTESIAN GMC .00000000 00 SGC .00000000 00 TO .62626000 05 GMA .28667206 03 GHO .25016000 02
EARTH IS THE CENTRAL BODY FOR INTEGRATION COWELL EQUATIONS OF MOTION

0 DAYS 0 HRS. 0 MIN. 0.000 SEC. JULIAN DATE 2437955.22483796 OCT. 17,1962 17 23 46.000

GEOCENTRIC — EQUATORIAL COORDINATES

X	.41667449 04	Y	-.43299425 04	Z	-.26568953 04	DX	.66120351 01	DY	.80166608 01	DZ	-.34634817 01		
R	.65703316 04	DEC	-.23852134 02	RA	.31389964 03	V	.10953609 02	PTH	.16251692 01	AZ	.10947026 03		
R	.65703315 04	LAT	-.23852135 02	LON	.27227579 02	VE	.10541656 02	PTE	.16886968 01	AZE	.11026449 03		
XS	-.13631670 09	YS	-.55322907 08	ZS	-.23989678 08	DXS	.12524825 02	DYS	-.24894045 02	DZS	-.10793871 02		
XM	.54334411 05	YM	.34831499 06	ZM	.12624281 06	DXM	-.10213763 01	DYM	.18375549 00	DZM	.14711733 00		
XT	.54334411 05	YT	.34831499 06	ZT	.12624281 06	DXT	-.10213763 01	DYT	.18375549 00	DZT	.14711733 00		
RS	.14905828 09	VS	.29884651 02	RM	.37645001 06	VM	.10481503 01	RT	.37645001 06	VT	.10481503 01		
GED	-.23996381 02	ALT	.19565607 03	LOS	.27541726 03	RAS	.20208933 03	RAM	.81133758 02	LOM	.15446169 03		
DNT	.35000000 02	DT	.37500000 01	DR	.31065270 00	SHA	.63257736 04	DES	-.92615554 01	DEM	.19702862 02		
DAC	.00000000 00	CCL	.82502306 02	MCL	.18107476 03	TCL	.18107476 03						

GEOCENTRIC CONIC

EPOCH OF PERICENTER PASSAGE JULIAN DATE 2437955.22443990 OCT. 17,1962 17 23 11.608

SMA	.29467072 06	ECC	.97772094 00	B	.61854023 05	SLR	.12983711 05	APO	.58277646 06	RCA	.45648046 04		
VH	.12344338 00	C3	-.13527071 01	C1	.71939897 05	TFP	.34392289 02	TF	-.95534136-02	PER	.26531617 05		
FA	.32873819 01	MTA	.00000000 00	EA	.34900515 00	MA	.77776539-02	C3J	-.17360477 01	TFI	.00000000 00		

ALL VECTORS REFERENCED TO EARTH EQUATOR PLANE

X	.41667449 04	Y	-.43299425 04	Z	-.26568953 04	DX	.66120351 01	DY	.80166608 01	DZ	-.34634817 01		
INC	.30425223 02	LAN	.85061813 02	APF	.22970093 03	MX	.58588980 00	MY	.75086606 00	MZ	-.30484063 00		
WX	.50453373 00	WY	-.43592509-01	WZ	.86229080 00	PX	.59953479 00	PY	-.70098764 00	PZ	-.38623089 00		
QX	-.62129196 00	QY	.71183984 00	QZ	-.32753668 00	RX	-.25103895 00	RY	.29351958 00	RZ	-.92240238 00		
BX	-.62129197 00	BY	-.71183987 00	BZ	.32753670 00	TX	-.75995885 00	TY	-.64997119 00	TZ	.00000000 00		
DAP	-.22720176 02	RAP	.31053943 03										
BTQ	.57823104 05	BRQ	-.21963806 05	B	.61854023 05	THA	.33920098 03						

HELIOCENTRIC — EQUATORIAL COORDINATES

X	.13632086 09	Y	.55318577 08	Z	.23987021 08	DX	-.59127903 01	DY	.32910705 02	DZ	.73303888 01		
R	.14906005 09	LAT	.92604087 01	LON	.22087161 02	V	.34231713 02	PTH	.13490726 02	AZ	.79396675 02		
XE	.13631670 09	YE	.55322907 08	ZE	.23989678 08	DXE	-.12524825 02	DYE	.24894045 02	DZE	.10793871 02		
XT	.13637103 09	YT	.55671221 08	ZT	.24115920 08	DXT	-.13546202 02	DYT	.25077808 02	DZT	.10940888 02		
LTE	.92615554 01	LOE	.22089334 02	LTT	.92981619 01	LOT	.22206929 02	RST	.14925790 09	VST	.30530327 02		
EPS	.74315923 02	ESP	.27453512-18	SEP	.10568164 03	EPM	.48154580 02	EMP	.74896354 00	REP	.13309646 03		
MPS	.12142411 03	MSP	.12413322 00	SMP	.58451805 02	SEN	.12215462 03	EMS	.57723679 02	ESN	.12174582 00		
EPT	.48154580 02	ETP	.74896354 00	TEP	.13109646 03	TPS	.12142411 03	TSP	.12413322 00	STP	.58451805 02		
SET	.12215462 03	STE	.57723679 02	EST	.12174582 00	RPM	.37880123 06	RPT	.37880123 06	SPN	-.17806430 01		
GCE	.27749769 03	GCT	.28789613 03	SIP	.12116123 03	CPT	.73566704 02	SIN	.73303820 02	D1	.13744620 00		
REP	.65703316 04	VEP	.10953609 02	CPE	.83413856 02	CPS	.92296002 02	D2	.72300577-01	D3	.38774495-03		

2 DAYS 11 HRS. 54 MIN. 42.583 SEC. JULIAN DATE 2437957.72116414 OCT. 20,1962 05 18 28.583

GEOCENTRIC — EQUATORIAL COORDINATES

X	-.17463623 06	Y	.29296706 06	Z	.11894276 06	DX	-.55244588 00	DY	.67397904 00	DZ	.40237213 00
R	.36121308 06	DEC	.19225503 02	PA	.12079896 03	V	.95986849 00	PTH	.80329239 02	AZ	.53392955 02
R	.36121307 06	LAT	.19225503 02	LON	.12988915 02	VE	.24759919 02	PTE	.21901548 01	AZE	.27022267 03
XS	-.13348884 09	YS	-.60639865 08	ZS	-.26295024 08	DXS	.13693268 02	DYS	-.24398835 02	DZS	-.10578816 02
XM	-.16252368 06	YM	.32749119 06	ZM	.13510974 06	DXM	-.93494519 00	DYM	-.36078880 00	DZM	-.63148946-01
XT	-.16252368 06	YT	.32749119 06	ZT	.13510974 06	DXT	-.93494519 00	DYT	-.36078880 00	DZT	-.63148946-01
RS	.14895601 09	VS	.29911872 02	RM	.38976796 06	VM	.10041309 01	RT	.38976796 06	VT	.10041309 01
GED	.19346816 02	ALT	.35483721 06	LOS	.96620785 02	KAS	.20443083 03	RAM	.11639377 03	LON	.85837230 01
OUT	.35000000 02	DT	.48000000 03	DR	.94622812 00	SHA	-.36084786 06	DES	-.10167637 02	DEN	.20282030 02
DAC	.00000000 00	GCL	.25494897 03	MCL	.29061370 01	TCL	.29061370 01				

GEOCENTRIC CONIC

EPOCH OF PERICENTER PASSAGE — JULIAN DATE 2437955.29476280 — OCT. 17,1962 19 04 27.506

SMA	.31003352 06	ECC	.98617927 00	B	.51366880 05	SLR	.85105533 04	APO	.61578213 06	RCA	.42848868 04
WH	.94584980-01	C3	-.12856777 01	C1	.58243745 05	TFP	.20964107 06	TF	.16781959 01	PER	.28633286 06
TA	.17194056 03	MTA	.00000000 00	EA	.99636194 02	MA	.43929516 02	C3J	-.17277679 01	TFI	.59911828 02

ALL VECTORS REFERENCED TO EARTH EQUATOR PLANE

X	-.17463623 06	Y	.29296706 06	Z	.11894276 06	DX	-.55244588 00	DY	.67397904 00	DZ	.40237213 00
INC	.40714021 02	LAN	.96892611 02	APF	.21837895 03	MX	-.58898976 00	MY	-.57969523 00	MZ	.56306625 00
WX	.64756908 00	WY	.78279813-01	WZ	.75797472 00	PX	.56127279 00	PY	-.72178028 00	PZ	-.40497865 00
QX	.51538967 00	QY	.68768103 00	QZ	-.51133887 00	RX	-.24860073 00	RY	.31969323 00	RZ	-.91432703 00
BX	-.51538988 00	BY	-.68768132 00	BZ	.51133910 00	TX	-.78941151 00	TY	-.61386437 00	TZ	.00000030 00
DAP	-.23889664 02	RAP	.30786945 03								
BTQ	.42583029 05	BRQ	-.28727026 05	B	.51366880 05	THA	.32599592 03				

HELIOCENTRIC — EQUATORIAL COORDINATES

X	.13331420 09	Y	.60932832 08	Z	.26413967 08	DX	-.14245713 02	DY	.25072814 02	DZ	.10981188 02
R	.14894020 09	LAT	.10215217 02	LON	.24563331 02	V	.30857298 02	PTH	-.10141166 01	AZ	.68601739 02
XE	.13348884 09	YE	.60639865 08	ZE	.26295024 08	DXE	-.13693268 02	DYE	.24398835 02	DZE	.10578816 02
XT	.13332632 09	YT	.60967356 08	ZT	.26430133 08	DXT	-.14628213 02	DYT	.24038046 02	DZT	.10515667 02
LTE	.10167637 02	LOE	.24430835 02	LTT	.10219606 02	LOT	.24573635 02	RST	.14896804 09	VST	.30039832 02
EPS	.92437893 02	ESP	.13900529 00	SEP	.87423289 02	EPM	.13337100 03	EMP	.42350725 02	MEP	.42782588 01
MPS	.13409310 03	MSP	.98911702-02	SMP	.45895841 02	SEM	.91694337 02	EMS	.88155814 02	ESM	.14968061 00
EPT	.13337100 03	ETP	.42350725 02	TEP	.42782588 01	TPS	.13409310 03	TSP	.98911702-02	STP	.45895841 02
SET	.91694337 02	STE	.88155814 02	EST	.14968061 00	RPM	.40000003 05	RPT	.40000003 05	SPM	.91426160 02
GCE	.10505102 03	GCT	.28167917 03	SIP	.13160282 03	CPT	.79585965 02	SIN	.77095680 02	D1	.13047321 01
REP	.36121308 06	VEP	.95986849 00	CPE	.10488804 03	CPS	.92929512 02	D2	.93640646 00	D3	.54806937-01

2 DAYS 11 HRS. 54 MIN. 42.583 SEC. — JULIAN DATE 2437957.72116414 — OCT. 20,1962 05 18 28.583

CHANGE OF PHASE OCCURS AT THIS POINT — EARTH IS THE CENTRAL BODY FOR INTEGRATION — COWELL EQUATIONS OF MOTION

2 DAYS 19 HRS. 47 MIN. 13.385 SEC. — JULIAN DATE 2437958.04929844 — OCT. 20,1962 13 10 59.385

CASE 1 SPACE TRAJECTORIES 3

GEOCENTRIC

										EQUATORIAL COORDINATES			
X	-.18856733 06	Y	.31497379 06	Z	.13192145 06	DX	-.28854409 00	DY	.18213239 01	DZ	.10998378 01		
R	.39008896 06	DEC	.19766210 02	RA	.12090795 03	V	.21471194 01	PTH	.67385861 02	AZ	.30356248 03		
R	.39008896 06	LAT	.19766210 02	LON	.25464615 03	VE	.27532923 02	PTE	.41281765 01	AZE	.27095236 03		
XS	-.13309845 09	YS	-.61330649 08	ZS	-.26594535 08	DXS	.13845453 02	DYS	-.24330140 02	DZS	-.10549015 02		
XM	-.18856044 06	YM	.31637430 06	ZM	.13295077 06	DXM	-.90105869 00	DYM	-.42295232 00	DZM	-.89028866-01		
XT	-.18856044 06	YT	.31637430 06	ZT	.13295077 06	DXT	-.90105869 00	DYT	-.42295232 00	DZT	-.89028866-01		
RS	.14894266 09	VS	.29915448 02	RM	.39156563 06	VM	.99936057 00	RT	.39156563 06	VT	.99936057 00		
GED	.19890379 02	ALT	.38371322 06	LOS	.33847804 03	RAS	.20473985 03	RAM	.12079512 03	LOM	.25453332 03		
DUT	.35000000 02	DT	.30000000 02	DR	.19820389 01	SHA	-.38979056 06	DES	-.10285636 02	DEM	.19848628 02		
DAC	.00000000 00	CCL	.25551696 03	MCL	.90032440 02	TCL	.90032440 02						

HELIOCENTRIC

										EQUATORIAL COORDINATES			
X	.13290988 09	Y	.61645622 08	Z	.26726456 08	DX	-.14133997 02	DY	.26151464 02	DZ	.11648853 02		
R	.14892791 09	LAT	.10338251 02	LON	.24882587 02	V	.31927491 02	PTH	.54114051 00	AZ	.68335685 02		
XE	.13309845 09	YE	.61330649 08	ZE	.26594535 08	DXE	-.13845453 02	DYE	.24330140 02	DZE	.10549015 02		
XT	.13290989 09	YT	.61647023 08	ZT	.26727485 08	DXT	-.14746512 02	DYT	.23907188 02	DZT	.10459986 02		
LTC	.10285636 02	LOL	.24739853 02	LTT	.10338599 02	LOT	.24883082 02	RST	.14892868 09	VST	.29973730 02		
EPS	.92091207 02	ESP	.15000707 00	SEP	.87758829 02	EPM	.14810026 03	EMP	.31765340 02	MEP	.13417039 00		
MPS	.11631768 03	MSP	.98911702-02	SMP	.63681719 02	SEM	.87879544 02	EMS	.91969912 02	ESM	.15082012 00		
EPT	.14810026 03	ETP	.31765340 02	TPP	.13417039 00	TPS	.11631768 03	TSP	.98911702-02	STP	.63681719 02		
SET	.87879544 02	STE	.91969912 02	EST	.15082012 00	RPM	.17380914 04	RPT	.17380914 04	SPM	.91154372 02		
GCE	.10448302 03	GCT	.26946361 03	SIP	.26905397 02	CPT	.89146585 02	SIN	-.26569748 00	D1	.29248853 04		
REP	.39008896 06	VEP	.21471194 01	CPE	.10433947 03	CPS	.93009177 02	D2	.12825209 03	D3	.14105063 06		

SELENOCENTRIC

										EQUATORIAL COORDINATES			
X	-.68886718 01	Y	-.14005078 04	Z	-.10293164 04	DX	.61251460 00	DY	.22442762 01	DZ	.11888667 01		
R	.17380914 04	DEC	-.36314045 02	RA	.26971818 03	V	.26125378 01	PTH	-.74283572 02	AZ	.12179708 03		
R	.17380910 04	LAT	-.12025216 02	LON	.33823253 03	VR	.26115122 01	PTR	-.74363631 02	AZR	.12319032 03		
LTS	.15239757 01	LMS	.27556362 03	LTE	.68536252 00	LNE	.75526220 01						
ALT	.91630663-01	SHA	-.15579296 04	ALP	.16104578 03	DR	-.25148652 01	DP	.23328404-01	ASD	.89412282 02		
HGE	.26790878 03	SVL	-.13431677 02	HNG	.11711741 03	SIA	.58687978 02						

SELENOCENTRIC CONIC

EPOCH OF PERICENTER PASSAGE JULIAN DATE 2437958.05523697 OCT. 20,1962 13 19 32.475

SMA	-.41415986 04	ECC	.10365850 01	B	.11304997 04	SLR	.30858383 03	APO	.00000000 00	RCA	.15152023 03		
VH	.10880206 01	C3	.11837888 01	C1	.12300073 04	TFP	-.51308904 03	TF	.67929576 02	LTF	.67891581 02		
TA	-.14250728 03	MTA	.16473235 03	EA	-.47855274 02	MA	-.77229725 01	C3J	-.15896316 01	TFJ	.47787051 02		
ZAE	.13218413 03	ZAP	.13582488 03	ZAC	.78926036 02	DEF	.14946470 03	IR	.41733488 04	GP	.48130586 01		
OP1	.00000000 00	DY	.00000000 00	OP2	.00000000 00								

ALL VECTORS REFERENCED TO EARTH EQUATOR PLANE

X	-.68886718 01	Y	-.14005078 04	Z	-.10293164 04	DX	.61251460 00	DY	.22442762 01	DZ	.11888667 01		
INC	.46774131 02	LAN	.46029383 02	APF	.16669170 02	NX	.85164395 00	NY	.30785902 00	NZ	-.62457720 00		
WX	.52443043 00	WY	-.50591700 00	WZ	.68485072 00	PX	.52138512 00	PY	.82670698 00	PZ	.21145466 00		
QX	-.67314934 00	QY	.24617777 00	QZ	.69732794 00	RX	.13696436 00	RY	.36261325 00	RZ	-.92182015 00		
BX	.78668696 00	BY	-.19793849-01	BZ	-.61703470 00	TX	.93549160 00	TY	-.35334895 00	TZ	.00000000 00		
SXI	.32572418 00	SYI	.86235499 00	SZI	.38761786 00	DAI	.22806357 02	RAI	.69307707 02				
SXO	-.68324279 00	SYO	-.73270382 00	SZO	-.20365419-01	DAO	-.11669318 01	RAO	.22712634 03				
ETE	.18666215 03	ETS	.88239759 01	ETC	.28598605 03								
BTQ	.83988576 03	BRQ	.75671761 03	B	.11304997 04	THA	.42018120 02						

CASE 1 SPACE TRAJECTORIES 4

ALL VECTORS REFERENCED TO TRUE LUNAR EQU. PLANE

X	.15787380 04	Y	-.63041060 03	Z	-.36211765 03	DX	-.21387264 01	DY	.14931733 01	DZ	.14708650 00
INC	.34878819 02	LAN	.14043869 03	APF	.34387388 03	MX	.39994580 00	MY	.21243682 00	MZ	-.29172226 00
WX	.36420854 00	WY	.44085846 00	WZ	.82036331 00	PX	-.59548569 00	PY	.78750850 00	PZ	-.15883063 00
QX	-.71606488 00	QY	-.43066711 00	QZ	.54936221 00	RX	.65375939-02	RY	-.55375324-02	RZ	-.99996330 00
HX	.53398418 00	BY	.62284046 00	BZ	-.57177842 00	IX	.64633137 00	IY	.76305685 00	IZ	.00000000 00
SXI	-.76302385 00	SYI	.64630765 00	SZI	-.85676368-02	DAI	-.49089594 00	RAI	.13973442 03		
SXO	.38550876 00	SYO	-.87312121 00	SZO	.29788218 00	DAO	.17330444 02	RAO	.29384483 03		
ETE	.17951993 03	ETS	.16017543 01	ETC	.27884383 03						
BTT	.92745660 03	BRT	.64642060 03	B	.11305023 04	THA	.34875804 02				

U MATRIX FOR MAPPING FORWARD ITERATION NUMBER 1

	X	Y	Z	DX	DY	DZ	KE	KM	RI(04)
X	.18756301 02	.21474935 03	-.17575883 02	-.38363992-03	.32534433-02	.25782686-03	.00000000 00	.00000000 00	.00000000 00
Y	.64237136 01	-.20085021 03	-.12604194 02	.55911472-03	-.31577376-02	-.48170508-03	.00000000 00	.00000000 00	.00000000 00
Z	-.28406966 02	-.13471061 03	-.20546155 02	.11470743-03	-.20585505-02	-.41240273-03	.00000000 00	.00000000 00	.00000000 00
DX	.30450880 05	.24151982 06	-.15920469 04	-.35163769 00	.36716002 01	.40965142 00	.00000000 00	.00000000 00	.00000000 00
DY	-.69337466 04	.26610970 06	.17512825 05	-.70282850 00	.41779884 01	.63096358 00	.00000000 00	.00000000 00	.00000000 00
DZ	-.14469996 05	-.12820057 06	.82071773 04	.17983529 00	-.19378575 01	-.19086427 00	.00000000 00	.00000000 00	.00000000 00
KE	-.33875847 00	-.51123187 01	-.66427632-01	.10063924-04	-.80278005-04	-.10127592-04	.10000000 01	.00000000 00	.00000000 00
KM	.58545171-02	.19158602-01	.89997499-02	.22554616-06	.69017550-06	.31884235-06	.00000000 00	.10000000 01	.00000000 00
RI(04)	.00000000 00	.00000000 00	.00000000 00	.00000000 00	.00000000 00	.00000000 00	.00000000 00	.00000000 00	.10000000 01
LA(04)	.00000000 00	.00000000 00	.00000000 00	.00000000 00	.00000000 00	.00000000 00	.00000000 00	.00000000 00	.00000000 00
LO(04)	.00000000 00	.00000000 00	.00000000 00	.00000000 00	.00000000 00	.00000000 00	.00000000 00	.00000000 00	.00000000 00

	LA(04)	LO(04)
X	.00000000 00	.00000000 00
Y	.00000000 00	.00000000 00
Z	.00000000 00	.00000000 00
DX	.00000000 00	.00000000 00
DY	.00000000 00	.00000000 00
DZ	.00000000 00	.00000000 00
KE	.00000000 00	.00000000 00
KM	.00000000 00	.00000000 00
RI(04)	.00000000 00	.00000000 00
LA(04)	.10000000 01	.00000000 00
LO(04)	.00000000 00	.10000000 01

CONDITIONS AFTER FORWARD MAPPING 62/10/17 172346.000 TO 62/10/18 170000.000

X= -.83535331 05 Y= .18209547 06 Z= .58298082 05 DX= -.87254211 00 DY= .11639894 01 DZ= .57247581 00

STANDARD DEVIATIONS

X= .12444236 03 Y= .56016234 02 Z= .10388158 03 DX= .88923416-03 DY= .57288651-03 DZ= .68200478-03

COVARIANCE MATRIX AFTER MAPPING ITERATION NUMBER 1

	X	Y	Z	DX	DY	DZ	KE	KM	RI(04)
X	.15485900 05	.48389849 04	.21047732 04	.10981895 00	.42649213-01	.17316310-01	-.29335892 01	.23167914 00	.17108058-01
Y	.48389849 04	.31378184 04	-.31802784 04	.32548353-01	.31582192-01	-.19972495-01	.24991036 01	.16826865 00	-.39452855-02
Z	.21047732 04	-.31802784 04	.10791382 05	.15344603-01	-.34425244-01	.70444508-01	-.15123211 02	.19399555 00	.20329732-01
DX	.10981895 00	.32548353-01	.15344603-01	.79073741-06	.27509720-06	.13001535-06	-.12666633-04	.37506201-05	.12509521-06
DY	.42649213-01	.31582192-01	-.34425244-01	.27509720-06	.32819897-06	-.22122750-06	.78720199-06	.63110601-05	-.65648428-07
DZ	.17316310-01	-.19972495-01	.70444508-01	.13001535-06	-.22122750-06	.46513952-06	-.10781287-03	.40764965-05	.12674186-06
KE	-.29335892 01	.24991036 01	-.15123211 02	-.12666633-04	.78720199-06	-.10781287-03	.99854659 01	.60607528-04	.22524264-04
KM	.23167914 00	.16826865 00	.19399555 00	.37506201-05	.63110601-05	.40764965-05	.60607528-04	.99999984 01	-.12598109-06
RI(04)	.17108058-01	-.39452855-02	.20329732-01	.12509521-06	-.65648428-07	.12674186-06	.22524264-04	-.12598109-06	.99995001-03
LA(04)	.80441229 00	-.67178100 00	.25199967 01	.60021010-05	-.76765047-05	.16102435-04	.19303332-02	-.11189225-04	-.36137071-05
LO(04)	-.26798346 01	-.12658726 01	-.37112257-01	-.16744671-04	-.13549497-04	-.18253570-06	-.19392378-03	.53081921-05	-.34361208-06

	LA(04)	LO(04)
X	.80441229 00	-.26798346 01
Y	-.67178100 00	-.12658726 01
Z	.25199967 01	-.37112257-01
DX	.60021010-05	-.16744671-04
DY	-.76765047-05	-.13549497-04
DZ	.16102435-04	-.18253570-06
KE	.19303332-02	-.19392378-03
KM	-.11189225-04	.53081921-05
RI(04)	-.36137071-05	-.34361208-06
LA(04)	.70087627-03	.24845214-05
LO(04)	.24845214-05	.90693270-03

U MATRIX FOR MAPPING FORWARD ITERATION NUMBER 1

	X	Y	Z	DX	DY	DZ	KE	KM	RI(04)
X	.13321221 03	.15117820 04	.61860258 03	.11115240 00	.77017441 00	.65625842 00	.00000000 00	.00000000 00	.00000000 00
Y	-.10279576 03	-.14998430 04	-.65319183 03	-.12483545 00	-.78051851 00	-.64439742 00	.00000000 00	.00000000 00	.00000000 00
Z	-.11416987 03	-.13064421 04	-.45605443 03	-.65580256-01	-.53632326 00	-.43254884 00	.00000000 00	.00000000 00	.00000000 00
DX	.16770974 06	.17321357 07	.73159530 06	.17220061 03	.89478850 03	.74975561 03	.00000000 00	.00000000 00	.00000000 00
DY	.14375164 06	.19860273 07	.86434544 06	.16335356 03	.10339034 04	.85353203 03	.00000000 00	.00000000 00	.00000000 00
DZ	-.37197994 05	-.93749455 06	-.37680662 06	-.63970108 02	-.46559550 03	-.39363456 03	.00000000 00	.00000000 00	.00000000 00
KE	-.32345352 01	-.37765391 02	-.16217113 02	-.28747342-02	-.19661356-01	-.16386229-01	.10000000 01	.00000000 00	.00000000 00
KM	.79780469 00	.31074218 01	.17988281 01	.70810318-04	.20694732-02	.14038086-02	.00000000 00	.10000000 01	.00000000 00
RI(04)	.00000000 00	.00000000 00	.00000000 00	.00000000 00	.00000000 00	.00000000 00	.00000000 00	.00000000 00	.10000000 01
LA(04)	.00000000 00	.00000000 00	.00000000 00	.00000000 00	.00000000 00	.00000000 00	.00000000 00	.00000000 00	.00000000 00
LB(04)	.00000000 00	.00000000 00	.00000000 00	.00000000 00	.00000000 00	.00000000 00	.00000000 00	.00000000 00	.00000000 00

	LA(04)	LB(04)
X	.00000000 00	.00000000 00
Y	.00000000 00	.00000000 00
Z	.00000000 00	.00000000 00
DX	.00000000 00	.00000000 00
DY	.00000000 00	.00000000 00
DZ	.00000000 00	.00000000 00
KE	.00000000 00	.00000000 00
KM	.00000000 00	.00000000 00
RI(04)	.00000000 00	.00000000 00
LA(04)	.10000000 01	.00000000 00
LB(04)	.00000000 00	.10000000 01

COVARIANCE MATRIX AT IMPACT ITERATION NUMBER 1

	X	Y	Z	DX	DY	DZ	KE	KM	RI(04)
X	.33222087 05	.40141525 05	.21639432 05	-.93441137 01	.25606447 02	.18342634 02	-.58357362 01	.82472067 01	.23415919-01
Y	.40141525 05	.62216704 05	.24240436 05	-.10176200 02	.34198536 02	.29023830 02	-.20387016 02	.31016674 02	.29485208-03
Z	.21639432 05	.24240436 05	.26486851 05	-.55956225 01	.22080672 02	.94210226 01	-.28157838 02	.18126459 02	.25511884-01
DX	-.93441137 01	-.10176200 02	-.55956225 01	.27530273-02	-.66256619-02	-.46854589-02	-.83518409-03	.60492848-03	-.85332195-05
DY	.25606447 02	.34198536 02	.22080672 02	-.66256619-02	.23337763-01	.15008854-01	-.20311268-01	.20765948-01	.14480961-04
DZ	.18342634 02	.29023830 02	.94210226 01	-.46854589-02	.15008854-01	.13763697-01	-.64961281-02	.14005976-01	-.19123571-05
KE	-.58357362 01	-.20387016 02	-.28157838 02	-.83518409-03	-.20311268-01	-.64961281-02	.99854659 01	.60607528-04	.22524264-04
KM	.82472067 01	.31016674 02	.18126459 02	.60492848-03	.20765948-01	.14005976-01	.60607528-04	.99999984 01	-.12598109-06
RI(04)	.23415919-01	.29485208-03	.25511884-01	-.85332195-05	.14480961-04	-.19123571-05	.22524264-04	-.12598109-06	.99995001-03
LA(04)	.12053030 01	-.15247272 00	.30707294 01	-.36006806-03	.15423626-02	-.40736467-03	.19303332-02	-.11189225-04	-.36137071-05
LO(04)	-.39072567 01	-.70434388 01	-.29468931 01	.87196503-03	-.39122654-02	-.32245008-02	-.19392378-03	.53081921-05	-.34361208-06

	LA(04)	LO(04)
X	.12053030 01	-.39072567 01
Y	-.15247272 00	-.70434388 01
Z	.30707294 01	-.29468931 01
DX	-.36006806-03	.87196503-03
DY	.15423626-02	-.39122654-02
DZ	-.40736467-03	-.32245008-02
KE	.19303332-02	-.19392378-03
KM	-.11189225-04	.53081921-05
RI(04)	-.36137071-05	-.34361208-06
LA(04)	.70087627-03	.24845214-05
LO(04)	.24845214-05	.90693270-03

IMPACT PARAMETERS 62/10/20 131059

N MATRIX (TARGET ORBITAL PLANE)

	B.RO	B.TO	TL	C3	S.TS	S.RS
B.RO	.42366557 05	-.24430401 04	-.46212751 00	.66224351-01	-.45149669 00	-.12608646 00
B.TO	-.24430396 04	.42912791 05	-.65232429 01	.68384401-01	.87517533 01	.15593912 01
TL	-.46212758 00	-.65232428 01	.13095767-02	-.28091247-04	-.18341230-02	-.32338769-03
C3	.66219210-01	.68386792-01	-.28001053-04	.13203218-04	.40583124-04	.74042290-05
S.TS	-.45149624 00	.87517530 01	-.18341230-02	.40683419-04	.26234839-02	.46319488-03
S.RS	-.12608618 00	.15593914 01	-.32338770-03	.74030945-05	.46319483-03	.81855340-04

NORMALIZED N MATRIX

	B.RO	B.TO	TL	C3	S.TS	S.RS
B.RO	.99999999 00	-.57296175-01	-.62041851-01	.88545446-01	-.42825630-01	-.67706863-01
B.TO	-.57296161-01	.10000000 01	-.87017115 00	.90849756-01	.82482625 00	.83202849 00
TL	-.62041859-01	-.87017115 00	.99999997 00	-.21294723 00	-.98951812 00	-.98772147 00
C3	.88538572-01	.90852933-01	-.21294576 00	.10000000 01	.21859247 00	.22522492 00
S.TS	-.42825588-01	.82482623 00	-.98951817 00	.21859405 00	.99999999 00	.99954196 00
S.RS	-.67706811-01	.83202855 00	-.98772151 00	.22519041 00	.99954206 00	.99999999 00

DN/DQO MATRIX

	B.RO	B.TO	TL	C3	S.TS	S.RS
X	.29702434 03	-.43133420 03	-.59757646 03	.89320875-02	.28992619 00	.49683683-01
Y	-.23172533 03	.48564350 03	.59018147 03	-.90507585-02	-.29121944 00	-.49934560-01
Z	-.12591554 03	.25444067 03	.40719426 03	-.58601796-02	-.19785431 00	-.34028994-01
DX	.29915606 06	-.47409306 06	-.68992510 06	.10178326 02	.33470694 03	.57415174 02
DY	.30670245 06	-.63529491 06	-.78247175 06	.11970600 02	.38567540 03	.66133346 02
DZ	-.16655345 06	.24805284 06	.36073807 06	-.53512401 01	-.17469651 03	-.29965854 02

B	.11304999 04
B.RO	.58188701 03
B.TO	.96924582 03
B.RT	.64642060 03
B.TT	.92745660 03
TL	.67891583 02
SMAA	.21236274 03
SMIA	.20045302 03
THETA	.41810581 02
DEL T	.13027707 03
DEL B	.29202628 03
DEL S	.14174824 03
TF	.67787051 02

N MATRIX (TARGET EQUATORIAL PLANE)

	B.RT	B.TT	TL
B.RT	.42037748 05	-.23834272 04	-.90443185 00
B.TT	-.23834267 04	.43241590 05	-.64767477 01
TL	-.90443191 00	-.64767477 01	.13095767-02

```
127
100

OFFLINE CONTROL
ELAMINATE JOB
END DATA
```

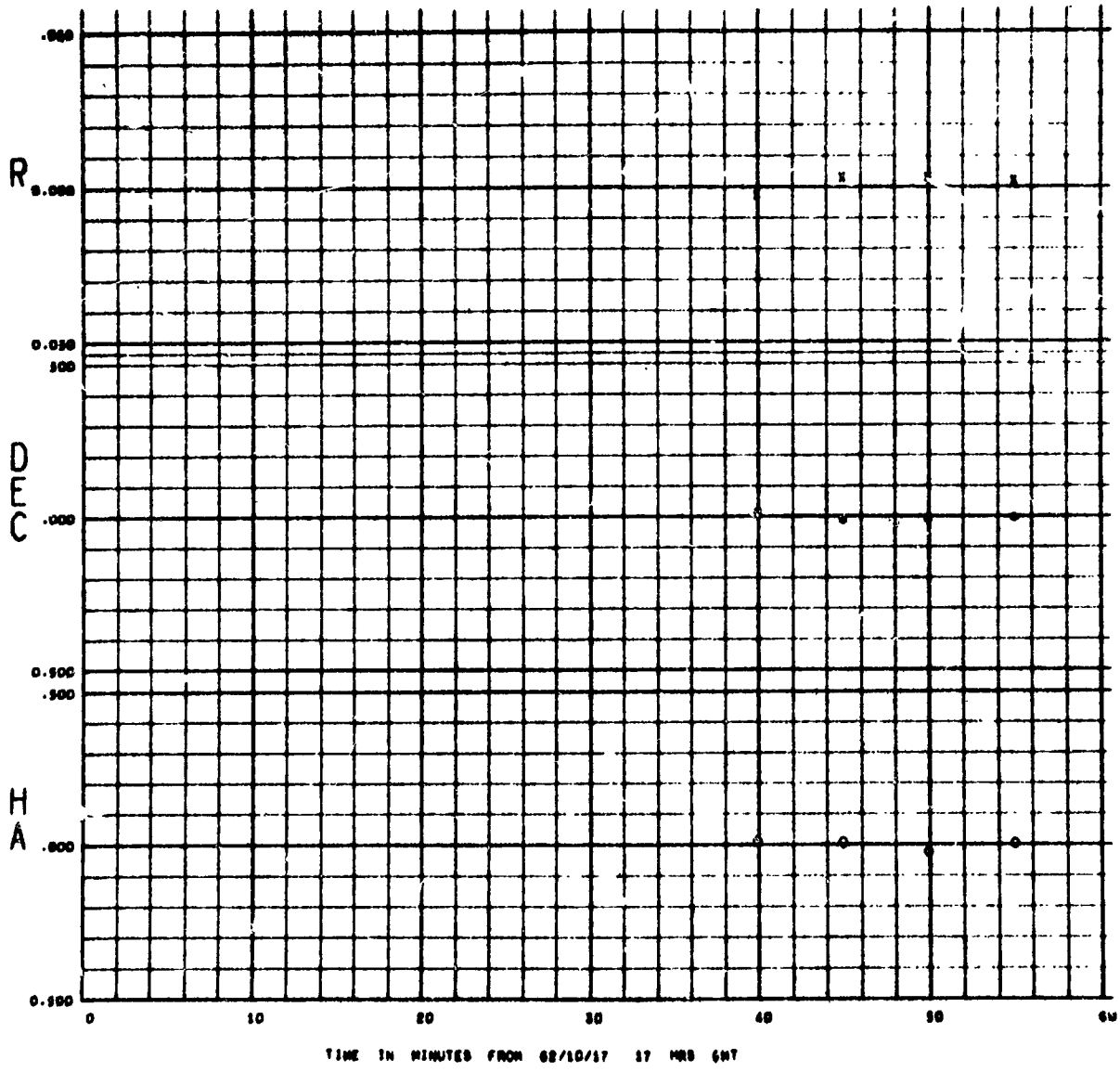

STATION 04 RESIDUALS PASS NUMBER 000000

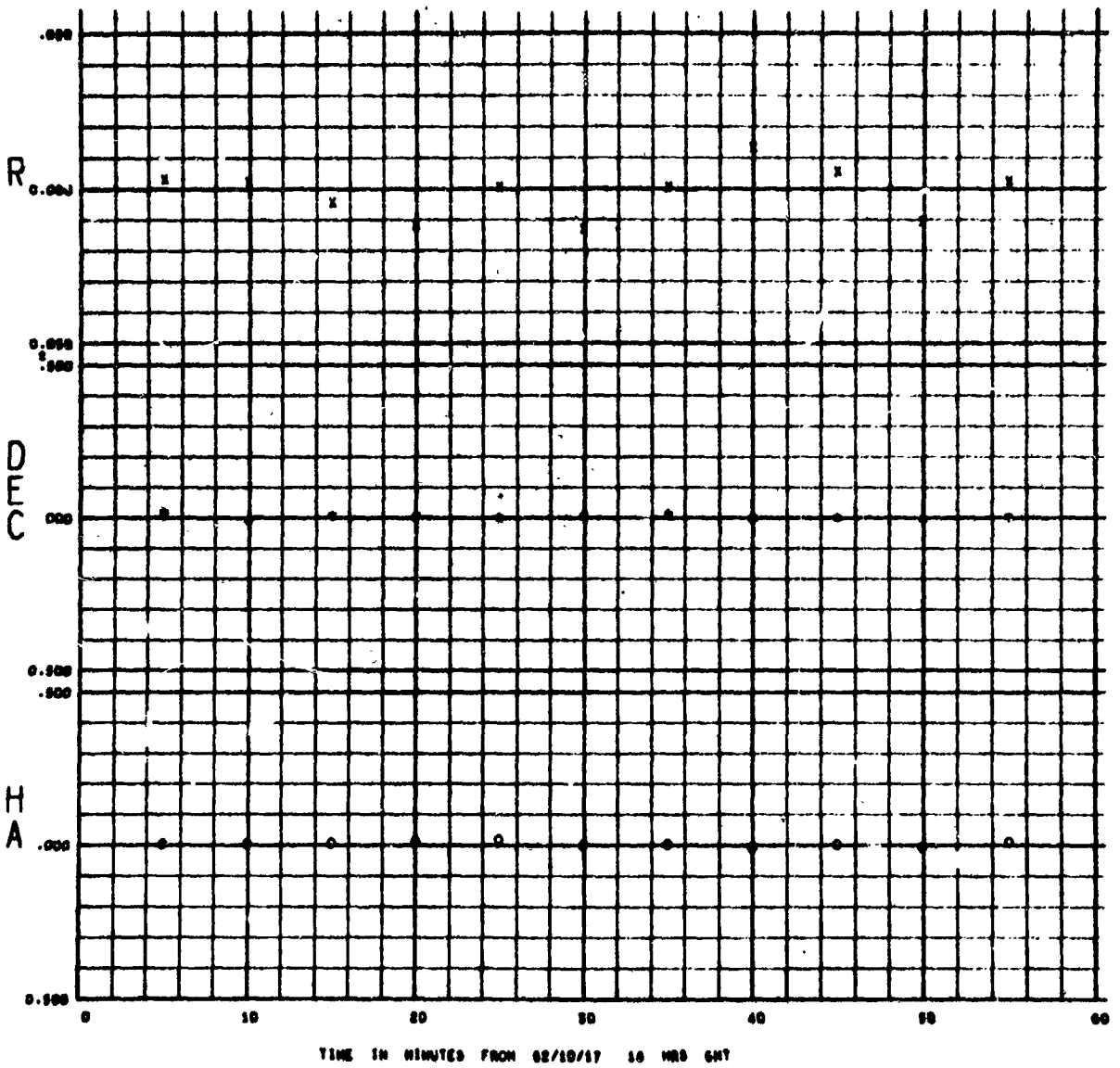

STATION 04 RESIDUALS PASS NUMBER 000000

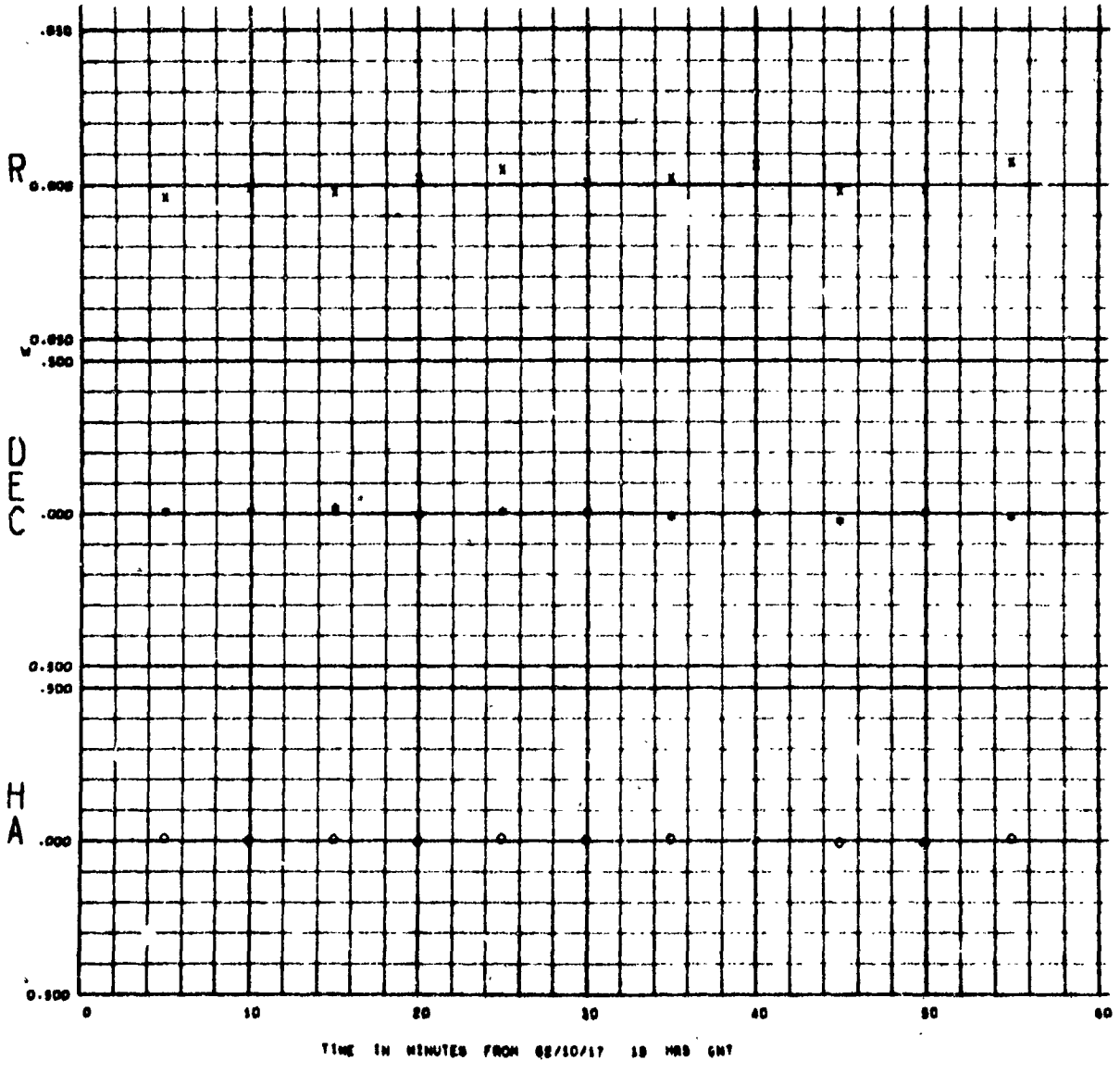

STATION 04 RESIDUALS PASS NUMBER 000000

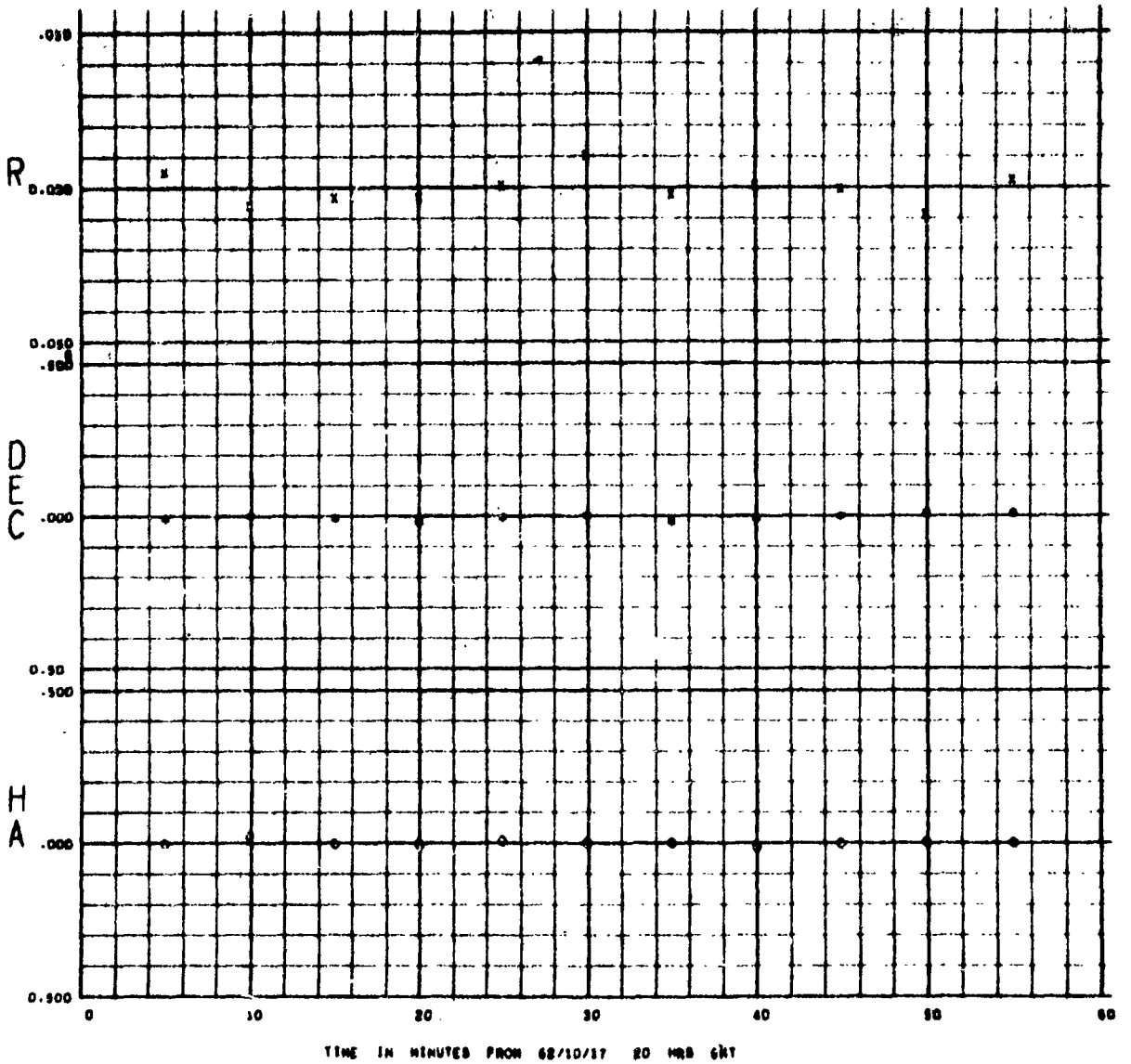

STATION 04 RESIDUALS PASS NUMBER 000000

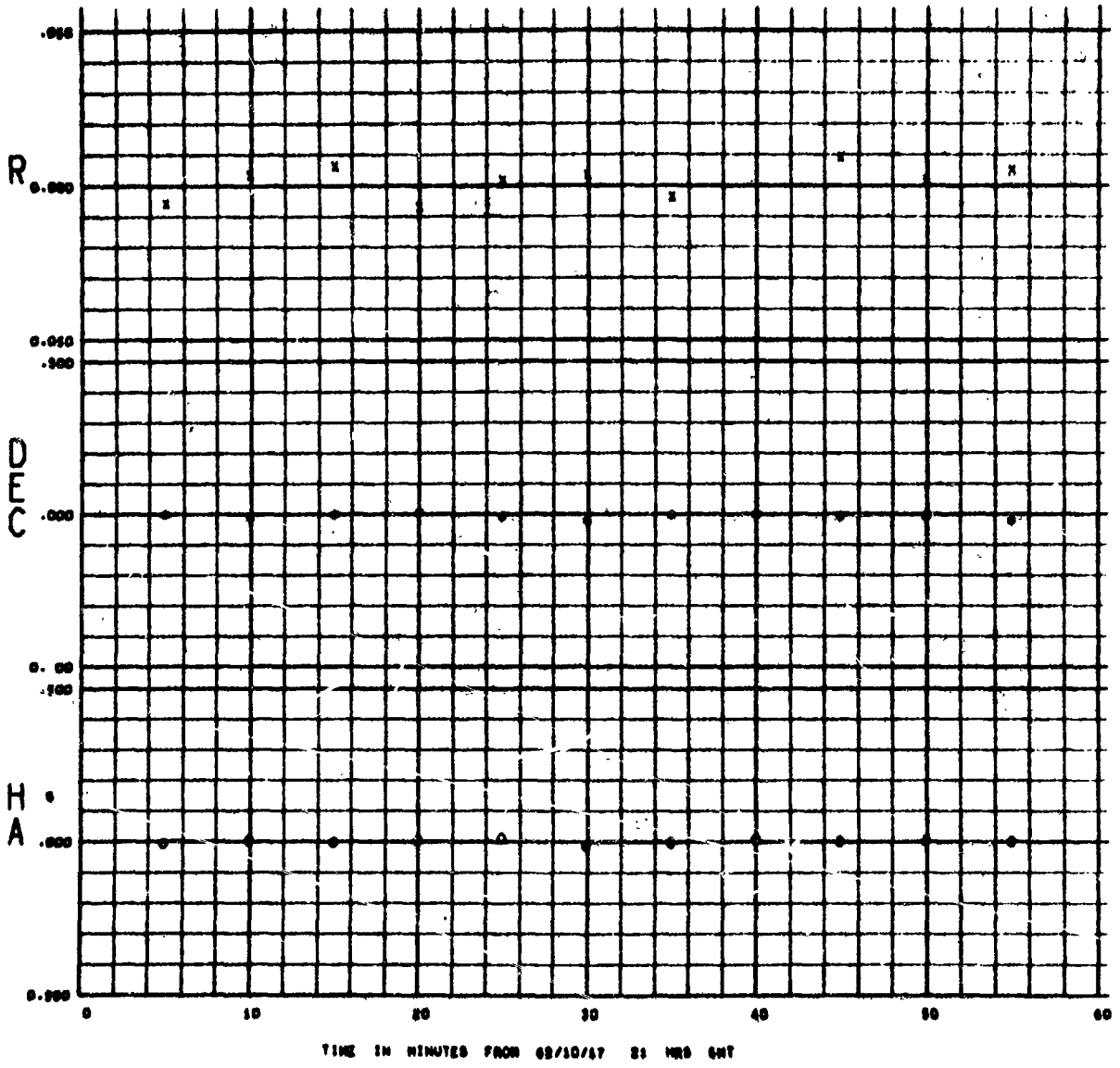

STATION 04 RESIDUALS PASS NUMBER 000000

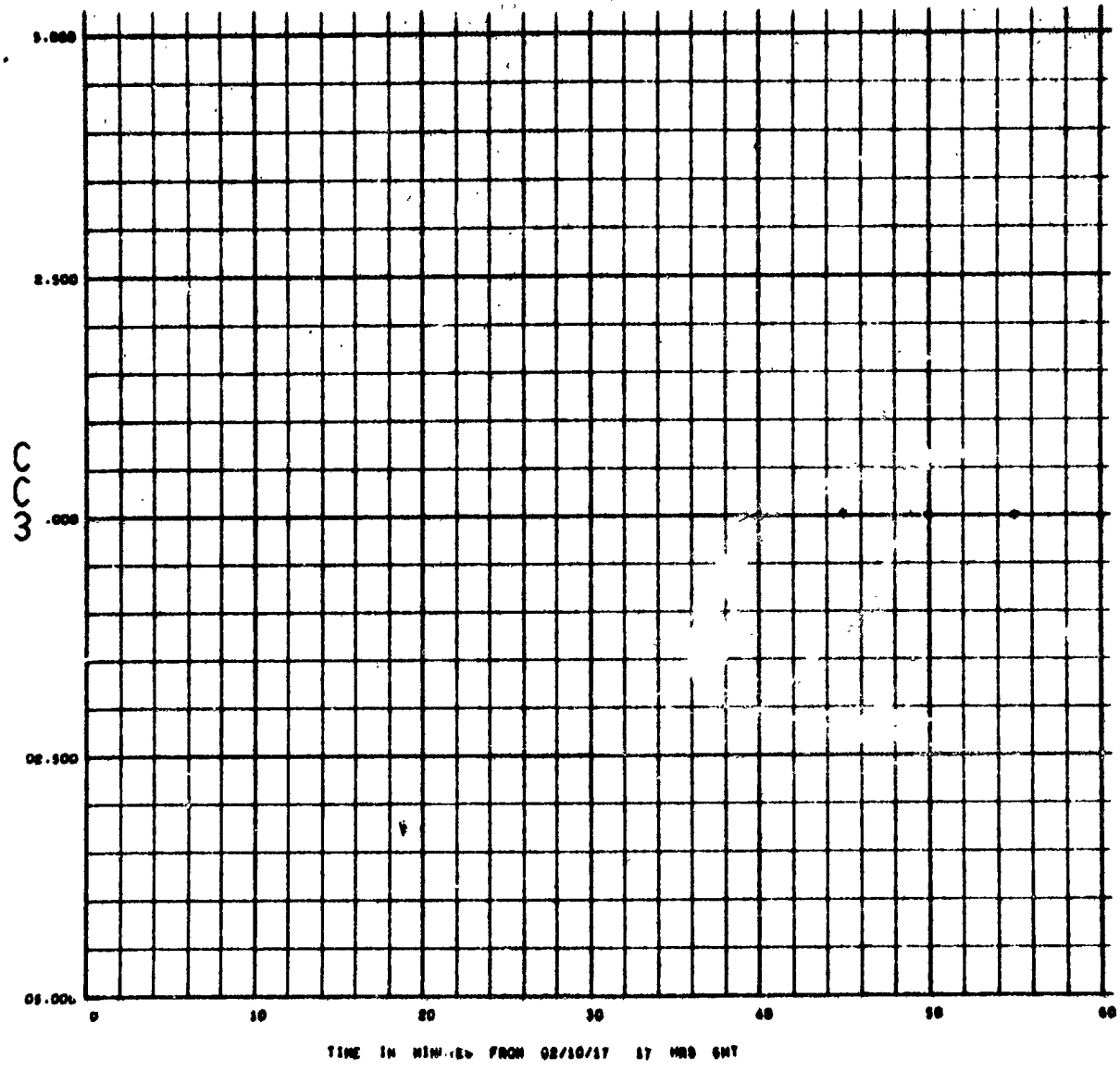

STATION 04 RESIDUALS PASS NUMBER 000000

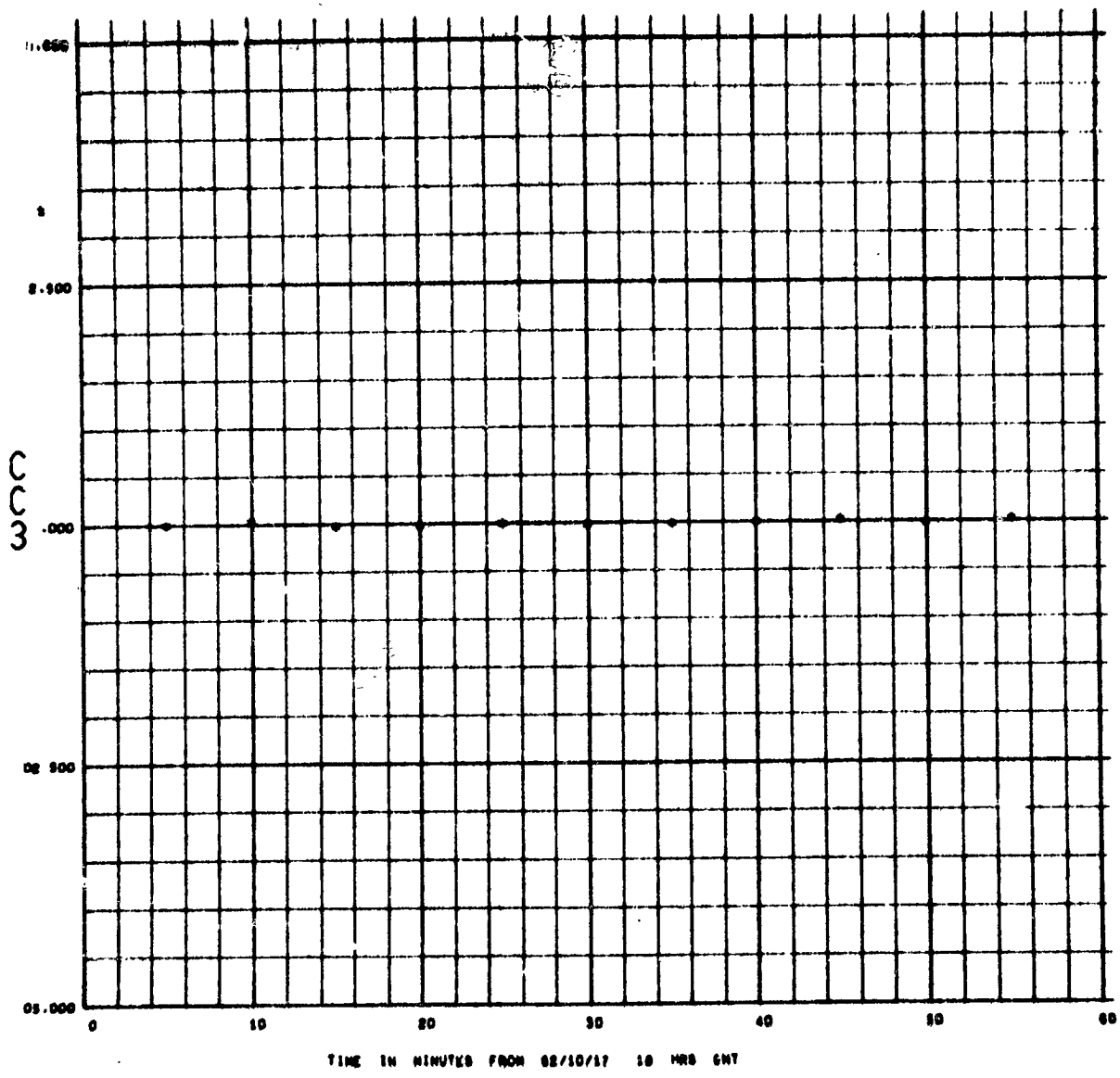

STATION 04 RESIDUALS PASS NUMBER 000000

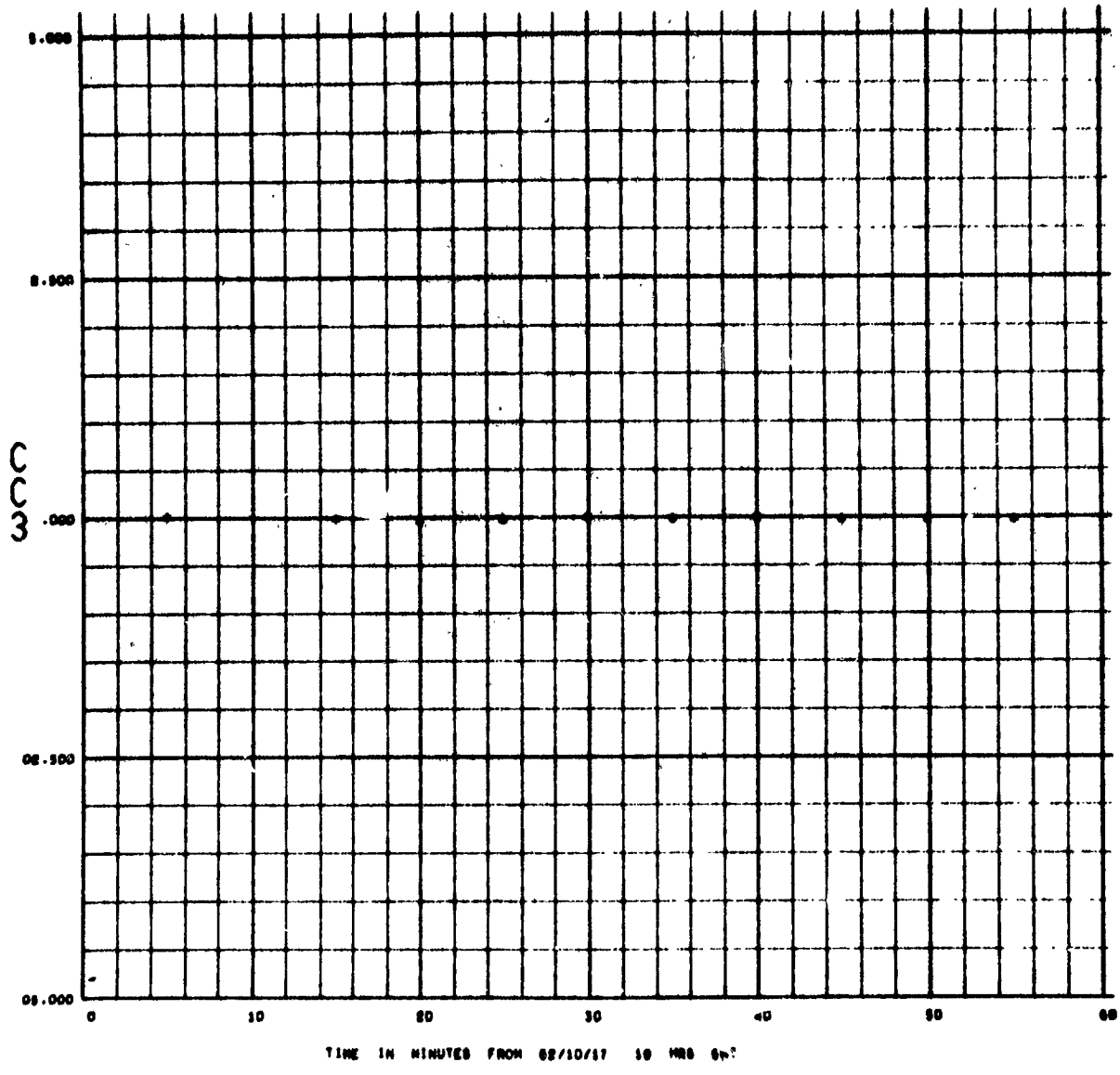

STATION 04 RESIDUALS PASS NUMBER 000000

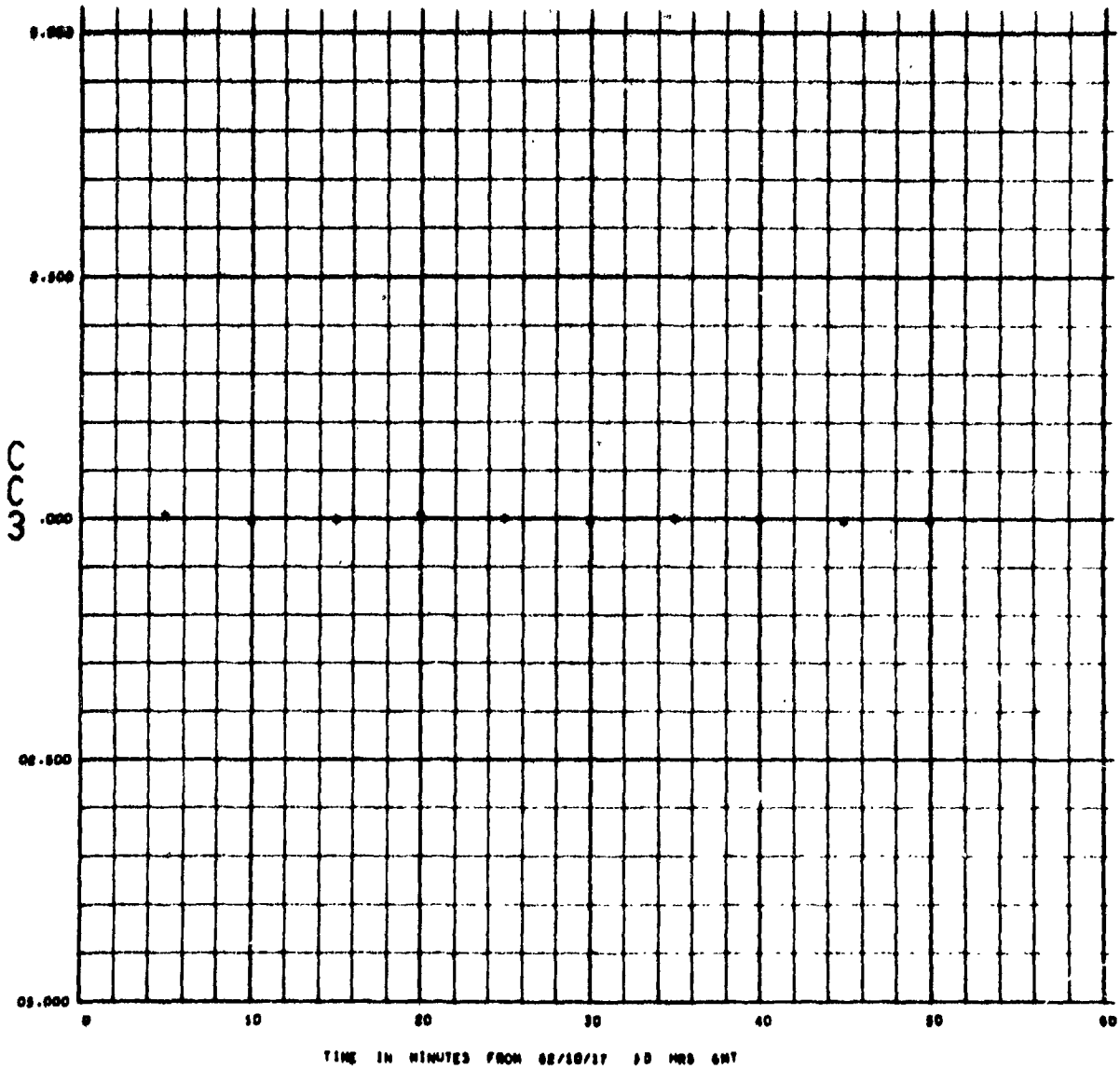

STATION 04 RESIDUALS PASS NUMBER 000000

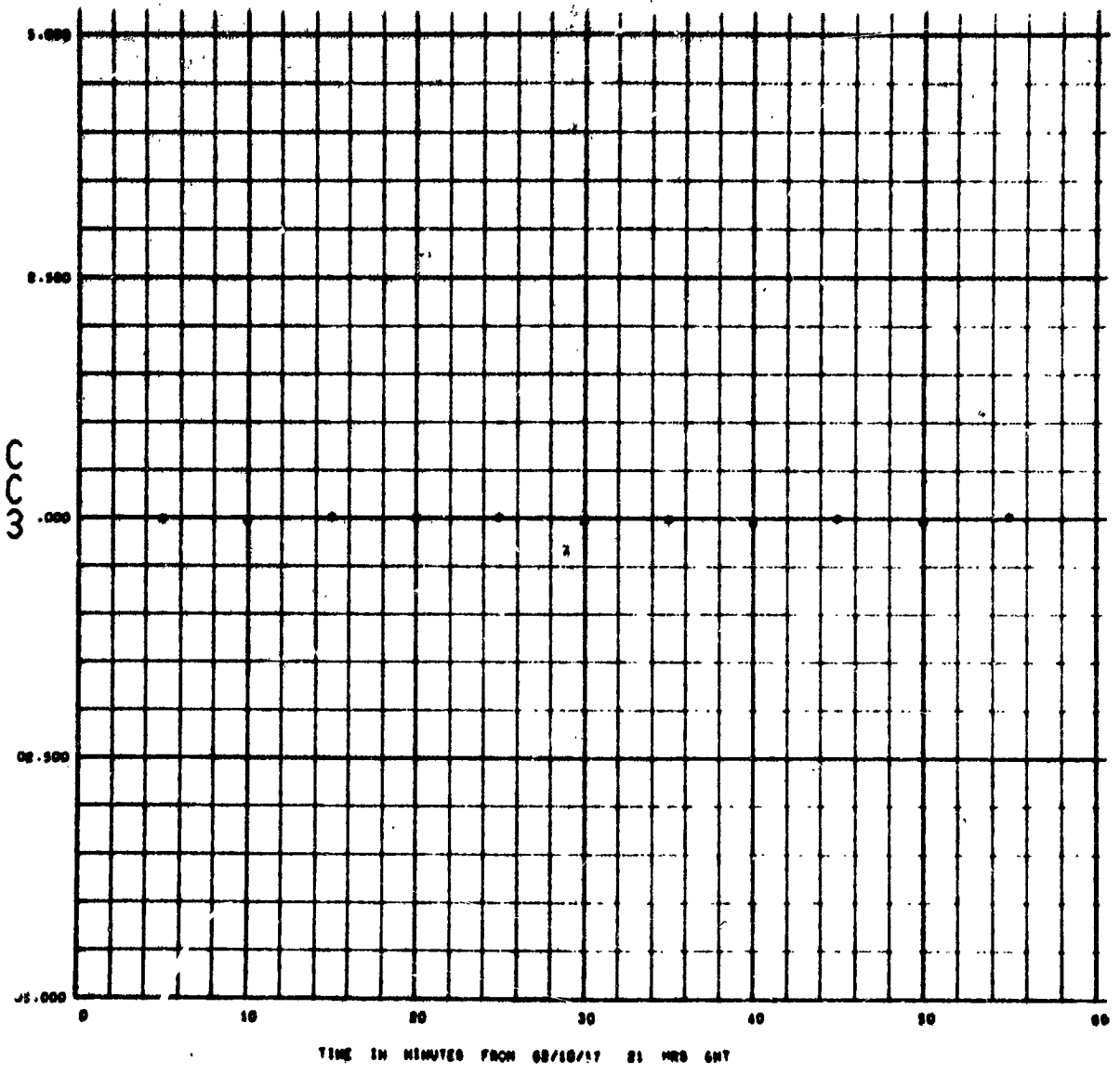

STATION 04 RESIDUALS PASS NUMBER 000000

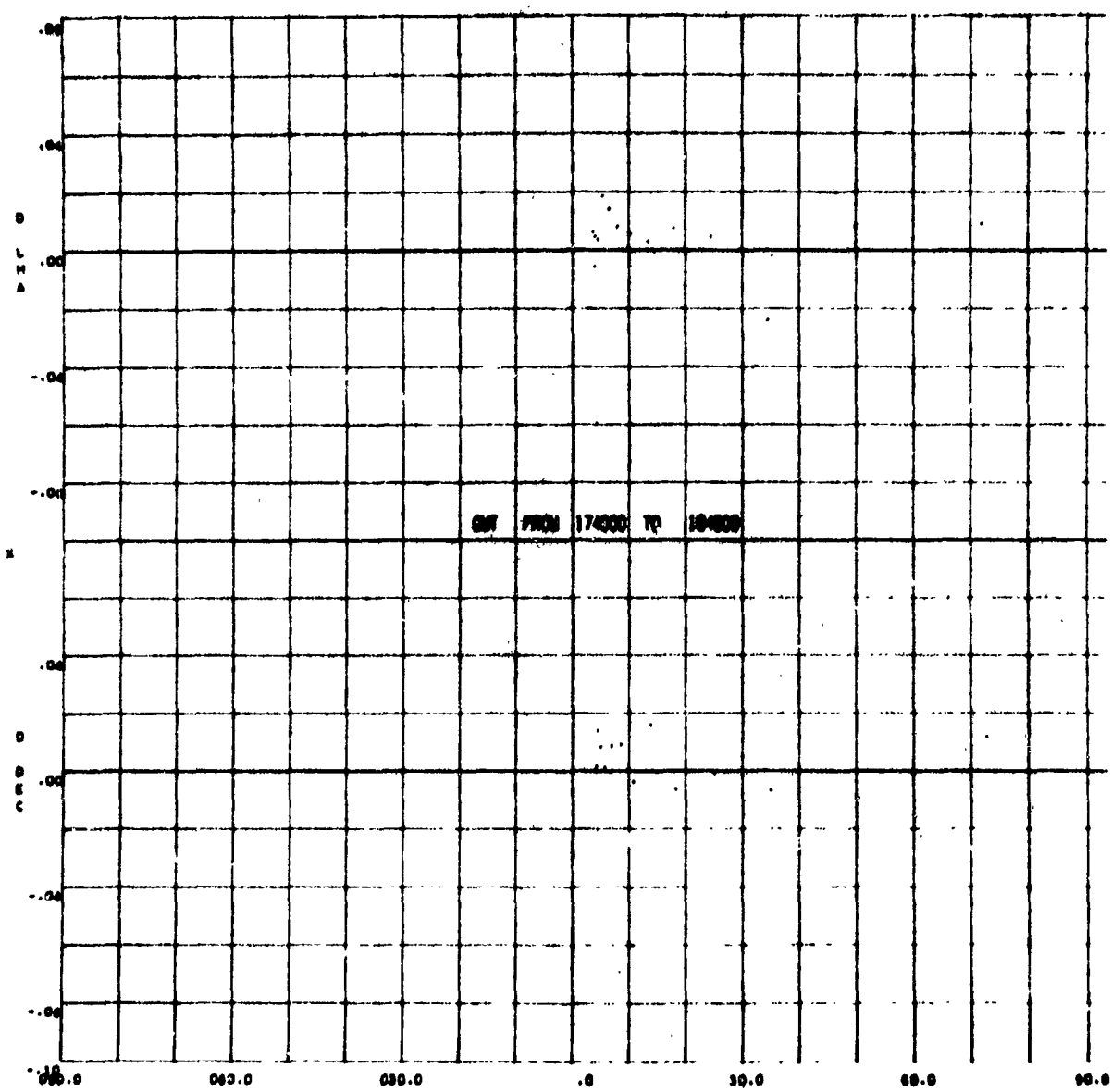

STATION 04 RESIDUALS PASS NUMBER 000000

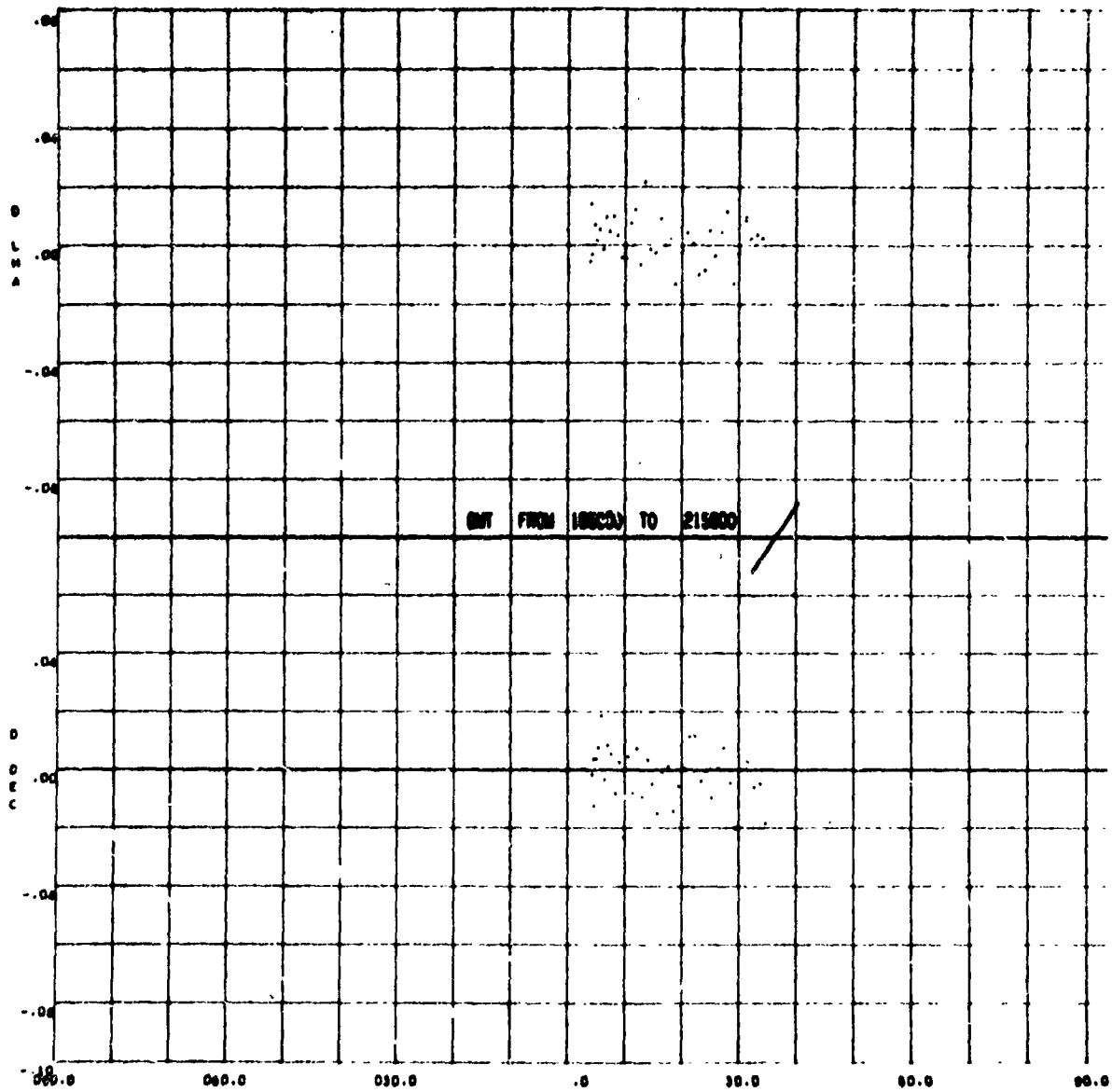

STATION 04 RESIDUALS PASS NUMBER 000000

APPENDIX C. Operation of the ODP

The following 7094 console sense switches, sense lights, keys, and tape units are applicable to ODP operation:

Sense Switches	Down	Up
3	Interrupt ODP-dump on BO	No interrupt
5	Read cards on-line	Read cards from A2
6	Print trajectory information on-line	No trajectory print on-line

Sense Lights	On	Off
1	Operational mode (SS5 up)	Utility mode (SL 2 off)
2	Operational mode-powered flight predictions only	Utility mode (SL 1 off)

Function Keys

1	Read cards at end of iteration
2	Write simulated data tape
4	Map covariance matrix to input times
5	Map covariance matrix to encounter, then read cards
6	Reject bad data points
8	Do predictions without rewriting probe ephemeris, then read cards
9	Punch simulated data for TDEP
12	Punch predictions
13	Do predictions
14	List data statistics
15	Plot angle residuals vs angles
16	List residuals
17	Plot residuals vs time
28	Print encounter statistics on-line
29	Print mapped matrices on-line
30	Print rejected data on-line
31	Print data statistics on-line
32	Print residuals on-line
33	Print computed matrices on-line
34	Print input matrices on-line
35	Print solution vector on-line

Tape Units

A1	JPL Fortran II system – used if error dump is taken
A2	Card input tape if SS5 up
A3	Printed output tape
A4	Scratch tape – sorting
A5	Output tape for matrix manipulation program
A6	Scratch tape if SS5 down – sorting
A8	JPL planetary ephemeris tape
A9	Scratch tape – common storage dump
B0	Program interrupt dump tape
B2	Scratch tape – sorting
B4	Scratch tape – sorting
B5	Scratch tape – residual
B6	ODP program tape
B7	Data tape (TDEP output or ODP simulation)
B9	Scratch tape – probe ephemeris

A job may be run on the tape ODP in the on-line utility, production utility, or operational modes. The following sequence should be observed:

On-line Utility Mode

1. Mount required tapes.

2. Depress sense switch 5.

3. Depress applicable keys – normal settings are

   1, 6, 14, 16, 31, 35 for orbit determination and residual output

   1, 12, 13 for pointing predictions

   5, 28 for mapping to encounter

4. Ready card reader with input deck preceded by LOAD B6 card.

5. Depress LOAD CARDS button on console.

6. If key 1 is down, card reader will select between iterations.

7. When desired operations are complete, as evident by the on-line printout, print output tape A3 on 1401.

Production Utility Mode

1. Fill out pink job request card – include required tapes.

2. Follow job card by deck consisting of:

   a. Job ID card (Fortran II system)

   b. * XEQ Card

   c. B6 loader (two cards)

   d. * DATA card

   e. ODP data deck – same as above but must include OFFLINE CONTROL for key settings. KEY (1) unnecessary.

   f. End file card

3. Submit deck as standard 7094 job.

Operational Mode

1. Mount required tapes.

2. Raise all sense switches and keys.

3. ODP will be called by TDEP (or powered flight program for predictions), with appropriate sense light on.

4. When card reader selects, input cards containing epoch, initial conditions, rejection sigmas, and transmitter frequencies only. (The epoch and initial conditions are transmitted in core by the powered flight program).

5. Card reader will select between iterations for additional input of rejection sigmas.

6. After convergence, program will map to encounter.

7. After mapping, card reader will select for additional frequency information for predictions.

8. After predictions are printed, ODP will call trajectory fine print program.

Nonstandard events during the operation of the ODP are denoted by error messages printed on-line. The following messages signify unrecoverable errors and require a restart of the program.

B9 REDUNDANCY WHEN {WRITING / READING} DBH07 TAPE.

Change scratch tape B9 and/or clean tape read-write heads.

1st TIME IN DBH07 GREATER THAN LOOKUP ARGUMENT.

Program has tried to process data before epoch.

LAST TIME IN DBH07 LESS THAN LOOKUP ARGUMENT

Normally a machine error.

INJECTION CONDITION = 0.

Correct input deck.

POINTING TIME LESS THAN EPOCH + R/C.

Correct input deck so that light time correction will not adjust input time before epoch.

ERROR RETURN FROM MARK.

Trajectory link has tried to integrate to a time before epoch.

EPHEMERIS ERROR AT LOCATION XXXXX.

Time not available on planetary ephemeris tape, or non-recoverable redundancy on this tape (A8).

PROBE IMPACTED EARTH.

Normally an error in the injection conditions.

The following comments signify an error condition, but the program will continue to operate:

INV COV MATRIX ESTIMATED PARAMETERS NOT N * N.

COV MATRIX CONSIDERED PARAMETERS NOT M * M.

Possibly an input error, but also occurs when a matrix has been intentionally omitted.

WEIGHT (data type) FOR STATION (name) = 0.

Normally an error, but program will continue by depressing console START.

READ ERROR. CHECK DECK, PLACE IN READER, HIT START.

The second card fed out of the reader contains an error. The program expects a corrected card, but a complete ODP restart is not necessary.

REDUNDANCY ON TAPE XXXX NOTED BY KINE.

A record of residuals or predictions will not appear in the listing, or a record of tracking data will not be processed.

VARIABLE NO. XX REJECTED BY DIAGONAL TEST.

A row and column deleted by matrix inversion.

Certain messages are printed as an aid to the operator:

j ITERATIONS COMPLETE.

ITERATION *j* GENERATED *k* PLOTS.

CONTENTS OF TAPE B7 WILL BE DESTROYED. PRESS START TO CONTINUE.

TARGET (MOON, MARS, VENUS).

OPERATIONAL MODE.

READ PREDICT DATA, CLEAR KEY 8 WITH LAST INPUT.

CURRENT ITERATION BLEW UP. PROGRAM WILL USE OLD Q.

(Operational mode only – program reverts to previous solution to compute predictions)

APPENDIX D. ODP Subroutines

Name	Description	Octal Length
ABDD	Obtain dot product	27
ADD	Adds in double precision	31
AIME	Read sort scratch tapes	314
ANGPLT	Writes residual vs angle plots for SC-4020	600
AQUI	Prints and punches predicts and drive tape	740
ARSIN	Calculate ARCSIN, ARCCOS in degrees	144
ARTAN	Calculate ARCTAN in degrees	102
BAD	Print rejected data	103
BEER	Initialize core storage	70
BIBCD	Converts binary number to BCD equivalent	55
BILL	Write sort scratch tapes	4161
BMATRX	Computes partials of accelerations with respect to physical constants	1252
CALL	Logical control to obtain residuals and partials	616
CATS	Calculate station location partials	614
CLOCK	Sense printer clock	60
COEF	Calculate doppler coefficients	356
COL	Calculate g term in weighting scheme	370
COMAP	Control program for mapping link	241
COMIMP	Computes matrix for mapping forward	1320
CORE	Control program for trajectory link	353
COROP	Calculate optical refraction corrections	170
CORR	Calculate refraction and vertical corrections	274
CXPLOT	Writes SC-4020 compatible format for plots	3320
DATAPE	Sorts simulated data on time, writes on scratch tape	260
DAYS	Convert seconds to days	31
DECOD	Decode weight codeword	37
DIAG	Obtains the square root of diagonal of a matrix	103
DICOS	Calculate partial coefficients from angles	170

Name	Description	Octal Length
DMOD	Double precision modular package	120
DOPLR	Calculate data types	1163
DOUT	Print, punch routine	1662
ENDIT	Obtain solutions for parameters	1522
ERROR	Print error messages	350
EXP(3	Calculate exponential	36
FILL	Write residual tape	1040
FILT	Write simulated data tape	1050
FIRST	Control program for initialization link	127
FIT	Control program for data processing link	71
FIXT	Convert Greenwich times	310
FORM	Form phi and theta vectors. Accumulate J matrix	735
GAMAT	Integrate physical constants acceleration partials	562
GERPU	Punch DM/DQ matrix for matrix manipulation program	55
GERTA	Write phi vectors on tape for matrix manipulation program	205
GHADP	Calculate Greenwich hour angle	307
G1G2	Computes gravitational coefficients	255
IMPAR	Calculate impact time partials	174
INSPC	Invert U matrix	305
INTRI	Read and interpolate planetary ephemerides	2216
IXTAB	Look up transmitter ID and frequency	125
JUDY	Punch simulated data	1027
KINE	Read data tape	326
LOG	Calculate natural logarithm	67
LOOKUP	Reads probe ephemeris, does 6-point interpolation	1320
MAMUL	Performs matrix multiplication	124
MAXIM	Determines period which probe ephemeris must cover	336
MOCT	Obtain latest observed occultation/impact time	106
MONRED	Leads trajectory program after convergence	61
ND2F	Random number generator from share subroutine	50

Name	Description	Octal Length
NOMNL	Set nominal values	543
NORMAY	Normalizes a square matrix on diagonal terms	247
NOUT	Print inversion errors	53
OBTOX	Calculate intermediate data partials	260
OCIM	Calculate occultation/impact times	1145
OCPAR	Calculate occultation time partials	516
ODATA	Read data cards	2053
ODINP	Convert input to binary	2005
OFFSYS	Interrupt ODP	1176
OPERA	Set nominal values, operational mode	142
OPKEY	Set keys for operational mode	37
ORBEQ	Rotate encounter parameters to target equatorial plane	167
OZ	Control program for encounter calculations	160
PARAM	Print encounter statistics	1051
PERNOD	Calculate data statistics	454
PM360	Adjust angle residuals by 360	45
PNUT	Obtain precession, nutation matrices	354
POINT	Sort predicts on time, writes on scratch tape	532
PRAMS	Stores mapping matrix for print in next link	672
PREDA	Control program for predict-data simulation link	140
PRIM	Prints and in some cases punches matrices as requested	1154
PRINQ	Prints solution vector	354
PRINT	Control program for printing link	160
QUEST	Checks input times for light time correction	163
QUIZ	Test keys	25
RATES	Calculate range, range rate	672
RCAL	Computes coefficients for RE, AU partials	204
RCOM	Computes coefficients for KM, MM, MV, MJ partials	131
READS	Control program for data input link	210
REJEC	Construct table for rejected points	55

Name	Description	Octal Length
RESID	Control program for residual output link	137
RESP	Writes residual vs time plots for SC-4020	1622
REVRT	Save previous solution in event of error	205
ROT	Rotate ephemerides	130
ROTAX	Rotates true of date to 1950, DP, positive and velocity	447
RSIG	Computes summation for AU partial	64
SETUP	Sets up data required by trajectory link	111
SIN	Calculate sin, cos, degree argument	142
SORT	Control program for station sort of predicts	173
SPHX	Convert spherical to cartesian	323
SQRT	Calculate square root	60
STORE	Stores data each end-of-step for probe ephemeris	145
STPREG	Invert matrix	1650
TAPE	Writes probe ephemeris tape	672
THARP	Logical control to sort residuals and predicts	622
TIMER	Obtain light time correction	132
TNORM	Normalizes a 6 × 6 matrix on diagonal terms	247
TRMAN	Saves time of closest approach	10
UMAT	Calculate encounter statistics	2500
VEC	Obtain cross product	17
WAIT	Obtain a priori weights	323
WASH	Print phi, theta vectors	221
XLR8	Computes accelerations	343
(DFAD)	Double precision arithmetic package	120

REFERENCES

1. Holzman, R. E., and Coltharp, C. D., *Tracking Data Editing Program for the IBM 7094 Computer*, Technical Memorandum No. 33-170, Jet Propulsion Laboratory, Pasadena, (to be published).

2. Holdridge, D. B., *Space Trajectories Program for the IBM 7090 Computer*, Technical Report No. 32-223, Jet Propulsion Laboratory, Pasadena, March 2, 1962.

3. Clarke, V. C., *Constants and Related Data Used in Trajectory Calculations at JPL*, Technical Report No. 32-273, Jet Propulsion Laboratory, Pasadena, May 1, 1962.

4. Hildebrand, F. B., *Introduction to Numerical Analysis*, McGraw-Hill, New York, 1956.

ACKNOWLEDGMENT

The authors gratefully acknowledge the support received from others at JPL in both analysis and programming. Especially significant were the contributions of J. Anderson, D. Cain, C. Coltharp, D. Holdridge, L. Laxdal, A. Rosenberg, J. Schoeni, A. Schoepke, W. Sjogren, and R. White.