N64-24846

Code 1 Cat 09

NASA CR-57008

36p.

RESEARCH AND DEVELOPMENT STUDY OF THE SILVER-CADMIUM COUPLE FOR SPACE APPLICATION

By Allen Charkey and G. A. Dalin

Third Quarterly Progress Report

1 January 1964 to 31 March 1964

This report is reproduced photographically
from copy supplied by the contractor.

Prepared under Contract No. NAS 5-3452 by

YARDNEY ELECTRIC CORPORATION

New York, New York

Goddard Space Flight Center

Greenbelt, Maryland

NATIONAL AERONAUTICS AND SPACE ADMINISTRATION

OTS PRICE

XEROX $ 3.60 ph

MICROFILM $

TABLE OF CONTENTS

	Page No.
TABLE OF CONTENTS	1
PURPOSE	2
ABSTRACT	3
BODY OF REPORT	4
1. Phase 1	4
1.1 Positive Plate Tests	4
1.2 Negative Plate Tests	4
1.3 Cell Tests	5
1.4 Investigation of Changes of Properties in Separator Materials	7
2. Phase 2	8
2.1 Gas Recombination in Cells	8
2.2 Trickle Charging	10
2.3 Recombination on Single Plates	11
3. Phase 3	11
4. Phase 4	12
PROGRAM FOR NEXT QUARTER	14

PURPOSE

The purpose of this contract is to provide an insight into the basic problems associated with the operation of the sealed silver oxide-cadmium system, under satellite cycling conditions. The information will then be used to design and construct an improved 30-cell battery.

ABSTRACT

24846

The cells on both long and short orbit regimes (as 5 cell batteries), have completed a series of ten deep cycles at RT, -15°C and 50°C. The data show the negative electrode is limiting at lower temperatures. To date, the cells on short orbit (100 min) regime have completed 240 cycles at 35% depth of discharge; those on the 24 hour orbit have completed 15 cycles. ~~Author~~

A few of the cells on the short orbit have become negative limiting on charge and are evolving hydrogen. Because the cells are different in design and vary in capacity, the lower capacity cells tend to overcharge on each cycle and eventually produce hydrogen. To minimize this cell "unbalance", a special voltage scanning device is being constructed.

A 50°C stand test to correlate separator attack by silver with change in composition and concentration of KOH has been running for one month. K_2CO_3 content as well as soluble organics are increasing at a moderate rate.

Special instrumentation which includes a rotating disc electrode apparatus for the investigation of the mechanism of gas recombination has been constructed. Measurements of recombination rates in our sealed silver-cadmium cells produced for the first time a direct correlation between quantity of electrolyte and rate of recombination. It has also been found that soluble organic products from the separator decrease the oxygen recombination rate.

A new type of partially waterproofed cadmium electrode improved the oxygen recombination reaction.

Data obtained from cells on constant potential charge for ten weeks have shown that the addition of 1% lead to standard silver plates increases argentic and total cell capacity. The data also show that increasing the positive grid conductivity does not increase AgO capacity.

Cells containing various means for improving argentous operation have completed 15 cycles with up to 75% argentous utilization on long orbit; but only 30% argentous efficiency can be obtained on the short orbit. Low concentration electrolyte (25%) is also helpful in extending the Ag_2O plateau. Author

BODY OF THE REPORT

1. Phase 1

1.1 Positive Plate Tests

Recent experiments run in our laboratory have shown that after 10 cycles the apparent change of surface area of the silver electrode does not have a significant effect on either cell capacity or length of the argentous oxide plateau. However, during initial cycling, silver electrodes made from fine grain powder of about 0.9 m^2/g does exhibit a longer argentous oxide level than electrodes made from powder which has a surface area of .25 m^2/g, as measured by double layer capacitance.

Starting with a powder which initially had a surface of .32 m^2/g, it was found that the rate of change of the surface area was dependent to some extent on electrolyte concentration (see Figure 1), with the greatest increase occurring in 31% KOH on both orbital regimes, during the first 10 cycles.

It can also be seen from Figure 1 that the rate of change of surface area is independent of the charge rate at each electrolyte concentration tested. Note that the charge rate on the 100 minute regime is about 12 times higher than on the 24 hour orbital regime.

In discussing the large differences in surface areas obtained between uncycled and cycled plates, cognizance of the fact must be taken that these differences do not affect performance. The results by DLC show that the surface area had increased from .5 m^2/g on "green" plates to as high as 21 m^2/g after 400 cycles. When surface area was measured by BET method, on uncycled electrodes the results showed agreement with the DLC technique. However, when a cycled plate was measured by BET, the surface area was only 0.9 m^2/g. These differences cannot be explained at present. The investigation is continuing to establish why the differences exist. The reproducibility of both methods is being tested; also silver electrodes have been submitted for electron and microscope analysis, the results are now being evaluated.

1.2 Negative Plate Tests

The emphasis during this quarter has been on investigating various methods of improving negative electrode efficiency at low temperature and increasing the utilization of the active material.

During the last report period, it was found that electroplated cadmium electrodes exhibit performance which is superior to electrodes made by mold pressing CdO powder. The fabrication process involves the deposition of cadmium sponge on a nickel exmet collector from a $CdSO_4/H_2SO_4$ plating bath, as described by M. Chub in Canadian Patent #672,675. The plate obtained has a very high energy density, is easy to fabricate on a continuous basis, and does not react with oxygen when extracted from the plating bath as does cadmium prepared from an alkaline bath. Early cycle data presented in the last progress report showed a sizable increase in performance over our standard plates prepared from pressed cadmium oxide. These electrodes have now been fabricated into a sealed cell for further testing under actual satellite conditions. The design is such that the cadmium to silver ratio has been reduced from 1.5:1 to 1.0:1.0 with no degradation in performance, at room temperature.

A second approach being evaluated is the use of small concentrations of indium alloyed with cadmium; its use was reported by A. Fleischer to increase the capacity and durability of the electrode.

Plates were made from cadmium powder which was prepared by soaking CdO in a solution containing $Cd(NO_3)_2$ and 1% by weight In as $In(NO_3)_3$. The mixture was then reduced in a hydrogen furnace at 300°C to form a Cd-In alloy.

The plates were fabricated into a cell which was negative limiting (2 positives and 1 negative) and then cycled several times. The preliminary results given in Figure 2 show 85% of theoretical utilization at a current density of 50 ma/in^2. Tests are also being conducted to find a more practical method of incorporating indium to cadmium. One method being studied is the simultaneous electrodeposition of both metals from the type bath described above. The design of a series of sealed cells with indium has also begun. The possibility of using inert expanders to prevent agglomeration and aging of the negative with cycling is being considered. Additives under study are the hydrolyzed derivatives of ligno-sulfonic and stearic acid which other investigators have found promising.

An investigation of surface area and structure changes of the negatives has been started, with special attention being paid to pore size, particle size, and formation of passivating species of cadmium. These changes will be observed by imposing cathodic and anodic transients on the electrodes.

1.3 Cell Tests

Forty-six cells in all have been constructed and subjected to 10 deep cycles at temperatures of -15°C RT, and 50°C; the current densities corresponded to those of the 100 min and 24 hour orbital regimes. Cells 1-14 include positive plate and electrolyte variables, and cells 13-73 comprise negative plate, electrolyte and separator variables.

The data in Tables I and II show that the cells are performing quite poorly at low temperature; reference electrode measurements indicate that the negative electrode is limiting. Work done previously by Eagle Picher (Silver Cadmium Battery Development NASA Final Report June 1962) has shown that a cadmium to silver ratio of at least 2.5:1 is needed to maintain cell capacity at -15°C. The ratio used in our present design is 1.5:1.

Comparing the results in Tables I and II (long and short orbit respectively), it is seen that the short orbit cells are not performing as well as those on long orbit regime; the use of a 4 hour charge rate accounts for the poorer capacity.

After 10 deep cycles the cells on 100 minute orbit regime could not function properly as batteries when placed on cycling at 35% depth of discharge. It is thought that the poor battery performance was caused by the unbalance of low capacity cells which inhibited the cycling. To improve capacities, the cells were subjected to a special regime. They were first given 84 shallow cycles at 25% depth of discharge where the charge was at half the current density of the required 100 minute orbit. Second, the cells were given 2 deep cycles, recharging at 5 ma/in^2 with the pressure valve open until the negative electrode started gassing. The results presented in Table II show that the deep cycles greatly improved the capacities, and minimized cell unbalance. To date, the cells (cycling as 5-cell batteries) have completed 240 cycles at 35% depth of discharge.

Seven of the short orbit cells have developed high pressures during cycling; one cell exploded and the other six must be vented periodically to prevent rupturing. Analyses of the cell gases are shown in Table III. Charge voltages observed at time of the analyses indicate that the negative electrodes were limiting. Although the cells initially contained an excess of CdO, the surplus material now appears electrochemically unavailable. It seems likely that the soluble products resulting from separator degradation formed a chemically passive compound with cadmium (possibly $CdCO_3$). Cell 8 which showed the highest concentration of hydrogen will be dissected, and the negative plates will be chemically analyzed for Cd, $Cd(OH)_2$, and $CdCO_3$. An investigation to determine how silver-cadmium cells perform in saturated K_2CO_3 electrolyte has also been started.

An automatic scanning device near completion will prevent cell overcharge and reverse discharge by removing cells from the circuit when their pre-set voltage is reached.

The remaining cells on the short orbit are performing satisfactorily after 240 cycles and do not build up pressure during cycling; a deep cycle will be run every 500 cycles to determine cell capacity.

Referring now to the long orbit cells, they of course cycle much more slowly and have completed 15 cycles on orbital regime. They will receive a deep cycle at cycle 50.

1.4 Investigation of Changes in Properties of Separator Materials

A stand test was initiated to determine whether the extent of separator attack could be correlated with the organic salt content, measured as K_2CO_3. This attack is greatly accelerated at high temperatures. A measure of degradation is the determination of the concentration of free KOH and potassium salts (organic and inorganic). Previous data have shown that cell performance is considerably hindered when the free KOH concentration decreases. There is also evidence that gas recombination in sealed cells is decreased when large amounts of organic compounds accumulate in the electrolyte.

To study these reactions, six cells with various separator systems including PVA, C19, and films produced by Radiation Applications, Inc. (XPE 40-150) were assembled, sealed and given two formation cycles. They were then placed in charged state in an oven at 50°C. Results of the electrolyte analyses are shown in Table IV; the test has completed approximately 55 days. The data indicate that the K_2CO_3 concentration is increasing faster in the lower concentrations of KOH and is accelerated still faster by the presence of PVA separator material. The test will continue until the concentration of free KOH drops below 15%. The cells will then be dissected and the separators will be chemically analyzed for silver.

In another separator test, cells are being fabricated with one RAI XPE 40-50 positioned in the center of the main separators of either C19 or PVA. The objective here is to extend the life of a cell by using an inert film to interrupt silver trails and thus prevent shorting.

The cells will be deep cycled at rates equivalent to the 100 minute orbit at 50°C and will be left standing charged at regular daily intervals until shorting is observed.

2. Phase 2

2.1 Gas Recombination in Cells

The recombination rates achieved in nickel-cadmium cells are considerably higher than those attainable in standard silver-cadmium cells. An obvious factor favoring the nickel-cadmium cell is the access of oxygen to the impregnated cadmium electrode through the porous felt separators together with the absence of free electrolyte which impedes diffusion at the three phase boundary. A second factor which until now has not been considered is the effect of soluble organic separator products, in the electrolyte of silver-cadmium cells. This material produced by attack on the separator is absent from nickel-cadmium cells.

A series of experiments were run to obtain information concerning the above phenomena. The first test cell was assembled with nickel and cadmium electrodes obtained from a commercially available nickel-cadmium cell. The plates were first wrapped in a non-woven nylon (Pellon) separator and soaked in freshly prepared 38% KOH. The cell pack was then placed in a special chamber designed to measure the reaction rate of oxygen with cadmium.

The chamber was evacuated and filled with oxygen to a pressure of 40 psia. The pressure was then allowed to decay. The rate of oxygen recombination was calculated by plotting log $\frac{dP}{dt}$ versus log P.

A second cell was assembled which was similar in construction to the first, except that the negative electrodes were made from pressed CdO containing 5% silver; these electrodes had been electroformed prior to assembling the cell. The rate of oxygen recombination was determined as explained above.

Both cell packs were rebuilt with new separator material and soaked in electrolyte from a previously cycled silver-cadmium cell containing the KOH-soluble oxidized organic debris from the attacked separator. The cell packs were placed separately in the recombination chamber, which was then evacuated and filled with oxygen. The oxygen recombination rates were again determined and calculated in the same manner.

The results of the tests are shown in Figure 3. It should be noted here that the data plotted for each cell represents an average of four determinations of the oxygen pressure decay.

The results of the tests are important for they show that organic products and K_2CO_3 resulting from separator attack lower the recombination of oxygen with cadmium by a factor of 2.5. It can also be seen that an impregnated cadmium electrode is not significantly superior to our standard electroformed sponge cadmium electrode, which contains 5% metallic silver.

The mechanism by which organic materials lower the oxygen reaction with cadmium is not clearly understood at present. However, when viscosity measurements were made on an electrolyte sample containing separator debris the value obtained was about 25% higher than that of pure 38% KOH, the value of which is 3.6 cp at 25°C. The increase in viscosity may be partly responsible for the decrease in oxygen recombination rate.

Further study is necessary with respect to changes in viscosity with cycling, and the effect of organics in the electrolyte.

The next group of tests were conducted with actual sealed cells to determine how the quantity of KOH affects oxygen recombination. Two cells contained a "normal" quantity of electrolyte, (cells 40 and 58) and two cells had their free electrolyte removed (cells 43 and 59) following their formation cycle.

Cells 40 and 43 contained electroformed sponge cadmium negatives with 5% silver, and cells 58 and 59 contained impregnated cadmium in a nickel matrix. The four cells were wrapped (starting with the positive plate) with one turn of Pellon and 3 turns of PVA.

Data are presented in Figure 4. The results show that cells 43 and 59 exhibit a recombination rate which is roughly twice as fast as cells 40 and 58, the latter pair containing "free" electrolyte. Here again, however, the impregnated electrodes showed only a sightly higher recombination rate than our standard electroformed cadmium plates.

A supplementary test is being conducted to determine how cells will perform when free electrolyte is removed. Several cells containing no free electrolyte are presently being cycled on the 100 minute orbit regime. Initial cycle data show that the cell performances have decreased to 75% of the capacity available when an excess quantity of electrolyte was present. Further cycling will be necessary to determine how these cells will perform in a relatively dry condition. Cells with intermediate quantities of electrolyte will also be studied.

An investigation during this last quarter which focused on improving the recombination rates in sealed silver-cadmium cells has shown some promising results. In one series of cells the use of metallic additives in the negatives were studied. Cells containing 5, 10, 15, and 20% FR silver, along with one cell with 5% nickel were fabricated. The cells, all of which were sealed, were given three formation cycles and the rates of oxygen recombination were measured.

The data obtained are compiled in Figure 5. The results show that the cell with 5% carbonyl nickel exhibits a recombination rate which is about 1.25 times greater than the cell which has 5% silver in the negative. The data also show that increasing the percentage of silver in the negative does not appreciably increase the recombination rate with oxygen.

The use of inert materials such as paraffin wax and Teflon have been effective wet-proofing agents for fuel cell electrodes. These additives provide "gas leads" through which rapid diffusion and reaction occurs. Wet-proofed cadmium electrodes were fabricated using a technique similar to fuel cell electrode construction. A mixture of CdO and wet-proofing material was mold-pressed to a density of 2.8 g cadmium per cubic centimeter. The electrodes after three formation cycles were placed charged in the oxygen recombination chamber, with a normal quantity of electrolyte. The chamber was evacuated and filled with oxygen to a pressure of 35 psia. The rate of pressure decay is plotted in Figure 6. More than 100% improvement in recombination rate over standard plates with 5% silver was achieved.

Following these experiments with individual plates, two sealed cells were constructed; early cycle data show utilizations comparable to the control cell. After a series of evaluation deep cycles, the cells will be overhcarged at various current densities to determind the recombination rate at equilibrium pressure, and also to establish the maximum allowable current for continuous charging.

2.2 Trickle Charging

Four cells are being subjected to extended periods of trickle charging at 0.1 ma/in^2 (i.e., 150 days) to investigate the pressure decay after the initial pressure rise, (which was reported by NASA). To date the cells have completed 80 days of charging - see Figure 7. No evidence of pressure decay can be seen as yet. Cell 41 appears to be stabilizing however at about 45 psia. Two cells must be vented periodically to avoid explosion (cells 44 and 46). Chromatographic analysis of the gases after 63 days shows about 20% hydrogen present in all cells.

The reason that cell 41 is exhibiting the best recombination rate is not entirely understood. Cell 41 is reverse-wrapped; of the cells trickle-charged at NASA, those which were reverse-wrapped also were superior. Apparently, the porous nylon on the negative provides easier access for the gas to the plate. Additional cells with wrapped negatives will be placed on trickle charge to duplicate the previous tests.

2.3 Recombination Study on Single Electrodes

The mechanism of gas recombination on sheet and porous cadmium is under study in this phase of the program.

Work done during the last quarter has shown that the rates of diffusion of oxygen through the separator and the electrolyte are not the limiting steps in the reaction of oxygen with cadmium. A study of the reactions occurring on the surface of the cadmium electrode was therefore initiated.

To follow these reactions, the use of a rotating disc electrode of pure cadmium has been chosen. This type of experiment is being used to separate the rate of diffusion of oxygen through the electrolyte from the rate of reaction at the surface.

Special instrumentation which combines a rotating disc electrode with a polarograph has been built -- see Figures 8 and 9.

In referring to Figure 8 which is a drawing of the reaction cell components, the electrolyte contained in the reservoir is sparged with oxygen and introduced into the reaction chamber to a height just below the disc electrode. A polarograph wave is then obtained to determine the initial concentration of oxygen in the electrolyte. To discover how fast the dissolved oxygen is reacting with the cadmium, the electrode is completely submerged in the electrolyte. The electrode potential is established by means of a Wenking potentiostat, and the speed of rotation is set with an electronic control on the motor. Rotation is interrupted periodically for about 40 seconds to permit polarographic determination of the oxygen concentration. Reaction of oxygen during the interruption is negligible because the diffusion rate is low.

The first series of experiments will include measuring the rate of oxygen recombination as a function of the cadmium potential. As part of this study, electrolyte containing separator reaction products will be used. In addition, electrodes are being prepared for study with and without metallic additives.

3. Phase 3

3.1 Constant Potential Charging

The loss of argentic voltage as a result of prolonged constant potential charging is being investigated in this phase.

A series of four cells containing one positive and two negatives were subjected to constant potential charge for 10 weeks. The expanded metal grids vary in conductivity from cell to cell. One cell contains a 1% lead alloy in the silver.

After floating for ten weeks the cells were discharged at the six hour rate. The discharge curves are presented in Figure 10. The data show that the lead-alloyed silver plate delivered about 18% of its total capacity on the argentic level; its argentic capacity on cycle one was 25% of the total discharge. The addition of lead also increased the total silver capacity to approximately 80% of theoretical. Note that increasing the grid conductivity did not help to retain the argentic capacity.

It is thought, at present, that lead forms silver plumbate on the surface and in the lattice of the electrode during charge which decreases the plate resistance. In effect, it inhibits the conversion of metallic silver to argentic oxide during the extended overhcarge. (Ref. B.D. Cahan US Pat No. 3,017,448, Use of Pb compounds in the silver electrode).

To determine if the percentages of AgO, Ag_2O and Ag influence the reactions governing loss of argentic voltage during constant potential charging, a second group of four cells has been placed on "float". Following the ten week c.p. charge, the composition of the positive electrodes will be chemically analyzed upon removal from the cell.

Dry and wet resistances will be measured and the values will be compared to freshly charged plates. Special measurements to determine if AgO undergoes a change from "p" to "n" type semi-conductor during c.p. anodization are also being considered. At present the four cells have completed eight weeks of c.p. charging. Results of the analyses will be forthcoming in the next report.

4. Phase 4

The principal problem in operating on the argentous level is the retention of the desired charge and discharge characteristics. It is known from previous work in our laboratories that silver even if initially fine grained loses long argentous oxide voltage after limited cycling. Several avenues are being investigated to maintain the desired characteristics of the silver powder during prolonged cycling.

The first group of cells that was tested included variations in silver particle size, grid, separator system, and to some extent electrolyte concentration. It was learned that increasing grid conductivity and particle surface area did not increase the argentous oxide efficiency; capacity declined rapidly after 12 cycles. However, cell 91 which contained a fine grained silver powder and was cycled in 25% KOH completed 35 cycles before capacity declined to 50% of the theoretical argentous oxide capacity. An attempt was made to restore the cells' capacity by charging and discharging to 1.6 volts and .6 volt respectively for three cycles. It was found that although the full capacity was 3.65 ampere hours (same as cycle 1) the argentous oxide portion was not improved by the deep cycles.

The fairly good performance achieved in cell 91 prompted an investigation into the effect of electrolyte concentration on Ag_2O charge efficiency. A series of cells were fabricated with FR silver pressed to 4.8 g/cc and filled with 23, 25, 27, 29, 31, 36.5, 42, and 44% KOH. The cells were given 14 cycles in which the charge was carried to the monovalent break (1.35 volts); results are plotted in Figure 11. The data show that a maximum of 90% theoretical argentous oxide utilization was obtained in 25% KOH on cycle one. The increased efficiency of Ag_2O in 25-27% electrolyte concentrations might be related to its increased solubility. The maximum solubility is 4.8×10^{-4}N in 27% KOH. Possibly recrystallization of the silver is also retarded through a more efficient replating process during discharge at these lower concentrations.

The effects of conductive and non-conductive additives to increase argentous efficiency were studied in the next group of 25 cells. Construction variables are shown in Table V. Included in Table VI are the capacity data for cycles 1, and 10-15 along with the percentage of theoretical Ag_2O capacity during charge. To date, the cells have completed 15 cycles. They are charged at 86 ma to 1.35 volts and discharged at 2 A to 0.6 volts (the rates are equivalent to the 24 hour orbital regime). The results show that the best cells (nos. 114, 121 and 122) are performing at about 75% of theoretical Ag_2O capacity. Cells 114 and 122 feature 1% palladium coated silver powder, while cell 121 has 1% lead plated powder. The use of Shawinigan Black, graphite, and carbonyl nickel additives do not increase argentous efficiency.

A new type of positive electrode which features a highly porous nickel matrix was developed during the course of this contract and was described in the last report. To summarize briefly: the plate consists of a nickel plaque which is 75% porous and into which $AgNO_3$ + 1% Pb (as $Pb(NO_3)_2$) is impregnated by standard techniques. The plate is then converted to the oxide in alkali and fabricated into a cell.

Two cells were constructed. One had 50% and the other 80% silver by weight of the total electrode weight impregnated into the nickel matrix. Both cells were filled with 38% KOH. They were put on a deep cycle regime to accelerate the test at rates equivalent to the 100 minute orbit.

The first cell is delivering 77% theoretical utilization of active material with 42% available on the argentic plateau, see Figure 12 for performance data at cycle 30.

Gassing rate was measured during charge at cycle 12, and the rate of O_2 evolution was found to be about three times greater than in a standard silver-cadmium cell, see Figure 13. The results show that the cell pressure at the end of charge does not reach a critical level for the operation of sealed cells (30 psig). It remains only to find if the gassing rate increases with cycling.

The second cell, in which the nickel was almost fully loaded with silver, lost 50% of its initial capacity in 10 cycles. The researchers at Gulton (Silver-Cadmium Battery Program Report No. WADD TR-61-131 March 1963) have found that 45-50% by weight of silver in the matrix is the optimum quantity for maximum silver efficiency. This value seems to be in agreement with the performance data obtained by us.

PROGRAM FOR NEXT QUARTER

Phase I

Continue investigation of electroplated cadmium electrodes, with emphasis on determining operating parameters. Investigate the apparent partial inactivation of the negative electrode with cycling. Determine by chemical analysis if $CdCO_3$ forms as result of separator attack. Study the possibility of decreasing the charge of the cadmium electrode on the first charge, (charge to 1.6 volts) and determine Cd and $Cd(OH)_2$ content under different conditions of formation.

Continue orbital cycling of both cell groups, and analyze cell gases periodically. Determine at what point during the charge hydrogen is evolved.

Phase II

Start rotating disc electrode work with cadmium sheet and porous cadmium electrodes, the particular areas of interest being rate constants, and effect of potential.

Study recombination rate of electroplated cadmium, and determine if wet-proofing the electrode increases the oxygen recombination rate.

Phase III

Analyze positive plate polarographically for AgO, Ag_2O, and Ag. Measure resistances of plates and active material versus resistance of pure AgO.

Phase IV

Continue cycling single cells on long orbit regime.

Determine the effect of 25% KOH on performance of "doped" FR and MR silver powders.

Continue cycling the silver impregnated nickel cell on accelerated regime. Build cells with more efficient negatives to increase energy density of the cell. Also, build a cell with 25% KOH to increase AgO utilization.

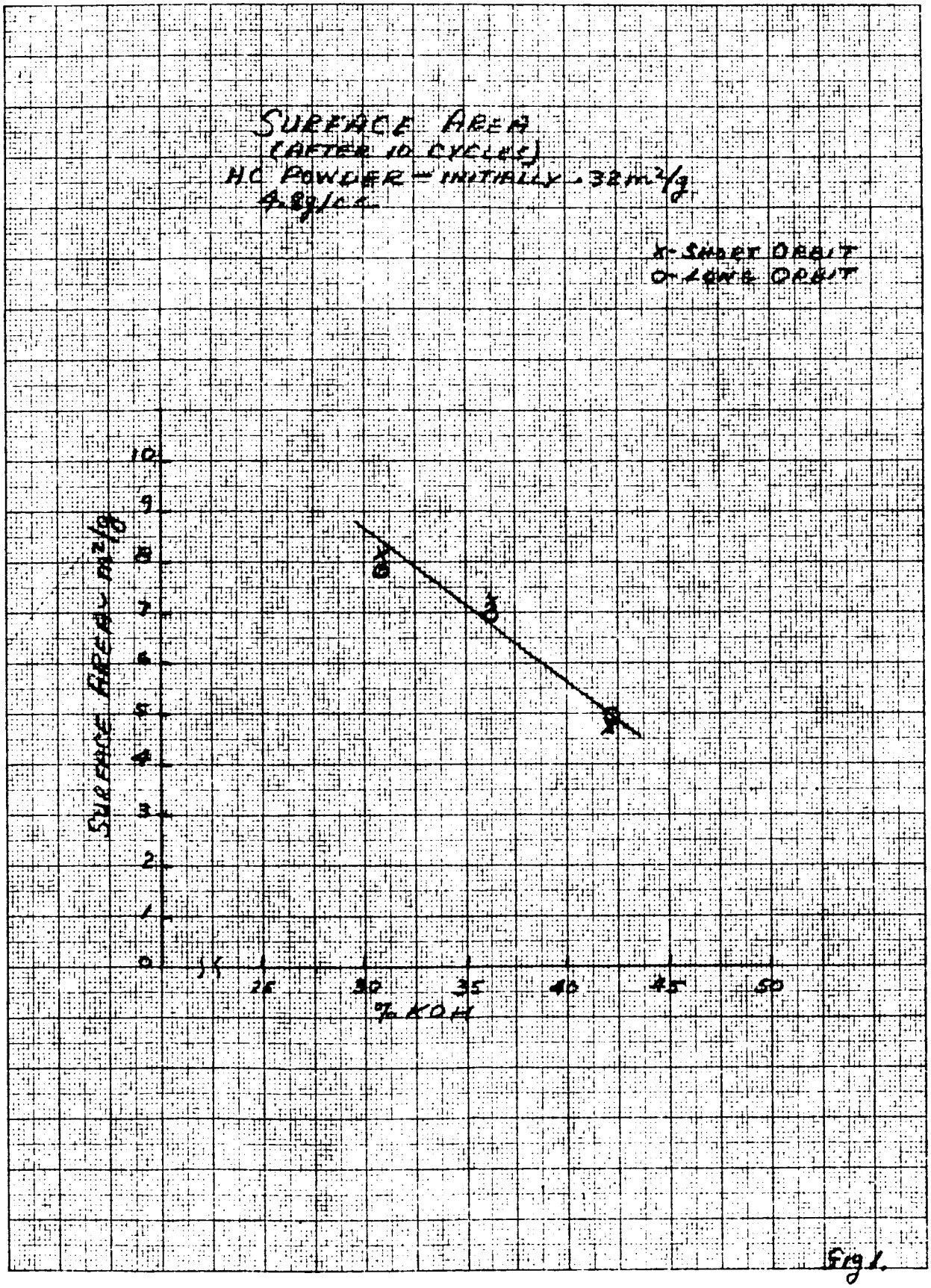
SURFACE AREA
(AFTER 10 CYCLES)
HC POWDER - INITIALLY - 32 m²/g
4.8g/cc
x - SUPER ORBIT
o - LOWE ORBIT
SURFACE AREA m²/g
% KOH
0
1
2
3
4
5
6
7
8
9
10
25
30
35
40
45
50

Fig 1.

PERFORMANCE DATA
CADMIUM-INDIUM ALLOY
(CYCLE 2)

4.30g Cd/CELL
2(+) - 1(-)
NEG AREA = 4.45 IN²
C.D. = 55 ma/IN²

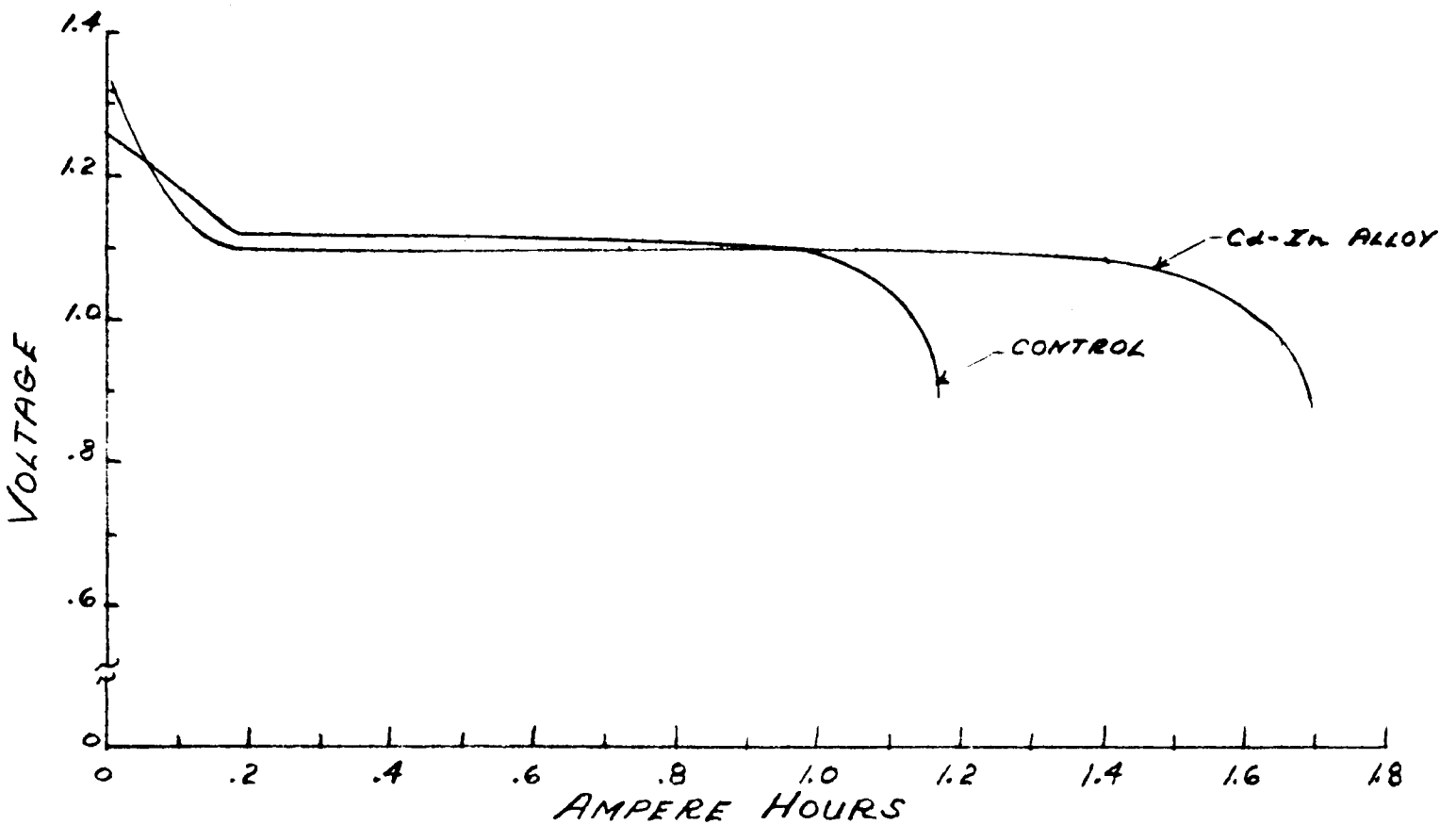

Fig. 2

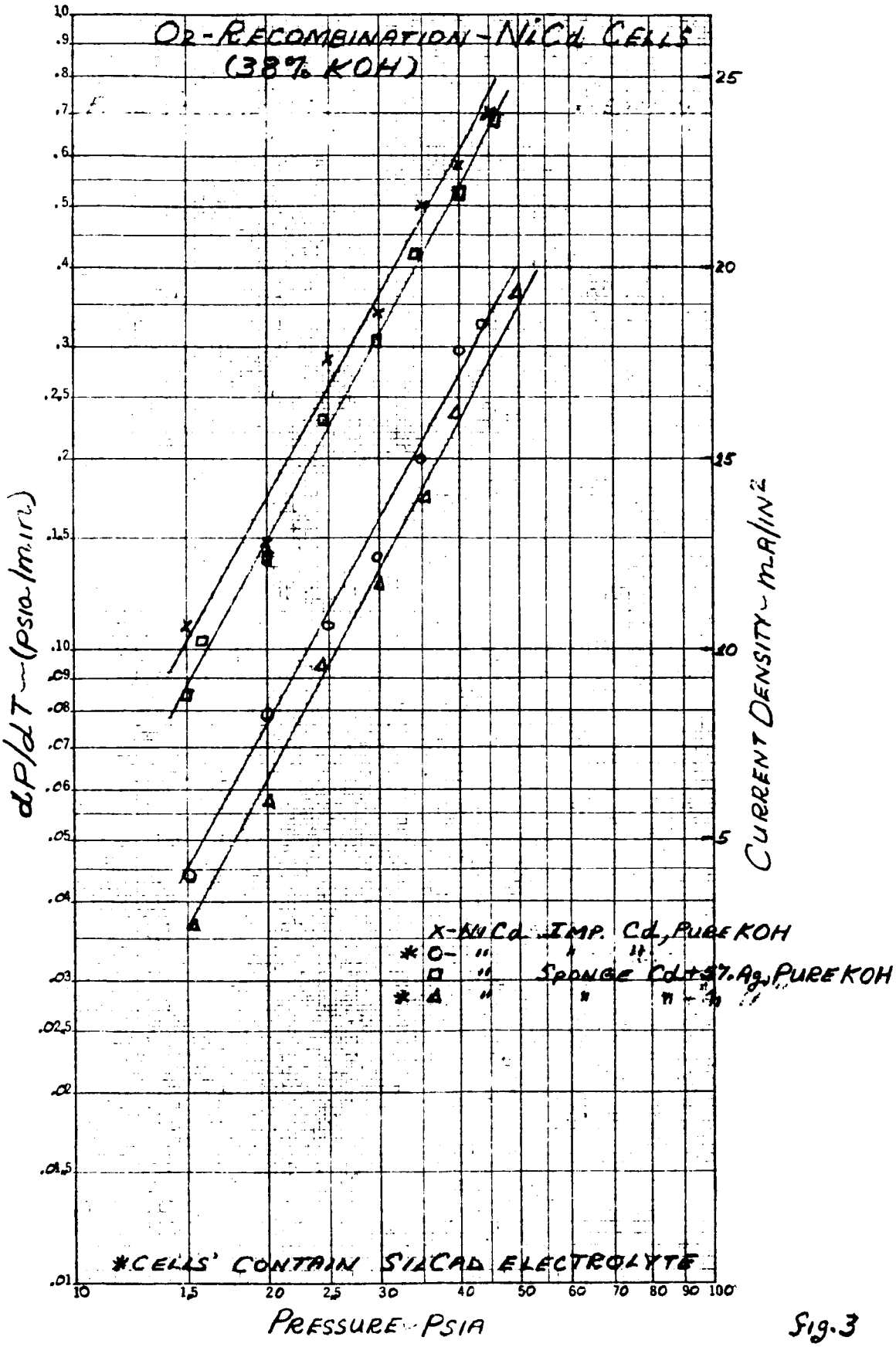
O2-RECOMBINATION-NiCd CELLS
(38% KOH)
dP/dT ~ (psia/min.)
CURRENT DENSITY ~ mA/in²
PRESSURE ~ PSIA
X-NiCd IMP. Cd, PURE KOH
* O- " " " "
□ " SPONGE Cd+37.Ag, PURE KOH
* Δ " " " " - " "
*CELLS' CONTAIN SILCAD ELECTROLYTE

Fig. 3

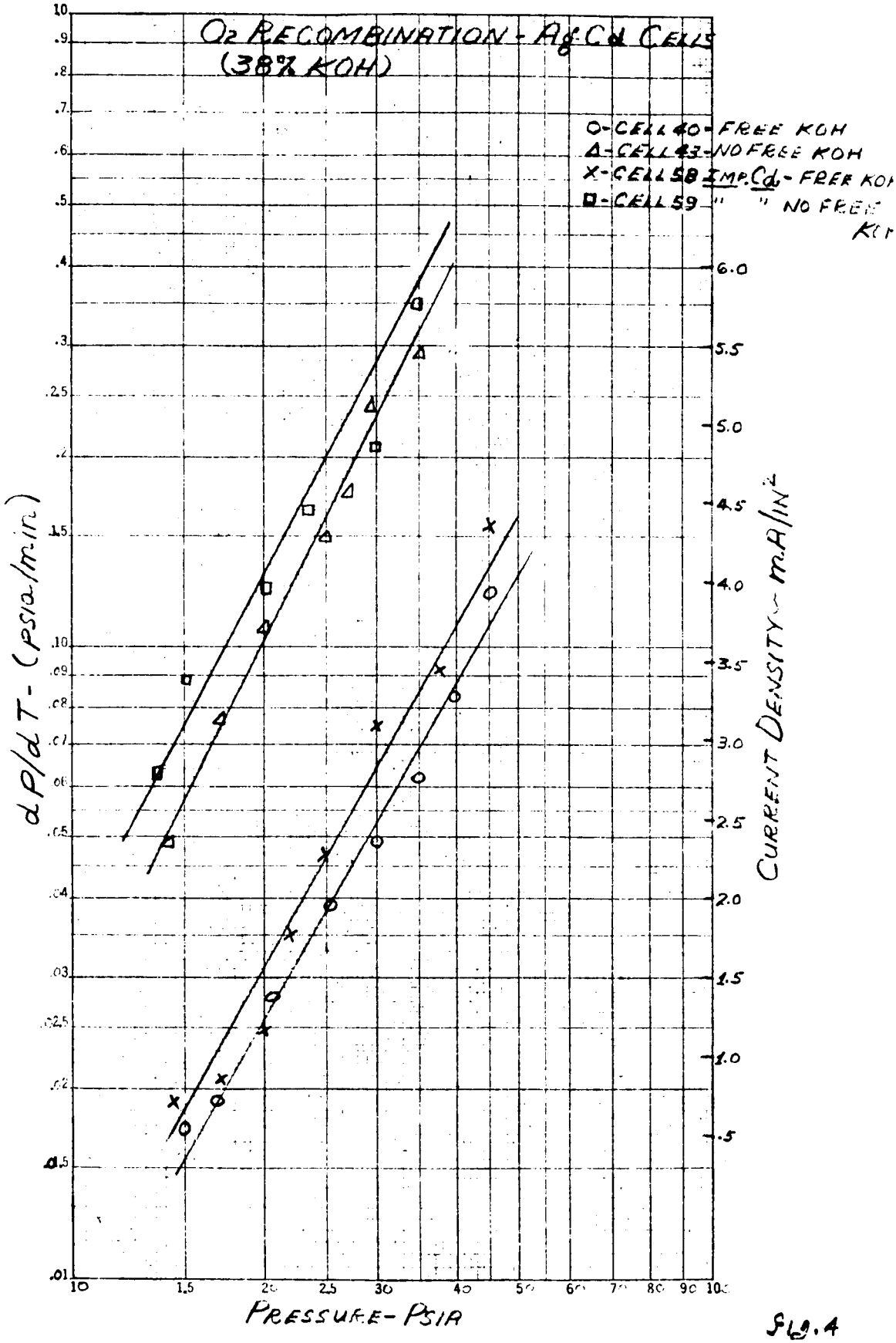
O2 RECOMBINATION - Ag & Cd CELLS
(38% KOH)
O-CELL 40 - FREE KOH
Δ-CELL 43 - NO FREE KOH
X-CELL 58 IMP. Cd - FREE KOH
□-CELL 59 " " NO FREE KOH
dP/dT - (psia/min)
CURRENT DENSITY ~ mA/IN²
PRESSURE - PSIA

Fig. 4

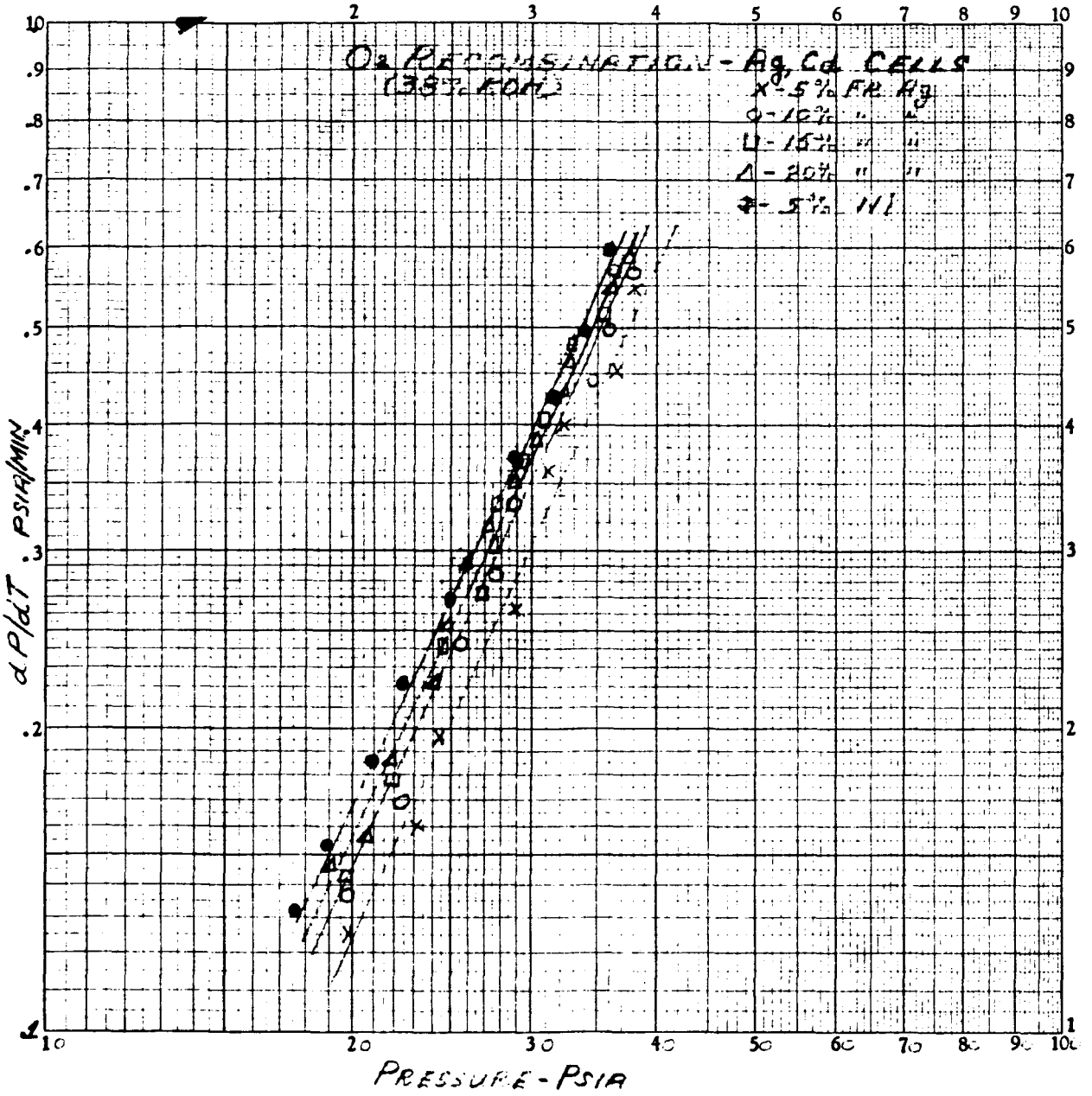
O2 RECOMBINATION - Ag, Cd CELLS
(35% KOH)
X - 5% Pt Ag
O - 10% " "
□ - 15% " "
Δ - 20% " "
● - 5% Ni
dP/dT . PSIA/MIN
PRESSURE - PSIA

Fig. 5

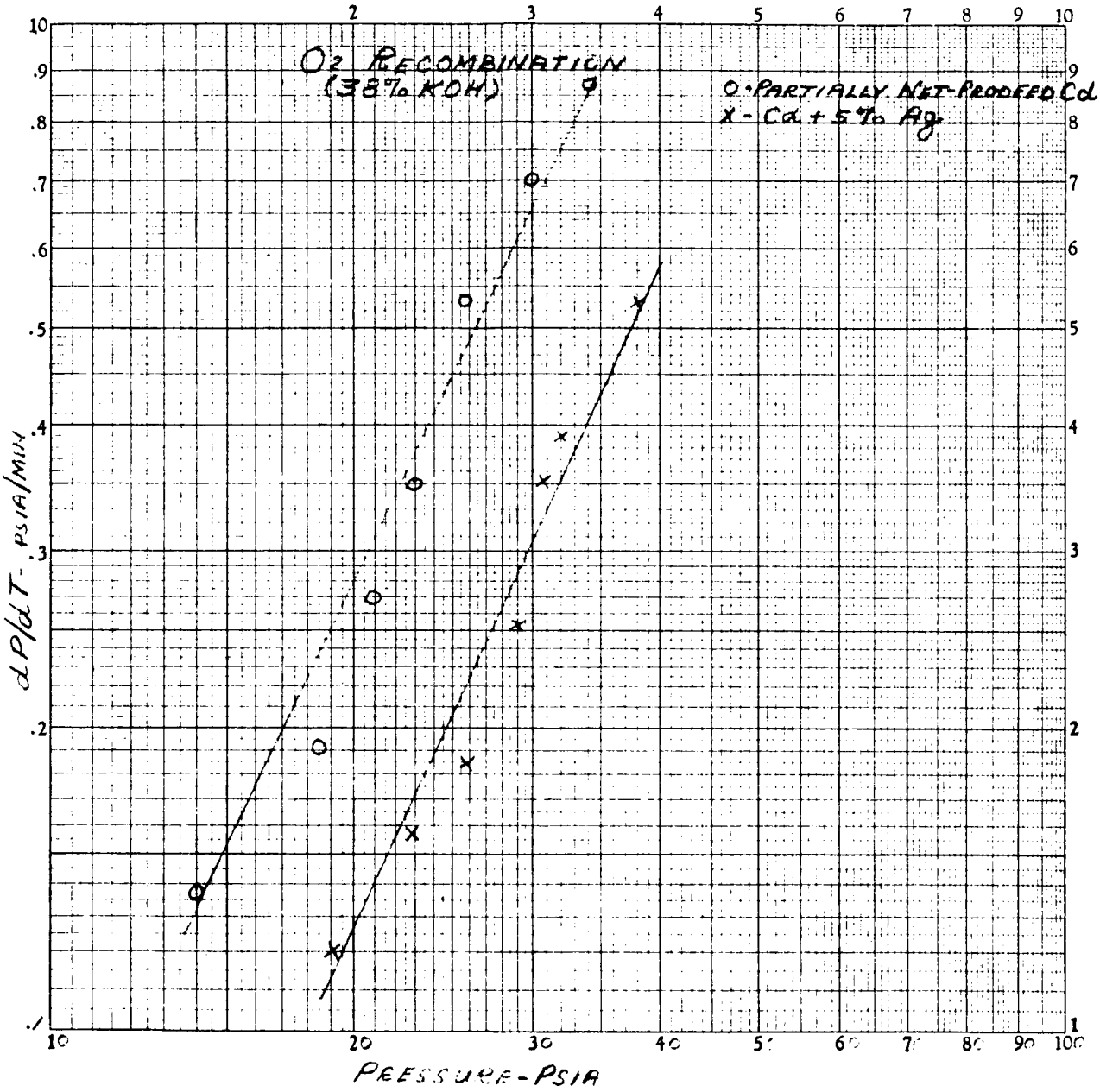
O2 RECOMBINATION
(38% KOH)
O - PARTIALLY WET-PROOFED Cd
X - Cd + 5% Ag
dP/dT - PSIA/MIN
PRESSURE - PSIA

Fig.6

PROLONGED TRICKLE CHARGING

CURRENT DENSITY = 0.1 MA/IN²

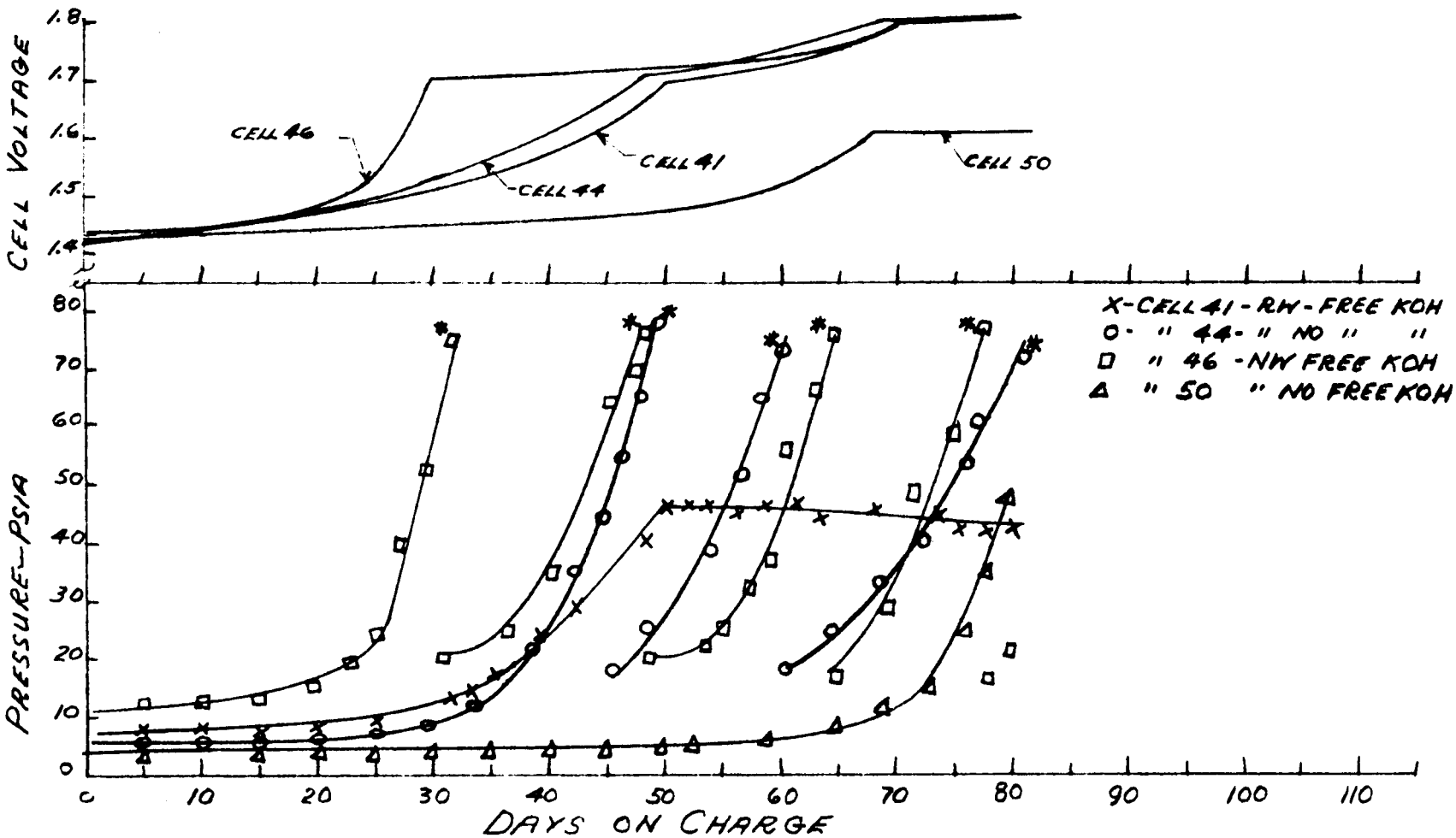

* CELL VENTED

Fig. 7

Fig. 8 - DETAIL OF ROTATING DISC APPARATUS

1) Gas Inlet

2) Preparation Chamber

3) Test Compartment

4) Rotating Disc Electrode

5) Porous Plug Electrolyte Bridge

6) Speedometer Contact

7) Rotating Disc Contact

8) Motor

9) Hg/HgO Reference Electrode

10) Dropping Mercury Electrode (DME)

11) Porous Plug

12) Hg/HgO Counter Electrode

13) Rubber Retaining Rings

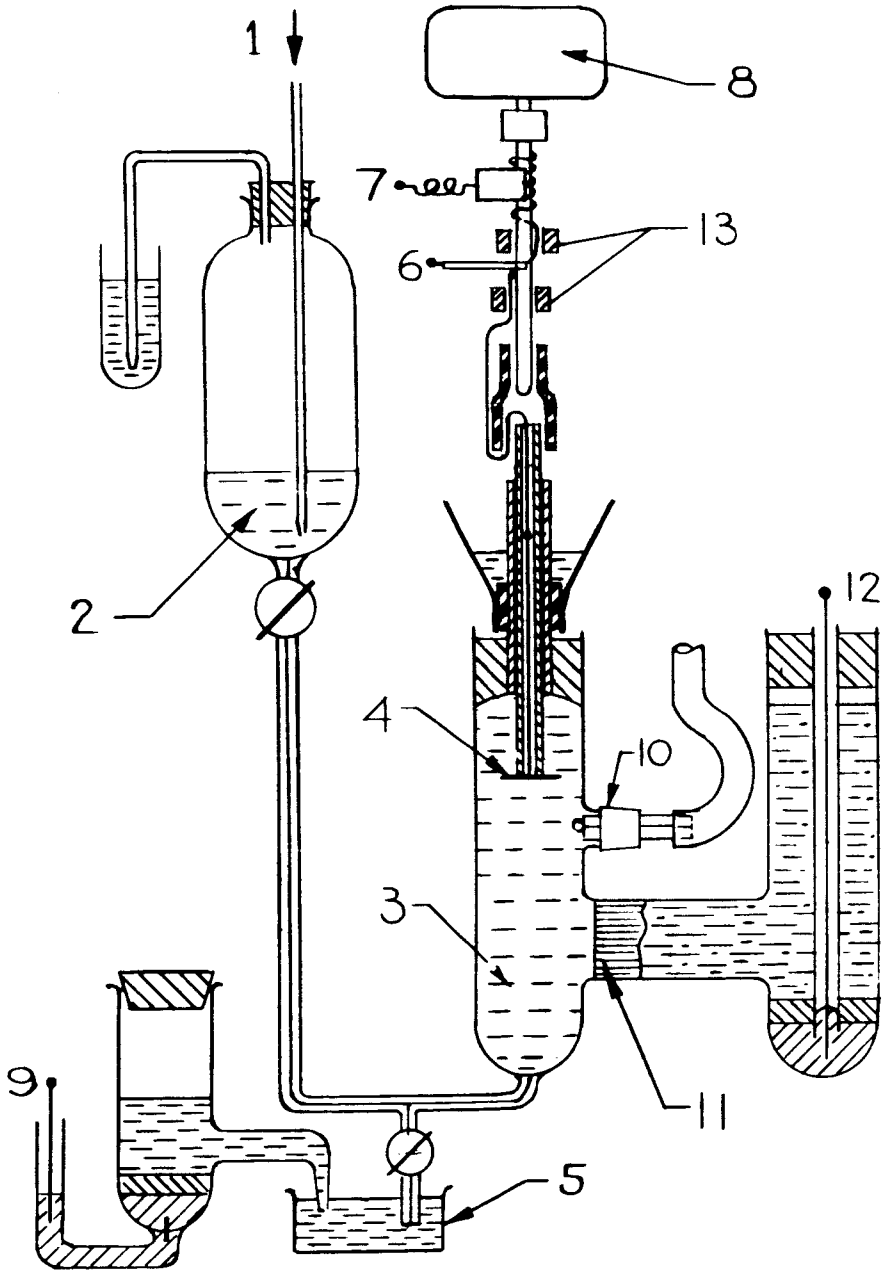
1
8
7
13
6
2
12
4
10
3
9
11
5

Fig. 9 - BLOCK DIAGRAM OF ROTATING DISC APPARATUS

1) Polarograph Sargent Model XXI

2) Switch

3) Counter Electrode (+)

4) Dropping Mercury Electrode (DME)

5) Cadmium Rotating Disc Electrode

6) Motor

7) Electronic Speed Control

8) Reference Electrode

9) Potentiostat, Wenking Fast Rise Time

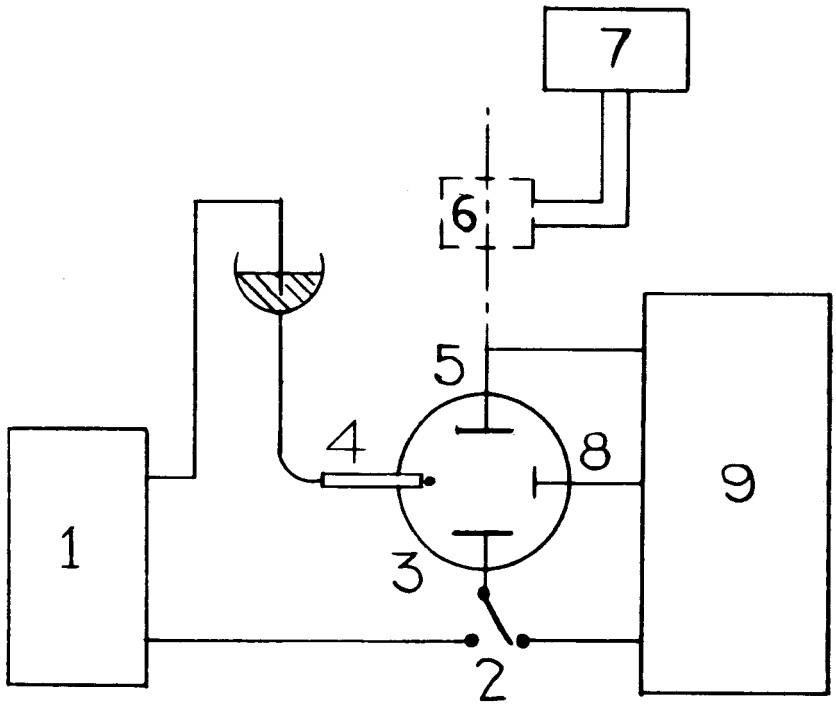

Fig. 9

DEEP DISCHARGE FOLLOWING 10 WEEK FLOAT
(SIX HOUR RATE)

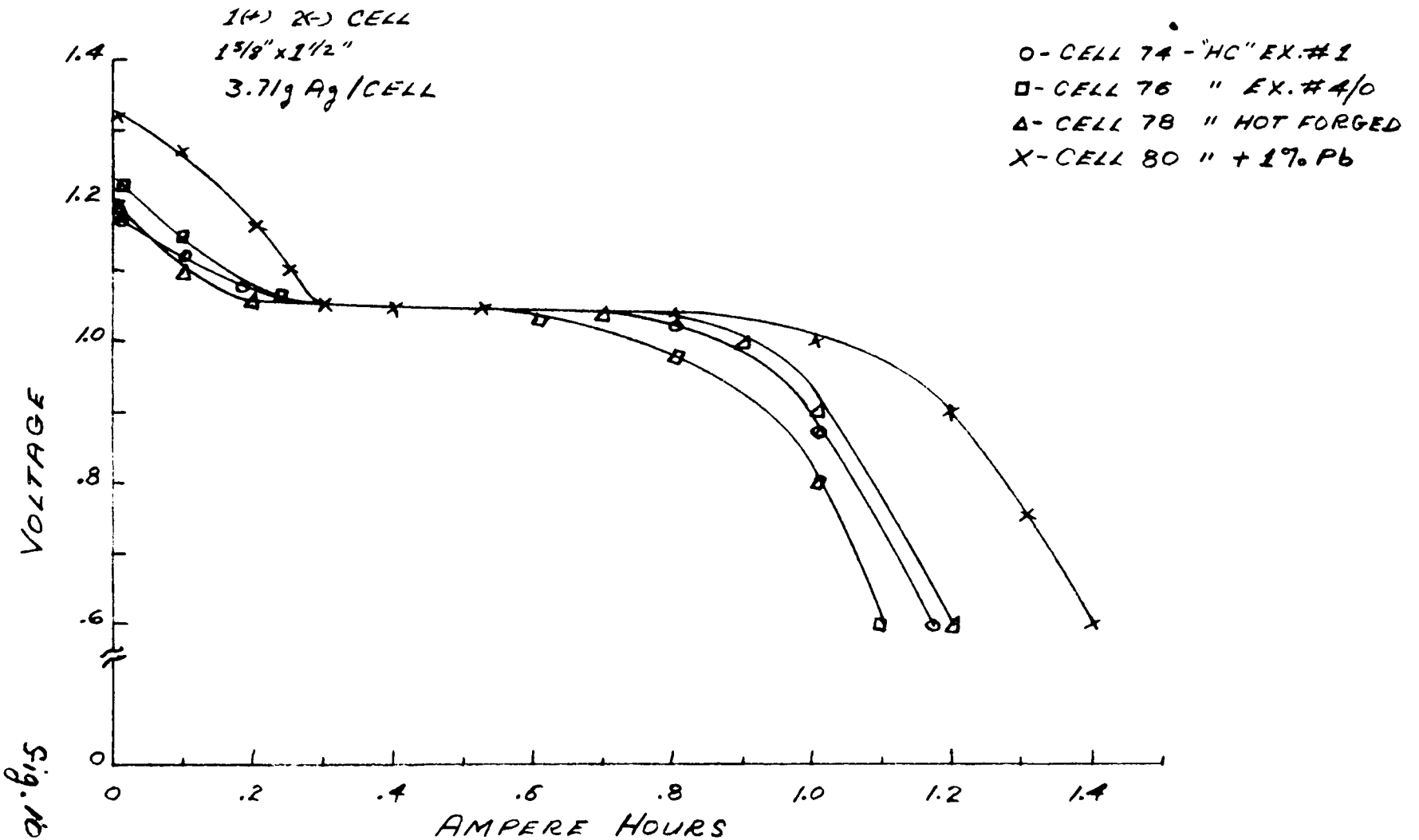

Fig. 16

SILVER MONOXIDE UTILIZATION

CURRENT DENSITY = 5ma/in² - Ic
" " = 120ma/in² - ID

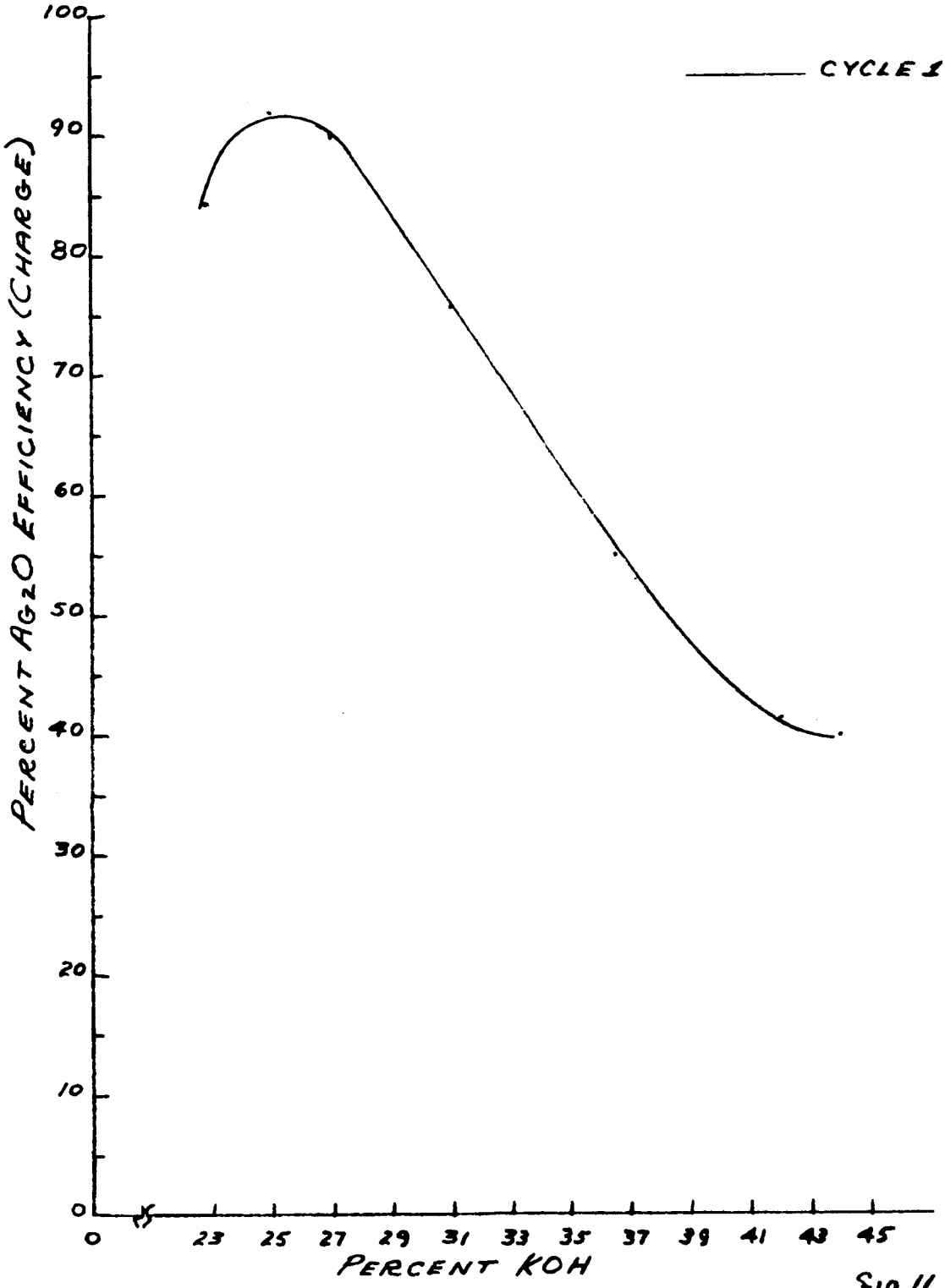

Fig. 11

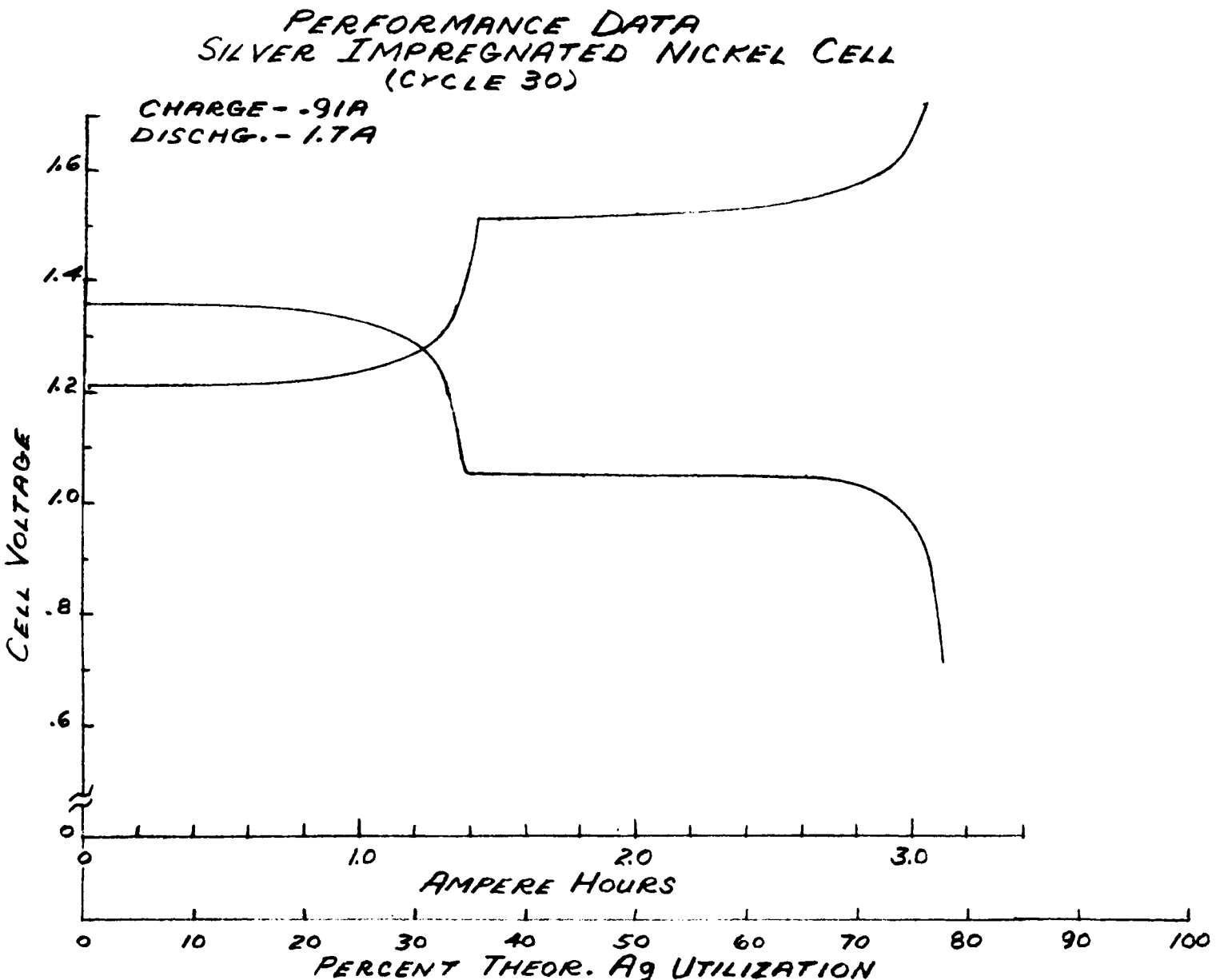
PERFORMANCE DATA
SILVER IMPREGNATED NICKEL CELL
(CYCLE 30)
CHARGE - .91A
DISCHG. - 1.7A
CELL VOLTAGE
1.6
1.4
1.2
1.0
.8
.6
0
0
1.0
2.0
3.0
AMPERE HOURS
0
10
20
30
40
50
60
70
80
90
100
PERCENT THEOR. Ag UTILIZATION

Fig. 12

GAS EVOLUTION DURING CHARGE
(CYCLE 12)
CURRENT DENSITY = 65 ma/in²-Ic

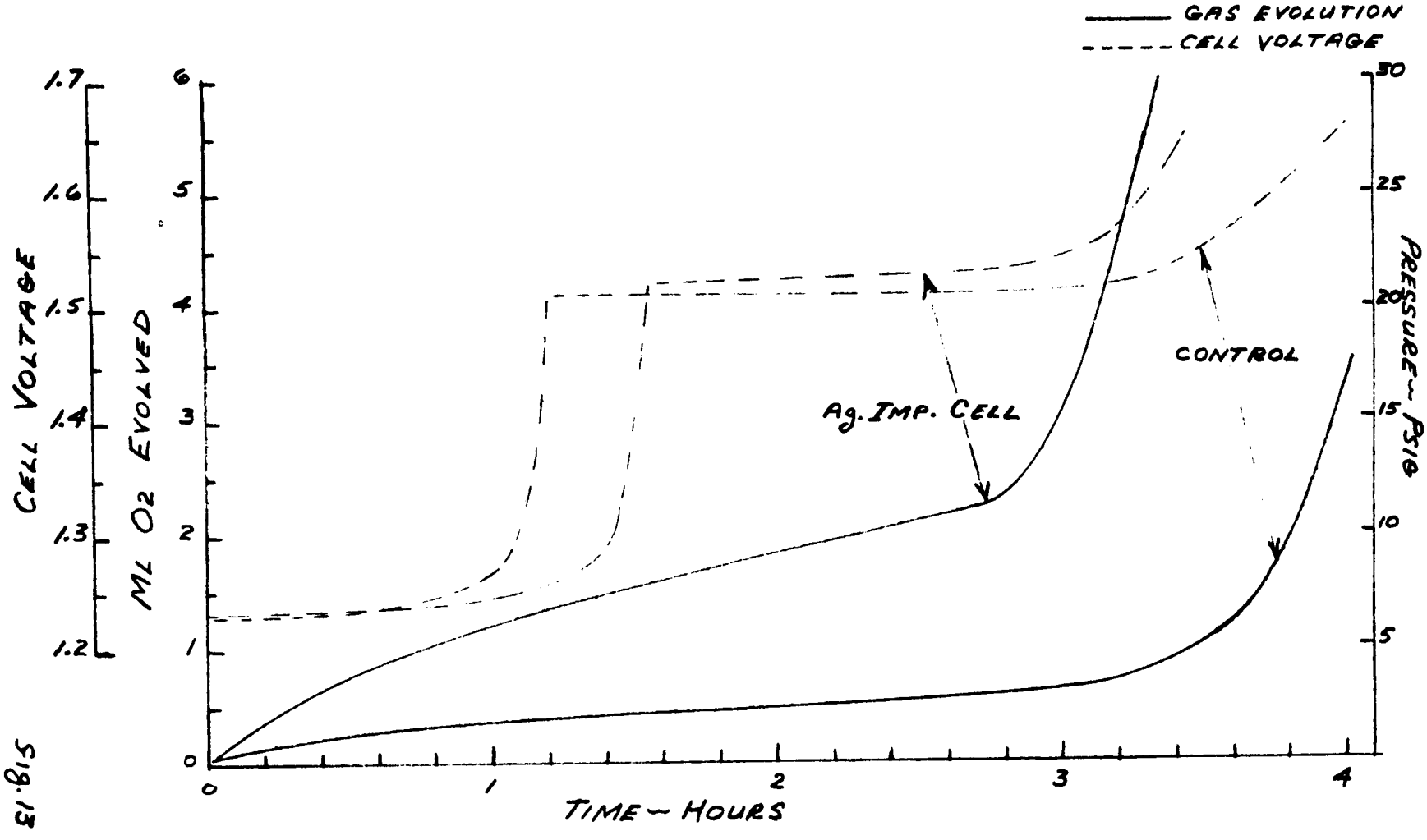

FIG. 13

TABLE I
CELL TESTS-DEEP CYCLES
(LONG ORBIT)

CYCLES →	3		4		7		8		9		
CELL #	AHo	AHi	AHo	AHi	AHo	AHi	AHo	AHi	AHo	AHi	CELL CONSTRUCTION
	RT		-15°C		RT		+50°C		RT		
1	3.4	3.1	1.2	1.2	2.5	2.9	3.2	3.6	3.2	2.9	31% KOH - 4.8g/cc (+) "HC" PWD. - 2.8g Cd/cc
3	3.3	3.3	1.9	1.9	3.3	3.4	3.4	3.7	3.5	3.6	36.5% " " " " " " " " "
5	3.3	3.4	2.0	1.9	3.2	3.4	3.4	3.6	3.5	3.6	42% " " " " " " " " "
7	3.8	3.8	2.0	1.9	3.4	3.6	4.2	4.5	3.9	3.9	" " 4.2g/cc " " " " " "
9	3.5	3.6	2.2	2.1	3.3	3.7	4.0	4.05	3.9	3.9	" " 3.6g/cc " " " " " "
11	3.7	3.7	2.3	2.1	3.5	3.6	4.0	4.1	3.9	3.9	" " 4.8g/cc "HAHS" PWD " " "
13	3.9	4.5	1.9	1.4	3.3	3.7	3.8	4.1	3.8	3.6	" " " " "FR" " " " "
15	3.9	3.9	2.5	2.2	3.7	4.0	4.0	4.2	4.1	4.0	PRESSED CdO (-) 2.3g Cd/cc 4.8g Ag/cc
17	4.0	4.0	2.2	2.05	3.7	4.0	4.1	4.3	3.9	4.0	" " " 3.3 " " " " " "
21	3.9	3.9	2.3	2.1	3.3	3.6	4.0	4.2	3.9	3.9	PASTED CdO (-) 2.8g Cd/cc " " "
27	3.4	3.6	2.6	2.45	3.5	3.5	3.4	3.5	3.4	3.3	" " " " " " " " "
29	1.6	1.65	.9	.7	1.4	1.4	1.8	1.8	2.0	1.8	IMPREGNATED Cd in Ni " " "
31	3.9	4.3	2.7	2.1	3.2	3.5	4.1	4.3	4.0	3.7	PRESSED CdO + 2% SHAW. BLACK " " "
33	3.9	4.2	2.5	2.1	3.1	3.5	4.1	4.2	3.8	3.7	" " " " GRAPHITE " " "
35	3.6	4.0	2.3	1.8	2.9	3.0	3.5	3.6	3.4	2.9	" " " 5% FR SILVER " " "
37	3.7	3.8	2.4	2.1	3.5	3.8	3.9	4.1	3.7	3.6	" " 2.8g Cd/cc REVERSE WRAP
67	3.8	3.8	2.7	2.4	3.7	3.9	3.9	3.9	3.7	3.6	(+) 3.6g Ag/cc 2PVA/3C19 - 42% KOH 2.8g Cd/cc
69	3.6	3.5	2.2	2.1	2.9	3.3	4.0	4.1	3.4	3.7	(+) 4.8 " " " " " " " " " "
71	3.5	3.5	2.9	2.6	3.5	3.6	3.3	3.5	3.3	3.2	2NY/3PVA - 4.8g Ag/cc " " 2.8g Cd/cc
73	3.5	3.8	2.6	2.1	3.8	3.8	3.5	3.7	3.4	3.5	" " " " " " 31% KOH " " "

I_C 5.6 ma/in² I_D 140 ma/in²

CELLS 5-37 42% KOH

" 1-37 (+) 2NY/6C19/(-)

TABLE II
CELL TESTS - DEEP CYCLES
(SHORT ORBIT)

CYCLES →	3		4		7		8		9		85 (FOLLOWING SHALLOWS)		
CELL #	AHo	AHi	AHo	AHi	AHo	AHi	AHo	AHi	AHo	AHi	AHo	AHi	CELL CONSTRUCTION
	RT		-15°C		RT		+50°C		RT		RT		
2	3.1	3.6	1.5	1.2	1.9	1.6	2.5	2.5	1.7	1.5	2.5	2.7	31% KOH - 4.8g Ag/cc "HC" PWD
4	1.7	4.8	CELL SHORTED										36.5 " " " " " "
6	2.9	3.1	1.8	1.2	2.3	1.5	2.2	2.1	1.7	1.5	2.6	2.5	42% " " " " " "
8	2.3	2.6	1.9	1.2	2.1	1.8	2.2	1.8	1.7	1.9	2.2	2.4	" " 4.2g Ag/cc " "
10	3.2	3.5	1.7	1.4	2.3	2.1	2.0	2.6	2.1	2.2	2.7	2.9	" " 3.6g Ag/cc " "
12	2.9	2.7	2.2	1.2	2.5	1.6	2.7	2.6	1.4	1.3	1.9	2.0	" " 4.8g Ag/cc "HAMS" PWD
14	3.2	3.4	1.9	1.3	1.7	1.6	1.8	2.0	1.4	1.6	1.8	1.9	" " " " " "FR" "
16	3.0	3.0	2.2	1.2	2.1	1.3	2.3	2.0	1.7	1.8	2.4	2.3	PRESSED CdO 2.3g Cd/cc 4.8g Ag/cc
18	3.4	3.8	1.7	1.2	2.2	1.8	2.3	2.3	1.7	1.9	2.8	2.9	" " 3.3g Cd/cc " " "
22	3.9	4.1	2.7	1.6	3.5	3.2	3.9	3.7	3.0	3.0	3.8	3.7	PASTED CdO 2.8g Cd/cc " " "
28	4.1	4.3	2.8	1.7	3.8	3.9	4.1	3.8	3.5	3.4	3.9	3.8	" " " " " " " "
30	1.5	1.6	2.0	1.3	1.4	1.4	1.8	1.7	1.3	1.3	2.0	2.2	IMPREGNATED Cd in Ni " " "
32	3.7	4.3	2.2	1.4	3.2	3.1	3.5	3.4	2.6	2.6	3.0	3.1	PRESSED CdO + 2% SHAW. BLACK
34	3.1	3.3	2.5	1.5	3.0	3.0	3.6	3.4	2.2	2.2	3.3	3.2	" " " " GRAPHITE
36	2.9	3.15	2.2	1.3	2.8	2.5	2.8	2.6	2.2	2.3	3.1	3.1	" " + 5% FR SILVER
38	3.3	3.8	2.2	1.4	2.5	2.5	2.9	2.8	2.3	2.4	3.5	3.5	" " 2.8g Cd/cc REVERSE WRAP
66	3.9	4.0	3.0	1.4	3.5	3.2	3.7	3.5	2.1	2.0	3.0	3.1	3.6g Ag/cc 2PVA/3C19 - 42% KOH
68	3.3	3.5	2.6	1.3	2.4	2.5	3.7	3.5	2.4	2.5	3.8	3.9	4.8 " " " " " " " "
70	3.4	3.7	3.0	1.3	3.5	3.1	3.4	3.4	2.6	2.7	3.5	3.7	" " " 2NY/3PVA - " "
72	3.4	3.9	2.8	1.6	2.8	2.7	1.1	1.1	.9	.8	CELL SHORTED		" " " " - 31% KOH

I_C 65 ma/in² I_D 100 ma/in²

CELLS 2-38 (2NY/6C19)

" 6-38 42% KOH

TABLE III
HYDROGEN ANALYSES
(CYCLE 240)

CELL NO.	PERCENT HYDROGEN	END OF CHARGE VOLTAGE
2	67.7	1.87
8	100	1.96
10	33	1.73
12	23.5	1.68
22	57.7	1.71
66	93.3	1.81

TABLE IV
SEPARATOR DEGRADATION
ELECTROLYTE ANALYSES

CELL NO.	SEPARATOR	ANALYSIS AFTER NO. DAYS @ 122°F											
		1		3		7		14		28		56	
		% KOH	% K_2CO_3	% KOH	% K_2CO_3	% KOH	% K_2CO_3	% KOH	% K_2CO_3	% KOH	% K_2CO_3	% KOH	% K_2CO_3
129	(+) 2NY/6C19	40.8	4.95	40.5	5.17	40.5	5.23	40.2	6.05	39.7	6.21	39.3	7.27
130	" " "	29.8	2.75	29.2	3.46	29.0	5.20	28.8	7.00	28.5	7.17	28.0	9.71
131	1NY/2PVA/3C19	41.0	1.82	40.3	4.15	40.2	4.50	40.2	6.75	39.6	6.77	39.1	6.91
132	" " "	29.7	4.85	29.5	5.51	29.0	5.63	28.8	7.42	28.3	7.65	27.1	11.0
133	2NY/4PVA	41.2	2.78	40.5	4.52	40.5	4.85	40.6	5.75	39.9	6.23	39.5	6.75
134	" "	31.0	4.15	30.8	4.37	29.9	5.55	29.4	7.00	29.0	7.00	27.9	8.47
135	1XPE40+50/5C19	40.5	2.85	40.4	4.31	40.5	4.34	39.7	6.35	39.8	7.24	39.7	7.40
136	" "	29.5	4.83	29.3	5.55	29.2	5.58	29.3	6.90	28.9	7.00	28.8	7.52

ODD NOS. INITIALLY FILLED WITH 42.5% KOH
EVEN " " " " 32.1% "

K_2CO_3 DENOTES ALL THE SALTS TITRATED BETWEEN THE PHENOLPHTHALEIN AND METHYL ORANGE END POINTS

TABLE V
SINGLE LEVEL VOLTAGE - ADDITIVES

CELL NO.	TYPE SILVER	ADDITIVE	ELECTROLYTE CONC.
98	"HC" - UNSINTERED	5% SHAW. BLK.	42% KOH
99	" "	20% GRAPHITE	" "
100	" "	10% NICKEL	" "
101	" "	1% LEAD	" "
102	" "	1% Pb ON GRID	" "
103	"HC" - SINTERED	1% Pd ON PWD	" "
104	"FR" - HOT PRESS.	5% SHAW. BLK	25% KOH
105	" " "	10% " "	" "
106	" " "	5% GRAPHITE	" "
107	" " "	10% "	" "
108	" " "	20% "	" "
109	" " "	5% NICKEL	" "
110	" " "	1% LEAD	42% KOH
111	" " "	5% Pb ON GRID	" "
112	" " "	1% " ALLOY	" "
113	" " "	5% " "	" "
114	" " "	1% Pd ON PWD	" "
115	" SINTERED	5% SHAW BLK	25% KOH
116	" "	10% GRAPHITE	" "
117	" "	5% NICKEL	" "
118	" "	10% NICKEL	" "
119	" "	1% LEAD	42% KOH
120	MR - HOT PRESS.	5% NICKEL	25% KOH
121	" " "	1% LEAD	42% KOH
122	" " "	1% Pd ON PWD	" "

SEPARATOR SYSTEM - ALL CELLS - (+) 2NY/6C19/(-)

TABLE VI
SINGLE LEVEL VOLTAGE CAPACITY DATA

CYCLES →	* 1			10			11			12			13			14			15		
CELL NO.	AHo	AHi	% Ag_2O	AHo	AHi	% Ag_2O	AHo	AHi	% Ag_2O	AHo	AHi	% Ag_2O	AHo	AHi	% Ag_2O	AHo	AHi	% Ag_2O	AHo	AHi	% Ag_2O
98	3.03	3.1	21	.71	.65	23	.65	.65	23	.60	.63	22	.65	.70	25	.65	.60	21	.63	.64	23
99	3.2	3.3	23	.80	.75	27	.69	.70	25	.70	.70	25	.70	.80	28	.70	.65	23	.68	.65	23
100	3.25	3.3	21	.93	.95	33	.90	.91	33	.83	.85	30	.90	1.0	36	.95	.90	32	.92	.90	32
101	3.55	3.45	26	.71	.75	27	.66	.68	24	.65	.65	23	.68	.70	25	.70	.75	27	.72	.70	25
102	3.5	3.55	26	.81	.80	29	.77	.75	27	.70	.70	25	.75	.77	28	.75	.75	27	.70	.75	27
103	3.3	3.3	36	1.42	1.47	53	1.52	1.55	55	1.59	1.6	58	1.60	1.62	58	1.61	1.59	57	1.55	1.55	55
104	3.3	3.4	37	.60	.66	23	.70	.65	23	.65	.68	24	.61	.55	20	.53	.50	18	.45	.50	18
105	3.55	3.65	31	.65	.70	25	.66	.71	26	.65	.65	23	.70	.75	27	.70	.68	24	.65	.63	22
106	3.55	3.7	31	.72	.75	27	.70	.69	25	.70	.70	25	.71	.90	32	.85	.85	30	.80	.80	28
107	3.65	3.35	33	.80	.85	30	.75	.75	27	.70	.75	27	.82	.80	28	.78	.75	27	.75	.80	28
108	3.75	3.65	40	.90	.88	31	.85	.80	28	.75	.75	27	.80	.80	28	.75	.76	27	.73	.71	25
109	3.45	3.3	42	1.25	1.3	46	1.3	1.3	47	1.3	1.25	45	1.15	1.10	40	1.06	1.08	39	1.05	1.05	38
110	3.75	3.8	26	1.26	1.32	47	1.21	1.23	44	1.25	1.21	43	1.20	1.15	41	1.05	1.05	38	1.07	1.03	37
111	4.13	4.05	47	1.1	1.15	41	1.05	1.12	40	1.1	1.1	39	1.1	1.0	36	1.1	.95	34	1.0	1.0	36
112	3.4	3.5	49	1.53	1.55	56	1.61	1.65	59	1.68	1.7	61	1.71	1.65	59	1.65	1.68	60	1.7	1.7	61
113	3.8	3.8	25	1.23	1.25	45	1.2	1.2	43	1.15	1.2	43	1.3	1.1	39	1.1	.95	34	1.0	.95	34
114	3.65	3.7	51	1.97	1.95	70	2.03	2.05	73	2.05	2.08	75	1.95	2.05	74	2.03	2.0	72	2.05	2.05	74
115	3.3	3.5	35	.95	1.0	35	.91	.95	34	.90	.90	32	.87	.83	30	.80	.80	28	.78	.75	27
116	3.4	3.3	24	1.0	1.05	38	1.1	1.15	41	1.08	1.1	39	1.0	1.08	38	1.05	1.0	36	.95	1.0	36
117	3.65	3.7	40	1.31	1.2	43	1.33	1.25	45	1.25	1.23	44	1.15	1.1	40	1.06	1.05	38	1.05	1.02	36
118	3.2	3.0	23	1.15	1.1	40	1.07	1.05	37	.95	1.0	36	1.0	.80	28	.95	.95	34	.90	.88	32
119	3.45	3.3	28	1.57	1.62	58	1.61	1.65	59	1.7	1.7	61	1.72	1.75	63	1.69	1.70	61	1.73	1.75	63
120	3.35	3.4	36	1.0	1.05	38	1.05	1.05	37	.98	1.0	36	.90	.87	31	.85	.88	32	.85	.80	28
121	3.55	3.4	45	1.88	1.85	67	1.92	1.97	71	[illegible]	2.0	72	1.91	1.95	70	1.95	1.98	71	2.0	1.95	70
122	3.70	3.6	59	2.03	2.0	72	2.10	2.07	75	2.08	2.08	75	2.1	2.1	76	2.05	2.03	73	2.0	2.0	72

* FULL CAPACITY CYCLE

CY2-15-CHAR 1.35 V

NASA-Langley, 1964 CR-57008