442 p.

NASA CR-56021

N64-25950

Code-1 Cat. 14

BIOMEDICAL AND HUMAN FACTORS REQUIREMENTS FOR A MANNED EARTH ORBITING STATION

By W. Helvey, C. Martell, J. Peters, G. Rosenthal, F. Benjamin, and G. Albright

Prepared under Contract No. NASw-776 by
REPUBLIC AVIATION CORPORATION
Farmingdale, L.I., New York

OTS PRICE

XEROX $ 22.25 ph

MICROFILM $

NATIONAL AERONAUTICS AND SPACE ADMINISTRATION

FOREWORD

This study was conducted under NASA contract NASw-776, awarded and monitored by the Office of Manned Space Flight, NASA Headquarters, where Dr. Heber Moore was the contract monitor.

ACKNOWLEDGEMENTS

This report is the result of a study conducted by Republic Aviation Corporation in conjunction with Spacelabs, Inc., in a team effort in which Republic Aviation Corporation was prime contractor. In order to determine the realistic engineering design requirements associated with the medical and human factors problems of a manned space station, an interdisciplinary team of personnel from the Research and Space Divisions was organized. This team included engineers, physicians, physiologists, psychologists, and physicists. Recognizing that the value of the study is dependent upon medical judgments as well as more quantifiable factors (such as design parameters) a group of highly qualified medical consultants participated in working sessions to determine which medical measurements are required to meet the objectives of the study. In addition, various Life Sciences personnel from NASA (Headquarters, Langley, MSC) participated in monthly review sessions. The organization, team members, consultants, and some of the part-time contributors are shown in Figure 1. This final report embodies contributions from all of these participants.

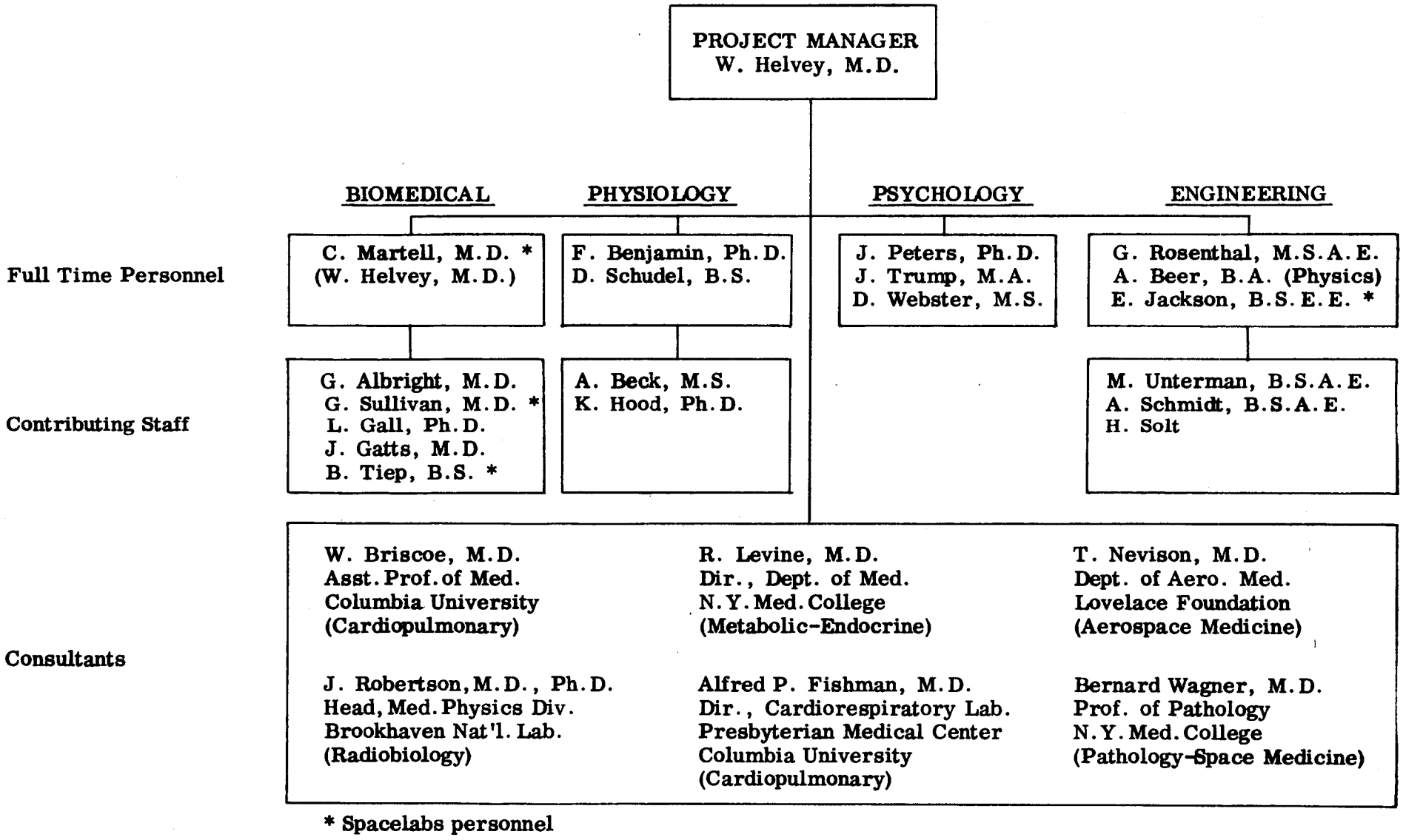

* Spacelabs personnel

Figure 1. Project Organization

CONTENTS

Section		Page
	FOREWORD	i
	ACKNOWLEDGEMENTS	ii
I	INTRODUCTION	1
II	DEFINITION OF THE ENVIRONMENT	3
	A. Introduction	3
	B. Weightlessness	3
	C. Dynamic Factors	4
	D. Ionizing Radiations	8
	E. Cabin Atmosphere	13
	F. Contaminants	15
	G. Thermal Environment	20
	H. Circadian Rhythm	23
	I. Psychophysiological Factors	26
III	MAN'S RESPONSE TO THE ENVIRONMENT	29
	A. Weightlessness	31
	B. Dynamic Factors	50
	C. Radiation	60
	D. Cabin Atmosphere	71
	E. Contaminants	76
	F. Thermal Environment	82
	G. Circadian Rhythms	87
	H. Psychophysiological Factors	93
	I. Summary	96
IV	SELECTION OF MEASUREMENTS	101
	A. Introduction	101
	B. Physiological Functions and Measurements	102
	C. Selected Biomedical Measurement Methods	117
	D. Required or Class 1 Measurements	117
	E. Desired Class 2 Measurements	141
	F. Medical History	156
	G. Medical Physical Examination	159
	H. Human Factors	167
	I. Psychological Equipment Listings	224
	J. Mission Safety Measurements	224

CONTENTS (cont'd)

Section		Page
V	EXPERIMENTAL PROGRAM	233
VI	DESIGN REQUIREMENTS	261
	A. Space Station Characteristics	261
	B. Experimental Facilities Requirements	309
	C. Communications and Data Handling	326
	D. Data Handling Subsystem	329
	E. Biomedical and Human Factors Data Characteristics	352
	F. Biomedical and Human Factors Laboratory	362
	G. Optional Facilities	406
VII	TRADE-OFF ANALYSIS	411
VIII	RECOMMENDATIONS	421
	REFERENCES	423

ILLUSTRATIONS

Figure		Page
1	Project Organization	iii
2	Internal Centrifuge RPM Requirements	7
3	Re-Entry Deceleration Time Histories	9
4	Re-Entry Deceleration Characteristics	10
5	Comparison of Cumulative Anticipated Doses with Industrial Recommended Maximum Permissible Doses	62
6	Relationship of Accumulated MPD and Age	63
7	Thermal Requirements for Comfort Tolerance	85
8	Heat Transfer Equation	124
9	Muscle Dynamometer	129
10	Relationship of Subjects to t Values	236
11	Crew Time Available for Experimental Program	240
12	Extended Apollo Configurations	264
13	MORL Artificial Configuration - Dumbbell Concept	267
14	Three-Radial Module Space Station	268
15	Hexagonal Torus Space Station	270
16	Spacecraft Volume Requirements	272
17	Volume - Small Space Stations	273
18	Volume - Large Space Stations	274
19	Experimentation Payload Available - Small Space Station	277
20	Experimental Payload Available	278
21	Application of Space Power Systems	282
22	Comparison of Power Systems at 5-Kilowatt Output	283
23	Power Available for Experimentation	291
24	Effect on Mission Duration of Expendable Weight per Man/Day	293
25	Effect of Mission Duration on ECS Power per Man	295

Revised 3 January 1964

ILLUSTRATIONS (cont'd)

Figure		Page
26	Effect of Mission Duration on Fixed Weight per Man of ECS and Power Systems	296
27	Effect of Mission Duration on Fixed Weight of ECS and Power Systems	297
28	Orbital Lifetime for Various Space Station Configuration	303
29	Effect of Shielding on Dose Rate in Artificial Radiation Belt	306
30	Internal Centrifuge - Schematic Diagram	313
31	Internal Centrifuge Parameters	315
32	Resonant Condition Acceleration - Various Gravity Simulation Devices	318
33	Amplification Factor for Various Gravity Simulation Devices	319
34	Space Station Communications and Data System	327
35	Data Handling System Block Diagram	330
36	Narrowband Data Unit - Block Diagram	343
37	Wideband Data Handling Group - Block Diagram	344
38	System Clock - Block Diagram	346
39	Command Assembly - Block Diagram	348
40	Biomedical and Human Factors Laboratory	363
41	Biostat Monitoring Console - Block Diagram	368
42	Belt-Pack Mission Safety Measurement System	371
43	Psychomotor Performance Testing - Block Diagram	376
44	Psychomoter Performance Tester	380
45	Relationship of Confidence to Duration (Months)	417

TABLES

Table		Page
1	Acoustic Noise: Frequency Range 5 to 10,000 CPS for Typical Boosters	5
2	Continuous (Hash) Level (3-axis) for Typical Boosters	6
3	Gas Generation in a Space Station Resulting from Electron and Bremsstrahlung Radiation	18
4	Relationship of Bodily Functions and Structures	30
5	Environmental Factor: Weightlessness	32
6	Effect of Weightlessness of Heat Production (Calories)	38
7	Environmental Factor: Dynamic Factors	51
8	Effect of Frequency of Vibration on Specific Physiological Functions	54
9	Environmental Factor: Radiation	61
10	Factor by which Anticipated Doses Exceed the Recommended Occupational Limits	64
11	Relative Radiosensitivity of Blood Cells and Precursors (65)	66
12	Environmental Factor: Cabin Atmosphere	72
13	Environmental Factor: Contaminants	77
14	Atmospheric Contaminants	79
15	Environmental Factor: Thermal Environment	83
16	Interrelationship of Main Factors which determine heat Exchange between Man and Environment Under Space Station Conditions	84
17	Environmental Factor: Circadian Rhythms	88
18	Environmental Factor: Psychophysiological Factors	94
19	Summary, Medical Significance	97
20	Means of Medical Significance - Function	98
21	Means of Environmental Response	99
22	Physiological Functions and Measurements: A Priority Rating	102

TABLES (cont'd)

Table		Page
23	Medical History Symptons	157
24	Medical Examination Signs	160
25	Ratings of Anticipated Effects of Environment on Man's Performance	168
26	Reliabilities of Various Measures of Tracking Performance in a Complex Tracking Task After "Considerable Practice"	189
27	Test, Retest Reliabilities, Validities and Factor Loadings of Tests Requiring Performances Related to Tracking	190
28	Equipment Listings and Volume, Dimensions, Power, and Weight Estimates Based Primarily on "Off-the-Shelf-Equipment"	229
29	Experimental Plan 1 - Static Testing with Safety Measures	242
30	Experimental Plan 2 - Static and Dynamic Testing with Safety Measurements	243
31	Experimental Plan 3 - Static and Dynamic Testing with Safety and Class 1 Measurements	244
32	Experimental Plan 4 - Static and Dynamic Testing with Safety and Class 1 Measurements	245
33	Experimental Plan 5 - Static and Dynamic Testing with Safety, and Class 1 Measurements	246
34	Crew Rotation Schedule, 4-6 Non-Rotating Vehicle with Centrifuge	248
35	Crew Rotation Schedule, Co-Incidental Plan 12-Man Non-Rotating Vehicle with Centrifuge	249
36	Crew Rotation Schedule, Sequential Plan 12-Man Non-Rotating Vehicle with Centrifuge	250
37	Crew Rotation Schedule, 24-Man Non-Rotating Vehicle with Centrifuge	251
38	Measurement Schedule	254
39	Comparison of Booster Capabilities	263
40	Scientific Payload Summary	280
41	Power System Characteristics and Applications	284
42	ECS Power Requirements and Experimentation Balance	289

TABLES (cont'd)

Tables		Page
43	Comparison of Expendables	298
44	Vehicle and Orbit Decay Parameters	302
45	Orbit Parameters	305
46	Mode 1. Narrowband Recorder: Data Link A 6 Bits/Word	332
47	Weight, Size and Power of Data Handling Subsystem	333
48	Mode 2. Wideband Recorder: Data Link B 6 Bits/Word	335
49	Data Management Recorder Characteristics	337
50	Wideband and Narrowband Characteristics	340
51	Psychological Data and Information Management Data Quantities: per Subject-per Test Administration (Non-Optimized Coding)	356
52	Data Characteristics of Biomedical Measurements	361
53	Set Up Time and Solution Time for Psychomotor Performance Test Panel Tasks	375
54	Psychomotor Performance Test Panel Components	381
55	Power, Weight, and Volume Estimates for Biomedical and Human Factors Laboratory	399
56	Space Station Design Requirements	405

SECTION I

INTRODUCTION

The successful flight of Gordon Cooper on May 15, 1963 brought to a close America's first-man-in-space program. Although the opportunities for medical studies were limited, some of the initial apprehensions concerning the unknowns of space have subsided. The concern that motion sickness, vertigo, or visual illusions would present serious problems to the crew has lessened since, of the ten astronauts, only Titov has experienced such disturbances to date. However, these assurances should not permit a distraction from the major biomedical and human factors problems that will have to be met with future space missions. One can recall that the Wright brother's early flights were without the problems of G loads, hypoxia, vertigo, dysbarism, and decompression. Even the brief flight experiences to date of both the American and Russian programs have focused on a number of potentially disabling problems. The effects of weightlessness on the cardiovascular and musculoskeletal systems will require clarification and a determination of methods to overcome any deconditioning which may occur. Titov's susceptibility to disturbances of equilibrium is an example of a common biological phenomenon - individual variability - that should not be forgotten in these early days of space flight. Multibillion-dollar programs can be delayed or redirected because of judgments based on fragmentary experience. The research design for collecting adequate data on which to make such judgments is an important operational and management responsibility.

The primary objective of this study is to determine which biomedical and human factors measurements must be made aboard a space station to assure adequate evaluation of the astronaut's health and performance during prolonged space flights.

The study has employed, where possible, a medical and engineering systems analysis to define the pertinent life sciences and space station design parameters

and their influence on a measurement program. The major areas requiring evaluation in meeting the study objectives include a definition of the space environment, man's response to the environment, selection of measurement and data management techniques, experimental program, space station design requirements, and a trade-off analysis with final recommendations.

The space environment factors that are believed to have a significant effect on man were evaluated. This includes those factors characteristic of the space environment (e.g. weightlessness, radiation) as well as those created within the space station (e.g. toxic contaminants, capsule atmosphere). After establishing the general features of the environment, an appraisal was made of the anticipated response of the astronaut to each of these factors. For thoroughness, the major organ systems and functions of the body were delineated, and a determination was made of their anticipated response to each of the environmental categories. A judgment was then made on the medical significance or importance of each response, which enabled a determination of which physiological and psychological effects should be monitored. Concurrently, an extensive list of measurement techniques and methods of data management was evaluated for applicability to the space station program. The various space station configurations and design parameters were defined in terms of the biomedical and human factors requirements to provide the measurements program. Research design of experimental programs for various station configurations, mission durations, and crew sizes were prepared, and, finally, a trade-off analysis of the critical variables in the station planning was completed with recommendations to enhance the confidence in the measurement program.

SECTION II

DEFINITION OF THE ENVIRONMENT

A. INTRODUCTION

The complete environment of the experimental space station mission includes all factors and events from launch to re-entry and return to earth from an orbit inclined approximately 30° to the equator at an altitude of 200-300 nautical miles. The major environmental factors are categorized as: weightlessness, dynamic factors, ionizing radiation, cabin atmosphere, contaminants, thermal environment, circadian rhythm, and psychophysiological factors.

B. WEIGHTLESSNESS

Weightlessness involves the attainment of a state in which the net accelerative forces acting on a body within a given frame of reference are zero relative to that frame of reference. Orbiting vehicles move around the earth in Keplerian trajectories, which may be considered as paths of free fall. Such trajectories may involve constant speeds, as in the case of perfectly circular orbits, or may involve great changes in speed, as occurs in highly elliptical orbits and in bodies falling straight toward the earth. In all cases, however, within the framework of reference of the body or vehicle there is no net accelerative force or inertial force, and the condition of weightlessness is attained.

Relative to the earth's frame of reference, all free-fall paths involve accelerated motion. In elliptical orbits, there are both normal and tangential components of the acceleration, but in a perfectly circular orbit, only the normal component is present. It is sometimes stated that in a circular orbit the centrifugal force balances the force of gravity, and that it is because of this balance that weightlessness occurs. Such a balance is not required, however, either for an orbit to be maintained or for weightlessness to occur. In an elliptical orbit,

the centrifugal force is less than gravity at apogee and is greater than gravity at perigee. Although producing weightlessness, Keplerian orbits thus do not represent exactly the same state as would truly zero gravity. The earth's gravity is still very much present and, indeed, is the force responsible for maintenance of orbit. The only way to escape from gravity is to attain such a distance from large bodies that their attraction, which diminishes by the square of the distance, becomes negligible.

Objects in a weightless state possess all the properties attributable to mass, but weigh nothing. They resist acceleration, but, if accelerated, acquire momentum which is the resultant of the applied force vectors. In actuality, an active astronaut is subjected to a complex, low magnitude G vector, resulting from bodily movements as well as accelerative forces within the body (e.g. heart action). Body fluids will act free of hydrostatic effects and convection currents, and gas fluid interfaces will be a function of surface tensions rather than density or weight. In weightlessness, the body will be in a state of equilibrium in which characteristics such as shape, volume, and pressure are determined only by its structural constitution and motion, free of the customary G forces.

C. DYNAMIC FACTORS

Dynamic factors include such considerations as acceleration (and deceleration) of launch, re-entry, impact and centrifugal force ("artificial gravity"), vibration, noise, and coriolis forces.

The launch into orbit of the spacecraft is characterized by the simultaneous exposure to multiple G's or acceleration, externally generated acoustic noise, and mechanical vibration environments. The total exposure time from liftoff to orbit injection is approximately 600 seconds, but the most severe combination of effects occurs during the first 100 seconds.

The acceleration profile is one of continuously increasing magnitude during each booster stage firing, with the most severe being the first stage. Boosters, ranging from the Saturn 1 with an initial thrust of 1.5×10^6 pounds to the Saturn V

with an initial thrust of 7.5×10^6 pounds, will generate g forces ranging from highs of 3.2 to 7.1 during the first 200 seconds of boost.

During first stage firing, intense noise and mechanical vibration inputs are experienced. There is a continuous "hash" level, with three time phases of peak excitation. Mechanical vibration appears in all three phases, and acoustic noise is evident in the first two phases. The three periods are: (1) the first few seconds after ignition, (2) the transonic through maximum dynamic pressure period of approximately 20 seconds, and (3) pre-burnout of the stage, approximately the final 10 to 15 seconds of stage thrust. For the third period, the excitation imposed is only vibratory because, in all cases, flight is then above the sensible atmosphere and acoustic energy cannot be generated.

During liftoff, the noise spectrum at the payload has a wide band frequency between 5 and at least 10,000 cps. In terms of overall sound pressure levels the decibel level increases with booster thrust, although the predominant frequency tends to reduce with increasing booster thrust.

The noise spectrum during the transonic through maximum g flight phase exhibits a somewhat higher overall sound pressure level than at liftoff and a higher predominant frequency in the same frequency content. The continuous "hash" level is approximately 100 db for all boosters. See Table 1.

TABLE 1. ACOUSTIC NOISE: FREQUENCY RANGE 5 to 10,000 CPS FOR TYPICAL BOOSTERS

Booster	Liftoff		Trans Max G	
	External Overall db	Internal Overall db	External Overall	Internal Overall
Titan II	135	123	140	125
Titan III	145	130	150	135
Saturn 1	143	130	148	133
Saturn 1B	143	130	148	133
Saturn V	148	135	163	145

The vibration environment imposed on the complete spacecraft is random in nature, with frequency content up to 3,000 cps. The excitation may be longitudinal and transverse simultaneously. In the complex wave random spectrum, occasional pure sinusoid-type oscillations are known to exist. This characterization of the vibration is applicable to the liftoff and the transonic-max g phases. At burnout, the input is essentially sinusoidal, at less than 50 cps, and in the longitudinal (thrust) direction.

The quantitative vibration data listed in Table 2 for 1 - 50 cps and for 50 - 3,000 cps have been estimated from spacecraft component design spectra. Crew station and seating vibration attenuation provisions may effectively screen out various frequency bands by support isolation provisions.

TABLE 2. CONTINUOUS (HASH) LEVEL (3-AXIS) FOR TYPICAL BOOSTERS

		Frequency	
Booster	Flight Time	1 - 50 cps	50 - 3,000 cps
Titan II	335 sec	± 0.5 g	± 0.5 g
Titan III	570 sec	± 0.75 g	± 0.75 g
Saturn 1	620 sec	± 0.5 g	± 2.5 g
Saturn 1B	570 sec	± 0.5 g	± 2.5 g
Saturn V	540 sec	Not known	Not known

Toward burnout, predominantly low frequency longitudinal vibration, which derives from pulsations in the liquid fuel system and the combustion chamber, is experienced. This is a continuous feature of the burnout stage, referred to as "chuffing," but it does not reach the spacecraft until the fuel tanks are nearly depleted and fuel damping effects are minimal. This phenomenon has been repeatedly evidenced in "Thor" and "Atlas" launches, and is currently one of considerable concern to the Gemini project, since Titan II also exhibits this characteristic excitation. It is believed the same feature is revealed in the static firings of the F-1 engine and fuel system for the Saturn V.

Under conditions of weightlessness for prolonged durations, artificial gravity (centrifugal force) may be utilized for diagnostic (predictive) and/or therapeutic purposes by rotation of the entire station or use of an onboard centrifuge.

The relationship of artificial gravity and RPM for various diameters of space station cylindrical configurations is shown in Figure 2. For example, a centrifuge at 30 RPM in a 220" MORL type space station configuration simulates 2.4 g.

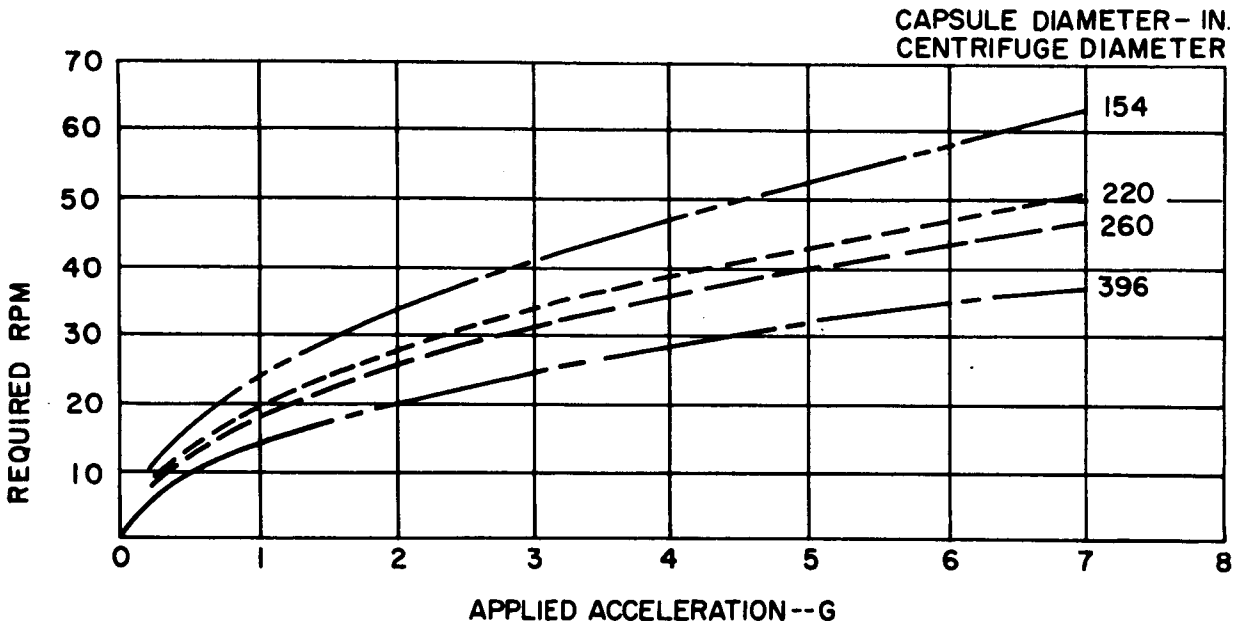

Figure 2. Internal Centrifuge RPM Requirements

For direct descent ballistic or nearly ballistic trajectory vehicles such as Mercury, Gemini, and Apollo, the elapsed time from entry initiation at 400,000 feet to approximately 50,000 feet is of the order of 4 to 5 minutes.

Time plots of the nominal onset and decay of the deceleration (g) forces are shown in Figure 3 for two cases. The histories shown for the ballistic (Mercury type) re-entry from earth orbit and lunar return are typical of what might be expected. However, they are conservative since some small lift/drag ratio is expected to be available with these capsules.

Reference 1 is a parametric study of entry profiles for glide and ballistic vehicles entering at speeds up to 35,000 fps. The lunar orbit return deceleration time history was derived from Ref. 1 for -5° initial entry angle. Figure 4 shows for re-entry from earth orbit the corresponding deceleration parameters for several values of lift/drag ratio and initial re-entry angle. This curve indicates the effect of capsule lift in lowering deceleration load factor. For a lift/drag ratio of 0.5, which is possible with an Apollo re-entry vehicle and 2 degree re-entry angle, a maximum deceleration load factor of only 2.5 is indicated.

Concurrently with these g forces, acoustic noise and vibratory excitations will exist. Although no specific information is available, it is estimated that the noise and vibration are significantly less severe than during launch.

D. IONIZING RADIATION

Manned spacecraft orbiting at an altitude of 200 to 300 nautical miles and in an orbit inclined approximately 30° to the equator will be in a radiation environment consisting primarily of electrons injected into the earth's magnetic field by high altitude nuclear detonations. Although the skin of the space station will prevent many of the electrons from penetrating to the interior, the deceleration of the electrons caused by their interaction with the skin of the space station will give rise to bremsstrahlung radiation, which will penetrate more easily than the electrons. Other components of the space radiation environment will include galactic cosmic radiation, geomagnetically-trapped electrons and protons in the

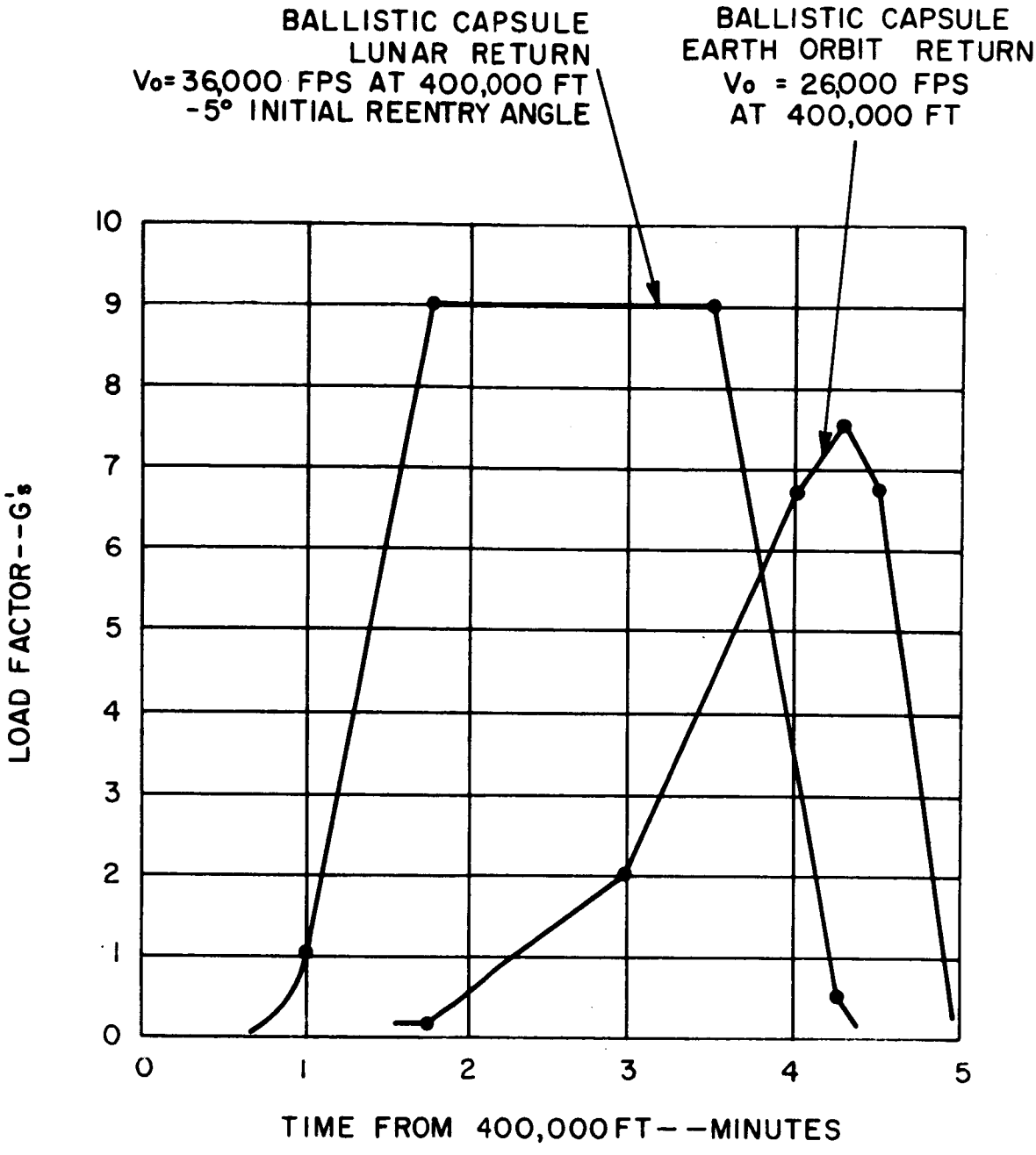

Figure 3. Re-Entry Deceleration Time Histories

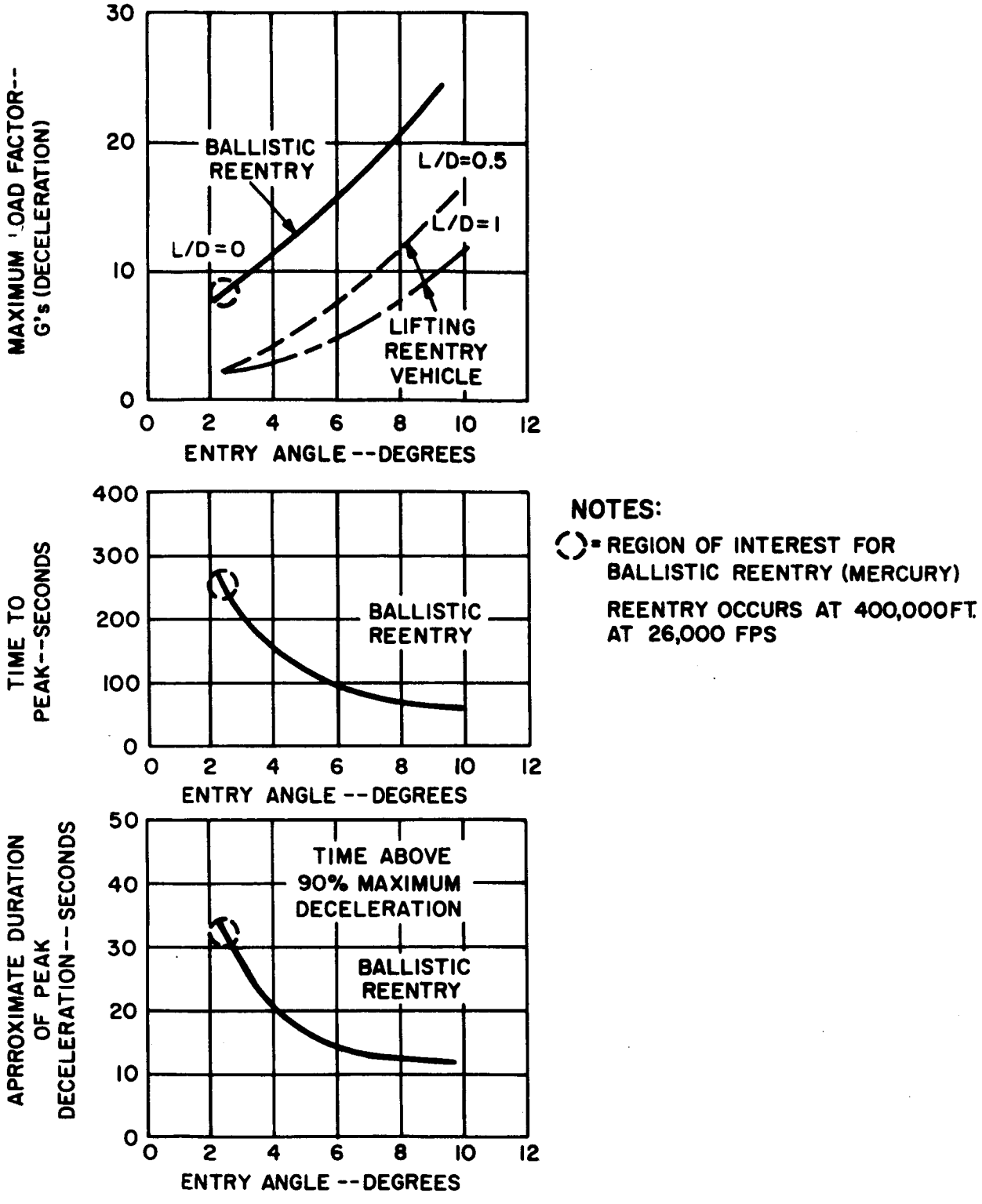

Figure 4. Re-Entry Deceleration Characteristics

lower parts of the inner Van Allen belt and, on occasion, solar flare proton bursts.

Primary cosmic rays in the vicinity of the Earth consist mainly of protons (approximately 85%) and alpha particles. Nuclei of other elements make up less than two percent of the cosmic radiation. The average energy of the primary cosmic radiation is about 4 Bev/nucleon [2]. The omnidirectional intensity of all cosmic ray particles in the vicinity of the Earth has varied between approximately 1.8 and 3.7 particles/cm^2-sec over an 11-year period, the low point coinciding with the time of maximum sun spot activity, and the time of maximum flux corresponding to the minimum sun spot activity. The very dense ionization tracks produced in tissue by heavy nuclei in cosmic radiation may cause specific biological effects, because the local tissue dose within these tracks is high even though the whole-body dose is low [3]. The biological effects of these heavy nuclei have not been investigated experimentally because it is not yet possible to accelerate the nuclei to cosmic ray energies [3]. Recently, deuterons have been used to simulate the ionization pattern of heavy nuclei, and results indicate that the hazard due to heavy nuclei may not be severe [4]. Thus, in spite of the large energy carried by the cosmic rays, the effect on the total dose rate will be small, since the cosmic ray flux is small compared to that of the geomagnetically-trapped radiation.

The ambient electron spectrum in the artificial belt has been studied by means of measurements in earth satellites; the results indicate a close approximation to a fission electron spectrum [5,6]. Hess [5,6] has developed a machine code for calculating the integrated flux of electrons traversed by an orbiting vehicle. These calculations indicate that a vehicle orbiting with a perigee of 298 nautical miles and an apogee of 320 nautical miles, and with an inclination of 33°, would have encountered an electron flux of 6.8×10^{11} electrons per cm^2-day. According to Hess [6], the dose rate from this electron flux is 27,000 roentgens per day. This result is based upon data obtained during the first month after the high altitude nuclear explosion. Since that time the belt has been found to have partially decayed. The electron fluxes for this altitude, as of November 1962, are believed to lie between 3×10^{10} and 5×10^{11} electrons per cm^2-day.

Most of the electron flux is encountered by the vehicle during traversal of the anomaly in the Earth's magnetic field, which occurs over the South Atlantic between South America and Africa. For a typical orbit with an inclination of 30°, a period of 92 minutes, and a 23° per orbit nodal regression, 4 to 6 vehicle passes penetrate the radiation belt in any one day.

Shielded areas aboard the space station are likely to have approximately 8 - 10 pounds of shielding per square foot. At an altitude of 260 nautical miles, 10.5 pounds/ft^2 reduces the electron dose rate to .1 to .2 rad/day. At 140 nautical mile altitude, eight pounds of shielding/ft^2 reduces the dose rate to somewhat less than 0.1 rads per day.

Electron bremsstrahlung dose rates emerging from shields of 9 lbs/ft^2 are about an order of magnitude less than that due to the electrons. Since the electron dose drops more rapidly with increasing thickness than does that due to bremsstrahlung, at larger shield thicknesses bremsstrahlung will contribute larger fractions of the total dose.

Geomagnetically-trapped protons will result in a minimal radiation exposure for the space station crew members. The proton dose rates at an orbital altitude of 150 nautical miles is less than 10^{-3} millirads/day for shield thicknesses greater than 6 lbs/ft^2 of aluminum.

For inclinations of 45° to the geomagnetic equator, and for altitudes below 270 nautical miles, the solar flare proton cutoff energy obtained from the Störmer theory is approximately 2 Bev [(3)]. Since most of the protons from a solar flare have energies less than 2 Bev, most of the potential dose is deflected from the space station. On the other hand, giant solar flares of the type occurring on February 23, 1956 produce a large number of relativistic protons, which can penetrate to the space station. The dosage, at operational altitudes, would be $\sim$ 100 rads.

E. CABIN ATMOSPHERE

The space station atmosphere is one of the most critical environmental factors in the space station as well as in the design of manned space stations. It will affect the structure of the space station, and possibly the safety and performance of the crew members, thus affecting the likelihood of mission success.

The most important single constituent in the gaseous atmospheres is oxygen. In a pure O_2 environment, the oxygen available to the body; i.e., alveolar partial pressure, may be calculated from the following equation:

$$P_{A_{O_2}} = P_B - (P_{A_{CO_2}} + P_{A_{H_2O}})$$

where P_B is the barometer pressure, $P_{A_{CO_2}}$ is the alveolar partial pressure of carbon dioxide, and $P_{A_{H_2O}}$ is the alveolar partial pressure of water.

Assuming a normal $P_{A_{O_2}}$ of 100 mm Hg,

$$P_B = 100 + 40 + 47 = 187 \text{ mm Hg.}$$

Hence, this should be considered the minimum total pressure for design purposes if no inert gas is present in the atmosphere.

Although any atmosphere capable of supporting life will support combustion, the combustion rate increased rapidly with increased oxygen partial pressure, particularly between 150 and 250 mm Hg, and is appreciably decreased with the addition of an inert gas. Consideration of the fire hazard is of paramount importance in view of the small living space and limited escape opportunities and fire fighting equipment possible in space stations. Experience during the Gemini validation program suggests that it will be extremely difficult, if not impossible, to extinguish a fire in a 5 psi pure O_2 environment by usual means. Compartmentation of larger space stations would allow for emergency decompression as a means of extinguishing the inferno and would afford protection after meteoroid

penetration. Flash blindness, burning, and over pressure are increased during meteoroid puncture with increasing oxygen partial pressure, and would probably be catastrophic in a pure oxygen environment.

Reduced total pressures and increased oxygen tensions will result in increased oxidative by-products and material outgassing, which will build up as a function of the mission duration, leakage rate, and efficiency of removal system. Increased oxygen pressures may result in increased effects of ionizing radiation. The magnitude of this increase is unknown. It would, therefore, appear desirable to maintain the oxygen partial pressure at sea level equivalents, and to have nitrogen present, at minimal amounts for physiological reasons, and at much larger quantities for physical reasons to reduce the fire hazard. Assuming that a nitrogen and oxygen mixture is selected for use in the space station, consideration must be given to the total pressure. Ideally, sea level air environment should be used to investigate the effects of weightlessness, so that the number of experimental variables is reduced. However, recreating a sea level air environment is neither simple (e.g., trace gases) nor, in the space environment, necessarily the optimum selection. Marked deviations from this norm should be considered with caution until adequate medical investigation or mission requirements warrant such a selection. Preferably, the space station's gaseous environment should be the same as the space vehicle's environment that will be used for interplanetary travel, thereby eliminating cabin atmosphere as a variable in predicting the effects of protracted space flight from experimentation on the manned earth orbiting station. With advances in the state-of-the-art in vehicular structures, booster capabilities, and assessment of decompression hazards, higher total pressures approaching 14.7 psia can probably be provided for space flight.

It would appear from these considerations that the gaseous environment of the space station will be a mixture of oxygen and nitrogen. The oxygen partial pressure will be between 160-170 mm Hg. Depending on weight penalties, the total pressure may be between 7.4 psia and 14.7 psia, with 11 psia an acceptable compromise. In view of the uncertainties concerning interplanetary cabin atmosphere, the capability of a variable total pressure between 7.4 and 14.7 psia

should be considered in the trade-off analysis of space station design requirements.

F. CONTAMINANTS

The crew requirements for long term habitability in a space vehicle are probably the most exacting challenge to the design engineer and environmental medical specialist. Although the physiological and comfort limits of temperature, humidity, and CO_2 are well defined, the chronic effects of high partial pressures of oxygen and/or the absence of nitrogen have not been adequately studied. In addition, the hazard of toxic contaminants increases with improved capsule sealing methods and flights of longer duration. Critical selection of materials, improved monitoring and control devices, and the determination of human tolerances to the recognized trace substances will be required.

Forty-seven compounds have been identified from analysis of the charcoal filters in the Mercury spacecrafts. Some of these compounds resulted from a thermal overload of a gyro system. Except for methane and carbon dioxide, compounds generated by the astronauts have not been identified. The U. S. Navy Research Laboratory, by using infra red spectroscopy and gas chromatography, has identified sixteen compounds, not including hydrocarbons from the atmospheres of Polaris submarines. In addition, they have isolated two-hundred type compounds similar to mineral spirits or oil-based paints.

Aerosols, 75% of which were due to smoking, reached a peak at 100 hours submergence at 0.3 - 0.5 micrograms/liter. The ions concentration peaks initially, then decreases and levels off. The increasing aerosol concentration picks up the ions and removes them.

Methods introduced to remove contaminants may become a source of contamination. Monoethanol amine used in a regenerative carbon dioxide removal system is quite toxic. Catalytic burners may incompletely decompose compounds with the formation of more toxic by-products especially if the temperature of the burner falls. In a recent simulation run, hydrogen developed in the sodium super oxide canisters due to an interaction of the sodium super oxide and the aluminum honeycomb structure of the canister.

A part of the environment of the space station consists of contaminant gases produced by space radiation effects on matter within the station. For the orbits considered here, the principal radiations penetrating the skin of the station are the electrons from the artificial belt and the electron bremsstrahlung produced by interaction of the electrons with the matter of the space station. The gas-evolving power of the electrons and the bremsstrahlung are considered equivalent from the standpoint of energy absorbed by matter; e.g., one rad of electron radiation is considered to be equivalent to one rad of bremsstrahlung.

Contaminant gas production problem via radiation may be considered in two parts: (1) gases produced by the effect of radiation on the gaseous atmosphere in the station, and (2) gases produced by the effect of radiation on organic materials in the station.

The radiation effects literature generally presents gas evolution data in the form of G values. The G value, in general, is the number of processes caused by 100 electron volts of energy absorbed. In the case of gas production, the G value is the number of molecules of gas produced per 100 electron volts of energy absorbed.

It is convenient to convert G values into units of moles per gram-rad. The conversion [(i)] shows that the numerical value of G is equal to the R_G, the gas production in 10^{-12} moles per gram-rad; that is,

$$R_G = 1.04 \times 10^{-12}\ G\ \frac{\text{moles}}{\text{gram-rad}}$$

(i) 1 rad = 100 ergs/gram; 1 eV = 1.6×10^{-12} ergs;

1 eV = 1.6×10^{-14} (gm-rad)

$$\frac{\text{gas production}}{\text{unit energy}} = \frac{\text{G molecules}}{100\ \text{eV}} = \frac{\text{G molecules}}{1.6\times10^{-12}\ \text{gm-rads}}$$

$$= \frac{\text{G moles}}{9.63 \times 10^{11}\ \text{gm-rad}} = 1.04 \times 10^{-12}\ \frac{\text{G moles}}{\text{gm-rad}}$$

An estimate of gas generation in a space station is present in Table 3.

The estimated weight of organic materials within the cabin of the space station is 1/4 of one percent of the weight of the station. A lower limit of the weight of a space station is 20,000 pounds; therefore, some 50 pounds of organics may be aboard. The estimated lower limit of the air volume of a station is 350 cubic feet. The last three rows of column 5 of Table 3 are obtained by multiplying entries of column 4 by the total weight of the organics in grams [(i)], and dividing by the number of moles of air in the cabin atmosphere. Since ozone and nitrogen oxides are generated primarily by irradiation of the breathing atmosphere, the concentration of ozone and nitrogen oxides is independent of the weight of organics; also, the equilibrium concentration of these gases is independent of the volume of breathing atmosphere [(ii)]. The equilibrium concentration depends upon the competing processes of production rate and decomposition rate.

The environment in a multi-man space station will have many different types of microorganisms from many different sources. The difference in environment of the space station as compared to the usual earthly environment will substantially alter the ecology of the microorganisms and, in turn, the microorganisms will affect living organisms and non-living materials to an altered extent.

The various microorganisms differ with respect to their size and ability to adapt to environmental conditions. Certain bacteria and, in general, yeasts and molds survive outside their normal habitat quite well. But bacteria indigenous to man usually die outside the body. Also, the viruses and rickettsiae generally

---

(i) This procedure overestimates the gas production since it assumes that each material considered weighs 50 pounds, whereas all organics together weigh about 50 pounds.

(ii) The number of ozone and nitrogen oxide molecules is proportional to the atmospheric volume, but the computation of concentration requires division by the volume.

TABLE 3. GAS GENERATION IN A SPACE STATION RESULTING FROM ELECTRON AND BREMSSTRAHLUNG RADIATION

1 Contaminant Gas	2 Target	3 Gas Production Per Absorbed Energy (10^{-12} moles/gm-rad)	4 Specific Gas Production Rate[i] (moles/gm-yr)	5 Concentration After 1 Year[ii] (ppm by volume)	(ppm by weight)	6 Maximum Allowable Concentration[iii] (ppm by weight)
Ozone (O_3)	Aviator's Oxygen (O_2)	9	(2×10^{-10})[iv]	(0.6)[iv]	(1)[iv]	0.1 - 1
Nitrogen oxides	20-300 ppm N_2 in O_2		(2×10^{-10})[iv]	(0.6)[iv]	(1)[iv]	10 - 25
Hydrogen (H_2)	Polypropylene ($-CH_2CH=CH-$)	2.5	1.2×10^{-6}	64	4	2.8×10^5[v]
Methane (CH_4)	Polypropylene	0.08	3.9×10^{-8}	2.1	1	10,000
Carbon Monoxide (CO)	Polypropylene	0.028	1.5×10^{-8}	0.8	.7	100
Unspecified gases	Butyl rubber[vi]	0.5	2.5×10^{-7}	13	-	-
Methane (CH_4)	Tertiary butyl benzene[vii]	0.06	3.0×10^{-8}	1.5	.8	10,000

(i) For an absorbed dose rate = $4.6 \times 10^{+5}$ rads per year.
(ii) Assumes no gas is retained in the generating material and that none is lost by leakage or removal by contaminant control.
(iii) N.J.Sax, "Handbook of Dangerous Materials," Rheinhold Publishing Corporation (1951)
(iv) These values are based on extrapolation of experimental data. They represent an equilibrium between formation and decomposition processes.
(v) Lower explosive limit in air. Gas is not toxic.
(vi) Typical elastomer
(vii) Typical alkyl aromatic

do not live outside the body of host animals. Sporulation makes some microorganisms resistant to extreme conditions of heat, dryness, radiation, and other unfavorable environmental conditions in which they can survive. Later, in more favorable conditions, development to normal growth form occurs.

With high concentrations of oxygen, the facultative anaerobes are likely to be inhibited, and it is also possible that certain aerobic microorganisms may not flourish. One extreme effect of other than a natural earth-type atmosphere may be to enhance conditions for mutation of the microorganisms. This possibility would be especially enhanced on long missions. Such mutations might significantly increase the pathogenicity of the microorganisms with respect to man.

Plants aboard space stations will produce gases as a result of the active metabolism, compounds which may volatilize into the atmosphere, and plant particles. There may be associated microflora and other organisms on the external plant surfaces or within the plant.

Nearly all plants produce ethylene in small amounts (on the order of a few parts per million). They produce numerous other volatile compounds, which are, in many cases, specific to a particular plant species. Presence of the compounds is frequently detected by odor. Many, if not all, food flavor compounds are in this group. At warm temperatures, some of the shorter carbon-chain elements volatilize from the surface of the aerial portion of the plants.

Plants may lose small portions or structures into the air. There are two groups of microscopic parts which are important: (a) trichomes (hairs), and (b) pollen. Pollen or trichomes, or a combination of both, may be an irritant to man unless special attention is given to the best choice of species for the space station.

The presence of microflora on the surface of the plant may affect the environment, but very little is known about the normal plant surface microflora. Other possible atmospheric contaminants might arise from benign fungi which, upon fruition, would produce spores which might be harmful to man. The presence of

virus entities in plants should not be overlooked. Viruses can be hazardous by causing the death of the plant. The effects of plant viruses on man are unknown.

G. THERMAL ENVIRONMENT

Space vehicles are affected by the thermal factor at pre-launch, launch, and in orbit, with the main burden of effect occurring while in orbit and during re-entry.

Conditions at pre-launch affect the thermal control surfaces of a spacecraft in a thermal environment which is passively controlled. Any damage or deterioration of the thermal control surfaces will cause predicted temperatures during orbit to be in error. Such factors as atmospheric exposure, fingerprints, and dirt can deteriorate these surfaces for thermal control purposes.

When a space vehicle enters the ascent phase of launch, it is exposed simultaneously to aerodynamic heating, pressure forces, and vibration, all of which produce heat. Of these factors, aerodynamic heating is the most significant factor to consider for thermal control purposes. The exact temperature history of a given vehicle will depend primarily on ascent velocity, altitude, vehicle geometry, and vehicle material properties.

The energy sources which influence the temperature of a space station in orbit are divided into external and internal sources. The external energy sources are further subdivided into two main categories. One is the energy received from remote sources, and the other is aerodynamic heating and meteoric impact.

The sun emits electromagnetic (wave lengths ranging from 1 to 100,000 Angstroms) and corpuscular radiation in all directions. Most of the radiation is in the visible and infrared spectrum; the energy radiated in x-ray and ultraviolet bands is only an insignificant portion of the total solar energy. This energy, however, may affect surface coatings on spacecraft and degrade thermal control properties.

In the vicinity of the Earth, the solar flux density, or the Earth's solar constant is approximately 444 ± 13 BTU per hour-square foot. The temperature of

the Earth is an equilibrium temperature maintained between the Earth, its atmosphere, and the solar irradiation which keeps the Earth's internal energy constant. To determine the effect of terrestrial radiation on the heat balance of a space station, it is important to establish the amount of this energy which will be intercepted by the spacecraft. This depends on the space station's configuration and external shape.

A fraction of the total solar radiation received by the Earth is returned to space by scattering and reflections in the Earth's atmosphere and by reflection from clouds and the Earth's surfaces. The amount of solar energy reflected is a function of the terrain, cloud average, optical thickness of the atmospheric gases, the sun elevation angle, and the radiation wave lengths.

In order to compute the amount of reflected solar radiation intercepted by a spacecraft, the sun elevation angle, β , (the angle the sun makes with the vehicle radius vector) must be included in the analysis. This consideration complicates the problem over the case of terrestrial radiation, and a general, closed-form, analytical solution is not available except for special cases.

The thermal effect of planetary, lunar, and cosmic radiation on an earth orbiting space station is negligible.

Any solid surface in space such as the skin of a space station, is subjected to the impact of meteoroid particles. The resultant effects can be classified either as punctures or as surface friction and erosion. The latter would disturb the thermal balance on the space station by altering the surface characteristics. Generally, meteoroid velocities range from 40,000 to 100,000 ft. per second. It can be calculated that the heat input caused by the impact energies is approximately 6.4×10^{-7} BTU per hour per square foot, which is 1.43×10^{-9} of solar radiation.

If the orbits of a space station pass through the upper layers of the Earth's atmosphere then the space station will be subjected to significant aerodynamic heating. This type of heating is appreciable, for example, at an altitude of

400,000 feet above the Earth and at a velocity of 25,000 feet per second. In this case, the free molecular convective heat flux is about 1,100 BTU per hour per square foot. At altitudes above 500,000 feet, the heating rapidly approaches zero.

Internal energy sources that generate heat within a space station include the electric and/or electronic equipment, propulsion elements, power sources, and man. Internal heat generated within a vehicle can be dissipated by ejection of stored heat masses, by space radiators, or by radiation from the shell exterior surface.

Temperature control encompasses the necessary provisions for maintaining the space station, sections of it, and components at proper operating levels. The temperatures can vary from the extremely low values encountered with infrared detector environment and cryogenic liquids to the usual -65° to +165° F environment.

The temperature of special equipment, such as that which is used for inertial guidance, must be kept within narrower limits, usually between 40° and 90° F. Even more severe requirements are imposed by some types of reconnaissance equipment; temperature regulation within approximately 2° F and thermal gradients within a fraction of a degree are required for some types. For biological payloads, temperature of 70 to 80 ±1° should be maintained.

During re-entry, a vehicle approaching the Earth's atmosphere possesses a large amount of energy -- potential energy because of its position above the Earth's surface, and kinetic energy because of its velocity. At the edges of the Earth's relatively thin atmosphere, the kinetic form predominates. A satellite in a circular orbit 200 miles above the Earth's surface possesses a kinetic energy of about 13,000 BTU/lb (energy required to vaporize water - 1000 BTU/lb).

During the reduction of a vehicle's velocity in atmospheric entry, its kinetic energy is converted into thermal energy in the surrounding gas. Some of this thermal energy is transferred to the vehicle's surfaces, the energy conversion fraction depending on the vehicle's shape, velocity, and altitude.

The surface heating rate depends not only on this energy conversion fraction, but also on the rate of kinetic energy loss by the vehicle. For a lightly loaded lifting vehicle which decelerates slowly in the upper atmosphere, the surface heating rates will be low, in spite of the high conversion fraction, because of the slow deceleration and consequent low rate of kinetic energy loss by the vehicle. Both the maximum heating rate and the total heat load increase with the square root of the ballistic coefficient. The maximum heating rate also increases with increasing entry angle, and the total heat load decreases as the entry angle is increased.

Whether it is desired to minimize the peak heating rate or the total heat load depends on the penetration technique chosen. If one chooses to reject heat by thermal radiation, it is desirable to minimize heating rates and, hence, surface temperature. On the other hand, if heat is being absorbed by an ablating surface, it is desirable to minimize the total heat load.

The vehicle's structure and interior must be protected from surface heating during atmospheric entry. There are a variety of surface-protection or cooling systems which have been considered for this purpose. Generally, these systems involve (1) the absorption of incoming heat by the surface material through a temperature rise, a phase change, or a chemical change and/or (2) the rejection of part of the incoming heat by a mass efflux from the surface or by thermal radiation from the surface.

The rejection of the incoming heat by thermal radiation away from the hot surface is a very efficient technique.

H. CIRCADIAN RHYTHMS

The refraction of the sun's rays by the Earth's atmosphere and the finite diameter of the solar disk makes the day length at the equator constant at approximately 12 hours and 7 minutes. In the Northern Hemisphere, at the solstices, the total day-length variation in hours and minutes from the winter solstice of December 21 to the summer solstice of June 21 is zero at the equator; 1:47 at 15°, 3:52 at 30°, 6:50 at 45°, and 13:00 at 60°. At all latitudes, the day length is slightly

over 12 hours at the spring and fall equinoxes of March 21 and September 21, respectively.

Rate of change in day length is minimal during the summer and winter solstices, and is maximal at the spring and fall equinoxes. The rate at the equinoxes for 30° latitude is 14 minutes/week, or about 1%; for 45°, it is 26 minutes/week, or 1.8%; and for 60°, it is 44 minutes/week or, 3.1%. The corresponding monthly rates are 3.5, 6.3, and 11%.

There are few environments in which the temperature does not fluctuate in a somewhat random manner over at least ±5° C. Seasonal temperature follows a fairly consistent pattern of average change in relation to the day-length cycle.

The spectral energy distribution of sunlight is not greatly altered by either season or weather condition. The peak of energy of combined sun and sky radiation is in the visible portion of the spectrum. Much more significant are the very great changes in intensity. Clear sky intensities do not vary by more than a 2:1 ratio between the summer and winter solstices. However, during the winter, the average intensity is much less than that indicated, because of the preponderance of cloudy weather in much of the Temperate Zone. The peak value of light intensity at the summer solstice is approximately 1,000 ft-c which is about 100 mv/cm^2. During periods of heavy overcast, the intensity may fall to a few percent of the maximal clear sky value.

The rate of change of intensity during the twilight period is very great. The period extends for approximately thirty minutes beyond the time of actual disappearance of the solar disk. In a period of about twenty minutes at dawn, it rises from approximately 10 to 100 ft-candles.

The variation in daily sunlight striking an earth orbiting satellite depends primarily on the altitude of the space station and on the angle between the earth-sun line and the space station's orbital plane. If these two parameters are known, one can determine the fraction of each orbit that the satellite will be out of the "line of sight" of the sun and in the Earth's shadow. This space station "night-time" will vary greatly with time due to periodic changes in the angle between the

earth-sun line and the satellite orbital plane. These changes are determined by both the particular orbital path of the space station and by the seasonal changes in the position of the sun and Earth.

The proposed space station, orbiting at an altitude of 300 nautical miles with the plane of its orbit inclined 30° to the equator, will have a "night-time" which varies between a minimum of 27.1% and a maximum of 37% of each orbit. The actual variation throughout the year of the length of the space station "night-time" is much more difficult to calculate, as it depends on a combination of the actual motion of the station and of the seasonal motion of the Earth with respect to the sun. The season factor should introduce four overall cycles in the yearly variation of satellite "night-time." Data compiled on the Echo I satellite seem to bear out this assumption. The "time in shadow" curve goes through approximately four large humps in one year. A smaller variation is superimposed upon these humps, and this presumably is a function of the detailed satellite motion. For an exact description of the variation, detailed data on the space station orbit would be required.

Light is only part of the electromagnetic spectrum, the total energy flux streaming through space from many sources, but principally, as far as the Earth is concerned, from the sun. If there is a periodic effect due to diurnal variation in light, it is possible that similar phenomena exist for other energy bands of the electromagnetic spectrum, and that living organisms on Earth are coupled to these energy variations. In space, the bands of the electromagnetic spectrum applied on a 24-hour periodic basis will cycle in about 90-minute intervals.

Ocean tides occur four times a day; there are two high waters and two low waters. This is evidence for a periodic gravitational cycling with peaking four times a day and a rate of change in lunar gravitational attraction which must occur on each side of each peak. Circa-tidal rhythm has known effects on various forms of marine life. Other gravitational influences which are a function of the attraction of the Earth to the sun and to the other planets of our solar system are known.

In a perfectly circular orbit, the gravitational attraction of the orbiting vehicle to the Earth would be constant. However, an elliptical orbit would provide at least four peaks as the vehicle whirled around the Earth. These peaks, and their consequent effect, would be qualitatively different from gravitational effects on Earth. There would, of course, still be the gravitational influence of the moon, but with altered effect since the satelliting vehicle would cycle around the Earth in approximately 90 minutes. This effect must be considered in relation to the fixed point - static condition of an organism living on the Earth.

I. PSYCHOPHYSIOLOGICAL FACTORS

A manifold of variables has been used to describe other than physical forces in the environmental condition that will exist during space travel and aboard space stations. They include restricted volume living accommodations, confinement, isolation, social restriction, and reduced environmental stimulation. This diversity and diffuse conception indicates an unresolved complex of parameters, thought to be relevant restrictions of the environment, which influence sensory and perceptual experience.

The volume available for actual human habitability in space vehicles depends on crew size, mission, duration of mission, high utilization of available volume, and cost in terms of supporting systems.

When volume is related to duration of mission, a survey of typical space vehicle designs indicates that the 1- to 3-man vehicles represented by Mercury, Gemini, and Apollo provide about the same cubic footage/per man as an aircraft cockpit; namely, 50 to 75 cu ft per man for durations ranging from 1 to 14 days. Space station vehicles scheduled to carry from 4 to 24 men and estimated to stay aloft from three weeks to twelve months range in volume for human habitability from about 300 to 600 cubic feet per man. It should be noted that these volumes are projected on the basis of technical boost capability rather than on known requirements for human habitability for specific durations.

It is hypothesized that the type of mission of space station vehicles will probably affect volumetric requirements. It is usually postulated that relatively long-term missions will require more cubic footage per man than short-term missions, on the basis of the expectation that men must have more cubic footage on long-term flights for both living and working. Confinement in relation to space travel is a restricted volume living and working space in which a man must remain for the duration of his mission whether that space is a space suit, 50 cubic feet, or 600 cubic feet.

The Gemini, Apollo, and Small Space Station will have two to six-man crews. Large space stations may have from twelve to twenty-four crew members. Barring detrimental, uncontrollable effects of weightlessness, such crews will remain together under dimensionally restricted circumstances for durations ranging from 7 to 100 days; some of the crew may remain in space for a year. The crew members will have trained together and will know each other very well; that is, they will be able to predict each other's behavior with good probability. They will probably be a male crew in very good physical condition.

The crew members will live in accordance with a pre-planned sleep, rest, recreation, and work schedule. They will eat according to pre-planned menus, their specially prepared food requiring little or no preparation or cooking, aside from such operations as hydration and heating. They will partake of recreation in accordance with their inclinations and available facilities; undoubtedly, activities such as tapes, radio, and TV will be planned in order to entertain the crew. The color and illumination of crew quarters will be consistent with present knowledge on the subject.

Outside the cabin, an environment will exist in which the crew could not survive; there will be a high vacuum and extremes of temperature. They will look out into darkness except when they gaze directly at the sun or look at the Earth. This visual environment will vary regularly, so far as visual targets

are concerned, in approximately 40 to 50 minute cycles as the space station orbits around the Earth and goes from direct exposure to the sun into the Earth's shadow.

Inside the space station cabin, there will be the range of sounds of the machinery, the sounds of men working, and perhaps music. There will be zero g conditions, altered only when the limbs and body are flexed and position is changed, or when systematic g forces are programmed to counter the effects of zero g.

The space cabin environment will provide a complex of cognitive and sensory stimuli that will be highly consistent, and relatively unvarying in frequency and amplitude or scope, with respect to the interactions of the crew members, time, living and working cycles, food, quarters, cabin dimensions, and sensory stimuli. Sometimes, as in the case of zero g, there will be an absence of stimulation, a special case of consistent and unvarying environment.

In comparison to a normal earthly environment, the space station cognitive, including social and sensory environment, will be restricted in terms of the kinds of incidents which can occur, the frequency and scope or range of such occurrence, and the typical durations of such stimuli. Living from 100 to 300 miles away from the Earth, within the confined cubic footage of a space station, will generate an environment of isolation.

The sum of the major environmental factors and their interactions is the total space environment in which the manned orbiting space station will operate.

SECTION III

MAN'S RESPONSE TO THE ENVIRONMENT

In order to broadly evaluate man's anticipated response to the space station environment, the effects of the environmental factors is considered on each of twelve cardinal functions of the body. A functional rather than structural analysis of the body best met the objectives of the study. The arbitrary subdivisions of the major functions represent a workable compromise between comprehensiveness and simplicity. The relationship of anatomical structure to function is shown in Table 4 . The anticipated response to each environmental factor is tabulated at the conclusion of each section as:

O	unlikely
+	possible or unknown
++	probable
+++	definite

An additional objective was to make a judgment of the medical significance or importance of each of these responses tabulated as:

1) required data
2) desirable data
3) non-essential data

based on an evaluation of its importance in establishing man's ability to perform during protracted space missions. These evaluations represent the composite judgment of the project's multi-disciplined Life Sciences staff and medical consultants based on related experience, space flight data, and an analysis of the pertinent literature.

The response of these functions are rated and tabulated for each environmental factor as to primary or secondary anticipated response, medical significance and in the case of weightlessness, brief indication of the possible

TABLE 4 . RELATIONSHIP OF BODILY FUNCTIONS AND STRUCTURES*

MAJOR FUNCTIONS	STRUCTURE	Nervous System			Cardiovascular System		Blood & Reticulo-endothelial System		Respiratory System		Musculoskeletal System			Endocrine System						Digestive System		Urogenital System				Integument
		Central Nervous System	Peripheral Nervous System	Sense Organs	Heart	Vessels	Blood	Reticulo-endothelial System	Upper Respiratory	Lungs	Muscles	Bones	Joints	Pituitary	Adrenal	Thyroid	Parathyroid	Pancreas	Gonads	Gastrointestinal Tract	Accessory Organs	Kidneys	Lower Urinary Tract	Genital Organs	Skin
Psychological performance	Sensation	X	X	X	X	X			X	X	X	X	X						X	X	X	X	X	X	X
	Psychomotor Processes	X	X								X	X	X												
	Perception	X																							
	Higher mental processes	X																							
	Personality	X			X					X				X	X					X				X	X
Circulation	Pump				X		X																		
	Peripheral circulation					X	X																		
	Vasomotor control	X	X		X	X	X							X	X										
Respiration	Pulmonary	X	X						X	X															
	Blood						X			X															
	Tissue					X				X				X	X	X									
Thermo Regulation	Production	X									X				X	X					X				
	Storage						X				X					X									
	Dissipation	X				X	X			X															X
Neuromuscular activity	Motor coordination	X	X								X	X	X												
	Work metabolism ratio										X				X	X									
Skeletal support	Integrity										X	X	X				X								
	Movement	X	X								X	X	X												
Digestion	Ingestion	X																		X					
	Digestion																			X	X				
	Absorption																			X	X				
	Excretion	X																		X					
Metabolism	Carbohydrate													X	X	X		X		X	X				
	Fat													X	X	X				X	X				
	Protein													X	X	X			X	X	X				
Endocrine Balance	Stress	X												X	X										
	Reproduction	X																	X					X	
Fluid electrolyte balance	Ingestion	X												X				X		X					
	Regulation	X					X			X				X	X		X					X			
	Excretion	X												X	X		X					X	X		X
Hematological response	Formation							X														X			
	Activity						X							X	X										
	Destruction							X													X				
Immunological response	Tissue antibodies							X						X	X										
	Circulating antibodies						X	X						X	X										

Revised 3 January 1964

*NOTE

Since normal function requires integrity of all organ systems, only key Function/Structure relationships are indicated.

mechanism of response. These responses are not all predicted but do represent potential effects to be detected. No estimate is made of the degree of impairment. Finally, a summary of the medical significance of the functional response of the man to each of the environmental factors is tabulated to demonstrate their relative importance and to facilitate the application of the measurement program in studying singularly or in combinations the important psychological and physiological effects of space flight to be investigated.

A. WEIGHTLESSNESS (Table 5)

1. Physiological Aspects

The effect of weightlessness on man currently represents the greatest unknown for prolonged space flight. Perhaps man will adapt to weightlessness without difficulty. However, successful adaptation to weightless conditions may pose a problem during re-entry and after return to earth. A space adapted man may be less resistant to re-entry loads. Since the astronauts may have to be self-dependent for hours or days, after landing on the earth, the ability to re-adapt to a 1 g environment is essential. If deterioration or body de-conditioning does occur during weightlessness, the feasibility of preventing this deterioration or in reconditioning of the astronaut prior to re-entry must be determined. The use of procedures, such as constant or intermittent artificial gravity, exercise, tourniquet techniques, or drugs, for both diagnostic and therapeutic purposes should be evaluated.

Judgments on the possible effects of prolonged weightlessness are based on experimental observations and theoretical considerations. In water immersion studies in which the buoyancy simulates reduced weightbearing interpretation is difficult since it is not true weightlessness. There is also an increased tissue pressure and negative pressure breathing.

In bed rest studies, the cardiovascular system is closer to weightless conditions than it is in the upright condition. Assuming that there is a decreased muscular activity in space, this can be simulated under bed rest conditions.

TABLE 5 . ENVIRONMENTAL FACTOR: WEIGHTLESSNESS

Function		Medical Significance	Anticipated Response 1°	Anticipated Response 2°	Mechanism of Response
Psychological performance	Sensation	1	+++	+	Kinesthetic and vestibular sensations
	Psychomotor Processes	1	+++	0	Muscular coordination
	Perception	1	0	+++	Possibly illusions due to paucity and abnormality of sensory inputs
	Higher mental processes	2	0	+	Secondary to other performance effects
	Personality	1	0	++	Stress response
Circulation	Pump	1	+++	++	Reduced metabolic need, absence of hydrostatic pressure
	Pheripheral circulation	1	+++	0	Change of muscular activity absence of hydrostatic pressure
	Vasomotor control	1	+++	++	Pressure changes in aortic carotid and hypothalamic receptor areas
Respiration	Pulmonary	2	++	+	Mechanics of respiration, especially diaphragmatic aspect, decreased metabolic need
	Blood	2	0	++	Secondary to pulmonary effects
	Tissue	3	0	+	Secondary to pulmonary effects
Thermo-Regulation	Production	3	0	++	Change of metabolic need
	Storage	3	0	+	Change of body mass
	Dissipation	3	+	++	Absence of thermal convection
Neuromuscular activity	Motor coordination	1	+++	+++	Absence of weight-bearing load
	Work metabolism ratio	1	0	+++	Loss of efficiency due to poor muscular coordination and abnormal kinesthetic input
Skeletal support	Integrity	1	+++	++	Demineralization of bone
	Movement	2	++	+	Reduced stabilization of joints

Medical Significance	Anticipated Primary (1°) or Secondary (2°) Response
1. Required data	0 Unlikely
2. Desirable data	+ Possible or unknown
3. Non-essential data	++ Probable
	+++ Definite

Revised 3 January 1964

TABLE 5 . ENVIRONMENTAL FACTOR: WEIGHTLESSNESS (cont'd)

Function		Medical Significance	Anticipated Response 1°	Anticipated Response 2°	Mechanism of Response
Digestion	Ingestion	2	+++	0	Possible difficulty of gastric emptying, esophageal and gastric regurgitation
	Digestion	2	++	+	Changes of mobility and smooth muscle tone
	Absorption	3	0	+	Secondary to effect on digestion
	Excretion	2	++	0	Changes of smooth muscle tonus and responsiveness
Metabolism	Carbohydrate	1	0	+	Due to tissue breakdown
	Fat	3	0	+	Due to tissue breakdown
	Protein	1	0	+++	Disuse atrophy of muscles concerned with gravitational balance
Endocrine balance	Stress	2	++	0	Effect of hypodynamic state on hypothalamic, pituitary, adreno-cortical activity
	Reproduction	3	0	0	
Fluid electrolyte balance	Ingestion	1	0	++	Change of fluid distribution, decreased metabolic need
	Regulation	1	0	+++	Blood pressure changes in posterior pituitary and kidney
	Excretion	1	0	+++	Demineralization of bone, muscular atrophy
Hematological response	Formation	3	0	+	Decreased activity
	Activity	3	0	+	Decreased activity
	Destruction	3	0	+	Decreased activity
Immunological response	Tissue antibodies	3	0	+	Changed response of Reticulo-endothelial system
	Circulating antibodies	3	0	+	Changed response of Reticulo-endothelial system

Medical Significance:
1. Required data
2. Desirable data
3. Non-essential data

Anticipated Primary (1°) or Secondary (2°) Response
0 Unlikely
+ Possible or unknown
++ Probable
+++ Definite

Revised 3 January 1964

Keplerian trajectories in aircraft produce true weightlessness. However, these are for durations of less than 1 minute and it is difficult to apply conclusions to space station conditions.

Actual space flight gives the most appropriate information. At this time, data is limited as to number and time, and they are combined with effects of other space environmental conditions.

a. The following presents a summary of the results obtained from simulated and actual space flight:

(1) Higher Nervous Activity

There is some evidence that water immersion decreases need of sleep (7, 8, 9, 10). However, neither United States nor the Russian space flight data confirm this. As there is no clear relation between physical activity or metabolic activity, and the need of sleep, the effect of weightlessness on sleep is undetermined.

(2) Sensation

Many reports on disturbances of sensation in space (7, 11, 12, 13) are not confirmed. Cooper (14) after his flight showed bilateral conjunctivitis. Irritants, (i.e., increased pO_2,) to the mucous membranes, may cause tearing and minor visual impairment. The lacrimal apparatus is a gravity oriented fluid system in which the tears flow down the nasolacrimal ducts to the nose. In a weightless state it is anticipated that tears will adhere to the globe due to surface tension, with some pump action possible by the closing of the lids. Spreading of tears over the globe has been noted on zero G aircraft flights in airsick subjects. (15). However, visual impairment has not been noted and astronaut Cooper reported seeing trains, boats, trucks, and houses during the MA 9 flight. This has been disputed on the basis that it exceeded the maximum resolving power of the unaided eye which is taken to be 1-2 minutes of arc. At approximately 100 miles or 500,000 feet, this would limit resolution of objects of approximately 150 feet in diameter. However, objects can be visually detected well below this resolving power of the eye which is the limit of discerning two points or discriminating distinct shapes. With adequate contrast, a black line

seen against an illuminated background can be detected as small as 0.5 to 2 seconds if its length is over 1 minute. Theoretically, there is no size limit relative to detection of a bright star against a dark background, provided there is sufficient intensity of the object. The largest stars visible to the unaided eye are 0.05 second in visual angle (equal to 1-1/2 inches at 100 miles). Factors such as contrast and time, as well as experience and intelligence, vary greatly the ability of an observer to make critical visual observations. In Titov's flight, following launch during transfer to weightlessness, an illusion of "head down position" appeared. It seemed to Titov that the instrument panel shifted upward and he himself performed flight in a "head down" position. The sensation lasted about one minute, after which spatial orientation was restored. Sensations of nausea were aggravated by sharp head movements and when observing swiftly moving objects (16). Labyrinthine disturbances are presumed to be the cause of Titov's motion sickness. Whether this effect is related to Graybiel's observations in the slow rotating room (17) or other findings (18, 19, 20, 21) is unknown. United States (14, 22, 23), as well as later Russian flights (24, 36), indicate that this motion sickness may be prevented by advance training and is a function of individual susceptibility. Although unlikely, Titov's nausea may have been related to contaminants in the life support system.

(3) Metabolism

A decrease of metabolism in bed rest has been well established (26, 27, 28). As this change occurs over a period of weeks, no confirmation from water immersion experiments or from in-flight observations have been reported.

(4) Cardiovascular Function

Generally, the heart rate increased in water immersion experiments (29, 30, 7, 31, 17). This may have been due to increased tissue pressure and to increased urinary water loss which resulted in a reduced blood volume. Beckman (29) attributes the cardiovascular changes to negative pressure breathing. In the bed rest experiments, there was great variability and a trend towards

increased heart rate (32, 26, 33). On the basis of decreased metabolism, a slight decrease of heart rate would be expected under space cabin conditions. In actual space flight, the heart rate of Schirra, Cooper and Gagarin returned to normal or near normal after an initial increase. Carpenter's was 70 compared with his normal of 56, and Titov's was 76 with a control value of 70.

There appears to be an increased instability of the systolic pressure which may reflect psychological stress. Orthostatic hypotension after exposure to weightlessness appears to be a common phenomenon (Immersion: 30, 7, 8, Bed Rest: 30, 28, Space Flight: Schirra, Copper). Systolic blood pressure tends to increase in the water immersion experiments (29, 30, 5, 31, 17). This may be due to the increased tissue pressure increasing the peripheral resistance. In their cosmonauts the Russians (34) found a change in the nervous control of the heart and an asychronism between the right and the left heart. In animals exposed to space flight conditions, Gazenko (16) found a change of the intensity of the heart tone and longer systole. After 8-10 hours there was a decrease of the systolic index and a change of the T wave.

The difference in the duration of the cardiac cycle shows greater variation in space in both men and animals. For example, the difference in the A-V conduction time was longer in space than on earth for the cosmonauts (e.g. 0.5 to 0.7 seconds in space compared to 0.20 to 0.25 seconds on earth) and the lapse of time ("electromechanical delay") from Q wave to the onset of mechanical systole extended sharply after 5-8 hours under weightless conditions.

(5) Respiration

Changes of respiration in the water immersion experiments cannot be considered relevant due to the negative pressure in the lungs. Otherwise, no significant changes have been reported. With decreased metabolism and, perhaps, increased oxygen concentration, a slight decrease of minute volume may occur.

(6) Water and Electrolyte Balance

In water immersion there is an increased urinary excretion due to the increased tissue pressure (30, 8, 33) and possibly also due to negative pressure breathing (29). This causes a decrease of specific gravity (31) and of

Na and K concentration of urine (30) with an increase of the total Na and K excretion (30). It accounts also for increased hematocrit (31, 22) and possibly an increased white count (31).

(7) Musculo-Skeletal System

Decrease of muscular mass and muscular strength in water immersion is well established (7, 9, 17). Similar findings have been made in bed rest (32, 28). The corresponding chemical changes in urine are also fairly well established; i.e., increased creatine excretion (31, 9, 17). Increase of urinary nitrogen (29, 31) and of urea (31) have been reported. According to Yuganov (35) there is a decreased amplitude of the action current of the anti-gravity muscles, sometimes to the point of isoelectric silence. Other skeletal muscles showed an increased action potential.

Rotation of a vehicle or container providing 0.2-0.3 g is sufficient to permit the animals to fix the position of the body and move without noticable disturbance of coordination. Exercise repeated several hundred times in weightless animals utilizes minimal energy relative to earth. In one guinea pig returned to earth, increased spontaneous activity of the muscles of the rear extremities was detected by electromyography (16).

As far as skeletal effects are concerned, an increase of urinary calcium has been observed in water immersion (29, 30), in bed rest (32, 26, 31), and in the Russian reports on Popovich and Nikolayev (36). An increased phosphate excretion has also been observed for immersion (29) and for bed rest studies.

b. The following discussion is an attempt to evaluate systematically the anticipated effects of weightlessness:

(1) Absence of Weight Bearing

The elimination of gravity effects on postural tonus will decrease the energy required to move the body or parts thereof. A sleeping subject produces about 65 calories per hour. As tonus of anti-gravity muscles accounts for about 10 calories, basal heat production may decrease under weightless conditions to 55 calories per hour (220 BTU). Under sitting-resting conditions, the heat productions is about 100

calories per hour. As mental activity consumes relatively little energy, heat production may be reduced under weightless conditions to nearly the same as the basal, i.e., 60 calories per hour (240 BTU). If the astronaut performs some type of work where gravity effects are minimal, the energy expenditure should be the same as on earth. The corresponding total effect of weightlessness is given in Table 6. This would indicate a decrease of 18% under weightless conditions. Corresponding to the decreased metabolism, there should be a decrease in total heat production, in oxygen consumption, carbon dioxide production, respiratory minute volume, cardiac output, and blood volume. Mellebrowicz and Galle (37) also showed that efficiency is decreased when exercising in the lying down position.

TABLE 6. EFFECT OF WEIGHTLESSNESS OF HEAT PRODUCTION (CALORIES)

Condition	Hours Maintained	Heat Production on Earth		Heat Production in Space	
		Per Hour	Total	Per Hour	Total
Sleeping	8	65	520	55	440
Resting-sitting	8	100	800	60	480
Light work	7.5	200	1,500	180	1,350
Heavy work	0.5	400	200	400	200
Total:	24		3,020		2,470

Muscular atrophy results from disuse. Therefore, there may be a gradual regression of muscular tonus, muscular strength, and muscular mass, and a decrease of neuro-muscular reflex responsiveness.

The loss of muscular mass will further decrease total metabolism probably by a small amount of about five calories per hour for 24 hours. This will bring the total metabolism down to 2,350 calories, a total decrease of 22%. This calculation is based on the effect of absence of weight bearing. If there is inadequate exercise this could be a superimposed effect. Adequate exercice may not necessarily prevent deterioration due to weightlessness. If it is not possible to prevent deterioration of antigravity muscles by means of exercise, it may be possible to prevent it by electrical stimulation. However, even if all remedial procedures are fully effective, there could be a decrease in metabolism by approximately 18%.

Most disorders which result in a decrease in muscle mass, but do not interfere with the synthesis of creatine by the liver, may cause an increase in the plasma concentration and urinary excretion of creatine. These changes are not necessarily proportional to the loss of muscle mass.

The composition and strength of bone is determined by muscular activity and gravitational stress. In a weightless state change in the bony trabecular pattern with mobilization of calcium and phosphorus will occur. The degree of change and its significance in relationship to pathological bone fractures and renal calculi must be established. No experimental evidence to date suggests that calcium mobilization can be prevented in a weightless state. Hence, the critical question is whether the body can re-establish a calcium balance at a lower calcium body storage level and maintain a normal serum calcium ion level before renal calculi occur. Bladder distension and retention in the lower urinary tract would increase the incidence of infection which predisposes the kidney to stone formation.

During prolonged bedrest there is a rise in urinary excretion of calcium which increases to a plateau in a few weeks. Maximum daily calcium excretion averaged 17 meq/24 hr in normal immobilized subjects (38) and 26 meq/24 hr in fracture patients compared to a normal urinary calcium excretion of 10 meq/24 hr. Hypercalcuria 1-1/2 to 2-1/2 times normal is associated with renal calculi. The serum calcium level increased 0.4 meq/1. Hypercalcemia per se has a marked effect on renal function, producing polyuria with inability to concentrate the urine. If the polyurea evident in Glenn's flight and Carpenter's dilute urine in spite of hemocentration was related to hypercalcemia, then the hypercalcuria must have been much greater than reported. Based on clinical experience, R. Levine believes that this problem, if real, will manifest itself during the first two to three months of exposure to weightlessness. Tremendous amounts of calcium must be lost before pathological fractures represent a significant problem. However, resistance to impact loads on re-entry may be reduced.

(2) Loss of the Hydrostatic Component of the Circulation

Normally in the supra-cardiac region the arterial flow is against gravity. Therefore, the absence of gravity will transiently increase arterial pressure and arterial flow rate. On the venous side, blood flow is with the

gravitational force. Therefore, in absence of gravity, venous pressure could be increased with a corresponding increase of tissue pressure. A Russian report (16) on Titov's flight is of interest: "Starting from the fourth turn, a feeling of heaviness appeared in the head and pressure in the region of the superciliary arcs, and also unpleasant sensations in the eyeballs when moving them (especially at extreme abductions)." This response was attributed to motion sickness.

In the infra-cardiac region on the arterial side, gravity will be in the direction of blood flow and absence of gravity may decrease arterial pressure. On the venous side gravity will be against venous flow and accordingly absence of gravity may increase venous flow. Correspondingly, there could be a low capillary pressure. Pollack (39) found that the blood pressure in the toe increases by 100 mm Hg when changing from the lying to the standing position. In the lungs, weightlessness may equalize the ventilation: perfusion ratio; i.e., decrease it in the upper lobes and increase this ratio in the lower lobes. However, clinically the magnitude of these changes appears insignificant.

The lack of hydrostatic pressure in weightlessness may also affect various fluid containing organs. In the stomach, mixture of its liquid contents with gas may interfere with normal secretion, motility, and evacuation. There may be a lack of pressure response with difficulty in emptying the gall bladder and urinary bladder. There may be difficulty in drainage of paranasal sinuses and the Eustachian tubes. However, no difficulties were experienced by the cosmonauts in taking food or water, nor in urination and defecation (16).

(3) Change the Position of Internal Body Organs

A change of the position of the heart will affect the electrical axis, but probably it will have little effect on the mechanical activity. In the lungs, the chest movement of inspiration is against gravity, and expiration under resting conditions is assisted by gravity. In weightlessness the inspiratory effect should be facilitated and the expired effort should be greater. Under weightless conditions the diaphragm will have a higher resting position, which may facilitate inspiration and inhibit expiration.

On earth the intestinal organs press on the urinary bladder. Absence of this pressure may contribute to absence of filling pressure as reported by

astronaut Glenn. It is possible that the sensation of fullness of the colon is similarly inhibited.

(4) Absence of Gravitational Convection in Gases and Liquids

Absence of convection will effect heat loss from the skin. On earth, air in contact with the skin absorbs heat and becomes more saturated with water vapor. Due to gravitation, the heated air rises and is replaced by cooler air. Convection accounts usually for 30% of the total heat loss (900 calories) and evaporation from the skin for 14.5% (440 calories). The inhibition of heat loss will increase skin blood flow, skin temperature, and sweating. The overall effect on the "shirt sleeved" astronaut may be a modification of his thermal comfort zone. A similar problem is the possible accumulation of expiratory carbon dioxide and water vapor in the area around the face. Under earthly conditions warm expired air rises and is replaced by cooler uncontaminated air. Under weightless conditions it would tend to accumulate around the mouth and be rebreathed. Adequate ventilation to the helmet while wearing a space suit must be supplied to prevent a build up of carbon dioxide. Similarly cabin ventilation must be adequate for proper circulation of the atmosphere under weightless conditions. The importance of these effects is probably limited to design considerations for life support systems. Verification must await future spacecraft suitable for "shirt sleeve" operations.

(5) Orientation and Balance

Vision and the labyrinth functions provide orientation and balance. In space the usual visual reference clues are modified. In the labyrinth the otolith organ will have an altered input and the signals from the semicircular canals will be different.

(6) Kinesthetic Sensation

The input from kinesthetic receptors is decreased in space. This will cause a lack of awareness of the position of the body or parts thereof and a lack of awareness of movement. An example is the upward drift of the arms when sleeping as observed under weightlessness and in the water immersion experiments. The most important effect may be lack of muscular coordination, which may affect precision and energetic economy of movement although no such difficulty has been reported.

Smith et al (40) determined that bladder distention in normal adult males can significantly increase iliac vein pressure. If the urge to urinate is diminished in the weightless state, bladder distension could occur with an increased incidence of leg edema and/or venous thrombosis as possible consequences. Conversely, absence of dependent hydrostatic pressures in weightlessness, and the possibility that the increased pressure caused by a distended bladder is gravity dependent (i.e., weight rather than volume) would reduce the probability of such venous distension in a weightless state.

(7) Aspiration and Ingestion

Particles drifting in space may easily be aspirated causing obstruction, inflammation, and infection of air passages and lungs. The incidence of "silent regurgitation" with subsequent aspiration of stomach contents may be greater in a weightless state.

While gravity contributes to swallowing, theory as well as practical experience does not indicate any serious difficulties in swallowing of liquids or solids under weightless conditions. The relief of gaseous distention of the stomach may be more difficult in the weightless state because of the absence of a gas bubble. Stomach distension may apply pressure on the heart and interfere with venous return leading to cardiac embarrassment.

(8) Stress

The non-specific stress syndrome of the hypothalamic-pituitary-adrenal axis may be altered under weightlessness. Alteration in the normal cyclic level of ACTH could result in adrenal hypertrophy and hypercortisonism.

Re-entry is a stress of short duration which can be predicted as to time and intensity. Post-landing efficiency is a problem of survival. It may take several days or even a week until the astronaut is located and reached by the rescue team. Meantime, he must be able to get out of the capsule, to discard the space suit, and to take care of his needs. Two potentially serious difficulties can be anticipated:

1) Orthostatic hypotension may occur due to decreased vascular tonus and/or decreased venous return due to lack of muscular contractions or decreased effective blood volume. Schirra and Cooper (14) had orthostatic hypotension without noticeable muscular deterioration but were restricted to a confined position for relatively long periods of time. The loss of muscular tonus will mainly effect the legs and abdominal cavity. Artificial gravity full time should prevent this deterioration, and intermittent exposure to artificial gravity may prevent it. However, diuresis may re-occur within a few hours after exposure to artificial gravity. If no reconditioning should be possible before re-entry, it may be advisable to increase tissue pressure passively by means of elastic bandages or some other device. Drugs are not suitable for prolonged use but may be of value for re-entry and post landing stresses. N.C. Birkhead in his report (41) on the effects of six weeks bed rest stated that: "One hour of daily supine or sitting exercise was sufficient to maintain physical work capacity, but did not prevent orthostatic intolerance or increased urinary calcium loss (67) resulting from bed rest."

2) Muscular deterioration and bone demineralization may occur due to the lack of physical activity. Bed rest experiments and observations indicate that after muscular wasting it takes several weeks to regain full efficiency. Disuse decalification of bone is a well-known and reversible phenomenon. However, it is not known whether the demineralization expected to occur under weightless conditions can be fully explained by the lack of muscular stimulation, and whether it can be reversed with the resumption of exercise. The decalcified bones will be more susceptible to fracture with the impact stresses of landing.

Evaluation of the human response to weightlessness requires a carefully designed and well-controlled experimental program. Mission safety is a basic requirement and includes the ability to withstand re-entry stresses. Space flight experience to date is inadequate to establish the minimum standards of physical fitness required for a safe re-entry. Therefore, the experimental measurement program must provide information from which predictive indices of future performance can be reasonably obtained. Although the trend of human responses on continuous exposure to weightlessness is helpful, earlier and more accurate information may be obtained by observing the response when the system is put under stress.

The Flack test, exercise, and centrifugation appear to be the most suitable means of applying stress. Their use in conjunction with appropriate time based measurements collected before, during, and after appplication of the stress, should establish early in the experimental program the predictive values of these procedures.

Should weightlessness produce a significant or harmful deterioration in human performance, these same procedures may be applied for longer time periods as corrective measures. In addition, the tourniquet technique may be of value in preventing deterioration of cardiovascular tone. Exercise in some form appears to be desirable to prevent general deterioration of the neuro-muscular apparatus. It may not prevent deterioration of all anti-gravity musculature or inhibit calcium mobilization. If exercise is ineffective, addition of electrical stimulation may prevent generalized muscular deterioration.

Artificial gravity full-time would appear to be the ideal solution on physiological grounds. However, with increasing g simulation, coriolis forces on muscular coordination and coriolis effects on equilibrium become more prominent. In addition, space station design requirements are greatly increased in providing artificial gravity full-time.

Intermittent artificial gravity may accomplish the same thing as full time artificial gravity. Although it may not be as efficient in counteracting effects of weightlessness, it has the advantage of experimental flexibility. The level of intensity and duration of exposure to artificial gravity should be adjusted according to experimental results.

2. Psychological Aspects

Various psychological performances may change with exposure to weightlessness, and this may be particularly true with respect to altered sensory-motor loops due to changed patterns of sensory input information. Such information is necessary for adequate performance of many tasks. Alterations in input will affect psychomotor, and perceptual bases of behavior. Analysis of the psychological functions with respect to weightlessness is as follows:

a. Sensory Systems

(1) Visual Acuity

During brief periods of weightlessness provided by Keplerian trajectories of aircraft, it was observed that visual acuity was degraded in some degree, but this fact was considered to have no practical significance. A possible but not likely mechanism for this decrement was thought to be displacement of the crystalline lens of the eye.

In contrast to the foregoing evidence, Cooper's reports on what he observed during his orbital flights represents excellent visual acuity. It is assumed that Cooper's judgment was not impaired and that he was not hallucinating. Therefore weightlessness may be irrelevant to the excellent visual performance reported.

(2) Heterophorias

According to evidence presented by Gerathewohl (11), experienced aircraft pilots in Keplerian trajectories were observed to show vertical phoria (elevated pupils). If this effect were to be noted in orbital flight over significant time intervals, ability to make distance or dimensional judgments between objects may be impaired. Operations such as docking would be more difficult and/or would take more power; inherently, there would be more errors in visual space perception.

(3) Vestibular Function

In the weightless state sensation of linear accelerations will be limited to transient accelerations induced by ambulation or correction of orbital decay. Sensation of angular accelerations will be produced as usual by rotations of the head during normal movements, as well as by rotations during desired or inadvertant tumbling. Suggested hypotheses are: (a) the threshold for linear acceleration may be reduced and the subject may become more sensitive to small difference among small linear accelerations, and (b) absolute and difference thresholds to angular accelerations will be less affected under conditions of weightlessness and nystagmus and vestibular "distress" will be reduced as the subject's adapt to the weightless environment. Titov's experience is described previously.

(4) Kinesthetic Sensation

Kinesthetic and postural sensation patterns to the kinesthetic and postural receptors, located in the joints, tendons, and muscles will be altered in the weightless state since force will be required only to accelerate or decelerate objects, not to resist gravity or move against gravity, and the amount of force and muscle stretch required will be less and thus altered. As with most receptors, it is hypothesized that less than the usual frequency of stimulation, or less than the usual intensity of stimulation to the senses will lower threshold and increase sensitivity.

b. Perception

(1) Illusions

A visual illusion which occurs with change from the normal gravity condition to weightlessness is the oculo-agravic illusion. This illusion involves displacement of afterimages and images of luminous targets seen in the dark, in the direction of the change in acceleration, and seems to be due to otolith stimulation (43, 44). It would be useful to determine the characteristics of this response over the duration of the missions, as contemplated. The information would be applicable against planned work performance.

(2) Motion Discrimination

Hypothetically, weightlessness may affect the visual ability to discriminate rates of change in motion, or the ability to detect motion at accepted threshold levels, as on earth.

If discrimination of motion were altered, tasks which require such an ability might need to be reassessed against the actual visual capability. The ability to perform tasks requiring motion discrimination would not be known until it were known whether or not motion discrimination ability remained the same or was altered with respect to usual earthly performance.

(3) Orientation

Indications are that when gravitational stimulation of the otoliths is removed, the human subject quickly adopts a subjective "foot down" orientation

especially with eyes open (46). In terms of orientation to the immediate surround, either visual cues or tactual cues as from tether devices are required (43, 48).

Another concept of orientation involves orientation with respect to some coordinate system of the universe or the solar system. This type of orientation will be simpler than orientation by celestial navigation on earth, since the earth's rotation will not have as much of an influence on the observations. But it will be less familiar a system of orientation than the conceptions of earth orientation and navigation. Increasing familiarity with the appearance of the earth from orbit and continuing practice of space navigation should gradually improve this type of orientation.

(4) Mass Discrimination

Experiments in mass discrimination on an air bearing table indicate that mass increments must be at least twice as large as weight increments to be discriminated (13). Under weightlessness, mass discrimination actually becomes the kinesthetic measure of muscular force to overcome inertial gradient. Thus, it may be important for future design to study mass displacement in various dimensions. A suggested hypothesis, in addition, is that gradually with experience smaller mass differences will be discriminated.

c. Psychomotor Performance

(1) Tracking

Experience with orbital flight and with aircraft flying Keplerian trajectories indicates that subjects with a firm restraint support system are able to perform tracking tasks with proficiency within a few seconds (43). This type of performance is complex and, therefore, degradation in sensory, perceptual-conceptual or motor performance will show up in performance. Tracking performance would provide, therefore, a good monitoring index for safety purposes.

(2) Reaction Time

Reaction time is the end product of a sensory, neural, motor chain. If weightlessness has an effect on either sensory thresholds, neural function or motor performance it would be expected that such effects would be

reflected in measured reaction time. It is probable that reaction times may be increased due to a reduction of antagonism among opposed muscle groups.

d. Gross Motor Coordination

(1) Locomotion

Normally, the sensory-motor loop, best described as a servo loop, is part of the locomotion process. Sensory inputs come from the vestibular, kinesthetic, pressure and stretch receptors, all under major influence of gravity. In the weightless state, vestibular and kinesthetic sensations will be altered as noted under kinesthesis. Pressure sensations will be generated during activities like "pushing off" to propel oneself in "ballistic trajectories" and "landing" from such trajectories, grasping hand holds for locomotion and, perhaps, "walking" using aids such as velcro, magnets or suction. Some pretraining in methods of locomotion can be provided before orbital flight in a space station and it might be hypothesized that a continuing improvement in ambulation would take place to some maximum which should be carefully evaluated. However, this hypothesis must be evaluated for limited periods of weightlessness and especially after prolonged time periods of weightlessness. These data are required in order to assess performance capability in space and provide a basis for planning of work schedules with respect to type and extent of activity.

(2) Ballistic Aiming

Experience in aircraft and spacecraft under weightless conditions appears to indicate that a slight temporary overshoot in the "vertical" axis occurs in ballistic aiming tasks, but this performance rapidly improves with knowledge of results (43, 23).

(3) Large Item Manipulation and Force Application

In the weightless state, new methods must be developed for application of force, and manipulation of large items and tools. Many of these new methods will emerge after trial and error in time. It will be desirable to have these working methods described for future space missions. The data should include estimates of efficiency and the scope of action by a subject to permit accomplishment of tasks in a given time.

(4) Limb Steadiness

Changes in limb steadiness during weightlessness should not be of sufficient magnitude to be critical. Steadiness should improve over time: however, at least for brief exposure, that is, during early phases of weightlessness, tremor is likely to be inversely related to g force.

(5) Fine Motor Coordination

Changes in fine motor coordination should not be as great as changes in gross motor coordination. Soviet cosmonaut Gagarin reported that he observed no change in his handwriting (43), a complex fine motor performance.

(6) Higher Mental Process

To the extent that "sensory deprivation" experiments are relevant to weightlessness, bizarre mental processes may occur that would degrade memory, monitoring performance, learning ability and attention, but are unlikely.

(7) Personality Factors

Although there is some variation in descriptions of the experience of weightlessness, it is probably safe to say that in general it is experienced as being very pleasant (23).

Again to the extent that sensory deprivation experiments are relevant to weightlessness, it may produce irritability, hostility, boredom, anxiety, and hallucinations.

B. DYNAMIC FACTORS (TABLE 7)

1. Acceleration

Man's response to an acceleration is the sum of his responses to the variables that comprise a specific exposure, i.e., magnitude, direction, duration, rate of onset, body position, and restraint system.

The physiologic responses to a specific acceleration is also influenced by the preceeding acceleration pattern to which the man was exposed. The significance of the previous acceleration patterns becomes apparent when the rapidly changing acceleration patterns of the launch-orbit and orbit-reentry-recovery mission phases are examined. Another factor is physical fitness. The hypodynamic state of weightlessness and a lack of exercise may be deleterious factors, unless means of adequate control or correction are found.

Escape will present the most difficult acceleration environment, particularly if it occurs during launch while the booster is still within the earth's atmosphere and after a high velocity has been attained. Anticipated accelerations are in the range of 22 to 26 G at an onset of 2,000 to 4,000 G/sec^2 for 8 to 12 seconds (49).

The nervous system is of importance in performance monitoring, particularly in $\pm G_z$ accelerations. The relatively limited response of the cardiovascular system during $\pm G_y$ (sideward) acceleration may warrant additional investigation particularly when the effects of acceleration on the respiratory system are not any greater than in $+G_x$ (front-to-back) acceleration.

The exposure to $+G_x$ acceleration will result in altered ventilation mechanics. Increased effort will be required to move the chest wall and diaphragm which will result in reducing tidal volume and increasing the respiratory rate in order to maintain minute volume. The oxygen consumption will thus be increased due to the increased work of respiration and possible increased metabolic demands induced by muscle tension, cardiovascular work, and anxiety.

TABLE 7. ENVIRONMENTAL FACTOR: DYNAMIC FACTORS

Function		Medical Significance	Anticipated Response 1°	Anticipated Response 2°
Psychological performance	Sensation	1	+++	+++
	Psychomotor Processes	1	+++	++
	Perception	1	0	++
	Higher mental processes	2	+	++
	Personality	2	0	+++
Circulation	Pump	1	+++	0
	Peripheral circulation	1	+++	0
	Vasomotor control	1	++	+++
Respiration	Pulmonary	1	+++	0
	Blood	3	0	++
	Tissue	3	0	++
Thermo-Regulation	Production	3	+	0
	Storage	3	0	+
	Dissipation	3	0	++
Neuromuscular activity	Motor coordination	1	+++	+++
	Work metabolism ratio	3	0	0
Skeletal support	Integrity	3	++	0
	Movement	2	++	0
Digestion	Ingestion	2	0	+
	Digestion	3	0	+
	Absorption	3	0	+
	Excretion	3	0	0
Metabolism	Carbohydrate	3	0	0
	Fat	3	0	0
	Protein	3	0	0
Endocrine balance	Stress	2	+++	0
	Reproduction	3	0	0
Fl id electrolyte balance	Ingestion	3	0	0
	Regulation	3	0	+
	Excretion	3	0	++
Hematological response	Formation	3	0	0
	Activity	3	0	0
	Destruction	3	0	0
Immunological response	Tissue antibodies	3	0	0
	Circulating antibodies	3	0	0

Medical Significance:

1 Required data
2 Desirable data
3 Non-essential data

Anticipated Primary (1°) or Secondary (2°) Response

0 Unlikely
+ Possible or unknown
++ Probable
+++ Definite

Roentgenographic analysis suggests that there are disturbances in pulmonary blood flow distribution, with an increased portion of the total flow being directed to those portions of the lung that are dependent in the inertial force field. Vascular disturbances including pulmonary edema and rales have been detected in the posterior basilar regions of the thoraces of subjects who were subjected to continued forward accelerations. There is some indication, from increased radiolucency of the anterior portions of the lungs, that a major portion of alveolar ventilation is taking place in the least perfused portion of the lung tissue. Thus, the shift of major aeration to the anterior lung and major blood flow to the posterior portion could cause changes in the arterial hemoglobin saturation and carbon dioxide concentrations interfering with normal cerebral and cardiac function.

The cardiovascular system responses with a marked tachycardia (180 - 190 at 10 and 12 g) and occasionally mild variations in cardiac rhythm occur. Petechiae may occur in skin folds of the neck and shoulder girdle where counter pressure is lacking. There is some indication of cyanosis when subjects have been exposed for several minutes to plateaus of 6-g. EKG readings reveal rare extrasystoles. Vectorcardiographic analysis shows inconsistent and minor (less than 20°) shifts in the QRS and T loops at 4-g. One might expect greater shifts at greater g's. There is indication that the subjective substernal pain experienced at high levels of acceleration may be due to myocardial ischemia since blood oxygen desaturation has been shown to occur.

Cardiac output showed an increase proportional to the g-level up to about 8 g. Stroke volume shows an initial decrease at 2-g with no further changes at higher levels up to 8-g. Mean aortic pressure increases with increasing acceleration. However, most of the observed changes are within the physiological response limits of exercise.

No significant correlation exists between g-tolerance and resting blood pressure among individuals and also on an intra-individual basis. Also, no significant correlation exists between g-tolerance and either plasma volume or whole blood volume per kilogram of body weight, or per square meter of body surface area. There is no correlation between cardiovascular responses to a standardized exercise

stress such as the Harvard Step Test and g-tolerance [50]. Thus, the development of fitness criteria for acceleration tolerance still remains to be developed. The prediction of man's ability to withstand re-entry accelerations after prolonged exposure to a weightless state will be even more difficult due to this lack of adequate criteria for predicting tolerance when exposed to a constant 1g environment.

2. Vibration

During the various mission phases man will be subjected to both free damped vibrations and forced vibrations. The free vibrations will eventually be damped out causing little alteration in physiological function. The forced vibrations, however, are of practical importance in altering physiological and physical responses of man due to the deflection and resonance produced in the body organs. The extreme in disturbance is produced when the disturbing force has a frequency approximately equal to the natural frequency of the body organ thereby producing resonance. If the vibration is nonlinear, the unfavorable effects of resonance are diminished due to the changing amplitude of the vibration causing a change in the frequency resulting in the eventual disappearance of the resonance condition.

There is a definite frequency dependence of accelerations which coincides with the resonant displacement of the visceral organs (Table 8). An increase in body temperature is found on exposure to vibration which also has been found to occur in dead animals indicating that it is of mechanical origin.

Chronic injuries may be produced by exposure of long duration at levels which produce no acute effects and by localized vibration. They are usually associated with random blows or jolts rather than to sinusoidal motion. Relation of time interval between exposures is of significant importance as is the duration of the exposure and the method of body restraint.

Physiological responses to vibration have received little study. The major effort of what has been done is devoted to the study of the effects of vibrations on animals. Because of the inherent differences between man and the experimental animals the frequency ranges at which specific damage occurs will have very limited

TABLE 8. EFFECT OF FREQUENCY OF VIBRATION ON SPECIFIC PHYSIOLOGICAL FUNCTIONS

Frequency CPS	Intensity	Physiological Effect
0.1 - 1.0	0.3 in.	Orientation (semicircular canals) muscular coordination
1 - 10	0.3 in.	Blood vessel response: hemorrhage, atelectasis, edema
10 - 25	0.3 in.	Resonance of internal organs: discomfort, nausea, prostration
25 - 100	0.3 in.	Brain response, vibration of eyeball: difficulty of orientation, interference with instrument reading, headaches

value; however, the nature of the response will be of value in anticipating human response. Damage to human body organs and tissues can be expected to occur at lower frequency ranges than those that produce damage in the animals. This change in critical frequency is due to the differences in mass of the organs.

Anticipated physiological responses based upon studies done on rats may be briefly summarized as follows. Minor behavioral abnormalities occur after exposure of several months to 15-g at 12.5 cps[51]. The adrenal glands show a rapid fall in ascorbic acid content on exposure to accelerative levels of a few tenths of a g at 5 to 10 cps [52]. Changes in respiration, heart activity, and peripheral circulation have been observed in both men and animals as immediate and possibly transient responses to moderate vibration. Postural reflexes also appear to be inhibited by vibratory motion [53].

Mice exposed to both transverse and vertical vibration at all frequencies[54] revealed on gross examination hemorrhages into alveoli clusters in one-half the cases. The gastrointestinal tract showed a uniformly injected mesentery and gut with intraluminal blood varying in amount from slight to complete filling with frothy bloody material, especially in the upper half of the intestines. There was gross bleeding into the urinary bladder due to internal injury. No lesions were found in the central nervous system. It is of interest to note that all the animals that died showed gross changes in the lung whereas surviving animals showed little lung damage.

3. Impact

Impact is considered to be whole body acceleration for less than two seconds. Experimentation has traditionally been concerned with structural damage sustained after impact with emphasis on tolerance. More recently there has been an increased emphasis on the physiological responses following impact. These responses will be of more significance during landing than as an integral part of the on-board experimental and monitoring system particularly when recovery or rescue may take place days after impact.

Clinical shock following impact is the best known physiological response, and has been a primary limitation to the rate of onset in classical studies. The shock occurs without structural failure accompanied by bradycardia. Borderline shock (operationally defined as 90/60 mm Hg) has been observed 15 to 30 seconds after impacts of 15 to 20 $\pm$ G_x backward- and forward-facing impacts (respectively) at onset rates of 500 g/sec where the velocity change was 9 meters/sec [55]. The mechanism of this shock is difficult to determine because of its early stages it appears to be vagotonic; however, low pressure readings persist after the pulse rate returns to pre-impact levels. Medical vagotomy with atropine [56] completely abolishes the post-impact bradycardia and may be an important contributing factor to voluntary tolerance.

Impact has an effect upon neuromuscular coordination [57]. Impact levels of 20 g at 400 g/sec (forward-facing; velocity 9 meters/sec) stunned subjects

for 10 to 15 seconds followed by fine motor tremors for about five minutes. When the rate of onset was raised to 800 g/sec, stunning was increased and generalized muscle tonus increased, followed by euphoria, loquaciousness, fine hand tremor, decreased muscular coordination, and gross involuntary muscle movements such as head jerking, shoulder-arm movements, and gross trunk movements. It appears that these effects begin to appear after 20 g peak impacts regardless of direction of onset [55].

Effects of impact on the nervous system are indicated by abnormal slow wave patterns in the EEG of subjects experiencing peak impacts of + 25 G_x (backward-facing) at a velocity of 9 meters/sec and 1000 g/sec onset [55]. There is an indication that patellar and other deep tendon reflexes are more brisk after impact of $\pm G_x$ [58]. These reflexes are similar to those of patients exhibiting increased reflex briskness due to upper motor neuron lesions. The usual response to impact of 25 g will be areflexia lasting several seconds followed by hyperactive reflexes for 15 to 60 seconds and gradual recovery.

There is evidence of thrombocytopenia after forward-facing impact [59]. Thrombocyte count was reduced one hour after forward-facing, - 20 G_x impact. One week later, mild thrombocytosis was usually found.

4. Noise

Intensity, duration of exposure, and frequency characteristics of the noise spectrum affect the responses of the human ear. The various mission phases will present widely different combinations of these three variables. Launch and reentry will be characterized by short duration, high intensity noise whereas orbit will most likely have a low intensity, long duration noise spectrum. Vibrations with frequencies between 20 and 20,000 cps will affect the ear and, when high intensity vibrations are present, other tissues can be damaged. When the frequencies are in the ultrasonic range, cells rather than whole tissues or organs are affected.

The effects of noise on the cardiovascular and respiratory systems are to initially cause a decrease in respiratory rate followed by an increase accompanied by an increase in blood pressure [60]. Exposure to noise of 60 db or more inhibit normal gastric peristalsis and reduces the flow of saliva and gastric juice. At 80 to 90 db there is a 37 percent decrease in amplitude of gastric contractions [61].

Audible frequency noise above 140 db causes vibration of the skull, teeth, soft tissues of the nose and throat, chest, arms, and legs. Vibrations between 200 and 1000 cps produce sensations ranging from a feeling of vibration at about 115 db up to marked pain at 155 db. Exposures to these sound intensities are often followed by headaches.

Labyrinthine function is affected by sound intensities above 105 db with dizziness, vertigo, nausea, vomiting, and disorientation occurring during exposures to 135 to 145 db. At 135 db the main effect is on the inner ear with the possibility of permanent hearing damage. Mild loss of hearing can occur with exposures to 90 db for six to eight hours, moderate loss with exposures to 115 db in a few hours, and marked loss with exposures to 120 db for a few minutes. The loss is greater for high frequency than for low frequency noise. Prolonged exposure or exposure to very high intensity noise may result in permanent deafness. The deterioration is usually most pronounced in the 2048 to 4096 cps range [61]. Sound intensities of 140 to 150 db produce pain in the intact tympanic membrane with rupturing occurring at about 160 db.

Tolerance to noise [62] is in the range of zero to ten seconds at 135 db, two minutes at 125 db, five minutes at 120 db, and eight hours at 100 db without protection and without sustaining damage. The maximum permissible over-all sound pressure level is reduced by 3 db for each doubling of the exposure time after the ten second level. It is not desirable to expose personnel to sound levels above 150 db, regardless of ear protection, due to the extra-auditory effects encountered.

The effects of exposure to pure tones of 500, 1000, 2000, and 4000 cps and to a wide-band random noise at intensities of 110 to 130 db for periods of from one to sixty-four minutes showed that when the threshold sensitivity of the human ear to pure tones is depressed markedly (60 db), the loss is only 25 db for the level of average speech (70 db) and for loud speech (100 db) the perception of speech is almost normal. It was concluded that the temporary threshold shift is of the "nerve" type of deafness which varies with the loudness level, that is, the higher the input signal, the less the reduction in sensitivity.

5. Psychological Aspects

A major tool for conditioning to counter the effects of weightlessness and for prediction of re-entry performance and training of the subject for re-entry would be a man-carrying centrifuge. The task of prediction of re-entry performance requires identification of relevant behavioral responses to acceleration. The Mercury launch and re-entry performance appear to have correlated satisfactorily with baseline centrifuge data so that aspirations for prediction appear to be justified. However, these data do not permit extrapolation to prolonged space missions. Data in orbit will be required for evaluation of performance after exposure to systematically scheduled periods of zero g.

Vibration should be primarily a design problem since it can be studied on earth and tolerance limits set which can be met in design of the space vehicle. But it is not known whether exposure to other environmental factors will tend to lower the tolerance levels for vibration.

If a centrifuge is provided, a major problem will arise because of vibrations in the main cabin and/or the g-modules. How well the design succeeds in keeping this high amplitude low frequency vibration below the level of annoyance may need to be evaluated in orbit. Vibration levels should be kept at levels which would be acceptable for long term exposure on earth, unless increased susceptibility under weightless conditions imposes further restrictions.

At launch, and during re-entry, major noise sources will be the rocket engines and boundary layer air noise. These sources of noise will not be of particular moment so far as the present study is concerned. Noise sources that may be of interest arise from activities and machinery in the space station. The characteristics of this incidental noise have not been specified. However, proper design can minimize the disturbing aspects of such noise. Extremely high and low tones require special attention because of their annoyance value.

Except for being a masking factor in communications, the moderate levels of noise that should obtain onboard a space station may have subtle effects on cognition, emotion, and fatigue (63). The noise control design criteria should follow nearly the same principles of segregation of noise in time or location in space as on Earth. Some rational guidelines that should minimize the above responses would be: (a) "continuous" noise in sleeping areas should be held down to 35 to 40 db similar to a residence at night, (b) "continuous" noise in work areas should be held to 50 to 60 db slightly below conversation levels, (c) "continuous" noise in "lounge" areas should be held to 60 to 70 db or about normal conversation levels (64), (d) occasional higher levels of noise probably cannot be kept from obtruding into various areas; however, where possible, occasional and continuous higher level noises should be segregated away from other areas.

C. RADIATION (Table 9)

The exposure of astronauts to radiation has been less than 10 mr per day for the American astronauts. The Russian cosmonaut exposures were reported as:

7.2	mr/day	for	Vostok	I
8.4	"	"	"	II
13	"	"	"	III
13	"	"	"	IV

However, this will increase markedly with any crossing of the artificial radiation belt. A daily dose of 0.22 r/day is assumed for a typical orbit (260 n. mi. at 33° inclination) with a 10 lb/ft^2 of shielding. A comparison of the anticipated cumulative dose with the recommended limits of occupational exposure to external radiation is presented in Figure 5. A daily dose of 0.11 r/day, which would probably require two to three pounds more shielding, is also plotted to indicate any benefit that might acrue due to increased shielding. The recommended limits for prolonged exposure are presented because they indicate exposures at which the probability of detectable injury is extremely low, and they indicate the factor by which the anticipated exposure is greater than the recommended occupational limits. For the occupational population the age-proration (Figure 6) permits some flexibility in special circumstances. As can be seen in the Figure 5, the crew will be exposed to critical organ doses in excess of all limits recommended for industrial workers for one-year exposures. This comparison of anticipated dose levels and the recommended limits indicates that the probability of incurring chronic effects damage during a one-year mission is greater than the probability in industrial workers because the doses received by the eyes, gonads, skin and the blood-forming organs are in excess of the recommended limits as presented in Table 10. The probability of incurring chronic effects to the critical organs and the eyes is thus increased. The significance of the excess exposure will be affected by the previous radiation exposure history of the crew member. Assuming that previous exposure has been limited to background radiation, a twenty-five year old crew member will exceed his maximum permissible dose accumulated at his age even if the lower level of 0.11 r/day is the dosage. For a dosage of 0.22 r/day a

TABLE 9. ENVIRONMENTAL FACTOR: RADIATION

Function		Medical Significance	Anticipated Response 1°	Anticipated Response 2°
Psychological performance	Sensation	3	0	0
	Psychomotor processes	3	0	0
	Perception	3	0	0
	Higher mental processes	3	0	0
	Personality	3	0	0
Circulation	Pump	3	0	0
	Peripheral circulation	3	0	0
	Vasomotor control	3	0	0
Respiration	Pulmonary	3	0	0
	Blood	3	0	0
	Tissue	3	0	0
Thermo-regulation	Production	3	0	0
	Storage	3	0	0
	Dissipation	3	0	0
Neuromuscular activity	Motor coordination	3	0	0
	Work metabolism ratio	3	0	0
Skeletal support	Integrity	3	0	0
	Movement	3	0	0
Digestion	Ingestion	3	0	0
	Digestion	3	0	0
	Absorption	3	0	0
	Excretion	3	0	0
Metabolism	Carbohydrate	3	0	0
	Fat	3	0	0
	Protein	3	0	0
Endocrine balance	Stress	3	0	0
	Reproduction	2	++	0
Fluid electrolyte balance	Ingestion	3	0	0
	Regulation	3	0	0
	Excretion	3	0	0
Hematological response	Formation	1	++	0
	Activity	2	+	+
	Destruction	3	0	0
Immunological response	Tissue antibodies	3	0	0
	Circulating antibodies	3	0	0

Medical Significance:
1 Required data
2 Desirable data
3 Non-essential data

Anticipated Primary (1°) or Secondary (2°) Response

0 Unlikely
+ Possible or unknown
++ Probable
+++ Definite

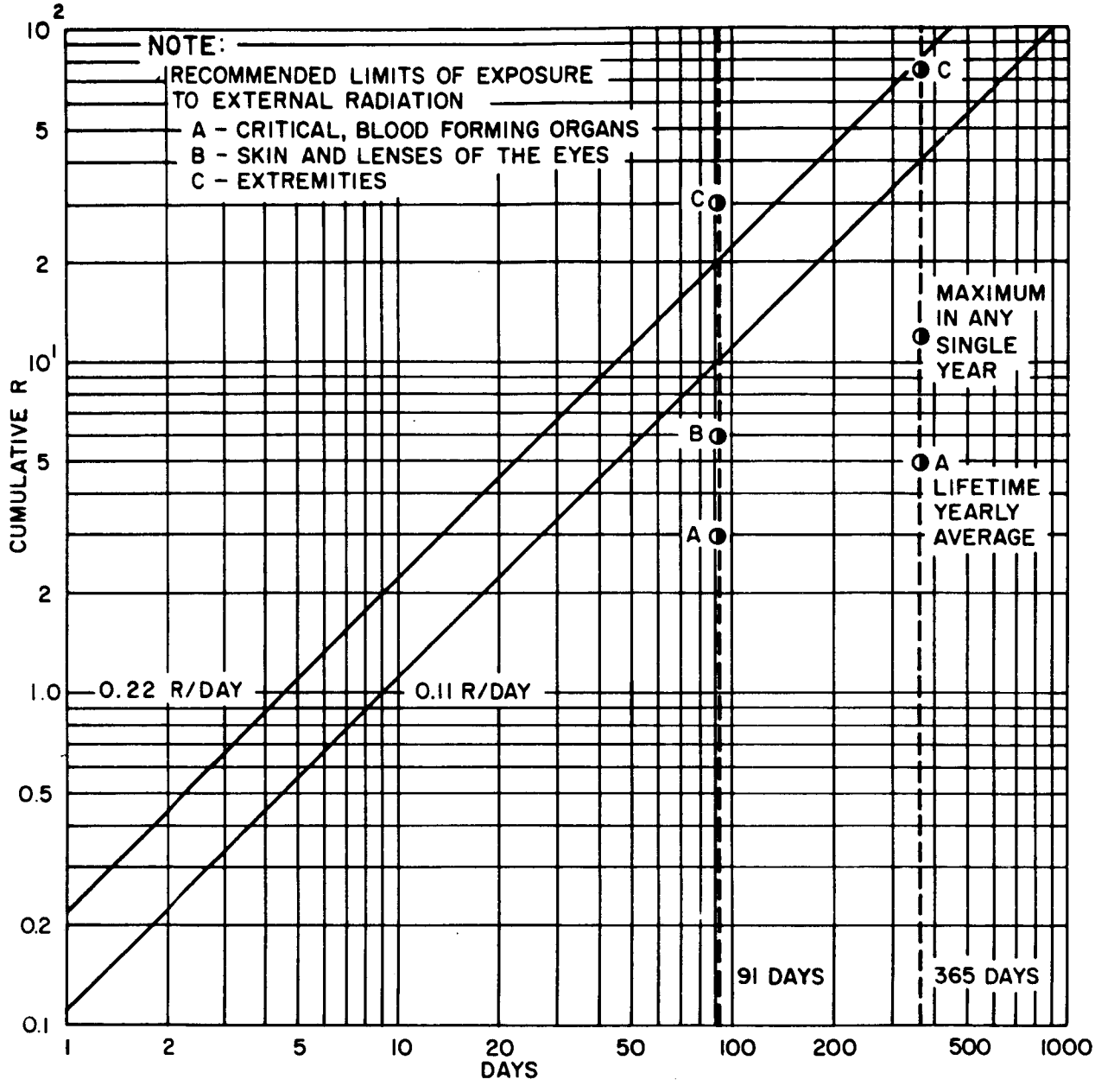

Figure 5. Comparison of Cumulative Anticipated Doses with Industrial Recommended Maximum Permissible Doses

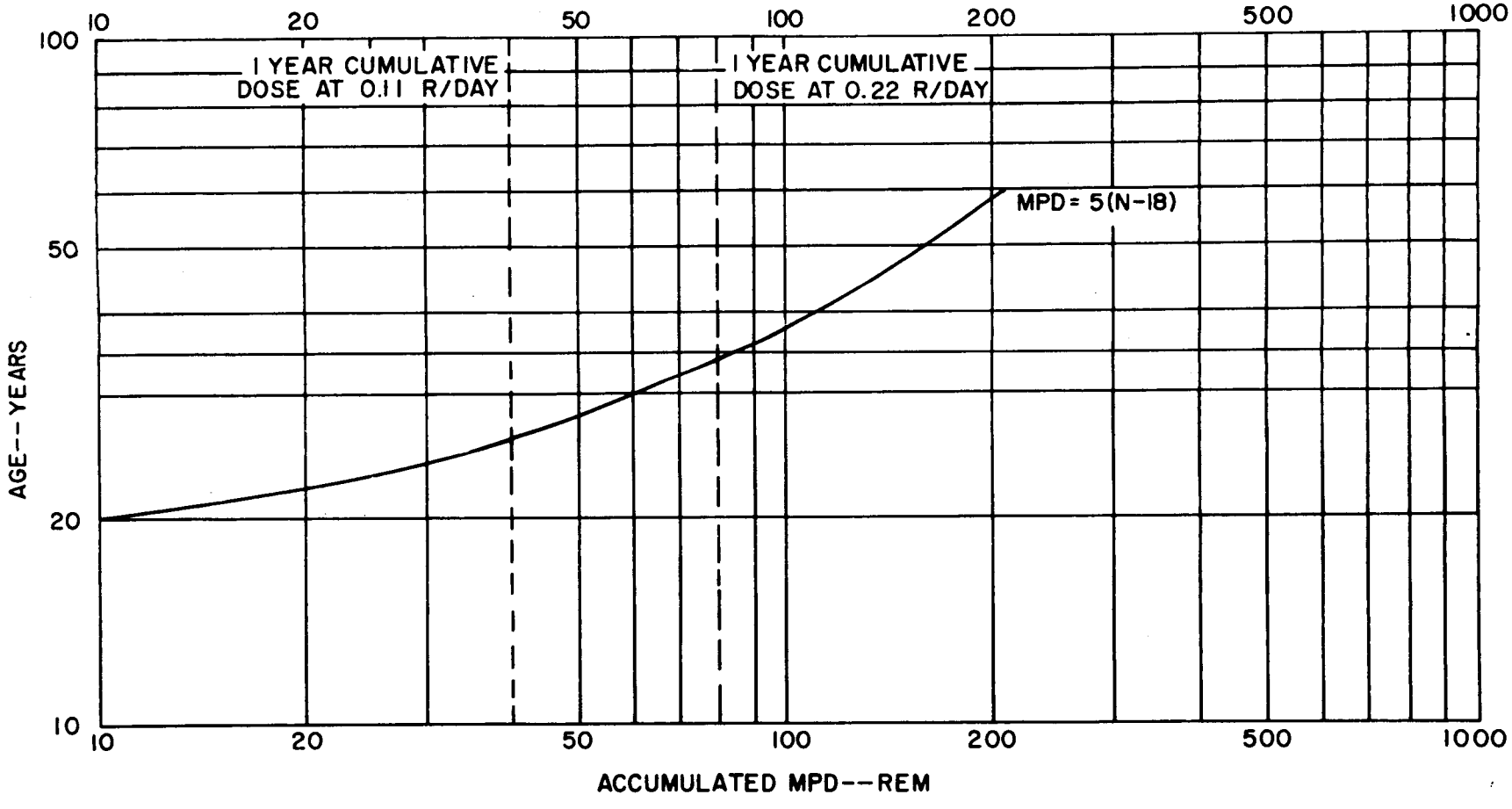

Figure 6. Relationship of Accumulated MPD and Age

TABLE 10. FACTOR BY WHICH ANTICIPATED DOSES EXCEED THE RECOMMENDED OCCUPATIONAL LIMITS

Period	Exposure	Factor (0.11 R/Day)	Factor (0.22 R/Day)
13 week	Critical organs	3.3	6.6
13 week	Whole body, eyes	1.7	3.3
1 year	Critical organs	3.3	6.6
1 year	Skin	-	0.6

thirty-five year old crew member will be exposed to slightly less than the maximum permissible accumulated dose for his age group. The restrictions imposed by requiring the accumulated dosage of the crew not to exceed the maximum permissible dose recommended for a given age group of industrial workers becomes apparent even when permitting the total thirteen week dosage to exceed the recommended limits by a factor of three and the yearly dose to exceed the recommended limit by approximately a factor of seven. The probability of incurring chronic effects is thus compounded by these simultaneous effects. The sizable factor of safety built into the NCRP recommendations offers some degree of freedom. The radiation exposure in space occurs during the passage through the anomaly, which is 4-6 times daily, about seven minutes each, seven days a week. How such a pattern compares with industrial exposure of eight hours a day, five days a week has not been determined as yet.

The anticipated radiation is not expected to produce any acute observable effects; however, if any biological effects are to appear they will most likely be detected in hematopoietic tissue, germinal epithelium, and basal layers of the skin which readily reflect change induced by radiation.

The relative radiosensitivities of various blood cells are given in Table 11. It can be seen that the radiosensitivity of the blood forming cells goes through a maximum in the course of development; of these, lymphoblasts [65] and erythroblasts [42] are extremely sensitive. Because the rate of change of blood elements in the peripheral blood is related to the normal life span, the rate of change in the number of particular types of cells following radiation injury is the result of the balance between production and destruction. The comparatively long life of the red blood cell results in slower rates of change than in lymphocytes and platelets. The relatively slow changes in the erythrocytes count will not provide an indication of radiation damage at the anticipated intravehicular intensities. Reticulocyte disappearance is a very sensitive index of a single intense exposure to radiation in the lethal range. Conversely, the return of reticulocytes is a good prognostic sign for recovery, but does not invariably indicate a favorable prognosis. Statistically, average changes are manifested early, but early changes in individuals are hard to evaluate due to the time dependent variations within the individual and the variations among individuals. A well-established base line for each individual will, therefore, be a necessity.

The rate of decrease in platelet count after irradiation is between that of the red cells and the granular leukocytes. Frequently, the platelet count increases for four or five days after irradiation following which there is a decrease until platelets become constant. The new level appears to be a function of the radiation received. The turnover rate of platelets is reported to be four to five days [66], granulocytes three to five days [68], and lymphocyte life span measurable in hours [69].

Variation of leukocyte count cannot be predicted with great accuracy because of the limited knowledge about the life span, pool size, and changes in capillary permeability with consequent relocation of cells and fluid that occur at some dose levels.

The lymphocyte count begins to decrease immediately after exposure with various morphological changes (fissured nuclei, cytoplasmic refractile granules)

TABLE 11. RELATIVE RADIOSENSITIVITY OF BLOOD CELLS AND THEIR PRECURSORS (69)

Radio-Sensitive	Relatively Radio-Sensitive	Relatively Radio-Resistant	Radio-Resistant
			Reticuloendothelial
Monoblast	Early Monocyte		Monocyte
Lymphoblast Early lymphocyte Lymphocyte			
Myeloblast	Promyelocyte	Myelocytes Neutrophilic Eosinophilic Basophilic Metamyelocytes Neutrophilic Eosinophilic Basophilic	Neutrophil Eosinophil Basophil
Erythroblast	Basophilic-Erythroblast	Polychromatophilic Erythroblast Normoblast	Erythrocyte
Megakaryoblast		Megakaryocytes	Platelets

appearing [70]. The rate of destruction of normal lymphocytes is increased after exposure to as little as 50r [71], with decreases beginning immediately after exposure with the magnitude and rate of change being closely related to the amount of radiation received. Small doses of ionizing radiation for long-term exposure manifest themselves by statistically lowered WBC counts, hypersegmentation and abnormal lymphocytes. These general findings are confirmed by a recent report of Langham [72].

The latent effects of chronic exposure to ionizing radiation are of great importance since persistent leukopenia may develop. The individual is not, however, prevented from responding to stresses and infection with a marked, transitory, leukocytosis. Following such exposures there may be a return to the previous leukopenic level. The development of leukemia, particularly lymphatic leukemia, following chronic exposure to radiation appears well established from the statistical standpoint [73]. Animal experimentation has shown that single and repeated exposures can produce leukemia with greater frequency of exposures resulting in a more rapid induction and a higher incidence.

The germinal epithelium is one of the most radio-sensitive tissues in the body. A dose of 25 rads or less will produce microscopically detectable temporary changes in the tissue. Delayed pathological effects in the gonads consist chiefly of a temporal advance in involutional changes with advancing chronological age long after recovery from the initial radiation damage. A single dose of 150 rads administered to the gonads may produce temporary subfertility or sterility while a single gonadal dose of 800 rads is likely to produce permanent sterility [74]. Animal studies reveal that the length of exposure rather than the total accumulated dose determines the radiation effect on the testes [75]. According to a recent report by Russel [76] a dose of radiation stretched out over a long period produces more mutations in mammals than the same dose concentrated in a short period. In contrast to these studies, Lorenz [77] reports that the chronic irradiation of the testes permits recovery of the radiation effect on the testes [75]. He observed recovery of the spermatogenic tissues in man within a relatively short

time after exposure. The permissible dose, as far as the testes are concerned, could be higher than 0.1 r/8-hour day. Mutations or translocations were not observed for doses accumulated over a long period of time. This is contrary to the results of Drosophila experiments in which the mutations are proportional to duration of exposure. The differences in human response are most likely due to the greater complexity of the organism.

The anticipated radiation intensities within the space station are not expected to be of sufficient magnitude to produce any detectable changes in other tissues that readily indicate exposure to ionizing radiation. Experimental data indicate that a dose of 8.8 r/8-hour day has not produced any histologically detectable injury to the skin, hair follicles, or color of hair of experimental animals even though the exposures were 5,800 r maximum accumulated dose for mice, guinea pigs to 6,000 r, and rabbits to 12,000 r (air) [77]. No significant changes are expected in the epithelium of the stomach and colon even though these tissues represent the portion of the gastro-intestinal tract which most frequently shows changes not only in the course of local irradiation but also after total body irradiation. From observations made on patients irradiated with x-rays generated at 1,000 kv it has been concluded that the small and large intestines of adults will tolerate 4,500 r/depth delivered in fifty-four days without serious reaction [42]. The ability of the intestinal epithelium to partially or completely recover even after severe damage from an amount of radiation that is near fatal is a feature of the tissue that makes noticeable alterations in its structure at the anticipated doses unlikely. Progressively reducing the dose below levels associated with substantial early functional or morphological changes seems to delay the appearance of the late effects of ionizing radiation. The effects that are evidenced, however, cannot be qualitatively distinguished from the effects of other nonspecific damaging effects or from spontaneously occurring effects. The significance of cumulative doses, age, and individual differences make it difficult to relate low-level, long-duration exposures to the somatic hazards to which individuals will be exposed.

In conclusion, it must be remembered that hematologic indicators for the detection of chronic radiation injury will aid in the detection of changes appearing

after the damage has been sustained. The primary protection against ionizing radiation injury must be an accurate control of the radiation intensities to which personnel are exposed. The blood furnishes a sensitive means of detecting exposure but presents certain technical difficulties; however, hematological studies offer a ready index to prevent overexposure and provide a basis for withdrawal from exposure to ionizing radiations those individuals with hematological abnormalities. Remembering that dosage measurements must be supplemented by measurement of the energies, wave length, penetrative effects, and time factors it may be concluded that hematological studies should supplement physical and photographic dosimetry as a part of the physiological monitoring of the crew.

The maximum permissible doses for radiation is important not in view of the acute effects discussed above, but in view of possible delayed effects, genetic changes, decreased life expectancy and increased incidence of cancer and leukemia. These disturbances cannot be monitored directly as they are delayed. They are also of a statistical nature which cannot be determined in a few subjects. Physical measurements neglect the dose distribution which is of considerable importance in evaluation of the biological effect. Physical measurements also neglect the possible change of resistance under space environmental conditions. An increased sensitivity to radiation in space, as indicated by a disturbance of mitosis of various biological specimens which could not be explained by the physically measured dose has been reported. This may be due to the sensitizing effect of other environmental factors. Saksonov [78] reported that the RBE of protons with energies of 120 and 660 Mev for LD_{50} of mice and rats was 0.7. To determine man's response to radiation under space conditions, a much greater spectrum of radiation intensities than those available on earth is required. The use of compartments with decreased shielding would reduce the magnitude of this problem. In view of the importance of the problem and the difficulty of getting adequate direct information on the effect of space radiation on chromosome numbers and chromosonic aberrations in man, the indirect evaluation is considered the best indicator of the biological effect of space radiation under space station conditions. For the monitoring of the biological effect of radiation within the space station, preparations like testes of the grasshopper, drosophila, He-La cancer cells, human amnion cells, Escheria coli, and deoxyribonucleic acid may be utilized.

The effect of harmful radiation on psychological performance in general would be relatively delayed and secondary in nature. For example, degraded visual ability and changes in color vision would be the result of damage to the eyes due to radiation exposures beyond tolerance limits. Long before such evidence, however, malaise, nausea, and infection would have affected general performance. Usually change in biomedical functions results from radiation exposure prior to changes in psychological performance. Accordingly, it is not planned to gather psychological performance data to assess the effects of radiation.

D. CABIN ATMOSPHERE (Table 12)

1. Physiological Aspects

The selection of an optimum space cabin atmosphere will remain one of the most challenging tasks to the aerospace scientists for many years to come. A near sea level "air" environment and 1/3 atmosphere oxygen environment represent two current approaches which have, apparently both been satisfactory for current missions. It is anticipated that other combinations and pressures will be useful for future spacecraft missions. These will require extensive ground based experiments and mission simulation prior to use in space flight.

The effects of long-term exposure to reduced pressures without reduction of the partial pressure of oxygen is unknown. Two to four week chamber runs at reduced pressure have not demonstrated detrimental effects directly attributable to the reduced pressure (79). Certainly no minimum pressure above the hypoxia level has been established for missions of 2 - 12 months. Sea level to 10,000 foot altitude equivalent total pressures should have minimum or no pressure effects for the duration of the mission but may not be practical for design reasons and certainly with a single gas atmosphere would result in oxygen toxicity. The pO_2 of 425 mm Hg analytically calculated by Mullinax and Beischer (80) as the upper limit of safe pO_2 is questionable in view of recent Republic studies which demonstrated hemopoietic and renal changes some of which persisted for many months after two weeks exposure to reduced pure oxygen atmospheres ($N_2 < 1.0$ mm Hg) of 7.4 psia, 5.0 psia and 3.8 psia (79).

Atelectasis was not detected during the Gemini atmospheric validation program in which exposure to pure oxygen for two weeks was combined with pre-post launch and re-entry simulations on a centrifuge. However, the effects of pure oxygen is not known for long exposures on the pulmonary parenchyma's ability to withstand or combat infection, allergies or irritation of noxious fumes. The effect of pure oxygen atmosphere under weightlessness has not been determined for missions longer than thirty-four hours. Atelectasis may develop during periodic g simulation in early space stations.

TABLE 12 . ENVIRONMENTAL FACTOR: CABIN ATMOSPHERE

	Function	Medical Significance	Anticipated Response	
			1°	2°
Psychological Performance	Sensation	2	0	++
	Psychomotor Processes	2	0	+
	Perception	2	0	+
	Higher mental processes	3	0	+
	Personality	3	0	++
Circulation	Pump	2	++	++
	Peripheral circulation	3	++	+
	Vasomotor control	3	+	++
Respiration	Pulmonary	1	+++	0
	Blood	3	0	++
	Tissue	3	0	++
Thermo-Regulation	Production	3	0	+
	Storage	3	0	0
	Dissipation	3	0	+
Neuromuscular activity	Motor coordination	2	+++	+
	Work metabolism ratio	3	0	0
Skeletal support	Integrity	3	0	0
	Movement	3	0	+
Digestion	Ingestion	3	0	0
	Digestion	3	0	++
	Absorption	3	0	++
	Excretion	3	0	0
Metabolism	Carbohydrate	3	0	+
	Fat	3	0	+
	Protein	3	0	+
Endocrine balance	Stress	3	0	+
	Reproduction	3	0	0
Fluid electro-lyte balance	Ingestion	3	0	0
	Regulation	3	0	0
	Excretion	3	0	0
Hematological response	Formation	1	++	0
	Activity	1	++	0
	Destruction	1	++	0
Immunological response	Tissue antibodies	3	0	0
	Circulating antibodies	3	0	0

Medical Significance

1 Required data
2 Desirable data
3 Non-essential data

Anticipated Primary (1°) or Secondary (2°) Response

0 Unlikely
+ Possible or unknown
++ Probable
+++ Definite

The physiological importance of nitrogen or any inert gas has not been established. Roth (81) in his recent review of oxygen toxicity made a careful survey of the effects of increased oxygen tension on intracellular enzyme systems. He reports that, in general, high oxygen tensions tend to inhibit enzymatic activity of the oxygen-dehydrogenase group (lactic, malic and succinic, and triphosphate-dehydrogenase, and cytochrome C reductase). Anything that increases activity of reducing agents protects against the oxygen effect. One aspect of the change is free radical formation similar to the effect of radiation. Increased oxygen tension appears also to inhibit hexokinase activity while nitrogen activates it. A previous Republic study (79) using pure oxygen for two weeks (Nitrogen < 1 mm Hg) suggests the possibility of a Primaquine-type "oxidative anemia" with an induced deficiency of glucose-6-phosphate-dehydrogenase and possibly some other unknown precursor deficiency which persisted for many months post-exposure. Experimentally it is extremely difficult to maintain a nitrogen free environment. If only a few mm Hg of nitrogen are required, experimental contamination would explain the inability to establish a physiological requirement for nitrogen. Assuming a pure source of make up oxygen, a space vehicle without any inboard leakage of nitrogen, will have much less nitrogen contamination than earthbound experiments.

The explosiveness of a decompression or, under less catastrophic conditions, the leak rate, is directly related to cabin pressure. It has been demonstrated that with higher pressures and a small penetration, or leak, effecting a decompression over a number of seconds or minutes, there is a longer period of useful consciousness for emergency action such as suit donning (61). However, in the event of a major decompression occurring in fractions of a second up to one or two seconds, the dangers of damage to the crew due to relative gas expansion in the gas filled organs is considerably greater with higher pressures. Dysbarism will be a negligible problem with a 100% oxygen system. Even with decompression of the capsule at launch, "bends" can be averted with denitrogenation for two to three hours prior to launch. With two gas systems decompression to 1/2 the initial cabin pressure is considered within safe limits.

Specific experiments conducted to determine the preoxygenation and equilibration necessary to avoid "bends" following decompression from 1/2

atmosphere (50% oxygen, 50% nitrogen) to 1/4 atmosphere have been conducted by the U. S. Navy. These studies indicate three hours of preoxygenation at sea level prior to such a decompression will effectively prevent "bends". It was also noted that without preoxygenation 18 hours in the 1/2 atmosphere environment described, provided adequate denitrogenation from the previous sea level air environment to decompress to 1/4 atmosphere safely. Finally, a combination of two hours denitrogenation at sea level followed by 12 hours at 1/2 atmosphere provided similar protection.

Thus, it would appear that with preoxygenation prior to launch, an unscheduled decompression from 1/2 atmosphere to suit pressure would present no serious hazards. An additional margin of safety could be provided by a variable pressure suit, reducing the suit pressure at a rate dependent on "bends" risk and mobility desired. Thus, the suit could be maintained at 1/3 of an atmosphere (100% oxygen) and, subsequently, reduced to 1/4 atmosphere to increase the mobility when all threats of "bends" have passed. A similar approach could provide immediate protection from "bends" in decompressing from one atmosphere to 1/2 and, subsequently, reducing the pressure to 1/3 or 1/4 atmosphere to enhance suit mobility.

Ideally, the space stations' gaseous environment should be the same as the space vehicle's environment that will be used for interplanetary travel, thereby eliminating cabin atmosphere as a variable in predicting the effects of protracted space flight from experimentation on the manned earth orbiting station. A space station artificial atmosphere compound of oxygen and nitrogen with the pO_2 between 160-170 mm Hg, pCO_2 less than 7 mm Hg, and a total pressure approximately 14.7 psia would provide a minimum of unusual responses to the gaseous environment and reduce the number of variables in the combined stresses of the space environment.

2. Psychological Aspects

The effects of the selected artificial atmosphere on human performance over prolonged durations should be determined using earth based simulations before the manned space stations are launched.

Should environmental control equipment fail, hypoxia might occur with behaviorally relevant effects. The effects of hypoxia might be measured as a safeguard against the possibility of degraded performance. A fairly immediate effect of hypoxia would be apparent in degradation of visual functions, especially night vision. Reaction time and speech might also be slowed. Higher mental processes would be impaired including reasoning, number facility, memory, attention, and judgment (82).

With the lack of atmospheric scattering of light out in space, there will be a marked increase in the intensity of light from direct or reflected sources and no or very little illumination from any surround. The lack of daylight illumination will tend to dark adapt the eyes after a short interval and this condition will cause intense lighting to produce glare under conditions of high contrast. In the space capsule itself artificial illumination should keep the eyes relatively light adapted and "diffusion shades" may be used to alleviate glare effects when the crew members look into space.

Acuity may be decreased by glare in space. Scotopic vision may be decreased by shifts in adaptation level. Color vision could also be degraded. Glare could be disruptive during various visual tasks including motion discrimination.

E. CONTAMINANTS (Table 13)

1. Physiological Aspects

A semi-closed ecological system for the manned space station requires consideration of contamination. Toxicants, both chemical and biological, may be expected to build up as a function of the mission duration requiring monitoring and flushing facilities. The sources of contamination are: (1) personnel, (2) materials and machinery and (3) from methods introduced to get rid of contaminants.

Space station sanitation, especially the water supply, will be critical. Acceptable standards for space station potable water have not been established. U. S. Navy Polaris submarine experience has demonstrated a marked decrease in the incidence of infectious diseases among crew members, probably due to the development of cross immunity. However, the potable water source and human waste disposal system are greatly simplified on a submarine compared to an earth orbiting space station. In addition, the space environment may alter microbials by changing virulence and mutation rate. Nonpathogenic organisms may become pathogens. Organisms which play an essential role in digestion may be unable to fulfill this task resulting in a disturbance of digestion, absorption, excretion and nutrition. Microbials produce noxious fumes and may have a direct corrosive effect on hardware. Plants used for gas exchange and nutrition may release a harmful substance like carbon monoxide or ethylene and affect the microflora. Hence, if these factors are not controlled there may be an increased incidence of diarrheal diseases, recurrent skin infection and, if the resistance of the host astronaut is affected, septicemia may occur.

Current industrial toxicology limits based on a 40-hour week will not be applicable to the 168 hour week exposure time of the astronauts. Threshold limits values are not stated from some compounds (indole, skatole, etc.) and others have a variable safety factor incorporated in them. Hemolytic anemia and Heinz body formation have occurred in animals exposed to indole, skatole, H_2S and MESH. H. Stokinger believes that threshold values to continuous exposure

Function		Medical Significance	Anticipated Response	
			1°	2°
Psychological performance	Sensation	3	++	0
	Psychomotor Processes	3	+	0
	Perception	3	+	0
	Higher mental processes	1	+	0
	Personality	3	0	0
Circulation	Pump	2	0	+
	Peripheral circulation	3	0	0
	Vasomotor control	3	0	0
Respiration	Pulmonary	1	++	0
	Blood	1	++	0
	Tissue	3	+	0
Thermo-Regulation	Production	3	0	0
	Storage	3	0	0
	Dissipation	3	0	0
Neuromuscular activity	Motor coordination	3	+	0
	Work metabolism ratio	3	0	0
Skeletal support	Integrity	3	0	0
	Movement	3	0	0
Digestion	Ingestion	2	+	+
	Digestion	2	+	0
	Absorption	3	0	0
	Excretion	3	0	0
Metabolism	Carbohydrate	3	0	0
	Fat	3	0	0
	Protein	3	0	0
Endocrine balance	Stress	3	0	0
	Reproduction	3	0	0
Fluid electrolyte balance	Ingestion	3	0	0
	Regulation	3	0	0
	Excretion	2	++	0
Hematological response	Formation	1	++	0
	Activity	1	++	0
	Destruction	1	++	0
Immunological response	Tissue antibodies	3	0	0
	Circulating antibodies	3	0	0

Medical Significance:

1 Required data
2 Desirable data
3 Non-essential data

Anticipated Primary (1°) or Secondary (2°) Response

0 Unlikely
+ Possible or Unknown
++ Probable
+++ Definite

should be reduced by a factor of 3 to 50 depending on the specific contaminant. He is particularly concerned about the synergistic effects of breathing pure oxygen. The Russian maximal allowable industrial concentrations of contaminants approach the smell threshold and are generally lower than U. S. standards. A list of some more important contaminants including industrial maximum allowable concentration, source and effects is given in Table 14.

In spite of the relatively minimal restrictions in size, weight, volume and power requirements of monitoring equipment in the Polaris submarine, the detection and identification of trace contaminants has been exceedingly difficult. Hence, even less is known about the biological significance of these contaminants. Two operational submarine missions were aborted because of the excessive lacrimation by the crew members due to methyl alcohol and from overheating of a lubricant.

Two recent closed chamber simulation runs were aborted because of contaminants. The NASA - Boeing 30-day "space cabin" experiment was terminated in five days. The test subjects had a variety of symptoms including nausea, lethargy, anorexia, obscured vision and bleeding gums. An experiment at Wright Patterson AFB was terminated because of a strong goat-like smell. The U. S. Navy Research Laboratory identified butyric acid among twenty-eight compounds isolated from the charcoal filter used in this experiment.

Human responses to the usual industrial toxicants are well known. Specific toxicants may cause pulmonary edema, impaired renal function, anemia, liver necrosis, neuromuscular dysfunction or affect central nervous system performance. However, the toxicity of the space station's atmosphere may be more subtle. The interactions of space environment factors, minute concentrations of a host of possible contaminants and individual susceptibility is unknown. Alterations in energy metabolism or enzyme activity may present complex clinical findings similar to inborn errors of metabolism. Therefore, it is essential that ground based simulators check out semi-closed life

TABLE 14. ATMOSPHERIC CONTAMINANTS

Contaminant	MAC** P. P. M.	MAC** MG/M^3	Source	Toxicity
Ammonia	100	70	Biological	Locally: irritation of eyes and mucous membranes Systemic: headache, nausea, coma, death
Asym-dimethyl-hydrazine	0.5		Fuel	Respiratory irritant, CNS stimulant
Boranes	0.1	0.1	Fuel	Pulmonary edema, CNS depression
Carbon disulfide	20	60	Human excretion, Solvent	Narcotic, facial vasodilatation irritability
Carbon monoxide	100	100	Human excretion CO_2 re-utilization exhaust	Anoxemia, headache
Carbon tetrachloride	10*	65	Freon, Exhaust	Irritation mucous membranes stupor, paresthesia, blood changes, visual disturbances
Fluorine	0.1	0.2	Oxidizer	Irritation mucous membranes, G. I. disturbances
Hydrazine	1	1.3	Fuel	C. N. S. irritant
Hydrocarbons	100		Fuel, solvent	Narcotic, ataxia, aplastic anemia
Hydrogen cyanide	10*	11	Plastics	Inhibits oxidation, headache, weakness
Hydrogen peroxide	1	1.4	Oxidizer	Respiratory irritant
Hydrogen sulfide	20	30	Human excretion, Organic waste	Sulfhemoglobin formation, irritant to lungs and eyes

* Skin Absorption

** Maximum allowable concentration (Conference of Government Industrial Hygienists, Washington 1962)
This is for industrial conditions 8 hours per day, 5 day/week

TABLE 14. ATMOSPHERIC CONTAMINANTS (cont'd)

Contaminant	MAC** P. P. M	MAC** MG/M^3	Source	Toxicity
Indole	10		Human waste	Odor - nausea
Mercury	0.01 (?)	0.1	Catalyst, Equipment	Psychic disturbances, tremors, stomatitis
Methanol	200	260	Human waste, Solvent	CNS depression, stupor, dizziness, G. I. depression
Methyl bromide	20*	80	Refrigerant, Fire extinguisher	Skin burn, bronchitis, CNS irritant
Nitric acid	10	25	Oxidizer	Irritation eyes, nose, throat, pulmonary edema
Nitrogen dioxide	5	9	Oxidizer	Pulmonary irritation, CNS depression
Ozone	0.1	0.2	Oxidizer, Radiation Effect on oxygen	Pulmonary irritation
Phenol	5	19	Human waste, Solvent, Plastics	Protoplasmic poison, corrosion of tissues
Phosgene	1	4	Breakdown of CN_4	Hydrolysis of tissue, corrosion
Skatote	10		Human waste	Odor - nausea
Sulfur dioxide	5	13	Human waste, Refrigerant	Pulmonary irritant
Toluene	200	750	Plastics, Solvent	Depression of bone marrow and CNS

* Skin Absorption

** Maximum allowable concentration (Conference of Government Industrial Hygienists, Washington 1962)
This is for industrial conditions 8 hours per day, 5 day/week

support systems to identify the contaminants and establish their biological significance. Otherwise the validity of weightlessness experimentation may be in jeopardy.

2. Psychological Aspects

Behaviorally relevant changes due to chemical and biological contaminants will be delayed and secondary in comparison with the effects assessed by biomedical measures. Contaminants with effects that are irreversible or slowly reversible would, in significant concentrations, make subjects ill. There could be narcosis, lowered sensitivity of the sensory systems, incoordination, impaired mental performance, and disturbed emotional reactions.

F. THERMAL ENVIORNMENT (Table 15.)

Heat balance under space station conditions depends on the interaction of many variables, which are indicated in Table 16. At normal operating temperatures radiative heat exchange, which accounts for 43% of the total heat loss (1,300 cal), is determined by the temperature of the walls. While the outside temperature will be very high on one side and very low on the other, insulation will probably be adequate to provide a fairly even inside wall temperature close to cabin temperature. Heat loss by conduction will be insignificant. Convective heat loss is about 30% of the total (900 cal.). This will be inhibited by the absence of gravitational convection, as discussed under weightlessness. Evaporative heat loss accounts for 21.5% of the total. 14.5% of this is due to evaporation from the skin. This will be considerably increased under space suit conditions. Warming of inspired air and heat content of feces and urine are minor factors which will change little under space conditions. The main effect of space on heat exchange will be due to the decreased metabolism. In Figure 7, the requirements for tolerance and comfort for aircraft are given. In accordance with the decreased metabolism, the comfort zone may be slightly higher, heat tolerance may show a small increase, and cold tolerance a small decrease. The hazards of exposure to heat are difficult to define due to great variability. Thermal stresses can be minimized by a well-controlled life support system.

Thermal stress will be imposed, however, during re-entry and in extravehicular activity. The most sensitive objective index is an increase of body temperature. In prolonged heat exposure, the leukocyte count is increased. Red blood count is increased, serum protein concentration is increased, and the concentration of sodium and chloride in serum and urine is decreased. Ill health and lack of sleep are marked predisposing factors. Adequate, but not excessive diet, with enhanced emphasis on carbohydrates and replacement of fluid and electrolyte loss, are important in prevention of serious effects.

Three distinct disorders are recognizable: (1) Heat cramps due to excessive loss of salt from the body, which lead to painful muscle cramps with

TABLE 15. ENVIRONMENTAL FACTOR: THERMAL ENVIRONMENT

Function		Medical Significance	Anticipated Response 1°	Anticipated Response 2°
Psychological performance	Sensation	3	+	+
	Psychomotor processes	3	+	0
	Perception	3	0	0
	Higher mental processes	3	0	+
	Personality	3	0	+
Circulation	Pump	1	0	+++
	Peripheral circulation	1	+++	+++
	Vasomotor control	1	+++	0
Respiration	Pulmonary	2	0	+++
	Blood	3	+++	+++
	Tissue	3	0	+++
Thermo-regulation	Production	1	+++	0
	Storage	1	+++	0
	Dissipation	1	+++	0
Neuromuscular activity	Motor coordination	3	+	0
	Work metabolism ratio	3	+	0
Skeletal support	Integrity	3	0	0
	Movement	3	0	0
Digestion	Ingestion	3	0	+
	Digestion	3	0	++
	Absorption	3	0	++
	Excretion	3	0	++
Metabolism	Carbohydrate	3	+++	0
	Fat	3	+++	0
	Protein	3	+++	0
Endocrine balance	Stress	2	++	+++
	Reproduction	3	+++	0
Fluid electrolyte balance	Ingestion	1	0	+++
	Regulation	1	+++	0
	Excretion	1	+++	0
Hematological response	Formation	2	++	0
	Activity	3	0	0
	Destruction	3	0	0
Immunological response	Tissue antibodies	3	0	+
	Circulating antibodies	3	0	+

Medical Significance

1. Required Data
2. Desirable Data
3. Non-essential data

Anticipated Primary (1°) or Secondary (2°) Response

0	Unlikely
+	Possible or Unknown
++	Probable
+++	Definite

TABLE 16. INTERRELATIONSHIP OF MAIN FACTORS WHICH DETERMINE HEAT EXCHANGE BETWEEN MAN AND ENVIRONMENT UNDER SPACE STATION CONDITIONS

	Metabolic Heat Production	Heat Gain or Loss By			
		Radiation	Conduction	Convection	Vaporization
Air temperature			X	XX	XX
Air movement				XX	XX
Specific heat of air			X	XX	
Air pressure (density)			X	X	X
Relative humidity				X	XX
Enthalpy of air			X	X	
Thermal conductivity of air			X	X	
Heat sink		XX	X		
Gravity				XX	XX
Mean rad temp of body		X			
Insulation by clothing		XX	X	XX	XX
Surface area of body	XX			XX	
Effective radiation area		XX			
Area of evaporative sweating					XX
Mean skin temperature	XX	XX	X	XX	
Core temperature of body	XX				XX
Available moisture for vaporization	X				XX

XX: Major Factor
X: Minor Factor

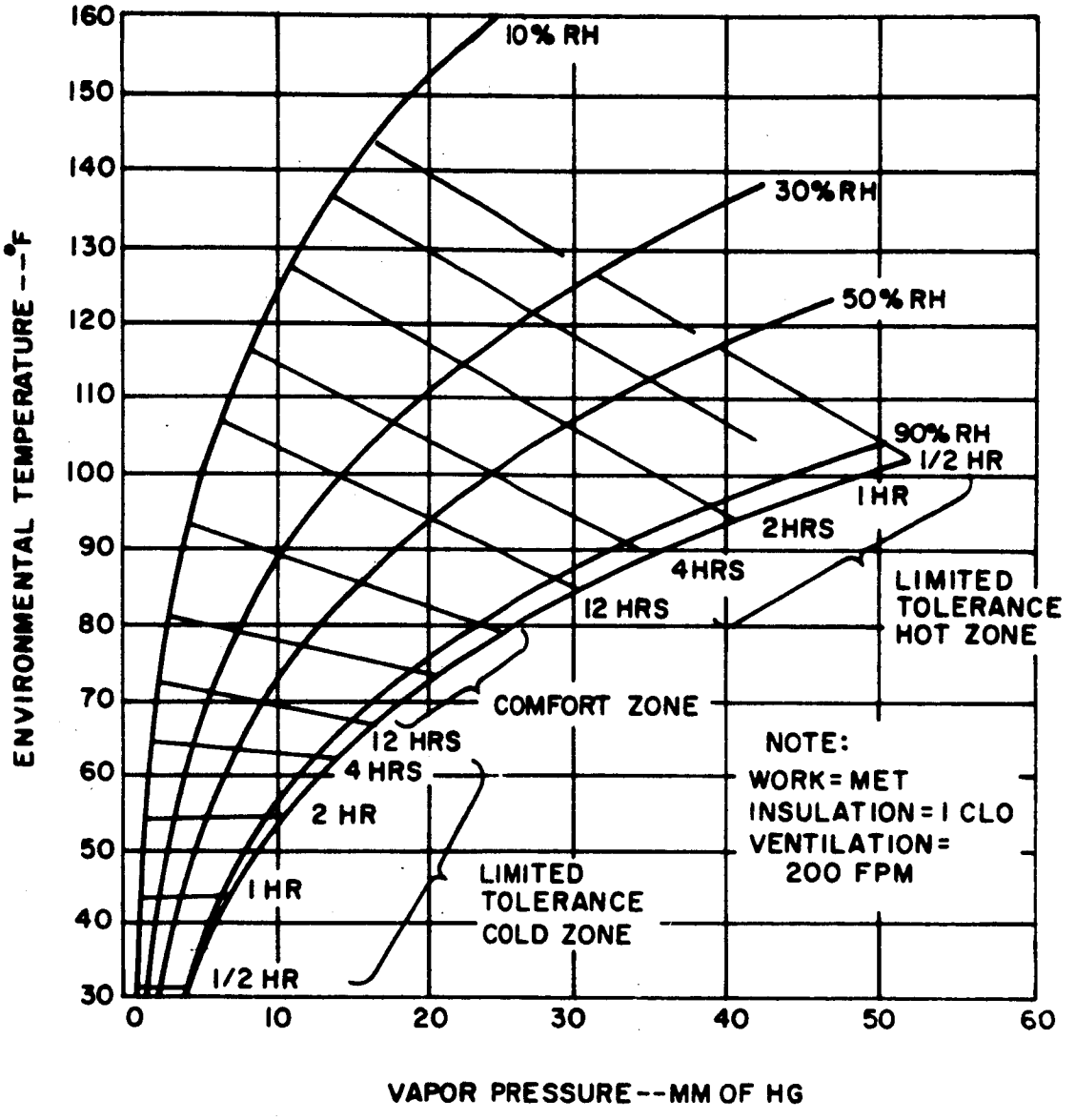

Figure 7. Thermal Requirements for Comfort Tolerance

pupillary constriction; (2) heat exhaustion due to loss of fluids and salt, causing cardio-vascular inadequacy and leading to mental confusion, headaches, fainting, rapid and weak pulse with low blood pressure, and cold, clammy skin; (3) heat stroke caused by a breakdown of temperature regulation with symptoms of high body temperature, hot and dry skin, rapid and deep respiration, prostration, delirium, and coma.

In cold stress the temperature of the extremities falls first. Skin and rectal temperature fall earlier than the temperature of the face. Metabolic rate increases largely due to shivering. Urinary excretion is increased with high chloride concentration and transient ketonuria. Blood pH is increased, blood volume is decreased and hematocrit and fasting blood sugar are increased.

The types of changes which occur with extreme cold are decreases in somesthetic and kinesthetic sensitivity, which could have detrimental effects on motor performance. The effects of heat on performance in space are probably similar to those well established on Earth.

G. CIRCADIAN RHYTHMS (Table 17)

The periodicities of the mechanisms by which organisms mark the passage of time and synchronize their functions are generally termed circadian rhythms. These rhythms may be either endogenous or exogenous to the organism and either inalterable or alterable. The general types of circadian rhythms may arbitrarily be divided into the following general categories (47):

1) The periodicity continues and remains unchanged.
2) The periodicity continues but with a frequency deviating by a relatively constant amount from the baseline frequency.
3) The periodicity ceases suddenly or is damped out within a few periods or becomes unobservable.

The factors of the external environment (termed "Zeitgeber") have several effects on the organism. They synchronize a circadian periodicity with the environment and tend to synchronize individuals of one species and keep them in phase. Zeitgeber also influences the circadian patterns of multiple rhythms in an organism by determining the phase relationships of these several rhythms. Only those factors of the environment which display periodicity can operate as a Zeitgeber. Since a single event can influence the phase of a rhythm, several rhythms running out of phase with each other can be brought into coincidence for a limited period by a single event; therefore, only repeated single events can operate as a Zeitgeber. Thus, a Zeitgeber can be either alternating steady state conditions or continuously changing conditions. (See sketch below)

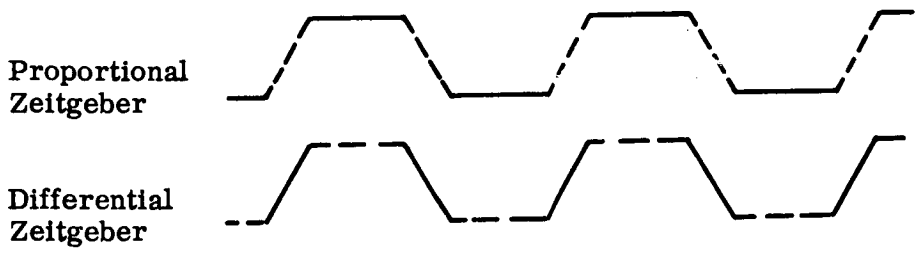

TABLE 17. ENVIRONMENTAL FACTOR: CIRCADIAN RHYTHMS

Function		Medical Significance	Anticipated Response 1°	Anticipated Response 2°
Psychological performance	Sensation	3	0	0
	Psychomotor processes	3	0	+++
	Perception	2	0	+
	Higher mental processes	3	0	+
	Personality	2	0	++
Circulation	Pump	2	+++	0
	Peripheral circulation	3	0	+
	Vasomotor control	2	0	+++
Respiration	Pulmonary	2	+++	0
	Blood	3	0	0
	Tissue	3	0	0
Thermo-Regulation	Production	2	+++	0
	Storage	3	0	+++
	Dissipation	3	0	+++
Neuromuscular activity	Motor coordination	3	0	0
	Work metabolism ratio	3	0	0
Skeletal support	Integrity	3	0	0
	Movement	3	0	0
Digestion	Ingestion	3	0	+++
	Digestion	3	0	0
	Absorption	3	0	0
	Excretion	3	0	0
Metabolism	Carbohydrate	2	0	+
	Fat	2	0	+
	Protein	2	0	+
Endocrine balance	Stress	2	++	0
	Reproduction	2	++	0
Fluid electro-lyte balance	Ingestion	3	0	++
	Regulation	3	0	++
	Excretion	2	+++	0
Hematological response	Formation	2	++	0
	Activity	3	0	0
	Destruction	3	0	++
Immunological response	Tissue antibodies	3	0	0
	Circulating antibodies	3	0	0

Medical Significance

1 Required data
2 Desirable data
3 Non-essential data

Anticipated Primary (1°) or Secondary (2°) Response

0 Unlikely
+ Possible or Unknown
++ Probable
+++ Definite

Within any conditions the actuating parameter may be either the steady state itself, a proportional effect, or the transition from the steady state, a differential effect. Combinations of both cases may also be possible. In a proportional effect the response to the stimulus of the Zeitgeber in its steady state is proportional to the reaction elicited in the organism. The effect continues steadily as long as the intensity is unchanged. In the differential case the effect depends only on changing factors of the environment with the steady state having no effect. At present no decision is possible as to whether the natural Zeitgeber operate proportionally or differentially.

The autonomy and potential dissociability of distinct components in the circadian responses are the critical questions to be answered. The normal temporal organization of the body involves the maintenance of identical frequencies among the several body systems and maintenance of appropriate mutual phasing. The natural environment appears to phase the body systems relative to environmental changes and, in so doing, imposes uniformity of frequency on the multiple endogenous oscillations. In the absence of external cycles the integrity of the circadian organization depends exclusively on the mutual entrainment of individual oscillations to maintain both frequency and phase relationships in the body systems. The mutual entrainment of constituent oscillations is sufficiently strong to maintain adequate organization even in rigorously constant conditions. However, these conditions are often detrimental resulting in damage due to a disruption of the innate circadian organization. The breakdown is probably due to failure of mutual entrainment among constituent oscillatory body systems leading to dissociation and loss of the normal phase relationships.

The existence of rhythmicities in humans has been detected in many functions. Past experimental efforts have placed great emphasis on the interrelatedness of body temperature and other body functions. Heat production is affected by muscular activity, food intake, and sleep which are normally unequally distributed over a 24-hour period (83). With the alteration of these activities in the space station, there is reason to expect changes in body thermal regulation and subsequent changes in performance. Peak performance has been found to correspond to increased body temperature, generally being best when body temperature is highest,

and poorest when temperature is lowest. It has been demonstrated (54) that the diurnal body temperature rhythm in man is developed by adaptation and maintained through adherence to the socially prevalent routine of living and can be shifted or completely reversed by changes in the daily routine. The success in altering body temperature curves, however, is highly dependent upon individual variability (84). The inversion of the body temperature curve can more easily be accomplished when the external conditions are such as not to be interfering influences.

Until additional evidence is available, it is impossible to determine the causitive factor or factors that contribute to the fixity of the cycle. Age is one possible factor. Whether the mechanism of the establishment and maintenance of the diurnal cycle is nervous or endocrine, or a combination of both, is not yet known. Since an individual's performance curve follows his body temperature curve (83), considerations of efficiency in doing work demand only individuals who are capable of shifting or inverting their diurnal body temperature curves on short notice be utilized for abnormal sleep-wakefulness cycles. The extent to which a 24-hour sleep-wakefulness cycle is necessary is highly correlated to the individual's ability to adapt.

Associated with and apparently running parallel to the rhythmic body temperature curve is the heart rate (14, 85). It is possible to invert the diurnal heart rate by reversing the living routine which causes an inversion of the body temperature cycle. The variation of the heart rate probably represents a complex periodicity which depends directly upon body temperature wherein a change of 1°F can cause a variation of heart rate of 10 beats per minute. Blood pressure exhibits a rhythmicity with the lowest values being recorded at night (86). That this is independent of sleep is indicated by the results of experiments in which the subjects were kept awake. Russian observations (36) of their cosmonauts indicated that the dynamics of pulse rate appeared to be related to the diurnal cycle which affected the auriculoventricular conduction, electric systole, and the systole index.

Blood chemistry changes during the normal 24-hour period and is partially related to the food intake cycle and, therefore, with the mode of existence. Two waves of variations have been found in granulocytes: one crest after midnight and one in the afternoon. These waves are independent of food intake, exercise, or sleep. Hemoglobin, hematocrit, and plasms protein exhibit regular diurnal curves. Plasma protein shows no significant changes during the usual waking hours, but after 10:00 p.m. drops markedly and independently of bed rest. Plasma iron is highest in the early morning, falls during sleep and appears to be independent of the initial plasma iron level.[87] Blood bilirubin content exhibits a bimodal distribution with peaks at noon and midnight with the lowest values at 8:00 a.m. and 8:00 p.m. Kleitman (83) quotes Holmgren as finding serum calcium is at a maximum during the night and corresponds to minimal adrenaline concentration in the blood.

Urinary excretion appears to follow the diurnal body temperature curve with a decrease in pH and an increase in acid excretion during the night (88, 89). Chloride appears to follow the excretory rhythm except for a marked rise in the morning (90). Total urinary nitrogen reaches a maximum between 8:00 to 10:00 a.m. and is lowest at night (91, 92). Uric acid excretion is a minimum at night and reaches a maximum in the morning (90). Ammonia excretion is maximum at night (91). Phosphate excretion is a maximum in the afternoon with the minimum between 7:00 to 11:00 a.m. The incidence of food intake seems to be an important factor, but the excretion is greater during the first half of the night than the second half.

In conclusion, it must be remembered that the rhythms that are of primary concern are those which are inalterable and endogenous for these will have a definite influence on the activities and functioning of the crew. The influence of the alterable endogenous and exogenous rhythms will be dependent upon the rate at which the adaptation to the altered rhythm proceeds and the degree to which the alterable rhythms secondarily affect the inalterable rhythms.

R. Levine indicates that the circadial rhythmicity may play a vital role in the control of endocrine glands. Possibly the absence of rhythmic metabolic

activity may cause an increase in the output of the adrenal gland. For example in Cushings disease, total ACTH/24 hrs is not increased, but the normal rhythmic variation in output is altered.

Circadian rhythms of body functions may shift in phase with shifts in duty cycles. During the period of transition required to man the watch, psychological orientation in time, ability to judge the passing of long intervals of time, and performance of skills that require the use of the "time sense" may be impaired. [43] Changes in phase length are not always adapted to in the same way -- various parameters may "free-run" possibly prolonging the above types of impairment.

H. PSYCHOPHYSIOLOGICAL FACTORS (Table 18.)

1. Restricted Volume and Confinement

Effects of restricted volume and confinement are mainly perceptual and emotional. They involve restriction of accustomed activity and mutual interference in activities among several people. It has been reported in the literature on sensory deprivation that sensory perceptions are distorted. It would be expected, on this basis, that restricted volume and confinement would over long time periods elicit a similar effect. It is likely that irritability and boredom will be increased and the desire for change, frustrated by the enforced confinement of the space capsule, will tend to lower morale.

2. Isolation, Social Restriction, and Reduced Environmental Stimulation

Isolation, social restriction, and reduced environmental stimulation are factors which may have serious effects on behavior unless steps are taken to alleviate them. Some of these measures may be well planned activity schedules, personal radio and TV contacts, and provisions for privacy (and optionally plants, small animals and appetizing food). If space station flight conditions are like the "sensory deprivation" experiment conditions which have been reported, such responses as lowered light intensity thresholds, disturbance of motion discrimination, and altered time perception may occur.

3. Cognitive and Personality Factors

Analysis of interpersonal relationships in isolated voluntary small groups committed to fixed periods of isolation such as a "small" submarine or at antarctic bases provides information relevant to long-term space flight (61). Responses in such situations proceed through three phases. The first period is marked by heightened anxiety leading to increased activity. The second period is the longest and is marked by depression which may increase periodically for some subjects. However, the depression does not interfere with assigned tasks. This depression is considered to be largely due to repression in that most of a subjects normal roles in society are not exercised in isolation. In repressing thoughts about latent roles the work or occupational role becomes highly valued and the

TABLE 18. ENVIRONMENTAL FACTOR: PSYCHOPHYSIOLOGICAL FACTORS

		Medical Significance	Anticipated Response	
			1°	2°
Psychological performance	Sensation	3	0	0
	Psychomotor processes	3	0	0
	Perception	2	0	+
	Higher mental processes	2	0	+
	Personality	2	0	+++
Circulation	Pump	2	0	++
	Peripheral circulation	2	0	++
	Vasomotor control	2	0	++
Respiration	Pulmonary	2	0	++
	Blood	3	0	+
	Tissue	3	0	+
Thermo-Regulation	Production	3	0	+
	Storage	3	0	+
	Dissipation	2	0	++
Neuromuscular activity	Motor coordination	2	0	+
	Work metabolism ratio	3	0	0
Skeletal support	Integrity	3	0	0
	Movement	3	0	0
Digestion	Ingestion	3	0	0
	Digestion	2	0	+
	Absorption	3	0	+
	Excretion	3	0	0
Metabolism	Carbohydrate	2	0	+
	Fat	2	0	+
	Protein	2	0	+
Endocrine balance	Stress	2	0	++
	Reproduction	3	0	0
Fluid electro-lyte balance	Ingestion	3	0	0
	Regulation	3	0	0
	Excretion	2	0	+
Hematological response	Formation	3	0	0
	Activity	3	0	0
	Destruction	3	0	0
Immunological response	Tissue antibodies	3	0	0
	Circulating antibodies	3	0	0

Medical Significance

1 Required data
2 Desirable data
3 Non-essential data

Anticipated Primary (1°) or Secondary (2°) Response

0 Unlikely
+ Possible
++ Probable
+++ Definite

subject guards jealously the work activity attendant to that role. The repression of sex impulses occurring under these circumstances seems to be correlated with a corresponding increased interest in food. Although various types of "constructive" leisure time activities are usually planned by subjects, there is a definite tendency for these types of activities to be displaced by simple more basic activities such as talking and card playing. During this period, hostility toward group members is inhibited and tends to be displaced toward people outside the group (in this case the hostilities would tend to be directed toward ground personnel). The inhibition of hostility is partly due to fear of social isolation from the rest of the group. An increased awareness of minute physical stimuli also occurs, that is, awareness of stimuli that would not ordinarily be attended to.

The third period develops when subjects are near the end of the isolation period. There is increased expression of emotion including hostility, greater likelihood of aggressive behavior, and more anticipatory behavior. At this time working habits deteriorate so that errors in scientific observation are increased. Also, housekeeping and other daily routine chores tend to be neglected and anxieties tend to replace depression. Subjects behave in an adolescent manner with considerable bragging - when they feel they have achieved the set goal. It is likely that astronauts will exhibit similar patterns of behavior in some degree.

Also, if sensory deprivation experiments are predictive of space flights responses, decreased sensory variety might affect judgment, be unpleasant, cause irritability, boredom, lead to production of fantasies as a substitute for "normal" stimulation and lead to apathy and decrease morale.

I. SUMMARY

Table 19 summarizes the medical ratings for all environmental factors. Tables 20 and 21 give the means for all horizontal and vertical columns; and, the number of 1, 2, and 3 ratings and the highest rating for each item. This indicates that weightlessness is considered the most important factor from the monitoring point of view. Radiation appears to be relatively unimportant. This, obviously, does not indicate the importance of radiation, but rather the difficulty of monitoring the human response directly, as discussed in the radiation section.

Higher mental processes, the heart, the peripheral circulation, vasomotor control, and pulmonary function appear as the most significant factors in the functional evaluation. However, a single rating of 1 may be adequate reason to include the particular factor in the monitoring system.

Due to the many monitoring tasks and the few subjects available, it is considered important to obtain extensive preflight control data. Many of the proposed responses will become meaningful only if each subject's preflight data can serve as control for possible in-flight changes.

A certain limitation is also imposed by the attempt to consider each environmental factor as a separate entity. No doubt, interaction between various space-environmental conditions may change the sensitivity of the subject. If this is a matter of degree of sensitivity, it will not affect the monitoring requirement. If the interaction should bring out some physiological reactions not brought about by the individual factors, this approach will be deficient in this respect. However, such a deficiency cannot be foreseen at this time and the only approach to cover such an eventuality would be a systematic monitoring of all possible physiological changes, which is a practical impossibility. However, this does indicate the need of constant re-evaluation as more information on man's response to space becomes available.

TABLE 19. SUMMARY, MEDICAL SIGNIFICANCE

Function	Environmental Factors	Weightlessness	Dynamic Factors	Ionizing Radiation	Cabin Atmosphere	Contaminants	Thermal Environment	Circadian Rhythms	Psychophysiological Factors
Psychological performance	Sensation	1	1	3	2	3	3	3	3
	Psychomotor processes	1	1	3	2	3	3	3	3
	Perception	1	1	3	2	3	3	2	2
	Higher mental processes	2	2	3	3	1	3	3	2
	Personality	1	2	3	3	3	3	2	2
Circulation	Pump	1	1	3	2	2	1	2	2
	Peripheral circulation	1	1	3	3	3	1	3	2
	Vasomotor control	1	1	3	3	3	1	2	2
Respiration	Pulmonary	2	1	3	1	1	2	2	2
	Blood	2	3	3	3	1	3	3	3
	Tissue	3	3	3	3	3	3	3	3
Thermoregulation	Production	3	3	3	3	3	1	2	3
	Storage	3	3	3	3	3	1	3	3
	Dissipation	3	3	3	3	3	1	3	2
Neuromuscular activity	Motor coordination	1	1	3	2	3	3	3	2
	Work metabolism ratio	1	3	3	3	3	3	3	3
Skeletal support	Integrity	1	3	3	3	3	3	3	3
	Movement	2	2	3	3	3	3	3	3
Digestion	Ingestion	2	2	3	3	2	3	3	3
	Digestion	2	3	3	3	2	3	3	2
	Absorption	3	3	3	3	3	3	3	3
	Excretion	2	3	3	3	3	3	3	3
Metabolism	Carbohydrate	1	3	3	3	3	3	2	2
	Fat	3	3	3	3	3	3	2	2
	Protein	1	3	3	3	3	3	2	2
Endocrine balance	Stress	2	2	3	3	3	2	2	2
	Reproduction	3	3	2	3	3	3	2	3
Fluid electrolyte balance	Ingestion	1	3	3	3	3	1	3	3
	Regulation	1	3	3	3	3	1	3	3
	Excretion	1	3	3	3	2	1	2	2
Hematological response	Formation	3	3	1	1	1	2	2	3
	Activity	3	3	2	1	1	3	3	3
	Destruction	3	3	3	1	1	3	3	3
Immunological response	Tissue antibodies	3	3	3	3	3	3	3	3
	Circulating antibodies	3	3	3	3	3	3	3	3

Function		Mean	Number			Highest Rating
			1	2	3	
Psychological performance	Sensation	2.38	2	1	5	1
	Psychomotor processes	2.38	2	1	5	1
	Perception	2.13	2	3	3	1
	Higher mental processes	2.38	1	3	4	1
	Personality	2.38	1	3	4	1
Circulation	Pump	1.88	3	3	2	1
	Peripheral circulation	2.13	3	1	4	1
	Vasomotor control	2.00	3	2	3	1
Respiration	Pulmonary	1.75	3	4	1	1
	Blood	2.63	1	1	6	1
	Tissue	3.00	0	0	8	3
Thermoregulation	Production	2.63	1	1	6	1
	Storage	2.75	1	0	7	1
	Dissipation	2.63	1	1	6	1
Neuromuscular activity	Motor coordination	2.25	2	2	4	1
	Work metabolism ratio	2.75	1	0	7	1
Skeletal support	Integrity	2.75	1	0	7	1
	Movement	2.75	0	2	6	2
Digestion	Ingestion	2.63	0	3	5	2
	Digestion	2.63	0	3	5	2
	Absorption	3.00	0	0	8	3
	Excretion	2.88	0	1	7	2
Metabolism	Carbohydrate	2.50	1	2	5	1
	Fat	2.75	0	2	6	2
	Protein	2.50	1	2	5	1
Endocrine balance	Stress	2.38	0	5	3	2
	Reproduction	2.75	0	2	6	2
Fluid electrolyte balance	Ingestion	2.50	2	0	6	1
	Regulation	2.50	2	0	6	1
	Excretion	2.13	2	3	3	1
Hematological response	Formation	2.00	3	2	3	1
	Activity	2.38	2	1	5	1
	Destruction	2.50	2	0	6	1
Immunological response	Tissue antibodies	3.00	0	0	8	3
	Circulating antibodies	3.00	0	0	8	3

TABLE 21. MEANS OF ENVIRONMENTAL RESPONSE

	Weightlessness	Dynamic Factors	Radiation	Cabin Atmosphere	Contaminants	Temperature	Circadian Rhythms	Psychophysiological Factors	Totals
Mean	1.91	2.40	2.89	2.66	2.54	2.40	2.63	2.57	
No. 1	15	8	1	4	6	9	0	0	43
No. 2	8	5	2	4	4	3	13	15	54
No. 3	12	22	32	27	25	23	22	20	183

SECTION IV

SELECTION OF MEASUREMENTS

A. INTRODUCTION

The previous section has considered physiological and psychological functions in relation to the space environment, and has provided ratings of the order of the expected importance of the responses to the environment. The objective of this measurement study phase is to provide biomedical and human factors measurement techniques for the rated expected responses to the environment. In support of this purpose, an expanded outline is given in separate biomedical and psychological subsections which show selected measurements needed for evaluation of the human physiological functions and psychological performances under the space environmental conditions. In these outlines, the measurements are rated against a criterion of expected response criticality: Class 1, required data; Class 2, desired data; Class 3, non-essential data. Information follows in each subsection in which the biomedical and human factors measurements are listed, described, and discussed with respect to the utility of the measurement techniques and instrumentation for securing the required data and feasibility of practical implementation into the space station systems.

Pertinent specifications of the recommended and alternate measurement methods are discussed. These characteristics should facilitate (1) the definition of requirements on space station design, crew, mission duration, and logistics, (2) the implementation of the measurements into an experimental program, and (3) the conduct of trade-off studies. Also, a suggested medical and psychological history and a physical examination to be conducted on a space station are described.

B. PHYSIOLOGICAL FUNCTIONS AND MEASUREMENTS

To ensure that all of the important physiological functions were considered, the functions were broken down, when applicable, into their major structural elements. These, in turn, were broken down into activities or qualities that are capable of being measured. In addition, a history and physical examination were outlined. These, together with the master measurement list, provided a comprehensive means of obtaining the necessary information regarding man's anticipated responses. The history and physical examination are presented in a following section. The outline of physiological functions and measurements is presented below. The Class 1 and Class 2 measurements are indicated for each environmental factor.

TABLE 22 . PHYSIOLOGICAL FUNCTIONS AND MEASUREMENTS: A PRIORITY RATING

Function	Measurement	Environment Factors								
Class 1: Required Class 2: Desired Class 3: Non-Essential		Summary of Responses	Weightlessness	Dynamic Factors	Ionizing Radiation	Cabin Atmosphere	Contaminants	Thermal Environment	Circadian Rhythms	Psycho-Physiological Factors
<u>Psychophysiological</u>										
I Cortex										
A.	Electrical Activity Electroencephalogram	2	2						2	
B.	Morphology	3								
II Cerebral Spinal Fluid										
	Pressure, Cell Count, Protein, Sugar, Electrolytes	3								

TABLE 22 . PHYSIOLOGICAL FUNCTIONS AND MEASUREMENTS: A PRIORITY RATING (cont'd)

Function / Measurement	Summary of Responses	Weightlessness	Dynamic Factors	Ionizing Radiation	Cabin Atmosphere	Contaminants	Thermal Environment	Circadian Rhythms	Psycho-Physiological Factors
Class 1: Required Class 2: Desired Class 3: Non-Essential									
III Ocular Apparatus	3								
A. Electrical Activity									
1. Electroretinogram	3								
2. Electrooculogram	3								
B. Pressure									
Oculotonometry	3								
Circulation									
I Pump (Heart)									
A. Electrical Activity									
Rate, Rhythm, Amplitude									
Electrocardiogram	1	1	1		2		1	2	2
B. Mechanical Activity									
1. Heart Sounds									
Phonocardiogram	2	2	2						
2. Contractive Impulse									
Vibrocardiogram	2	2	2						
Ballistocardiogram	2	2							
C. Work Output									
1. Pressure									
Ventricular	3								
2. Flow									
Cardiac output	2	2	2						

TABLE 22. PHYSIOLOGICAL FUNCTIONS AND MEASUREMENTS: A PRIORITY RATING (cont'd)

Function / Measurement	Summary of Responses	Environment Factors: Weightlessness	Dynamic Factors	Ionizing Radiation	Cabin Atmosphere	Contaminants	Thermal Environment	Circadian Rhythms	Psycho-Physiological Factors
Class 1: Required Class 2: Desired Class 3: Non-Essential									
D. Morphology									
1. Size	3								
2. Contour	3								
3. Microscopic	3								
E. Nutrition									
1. Coronary Flow	3								
2. Cytochemical	3								
II Peripheral Circulation									
A. Pressure									
1. Arterial Central Peripheral	1	1	1				1		2
2. Venous Central Peripheral	2	2							
B. Blood Flow									
1. Regional Flow	1	1					1		
2. Circulation time	3								
C. Pulse Propagation									
1. Pulse wave velocity	2	2							
2. Pulse Contour	2	2							
D. Blood Volume	2	2							

TABLE 22. PHYSIOLOGICAL FUNCTIONS AND MEASUREMENTS: A PRIORITY RATING (cont'd)

Function / Measurement	Summary of Responses	Environment Factors: Weightlessness	Dynamic Factors	Ionizing Radiation	Cabin Atmosphere	Contaminants	Thermal Environment	Circadian Rhythms	Psycho-Physiological Factors
Class 1: Required Class 2: Desired Class 3: Non-Essential									
III Vasomotor Control									
A. Peripheral Vasomotor Tonus	1	1	1				1	2	2
B. Heart rate, peripheral arterial pressure	1	1	1				1	2	2
Respiratory									
I Pulmonary									
A. Mechanics									
1. Respiratory Rate	1	2	1		1	1	2	2	2
2. Tidal Volume	1	2	1		1	1		2	
3. Vital Capacity (timed)	1	2			1	1			
4. Inspiratory Reserve Volume	3								
5. Expiratory Reserve Volume	3								
6. Residual Volume	3								
7. Compliance	3								
B. Gas Exchange									
1. Nitrogen washout	3								
2. Expiratory gas analysis	2	2			2	2			
3. O_2 Diffusion Capacity	3								
C. Regulation of Ventilation									
1. Respiration rate	1	2	1		1	1	2	2	2
2. Chemoreceptors	2	2	2		2	2			

TABLE 22 . PHYSIOLOGICAL FUNCTIONS AND MEASUREMENTS: A PRIORITY RATING (cont'd)

Function / Measurement	Environment Factors								
Class 1: Required Class 2: Desired Class 3: Non-Essential	Summary of Responses	Weightlessness	Dynamic Factors	Ionizing Radiation	Cabin Atmosphere	Contaminants	Thermal Environment	Circadian Rhythms	Psycho-Physiological Factors
D. Distribution of Blood, Air	3								
E. Pulmonary Circulation	3								
F. Structural Integrity	3								
G. Non-respiratory	3								
1. Heat	3								
2. Humidity	3								
3. Cleansing X-ray sinuses	3								
II Blood									
A. Arterial pO_2	3								
B. Venous pO_2	3								
C. End Tidal pCO_2	2	2							
D. Blood pigments, abnormal	1					1			
III Tissue Respiration	3								
Thermoregulation									
I Production	1						1	2	
II Storage	1						1		
III Dissipation									
A. Surface temperature	1						1		2

TABLE 22. PHYSIOLOGICAL FUNCTIONS AND MEASUREMENTS: A PRIORITY RATING (cont'd)

Function / Measurement	Environment Factors								
Class 1: Required Class 2: Desired Class 3: Non-Essential	Summary of Responses	Weightlessness	Dynamic Factors	Ionizing Radiation	Cabin Atmosphere	Contaminants	Thermal Environment	Circadian Rhythms	Psycho-Physiological Factors
B. Core temperature	1						1		
1. Oral									
2. Rectal									
3. Tympanic membrane									
C. Sweat Production	3								
<u>Neuromuscular Activity</u>									
A. Electrical Activity									
1. Surface electromyogram	2	2							
2. Recruitment rate	2	2							
3. Indwelling needle electromyogram	3								
4. Muscle stimulation response time	3								
B. Mechanical Activity									
1. Muscle tone, rate of recruitment	2	2							
2. Muscle strength	2	2							
C. Psychomotor Activity									
1. Fine Motor Coordination	1	1	1		2				2
2. Gross Motor Coordination	1	1	1		2				

TABLE 22 . PHYSIOLOGICAL FUNCTIONS AND MEASUREMENTS: A PRIORITY RATING (cont'd)

Function / Measurement	Environment Factors								
Class 1: Required Class 2: Desired Class 3: Non-Essential	Summary of Responses	Weightlessness	Dynamic Factors	Ionizing Radiation	Cabin Atmosphere	Contaminants	Thermal Environment	Circadian Rhythms	Psycho-Physiological Factors
D. Structural Integrity									
1. Gross									
Muscle size	1	1							
Muscle mass	1	1							
2. Cytochemical									
Myoglobin (serum)	3								
Creatine/creatinine (urine)	1	1							
II Work Metabolism Relationship									
A. Work Load									
1. Ergometer	2	2							
2. Dynamometer	2	2							
B. Metabolic Activity									
1. Oxygen consumption	1	1							
2. Lactic acid (blood)	3								
3. Pyruvic acid (blood)	3								
Skeleton Support									
I Integrity									
A. Mineralization									
1. Calcium									
Blood	2	2							
Urine	1	1							

TABLE 22. PHYSIOLOGICAL FUNCTIONS AND MEASUREMENTS: A PRIORITY RATING (cont'd)

Function / Measurement	Environment Factors								
Class 1: Required Class 2: Desired Class 3: Non-Essential	Summary of Responses	Weightlessness	Dynamic Factors	Ionizing Radiation	Cabin Atmosphere	Contaminants	Thermal Environment	Circadian Rhythms	Psycho-Physiological Factors
2. Phosphorus									
Blood	2	2							
Urine	2	2							
3. Nitrogen (urinary)	1	1							
4. X-ray density	3	3							
5. Control of mineralization and serum calcium Parathormone assay	3								
6. Kinetics of mineralization Ca^{45} washout of labelled bones	3								
II Movement									
A. Joint range of motion	2	2	2						
B. Skeletal integrity (articular areas)	3								
Digestion									
I Ingestion									
II Digestion									
A. Secretory activity	2	2	2			2			
1. Gastric acidity (gastric analysis)	3								

TABLE 22. PHYSIOLOGICAL FUNCTIONS AND MEASUREMENTS: A PRIORITY RATING (cont'd)

Function / Measurement	Summary of Responses	Environment Factors: Weightlessness	Dynamic Factors	Ionizing Radiation	Cabin Atmosphere	Contaminants	Thermal Environment	Circadian Rhythms	Psycho-Physiological Factors
Class 1: Required Class 2: Desired Class 3: Non-Essential									
2. Gastric proteolytic enzyme activity	3								
3. Pancreatic enzyme activity	3								
4. Response mechanism Histamine stimulation Ewald's meal	3								
B. Intestinal Motility									
1. Pressure	3								
2. Bowel sounds	3								
3. Passage of tagged substances Dyes Radioisotopes	2	2							
C. Accessory Organs									
1. Liver function									
Serum proteins	2	2							
Brom-sulfo-phthalein	3								
Serum bilirubin	2	2				2			
Thymol turbidity	3								
Alkaline phosphatase	3								
D. Intestinal Flora									
1. Fecal microscopic examination	3								
2. Fecal cultures	3								

TABLE 22 . PHYSIOLOGICAL FUNCTIONS AND MEASUREMENTS: A PRIORITY RATING (cont'd)

Function / Measurement	Summary of Responses	Weightlessness	Dynamic Factors	Ionizing Radiation	Cabin Atmosphere	Contaminants	Thermal Environment	Circadian Rhythms	Psycho-Physiological Factors
Class 1: Required Class 2: Desired Class 3: Non-Essential	Environment Factors								
III Absorption									
A. Fecal Analysis									
1. Carbohydrates	3								
2. Fats	3								
3. Proteins	3								
4. Occult Blood	2	2		2					
B. Tagged ingested materials	3								
IV Excretion	2	2							
Metabolism									
I Carbohydrate									
A. Blood Sugar	1	1						2	
B. Insulin	3								
C. Adrenal glucocorticosteroids	2	2						2	2
II Fat									
A. Fat transport	3								
B. Nonesterified fatty acids	3								
C. Serum lipids	3								
III Protein									
A. Nitrogen Balance Urinary nitrogen	1	1						2	2

TABLE 22. PHYSIOLOGICAL FUNCTIONS AND MEASUREMENTS: A PRIORITY RATING (cont'd)

Function / Measurement	Summary of Responses	Weightlessness	Dynamic Forces	Ionizing Radiation	Cabin Atmosphere	Contaminants	Thermal Environment	Circadian Rhythms	Psycho-Physiological Factors
Class 1: Required Class 2: Desired Class 3: Non-Essential									
IV Total Body Mass	1	1						2	2
V Protein Bound Iodine	3								
Endocrine Balance									
I Stress									
A. Urinary glucocorticosteroids	2	2	2				2	2	2
B. Urinary catecholamines	2	2	2				2	2	2
C. Eosinophil counts	3								
II Reproduction									
A. Testicular biopsy	3								
B. Sperm count, motility	3								
Fluid Electrolyte Balance									
I Ingestion Intake and Output	1	1					1		
II Regulation									
A. Urine analysis									
1. Specific gravity	1	1					1		
2. Osmolarity	1	1					1		
3. pH	1	1							
4. Proteins	1	1							

TABLE 22. PHYSIOLOGICAL FUNCTIONS AND MEASUREMENTS: A PRIORITY RATING (cont'd)

Function / Measurement	Environment Factors								
Class 1: Required Class 2: Desired Class 3: Non-Essential	Summary of Responses	Weightlessness	Dynamic Forces	Ionizing Radiation	Cabin Atmosphere	Contaminants	Thermal Environment	Circadian Rhythms	Psycho-Physiological Factors
5. Sugar	1	1							
6. Acetone	1	1							
7. Microscopic	1	1							
B. Electrolyte Balance									
1. Sodium	2	2							
2. Potassium	1	1							
3. Chloride	3								
4. Bicarbonate	3								
C. Mineral Corticosteroids	2	2							
D. Water Balance									
1. Intake - output	1	1					1		
2. Total body water	1	1					2		
3. Extra cellular fluid	2	2					2		
4. ADH	3	3							
E. Functional Morphology									
1. Roentgenographic KUB IVP	3								
2. Histologic	3								

TABLE 22. PHYSIOLOGICAL FUNCTIONS AND MEASUREMENTS:
A PRIORITY RATING (cont'd)

Function / Measurement	Environment Factors								
Class 1: Required Class 2: Desired Class 3: Non-Essential	Summary of Responses	Weightlessness	Dynamic Forces	Ionizing Radiation	Cabin Atmosphere	Contaminants	Thermal Environment	Circadian Rhythms	Psycho-Physiological Factors
III Excretion									
A. Functional									
1. Intake and output	1	1				2	1	2	2
2. Clearance rates	3								
Inulin									
Diodrast									
PAH									
3. NPN	1					2	1		
B. Storage									
1. Bladder pressure	3								
2. Residual volume	3								
Hematological Response									
I Formation									
A. Hematology									
1. WBC - Differential count	1			1	1	1	2	2	
2. RBC count	3								
3. Hemoglobin	1				1	1	2	2	
4. Hematocrit	1				1	1	2	2	
5. Reticulocyte count	1				1	1			
6. Blood cell indices	3								
7. Platelet count	3								

TABLE 22 . PHYSIOLOGICAL FUNCTIONS AND MEASUREMENTS: A PRIORITY RATING (cont'd)

Function / Measurement	Environment Factors								
Class 1: Required Class 2: Desired Class 3: Non-Essential	Summary of Responses	Weightlessness	Dynamic Forces	Ionizing Radiation	Cabin Atmosphere	Contaminants	Thermal Environment	Circadian Rhythms	Psycho-Physiological Factors
B. Biopsy									
1. Bone marrow	3								
II Activity									
A. Clotting - Hemostasis									
1. Clotting time	3								
2. Bleeding time	2			2					
3. Platelet count	3								
4. Rumpel-Leede test	3								
5. Prothrombin time	3								
B. Sedimentation velocity	3								
C. Blood Pigments	1				1	1			
III Destruction									
A. RBC lifetime	3								
B. Serum bilirubin	1				1	1			
C. Fecal urobilinogen	3								
Immunologic Response									
I Tissue Antibodies	3								
II Circulatory Antibodies Plasma proteins gamma globulins	3								

TABLE 22. PHYSIOLOGICAL FUNCTIONS AND MEASUREMENTS: A PRIORITY RATING (cont'd)

Function / Measurement	Environment Factors								
Class 1: Required Class 2: Desired Class 3: Non-Essential	Summary of Responses	Weightlessness	Dynamic Forces	Ionizing Radiation	Cabin Atmosphere	Contaminants	Thermal Environment	Circadian Rhythms	Psycho-Physiological Factors
Provocative Tests to Circulation and Respiration									
Respiration									
I Exercise									
A. Isotonic contractions	1	1							
B. Isometric contractions	1	1							
C. Ergometer	1	1							
II Respiratory Maneuvers									
A. Flack Test	1	1							
B. Hyperventilation	2	2							
C. Maximum breath holding	2	2							
III Centrifugation									
A. Continuous	1	1							
B. Periodic	1	1							
IV Limb Tourniquets	2	2							
V Drugs	2	2							
VI Cold Pressor Test	2	2							

C. SELECTED BIOMEDICAL MEASUREMENT METHODS

The required and desired biomedical measurement methods were evaluated on the basis of the following criteria:

1) Medical Significance: Their utility as experimental measurements of the effect of the space environment on physiological functions and their utility as safety monitors of critical physiological functions.

2) Medical Usage and Accumulated Information: Measurement methods that have had widespread usage in both clinical and experimental medicine, and for which a large body of experience and information have accumulated to enable a proper interpretation of the mechanisms of observed changes.

3) Simplicity of Required Instrumentation: Methods that involve small, lightweight, low power consuming, reliable, and accurate instrumentation that is developed and available as flight-qualified hardware or is readily modifiable into such.

4) Adaptable to Use in a Weightless Environment: Methods that are operable in a weightless environment or can be readily modified through the use of special procedures as capillary tubes, pressurized collection, delivery systems, and small centrifuges.

5) Minimum Medical and Physical Hazard: Methods that avoid venipuncture, arterial puncture, indwelling catheterization and also minimize toxic, radioactive, and fire hazards.

6) Minimum Time and Crew Training Requirements: Methods that do not require excessive set up and run time and can be carried out by personnel at a technician level of competence.

The following measurements are those obtained by instrumentation methods independent of a medical history and physical examination.

D. REQUIRED OR CLASS 1 MEASUREMENTS

1. Psychophysiological

None of the psychophysiological measurements were of a required or Class 1 nature.

2. Circulation

a. Electrocardiogram

Information regarding the electrical activity of the heart is imperative for any space mission. For purposes of mission safety monitoring, rate and rhythm (R-R interval) are required, and provision should be made for onboard display. For purposes of experimental data, the complete wave form in the frequency range 0.2 cps - 100 cps is required. This is to enable data reduction to be carried out on the raw signal by ground-based computers so that new indices of predictive value can be searched for. If such indices exist in the electrocardiogram, special interval and amplitude computers can be developed and microcircuitized for future flight operational safety monitoring. Signal characteristics are: amplitude range, 0.75 to 5 millivolts, frequency content, 0.1 to 100 cps, source impedance, 300 ohms to 50 kilohms.

The recommended electrocardiogram signal conditioning amplifier is the flight-qualified unit developed for the NASA Gemini project. Specifications of this signal conditioner are as follows:

Input Impedance:	44 megohms terminals to ground
Common mode rejection:	100 db
Output Amplitude:	0-20 millivolts
Frequency Response:	0.2 to 100 cps ± 3 db
Voltages:	+ 10v, -10v ±1% dc
Currents:	Less than 5 ma per supply
Power:	0.1 watts
Weight:	0.13 lbs
Dimensions:	1.5" x 2" x .375", V = 1.11 in^3
Construction:	Welded

Standard balanced input PCM telemetry

The signal conditioners could be fabricated as semi-conductor microcircuits with a 50% savings in weight and volume.

The recommended lead configuration for safety monitoring purposes is a one-lead transthoracic placement of the electrodes in the mid axillary line at the level of the 7th or 8th rib. The electrodes can be shared by the impedance pneumograph. When gathering data for experimental purposes, the

three standard limb leads are recommended. A manual switching network with a capacity for obtaining the full 12 clinical leads is needed. Although not recommended, a simultaneous three-lead ECG, to obtain a vectorcardiogram, is a possible option.

b. Blood Pressure

Arterial blood pressure determinations are required for mission safety and experimental data gathering. Heart rate and blood pressure will provide a monitoring index of cardiac work output under conditions of weightlessness. They will be obtained with other cardiovascular measurements, such as regional blood flow, pulse wave velocity, pulse contour, and phonovibrocardiography as part of the experimental program. These measurements will provide information regarding the functional level to which the cardiovascular system has adapted to and the resilience or response capacity of the system to various provocative tests as a function of the duration of exposure to weightlessness and various conditioning regimens.

A continuous indirect measurement of blood pressure is desirable. However, at present, such a method does not exist. Some methods that show promise of future use are discussed below. Of available techniques, an electronic modification of the standard occluding cuff sphygmomanometer is the most satisfactory.

Provision should be made for onboard display of systolic and diastolic blood pressure. Signal characteristics of blood pressure obtained by indirect methods are: systolic pressure range: 0 to 300 mm Hg, rate of change; 0 to 6 mm Hg/sec and Korotkow sound frequency range; 30 to 150 cps.

(1) Recommended Method

The selected method of measuring blood pressure is the aneroid sphygmomanometer/Korotkow sound signal conditioning amplifier, developed for the NASA Gemini Project. This is a flight-qualified unit with the following specifications for the signal conditioner: weight, 1.5 ounces; dimensions, 1.5" x 2" x 3.75"; power, .150 watts; frequency response, 0-20 cps;

output, 0-20 millivolts. The weight of the cuff, Korotkow sound microphone, and manual pressure actuator is approximately 16 ounces. In the existing configuration, the subject or the observer must manually pump up the cuff. The pressure bleed-off time is 20-30 seconds. Repetitive readings can be made as frequently as every minute. It would be desirable to have an interchangeable semiautomatic cuff actuation system, with remote cuff control located at the biomedical/human factors monitoring console. This would enable repeated blood pressure determinations to be made on subjects being centrifuged, exercising, or occupied in biomedical measurements, or mission tasks that would prevent or limit their ability to manually actuate the cuff. The direct measurement of blood pressure with indwelling catheters is to be avoided because of the medical hazard involved. It is recognized that by the operational time period of the projected space stations, suitable indirect continuous measurements of blood pressure may be available. However, such methods should satisfy the following criteria: systolic and diastolic blood pressure within the accuracies obtainable by the occluding cuff which are in error when compared to direct measurement; relatively free of motion artifact and signal "noise"; independent of a requirement for precise positioning of the transducer that would be readily displaced by subject movement; stable baseline; unencumbering to the subject.

(2) Alternate Methods

As indicated, the use of indwelling catheter pressure transducers on humans in space is not recommended. However, they are the recommended method for indicated animal cardiovascular studies. The model SF1 transducer produced by Statham Transducers, Inc. is most commonly used. It is available as nonqualified flight hardware, and would be used with a general purpose signal conditioning dc amplifier. Specifications of the transducer are as follows:

Range:	-30 to +300 mm Hg
Non-linearity:	2% of full scale, max.
Frequency response:	DC to 1000 cps
Power:	7.5 volts DC, 0.1 watts
Weight:	one ounce
Dimensions:	0.09 inch diameter by 0.6 inch

Tonometry, the measurement of arterial tone or extensibility, has been applied to the measurement of arterial blood pressure. Two approaches were investigated by G. L. Pressman[93] of the Stanford Research Institute under NASA contract. The first technique, an indirect measure of blood pressure based on the differential transducing of arterial deflection, is extremely difficult to calibrate and is sensitive to physiological changes of skin and tissue around the artery. In the second technique, arterial deflection is restrained by the transducer and the restraining force measured. This technique also suffers the limitations of difficult calibration and the necessity of precise positioning of the arterial transducer rider. These methods are not adequately developed for consideration.

Mechanical digital plethysmographs consisting of a digital cuff and distal pulse transducer are available. However, clinical experience has indicated them to be unsatisfactory. A photoconductive pressure transducer was developed by Corbin Farnsworth[93] under NASA contract. It is an extension of the technique first developed by E. H. Wood[95]. The transducer mounts on the pinna of the ear. It consists of a pressure cuff to occlude blood flow in the capillary bed of the ear pinna and a photoelectric pulse transducer. Further development is required before this method can be considered. A general limitation exists on the interpretation of blood pressure measured on peripheral structures as digits and ears. These areas are very sensitive to local conditions, as temperature changes and the peripheral blood pressure will not correlate with central blood pressure when changes in total blood volume occur.

Opthalmic artery occlusion was investigated and considered unsatisfactory by virtue of the unreliable measurements obtainable and the visually encumbering apparatus involved.

The velocity of propagation of the arterial pressure pulse down the arterial tree is termed pulse wave velocity. Experimental studies conducted at the Air Force School of Aerospace Medicine and some theoretical treatments have indicated[96] that pulse wave velocity is proportional to mean intra-arterial blood pressure. However, there are physiological states where the relationship

does not exist. This is especially the case when pulse wave velocity is measured on the distal segment of the arterial tree where the muscularis is prominent in determining the extensibility of the arterial wall. More investigative work is required before a satisfactory mathematical relationship between pulse wave velocity and blood pressure and the conditions under which it applies can be established. Methods of measurement have consisted of determining the transit time of the pressure pulse between two suitable pulse transducers. In the Salisbury[97] technique, the propagation in an artery of an externally-applied square wave pulse of short duration is measured. However, this technique requires a critical location of the pulse injector, which is difficult to retain under dynamic conditions. The value of pulse wave velocity as a continuous index of cardiovascular status is recognized and discussed under the Class 2 measurements. However, its value as a measurement of blood pressure has not been established.

The use of implant blood pressure transducers is indicated for animal studies. An implantable, non-occlusive, non-invasive cuff blood pressure transducer has been developed by the Martin Company[98]. Both hardware and telemetry transmission of the signal are possible. Spacelabs, Inc. has developed an aortic insert pressure transducer with both hard wire and telemetry transmission capability. Statham Transducers, Inc. is currently developing an implantable blood pressure transducer. Weights of these transducers are less than one ounce, and the associated telemetry equipment less than two ounces. At present, not enough experience has accumulated on the use of these transducers. A recommended area of development is a semiconductor microcircuitized implantable blood pressure transducer and telemetry link which would meet the following criteria: non-occlusive, non-invasive, unaffected by body fluids, readily calibrated, minimum drift, operating life in excess of one year.

c. Regional or Surface Blood Flow

It is anticipated that one of the effects of weightlessness will be a decrease in vascular smooth muscle tone. This, in turn, will affect the vasomotor response of the arteries and arterioles. Criteria for measuring the

degree of vasodilatation or vasoconstriction (vasomotor activity) include (1) changes in volume of the structure or organ in question (plethysmography), (2) the blood flow through the efferent veins, and (3) the blood flow through the afferent arteries. To provide reliable information, plethysmography should be of a large accessible structure and not digital or ear plethysmography. This indicates limb plethysmography. Existing methods of obtaining limb plethysmography consist of mechanical transducers of volumetric changes, reflectance photoelectric plethysmography, electrical impedance plethysmography. The first two are affected to a large extent by motion artifact. The third method has some promise and is recommended as an alternate method. No adequate measurement of venous blood flow exists that could be incorporated into a space station experiment. Under controlled conditions of ambient temperature, skin temperature is an indicator of cutaneous blood flow.

The heat transfer equation[99] is illustrated graphically in Figure 8. Each individual curve represents the relation between skin surface temperature and skin blood flow required to keep core temperature constant, assuming no evaporative heat loss and heat transfer at the rate of 45 K cal/m^2/hr, constant thermal conductivity of the epithelium of 9 kg cal/m^2/hr/°C/cm, and its effective thickness as 1 mm. However, only changes in regional blood flow are desired and the quantitized data presented in the figure are not required.

The recommended method is as follows: cutaneous surface temperatures are to be continuously recorded at three loci: dorsum of hand, lateral surface of forearm, and deltoid surface of the shoulder. Ambient temperature should be controlled to vary less than 0.1° C/min and a monitoring record of it obtained. A possible transducer is the NASA Gemini thermistor bridge/amplifier, which is discussed later in this section under body core temperature. An alternate temperature transducer is the infrared thermometer operated in conjunction with the general purpose dc amplifier. The three channels of skin temperature are to be measured as an indicator of vasomotor response to the provocative tests as a function of duration of exposure to weightlessness and the various conditioning regimens as described under the experimental program.

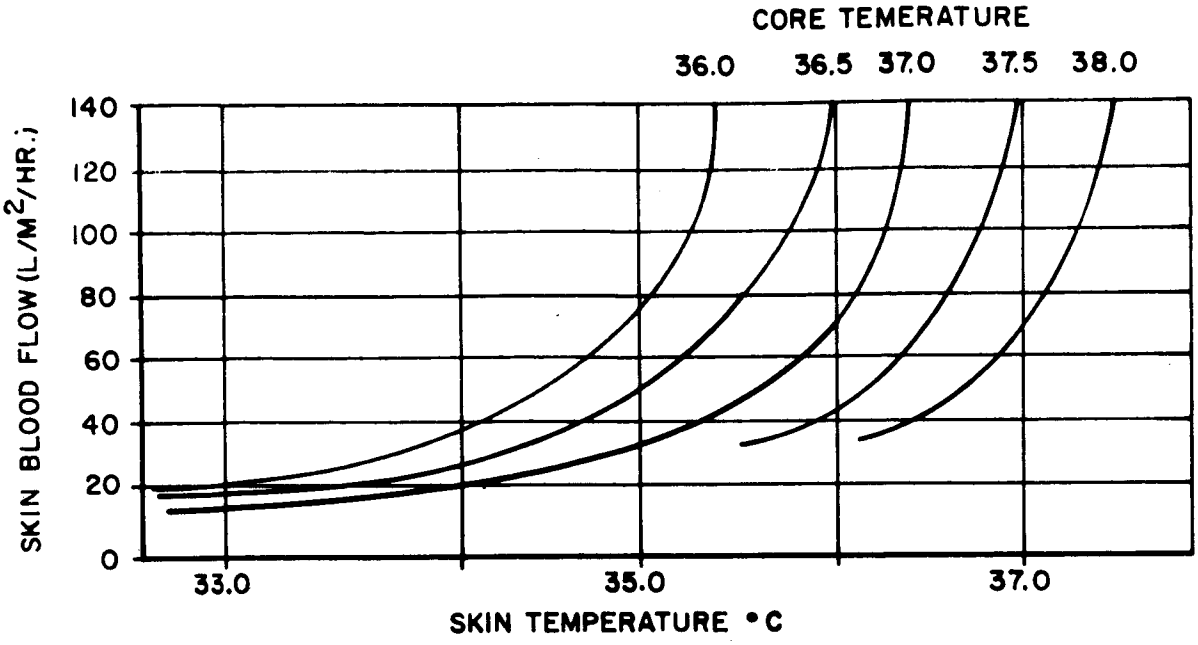

Figure 8. Heat Transfer Equation

3. Respiration

a. Respiration Rate

Respiration rate is to be obtained both as a mission safety and experimental measurement. Average resting rate is 12-20 breaths/minute and rates up to 50 breaths/minute can be anticipated. Onboard display is required.

(1) Recommended Method

The recommended method of obtaining respiration rate is the flight qualified impedance pneumograph signal conditioning amplifier developed for the NASA Gemini Project. The signal characteristics are as follows:

Amplitude range:	1 to 10% of source impedance @∠ -28° to ∠-45°
Frequency content:	0 to 6 cps
Source impedance:	250 to 350 ohms

The specifications of the signal conditioner are as follows:

Amplitude:	0-20 millivolts
Linearity:	2 decade logarithmic, balanced
Frequency Response:	0 to 12 cps ± 3 db
Voltages:	+10v, -10v, ±1% dc
Currents:	-6 ma, +5 ma
Power:	0.11 watts
Weight:	0.13 lbs
Dimensions:	1.5" x 2" x .375", V = 1.11 in^3
Construction:	Solid state welded

Standard balanced input PCM telemetry

The signal conditioner could be fabricated as a semi-conductor microcircuit with a 50% reduction in weight and volume. The recommended lead configuration is bilaterally in the mid-axillary line at the level of the 7th or 8th rib. The electrodes can be shared with the electrocardiogram signal conditioner.

(2) Alternate Methods

Chestbands incorporating strain gages and nasal bead thermistors are not recommended. Spirometers are obviously restrictive of subject movement. Pneumotachometers are not recommended for respiratory rate, but are indicated for volumetric measurements.

b. Tidal Volume (Respiration Depth)

A qualitative estimate of the depth of respiration is desired in conjunction with respiration rate. Quantitative measurements of tidal volume will be obtained in conjunction with oxygen uptake studies utilizing a pneumotachometer with an integrated output. Normal tidal volume is approximately 600 ml and a range of 150 ml to over 2,000 ml may be observed.

(1) Recommended Method

The recommended method for measurement of tidal volume is by using the NASA Gemini impedance pneumograph.

(2) Alternate Methods

A pneumotachometer with integrated output is recommended below for vital capacity and oxygen consumption measurements and will be available for quantitative determinations of tidal volume. Wedge, canister and servo spirometers are other methods of measuring tidal volume.

c. Vital Capacity

Vital capacity is a valuable screening test for lung compliance and airway resistance. It is one of the most precise measurements of physiological function, with an accuracy of 3% attainable. In addition, the measurement will be used as a periodic monitor of possible atelectasis formation, which would cause a fall in vital capacity. Normal vital capacity ranges for men are 4 to 5.5 liters. As is true for all of the selected measurements, numerous pre-flight measurements using the flight measurement instrumentation should be made to facilitate evaluation of inflight data. Only flight data beyond two standard deviations of the preflight data will be considered significant.

(1) Recommended Method

The recommended method of measuring vital capacity is a pneumotachometer with an integrated output. The signal characteristics of respiratory flow rate are: Frequency Range, 0 to 40 cps; Normal Flow Range, 250 to 500 ml/sec; Maximum Flow, 8L/sec. In addition, the pneumotachometer is recommended as a general respiratory monitor. It would be capable of measuring respiratory rate, all of the standard respiratory volumes including tidal volume and vital capacity, flow-volume loops, and, with appropriate sensors, O_2 consumption and CO_2 production. Pneumotachometers are available which operate on the principle of rotating vanes, pressure differentials, bead thermistors, and boundary layer heating. Specifications of an obstructionless mass flow meter utilizing the latter principle are presented as representative of the desired pneumotachometer:

Frequency Response:	0 to 2 cps
Time Constant:	0.1 sec
Voltage:	22 to 29 VDC
Power:	2 watts
Weight:	8 ounces for sensor, 16 ounces for electronics package
Dimensions:	8-1/2" x 1-3/4" O.D. 7/8" I.D. sensor 3" x 5" x 1-1/2" electronics package

(2) Alternate Methods

Spirometers are in most general use for the measurement of respiratory volumes. The wedge spirometer is the most satisfactory because of its simplicity of operation, accuracy and independance of gravity. However, it does not equal the pneumotachometer in flexibility of usage as a metabolic monitor and respiratory gas analysis instrument.

4. Thermoregulation

Body core temperature is another required measurement for purposes of assuring mission safety and experimental data gathering. Oral temperatures are recommended, and can be obtained at frequent enough intervals to indicate the response of core temperature to internal and external heat loads. Core temperatures are essentially dc data. Expected range of oral temperatures is 95° F to 105° F. Onboard display is required.

The recommended instrumentation is the flight-qualified thermistor bridge/amplifier developed for the NASA Gemini project. Specifications of this signal conditioner are:

Output:	Amplitude 0-5 volts, linearity ± 0.3% 95°F to 105°F, accuracy 1% full scale
Dynamics:	Frequency response flat to 1 cps
Voltage:	+10v, -10v ±1% dc
Current:	4 ma/supply
Power:	0.80 watts
Weight:	0.13 lbs
Dimensions:	1.5" x 2" x .375"

High level PCM telemetry

As discussed earlier, these signal conditioners would also be used for measuring skin temperature. They can be fabricated as semiconductor microcircuits with a 50% reduction in weight and volume.

Alternate loci for measuring core temperature are: a fitted external auditory canal probe for tympanic membrane temperatures, rectal probes, axillary probes, and inguinal probes. They are not felt to be required for experimental purposes, but tympanic membrane temperature is an attractive method for continuously monitoring body temperature on a subject in an extra vehicular suit.

5. Neuromuscular Activity

a. Muscle Strength

A quantitative measure of muscle strength is required to assess the adequacy of conditioning exercises designed to counteract the effects of weightlessness. This will aid in the development of optimum exercise regimens.

(1) Recommended Method

A load cell muscle dynamometer is recommended as the method of measuring muscle strength. An artist's schematic of a possible configuration and its use is indicated in Figure 9. Envelope dimensions are 3" x 4" x 3". Weight is estimated at one pound, and power requirements 0.1 watts. It would have an electrical output for both onboard display and recording.

(2) Alternate Methods

A qualitative indication of muscle strength is obtained during a standard neurological examination. This, however, is not adequate for comparative purposes. Other methods that might be considered consist of torsion bars with skin gage transducers[100].

b. Muscle Size and Mass

In a weightless environment, and with inadequate muscle conditioning exercises, muscle size and mass are expected to decrease. This will expecially be true for the antigravity muscles. To properly evaluate the decrease, a measurement of muscle size and mass is required. A decreased muscle mass

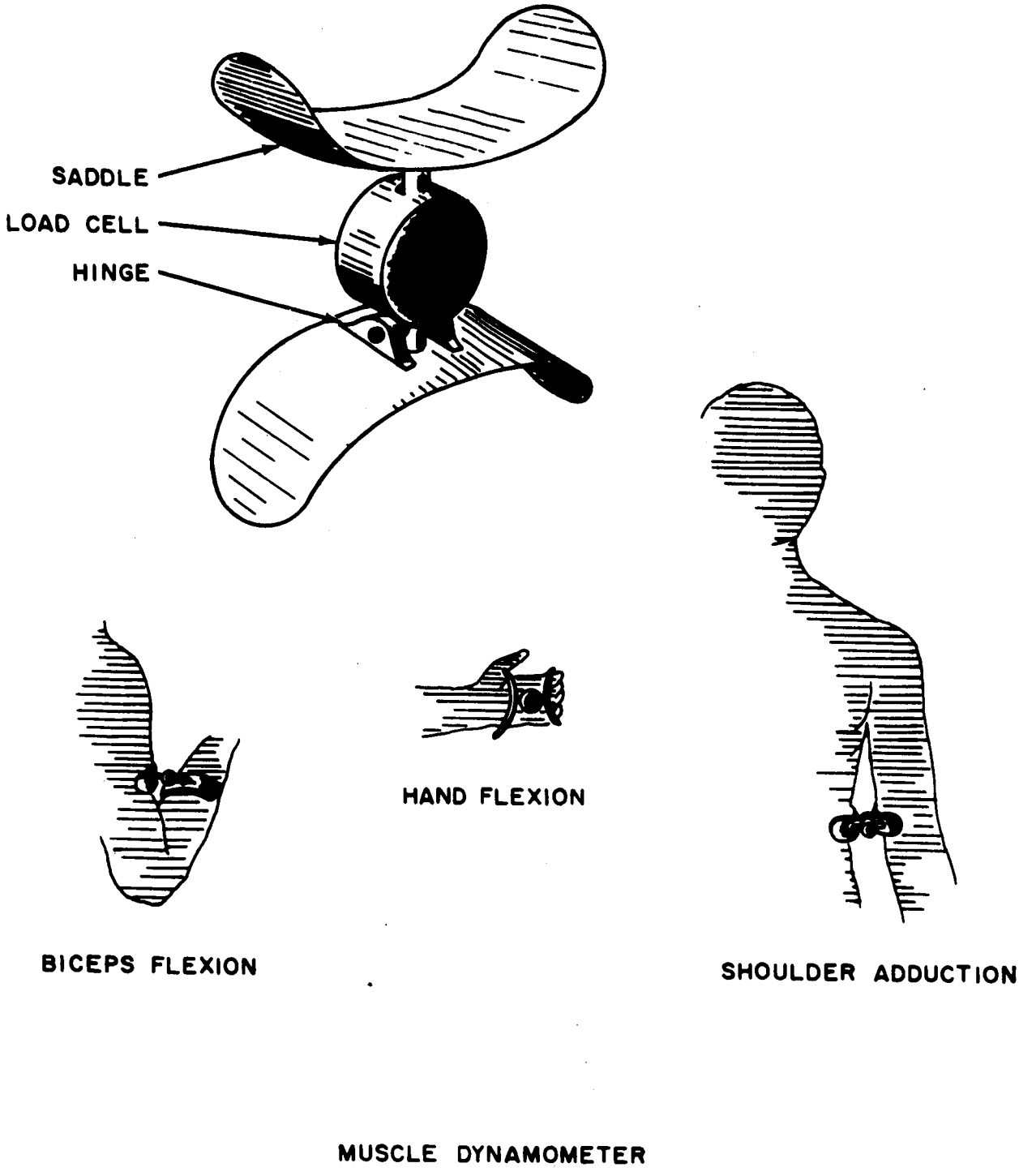

Figure 9. Muscle Dynamometer

should result in a decrease in tissue oxygen requirements, which would be manifested as a lower oxygen consumption and lower cardiac output. Although the presumed decrease in muscle size and mass may well be prevented by suitable exercise and, if it should occur, the effects on man's performance may be minimal and the effects on oxygen consumption and cardiac output largely academic; nevertheless, these relationships should be investigated.

Muscle size should be evaluated by gross anatomical measurements with a tape measure. The evaluation should be made serially at the following sites: calf and thigh circumferences, forearm and arm circumferences, chest circumference, neck circumference. The sites should be marked to eliminate errors of positioning the tape measure. Admittedly, these are only qualitative measures of muscle size, but, nevertheless, are recommended. Other measurements related to muscle size, mass, and tone, such as the electromyogram and signal processed EMG-muscle recruitment rate are discussed in the section on Desirable Class 2 Measurements.

Muscle mass can be evaluated by two methods: urinary creatine/creatinine ratio, and whole body K^{40} counting. Normally, creatine does not appear in the urine of healthy males on a balanced diet [101]. Creatinuria will occur when plasma concentrations exceed 0.6 mg per 100 ml, secondary to a decrease in muscle mass brought on by wasting, starvation, and atrophy. Thus, creatinuria is inversely related to muscle mass. Conversely, urinary creatinine, which has an almost constant level of elimination, will decrease. This is because creatine is metabolically degraded to creatinine in muscle tissue. The urinary creatine/creatinine ratio is, therefore, a more precise indication of the status of muscle mass.

It is not necessary to measure creatine/creatinine ratios on board the space station. However, frequent urinary samples should be obtained and freeze stored for analysis on the ground. The sampling intervals are a function of mission duration and are discussed in the section on the experimental program. Inflight analysis is required if (1) preservation of samples is

unfeasible, or (2) the period before return of sample exceeds one month. The method recommended for inflight analysis is spectrocolorimetric. The required equipment is part of the bioanalytical facility described in Section VI.

Whole body counting of the normally present radioisotope K^{40} is a measure of potassium space which is predominantly skeletal muscle. Thus, a decrease in K^{40} activity is proportional to a decrease in lean body mass. Whole body counting would require a four inch sodium iodide scintillation crystal, a single channel pulse height analyzer, a dc amplifier, and sufficient shielding to improve the signal to noise ratio. It was felt that this measurement method was not required in space, but pre- and post-flight whole body counts are recommended.

c. Oxygen Consumption

The interrelationship between muscle mass, tissue, oxygen requirements, and cardiac output has been discussed in the preceding section. Oxygen consumption could as well have been indicated under the functions of respiration, circulation, and metabolism. No interference in the process of oxygen uptake either at the alveolar or cellular respiratory level during weightlessness is anticipated. However, oxygen consumption should decrease in weightlessness secondary to a relative (activity decrement) and absolute (mass decrement) decrease in tissue requirements[102].

The measurement of oxygen consumption can be made with the pneumotachometer (flowmeter) and suitable oxygen sensors[103]. A measurement of carbon dioxide should be simultaneously obtained.

Current oxygen sensors consist of mass spectrometers, gas chromotography, paramagnetic analyzers, electrochemical polarographic sensors, galvanic cells, and ultraviolet sensors [103 to 106]. Only the mass spectrometer with rapid capillary sampling of the respiratory gases provides the response time necessary for a breath by breath analysis.

(1) Recommended Method

A mass spectrometer would provide a powerful investigative tool for the study of respiratory physiology. Oxygen uptake, carbon dioxide production, end tidal CO_2, total body water using D_2O, to name a few, would be measured by the mass spectrometer. Currently, mass spectrometers are being developed by three companies for respiratory gas analysis in space. Bendix Corporation and AiResearch Corporation are developing time of flight mass spectrometers and Consolidated Systems Corporation is developing a double focusing mass spectrometer for the NASA PIAPACS system. Specifications of the latter system are presented as representative of the present state-of-the-art in mass spectrometers.

Input:

Channels: Twelve

m/q	Ion	Gas Monitored
2	H_2^+	Hydrogen
12	C^+	CO (separation from N_2)
15	CH_3^+	Methane
17	NH_3^+	Ammonia
18	H_2O^+	Water vapor
28	N_2^+	Nitrogen
29	HCO^+	Combined aldehydes and ketones
32	O_2^+	Oxygen
34	H_2S^+	Hydrogen sulfide
42	N_3^+	Nitrogen radical
44	CO_2^+	Carbon dioxide
45	$COOH^+$	Combined acids

Output:

Amplitude:	0-5 volts
Impedance:	Less than 100 ohms
Linearity:	Approximately ±2%

Dynamics:

Response Time:	0.1 sec

Power Requirements:

Voltages:	28v dc ±2v	
Current:	1.3 amps analyzer	1.8 amps analyzer + sample vacuum system
Power:	37 watts analyzer	50 watts analyzer + sample vacuum system

Mechanical:

Weight:	18 lbs analyzer, 40 lbs analyzer + sample vacuum system
Dimensions:	10 x 10 x 10 analyzer, 10 x 10 x 22 analyzer + sample vacuum system

(2) Alternate Methods

Consideration should be given to the development of advanced O_2 and CO_2 sensors with an adequate dynamic response to monitor breath by breath respiratory gases. If a wedge spirometer is on board the space station, it would provide a more accurate measure of oxygen consumption.

6. Skeletal Support

a. Calcium

Calcuria is anticipated, and the amount is to be measured both as a means of understanding this response of the skeletal system to weightlessness and as a means of designing optimum conditioning regimens. Parathormone regulation of serum calcium should not be affected, and no requirement for on-board monitoring of it is indicated. When the 24-hour urinary output of calcium exceeds 200 mg, the possibility of urinary calculi arises[107].

The necessity for quantitative measures of urinary calcium onboard the space station is not indicated unless the following conditions apply: (1) sample aliquots of 24-hour urines are not available for post-flight analysis, (2) time before return of samples to ground exceeds one month, (3) onboard quantitative screening methods are not available, or (4) onboard qualitative measurements indicate a requirement for close quantitative monitoring of calcium output.

(1) Recommended Method

Onboard qualitative screening of urinary calcium can be accomplished with a modification of the Sulkowitch method. A suggested approach is to pressure titrate the urine into microtestubes containing Sulkowitch reagent. Approximately 0.2 ml each of urine and reagent should be adequate. The tube will be mixed and centrifuged to bring down the white precipitate of calcium oxalate which can be graded as 1, 2, 3, or 4, corresponding to precalibrated urinary calcium levels. The handling of the liquids can be done with pressurized microtitrators such as those manufactured by Beckman Instruments, or with nonwettable polyethylene syringes. An additional screening of calcuria will be a microscopic examination of the urine for calcium oxalate crystals (acid urine) and calcium phosphate crystals (alkaline urine). The recommended onboard quantitative measurement method is an ultramicroanalytical adaptation of the EDTA technique. This will be done with the bioanalytical system described in Section VI.

(2) Alternate Method

A desirable method for screening urinary calcium would be electrochemical. A calcium electrode would simplify the problem of fluid handling. However, such an electrode is not available for bivalent cations. Other methods of obtaining quantitative measures of calcium are flame photometry and x-ray emission spectroscopy. The latter has extreme sensitivity and is used for blood trace element analysis. However, it cannot be recommended on the

basis of existing technology, but should be considered for possible further development. Calcium determinations by flamephotometry are generally in error due to interference from the spectral emission lines of potassium and sodium. Also, the presence of a free flame in the weightless space station would impose additional venting requirements and safety precautions.

b. Nitrogen

The decalcification of the skeletal system may be accompanied by a breakdown in the supporting protein (collagen) matrix. This will be manifested as an increase in urinary non-protein nitrogen. This important aspect of protein metabolism should be studied. The requirements for onboard analysis are similar to those for calcium. When indicated, onboard analysis of non-protein nitrogen can be done with a bioanalytical system.

7. Metabolism

a. Blood Sugar

Regulation of blood sugar is not expected to be affected by the space environment. However, three considerations exist for its measurement. A change in the closely regulated blood sugar level would indicate a fundamental interference with metabolic regulatory functions. This would then require further investigation. The space environment might have an affect on the periodicity of blood sugar regulation. This is of interest in the general evaluation of periodicity. Blood sugar levels may increase secondary to muscle atrophy.

Onboard quantitative measurements of blood sugar are not required except under the conditions described in paragraph 6a concerning calcium. Two hours post prandial samples of blood should be obtained for post flight analysis. Fasting blood sugar and glucose tolerance determinations are not indicated.

Onboard qualitative screening is considered adequate. In addition urinary glucose will be screened with reagent test strips.

Two hour post prandial blood sugars are to be qualitatively measured utilizing glucose oxidose reagent test strips ("TesTapes") manufactured by Eli Lilly. If onboard quantitative measurements are indicated, they are to be done on the bioanalytical system.

b. Body Mass

A measurement of body mass is required for both mission safety and experimentation. It will provide an integrated index of body functioning useful for general monitoring purposes. In addition, it will provide information on body wasting, especially muscle loss, fluid balance, and general metabolic activity. Special techniques for determining body mass will have to be developed.

One suggested method is to couple the subject to a body conforming platform suspended between supports by springs. The platform is displaced and its period of oscillation is proportional to the square root of the total mass.

$$m = \frac{T^2}{4\pi^2} K$$

m = total mass subject and platform

T = period of oscillation

K = spring constant

The platform can also be used for obtaining ballistocardiograms, a desired Class 2 measurement.

Measurement of mass can also be done by placing the subject on a centrifuge and measuring the centrifugal force at his center of mass with a dynamometer.

$$m = \frac{F}{(2\pi f)^2 r}$$

F = dynamometer force reading

f = cycles/sec of centrifuge

r = effective radius arm

m = mass of subject

Measurement of mass can also be done by attaching an extended negator spring (constant force) to the subject. The body of the spring is rigidly attached to the bulkhead - the extended end also rigidly held is released, accelerating the man. The output of an accelerometer built into the terminal end of the spring is used to solve for the subject mass:

$$m = \frac{F}{a}$$

F = negator spring force
a = accelerometer output
m = mass of subject and instrumentation

8. Fluid Electrolyte Balance

a. Urine Analysis

A standard urine analysis is required onboard for purposes of mission safety on all missions exceeding one month in duration. Qualitative screening procedures involving reagent test tapes are adequate for most measurements. In addition, 10 ml samples of pooled 24 hour urine should be freeze-stored for post flight analysis.

(1) Specific Gravity - Osmolarity

It would be desirable to have both specific gravity and osmolarity measurements. However, a possible method for determining specific gravity in a weightless environment would require centrifugation and a transducer of density gradients.

Osmolarity is a more significant medical measurement of fluid electrolyte balance. Osmolarity can be obtained by measurement of the freezing point depression - one osmolal concentration has a freezing point depression of 1.86°C. Estimates of a self-contained osmometer are: weight, 10 lbs;

volume, 640 cu in; and power, 20 watts. However, access to an onboard heat sink would reduce these requirements to: weight, 2 lbs; volume 20 cu in; and power, 16 watts.

(2) Urinary Protein, Glucose, and pH

Urinary protein, glucose, and pH can be determined with one reagent test strip such as "Combistix", produced by Ames Company. Either capillary tubes or small polyethylene syringes can be used to collect the urine and apply it to the test strip.

(3) Urinary Ketones

Urinary Ketones can be determined with a reagent test strip such as "Ketostix", produced by Ames Company

(4) Microscopic Analysis

The value of a good microscopic examination of urinary sediment is to be stressed. Particular attention should be directed at locating calcium oxalate crystals (acid urine) and calcium phosphate crystals (alkaline urine). The required equipment is part of the clinical laboratory described in Section VI.

b. Potassium

In consideration of the physiological importance of potassium and an expected increase in its excretion secondary to a decrease in body mass (muscle mass primarily), a measurement of serum and urinary potassium is required.

The recommended method for measuring urinary and serum potassium is use of a cationic responsive glass electrode as the transducer and use of a general purpose dc-amplifier as the signal conditioner. Recent investigations indicate these electrodes are as accurate and precise as a flame photometer. The electrodes can be constructed as microelectrodes and only a small volume of serum and urine analyzed.

c. Body Water

Information regarding fluid balance should include body water measurements. The state of hydration can be evaluated in a semi-quantitative manner from the following information: fluid intake and output, physical examination (skin turgor, etc.), body mass, and hematocrit. All of these measurements are required and will provide considerable information as to the status of hydration. However, in weightlessness, renal artery blood pressure may be expected to decrease by approximately 20-30 mm Hg, due to the ablation of the hydrostatic pressure head. In addition, an anticipated fall in cardiac output secondary to a decreased work load in weightlessness and diminished tissue oxygen requirements will cause a further decrease in renal blood pressure. What effect this will have on renal function and fluid and electrolyte balance must be studied. This is an indication for quantitative measurements of body water. The absence of adequate data concerning the above mentioned measurements, especially intake and output, also dictates quantitative measurements of body water.

(1) Recommended Method

The recommended method of measuring total body water is the use of deuterium oxide. This requires an onboard mass spectrometer for which specifications have been listed earlier in this section. It is further recommended that inflight ingestion of known amounts of heavy water and the sealed storage of urine samples for post-flight analysis be considered on early flights of Gemini and Apollo. This is indicated in the experimental program.

(2) Alternate Methods

A recently reported method[108] of alcohol dilution for measuring body water is a possible alternate quantitative method. The analysis of urine alcohol can be done with the bioanalytical system or a gas chromatograph. Another alternate method is antipyrine dilution. Urea and tritium oxide dilution are not recommended.

9. Hematological Response

a. Hematocrit

Measurement of hematocrit is required for the safety of missions greater than one month, and for experimental data. It will be of special value in studying blood volume and fluid balance as they relate to weightlessness.

The microhematocrit technique employing capillary tubes and a microcentrifuge is recommended.

b. Hemoglobin

Measurement of hemoglobin is required for the safety of missions greater than one month and for experimental data. Its value is similar to that of the hematocrit and can be substituted for it.

A hand-held hemoglobinometer of the Sahli-Haden type, or equivalent, is recommended. It is sufficiently accurate for monitoring purposes and should present no particular problem in liquid handling. Specifications are: weight, 8 ounces; volume, 30 cu in; power, self contained. If the spectrocolorimeter is available, this is the method of choice.

c. Leukocyte Count

A leukocyte count is required for the safety of missions greater than one month. In addition, its value as a biological radiation dosimeter is recognized. The measurement will be a microscopic count with a hemocytometer.

d. Differential Count

A standard clinical differential count of leukocytes and assessment of erythrocyte morphology, and platelets is required for mission safety and for experimental data. Special attention should be directed at the small lymphocyte count, which is the most radiosensitive of the formed blood elements. The technique will require a stained blood smear and a microscope.

e. Serum Bilirubin

A measurement of serum bilirubin is indicated for assessing the effects of contaminants and artificial atmospheres on erythrocyte destruction. No requirement exists for onboard measurement unless samples for post-flight are unfeasible, the period before return of samples to earth exceeds one month, or there is an indication in other measurements, observations, or ground determinates that frequent measurements be made.

The recommended method is the Galloy and Evelip technique utilizing the bioanalytical spectrophotometry system.

f. Abnormal Hemoglobin Pigments

The danger of toxic contamination will be an ever present one in the closed ecology of the space station. It is mandatory that the blood be periodically screened for the presence of methemoglobin, sulfhemoglobin, and carboxyhemoglobin. Qualitative tests are considered adequate for these monitoring purposes. In addition, post flight spectrophotometric analysis of blood samples obtained in flight is a requirement.

Identification and qualitative measurements of the abnormal hemoglobin pigments can be obtained with a small spectroscope and a commercially available pocket size carboxyhemoglobin unit. Quantitative measurements can be made with the bioanalytical system spectrocolorimeter. However, special optical filters of 5-mμ width would be required, as the unit is only capable of a 15-mμ spectral band pass.

E. DESIRED - CLASS 2 MEASUREMENTS

1. General

The Class 2 measurements are desired for their utility to increase more completely the investigation of problem areas indicated by the mission safety and Class 1 measurements.

Class 1 and Class 2 measurements are both supplementary and complimentary to these more critical measurements in each of the physiological

function areas. They also are desired as measurements of functions not felt to be severely affected by the space environment yet important enough to be evaluated as part of the general experimental program.

2. Psychophysiological

a. Electroencephalogram

The electroencephalogram is recommended primarily for its value as an alertness indicator, possible anoxia indicator, and other indices which may arise out of the current studies involving computer data reduction of the electroencephalogram. The primary signal characteristics are: amplitude range, 10 to 75 uV; frequency content, 2 to 100 cps; source impedance, 0.3 to 10 kilohms. The raw signal should be obtained and recorded for telemetry to the ground and computer reduction.

The recommended electroencephalogram signal conditioning amplifier is the flight-qualified unit developed for the NASA Gemini project. Specifications are:

Input Impedance:	5 megohms
Common mode rejection:	100 db
Output Amplitude:	0-20 millivolts
Frequency response:	0.5 to 100 cps ± 3 db
Voltage:	+10v, -10v ± 1% dc
Currents:	5 ma per supply
Power:	0.100 watts
Weight:	.13 lbs
Dimensions:	1.5 x 2 x .375 inches Volume 1.1 cu in.
Modifications:	Semiconductor microcircuits will reduce weight and volume by approximately 50%

3. Circulation

a. Cardiac Output

The human response section indicated a possible reduction in cardiac output due to reduced tissue oxygen requirements and the "unloading" of the heart from hydrostatic forces. For a clear definition of the response, measurements of cardiac output are indicated. However, existing direct and indicator dilution methods require cannulazation, which is to be avoided in space on humans.

(1) Recommended Method

The ballistocardiogram[109] is recommended as an indication of cardiac output that can be readily accomplished in space. It is recognized that the ballistocardiogram is a complex wave form produced by the forces of many circulatory events. The initial systolic acceleration of blood produces a recoil force corresponding to the I wave of the ballistocardiogram. The amplitude of this cycle has been considered proportional to cardiac output. The impact of blood in the aorta results in the J Wave. The amplitude of this cycle depends on elastic properties of the large vessels and the level of arterial pressure. The weightless environment should be ideal for ballistocardiographic measurements. The suggested technique[110] is to firmly strap the subject into a light body conforming free floating platform. Accelerometers to measure three translational axes, (x, y, z) and three rotational axes (θ_x, θ_y, θ_z) will be mounted at the subject's center of mass. Instrumentation requirements are six accelerometers and six dc amplifiers. The frequency range of the ballistocardiogram is 0-40 cps. Electrocardiograms and phonovibiocardiograms should be obtained simultaneously with the ballistocardiogram for the correlation of cardiac electrical and mechanical activity. Platform weight is estimated at 20 lbs, dimensions are 6-1/2' x 2-1/2' x 1".

(2) Alternate Methods

The only existing quantitative measurement of cardiac output is the direct Fick method. This is too hazardous to be done in a space station. The same reservation holds for the other methods of cardiac output measurement: dye dilution, (Evans Blue or T-1824), radioisotope dilution (RIHSA), thermal dilution and saline dilution. Models of the cardiovascular system have been developed that allow a computation of cardiac output from pulse wave velocity measurements [111]. They have not, however, been experimentally verified.

b. Venous Distension (Pressure)

One of the major effects of weightlessness on the circulation is expected to be on the venous side. A measurement of venous distension and/or pressure is desirable.

Indwelling venous catheters are not advocated for use in the space station environment, hence measurements of venous distension and pressure will, of necessity, be indirect.

An indication of peripheral venous distension will be obtained primarily by physical examination of the subject. A possible technique is to inflate a transparent cuff placed about the limb area in question as the dorsum of the hand and noting the pressure at which venous collapse occurs.

c. Total Blood Volume

Any changes in blood volume are expected to primarily be in effective or circulating blood volumes, secondary to an over-compartmentalization of blood in the venous side of the circulation. However, with a long time cardiovascular adaptation to the reduced work load, and reduced tissue oxygen requirements, total blood volume might be expected to decrease. Information such as hematocrit, body mass, pulse rate, blood pressure, and clinical appearance of the subject will be adequate in most cases to assess the blood volume. However, facilities must be available to measure total blood volume if a quantitative measurement is required.

Four standard methods of measuring blood volume are available: dye dilution with Evans Blue (T-1824), radioactive iodinated human serum albumin (RIHSA), radiophosphorus (P^{32}), and radioactive chromium (Cr^{51}) tagged red blood cells. The latter three require either Geiger counters or well scintillation counters and special isotopic handling procedures. The Evans Blue technique is a spectrocolorimetric method, and can done with existing on board equipment - the spectrocolorimeter of the bioanalytical system. For this reason, it is the recommended method.

d. Phonovibrocardiogram[109, 110, 112, 113, 114]

The clinical vibrocardiogram is thoracic wall vibration, with the pertinent information contained in the frequency range of 0.1 to 50 cps. The higher frequency components contribute only superficially to the basic information. Phonocardiogram causes thoracic wall vibrations in the range of 50 to 1000 cps,

with most information being contained in the spectral range 50 to 250 cps. The work of Agress[112] indicates that at 20 to 25 and 25 to 50 cps the records are dominated by the value sounds. At the lower frequencies, the influence of value sounds diminishes or nearly disappears. These infra-audible frequencies are produced by movement of other structures or elements of the heart and blood. Foulger[108] has proposed a relationship between low frequency waves and low tonicity of heart muscle. Rosa[113] found a close relationship between changes in intracardiac pressure and precardial vibrations. It is interesting to note that the Russians[102] have used both phonocardiograms and kinetocardiograms on their Vostok flights. They detected and integrated the phonocardiogram output signal to achieve a more economic use of available telemetry channels. The duration of mechanical systole was determined by means of phono- and kinetocardiograms. It was found to fall below preflight levels. They also found that the mechano-electrical coefficient K (ratio of mechanical systole to electrical systole) is relatively shorter during long-term action of weightlessness than at the onset of the orbital flight. They interpret these findings and other electrocardiographic and ballistocardiographic results as reflecting a fall in cardiac output and predominence of the parasympathetic nervous system.

The intensity of vibrations transmitted to the precordium as a result of cardiac activity diminishes approximately as the square of the frequency. The intensity of vibrations over the frequency range 2 cps to 1000 cps decreases by seven orders of magnitude.

It is recommended that a phonocardiogram-vibrocardiogram transducer-amplifier system be designed to have a non-linear frequency response characteristic. This approach will enable simultaneous transmission of phonocardiogram and vibrocardiogram data utilizing a single signal conditioning amplifier and transducer.

A phonovibrocardiogram signal conditioner is currently under consideration for the NASA Gemini Project. Although not developed, the specifications of this unit are presented as representative of the recommended method.

Frequency response:	0.01 to 500 cps
System transfer function:	24 db/octave roll off below 30 cps 6 db/octave rise 30 cps to 500 cps 18 db/octave roll off above 500 cps
Output voltage:	0 to 20 millivolts
Output Impedance:	1000 ohms
Voltage:	±10v dc ±1%
Current:	5 ma per supply
Power:	.100 watts
Weight:	25 ounces
Volume:	2.0 cu in.

The phonovibrocardiogram should be obtained simultaneously with the ECG, respiration rate, skin blood flow, and pulse wave velocity during the provocative tests. In addition, it should be obtained simultaneously with these measurements during ballistocardiographic acquisition.

e. Pulse Wave Velocity and Pulse Contour[96, 114]

One of the few measurements of circulatory activity that can be obtained continuously is the velocity of propagation of the pulse wave. It provides a means of investigating the dynamic response of the circulatory system. The measurement is indirect, so that with optimum sensor design, no subject discomfort or encumbrance occurs. The measurement time base is stable, presenting no problems of baseline shifts as in those monitoring methods which depend on detection of arterial volume. For these reasons and the rising interest of cardiovascular investigators in the measurement, it has been recommended.

The basic equation for pulse wave velocity was contributed by Moens in 1878, and is of the following form:

$$PWV = \sqrt{\frac{cE}{2\rho r}}$$

where:

PWV	=	pulse wave velocity
c	=	arterial wall thickness
ρ	=	blood density
r	=	internal arterial radius
E	=	arterial modulus of elasticity

The arterial modulus of elasticity E is in turn a function of:

Pressure: as the distending pressure increases, and the artery is stretched, E increases - this is especially true in the large arteries which are predominately viscoelastic (so-called passive response).

Vasomotor tone: arteries consisting of prominent muscularis when vasoconstricted will increase E or when vasodilated, E will decrease (active response).

Thus, depending upon what segment of the arterial system pulse wave velocity is computed for, information regarding primarily intra-arterial pressure or a combination of intra-arterial pressure and vasomotor tonus are available. The measurement would then appear to have value for three reasons in weightlessness studies:

1) The expected deterioration in vascular tone should be reflected in a relative decrease in PWV over standard paths of the peripheral arterial system.
2) Dynamic changes in intra-arterial pressure can be followed by measurements of PWV in the large arteries.
3) Vasomotor activity can be continuously monitored as a response to the various provocative tests.

It is recommended that pulse transit times be obtained by an interval counter computing time intervals between a variety of input signal pairs as:

S_1 = brachial pulse, "R" wave of ECG, first cycle of ballistocardiogram, vibrocardiogram

S_2 = radial pulse, external carotid pulse, femoral pulse

The arterial pulses will be obtained with a mechanical pulse transducer as a microphone capable of obtaining the pulse contour with frequency response of 0.1 to 60 cps. Estimates of the transducer and interval counter are: power, 0.1 watts; weight, 0.25 lbs; volume, 2.0 cu in.

4. Respiration

a. Expired Gas Analysis

The availability of a mass spectrometer as part of the measurement package will permit a comprehensive analysis of respiratory expired gases such as hydrogen, carbon monoxide, methane, ammonia, water vapor, nitrogen, aldehydes and ketones, oxygen, hydrogen sulfide, carbon dioxide, and combined acids. The availability of this information will permit a wide variety of respiratory and metabolic balance studies to be conducted.

The recommended method is the use of the pneumotachometer with integrated output and rapid capillary sampling mass spectrometer.

b. End Tidal Carbon Dioxide

Examination of the time-record of the CO_2 concentration in a single expired breath shows that the rate of rise of the end-tidal CO_2 concentration has a distinct non-zero value (in the emphysematous lung the end-tidal CO_2 has a markedly high slope).

To examine the theoretical significance of the non-zero slope in the end-tidal CO_2 tracing Bolie[115] developed a mathematical model considering a single alveolus adjacent to its corresponding capillary network. The equation of CO_2 continuity for such an alveolus during expiration is:

$$\frac{d}{dt}(c_i V_i) = \dot{Q}_i + e_i \frac{dV_i}{dt}$$

The very small effect of slight alveolar CO_2 pressure changes on the alveolar-capillary-blood CO_2 content has been neglected, and

V_i = volume of ith alevolus (ml)

c_i = CO_2 concentration in V_i (volume fraction)

Q_i = CO_2 delivery rate into V_i (ml/min)

Summing $\dot{Q}_i$ over all alveoli gives $\dot{Q}_{CO_2} = \sum_i \dot{Q}_i$. Labeling the end tidal rate of CO_2 concentration (volume fraction/minute) as $\left(\frac{dc}{dt}\right)_{ET}$, then $V_o\left(\frac{dc}{dt}\right)_{ET} = \dot{Q}_{CO_2}$

where V_o is defined by

$$V_o = \left[\sum V_i \frac{dc_i}{dt}\right] \Big/ \left(\frac{dc}{dt}\right)_{ET}$$

but may be referred to here as the "effective alveolar volume." The readily automatable formula

$$V_o = \left[\dot{Q}_{CO_2}\right] \Big/ \left(\frac{dc}{dt}\right)_{ET}$$

gives an effective index of end-tidal alveolar volume from the quotient of the mean CO_2 evolution rate divided by the end-tidal rate of increase of CO_2 concentration in the expired breath. This formula is valid only when the subject's ventilation rate and CO_2 production rate are steady. Its value is for an accessment of possible atetectasis, producing a decrease in effective alveolar volume. Also, end tidal CO_2 will provide information with regard to venous pCO_2 and the status of acid base balance.

The recommended method is the use of the pneumotachometer and rapid capillary sampling mass spectrometer. If CO_2 sensors with the required frequency response of 0 to 6 cps are developed, they are to be considered.

5. Neuromuscular Activity

The electrical activity associated with muscle contraction reflects two events: (1) discharge of motor neurons, and (2) the depolarization wave traveling over contracting muscle fibers. The wave form can be reproduced faithfully or it can be transformed prior to evaluation. One such transformation is high pass filtering, rectification and short time-constant integration which produces a slowly varying signal approximately proportional to the instantaneous mean myoelectric signal amplitude[116]. As total muscle tension is increased, two events occur.

One, the firing frequency of the active neurons is increased, and two, more neurons, and hence more motor units are activated. The second process, recruitment of motor units, is more important. The increase in muscle tension brings more active fibers within the scope of the surface electrodes. It has been shown that mean, or integrated myoelectric signal level is linearly related to muscular tension during isometric contractions[117, 118]. When skeletal muscle is impaired, as by the atrophy accompanying poliomyelitis, a similar recruitment occurs. Since each individual unit is now in some sense "weaker" than normal, a greater than normal number must be utilized to maintain a given tension level. Poliomyelitis represents a chronic muscle impairment, but much the same excess recruitment phenomenon is seen in more temporary impairments; for instance, those caused by fatigue. Eason[119] has reported that when a subject attempts to maintain an isometric muscle contraction at a set tension level, the EMG measured at that muscle increases as a function of time. The increase is caused by the activation of additional motor units as individual unit efficiency decreases, and appears fairly linear when integrated EMG serves as a measure of bioelectric signal strength. Thus, a muscle in poor condition would require additional motor units at a faster rate than one in good condition. Conversely, a muscle in peak condition would exhibit a slow rate of motor unit recruitment. This is the indication for the use of recruitment rate as an index of muscle fitness. The primary signal characteristics of the EMG obtained by surface electrodes are: frequency range, 2 to 5000 cps; amplitude, 0.1 to 5 millivolts; source impedance, 300 ohms to 50 kilohms.

The EMG signal should be obtained with low mass surface electrodes[120], utilizing a differential amplifier with the following specifications:

Input Impedance:	40 megohms
Common Mode Rejection:	100 db
Output Impedance:	Less than 1000 ohms
Frequency Response:	2 to 200 cps
Weight:	0.13 pounds
Volume:	1.1 in^3
Power:	0.1 watts

The EMG signal transformation shall be obtained by: high pass filtering with a steep-slope filter at 20 cps to eliminate baseline artifact, rectification of the

spiked EMG waveform, and short time constant integration with an active second order filter having a critical frequency around 2.5 cps and a damping factor near 1.0. The amplitude of the instantaneous mean myoelectric signal will be sampled at discrete intervals beginning with the initiation of isometric muscle contraction and continuing throughout the test period. The increase in mean EMG for a given Δt will be compared with previous recruitment rates for an assessment of muscle impairment. The muscle dynamometer will be utilized for the static contractions.

6. Skeletal Support

A measurement of urine and serum inorganic phosphorus is desired for a more complete evaluation of skeletal demineralization. Serum phosphate in subjects immobilized for prolonged periods is usually either normal or elevated. This will probably be the case in prolonged periods of weightlessness. Urinary inorganic phosphorus is expected to be normal or elevated.

These measurements of inorganic phosphorus (primarily phosphate) will give information on the degree of demineralization, the mechanism, and the effectiveness of conditioning programs. Restriction of activity removes the normal stimulus to anabolic processes in the skeleton, with a decreased resynthesis of osteoid tissue and, therefore, defective mineralization. This inadequate regenerative capacity of the bone (inadequate osteoblastic activity) will result in no increase in serum alkaline phosphatase which is a reflection of osteoblastic activity.

The recommended method for determining inorganic phosphorus in urine and blood is the technique of Fiske and Subbarow which can be done by the bioanalytical system spectrophotometer.

An alternate method is that of Baginski and Zak, which also can be done utilizing the bioanalytical system.

7. Digestion

a. Intestinal Motility

Transit times of the passage of a bolus down the gastrointestinal tract are desired for an evaluation of possible effects of weightlessness on intestinal motility. These effects are not expected to be severe, and the measurement is included primarily for screening purposes. No requirement exists for the use of endoradiosondes to obtain intra-luminal pressures. Information on intestinal motility can be achieved from the history, physical examination, and transit time studies.

(1) Recommended Method

The recommended method of evaluating intestinal transit times is the oral ingestion of dye capsules as powdered charcoal or carmine. The time of transit from ingestion to feces discoloration will be compared with pre-flight values in a longitudinal study of the duration of exposure to weightlessness.

(2) Alternate Methods

The use of radioisotopic tagged enteric capsules is not recommended, as the nature of the information obtained does not warrant the detection requirements and radioactive handling requirements.

b. Feces Analysis

The only analysis of feces that is desired is a test for occult blood. This is a screen for gastrointestinal bleeding that may occur secondary to possible esophageal ulcerations from regurgitation of gastric contents. The fecal flora was not felt to be a desired measurement. Provision can be made, however, for cold storage of fecal samples for post flight analysis.

A satisfactory method for feces occult blood is a standardized tablet test based upon the principle of the orthotolidin color reaction to occult blood. A commercially available table is the Hematest reagent tablet, manufactured by Ames Company.

8. Metabolism and Endocrine Balance

a. Urinary Glucocorticoids

The pituitary adrenal axis deserves study for the possible effect of periodicity factors of space. The diurnal variation in ACTH secretion is well known. Recent studies[121] have indicated that in Cushings syndrome (hyperadrenalism), the diurnal variation in ACTH secretion is largely absent, and the level of secretion is abnormally high. Whether this normal diurnal variation in ACTH activity and adrenal glucocorticoid activity will be altered, and, if so, will it be a change in period, phase, or amplitude are areas for investigation. The urinary 17-hydroxycorticosterones have been selected as representative of the dynamics of the pituitary adrenal axis. As discussed in preceding sections, the availability of onboard samples for post flight analysis will diminish the requirement for onboard analysis. However, it is recommended that where possible both onboard analysis and samples be obtained.

(1) Recommended Method

The standard method (Porter-Silber technique) is a biochemical assay utilizing the bioanalytical system. This technique requires incubation in a 37°C water bath for 4 hours, and is quite complex. For this reason, when onboard measurement is required, the recommended method is gas chromatography. A gas chromatograph that is typical of the unit required is the flight qualified chromatograph developed by Beckman Instruments for monitoring environmental gases. It would require modification for analysis of liquids in the form of a heater for vaporization of the liquid. Weight of the unit is 12 lbs; dimensions are 8"x8"x10"; volume, 640 cu in; power, 6 watts. Interchangeable chromatograph column could be supplied for the analysis of other steroids and catechol amines.

(2) Alternate Methods

The recommended alternate method for onboard analysis is the Porter-Silber technique utilizing the bionalytical system. Infrared absorption is another possible method; however, present methods require large infrared spectrophotometers.

b. Urinary Catechol Amines

The neurohormones epinephrine and norepinephrine produced by the adrenal medulla under the stimulatory regulation of the sympathetic nervous system are of interest for the following reasons: (1) the Russians postulated that dominance of the parasympathetic nervous system upon the cardiovascular system adapted to weightlessness will result in suppression of the sympathetic nervous system; (2) the level of norepinephrine activity in response to the anticipated hypotension of weightlessness; (3) the level of epinephrine activity in response to possible hypoglycemia, (4) the effect of periodicity factors on sympathetic activity, and (5) the effect of crew emotional interaction on sympathetic activity. All of these possible effects would require frequent sampling of urine. However, it is not felt that the analysis need be done on board the spacecraft. Rather, the gathering of samples for post-flight analysis is adequate. Alteration in the excretion of urinary catecholamines is not expected to have a severe or debilitating physiologic effect. The measurement is desired primarily for a further understanding of the mechanisms involved in cardiovascular adaptation to weightlessness.

(1) Recommended Method

The catecholamines are generally determined by fluorescence spectroscopy. The bioanalytical system described does not include a photofluorometer, however the types of spectrocolorimeters available can be modified into fluorometers.

(2) Alternate Method

The availability of a gas chromatograph would provide a means of separating and measuring the catecholamines.

9. Fluid and Electrolyte Balance

a. Extracellular Fluid

The volume and composition of the various body fluid compartments is maintained within physiologic limits by adjustments accomplished primarily by the kidney. Urinary excretion of water and salt may be effected

by the following cardiovascular factors: plasma volume, intracranial blood flow, cardiac output, pressure changes in various parts of the circulation, and renal blood flow. The factors will be affected by the weightless environment. To what effect volume composition and distribution of extracellular fluids will be affected is unknown. Information is desired on these characteristics. The distribution of extracellular fluid will be evaluated primarily by the physical examination. However, dependent edema will not occur. Adequate assessment must include body mass, intake and output, hematocrit, urine, and serum electrolytes. Where indicated by the results of these measurements, a measurement of extracellular fluid space may be desirable.

(1) Recommended Method

The recommended method of determining extracellular fluid space when indicated is the technique of inulin dilution. This "inulin space" corresponds closely to extracellular fluid space. The spectrophotometric determination of the space diluted inulin can be made with the onboard bioanalytical system.

(2) Alternate Methods

Other nonmetabalizable carbohydrates such as sucrose and mannitol are used but are not as accurate as inulin. Electroytes as thiocyanate, Na^{24}, Cl^{38}, and radiosulfate (S^{35}) have been used, but are not recommended as they either are not as accurate as inulin or require special radioactive handling techniques and radiation detectors.

b. Sodium (Urinary, Serum)

To aid in the definition of possible weightlessness effects on fluid and electrolyte balance mediated by the expected circulatory changes, a measurement of urinary and sodium potassium is desired.

Sodium is routinely obtained utilizing flame photometry. However, the equipment required is heavy and constitutes problems because

of the open flame. The recommended method for measuring urinary and serum sodium is a cationic responsive glass electrode.

c. Urinary Mineral Corticoids

The adrenal cortex hormones with profound effect on electrolyte and water metabolism are aldosterone, 11 deoxycorticosterone and 17 hydroxy-11-deoxycorticosterone. It is desirable to have information on the urinary levels of these mineral corticoids. However, the necessity for onboard analysis is replaced by the availability of samples of urine for post flight analysis.

If measurements are required on board, it is recommended that they be made utilizing a gas chromatograph with appropriate columns.

10. Hematological Response

A screening of hemostatic mechanism is desired. It is not anticipated to be affected by the space environment. However, if ionizing radiation levels are at a level to cause a significant effect on the blood platelets, then alterations will occur. For this assessment, a bleeding time determination is felt to be adequate. In addition, the morphologic examination of a blood smear will provide a qualitative assessment of the platelets.

Duke's method of determining bleeding time is recommended. In addition, during the finger stabs and venipunctures, an evaluation of hemostasis will be provided.

F. MEDICAL HISTORY

It is recommended that a comprehensive medical history be obtained from every crew member. The information to be obtained constitutes the symptomatology of man's response to the space environment. An example is pain, its location, duration, intensity, relief, etc. An outline of symptoms that were selected as pertinent to gathering information on man's well being in the space environment is presented in Table 23. The presence or absence of the symptoms is to be obtained. The format of obtaining this information can be a coded questionnaire, where only the positive responses are noted and amplified upon. The time

required to obtain this history is estimated as 5 to 10 minutes, depending upon the number and extent of the present symptoms. This information is to be obtained weekly.

TABLE 23. MEDICAL HISTORY SYMPTOMS

Sensation:

Vision:	Visual changes (blurring, grey-out, double vision) Blind spots (Scotoma) Lacrimation Pain, burning or itching
Audition:	Changes in hearing Tinnitus Discharge Pain, sense of fullness or pressure
Olfactory:	Changes in smell
Gustatory:	Changes in taste
Vestibular:	Vertigo (spinning sensation) "Motion sickness"
Somesthetic:	Paresthesias Body awareness Positional sense

Psychomotor processes:

Changes in coordination

Perception:

Visual illusions
Auditory illusions
Subjective orientation (body positional sense)

General Nervous System:

Headache
Sleep: Duration
Depth
Dreams

TABLE 23. MEDICAL HISTORY SYMPTOMS (cont'd)

Higher Mental Processes:

Concept formation and
Logical Reasoning change
Memory change
Attention change

Emotional Factors:

Pleasantness
Irritability
Hostility
Boredom
Anxiety
Hallucinations
Fantasies

Circulation:

Palpitation (pounding of heart)
Arrhythmias (beat skipping)
Chest pain, fullness or pressure
Orthopnea (shortness of breath while lying down)

Respiration:

Nasal obstruction, discharge
Sneezing
Nasal sinus pain, sense of fullness or pressure
Nasal irritation
Chest pain
Shortness of breath, difficulty breathing
Cough
Sputum: amount, consistency

Thermoregulation:

Subjective feeling of warmth, flushing
Sweating level
Chills

Neuromuscular Activity:

Muscle pain, cramps, fatigue
Muscle weakness, twitching
Incoordination

TABLE 23. MEDICAL HISTORY SYMPTOMS (cont'd)

Skeletal Support:

Bone pain
Joint pain, pressure
Stiffness
Back pain

Digestion:

Appetite, thirst
Food idiosyncracies
Nausea
Vomiting
Indigestion
Regurgitation, belching
Stomach distension or fullness
Gas (flatus)
Epigastric distress relation to food, sleep
Abdominal pain
Diarrhea
Defecation urge
Straining to defecate

Metabolism:

Thirst
Appetite
Faintness, dizzyness

Endocrine Balance

Fluid Electrolyte Balance:

Thirst
Frequency of voiding
Urinary retention
Urge to urinate
Difficulty in micturition
Pain or discomfort

G. MEDICAL PHYSICAL EXAMINATION

It is recommended that a comprehensive onboard physical examination be done on all crew members by the responsible medical monitor. It is further recommended that all space station crews include a physician, who will be

responsible for performing the physical examination and directing and conducting the experimental program. An outline of physical signs of pathophysiology that might occur in the space environment is presented in Table 24. The presence or absence of these signs should be evaluated and expanded upon when indicated. The Class 1 examination would be done weekly, and time estimates for completion are 20 minutes. The Class 2 examination would be done monthly, and time estimates for completion are 30 minutes. The required equipment consists of: opthalmoscope/otoscope, flash light, tuning fork (128 cps), percussion hammer, stethoscope (bell and diaphragm), tape measure, goniometer, and analgesiometer (pin and cotton). Estimates of the package weight are 2.5 lbs and package volume, 100 cu in.

TABLE 24. MEDICAL EXAMINATION SIGNS

Class 1 Examination: ** Items
Class 2 Examination: All Items

I. Pschophysiological Performance

A. Sensation

1. Structural Integrity:

a) Eyes:

**1) Opthalmoscopic Examination

retina: scars
disk: papilledema (increased intracranial pressure)
vessels: pulsations, relative A/V size

**2) Intraocular Pressure

digital palpation

**3) Eyelids

edema

**4) Conjunctivae and Sclerae

redness, congestion, edema
lacrimation and lacrimal drainage

**5) Cornea

ulceration, keratitis

b) Ears:

1) Color
cyanotic hue
polycythemic hue

**2) Auditory canal and Tympanic membrane
(otoscopic examination)
discharge, color, light reflex

c) Nose:

Intranasal examination
mucosa: color, swelling
discharge: amount, character

II. Neurological Examination

A. Cranial Nerves

1. Optic - II

**a) Visual acuity
visual acuity charts for far and near vision

b) Visual vields
confrontation fields

**c) Opthalmoscopic examination
retina, retinal vessels, optic nerve, macula

2. Oculomotor - III

**a) Pupillary reaction to light and accomodation direct and consensual

b) Range of movement of eyes

3. Trigeminal - V

Sensory function
corneal reflex

TABLE 24. MEDICAL EXAMINATION SIGNS (cont'd)

4. Abducens - VI

impaired lateral movement of eyes

5. Facial - VII

a) Upper division

b) Lower division
show teeth
naso-labial fold

6. Acoustic-vestibular nerve - VIII

**a) Hearing
tuning fork, 128 cps, used for air and bone conduction

**b) Vestibular testing
rotational test
caloric test

7 and 8. Glossopharyngeal and Vagus - IX and X

a) Disturbance in swallowing or phonation
**b) Soft palatal (uvula) movement and position
c) Unilateral loss of gag reflex

9. Accessory - XI

Upper trapezius strength in elevating shoulders

10. Hypoglossal - XII

Protrude tongue and evaluate for deviation and strength against tongue blade.

B. Reflexes

Hyperactive: 1+, 2+ (unsustained clonus), 3+ (sustained clonus);
Normal:
Hypoactive: -1, -2, -3 (absent)

	Right	Left
1. Biceps		
2. Triceps		
**3. Radioperiosteal		

TABLE 24. MEDICAL EXAMINATION SIGNS (cont'd)

**4. Knee

5. Ankle

6. Knee clonus

7. Ankle clonus

C. Abnormal Muscle States

**1. Atrophy

a) Note change in contour or configuration of involved muscles.

b) Actual measurement of circumference of limbs to be made.

D. Coordination

**1. Finger-nose test

**2. Romberg test

E. Sensation

1. Superficial sensation

** pain - test by use of pin
** lighttouch - test by use of cotton wisp

2. Deep Sensation

Vibration Sense - test by use of 128 cps tuning fork on bony prominences as shin or malleoli.

Position Sense - test by moving big toe and requesting position information.

F. Speech Disturbances

**1. Articulation

Slurred speech of cerebral involvement occuring in intoxication, hypoxia, etc. Characterized by hurried, careless speech, omission of letters, phrases, syllables and phrases and running together or works. Test with phrases as: "Third riding artillery brigade". "Methodist Episcopal", "newly laid linoleum", "truly rural", "around the rugged rock the ragged rascal ran".

III. Circulation

A. Pump (Heart)

1. Electrical Activity

Rate and rhythm

a) Auscultation of precordium and manual count with aid of wrist watch.

**b) Palpation of radial pulse and manual count with aid of wrist watch.

2. Mechanical Activity

**a) Heart sounds

Auscultation with stethescope over valvular areas to include pulmonary, aortic, mitral and tricuspid valves in full expiration.

**b) Contractive impulse

Inspection and palpation of the point of maximum impulse (PMI).

c) Size and Contour

Percussion of left and right heart border of dullness.

**d) Pressure

Occluding cuff-sphygmomanometer-aneroid apparatus at brachial artery.

B. Peripheral Circulation

**1. Arterial

a) Pressures

Occluding cuff sphygmomanometer-aneroid apparatus at brachial artery.

2. Venous

** Venous distension noted in peripheral veins of the extremities

TABLE 24 . MEDICAL EXAMINATION SIGNS (cont'd)

** Presence or absence of varicose veins

** Presence or absence of pitting edema

** Venous collapse pressure measured on dorsum of hand and flexor surface of forearm

** Color of skin overlying lower extremities
cyanosis or abnormal pigmentation
Circulation time
arm to tongue with decholin

IV. Respiration

A. Thorax

a) Percussion

Anterior and posterior lung fields to be percussed when indicated

**b) Auscultation (breath sounds)

Anterior and posterior lung fields evaluated routinely. Bases evaluated most closely.

**c) Respiration rate and quality of breathing evaluated.

B. Paranasal sinuses and nasal antrum nasal mucosa, turbinates evaluated with rhinoscope. Where indicated, transillumination of paranasal sinuses.

V. Thermoregulation

**A. Temperature

Oral temperature

**B. Perspiration

Occurrence and qualitative assessment of amount and distribution.

VI. Skeletal Support

A. Joint range of motion

*Qualitative assessment of range of motion of shoulder, elbow, wrist, digits, hip, knee and ankle. Where indicated, calibrated measurements with goniometer to be made.

TABLE 24. MEDICAL EXAMINATION SIGNS (cont'd)

VII. Digestion

A. Inspection

**1) Lips
Color and dryness, occurrence of herpes simplex and petechiae.

2) Buccal Cavity
Eruptions, pigmentation, pallor

3) Tongue
Pallor, tremor, dryness, evidence of thrush

4) Pharynx
Injection and inflammation

B. Palpation

**1) Abdomen
Liver and spleen size
Areas of abdominal tenderness, especially epigastic tenderness

C. Auscultation
bowel sounds

VIII. Metabolism and Endocrine Balance

A. Inspection and Palpation
Thyroid size

IX. Fluid Electrolyte Balance

A. Regulation

**1. Skin turgor, thickness
**2. Mucous membranes

B. Exretion

1. Costovertebral angle tenderness

X. Hematological Response

A. Formation

1. Regional lymphnode size

B. Activity

**1. Petechiae - mucous membranes, skin
2. Purpura - skin

C. Destruction

1. Jaundice
skin pigmentation
sclerae pigmentation

H. HUMAN FACTORS

1. General

The psychological measurements selected to provide information on anticipated psychological responses are grouped into 2 categories: Class 1, required measurements; and Class 2, desirable measurements. Within each of the categories, the measuring instruments and techniques are listed and described. For each selected measurement of a recommended measurement technique an alternate measurement technique is given. The characteristics of all measurements are discussed in relation to (1) the measurement variables, (2) method of test presentation and administration, (3) testing time required, and (4) psychometric characteristics. When information exists on score range, variance, reliability, validity, and factorial composition, it is included in the data provided on the psychometric characteristics. The approach to the solution of the measurement instruments and techniques has been to emphasize good measurement principles in order to achieve reproducible measurement so important for critical evaluation of performance during the sequence of phases of space flight.

Table 28 provides a listing of the equipment required for the recommended and alternate measurement techniques of the selected psychological performances. Specifications of size, power, and weight for each equipment item are given. Table 25 outlines the psychological measurements.

2. Required Class 1 Measurements

A) VESTIBULAR

Acceleration Thresholds:

I) Linear - the perception of motion occurring in a straight line in the absence of other cues.

Required:
- a) Darkened, visually isolated space with masking sound damping
- b) Moveable "carriage" for subject w/visual fixation on carriage
- c) Provision to move carriage at calibrated acceleration
- d) Signal device from subject to indicate perceived motion.

Recommended Technique: Using a platform with foot straps for constant foot placement, apply controlled linear acceleration until subject indicates, by pressing

TABLE 25. RATINGS OF ANTICIPATED EFFECTS OF ENVIRONMENT ON MAN'S PERFORMANCE

Psychological Characteristics	Weightlessness	Dynamic Factors	Ionizing Radiation	Cabin Atmosphere	Contaminants	Thermoregulation	Circadian Rhythms	Psycho-Physiological Factors
SENSORY								
A. Visual Attributes:								
1. Sensitivity to:								
a. Brightness		2 +						
b. Color		2++			3++			
c. Spatial and Temporal in Homogeneity	1 +	2 +		2+	3 +			
2. Ability to:								
a. Focus at Varying Distance								
b. Coordinate Visual Axes	2 +	2 +						
c. Adapt to Intensity Level				2 ++				
3. Visual Fields		2 +			3 +			
B. Auditory Attributes:								
1. Pitch Discrimination		2 +		2 +	3 +			
2. Loudness Thresholds		2 +		2 +	3 +			
C. Vestibular Functions	1 +++	1 +++						
D. Somesthesis	3 +	3 +				3 +		
E. Kinesthesis	1 +++	2 +++		3 +	3 +	3 +		

PERCEPTUAL								
A. Visual	2 ++	1 +++		2 +	3 +			2 +
B. Auditory	3 +	3 +			3 +			
C. Vestibular (illusions)	1 +++	1 +++			3 +			
D. Somesthetic	3 +	3 +			3 +			
E. Orientation	1 +++	1 +++			3 +			
F. Temporal	3 +	3 +					2 +	3 +
G. Kinesthetic	1 +++	1 +++						
PSYCHOMOTOR PERFORMANCE								
A. Tracking	2 ++	2 ++			3 +			
B. Reaction Times	2 ++	2 ++		2 +	3 +		3 +++	
C. Gross Motor Performance	1 +++	1 +++		3 +	3 +		3 +++	
D. Fine Motor Coordination	2 +++	2 +++		3 +	3 +			
E. Speech		3 ++			3 +	3 +		
MENTAL ABILITIES								
A. Concept Formation		3 +			3 +	3 +		
B. Logical Reasoning		3 +			3 +	3 +		
C. Number Facility		3 +			2 +	3 +	3 +	
D. Memory	2 +	2 +			2 +	3 +		
E. Data Transfer					3 +		3 +	
F. Monitoring					2 +	3 +	3 +	
G. Attention	2 ++	2 +			2 +	3 +		
H. Verbal					3 +			
I. Spatial (visualization)					3 +			
J. Judgment					1 +	3 +		2 +
PERSONALITY								
A. Affect	2 ++	2 ++			3 ++	3 +	2 ++	
B. Activity							2 ++	2 +++
C. Ideation	1 +++	2 +			3 +	3 +	2 +	
D. Social Behavior					3 +	3 +	2 +	2 +++

NOTE: This table is a condensation of anticipated psychological responses to the listed environmental conditions. Only those psychological response categories which were judged probable in some degree are included.

LEGEND: Medical Significance

1. Required data
2. Desired data
3. Not essential data

Anticipated Response

+ = Possible
++ = Probable
+++ = Definite

a button that he senses acceleration. Horizontal thresholds should be in the range of 2 to 20 cm/sec^2. Each trial is restricted to a maximum of 10 seconds or a maximum movement of 2 meters.

II) Angular: The perception of rotational motion in the absence of other cues.

Required:

a) A modified Barany chair with controlled acceleration drive

b) Recording device to show chair acceleration at moment subject indicates he perceives a change

c) Fixation light affixed to chair

d) Provision to minimize extraneous visual, auditory and kinesthetic cues, such as:

Visual	i)	Blindfold
	ii)	Darkened room light
	iii)	Optical isolation through two-color filters; i.e., green enclosure and red goggles; fixation light inside green enclosure
Auditory	i)	Masking tone through ear-phones
	ii)	Constant motor sound with variable speed drive on Barany chair to prevent directional cues
Kinesthetic	i)	Heat rest to fix head and neck position
	ii)	"Dish" arm rests to fix arm and shoulder positions

Procedure: Subject is seated in the Barany chair and isolated with respect to vision and audition. He is instructed to depress signal button when he senses movement. Chair motor is on, and rotation initiated at slowest possible rate of acceleration. If no response has been indicated in 10 seconds, chair is decelerated at same rate to zero and motion is again initiated at a slightly higher rate. At all times, the rate of deceleration is no greater than the corresponding rate of acceleration, and acceleration stops when reported by subject.

Various rates and times are reported - from 0.12 degrees/sec^2 to 2 or 3 degrees per second for a period of 14 to 16 seconds.

Time: 10 to 15 minutes will be required for these measurements.

Psychometric Characteristics: None reported.

B) ORIENTATION

The subjective frame of reference in which the physical surrounds are perceived.

I) Major Variables:

a) Physical orientation

b) Perceptual interaction with environment

II) Recommended Procedure: A situational test is used in which a blindfolded subject is disoriented in a familiar location, with the requirement that he attain a given location and posture. Performance is scored by two observers, using a sequential rating form and checklist on which specific activities during the reorientation process are noted and/or evaluated. Evaluation also included a measure of the time required for resolution of the situation.

III) Alternate Technique: A situational test similar to the recommended test is used, but it is self-administered by the subject and scored using the same evaluation scale as for the recommended test. In addition, open-end questions are included concerning the subject's own effectiveness of behavior in the test situation.

IV) Presentation: The subject is shown familiar surroundings including volume, target location information, and posture relationships to the surroundings. Then the subject is blindfolded, put in a slow tumble and roll, and a timer is started. Both observers maintain themselves out of contact with the subject while he determines his present location and maneuvers to attain the target location. During this time, both observers are also noting and

immediately rating segments of the total process such as "efficiency of stopping tumble," "efficiency of exploratory behavior," and "directness of physical approach to target," as well as checking for occurrence of specific behaviors during the recovery and redirection process. Upon completion of task, the timer is stopped, time recorded and blindfold removed from the subject. At this point, if the alternate procedure is desired, the subject immediately fills out an evaluation form pertaining to his own evaluation of his performance.

V) Time: This behavior sample should be limited to five minutes duration. If orientation has not been achieved in that time, the trial is terminated.

VI) Psychometric Characteristics: Unknown.

C) KINESTHESIS

Kinesthesis may be considered as composed of static and dynamic aspects. Static position stimuli provide information about body position or position of body members at rest; dynamic stimuli are generated by the active components of a movement, including information on movement to a specific position or location.

Major variables:

1) Extent of movement required
2) Precision with which change of position is to be achieved
3) Time in which movement, or lack thereof, is to be made

I) Position

a) Sensing:

Recommended: A blindfold steadiness test in which a metallic stylus must be held within a conducting ring without touching the edges. Score is a combination of time the stylus is in contact with the edge of target and the number of times contact is made.

Alternate: Blindfolded subject, strapped in a seat, is rotated slowly in a relaxed state. After 60 seconds, he is told to report on position of arms, or legs, relative to trunk position. Scoring is estimated accuracy of report.

This technique is probably useful only in a weightless environment, but might be applicable under constant acceleration.

b) Attaining Position:

Recommended: A standardized movement test in which the arm is moved from a predetermined starting point to a specified terminal position. This can be achieved through having subject depress a "start" button and then move his arm and hand to a predetermined target button from a bank of such buttons. Releasing the start button starts a timer which is stopped when the target button is depressed. This yields an accuracy-bound time measure. The relative positions of the start and target-button panel can be adjusted as desired, probably around a mean angular separation of 45°.

II) Dynamic Movement:

a) Active: Movement Thresholds. In the simplest form, this will involve only a measurement of the minimum distance a body member must be moved to yield a perception of movement.

b) Recommended: With subject in a standard position, probably "seated," with non-preferred arm extended, a resting or steady position is assumed, and the

subject is then asked to move the arm in a specified direction, without visual guidance and to report when he has made the smallest detectable movement. The final position is measured. At least 10 measurements should be made on each selected axis. For measurement, some variety of a magnetic field with probe may be useful in this context, translating movements into an induced voltage analog.

c) Passive: Extent and direction of motion of body member in the absence of intentional movement.

d) Recommended: Same arrangement as above with measure of excursion taken over a temporal span of either 30 seconds or 1 minute. If preliminary studies justify it, a three-axis field and probe arrangement will yield precise vectors of movement.

e) Psychometric Characteristics: Not known, This is one area where relatively little research has been reported, and no measures reported which include psychometric characteristics of the measuring technique or device.

D) KINESTHETIC TRACKING

Dynamic Sensitivity

Rate Matching

Recommended: Present a rate by moving the subject's limb at a given rate, or present a moving light beam or shadow at an angular rate which the subject must track. Require matching of the rate without assistance. Score in terms of error in matching average rate; that is, error in time to traverse prescribed distance between two photocells.

3 digits of accuracy

5 repetitions at each of 4 rates

Alternate: The subject moves a limb between two photo cells. Subject is given knowledge of results either as time or rate and then is given a command to produce one of four given rates. The procedure is repeated at the given rate command until 3 traverses are made within some tolerance (say 10%) of the commanded rate.

Time: approximately 5 minutes

Psychometric Characteristics: Not known.

E) GROSS MOTOR COORDINATION

I) Ambulation - Walking, moving about. Literally, the ability to move from place to place.

a) Major Variables:

i) Initial location and posture

ii) Desired terminal location and posture

iii) Sequence of movements to transverse distance between i and ii.

b) Recommended Technique: Ambulatory Work-Sample:

A standard ambulatory task may be used in which subject moves from a fixed starting location and posture via a specific activity sequence to a termination point and posture in a specific location. The procedure is scored in terms of time to complete the total task and/or time to complete selected "sub-ambulations." Also, the quality of movement is scored by rating it against a standard rating scale.

c) Alternate Technique: Discrete Ambulations: Subject can perform a series of discrete ambulatory maneuvers and ratings can be made of maneuvering effectiveness.

d) Presentation and Time for Recommended Task: Subject assumes starting posture and, upon signal, begins the ambulatory sequence. Upon termination, elapsed time is recorded and quality of movement is rated. Time: 1 to 2 minutes.

e) Psychometric Characteristics: Undetermined.

II) Pressure Suit Donning and Doffing

a) Recommended: Time measure from shirt-sleeve status to full suited pressure-integrity, each man working alone. This represents a critical individual skill which must be developed and maintained.

b) Alternate: Time measure from shirt-sleeve status to suited pressure integrity in team operation.

c) Procedure: An unannounced tone will be used to signal individual or team donning of the suit. A timer will start at the onset of the signal and continue to operate until turned off by some device such as a pressure valve on the pressurized suit. This "timer-cut-off" may provide an independent check on suit operation, and serve as a supplementary function in the timing circuit.

d) Time: Approximately 5 minutes should be required.

e) Psychometric Characteristics: Undetermined.

III) Ballistic Aiming: A directed thrusting of the arm and hand, includes such activities as reaching and grasping.

a) Major Variables:

i) Target characteristics - size, movement

ii) Target orientation - horizontal, vertical

iii) Subject - target relationship

b) Recommended Technique: Subject strikes rhythmically at a rotating target.

i) Target at periphery of a rotating disc making a circle of 11" diameter, rotating at a rate of one revolution per second. Target is a 3/4" metallic disc.

ii) Subject must strike with hand-held metal stylus at target disc once each revolution starting from a retracted arm position.

iii) Subject is scored on number of times he strikes 3/4" target with stylus in 30 seconds (30 rotations).

c) Alternate Technique: From seated (and strapped) position in front of test board, subject must reach to each of five handholds in sequence. Each handhold is equipped with a "grip-switch," which records time it is activated. Time on this task is time from start signal until the fifth switch is activated.

d) Presentation (recommended technique): Subject stands about 11" to 12" in front of horizontally rotating disc, holding stylus in preferrred hand. Elbow is bent so that hand is almost touching the shoulder. At the signal to start, subject strikes at target and continues to strike once each target revolution. Score is the number of hits in a 30 rotation sample. Time required: about one minute.

e) Psychometric Characteristics:

Expected Mean:	19
Expected Standard Deviation	2.6

Score Range = 0 to 30

IV) Large Item Manipulation and Force Application:

a) Major Variables:

i) Length, width, and height of item

ii) Shape of item - "bulk"

iii) Type of manipulation sequence

iv) Mass of item

b) Recommended: A standard item and manipulatory task. Item specifications may be in the range with no handholds provided:

Size: 2' x 2' x 1'

Specific Density: 0.5

Surface: Light texture such as parcel wrapping paper. On Earth it might be required that the item be moved a horizontal distance of two feet and one foot vertically when the item and handler are on separate low-friction devices. In space, the item would be required to be moved two feet horizontally and one foot vertically. This task would require an observational rating technique, based on time to complete the task and the quality of movement with which it is completed.

c) Alternate: The application of leverage in selected directions using a box wrench or a similar tool. The task might involve application of force through a 90° arc in a plane parallel to the frontal plane of the body and then separately another application of force in a plane parallel to the sagital plane. In both planes, clockwise and counter clockwise directions could be

controlled through an adjustable hub at the center of the force arc.

NOTE: These measures could be used in both the tethered and the untethered state.

d) Presentation:

i) Recommended Techniques: Subject stands facing "container." At the signal to start, the timer is started and the subject effects translation of the container from its original to its designated terminal position. The observer evaluates false start, efficiency of motion, initial force application, and retarding force applications. When the container is stopped in its designated spot, the timer is stopped. Score is a weighted combination of time and quality of movement ratings.

ii) Alternate Technique: An adjustable hub is preset to a standard resistance (probably about 10 foot pounds), and the unit is oriented parallel to the frontal plane. It is required that a lever in an up or a vertical position be rotated clockwise about the hub to the horizontal position. An observer records time required and evaluates efficiency of force application technique by means of the rating scale. This is repeated from the vertical to the horizontal using a counterclockwise rotation, then, parallel to the sagital plane, both clockwise and counterclockwise towards and away from the subject.

e) Time: From 2 to 4 minutes

f) Psychometric Characteristics: No standardization data is available on these test procedures.

V) Limb Steadiness: See recommended procedure for Static Kinesthetic Measurements.

F) MASS DISCRIMINATION

I) Major Variables:

a) Mass ranges

b) Comparison masses

II) Recommended Technique: Four series of masses are to be used with standards of 60, 250, 1000, and 4000 grams. Each stimulus object ends in a cylindrical top about 1" in diameter, and is composed of material homogeneously distributed. Comparison stimuli will vary from each other by 2 grams for the 60 gram standard, by 8 grams for the 250, by 30 grams for the 1000 and by 125 grams for the 4000 gram standard. Five comparison stimuli on each side of the standard will comprise the series. Thus, for the 60 gram standard, 11 masses are required on each of 50, 52, 54, 56, 58, 60, 62, 64, 68 and 70 grams. Stimuli are presented by the constant method, from a semi-automatic magnetic turn table.

III) Alternate Technique: Using the same ranges and standards as above, using a magnetic table as a base, the masses are to be arranged in order by the rank-order method.

IV) Presentation: Subject (S) is seated (or equivalent) with arm in an arm rest. S is blindfolded, or a hood obscures his vision of the turntable. The Experimenter (E) presents the stimulus combinations in a predetermined order, but with the standard always presented as the first of a pair. As the standard is in position beneath S's hand, E releases the magnetic control. S "lifts" the first weight and returns it to the table. Returning the mass to the table reactivates the magnetic table, which is then turned to put the desired comparison stimulus in the "lifting" position. Again E releases the magnets and S lifts the second member of the pair, and returns it to the table. S reports his evaluation of the second mass relative to the standard.

In the alternate arrangement, S controls the magnetic table as required, and evaluates the mass of each stimulus, arranging as desired, only reporting when he is satisfied with the rank order of the stimuli.

V) Time: About 6 minutes are required for each procedure, although until both S and E become familiar with conditions of the experiment, this time may need to be doubled.

VI) Psychometric Characteristics: If the results of a study by Rees and Copeland[122] using a low friction table can be extrapolated to weightlessness, the difference thresholds for mass discrimination can be expected to be about 10% of the standard, i.e., a weight must differ from the standard by about 10% to be correctly identified as difference 50% of the time

G) VISUAL ACUITY

I) Visual Acuity is the primary visual mechanism for sensing changes in environment which occur as a function of light frequency and sharp intensity gradient inputs of adequate measure. Critical factors in acuity determination are:

a) Type of Target

i) A Pair of Parallel Bars: length = 3 x width with an equal width gap between the two. Width range from 0.435 min to 2 min of arc.

ii) Landolt C: broken ring with length of break equal to width of the ring - gaps range from about 0.4 min to 10 min of arc.

iii) Grating: a grid with contrasting stripes of equal width. Width range from about 0.5 min to 10 min of arc.

iv) Fine Line on Homogeneous Background: line width varies from about 0.0063 min to 10 min.

v) Disc on Homogeneous Background: from about 0.6 min to 4 min of arc.

vi) Interrupted Contour: for vernier acuity - displacements of contour from about 2 to 6 sec of arc.

b) Target Contrast: relative reflectivity of figure and ground in target. Generally should be in the range of 30% to 80% (for a given illumination intensity, threshold acuity is about constant over this range).

c) Illumination Level: Ranges for research work from 1 to 100 ft candles. 12 ft candles at the target may be chosen (NRC-NSF Committee on Vision recommendation).

d) Exposure Time: Not likely to be a factor, but can be controlled from 1 millisec to any extent desired. The most probable arrangement will be "demand" time; i.e., each target is viewed as long as required.

II) Recommended:

a)	Target	Grid or Checkerboard
b)	Target Contrast	75 - 80%
c)	Illumination	12 ft. candles
d)	Exposure Time	as required

III) Alternate:

a)	Target	Landolt C
b)	Target Contrast	50-75%
c)	Illumination	6 - 18 ft. candles
d)	Exposure Time	as required

IV) Reliability: Test-retest, criterion of number right to 2 successive errors (N = 261), for recommended method =0.81; for alternate method = 0.80.

V) Factor Structure:*

	Checkerboard	Landolt C
Resolution	.91	.81
Brightness	-	.23
Letter	-	.18
Form	-	-

* Weighted r to z transformation of factor loadings from 3 comparable analyses.

VI) Validity: As a predictor of retinal resolution, the validity of these techniques can be inferred from the factor loadings, assuming that the criterion is "retinal resolution." Actually, this is a special case of the more general situation in which a specific performance criterion is included in the intercorrelation matrix.

VII) Administration: Targets to be presented in a suitable stereo-viewing device (such as Bausch and Lomb Orthorater) which permits control of illumination and incorporates optical compensation for "far-point" (6-meter) measurements. Measurements are to be made on each eye separately and both together. Score on test is the number of correct responses prior to two consecutive errors.

VIII) Estimated time to measure: 4 minutes (includes Right, Left and Both at near and far points).

H) CRITICAL FLICKER FREQUENCY (CFF)

I) CFF is the rate of change at which visual flicker is extinguished and a smooth fusion takes its place - (English and English, Dictionary of Psychological and Psychoanalytic Terms). Major variables in CFF determination are:

II) Recommended

a)	Wavelength of illumination	a)	Green (520 m μ) illumination
b)	Light intensity	b)	1 ML
c)	Distance of target from the eye	c)	13 inches
d)	Size (length and width) of flickering target	d)	2°
e)	Area of retina stimulated	e)	Foveal (with artificial pupil)
f)	Light - Dark ratio (L/D)	f)	L/D = 1.00 (50/50)
g)	Surround	g)	No surround

III) Alternate

a)	Wavelength of illumination	a)	Polychromatic (white) light
b)	Light intensity	b)	10 - 12 ML
c)	Distance of target from the eye	c)	13 inches
d)	Size (length and width) of flickering target	d)	2°
e)	Area of retina stimulated	e)	Central - no artificial pupil
f)	Light-Dark ratio (L/D)	f)	L/D = 1.0
g)	Surround	g)	10-20° surround, 5-6 ML

These differ in area of retina stimulated, wavelength and intensity of light used. By choice of an L/D ratio = 1.00, the maximum CFF is obtained. The 2° target, related to surround, assures restriction to the desired retinal area, and the foveal fixation again maximizes the CFF. The use of an artificial pupil is recommended to minimize stimulation of areas outside of the intended focal stimulus area. Based on curves presented by Bartley,[123] an illumination level of 1 ML yields, under the above conditions, a CFF which, while not maximum attainable, is in the range of 30-32 cps and is easily obtainable by electronic or mechanical means. Transmitted light is preferred to reflected light because of maximum contrast between the light-dark phases achieved while no problem of reflection from the black surface of the stimulating disc is created as in the case of reflected light. Green light 520 mμ) is reported by Bartley (p. 122) to have minimal effect on the CFF as a function of stage of dark adaption, and hence it should minimize the pre-measurement adapting time as a standardization requirement.

IV) Presentation Requirements: Headrest and artificial pupils for binocular viewing. Flashing speed of light is increased from zero to the point where final flicker vanishes, then, from a rate of flashing 10% to 15% greater than fusion frequency, the rate is decreased until flicker is again detected. Five measures in each direction (ascending rate and descending rate) or 10 measures per subject are to be secured at each scheduled session.

If peripheral measures are desired, equipment can be mounted on the arm of a clinical perimeter.

V) Administration Time: About 5 minutes per subject.

VI) Psychometric Characteristics: CFF is an established laboratory-type measure. There has been no recognized work to produce a standardized test from a psychometric standpoint.

I. IDEATION

Ideation can be measured by checklist, inventory, or rating techniques.

3. Desired Class 2 Measurements

A) TRACKING

I) Definition of Tracking: The serial responses of a human operator in minimizing the perceived error between the intended and an attained track.

II) Major Variables:

Dynamics
Degrees of Freedom
Input
Display
Controls
Resolution

III) Recommended Techniques: The recommended techniques require either (1) an independent training and testing module, or (2) training and testing mode circuits for use with spacecraft displays and controls.

The recommended method attempts maximum fidelity of presentation of the systems and dynamics of the critical tasks of re-entry and landing, considering the following major characteristics of spacecraft tracking:

a) Degrees of Freedom: Six degrees of freedom operate; three in attitude and three in translation. There is varying interdependence, however, depending on the stage of the mission profile; i.e., orbit, re-entry or gliding.

b) Dynamics: The dynamics are acceleration in orbit and rate in gliding flight.

c) Inputs:

i) In Orbit: Input characteristics in orbit require pre-programmed attitude or random drifting orientations. These are modified as the operator maintains attitude against random appearing

disturbances, and effects computed changes in translational rate at specified retro-fire times while holding computed attitudes.

ii) During Re-Entry: Input characteristics during re-entry require maintenance of pre-programmed and/or computed attitudes against aerodynamic disturbance.

iii) During Gliding Flight: Input characteristics during gliding flight require attitude control to control flight path against aerodynamic and wind drift influence.

d) Displays:

i) Attitude: Integrated three-axis ball attitude position display and three-axis needles for attitude rate display should be used. The position display resolution should be to the nearest five degrees.

ii) Translation: A computed digital rate increment display in compensatory mode should be used. This requires only one dimension of information because of the three-axis attitude capability.

e) Controls:

i) Attitude: Integrated three-axis joystick attitude control.

ii) Translation: Single-axis lever translation control.

iii) Alternate Technique: An alternate approach would make maximum use of existing spacecraft tracking and sensing systems when not otherwise employed, without making any changes in hardware.

IV) Presentation and Time:

a) Recommended Technique: Imbedded in a re-entry training and test procedure, the subject is presented with a flight work-sample, starting with a

representation of a drifting flight and requiring maneuvering to a pre-selected attitude, maintenance of the attitude against "drifting influences," and application and control of thrust to obtain a "computed" rate decrement. While maintaining attitude, reorientation to a new attitude and maintenance of that attitude against forces increasingly aerodynamic in character, attitude changes to make use of the limited lift of the re-entry configuration, and finally scheduled maneuvers with paraglider aerodynamics including landing can be made. The centrifuge may be used to provide G in appropriate maneuver sequences if a separate training and test module is used.

b) Equipment: Requirements are for actual or duplicates of actual mission tracking hardware equipment to realistically program the displays, commands, and equipment to score responses against operational requirements and past performance, possibly using some form of an RMS technique.

The presentation can be done in fast time or in various segments shortened to give testing times from 5 to 20 minutes.

c) Alternate Technique: Bring vehicle attitude to commanded position from drifting flight, maintain attitude, change attitudes, go into three-axis tumble using thrusters, and recover, return to commanded attitude, apply translational thrust, and maintain attitude against translational thrust misalignment.

Many of the described actions will be required in regular operations. Therefore, if procedures for evaluation of performance from data from spacecraft situation sensors can be standardized, fuel-consuming special maneuvers will not be required.

The testing can be accomplished in from 5 to 10 minutes in a block or in a set of shorter segments as regular operations require.

V) Psychometric Characteristics [124,125]: Psychometric characteristics are specific to the specific form of the test, the entire test battery administered, the population tested, and the purpose for which the scores are to be used.

The data in Tables 26 and 27 indicate the general nature of the psychometric characteristics of related tests.

TABLE 26 . RELIABILITIES OF VARIOUS MEASURES OF TRACKING PERFORMANCE IN A COMPLEX TRACKING TASK AFTER "CONSIDERABLE PRACTICE" (126)

Integrated Error (T)	Horizontal Error (X)	Vertical Error (Y)	Sideslip Error (Z)	Time-on-Target
.89	.56	.67	.96	.89

Notes:
a. $T = (1/2)\ x + (1/2)\ Y + Z$
b. Dynamics similar to airborne radar intercept mission
c. N = 203
d. Practice consisted of 17 sessions distributed over 6 weeks. Each session consisted of 21 one-minute trials.

TABLE 27. TEST, RETEST RELIABILITIES, VALIDITIES AND FACTOR LOADINGS OF TESTS REQUIRING PERFORMANCES RELATED TO TRACKING

	Reliabilities as Available	Validities for Selection of Pilots, Navigators and Bombardiers	Space Relations	Visualization	Mechanical Experience	Psychomotor Coordination	Finger Dexterity	Perceptual Speed	Pilot Interest
1. Complex coordination	0.85 - 0.95	0.13 - 0.40	17-48 / 0.52	0.27	0.36	10-0.46 / 0.50	0.34	0.30	
2. Two-hand coordination	0.89 - 0.93	0.12 - 0.35	8-0.44 / 0.62		8-0.34 / 0.54	10-0.40 / 0.53			0.27
3. Rudder control	0.90 - 0.92	0.30	0.50	3-0.28 / 0.35	0.27	7-0.36 / 0.48			0.25
4. Rotary pursuit	0.92 - 0.97	0.14 - 0.26	0.26			8-0.54 / 0.65	3-0.27 / 0.38	0.47	

KEY: Underlined Numbers: Number of studies - median factor loading

Non-underlined Factor Loadings: Maximum loading reported (loadings less than 0.25 were not reported)

B) FINE MOTOR COORDINATION

I) Small item manipulation and dexterities involving precision positioning, grasping, turning, and repositioning activities using, essentially, hand and finger movements. These activities may require use of one hand or both hands. The hands may be working individually or together.

a) Major stimulus variables:

i) Items to be manipulated

ii) Specific manipulation involved

b) Recommended technique: Modified Purdue pegboard using metallic pegs with magnetic inserts in the base of the holes, measuring both right-hand manipulation and use of both hands.

c) Alternate Technique: Use of special dial-setting device using three setting dials and one recording rotary switch. Each dial is calibrated into 10 units (0 through 9) and, in a window above each dial is shown the digit to be set on that dial. Use of the recording switch scores the setting accuracy of the setting dials and inserts the next problem in the windows.

d) Presentation:

i) Recommended:

a) Right Hand: The subject is required to place a number of small pegs individually in a series of small holes as rapidly as possible with the right hand. Score is the number of pegs placed in two 30-second trials.

b) Both Hands: The subject is required to pick up two pins at a time, one with each hand from different trays, and place them simultaneously in two different holes. Score is the number of pegs placed in two 30-second trials.

ii) Alternate: Subject faces dial-unit. At start signal, he sets, from left to right, the required settings on each dial and thus activates the record switch. Then, he immediately returns to the left-hand dial and repeats. Score is the number of accurately set dials in a 30-second period.

e) Time:

i) Recommended: About 2 minutes for each method

ii) Alternate: About 1 minute

f) Psychometric Characteristics: While reliability and validity measurements are not available, a recent report by Fleishman and Ellison [127] shows that the Purdue Pegboard, as herein proposed, has orthogonal loadings on a finger dexterity factor of 0.66 (both hands) and 0.60 (right hand) and no loadings greater than 0.20. These data were obtained for a sample of 760 Air Force airmen entering technical schools.

No data is available on the alternate technique.

II) Switching: Sequentially reaching and manipulating switches with precision.

a) Major variables:

i) Number of switches

ii) Number of switch positions

iii) Sequence of switching operations

iv) Type of switches; i.e., toggle, rotary, push-button

b) Recommended Technique: Same as alternate in I above.

c) Alternate Technique: Use of a panel of 10 momentary contact toggle switches arranged in two banks of five switches, each with 3 positions. Each switch is oriented vertically with reference to panel labeling, and the center position is the normal switch setting. Two lights are associated with each switch, one above and one below. The task is presented through light patterns which are extinguished through proper switch positioning. A starting position switch immediately in front of the subject provides a constant origin for each sequence of switching movements.

d) Presentation:

i) Recommended Technique: Same as alternate in I above.

ii) Alternate: After a starting signal, four lights are presented which the subject must extinguish by appropriate switch movement. Since the switches are all of the momentary contact-center-off type, the response (switch) panel is always ready for use. The lights may be turned off in any order, and the primary score is the elapsed time from presentation of the pattern to complete cancellation of the pattern. A secondary error score is obtained through a count of all inappropriate switch movements. Upon completion of a pattern, the subject returns hand to the starting position switch which activates the next pattern. This further provides a reaction time score; i.e., time from presentation of pattern until starting switch is released and the hand motion to the switch panel is initiated, as well as a pattern count during a 60-second behavior sample.

e) Time: 1 minute sample for both recommended and alternate procedures.

f) Psychometric Characteristics: Since these procedures represent modified work-samples, psychometric characteristics are not known; they must be experimentally determined.

III) Writing: Specifically, the quality and quantity of handwriting.

a) Major Variables:

i) Quality of performance

ii) Speed

b) Recommended Technique: Using a standard context, collect a 30-second handwriting sample.

c) Alternate: Collect samples from handwritten log entries or similar free-situation written material.

d) Presentation: Recommended Technique: Subject is asked to copy from a standard text as much as possible in a 30-second period. This performance is scored on both number of words in standard five-character letter groups and is rated against a set of standards as in the Ayres Handwriting Scale. The quality score is the number associated with the standard sample most nearly matched by the variable sample.

e) Time: presentation - 30 seconds.

f) Psychometric Characteristics: Reliability is unknown. Score range will probably be from 10 to 20 words (five letter groups), with the quality scale covering an assigned value range from 10 to 100.

IV) Digital Steadiness: The ability to hold an extended digit motionless; or the reverse, the involuntary movement of an extended digit.

a) Major variables:

i) Extent of arm support

ii) Diameter (or shape) of target

iii) Length of digit extension (probe)

iv) Diameter of probe

b) Recommended: A metallic three-hole target apparatus with target holes of 1/8", 1/4", and 3/8" diameters respectively, to be probed by a 1/16" diameter metal "digit-extension" of 8" length. The probe is affixed to the second finger of the preferred hand, the arm of which is held lightly in an arm-clamp. A counter and timer are used with, or are a part of, the equipment to yield counts of number of contacts between probe and target edge as well as cumulative time of contact.

c) Alternate: A metallic taper slit about 8" long with slit varying in width from 3/4" to 1/8", into which is to be inserted a 1/16" diameter probe of 8" length. Behind the slit is a 3/32" target which moves along the center line of the slit from the wide end to the narrow in 40 seconds. A counter and timer (as above) are provided.

d) Presentation:

i) Recommended: Subject, with arm in support, inserts probe in largest hole for 30 seconds, then in middle for 30 seconds, and finally in smallest hole for 30 seconds. Score is both number of contacts and timer in contact with each target separately. Time is to be recorded to nearest millisecond.

ii) Alternate: Probe is affixed to finger and inserted in wide end of slit, pointing to the target. Probe follows as target moves from wide to narrow end of slit at a rate of one inch per five seconds. Score is in terms of both number of contacts and cumulative time of contact of probe with side-wall. Time is to be recorded to nearest millisecond.

e) Time:

i) Recommended: About 2 minutes

ii) Alternate: About 1 minute

f) Psychometric Characteristics: Not known

C. REACTION TIME

I) Major Variables:

a) Type of stimulus

b) Type of response

c) Measurement technique

II) Simple:

a) Recommended:

i) Light stimulus - while an auditory stimulus will yield a shorter reaction time, there is no indication that either modality yields greater reliability of RT measurement.

a) Target circle of 2" diameter

b) Light intensity - about 12 ml

c) Light duration - 50 milliseconds (ms)

d) Surround illumination - very low to zero

e) Viewing distance - 13" (or instrument equivalent)

f) Viewing condition - binocular

ii) Response: Release of spring-loaded switch.

iii) Measurement Technique: A preliminary signal is used, probably a low intensity small light at a mean pre-stimulus time of 1.5 seconds. Actual stimulus is presented from 1 to 2 seconds after onset of alert light, with intervening time varying randomly. Time is measured and recorded in ms from onset of stimulus until reaction.

b) Alternate:

i) Light stimulus

a) Target: A panel bulb, probably 1/2" diameter

b) Intensity: Standard bulb intensity - about 12-20 ml

c) Duration: Light is "on" until response, which turns out light.

d) Surround: Normal panel illumination

e) Viewing distance and condition: Binocular - 12" - 18"

ii) Response: Release of spring-loaded switch

iii) Measurement Technique: Same as "Recommended"

c) Presentation: Subject is located appropriately with respect to the equipment and signals readiness to initiate stimulus series. Ten stimuli constitute each series with scores cumulated over the 10 trials.

Automatic presentation of stimuli and scoring of reaction times is desirable if feasible within equipment limitations.

d) Time: A series of 10 RT's should require less than 2 minutes.

e) Psychometric Characteristics: Reliability and Validity - not available, but in a study by Seashore[128], Visual Simple, Reaction had a factor loading of 0.64 on a Reaction Time factor, and no other significant loadings (N = 50). A similar test, Reaction Time to Light, has been reported by Thurstone [129] to have a loading of

0.73 on the Reaction Time factor (N was about 170). Both of these studies used oblique rotations.

III) Complex:

a) Recommended:

i) Light stimulus - three lights in an in-line configuration

a) Target - three one-inch diameter circles arranged in an in-line configuration with one-inch separating adjacent circles.

b) Intensity - 12 ml

c) Light duration - 50 ms

d) Surround illumination - very low to zero

e) Viewing distance - 13" or instrument equivalent

f) Viewing conditions - binocular

ii) Response: Release of spring-loaded switch.

iii) Measurement Technique: Two spring-loaded switches are depressed. If right-hand light comes on alone, right-hand switch is released; if left-hand light comes on alone, left-hand switch is released; if both lights come on, both switches are released. Thirty light configurations are presented randomly, requiring each response an equal number of times. Since each stimulus evokes a response, stimulus configurations are presented at times varying randomly from 1 to 2 seconds (with a mean of 1.5 seconds) after response to the previous configuration. Score is the time (in ms) for correct response to all 30 stimuli.

iv) Time: About 1 to 1-1/2 minutes.

b) Psychometric Characteristics: Reliability and validity coefficients are not available. In terms of factor structure French [130] reports the following median loadings for discrimination reaction time:

Number of Analyses in Which Factor Appeared	Factor Name	Median Factor Loading
7	Space Relations	0.39
4	Finger Dexterity	0.35
8	Perceptual Speed	0.25
2	Unidentified	0.25

Since a discrimination reaction time test does not demonstrate loadings on a reaction time factor, it is debatable whether a test of this category should be included.

D) TIME PERCEPTION

I) Definition of time perception: The ability to judge elapsed time under varying conditions of activity.

II) Major Variables:

a) Type of activity

b) Extent (density) of activity

III) Recommended Technique: The use of rhythmic and arhythmic activities during estimation of relatively short time periods (15 seconds) and relatively long time periods (60 seconds). The tasks to be used to "fill" the time period are: (1) tapping on a telegraph key at the fastest possible rate (rhythmic), and (2) counting the number of "E's" presented in a field of "F's".

IV) Alternate: The estimation of elapsed time during either an experimental procedure or during an operational task. The time involved should be between five and ten minutes. NOTE: All estimates of time, particularly in an operational setting, are extremely susceptible to experimental error through failure to eliminate operational time cues.

V) Presentation: For most efficient utilization of time, the estimation of long periods can run sequentially with the estimate of the shorter periods on the counting task. The tapping task, at maximum speed requires some rest period. The following schedule should, therefore, be used:

a) Tapping: 15-second estimation

b) Counting E's: 60-second estimation

c) Counting E's: 15-second estimation

d) Tapping: 60-second estimation

In the tapping tasks, subject indicates by verbal report when he feels the time has elapsed; in the counting tasks, subject presses a signal button to indicate his estimates.

To minimize the establishment of a time-per-line estimate in the counting task, the letters should be presented on a continuous tape.

VI) Time:

a) Recommended: 3 minutes

b) Alternate: 5 to 10 minutes

VII) Psychometric Characteristics: Not known. However, a recent study by Denner (130) reports a test-retest reliability of 0.93 with 42 subjects in tapping at a preferred rate. The use of a higher rate can be expected to lower this figure in some degree.

E) MENTAL ABILITIES

I) Number Facility -- facility in manipulating numbers in any form.

a) Major variables:

i) Type of numerical operation

ii) Format of Presentation

b. Recommended technique: A combined addition-subtraction task presented in horizontal array, composed of three sets of three-digit numbers. The first two sets are to be added, and the third set subtracted from the sum.

c. Alternate technique: A multiple choice subtraction and division test similar to the Air Force (World War II) Numerical Operations.

d) Presentation:

i) Recommended: A machine-presented task as a part of a general psychomotor performance testing system. Problems are presented via a programming console to a separate display panel. Answers are set in dials on the panel within a predetermined time period, and the responses are automatically scored.

ii) Alternate: This test may be presented in either of two ways.

a) as a printed test with alternate forms stocked as required for the mission duration, or

b) as a mechanically presented test on a simple testing-scoring device. Each problem is presented on a card and subject responds through pressing the button associated with the chosen answer. This yields an immediately scored test and offers economy of space and weight.

e) Time:

i) Recommended: Interposed in a series of other tests, with about 3 minutes devoted to numerical operations testing.

ii) Alternate: A 3-minute sample would suffice

f) Psychometric characteristics:

i) Recommended: Adams and Levine (131) report a reliability of 0.787 for this test, based on 15 subjects. A similar test in paper-pencil form is reported by Woodrow (132) to have a factor loading of 0.82 on a well defined numerical factor. The study was based on a sample of 110 college students and used orthogonal rotation. This test had no significant loadings on any other factor.

ii) Alternate: An Air Force report quoted by French (124) reports an alternate form reliability of 0.79 for an 80-item test, with a five-minute time limit. In six analyses the median loading on the Numerical factor was 0.78. Five of these were orthogonal rotations, and in the sixth, the Number factor turned out to be orthogonal for the remainder of the factors. In all cases, the test showed loadings only on the Numerical factor.

II) Memory: Short term and long term recall.

a) Major variables:

i) Nature of material.

ii) Criterion of learning

iii) Time between learning and recall.

b) Recommended Technique: Use of a paired-associates word list, using 10 pairs of simple four-letter words.

Initial learning is provided through four repetitions of the set with the within-set order changing from trial to trial. (133) Short term memory is measured by accuracy of recall on the fifth presentation, which is in the same order as the fourth presentation.

(c) Alternate technique: An adaptation of the Thurstone Work-Number test, using 20 word-number pairs. Subject learns the associations, through a 3-minute training period, and when presented with the words must write the associated number. (134)

(d) Presentation: As indicated in the technique description, long-term memory can be measured by modification to either of the above techniques to permit learning to two error-free repetitions. A relearning of two error-free repetitions should take place 24 hours after the initial learning. Thereafter, test sessions without knowledge of results occur no more frequently than one per week.

(e) Time: Learning: about 5 minutes
Testing: 2 minutes

(f) Psychometric Characteristics: Estimated reliability (split-half corrected for length) = 0.87, based on similarity to Garrett's analyses Ga B and Ga C as reported in French. (124) A median loading of 0.74 on a memory factor is reported with a secondary loading on a residual factor.

(g) Alternate: Of 8 analyses where the indicated type of tests was used, a median loading of 0.52 on a memory factor was reported, with an expected reliability of 0.80 to 0.91.

III) Monitoring: The perception of a critical aperiodic event in a matrix of similar but non-critical events.

a) Major variables:

i) The critical event or signal

ii) The critical event frequency

iii) The non-critical event space

b) Recommended technique: Use of a series of four meters with oscillating needles. A disturbance can be programmed into any of the meters, which results in a shift of the mean point of the oscillation of the selected meter. This detection task is imbedded in a matrix of six other tasks. Detection of shift is indicated by moving a switch associated with each meter in the direction of the shift. Both time for detection and failure to detect can be scored. This is a modification of the procedures used by Monty (135), in that a discrete motor response is required but no additional visual stimulus is involved.

c) Alternate technique: An auditory signal is presented in a regular cycle in which the signal is heard for about 0.1 second and is off for about 0.5 seconds. At predetermined times the off period is lengthened by 0.1 second, after which the regular cycle is resumed. This task is further imbedded in a set of 6 other tasks.

d) Presentation: Both of the above techniques can be presented as a part of the psychomotor performance testing system in which the subject is seated before the panel, responding to complex instructions and varying complexity of problems.

e) Time: In a total sample, only about one minute is required for the response to critical stimuli.

f) Psychometric Characteristics: Adams and Levine (131) report test retest reliabilities from 0.781 to 0.926, depending on score chosen.

IV) Attention: the active selection of, and emphasis on, one component of a complex experience.

a) Major variables:

i) Type of attention-getting stimuli
ii) Arrangement of stimuli
iii) Setting for "complex experience"

b) Recommended technique: An arrangement of five pairs of lights (one red, one green in each pair) is arranged around a rectangular panel including displays for other psychomotor measures. The green lights are normally on and the red lights are normally off. A switch is associated with each light. Times are cumulated for the time each color light is left in a non-normal state.

c) Alternate technique: On the same panel, four vertical displays are arranged centrally. There is a specified tolerance zone associated with each scale or display. When the indicator on any display moves outside the tolerance zone for that display, a toggle switch is to be activated. A time limit is established during which the out-of-tolerance condition is to be identified. Scores are expressed as the number of such states correctly identified.

d) Presentation: For both recommended and alternate techniques, stimuli are presented randomly while the

subject is either scanning the entire panel or actively engaged in one of the seven tasks.

e) Time: In a 15-minute complex behavior sample, only about 2 to 3 minutes will be required for the cumulative exposure to either of these techniques.

f) Psychometric characteristics: Adams and Levine (131) report a test-retest reliability of 0.567 for response time to red lights.

F) VISUAL PERCEPTION

I) Perception of rate of change of depth.

a) Major variables:

i) Object size

ii) Object distance

iii) Extent of differentiation of background

iv) Object brightness

v) Rate of movement

b) General Considerations: This is generally a rate-of-closure or a range-rate problem. As such, it is a determination of the distance at which an object of given size can be determined to be approaching the observer or departing from the observer. The immediate corollary is the determination of the rate at which the object is approaching. Since the space distances involved (for rendezvous, for example) are too great for research on a real-distance basis, some form of simulation is required.

c) Recommended Technique: Perceived change in size of a two-dimensional circular image is required. The results can be geometrically extrapolated to the class of sizes and distances appropriate to the

space rendezvous situation. For purposes of this study, a group of object sizes are postulated ranging from an image subtending 1' of visual angle to objects subtending 30', 1° and 10° of visual angle. Actual size changes may be accomplished through a calibrated optical system such as a "zoom" lens. Object brightness must be kept constant, even though the simulated conditions will depart from the real conditions since the brightness of a real object changes in accordance with inverse square law. This constant brightness is required to keep the problem one of perceived size, and not a problem of brightness difference thresholds. A compromise is desirable in which the brightness per unit of area would be kept constant. The background should be homogeneous, undifferentiated. This, again, is a departure from a real-life situation, in which an approaching object would be viewed against either a star background or an earth background but the departure is required for standardization of experimental conditions.

d) Alternate Technique: Again, using simulation techniques, a miniature situation requiring monocular vision can be used. Monocular vision is necessary to eliminate the binocular cues which are present in working at moderately close distances. In the miniature situation, the fixed rod of the Howard-Dolman apparatus is occluded by a baffle, and only the moveable rod is visible. The minimum rate of movement, or minimum distance moved by this rod to be perceived becomes the threshold. This value is then geometrically extrapolated to appropriate distances for the visual angle involved.

e) Presentation: Both techniques must be presented by the method of limits, the direction and rate of movement (size change) being controlled by the experimenter. The subject reports both the perception of motion and the direction of the perceived motion. Initially, 10 measures from each starting point must be taken in the approaching dimension, with the retreating object measures added to this number as so-called confusion trails. After relatively stable threshold figures are obtained, a smaller number of observations will suffice as essentially a monitoring function.

f) Time: Initially about 10 minutes per session will be required, which will be reduced when stable threshold values are obtained.

g) Psychometric characteristics: Not known

II) Form discrimination

a) Major variables:

i.) Specification of form

ii.) Discrimination situation

b) Recommended Technique: The primary concern with "form discrimination" is to preserve form perception under not only distracting, but partially concealing circumstances, and determine perceptual closure. Accordingly, a paper-and-pencil test is recommended, namely, the ETS Hidden Figures Test (134), an adaptation of the Gottschaldt Figures Test. This test requires, for each item, identification in a complex pattern of one of five geometrical figures.

c) Alternate Technique: An apparatus type test, involving projection of geometrical figures can be used, measuring the amount the image has emerged from complete blur towards sharp focus and clear contour. A calibrated focusing mechanism as used by Douglas (136) will permit quantification of lens position relative to the extremes of complete blur and sharp focus.

d) Presentation:

i) Recommended: A standard paper-and-pencil test is recommended, adapted for machine presentation through use of item cards and a multiple-choice button arrangement. By depressing the button associated with the chosen answer, an immediate recording of correctness of response is obtained, and the next card is presented. In such an arrangement, the score can also be cumulated to a total right score and total error score, if desired.

ii) Alternate: All presentations start from a completely blurred image and by motor drive or manual control, are smoothly brought into focus. As soon as the subject can identify the figure from a chart of comparison figures, he depresses a signal button and specifies his identification. The distance moved towards clarity of image is recorded as well as the accuracy of his identification. If the identification is in error, the incorrectly identified figure is repeated at a later time in the same session.

e) Time: Recommended and alternate: 10 minutes

f) Psychometric Characteristics: The recommended test has shown, in various analyses, loadings on a Visualization factor (3 studies, median loading .33), on a Space factor (4 studies, median loading .45) and variously on Gestalt Flexibility and Gestalt Perception factors with loadings from .29 to .40.

These obviously do not represent a pure test of a given factor, but a part of the difficulty arises from the test context in which the test was used.

G) MOTION DISCRIMINATION

I) Definition: Two aspects of motion discrimination define such performance: (1) detection of motion in various parts of the visual field, and (2) detection of change of motion.

II) Major elements:

a) Level of intensity
b) Position of the moving target in the visual field
c) Target-surround contrast ratio
d) Rate of target movement
e) Visual structure of reference background

III) Recommended: An adaptation to a Ferree-Rand perimeter which incorporates a self-contained geared-down motor driven belt on which stimulus objects can be presented at (1) controlled rates of motion, and (2) controlled position eccentric to the line of sight.

Light intensity should be adjustable from 0.1 ft L to 10 ft L, discrete steps from 10 ft L to 0.1 ft L. Measurements may be made at 0°, 15°, 30°, and 45° eccentric to the line of sight.

IV) Movement Rate: Target speed at viewing distance of 333 mm must be adjustable from a rate of 0.04 mm/sec to approximately 4 mm/sec. These rates correspond to speeds of about 22.5 sec of arc/sec and 37.6 min of arc/sec, respectively.

V) Target-Surround Contrast Ratio: The contrast ratio should be controlled by reflectance of target and surround. Target reflectance should be from 10 to 30 times the reflectance of the surround.

VI) Recommended Presentation: Following an adaptation period of five minutes to the background intensity level, targets will be presented at angles varying from 0° to 45° in a progressive increase of angle. Rates are adjusted by the method of limits from 0 to supra-threshold levels, noting the movement rate at time of reported detection of motion. This is followed by reversing the initial speed which is slowed until a report of no movement is given. Five determinations in each direction at each position should be made. Approximately 10 minutes should be allowed for each axis.

VII) Alternate: Translucent screen 20" square with 1/8" light on a rotating, motor-driven arm. Radius and rate of rotation are adjustable.

VIII) Presentation: Using the method of limits, with subject maintaining fixation on central target, peripheral light is started to move from the 0° position on the 0° - 180° axis. If motion is not detected within 15°, light is turned off, arm reset and again moved at higher rate. This is continued until motion is detected. By selecting appropriate radius and starting points, motion thresholds can be mapped throughout most of the visual field.

IX) Psychometric Characteristics: Unknown. This test represents a behavioral area which has received only laboratory consideration. No studies are known in which traditional psychometric parameters have been computed. While threshold values are, in most cases, mean values, unless otherwise indicated, there is no indication of the variance of the scores. Standardized test information in this area of performance is needed.

H) HETEROPHORIA

I) Definition: The tendency of the visual axes of the two eyes, when focused at optical infinity, to deviate from parallelism by excessive convergence, divergence, or hypervergence when there is no stimulus for fusion or when fusion of images presented to the eyes, separately, is prevented.

II) Requirements for Measurement of the Phorias:

a) Stereoscopic device to present separate images to the right and left eyes.

b) Control of the interpupillary distance of separation of the images presented to the eyes.

c) Equal illumination (about 12 ft C) of each field.

d) Controlled or measured primary fixation distance.

e) Scale for measurement of axis of fixation for each eye.

III) Recommended: Orthorater vision testing device such as the Bausch & Lomb Orthorater and the Orthorater phoria tests. The Orthorater is a stereoscopic type instrument presenting separate right and left eye images by means of transparencies using a common light source. Lens systems are used to provide fixation at near-point (13") and far-point (20') equivalents. Lateral phoria targets present a numbered row of dots to one eye and an arrow to the other. Vertical phoria targets present a horizontal dotted line to one eye and a series of "stair-steps" to the other.

This Orthorater test is an easily administered standard test for collection of data on the phorias. No highly trained technical personnel are required for test administration.

IV) Maddox Rod Test: The test apparatus consists of a glass rod, set in the center of an opaque disc. Where the rod is held in front of one eye, it converts the image of a light into a streak of light, and the measured position of this streak in relation to image of the light seen by the other eye shows the degree of heterophoria.

V) Psychometric Characteristics:

a) Reliability: The reliability of the Bausch & Lomb-type plates can be expected to be 0.70, whereas,

the Risley Prism Test, a variation of the Maddox Rod Test, is 0.76.

b) Validity: There has been difficulty in definition of an acceptable validity criterion, therefore, the validity may only be inferred from factorial structure. The approximate factorial structure is presented for this purpose.

Factor Name	Loadings: (n = 60) Far Point Test	Near Point Test
Vertical:	0.62	0.54
Vertical (Morning Test)	0.44	-
Orthorater, Near Vertical	-	0.69
Lateral:	0.87	0.56
Orthorater, Far Lateral	0.50	-
Near Lateral	-	0.66

Both far-point and near-point tests load on four factors, two associated with vertical phorias and two with lateral. Comparison of the vertical and lateral factor loadings appears to show that the Far Point Tests have higher loadings than the near-point tests. Thus, it would appear to be advantageous to examine the phorias using the Far Point Tests rather than the Near Point Tests, if near-point convergence is not of particular significance.

VI) Administration: Measures of vertical phorias are taken first, then lateral.

VII) Time: Approximately 20 seconds are required to obtain the two far-point phorias.

I) BRIGHTNESS CONTRAST

I) Definition: A phenomenal brightness change as a function of the brightness of the surround.

II) Major Variables:

a) Size or area of inducing field (surround)
b) Size or area of test patch
c) Intensity of inducing field
d) Intensity of test patch

III) Recommended Procedure and Equipment: Two round inducing fields, each about 4" in diameter, subtending (at 13") about 17°, surrounding circular test patches about 1" in diameter, subtending about 4° 25'. The test patches are of the same brightness (about 1 ml); the lighter inducing field should be about 10 ml and the darker inducing field about 0.1 ml. (Experience may change these values to 100 and 0.01 ml). The subject is required to adjust the apparent brightness of the test patch in the darker field by calibrated, continuously graduated neutral density wedges, until it appears equal in brightness to the test patch in the lighter field.

IV) Alternate: The alternate equipment will be similar to the above described equipment, but brightness of inducing fields may be changed in discrete steps, effectively doubling the brightness ratios to be examined. The same procedure; i.e., adjusting the brightness of the test patch to subjective equality, would be followed. As with other visual measures, a minimum of five determinations at each set of inducing field brightnesses should be made.

V) Estimated Time:

a) Recommended: Approximately 2 minutes
b) Alternate: Approximately 2 minutes

VI) Psychometric Characteristics: Unknown. This procedure may be very susceptible to learning; therefore, training to no improvement criterion may be necessary before data are taken.

J) ADAPTATION TO INTENSITY LEVELS

This can include both "dark-adaptation" and "light adaptation." Of the possible phenomena which could be encountered, the effect of adapting brightness on acuity is of primary interst. It may be appropriately titled "Glare Recovery." The procedure for testing used in developmental work leading to construction of the Army Night Vision Tester, (U.S. APRO Technical Research Note 40, Factor Analysis of Visual Acuity Tests During Dark Adaptation, November 1954), involves a pre-dark-adaptation time (about 5 minutes) followed by a light adaptation period using the Rose Preadaptometer set at the desired adapting illumination level. Testing of acuity and brightness discrimination are then conducted during the course of adaptation from the pre-adapted level to the determined test level.

	Recommended		Alternate	
Adapting Light Levels:	100 ft lamberts,	or 10 foot lamberts	100 ft L	or 10 ft L
Testing Levels:	0.01 ft l	0.001 ft L	0.01 ft L	0.001 ft L
Test Target:	Modified Landolt C		Chevrons (brightness-discriminating)	

I) Reliability: (Based on low photopic-level-adaptation studies, reliability is a function of length of adaptation time.)

0.65 to 0.72	0.55 to 0.27
(1 to 5 min.)	(1 to 5 min.)

II) Factor Structure: Modified Landolt Ring

During the course of photopic adaptation, the modified Landolt ring has its primary loadings on a "Cone-Adapted Resolution Factor" with the clearest loadings on the 3 and 5 minute adaptation times (0.85 and 0.81). At an adaptation time of one minute, there is a predominant resolution

factor (both rod and cone adapted) and very small loadings (0.21 and 0.27) on a cognitive factor and a perceptual speed factor. At both 3 and 5 minutes the resolution loading is entirely cone-adapted, and the cognitive and perceptual speed factors have shifted to "Form Perception." At the 3-to-5 minute adaptation times about 68% of the variance is accounted for by the cone-adapted resolution factor and about 15% by the form perception.

III) Chevrons: These targets show much less saturation on a Resolution (cone-adapted) factor with only about 31% of the variance associated with this factor. As expected there is about 23% of the variance explained by a Brightness-Discrimination factor, with lesser amounts associated with Form Perception (negative loadings) and with Perceptual Speed.

IV) Validity: As a predictor of resolution during the course of recovery from an adapting source, the modified Landolt ring will show good validity, particularly for 3 to 5 minute recovery periods. The Chevrons will be considerably less effective for pure resolution, since they also measure brightness discrimination.

V) Administration: Administration procedures should follow the Army pattern, using a pre-dark adaptation period of about 5 minutes to establish a common base line. Following the base-exposure, adaptation to the higher intensity is provided for at least five minutes. Immediately thereafter, sequential measures of resolution are taken at one minute intervals for a five minute period.

VI) Anticipated Time: Total test time - about 15 minutes per man.

K) BINOCULAR RIVALRY

I) Definition: The alternation of images when opposing stimuli are presented to the right and left eye separately, but simultaneously.

II) Major Variables:

a) Area of stimulus targets

b) Illumination level

c) Degree of difference of R and L stimuli

d) Contour sharpness

e) Visual area stimulated (foveal eccentricity)

III) Recommended: Binocular transilluminated slides of the Orthorater type are used, each stimulus object composed of black and white bars of equal width oriented diagonally within the square frame, utilizing the entire frame area. The right eye view is rotated 90° from the orientation of the left eye view. Standard Orthorater illumination level is employed.

IV) Alternate: Since this is a binocular phenomenon requiring the patterned stimulation to one eye to contrast strongly with the stimulation to the other, a variety of binocular viewing is essential, with separate, contrasting patterns for each eye. Thus, an alternate procedure must still utilize binocularity. Such a procedure incorporates the diagonal and opposed stimulus patterns permanently affixed to a panel or internal bulkhead and separated by a retractable or hinged septum. In use the septum is extended to provide a standard viewing distance, and separation of the two visual targets.

V) Presentation: Subject seated at binocular viewing device depresses button to record the time in which right-eye view is dominant during a two-minute viewing period. The timer should be constructed to yield two scores as follows:

a) Number of times right-eye view is reported as dominant.

b) Total time of right-eye dominance.

VI) Administration Time: 2 minutes

VII) Psychometric Characteristics: Not available

a) Score Range: 10-25 cycles per minute

b) Expected Mean: 19 cpm

L) DEPTH PERCEPTION

I) Major Variables:

a) Illumination level

b) Type of target (stereoscopic or "real-depth")

c) Viewing time

II) Recommended: Use of transilluminated stereoscopic slides such as in the Bausch & Lomb Orthorater. These slides provide a graded series of stereo decentrations in a standard format. Several equivalent forms of the existing type of test will be required, with certification of manufacturing precision to insure accuracy of depth threshold measurements. Illumination level should be 1 ml with no restriction on viewing time.

III) Alternate: A modified Howard-Dolman apparatus, using a motor drive for moving the variable rod. Illumination should be about 1 ml with viewing distance at 6 meters or an optical equivalent.

IV) Presentation: With the recommended technique, subject, while taking other visual function tests, reads off the number in each line which appears to stand out ahead of the rest of the line. He is scored on the last line read correctly. Conversion tables are available to translate the line read into seconds of arc decentration as the depth threshold value.

In the alternate technique, the subject, through use of the control buttons, moves the variable rod backward or forward until it is seen as being at the same distance as the standard or fixed rod. The method of limits is thus used, starting with a given separation, the variable is moved towards the standard until a match is reported without changing the direction of movement. The linear separation of the two is recorded, and the variable is moved away from the standard in the opposite direction from the original starting point. Subject again seeks a match, moving the variable in one direction only. Five cycles of these settings are required.

V) Time:

a) Recommended - 30 seconds to 1 minute

b) Alternate - about five minutes.

VI) Psychometric Characteristics: Not known.

M) COLOR VISION

I) Definition: The differential perception of hue.

II) Major Variables:

a) Controlled variation of hue

b) Controlled intensity

c) Standard viewing situation

d) Spectral vs reflected target

III) Recommended: A comparison spectrometer (monochrometer) to present a given spectral line and measure accuracy of comparison.

IV) Alternate: A colorimeter to match a light spot by combination of hues, at an intensity of about 10 ml for the unknown combination; a standard viewing position (using an artificial pupil) is necessary.

NOTE: The recommended procedure may turn out to be a part of the standardization (for calibration) procedure for on-board scientific equipment.

V) Presentation: Subject is presented with a standard "hue," a test patch, and a means of making a comparison by the method of adjustment. The hue of the comparison patch is adjusted to a point of subjective equality and the value, either in wavelength or an analog, is recorded. At least three spots in the visible spectrum should be sampled, probably about 450 mμ (blue), 550 mμ (green) and 600-620 mμ (red). After each adjustment for a given standard hue, the comparison is displaced systematically and the measure repeated. Five measures or matches of each hue should be obtained.

VI) Estimated Time: 2 to 3 minutes with comparison spectrometer.

VII) Psychometric Characteristics: Undetermined

N) VISUAL FIELD

I) Definition: The visual field may be defined as a detection field in which the presence of an object can be detected or an identification field in which an object can be identified. The detection field is generally taken as the test range for examination of visual fields.

II) Major Variables:

a) A target on an arc of a sphere at a fixed radius, position on the arc adjustable.

b) Target size and shape

c) Illumination level

d) A constant fixation point

III) Recommended: A clinical perimeter or its equivalent, using mirror fixation and 2° circular target on a wand at 333 mm radius and 10 ml illumination.

IV) Presentation: Determinations should be made using both eyes on the 0° - 180° arc, 45° - 225° arc, and 90° - 270° arc, using the method of limits. The test object is slowly brought into the field of view until its presence is reported. The position at time of detection is noted, in degrees eccentric from fixation axis, and then the object is moved about 10° - 15° farther into the visual field. Then it is slowly moved out from the center of the field, noting the position when it is reported to have disappeared from view.

V) Reduced Presentation Technique: After mapping of major axes has been repeated often enough, each subject's variance, on each direction of object movement separately will be known, thereafter, check mapping may be used for most measures. Then one reading on each axis may be obtained, with the test object being moved into the field of vision.

VI) Presentation Time: Complete technique - 15 to 20 minutes
Spot or check - mapping - 4 to 5 minutes

VII) Psychometric Characteristics: Not available

VIII) Alternate: Translucent screen 20" square with 1/8" light on a rotating motor driven arm. Rate and radius of rotation are adjustable.

IX) Presentation Technique: Subject is seated 13" from screen, watching monocularly a central fixation spot. The light sweeps a fixed radius circle (8-3/8" or 33° radius) at 12°/second around the fixation point. Subject depresses a signal button whenever light disappears, releasing button when light reappears. Angular position of light is recorded with respect to a time base. A second recording shows the position of the light while button is depressed.

X) Presentation Time: 2-1/2 minutes for five successive measures for one eye.

XI) Psychometric Characteristics: Unknown

O) AUDITORY

This section involves measurement of the following:

I) Pitch discrimination. The ability to discriminate between two successively presented tones; the smallest frequency difference identified as different in sequential presentation.

II) Loudness thresholds. The physical intensity necessary for a tone of given pitch to be heard a designated proportion of the time.

Equipment requirements are for a device which will permit sequential presentation of two different tones, one of which is adjustable by the test subject, and both of which are precisely calibrated and equated in intensity. The equipment ought to permit sampling of the frequency range from about 30 cps to 21,000 cps with calibrated control of intensity at each selected frequency, and should include provision for timing of tone presentations.

P) PITCH DISCRIMINATION

I) Major Variables:

a) Frequency
b) Intensity level
c) Standard frequency
d) Range of comparison frequencies
e) Inter-stimulus interval

II) Recommended:

a) Intensity - 40 db
b) Time between stimuli - 2 seconds
c) Frequency, standard - 500 cps
d) Comparison range - 485 - 515 cps
e) Discrimination level - 75% accuracy

III) Presentation:

a) Recommended: Modified methods of limits with greater concentration of comparison in region of shifting response. Subject responds by signal if second tone is perceived as different from the first. Both standard (first) and comparison (second) tones are presented for about 1.5 seconds and are separated by one second. From 3 - 4 seconds separate pairs of tones. Estimated Time: 4 to 5 minutes.

b) Alternate: Constant-process method, 10 comparisons at each point. Estimated Time: About 40 minutes (by using 5 comparisons at each point the time reduces to 20 minutes).

IV) Psychometric Characteristics: Not known.

V) Loudness Thresholds:

a) Major Variables:

i) Specific frequencies

ii) Variable intensity level

VI) Presentation: Method of limits(*) - at each selected frequency of 30, 100, 400, 1,000, 2,000, 4,000, 10,000, 15,000 and 21,000 cps, increase intensity continuously until a response of detection is elicited, then decrease until no tone is heard. Subject is instructed to press the "detection button" when he hears the tone and keep it depressed as long as he hears it. Estimated Time: 4 to 7 minutes.

(*) NOTE: This procedure is based on the availability of a unit similar to a Gray Audiometer where the selection of frequencies and change of intensity is essentially programmed. Where subject indicates that he hears a tone, the intensity starts to decrease until he no longer indicates detection. Then intensity increases again until a response is elicited.

VII) Psychometric Characteristics: Not known.

I. PSYCHOLOGICAL EQUIPMENT LISTINGS

The psychological measurements described will require certain pieces of equipment. An equipment listing complete with volume, weight, and power estimates is presented in Table 28 . It should be mentioned that the estimates are based on "off-the-shelf-hardware". With proper miniaturization, considerable reduction of up to 300% in power, weight, and volume could be achieved. To date, no requirement has existed for such a miniaturization of psychological test equipment. This has not been the case, however, for the biomedical measurements where considerable activity has gone on in miniaturization.

J. MISSION SAFETY MEASUREMENTS

1. Introduction

The necessity for assuring the viability and integrity of the crew members, independent of any experimental program, results in a category of mission safety measurements. They should assess both biomedical and human factors performance.

2. Mission Safety Biomedical Measurements

The mission safety biomedical measurements include: (1) heart rate and rhythm, (2) blood pressure, (3) respiration rate and depth, (4) body temperature, and (5) body mass.

These measurements will be obtained daily as part of the general provocative test program.

Time Estimates for instrumenting the subject are: (1) items 1-4, 10 minutes, and (2) Item 5; 5 minutes, for a total of 15 minutes. Calibrating, balancing and adjusting the instrumentation should require 5 minutes.

Data Acquisition Time for the mission safety measurements can be considered basically under three options:

	Option 1	Option 2	Option 3
Baseline Data	3 minutes	2 minutes	2 minutes
Cardiopulmonary provocative test		2 minutes	2 minutes
Recovery from provocative test		2 minutes	2 minutes
Total Taped Data	3 minutes	6 minutes	6 minutes
Interval Time	2 minutes	5 minutes	7 minutes
TOTAL	5 minutes	11 minutes	13 minutes

The nature of these options are as follows:

1) Option 1: No cardiopulmonary provocation to the subject; only baseline zero G data

2) Option 2: Cardiopulmonary provocative test
   a) Flack Test at 40 mm Hg for 15 seconds
   b) Exercise
   c) Load cell dynamometer ergometer

3) Option 3: Cardiopulmonary Provocative Test
   a) Flack Test at 40 mm Hg for 15 seconds
   b) Exercise
      Dynamometer
      Ergometer
   c) Centrifugation
   d) Rotation

Total time per subject per assessment is as follows: (1) Option 1, 25 minutes; Option 2, 30 minutes; Option 3, 55 minutes for 30 minute centrifugation.

For missions of greater than one month's duration, a urinalysis should be done weekly. This will include the following: (1) osmolarity, (2) glucose, (3) proteins, (4) acetone, (5) bile, (6) pH, and (7) microscopic analysis.

Time estimates for these measurements are:

1) 15 minutes for items 1-7 on one sample
2) 45 minutes for 4 samples
3) 75 minutes for 8 samples

Hematologic analysis are also to be done weekly on missions greater than one month duration. The measurements are: (1) hemoglobin, (2) hematocrit, (3) leukocyte count, and (4) differential count and morphology. Time estimates for these measurements are 20 minutes for each sample.

3. Mission Safety Human Factors Measurements

The mission safety human factors measurements include an evaluation of higher mental processes, judgment, and a minimum re-entry simulation performance to test sensory and motor function.

a. Judgment

The recommended technique for making a critical evaluation of a person's judgment involves the use of rating scales, which inventory the frequency of appearance of some degree of judgmental behavior. The scales start with a global measure, a general evaluation of the frequency with which good judgment has been demonstrated during a stated recent period, and are followed by specific scales on judgments in designated activity areas. A second set of scales evaluates poor judgment in the same activity areas.

An alternate technique may use a specific checklist of judgmental behaviors covering the range of decision areas normally expected to be encountered. This checklist can be either a self-description instrument or a peer-evaluating device.

Evaluations of judgment will probably be made no more often than once a week, but may be at longer intervals. The rating scales or checklist should be completed by each man on each other man at regular intervals, and should be sealed upon completion. Data may be ferried back to Earth. 15 to 20 minutes will be required for either the rating scales or the checklist.

b. Simulated Re-entry Training

Simulated re-entry training may be accomplished during daily sessions as "operational readiness training for re-entry." It must be recognized, however, that this performance evaluation, although adequate for the objective to

be achieved, would be based on relatively short, overlearned behavior as compared with evaluations which might be made with standard testing systems. The proposed testing system would provide gross assessments of sensory, motor, and mental performance.

(1) The Task

Maintain attitude against random appearing disturbance and effect computed changes in translational rate at specified retro-fire times while holding computed attitudes. Thereafter, maintain pre-programmed and/or computed attitudes against aerodynamic disturbance. To provide the means for measurement, use of existing spacecraft tracking and sensing systems (when not otherwise used) is required; i.e., circuitry would be necessary to provide simulations with inputs and outputs integrated by on-board computer, actual command and control of the space vehicle not to be energized.

(2) Display

(a) Attitude

Integrated three-axis ball attitude position display and three-axis needles for attitude rate display required. The position display resolution should be to the nearest five degrees.

(b) Translation

A computed digital rate increment display in compensatory mode required. Only one dimension of information because of the three-axis attitude capability would be necessary.

(3) Controls

(a) Attitude

Integrated three-axis finger-type joystick attitude control.

(b) Translation

Single-axis lever translation control.

(4) Test Data

RMS error during the work sample would be required. Time instant to initiate re-entry from step impulse signal would be measured.

(5) Testing Time

As desired from 5 to 20 minutes, but 5 to 10 minutes is recommended.

4. Schedule of Testing

At least one month prior to space flight, all astronauts would be required to perform a 5-10 minute simulated re-entry task, once a day. The RMS error and time duration between instant for initiation of retro-fire for re-entry would be recorded for each astronaut. In orbit, each astronaut would perform the same task as on Earth, once a day, with the same measurements recorded as on the ground. In actual re-entry, only the pilot would perform re-entry and his performance would be recorded. After return to Earth, a similar record of simulated re-entry performance would be made. Comparisons would be possible between the three (or four, in the case of the pilot) performances, made over the pre-, orbital (re-entry), and post-flight conditions.

TABLE 28. EQUIPMENT LISTINGS AND
VOLUME, DIMENSIONS, POWER, AND WEIGHT ESTIMATES
BASED PRIMARILY ON "OFF-THE-SHELF-EQUIPMENT"

NOTE: Where equipment can be used in for more than one measure volume, dimensions and weight are only listed once, usually for first appearance. The data for the alternate is not repeated if same or similar to the recommended.

		Recommended					Alternate				
Class 1 Response or Attribute	Measure	Equipment	Volume (cu ft)	Dimensions (inches)	Power (Watts)	Wt (lbs)	Equipment	Volume (cu ft)	Dimensions (inches)	Power (watts)	Wt (lbs)
a. Sensitivity to spatial and temporal inhomogenities	Acuity	Bausch & Lomb Orthorater Glass slides/dozen	2.29 0.17	10x18x22 2.5x8x15	50	25	Same				
	CFF	Modulated Glow Tube Type CFF Equipment	0.69	8x10x15	20	20	Same				
b. Vestibular organ responses and discriminations	Linear accel. threshold	"Carriage" Rails (Collapsed for storage)	1.5	18x36x4	1	25	None				
	Angular accel threshold	Barany Chair (collapsed) or possibly exercise chair with head rest	2	4x18x48	1	25	None				
c. Kinesthesis thresholds	Position passive	Stylus, Template Timer, Counter	0.005 0.04 0.01	2x4x1 4x4x4 2x2x3	 1 0.33	0.5 3 1	(Barany Chair)				
	Active	Button Panel Timer	0.09 -	8x10x2 -	0.5 1	2 -	None				
	Rate Passive	Torus, Probe, Circuitry, Recorder	0.39	6x6x2	0.5	1	None				
	Active	Same as above					2 Photocell Units & Timer	0.02	2x4x4	10	0.5
d. Vestibularly produced illusions of orientation	Oculogravic Occulogyral										
e. Orientation		Barany Chair and light Timer			20 1		 Same				
f. Weight or mass discrimination		Weights and magnetic table	0.32	15x6x6		36	Same				
g. Gross motor coordination	Ambulation	Timer, rating scale			1		Same				
	Pressure suit donning and doffing	Timer pressure transducer			1 1		Same Same				
	Ballistic aiming	Rugged rotary pursuit device and counter	0.50	12x12x6	1	5	5 handholds & 5 grip switches & timer	0.02	4x2x4	0.5	2
	Large item manipulation	Timer			1		Torque Wrench (possibly on board equip)	0.07	2x4x14		2.75
h. Judgment		No equipment					Same				
i. Ideation		No equipment					Same				

Revised 3 January 1964

TABLE 28. EQUIPMENT LISTINGS AND VOLUME, DIMENSIONS, POWER, AND WEIGHT ESTIMATES BASED PRIMARILY ON "OFF-THE-SHELF-EQUIPMENT" (cont'd)

		Recommended					Alternate				
Class 2 Response or Attribute	Measure	Equipment	Volume	Dimensions	Power	Wt	Equipment	Volume (cu ft)	Dimensions (inches	Power (watts)	Wt (lbs)
a. Sensitivity to brightness		Polymetric Co. Brightness Comparator Model V-0659	1.16	10x10x20	100	20	Same				
b. Sensitivity to color		Comparison monochrometer	0.46	8x10x10	25	20	Semi Portable Filter colorimeter (designed by W. O. Wright)	0.75	8x8x20	100	20
c. Ability to coordinate visual axes	Heterophoria	Orthorater slides	0.03	2.5x8x2.5	50	.33	Maddox Rod Test Equip	0.04	3x8x1/4	10	0.25
d. Ability to adapt to intensity level		Orthorater and Rose Pre-adaptometer	1		100	5	Same				
e. Visual field		Clinical Perimeter (Ferree-Rand Bausch and Lomb) (assume aluminum construction)	6.62	14x24x34	75	20	Transluscent screen with rotating light	0.75	20x20x3	20	7
f. Auditory attributes	Pitch difference thresholds Loudness thresholds	Audiometer Programmed audiometer	0.74	8x10x16	40	15	Same Same				
g. Depth perception (range)		Orthorater slides	0.02	2.5x8x 1.25		2	Howard-Dolman Apparatus	0.5	6x8x36		15
h. Rate of change of depth perception (range rate)		Zoom lens 4 objects	0.04	2x4x8		5	Howard-Dolman Apparatus				
i. Form discrimination		Automatic card presentation and response scoring device. Random No. device. Cards (500)	0.23 0.06	7x7x8 3x4x8	10 10	10	Microfilm Projector Random No. device Microfiche Transparencies (2)	0.25	5x8x10	75	5
j. Motion discrimination threshold	Absolute	Clinic il perimeter and motor driven belt	.01	2x2x4	2	0.5	Translucent screen with rotating light			20	
k. Binocular Rivalry		Orthorater, 1 slide, counter, timer button					Hand held stereoptican, counter, timer, button	0.02 0.05	2x2x8	 1.3	0.5 4
l. Time Perception		Telegraph key, tape loop display, clock	0.5	6x12x12	2	2	Clock	0.01	2x2x4	2	1

TABLE 28. EQUIPMENT LISTINGS AND VOLUME, DIMENSIONS, POWER, AND WEIGHT ESTIMATES BASED PRIMARILY ON "OFF-THE-SHELF-EQUIPMENT" (cont'd)

		Recommended					Alternate				
Class 2 Response or Attribute	Measure	Equipment	Volume (cu ft)	Dimensions (inches)	Power (watts)	Wt (lbs)	Equipment	Volume (cu ft)	Dimensions (inches)	Power (watts)	Wt (lbs)
m. Tracking		Analog computer, Modified PPTS	2	12x12x24	10	20	Extra attitude control fuel				
n. Reaction Time	Simple	Display, programmer, response button	0.04	4x4x4	5	3	Same				
	Complex	Same as above					Same				
o. Fine motor coordination	Small item manipulation	Modified Purdue Pegboard	0.03	1x3x18		1	Dial Panel	0.02	2x4x8	2	2
	Switching	Dial Panel	0.08	4x4x8	2	5	Toggle Switch Panel	0.02	2x4x8	2	2
	Writing	Writing material/ream	0.18	2x8.5x11		16	Same				
	Digital Steadiness	Stylus and probe, arm clamp counter, timer	0.03	2x3x8		0.5	Metalic taper slit, motor driven target, stylus	0.025	2x2x10	5	2
p. Number facility		Part of Psychomotor Performance Testing System(PPTS)	2		300	55	Card display & response equip. cards (500)	0.23 0.05	7x7x8 3x4x8	10	10
q. Memory		Paper - pencil					Same				
r. Monitoring		Part of PPTS					Same				
s. Attention		Part of PPTS					Same				
t. Affect		Paper forms/ream	0.18	8.5x11x2		16	Similar				
u. Activity		Paper forms/ream					Similar				
v. Social Behavior		Paper forms/ream					Similar				
w. Irritable-Unruffled		Paper forms/ream					Similar				
x. Hostile-Amiable		Paper forms/ream					Similar				
y. Boastful-Modest		Paper forms/ream					Similar				
z. Friction-Harmony		Paper forms/ream					Similar				
AA. Inclusion-Exclusion		Paper forms/ream					Similar				
TOTALS for 1 Ratings			6.005		Peak Power 50	145.5	Recommended Except where alternates are provided	5.075		Peak Power 50	145.75
TOTALS for 2 Ratings			15.4		Peak Power 300	216.33	provided (does not include extra attitude control fuel)	5.795		Peak Power 300	158.75

Revised 3 January 1964

SECTION V

EXPERIMENTAL PROGRAM

The primary purpose of the BIOSTAT study is to determine the biomedical and human factor measurements which must be made of man to establish his ability to survive and perform satisfactorily in the space environment. Given the measurements which have been provided in the preceding section, the aim of the experimental program is to provide a systematic plan for investigation of the effects of the space environment on the crew.

The means by which the experimental program can meet this objective are as follows:

1) Determine whether man can survive and perform in space for prolonged durations.

2) Define the physiological and psychological performance problems presented by the space environment.

3) Investigate the extent to which artificial g and other measures can be used to counteract the physiological and psychological effects of the space environment.

4) Define a program to predict and control the undesirable effects of the space environment.

Eight environmental factors have been considered with respect to their effects on human performance. Any one of these factors may negatively affect performance, and for each of them a conditioning or counteracting alternative might be possible to null the undesired degradation in performance. Since the primary focus of the present study is on the effect of weightlessness on performance, the research design will center on this factor. However, it can also be taken as a didactive procedure, applicable to the other factors.

Although the effects of weightlessness over prolonged durations on human performance are unknown, there is indication that weightlessness may negatively affect human performance. Exercise and/or artificial g by centrifuge or rotation have been proposed to condition or counteract the effects of exposure to the space environment. A requirement for a rotating space vehicle would impose major design penalties on interplanetary space vehicles with current concepts. An intermittent centrifugation would impose relatively minor design requirements on an interplanetary space vehicle. Therefore, it appears advantageous to study weightlessness, then periodic g simulation with a centrifuge, and finally, if necessary, continuous artificial g in a rotating space station. To provide all three conditions in a single experimental space station design requires a rotating station with a centrifuge in a large zero g hub. It is necessary to determine whether a single exposure to artificial g over a given duration or a number of intervals of artificial g administered at specific separate periods over days or weeks would be beneficial. A zero g station could have a centrifuge installed to provide intermittent exposure to artificial gravity as desired, within reasonable constraints of weight, power, and volume.

For spin-up times shorter than ten minutes, and for g simulations above 1 g, the weight penalties (expendables) become large. In addition, the physiological limits of high rpm rotation on a short centrifuge radii are not fully known. The head would have to remain in one position to avoid severe coriolis effects and the effects of such restriction should be studied.

Aboard rotating space vehicles, various degrees of continuous artificial gravity could be produced primarily as a function of rpm and radius from the center of rotation. A large zero g hub facility would permit the simultaneous investigations of weightlessness and rotation. Unless there is a centrifuge in the zero g hub, it appears that re-entry g simulation would not be practically obtained with rotation of the station.

The data collected per mission will be constrained by (1) the number of crew members; (2) the logistics of the space station program, i.e., the capacity of the space station, the re-supply schedule, and the number of men who could be rotated

on each re-supply mission; (3) the types of crew members required; (4) the time allocated per man aboard the space station for biomedical and human factors studies.

Recognizing the variation in precision and response generally characteristic of biomedical and psychological test data, it is important to have adequate sampling to assure reasonable stability. Comparisons can then be made with a known degree of confidence between baseline (Earth) and space station performance. However, reasonable economic, operational, and scheduling restrictions on the numbers of subjects who will serve as crew members in manned space flight are also pertinent considerations to be accommodated in study planning. Therefore the best strategy appears to be the specification of a minimal sample number large enough to provide a satisfactory degree of data stability. This will be reflected in reasonable confidence that observed differences between space-based and earth-based physiological and psychological performance are significant. A minimum probability level of 0.05 or less that a wrong conclusion may be drawn and a 0.95 probability that a correct conclusion can be drawn from the data seems mandatory for such major decisions as whether interplanatary vehicles require rotation.

Figure 10 shows for given numbers of subjects the t value required to provide a probability (P) of 0.95 (or 0.05) where

$$T = \frac{\text{observed derivation from expected value}}{\text{standard error of the expected value}} \times \text{Adjustment for sample size}$$

Clearly, for small samples, the greatest drop in t is gained by going from 2 or 4 to 6 cases. This indicates a significantly increased stability of estimate with just two more cases, as compared with samples of 4. Also, the t value does not differ by large amounts from the t's for n's of 8, 10 or 12 cases and it approaches the t for n = 30.

Thus, n = 6 appears to provide an optimum stability (137) and confidence for a minimal investigation of vehicles, men, money, and time.

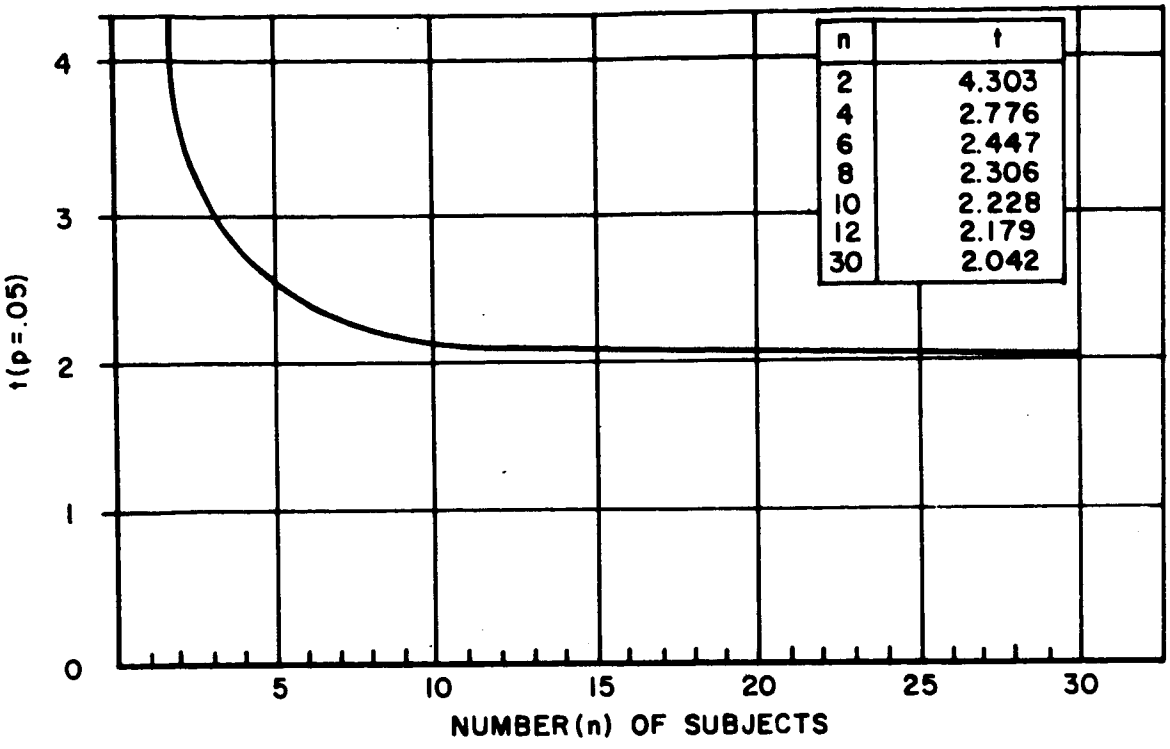

Figure 10. Relationship of Subjects to t Values

The types of skills required in space stations will, of course, be a function of the objectives of the mission. On the basis of studies made on space station duties and the Biostat objectives the crew complements specified for the various vehicles are indicated in the following list. A high degree of cross-training is assumed. (e.g. MD/pilot pilot/engineer, etc.)

Crew Size	Recommended	Acceptable
2-Man		
	1. Pilot 2. Physician	1. Pilot 2. Medical Observer
3-Man		
	1. Pilot 2. Navigator/Engineer 3. Physician	Same as recommended
4-Man		
	1. Pilot 2. Pilot/Engineer 3. Physician 4. Astrophysicist	Same as recommended

Crew Size	Recommended	Acceptable
6-Man		
	1. Pilot	Same as recommended
	2. Pilot/Engineer	
	3. Physician	
	4. Biological Scientist	
	5. Astrophysicist	
	6. Maintenance Engineer	
12 Man		
	1. Pilot	1. Pilot
	2. Pilot	2. Pilot
	3. Pilot	3. Pilot
	4. Pilot	4. Pilot
	5. Navigator/Engineer	5. Navigator/Engineer
	6. Navigator/Engineer	6. Navigator/Engineer
	7. Physician	7. Physician
	8. Physician	8. Biologist/Med. Observer
	9. Astrophysicist	9. Astrophysicist
	10. Maintenance Engineer	10. Maintenance Engineer
	11. Specialist	11. Specialist
	12. Specialist	12. Specialist
24-Man		
	1. Pilot	
	2. Pilot	
	3. Pilot	
	4. Pilot	
	5. Navigator/Engineer	
	6. Navigator/Engineer	
	7. Navigator/Engineer	
	8. Navigator/Engineer	
	9. Physician	
	10. Physician	
	11. Physician	
	12. Specialist	
	13. Maintenance Engineer	
	14. Maintenance Engineer	
	15. Astrophysicist	
	16. Astrophysicist	
	17. Data Management Engineer	
	18. Mathematician	
	19-24. Specialists as Required	

The crew characteristics to be allocated against the projected missions will be affected by the missions and requirement for escape capability at all times. Focusing on vehicle operation and experimental objectives, it is clear that 2- and

3-man vehicles will require a pilot and at least a medical observer, although it would be desirable to have a physician aboard. The 4-man vehicle would have at least one pilot and, more likely, two pilots plus a physician, since this could permit more equipment and procedures requiring a physician.

The 6-man vehicle should have at least two pilots, at least one physician and a biological scientist.

The 12- and 24-man vehicles must have four pilots, of which several would be to accommodate reserve or safety factors (assuming 12-man shuttles). The vehicles should also have three physicians onboard, on the basis that three 8-hour shifts would be possible and that data could be collected at all times in space.

The ability to collect data on biomedical and psychological performance will depend on the time available after essential station functions have been performed. A priority schedule must exist in which needs for sleep, rest, eating, personal hygiene, recreation, essential vehicle operations and maintenance, and critical collection of scientific data must be satisfied. Consideration of work/rest cycles, estimates of time required for operations, maintenance and collection of biomedical and psychological performance data is also necessary.

Systematically surveyed information on crew work/rest schedules (Ray, Martin and Alliusi, (138) suggests that human performance is a function of man's adaptation to a 24-hour day. Changes to other than 24-hour day cycles seem to cause significant changes in physiological rhythms over time, but complete adaptation occurs slowly over prolonged durations.

Studies for as long as a week appear to show that as long as the work/rest ratios in the work/rest cycle remain fixed, performance does not vary significantly, except that passive activities such as vigilance tasks show some decrement.

Various combinations of work and rest have been tried. For example, Adams and Chiles (139) showed that personnel assigned work/rest cycles of 2-2, 4-4, 6-6, and 8-8 did not differ significantly in work performance over a 96-hour period. The authors seemed to think, however, that the 2- and 4-hour cycles were more favorable for subject adjustment than the 6- and 8-hour cycles.

On the basis of the literature, it may be concluded on a conservative basis that work/rest schedules which take into consideration adaptation to a 24-hour day and man's normal habits of work and rest will probably work with the least trouble. If it is necessary to have other duration work/rest cycles, they could be instituted, but they are untried over prolonged durations. Eight hours of sleep in every twenty-four hours is anticipated as a requirement for each crew member.

For allocation of crew time against required activities in a 3-man, a 6-man, and a 12-man space station for a 24-hour day, it is assumed that all men will sleep eight hours, and rest, eat, and engage in recreational activities for up to six hours a day. They would be available for about four to eight hours to operate and maintain the vehicle. This would leave the remaining time for work as an observer, experimenter, or subject in the collection of the experimental data.

Figure 11 shows an estimate of time available per man and total time available per crew on the basis of crew size. As crew size increases, less time per man is required for station operations and maintenance and more time would be free for collecting critical biomedical and psychological data. It is likely that time available for data collection would range from two hours aboard a 2-man vehicle to a maximum of six hours per man aboard a 24-man station.

On the basis of estimates of time available for data collection, it is probable that each man will spend about three hours in every four expended on experimental studies as a subject or observer in the acquisition of biomedical data. One hour per man will be spent as a subject or observer to provide psychological performance data.

The general frame of reference on which the experimental program is based is as follows:

1) The measurements, described in the preceding section, specified as safety, Class 1 and Class 2 measurements, arranged in order of priority by categories as cited, and within Class 1 and Class 2, in the priority as listed.

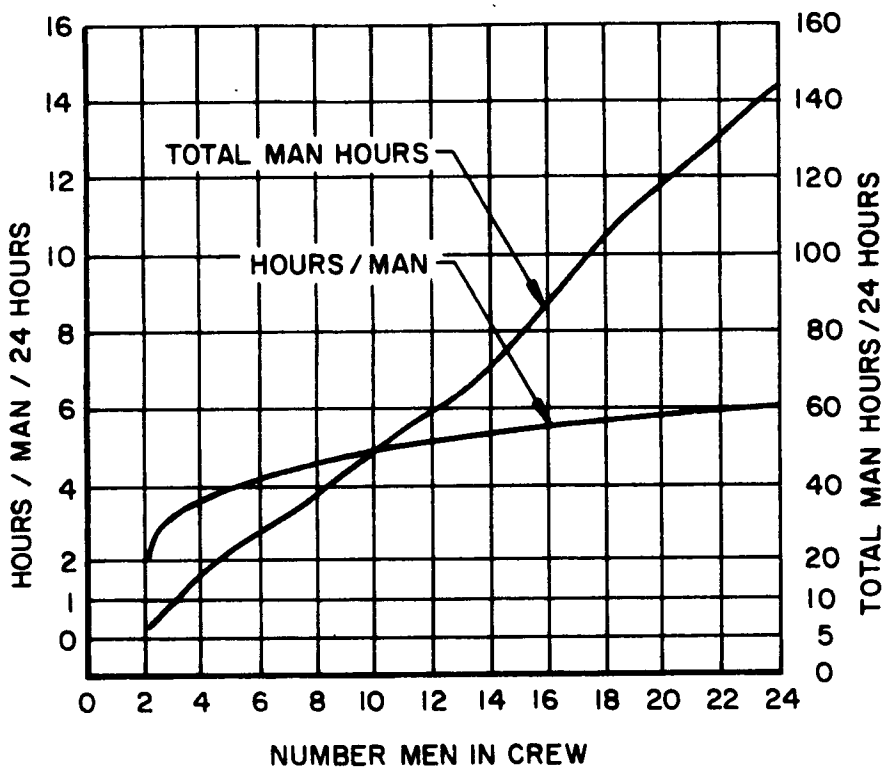

Figure 11. Crew Time Available for Experimental Program

2) The number of subjects required: N = 6.

3) Crew size capacity of projected space vehicles, namely 2, 3, 4, 6, 12, and 24 crew members.

4) Mission durations: 2 weeks, 1, 2, 3, 6, and 12 months selected for study.

5) Space station environmental conditions
   a) No artificial g simulation capability
   b) Centrifuge capability
   c) Rotation capability
   d) Centrifuge and rotation capability

The experimental plans proceed in scope from gross determinations to more refined information. This plan is implemented initially by measurements to determine safety of flight, and is successively increased in focus by Class 1 and Class 2 measurements under static and dynamic conditions. By these essentially factorial type studies, objectives 1 (determine whether man can survive and perform in space for prolonged durations) and 2 (define the physiological and psychological performance problems presented by the space environment) are supported. When problems are detected and defined, studies are to be conducted to determine the effect of various degrees of particular conditioning variables to counteract the space environment. Thus, the intent of Objective 3 (investigate the extent to which artificial g and other measures can be used to counteract the physiological and psychological effects of the space environment) is to be met. Thereafter, based on space flight experience, an optimum program would be possible in which the effects of the space environment on human performance might be predicted and controlled. This last plan would support Objective 4 (provide a program to predict and control the effects of the space environment).

The experimental plans which follow, Tables 29 through 33 , support the general experimental objectives, assuming increasing crew size and capacity of space vehicles. The first 5 plans may be applied to vehicles of limited volume, weight, power, and manning capacity. The plans presented after Plan 5 are for larger vehicles with greater capability.

TABLE 29. EXPERIMENTAL PLAN 1

STATIC TESTING WITH SAFETY MEASUREMENTS

Crew Number: Two to three

Duration of Flight: Two weeks to one month

Measurements	Frequency of Data Collection	Time Estimate per Man
History - No Physical	1/day	5 minutes
Safety Measurements		
Blood Pressure	Launch and first 90 minutes in orbit.	Continuous
ECG	In flight	5 minutes
Respiration Rate and Depth	Re-entry and recovery	Continuous for at least 1 hour; capability for 6 hours
Core Body Temperature	4/day	2 minutes
Body Mass	1/day	5 minutes
Judgment (voice)	2/day	1 minute
Blood	1/day and freeze stored	5 minutes
Urine	1/day and freeze stored	3 minutes
Minimum Re-entry Simulation Performance	1/day	10 minutes

TABLE 30. EXPERIMENTAL PLAN 2

STATIC AND DYNAMIC TESTING WITH SAFETY MEASUREMENTS

Crew Number: Two to three

Duration of Flight: Two weeks to one month

Measurements	Frequency of Data Collection	Time Estimate per Man
History - No Physical	1/day	5 minutes
Safety Measurements		
Blood Pressure	Launch and first 90 minutes in orbit.	Continuous
ECG	In flight: Baseline 4/day Provocative Testing* 1/day	5 minutes 10 minutes
Respiration Rate and Depth	Re-entry and recovery	Continuous for at least 1 hour; capability for 6 hours
Core Body Temperature	4/day	2 minutes
Body Mass	1/day	5 minutes
Judgment (voice)	2/day	1 minute
Blood	1/day and freeze stored	5 minutes
Urine	1/day and freeze stored	3 minutes
Minimum Re-entry Simulation Performance	1/day	10 minutes
Total Body Water	Pre-flight, 1 week, 2 weeks post-flight	1 minute
Visual and Vestibular Produced Illusions	2/day	15 minutes

* Modified Provocative Testing - includes Flack Test at 40 mm Hg, for 15 seconds and exercise with dynamometer and ergometer

TABLE 31. EXPERIMENTAL PLAN 3

STATIC AND DYNAMIC TESTING WITH SAFETY AND CLASS 1 MEASUREMENTS

Crew Number: Two to four

Duration of Mission: One month

Measurements	Frequency of Data Collection	Time Estimate per Man
History	1/Day	5 minutes
Physical Class I	Weekly	20 minutes
If M.D. Aboard, complete Class 1 Examination out of suit		
If no M.D. aboard, modify Class 1 Examination, in or out of suit		
Safety Measurements		
ECG	Launch and first 90 minutes in orbit	Continuous
Blood Pressure	Baseline: 4/day Provocative Test* 1/day	5 minutes 15 minutes
Respiration Rate and Depth	Re-entry and recovery	Continuous for at least 1 hour; adaptability for 6 hours
Core Body Temperature	1/day	5 minutes
Body Mass	1/day	5 minutes
Judgment (voice)	2/day	1 minute
Blood	Every 3 days and freeze stored	5 minutes
Urine	Every 3 days, 10 cc aliquot of 24-hour output	3 minutes
Minimum Re-entry Simulation Performance	1/day	10 minutes
Class 1 Measurements		
Urinary Calcium	On-board at 1, 2, 2.5, 3, 3.5 weeks	5 minutes (for collection only)
Urinary Potassium	" " "	"
Urine Analysis	" " "	"
Hemoglobin	" " "	"
Visual & Vestibular Produced Illusions	Twice Weekly	15 minutes
Kinesthesis	Twice weekly	8 minutes
Orientation	Twice weekly	10 minutes

* Provocative Testing (one or more)
- Flack Test at 40 mm Hg for 15 seconds
- Hyperventilate one minute with maximum breath holding
- Cold pressor and/or carotid sinus massage
- Tourniquets
- Exercise
  - Dynamometer
  - Ergometer

Revised 3 January 1964

TABLE 32. EXPERIMENTAL PLAN 4

STATIC AND DYNAMIC TESTING WITH SAFETY AND CLASS 1 MEASUREMENTS

Crew Number: Two to four

Duration of Mission: Two months

Measurements	Frequency of Data Collection	Time Estimate per Man
History - complete	Weekly	5 minutes
Physical - Class 1	Weekly	20 minutes
No M.D. aboard:		
Modified Class 1 Exam - in or out of suit		
M.D. aboard:		
a) Complete Class 1 Exam - both men out of suit		
b) Modified Class 1 Exam - 1 subject out of suit		
Safety Measurements		
ECG	Launch and first 90 minutes in orbit In Flight:	Continuous
Blood Pressure	Baseline: 4/day Provocative test: 1/day	3 minutes 15 minutes
Respiration Rate and Depth	Re-entry and recovery	Continuous for at least 1 hour; adaptability for 6 hours
Core Body Temperature	Every third day	2 minutes
Body Mass	1/day	5 minutes
Judgment (voice)	1/day	1 minute
Blood	Weekly and freeze stored	5 minutes
Urine	Weekly and freeze stored	3 minutes
Urine Analysis - on board	Weekly	5 minutes (collection only)
Sugar		
Proteins		
Acetone		
Bile		
Osmolarity or Specific Gravity		
Microscopic		
Hematology	Weekly	5 minutes (collection only)
Hemoglobin		
Hematocrit		
WBC and Differential Count		
Minimum Re-entry Simulation Performance	1/day	10 minutes
Class 1 Measurements		
Urinary Calcium - on board	Weekly	5 minutes (collection only)
Urinary Potassium	Weekly	5 minutes (collection only)
Urinary Nitrogen	Weekly	5 minutes (collection only)
Total Body Water	At 2,** 4, 5,** 6 and 8 weeks	1 minute
Regional Blood Flow	Every 3 days	15 minutes
Muscle Strength and Size	Weekly	8 minutes
Oxygen Consumption	Weekly	20 minutes
Vital Capacity	Weekly	20 minutes
Blood Sugar	At 2, 4, 6, and 8 weeks	5 minutes (collection only)
Visual and Vestibular Produced Illusions	Weekly	15 minutes
Kinesthesis	Weekly	8 minutes
Orientation	Weekly	10 minutes
Gross Motor Coordination	Weekly	9 minutes
Mass Discrimination	Weekly	3 minutes
Visual Acuity	Weekly	9 minutes
Ideation	Weekly	5 minutes

* Provocative Testing (1 or more)
Three-minute baseline daily just prior to one conditioning exercise regimens, plus two minutes at halfway point of exercise program, plus two minutes at termination of exercise program.
Flack test at 40 mm Hg for 15 seconds
Hyperventilate one minute with maximum breath holding
Cold Pressor and/or carotid sinus massage
Tourniquets
Conditioning Exercises
Isometric and Isotonic Contractions
Shoulder girdle - vertebral column head to foot traction

** Optional or as required

Revised 3 January 1964

TABLE 33. EXPERIMENTAL PLAN 5

STATIC AND DYNAMIC TESTING WITH SAFETY, AND CLASS 1 MEASUREMENTS

Crew Number: Two to four

Duration of Mission: Three months

Measurements	Frequency of Data Collection	Time Estimate per Man
History - Complete	Weekly	5 minutes
Physical - Class 1	Weekly	20 minutes
No M.D. aboard		
Modified Class I Exam - in or out of suit		
M.D. aboard		
Complete Class I Exam		
Safety Measurements		
ECG	Launch and first 90 minutes in orbit	Continuous
	In flight:	
Blood Pressure	Baseline	3 minutes
	Provocative Test*	15 minutes
Respiration Rate and Depth	Re-entry and recovery	Continuous for at least 1 hour; Adaptability for 6 hours
Core Body Temperature	Every third day	2 minutes
Body Mass	Every third day	5 minutes
Judgment (voice)	1/day	1 minute
Blood	Weekly and freeze stored	5 minutes
Urine	Weekly and freeze stored	3 minutes
Urine Analysis	Weekly	5 minutes (collection only)
pH		
Sugar		
Proteins		
Acetone		
Bile		
Osmolarity or Specific Gravity		
Microscopic		
Hematology	Weekly	5 minutes (collection only)
Hemoglobin		
Hematocrit		
WBC and Differential Count		
Minimum Re-entry Simulation Performance	1/day	10 minutes
Class I Measurements		
Urinary Calcium (24-hour output)	Weekly	5 minutes (collection only)
Urinary Potassium (24-hour output)	Weekly	5 minutes (collection only)
Urinary Nitrogen	Weekly	5 minutes (collection only)
Total Body Water	At 2**, 4, 5**, 6, 8, 10, 11**, 12	1 minute
Regional Blood Flow	Weekly	15 minutes
Muscle Strength and Mass	Weekly	8 minutes
Oxygen Consumption	Weekly	20 minutes
Vital Capacity	Weekly	20 minutes
Blood Sugar	Weekly	5 minutes (collection only)
Reticulocytes	Weekly	10 minutes
Serum bilirubin (quantitative)	Weekly	3 minutes (collection only)
Visual and Vestibular Produced Illusions	1/day	15 minutes
Kinesthesis	Weekly	8 minutes
Orientation	Weekly	10 minutes
Gross Motor Coordination	Weekly	9 minutes
Mass Discrimination	Weekly	3 minutes
Visual Acuity	Weekly	9 minutes
Ideation	Weekly	5 minutes

* Provocative Testing (1 or more)
Three minute baseline daily just prior to one conditioning exercise regimen, plus two minutes at halfway point of exercise program, plus two minutes at termination of exercise program.

Flack test at 40 mm Hg for 15 seconds
Cold pressor and/or carotid sinus massage
Tourniquets
Conditioning Exercises
Isometric and Isotonic Contractions
Shoulder girdle - vertibral column head to foot compression

** Optional

Experimental plan 6, static and dynamic testing, Safety, Class 1 and 2 measurements, centrifugation and rotation, requires larger stations. One-month intervals are recommended for investigation in the initial flights. If no detrimental effects are observed on space crews after one month, the duration of exposure to weightlessness for succeeding crews might be extended to 2, 3, 6, and 12 months. If no detrimental effects were observed, no g force would need to be administered to crews. However, at any point at which the effects of weightlessness were found detrimental, an artificial g program could be instituted.

In the plans to be presented, the effects of weightlessness are studied first. If weightlessness affects human performance, a g force is administered for 1/2 hour per day to succeeding crews lofted for study (1 g recommended). If no detriment in physiological and psychological condition is noted, this g force would be administered over successively shorter durations. On such a basis, the amount and frequency of g required to prevent impaired performance or health could be determined.

Two types of experimental plans are presented in this section: (1) sequential experimental plans, and (2) concurrent or co-incidental plans. The plans provide rotational schedules for crew numbers exposed to selected flight durations (and the alternatives which may be expected during such studies) and a measurement schedule in which prior experience gained in the course of experimentation is taken into consideration. The rotational schedules are based upon the following principles:

1) Six cases are desired to provide adequate confidence in the observed effects of any duration of exposure.

2) The extension of the duration interval in space are to proceed in increasing increments of time on the basis of previous flights.

3) The space crew may not be completely rotated at rendezvous.

4) The effects of weightlessness shall be assessed first, then the effects of varying durations of artificial g.

In a sequential plan for a 4-6 man vehicle, placing six men in space for one year would require 21 months and two vehicles. See Table 34.

TABLE 34. CREW ROTATION SCHEDULE,
6 MAN NON-ROTATING VEHICLE WITH CENTRIFUGE

Months	1	2	3	4	5	6	7	8	9	10	11	12 →
Crew* #	1	3	3	5	5	5	7	7	7	7	7	7
Crew* #	2	2	4	4	4	6	6	6	6	6	6	
Crew # Rotation to Earth	1	2	3		4	5					6	7
Duration in Orbit (months)	1	2	2		3	3					6	6
No. of Subjects (accumulated)	6**	3	6		3	6					3	6

*Crew = 3 men for Crew Numbers 1-7
**Assumes 3 man months of prior Apollo experience

After nine months the second 6-man vehicle could be launched with plans to keep the crew in space for one year. This presumes previous one month experience with Apollo.

If detrimental physiological or psychological performance was observed at any point in the schedule, a conditioning alternative, 1 g for 1/2 hour per day, could be instituted. This would require repetition of the interval in which the degraded performance was first noted with the added conditioning regime. Assuming that conditioning artificial g controlled the degradation in performance, the program would, from the point of repetition, then follow the schedule as shown above.

A second alternative, if 1 g for 1/2 hour per day is not sufficient to control the observed deficiency, might be to institute a second regime (1 g for 1/2 hour twice a day) and then follow the principle of repetition of the experimental interval in which deterioration was first noted. If successful, the successive crew transfer intervals could be increased as scheduled.

If periodic centrifuging does not remove the deficiency caused by weightlessness, the experimentation would need to be continued in a rotating vehicle in which continuous g could be administered. The principle of repetition and then extension

of the duration of time in space would be followed, as in the previous experimentation. The time to arrive at a g decision would depend on the points at which significant deterioration was encountered, the point in the experimental schedule at which the degradation was controlled, and the time necessary to complete a rotating station program, if required.

Note that if a four-man vehicle were used, the data would not provide an adequate number of cases for a confident decision on the effects of weightlessness on man and either additional vehicles or a longer program would be needed to produce the necessary data.

The six-man vehicle, given the requirement for six subjects to provide an adequate sample for decision, and the need for a decision as early as possible on each duration interval, would not practically or efficiently lend itself to co-incidental research plans. In the case of the 12-man vehicle, a co-incidental research plan is an efficient means for studying the effects of the space environment on human performance, as in the schedules shown in Table 35.

TABLE 35 CREW ROTATION SCHEDULE, CO-INCIDENTAL PLAN
12-MAN NON-ROTATING VEHICLE WITH CENTRIFUGE

Months	1	2	3	4	5	6	7	8	9	10	11	12	13→24
Crew* # and Condition**	1A 2B	3A 2B	3A 4B	5A 4B	5A 4B	5A 6B	7A 6B	7A 6B	7A 6B	7A 6B	7A 6B	7A 8B	9A→9A 8B→8B
Crew # Rotation to Earth	1	2	3		4	5			6			7	8 9
Duration in orbit (months)**													
Condition A	1		2			3						6	12
Condition B		2			3				6				12

* Crew = 6 men for Crew Numbers 1-9
** Conditions: A = Zero g environment
B = Periodic centrifugation (1 g for 1/2 hour per day)

There would be data on six subjects at each duration. Both a zero g and an intermittent g environment could be tested simultaneously in a 24-month

period, or another g alternative, not including zero g, could be tested. Only one vehicle with a 2 year lifespan would be necessary for this program, otherwise, another vehicle would have to be launched at the end of the 6-month duration interval (elapsed time, one year) to study one year duration effects.

The schedule shown in Table 36 would provide 6 subjects at each duration. Rotation could be effected with two 3-man or one six-man shuttles. If degraded performance were noted, the same principles as indicated for the 4 or 6-man vehicle would be instituted. Otherwise, this schedule could be completed in 16 months with one space station.

TABLE 36. CREW ROTATION SCHEDULE, SEQUENTIAL PLAN
12-MAN NON-ROTATING VEHICLE WITH CENTRIFUGE

Months	1	2	3	4	5	6	7	8	9	10	11	12 → 16
Crew* #	1 2	3 2	3 4	3 4	5 4	5 4	5 4	5 4	5	5	5	5
Crew # Rotation to Earth	1	2		3				4				5
Duration in orbit (months)	1	2		3				6				12
No. of Subjects	6	6		6				6				6

* Crew = 6 men for Crew Numbers 1-5

The program in Table 37 shows durations studied up to six months in length. If the vehicle could be maintained in space, an additional one year duration series of tests under the indicated conditions could be conducted. All conditions could be studied in this plan within a 24-month period.

TABLE 37. CREW ROTATION SCHEDULE,
24-MAN NON-ROTATING VEHICLE WITH CENTRIFUGE

Months	1	2	3	4	5	6	7	8	9	10	11	12
Crew* #and Condition**	1A	5A	5A	9A	9A	9A	13E	13E	13E	13E	13E	13E
	2B	B	7B	7B	7B	11B	11B	11B	11B	11B	11B	
	3C	6C	6C	10C	10C	10C	14C	14C	14C	14C	14C	14C
	4D	D	8D	8D	8D	12D	12D	12D	12D	12D	12D	
Rotation to Earth	1A		5A			9A						13E
		2B			7B						11B	
	3C		5C			10C						14C
		4D			8D						12D	

* Crew = 6 men
** Conditions = A = Zero g
B = 1 g for 1/2 hour per day
C = 1 g for 1/2 hour, twice a day
D = 3 g's for 1/2 hour per day

Other alternatives which might be implemented would take the 12-Man Non-Rotating schedule, shown above, and study each of the A and B conditions first. If C and D alternatives were necessary, they could be instituted. Thus either a sequential or co-incidental plan could be selected.

The 24-man rotating space station would be very adaptable to the requirements of a weightlessness study. In such a vehicle, there could be a centrally-located module, with centrifuge and other modules out at various distances from the center of rotation. Thus, all desired conditions would be available at one time. The central, or zero g, modules would have a capacity for 12 men. Each of the outlying modules would have capacity for 6 men.

For example:

Crew = 6 men
Conditions:
A = Zero g in central module
B = Zero g with intermittent centrifugation (1 g for 1/2 hour per day)
C = Continuous 1/2 g
D = Continuous 1 g

Months	1	2	3	4	5	6	7	8	9	10	11	12 →	16
Crew # and Condition	1A	3A	3A	3A	5A	5A	5A	5A	5A	5A	5A	5A →	5A
	2A	2A	4A	4A	4A	4A	4A	4A					
	6C	8C	8C	8C	10C	10C	10C	10C	10C	10C	10C	10C →	10C
	7C	7C	9C	9C	9C	9C	9C	9C					

If detrimental physiological or psychological performance were observed at any point in the schedule, the conditioning alternative B could be instituted for the zero g group or D for the continuously rotated 1 g group. The same principles described for the above list would be followed for such a study.

This program would take 16 months for completion under normal conditions. If detrimental conditions were observed, many alternatives would be available to be instituted for control of the observed deterioration. The rotation of the station might be stopped and restarted to observe the effects of periodic continuous intervals of artificial g. It might be operated at selected rpm to achieve less or more than 1g. The effects on the subjects of centrifuging as compared to continuous rotation could be studied. Other alternatives might be continuous zero g alternated with continuous 1g or 3g.

Onboard biomedical and human factors research facilities include the following:

1) Centrifuge: mandatory
2) Barany chair, or equivalent
3) Psychomotor test panel
4) Mass spectrometer (optional)
5) Gas chromatograph (optional)
6) X-ray (optional)
7) X-ray emission spectroscope (desirable) scintillation counter

8) Centralized biomedical and human factors monitoring console

a) Data display

1) Analog display - strip chart recorder

2) Digital displays (two)

3) Analog display - oscilloscope

4) x-y recorder (optional)

b) Transducers and signal conditions as required by measurements

9) Clinical laboratory facilities

a) Biochemical assay instrumentation

b) Storage facilities for instrumentation and reagents

10) Data management

a) Data storage:

High capacity digital storage system
(frequency capability 0 - 100 cps)

b) Data management
Onboard computer capability

Onboard medical dispensary requirements include the following:

1) Surgical materials

2) Medications

3) Examining equipment

Comparison of the experimental measurements in Tables 29 to 33, which set forth the biomedical and psychological performance measurements to be collected from crew members aboard the space vehicles, will show that the examination time intervals between measurements are lengthened for collection of data in the case of measurements on which experience has accumulated from preceding space flights. In the less limited flight durations and crew size vehicles, the required measurements are extended to encompass all Class 2 measurements. Also, the time interval between measurements is again lengthened in many measurements as compared with the preceding program. Finally, it may be noted that as the vehicle grows in size, more medical laboratory-type measurements are recommended for processing onboard the vehicle.

The set of variables in Table 38 will provide the matrix of measurements from which measurements for particular environmental factors can be selected.

TABLE 38 . MEASUREMENT SCHEDULE

Measurements	Frequency of Data Collection	Time Estimate for Measurement of Man
History	Weekly for first 3 months; bi-weekly for duration.	5 minutes
Physical		
Class 1	Weekly	20 minutes
Class 2 (optional)	Bi-weekly	30 minutes
Safety Measurements		
ECG 3 lead (12 lead optional)	Launch & first 90 minute in orbit In flight:	Continuous
Blood Pressure	Baseline 4/day first Provocative Test* (centrifuge only) 2 weeks 2/day 3rd & 4th weeks 1/day - 4-8 weeks Every 2 days - remainder of mission	3 minutes
Respiration Rate and Depth	Re-entry and recovery	Continuous for at least 1 hour; adaptability for 6 hours.
Core Body Temperature	4/day - first 2 weeks 2/day - 3-4 weeks	2 minutes
Body Mass	1/day - 4-8 weeks	5 minutes
Judgment (voice)	Every 2 days - remainder of mission	1 minute
Urine Analysis	Weekly	5 minutes (collection only)
pH Sugar Proteins Acetone Bile Osmolarity or Specific Gravity Microscopic		
Hematology	Weekly	5 minutes (collection only)
Hemoglobin Hematocrit WBC & Differential Count		
Minimum Re-entry Simulation Performance	1/day	10 minutes

* Provocative Testing (1 or more): Flack Test at 40 mm Hg for 15 seconds; Hyperventilate one minute with maximum breath holding; Cold pressor and/or carotid sinus massage; Tourniquets; Exercise using dynamometer and ergometer

TABLE 38. MEASUREMENT SCHEDULE (Cont'd)

Measurements	Frequency of Data Collection	Time Estimate for Measurement of Man
Class 1 Measurements		
Urinary Calcium	Every 2 days for 2 weeks, then weekly	
Urinary Potassium	Every 2 days for 2 weeks, then weekly	5 minutes (collection only)
Urinary Nitrogen	Every 2 days for 2 weeks, then weekly	
Total Body Water	Every 2 days for 2 weeks, then weekly	1 minute
Regional Blood Flow	Daily with centrifuge only for one week, then every 2 days	15 minutes
Muscle Size and Strength	Every 2 days for 2 weeks, then weekly	8 minutes
Creatine Creatinine ratios	Every 2 days for 2 weeks, then weekly	1 minute (collection only)
Oxygen Consumption	Every 2 days for 2 weeks, then weekly	20 minutes
Vital Capacity	Weekly	
Blood Sugar	Weekly	5 minutes (collection only)
Reticulocytes	Monthly (weekly as option)	10 minutes
Serum bilirubin	Weekly	3 minutes (collection only)
Visual & Vestibular Produced Illusions	Before, during, after centrifuge, if used	15 minutes
Kinesthesis	Before and after centrifuge, if used	8 minutes
Orientation	Before and after centrifuge, if used	10 minutes
Gross Motor Coordination	Before and after centrifuge, if used	9 minutes
Mass Discrimination	Before and after centrifuge, if used	3 minutes
Visual activity	Before and after centrifuge, if used	9 minutes
Ideation	Before and after centrifuge, if used	5 minutes
Class 2 Measurements		
Urinary phosphorus	Every 2 days for 2 weeks, then weekly	2 minutes (collection only)
Urinary Sodium	Every 2 days for 2 weeks, then weekly	
Cardiac output	Every 2 days for 2 weeks, then weekly	15 minutes
Venous Distension	Every 2 days for 2 weeks, then weekly	2 minutes (collection only)

TABLE 38 . MEASUREMENT SCHEDULE (Cont'd)

Measurements	Frequency of Data Collection	Time Estimate for Measurement of Man
Extracellular Fluid Space	Weekly, 1 month then every 2 weeks	
Urinary Mineral Corticoids	Weekly, 1 month then every 2 weeks	30 minutes (collection only)
Total Blood Volume	Weekly, 1 month then every 2 weeks	30 minutes
Phonovibrocardiogram Pulse Wave Velocity	Daily with centrifuge, if used for 1 week, then every 2 days	15 minutes 10 minutes
EMG (recruitment rate)	Every 2 days for 2 weeks, then weekly	10 minutes
Urinary Catecholamines	Weekly for 1 month, then monthly	
Bleeding Time	Monthly	2 minutes (collection only)
Intestinal Motility	Weekly for 1 month, then monthly	1 minute
Feces Analysis	Monthly	2 minutes (collection only)
Blood proteins	Monthly	2 minutes (collection only)
Tracking	Before and after centrifuge, if used	5 minutes
Fine Motor Coordination	Before and after centrifuge, if used	5.5 minutes
Reaction Time	Before and after centrifuge, if used	3.5 minutes
Time Perception	Twice weekly	5 minutes
Mental Abilities	Before and after centrifuge, if used	9 minutes
EEG	Before and after centrifuge, if used	10 minutes
Rate of Change-depth perception	Weekly	10 minutes
Form discrimination	Weekly	3 minutes
Motion discrimination	Weekly	10 minutes
Ability to coordinate visual axes	Weekly	0.5 minute
Sensitivity to brightness	Weekly	3 minutes
Acuity after photic stimulation	Weekly	15 minutes
Binocular rivalry	Weekly	2 minutes
Depth perception	Weekly	1.5 minutes

For example, to study the effects of toxic contaminants, one could refer to Table 22 and Table 25, which show the expected measurable relationships of physiological function and psychological performance responses to the environmental factors. Similarly, for any environmental factor the physiological and psychological measures indicated can be selected to provide significant information on response. For example, toxic contaminants; electrical activity of the heart; pulmonary, respiratory, hematological, neuromuscular, metabolic, and digestive characteristics are shown as probable indicators of alteration in function due to toxic contaminants.

It may be that short light/dark cycles, as compared with 24-hour light/dark cycles on Earth, will disrupt or alter the life processes which are thought to be regulated by entrainment or coupling of an internal or biological "clock" to the external cycling or phasing. In space, at the probable projected attitudes at which proposed studies are to be made, 90-minute orbits around the Earth will constitute one complete light-dark cycle. Thus, there would be about 16 light/dark cycles in the space environment to one light/dark cycle on earth. The question posed by this information is: What are the effects of the near earth space environment periodicity on human biomedical and psychological performances?

Folke has presented a data collection plan to provide data on the effects of the space environment diurnal cycle on human performance. Measurements bearing on the periodicity factor could not only be useful in providing insight on the phenomenon itself, but might also be used to account for a part of the variance in performance when the effect of weightlessness on performance was of primary interest. The following modified scheme of particular measurements, and their frequency of collection, might be employed to provide data on the circadian rhythm factor.

Measurements	Frequency of Collection
Heart Rate Respiration Rate	1 minute every 1/2 hour during sleep
Hematology Leucocyte Diff.	Every 3 hours

Measurements	Frequency of Collection
Urine	Every 3 hours
Electrolyte Output	
Na	
K	
Corticosteroids	
Catecholamines	
Core Temperature	Every 3 hours
Blood Sugar (possibly)	Every 3 hours

At least one month before projected space flights, measurements should be made on all of the biomedical and psychological aspects of performance tested in Table 38. The tests should be conducted under normal Earth conditions in accordance with the recommended frequencies for measurements as listed in the table. The crew members who will administer the tests and take the measurements should be used to take the measurements on Earth. It is obvious that it will be necessary to provide an adequate period of training for all crew members, both as test administrators or observers and as test subjects. Care should be taken to ensure that standard administration procedures are followed and adhered to for collection of the data over the duration of the space flight studies. Studies shall also be conducted to determine that all subjects have achieved a plateau in learning, where learning is not likely to change over the duration of the space flights. Cross-training will be required for the space crew members so that they can successfully accomplish all measurement tasks in space flight. For at least one month or until a return to pre-flight status, after completed space flights, all biomedical and psychological aspects of performance tested previously should be retested.

There are two types of requirements to be met by means of the data collected on the performance of man in space. On the one hand, physicians who will be responsible for the health and safety of man will want to assure themselves on a clinical basis that each crew member stays in satisfactory condition. The data for this purpose will need to be current and small in number, as shown in Table 38. It will not be necessary to conduct involved statistical and/or mathematical analyses of these data. For each subject, pre-flight control data will serve as a basis for evaluation of possible inflight changes.

There will be data intended primarily for systematic analysis, and it will probably be examined by use of appropriate statistical and mathematical techniques.

As the physiological and psychological performance data for the various time intervals in space are collected, it will be possible to compute means and variances for the responses to the complex of environmental conditions including countermeasures. Similarly, pre-flight and post-flight data will be summarized and combined with this flight data. Given a set of experiments for a particular duration, the set of responses should be examined by means of Wilks' Λ analysis of variance techniques. Succeeding sets of similar data could be examined by the same technique and/or by making co-variance adjustments to leave the relationship between particular factors of interests clear for study; really to identify the basic factors of response. Then analyses of variance, regression, and correlation analyses should be undertaken to determine the degree of relationship for the matrix of response variables. Canonical analysis, a system of factor analysis, may be used to identify a minimum number of measurements for describing the physiological and psychological functions of man in space. Provided with critical functional relationships it would be possible to develop biomathematical equations to describe the mechanisms of response to selected specific environmental factors.

The space environment probably will produce physiological and psychological effects which will necessitate comprehensive and exhaustive study. There are advantages to be derived in the use of animals for such studies. Animals may be subjected to degrading environments which, without modification, will cause irrevocable changes and death. They may be sacrificed to study macro- and micro-anatomical changes of organs and organ systems. Using animals, various surgical techniques which would be considered too hazardous for use on man may be employed. Techniques may be developed for human use in future space flights.

If weightlessness over prolonged durations were cumulatively detrimental to physiological and psychological performance control, countermeasures not available in the human experimental program could be used to supplement the information on control measures.

The effects of radiation will not be systematically studied using man as a subject. Animal studies, however, could provide information on radiation environments in which man might later be subjected during interplanetary travel.

Periodicity is a possible effect which needs more investigation. Small animals with relatively short life spans would be ideal subjects for such studies. They could, for example, be subjected to a particular periodicity over a number of generations.

Because animals have shorter life spans than man, responses which might occur in man later in time could occur sooner in animals. If this were true, animals could become detectors of effects which could be predicted and controlled in man. Therefore, animals might be subjected to the same conditions as man, i.e., they could be taken aboard the space vehicle with man, for observation of space environmental effects on them.

SECTION VI

SPACE STATION DESIGN REQUIREMENTS

A. SPACE STATION CHARACTERISTICS

1. Objectives

The primary aim of this section is to summarize all pertinent space station constraints: engineering, system, and those of the present NASA space station program. Having presented these constraints, an outline of onboard biomedical and human factors experimentation and monitoring facilities follows. These were chosen to help define the requirements of interplanetary flight by a space station program. In Section VIII, trade-off analyses are performed for the various categories of space stations to define the optimum combination of crew, facilities and experimentation recommended for each station.

The present design study is, of necessity, highly limited. Therefore conclusions and numerical results may in some cases conflict with the more detailed engineering outputs of the various current NASA space station study contracts (e.g., Extended Apollo, MORL, MOSS studies). There has been some limited intercommunication between some of these studies and the Republic study, and this would preclude the possibility of significant divergences. However, overall space station specifications and capabilities can be highly sensitive to detailed system decisions (such as in waste water, carbon dioxide treatment in the life support system, and in active rendezvous radar used in the guidance and navigation system).

Configuration concepts and constructional details (e.g., gas leaks) are also extremely influential in determining the payload, volume, and power remainders available for trade-off purposes.

An important assumption made throughout the study is that all payload weight, volume, and power can be budgeted towards the biomedical and

human factors task. The results are, therefore, an indication of the maximum bio-experimental capability.

2. Boosters

In view of schedule and budgetary commitments, the means for injecting the experimental space stations into orbit must be one of the presently programmed boosters: Saturn I, Saturn IB, Titan IIIC, or Saturn 5.

The capabilities of the first three boosters listed are comparable. There is, however, considerable gap in performance between this group and the Saturn 5 booster vehicle. As a result, the former yields space station configurations which are fairly restricted in payload, volume, power and correspondingly, crew size. The Saturn 5 capability, on the other hand, offers a liberal supply of these characteristics in a space station design. Since the smaller boosters tend to yield space stations having a crew size of four with possible accommodation of six crewmen, these stations will tend to be marginal for the desired live sciences experimentation program. This is because the minimum desirable crew size of six for experimentation will match the maximum capacity of such stations. On the other hand, the Saturn 5-boosted space station has a normal crew capacity of 24, and a maximum crew capacity of 36. This crew capacity comparison implies that the minimum space station which would meet the desired objectives is somewhere within the gap created by the booster performance spread. It is not necessarily economical, however, to produce a new booster vehicle which has the intermediate performance desired, but certain possibilities which appear worthy of further consideration present themselves. These possibilities are as follows:

1) Equip a space station, launched by Saturn 1 B booster, with an onboard rocket propulsion stage.

2) Equip the Saturn 1 B with strap-on boosters as with the Titan III C.

3) Degrade the Saturn 5 booster by, for example, boiler plate second or upper stages.

4) Rendezvous smaller boosters, having two or more sections of a space station essentially fabricating one larger station in orbit. The second and third launches would be cargo and crew equipped, to replace later resupply and logistics launches, thereby helping to keep program costs down.

A comparison chart of booster capabilities is presented in Table 39, based on unclassified data published to date. These capabilities are indicated in terms of the probable range of space station characteristics for each booster.

TABLE 39. COMPARISON OF BOOSTER CAPABILITIES

Booster Vehicle	Space Station Payload into Orbit (200-250 N. Mi Circular Orbit)lb Eastward AMR Launch	Upper Stage Diam., Ins.	Restart Capability Final Stage	Corresponding Space Station Living Volume Range Cu Ft	Corresponding Station Crew Size Range	Corresponding Power Range Kw
Saturn I	19,000	220	No	1000- 3000	2 - 4	1.5 - 2.5
Titan III C	25,600	120	Yes	1000- 3000	2 - 6	2 - 4
Saturn I B	32,000	260	Yes	1000- 3500	2 - 6	2.5 - 4
Saturn 5	220,000	396	Yes	40,000-70,000	6 - 36	20 - 40

3. Space Station Concepts and Configurations

Of the space station designs presently under consideration, the following are of particular interest in the biomedical and human factors evaluation:

1) Extended Apollo
2) Manned Orbital Research Laboratory
3) Manned Orbiting Space Station:
   a) Zero G Space Station
   b) Erectable Hexagonal Torus
   c) Rotating, Radial Module Station

4) Extended Apollo Space Station

This class of space station, Figure 12, offers, as a minimum, a logical but limited extension to Mercury and Gemini experience in terms of time of exposure to weightlessness. As a maximum, adaptation of a pressure vessel to function as a laboratory permits the accomplishment of a short-duration MORL-type space station mission. A Saturn 1 B booster is mandatory in order to meet payload requirements. A nominal payload weight of 32,000 lbs, corresponding to 260 nm circular orbital altitude, is assumed. AMR 90 degree launch is assumed using an 80 nm parking orbit.

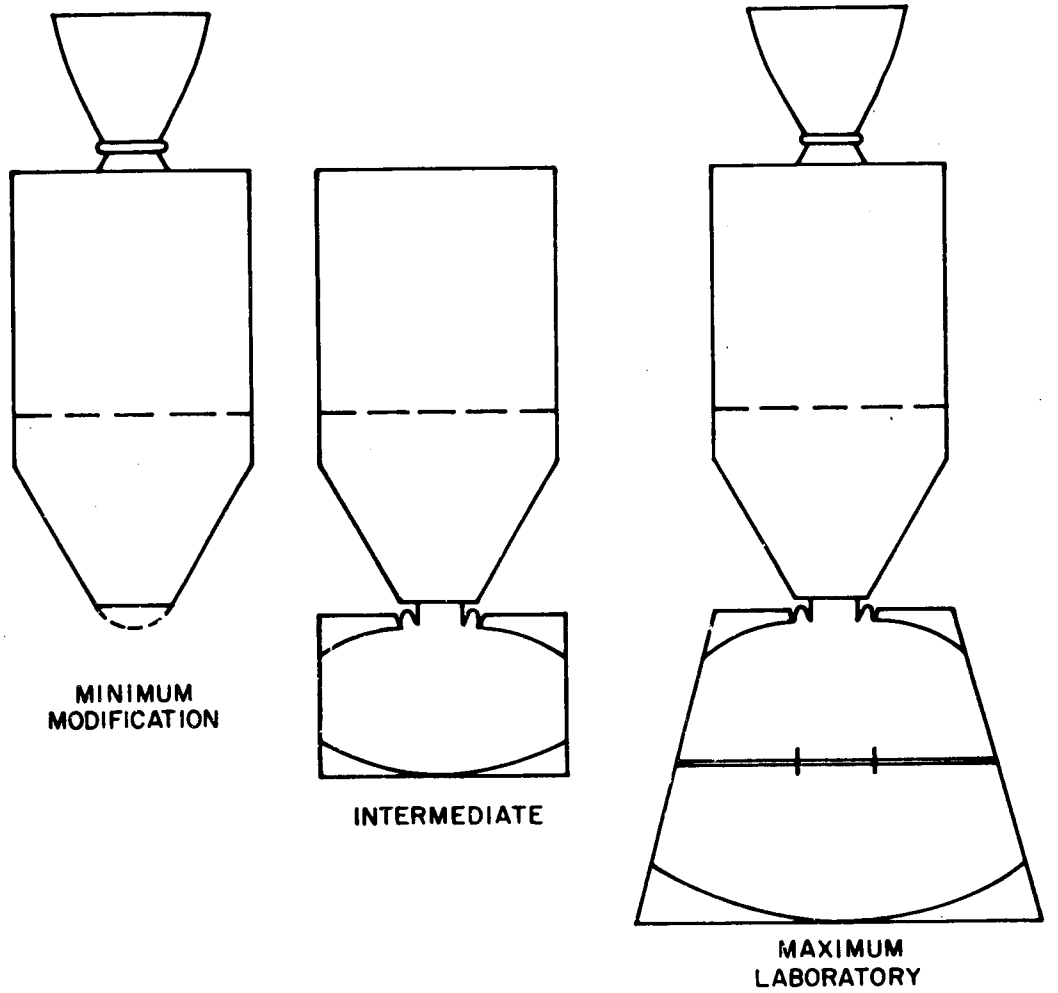

Figure 12. Extended Apollo Configurations

(1) Minimum Modification

The existing lunar spacecraft has a three-man capacity command module. Deletion of the provisions for one man plus deletion of specific lunar mission payloads, results in an additional useable volume of 70 to 100 cu ft. Since payload capacity of the command module is limited in volume, the additional mission provisions and experimental equipment will be that which can occupy the free volume. At typical payload density of 20 to 30 lb/cu ft, the possible payload will vary from as little as 1400 lbs to as much as 3000 lbs. Additional payload, to make up a potential figure of 6250 lbs for a 100-day mission (with possible extension to 120 days), may be placed within the service module. Detailed trade-off studies of the minimum modification Extended Apollo space station will decide whether the fuel cell power system (which supplies a surplus of daily water) or a solar cell system(with a water recovery system) is the better choice. Results of the present study favor the solar cell system for the 100-day mission, however the need to minimize modifications may dictate retaining fuel cells.

Power management is particularly important with the Extended Apollo category, since the maximum average power available will be in the area of only 1.5 kw. Of particular concern is the guidance and navigation system power if actively required for rendezvous purposes.

(2) Intermediate Extended Apollo Station

For concepts (2) and (3) it is necessary to turn the command and service modules around in orbit and dock on the laboratory. The intermediate concept Extended Apollo supplements habitable volume by incorporating a living compartment in place of the rocket engine nozzle. Re-entry requirements are such that a small solid rocket engine may be satisfactory. A laboratory volume of from 500 to 1500 cu ft is possible at a diameter of 154 inches. A maximum of three men can be accommodated in this case. Power requirements for three men are, however, prohibitive without power augmentation above the 1.5-kw power level.

(3) Large Laboratory Extended Apollo

The third concept Extended Apollo incorporates a larger living compartment which is located in the LEM interstage adapter region. A volume of 2500 to 3300 cu ft is feasible at a diameter which varies from 154 to 260 inches (the latter being the S-IVB stage diameter). Such a concept offers the possibilities of providing improved power and environmental control, increased storage capacity, and system redundancies.

Prime changes suggested are conversion to a mixed gas (nitrogen-oxygen) atmosphere, substitution of molecular sieve or some $CO_2 \rightarrow O_2$ conversion system in place of LiOH absorbers, and a water recovery system (if solar cell power is used). Gravity simulation by internal centrifuge appears practical only for the large laboratory concept (3). A rotating vehicle approach may be used with the other concepts, resulting in complex dumbbell-type configurations. The estimated cost for either of these Apollo space stations for a 100-day mission is roughly one-tenth that for a MORL, including its resupply for a one-year mission. The large discrepancy in costs is mainly the cost penalty involved in resupply boosters and vehicles.

The primary advantage of an extended Apollo is early availability of a zero g small space station for an intermediate time period (100-120 days). To be of most value to the space station program, an Extended Apollo should be flown well ahead of the design phase of larger space stations.

b. Manned Orbital Research Laboratory (MORL)

Several MORL concepts are available, with volume of the living area as the major variable. In general, Saturn I, Titan IIIC, and Saturn 1B boosters may be used. Heavy emphasis is on the latter because of its greater payload capability. This permits better laboratory volume, greater storage capacity for consumables (therefore reducing the need for frequent resupply activities), more sophisticated power and environmental control systems, as well as more system redundancies.

Range of pressurized cabin volume is expected to vary from 1000 to 3000 cubic feet, with diameters of from 154 to 220 inches. Length may vary to accomodate one or two decks. Method of gravity simulation can vary from no facilities to internal or external centrifuge, or a rotating dumbell arrangement (Figure 13) whereby the station capsule is linked to the expended upper stage of the booster vehicle and the combination rotates about an axis between the two modules. For the time being, use of an expended booster upper stage as a living module attached to a space station does not appear desirable. However, it might be used for a waste collection area or a shelter for resupply vehicles.

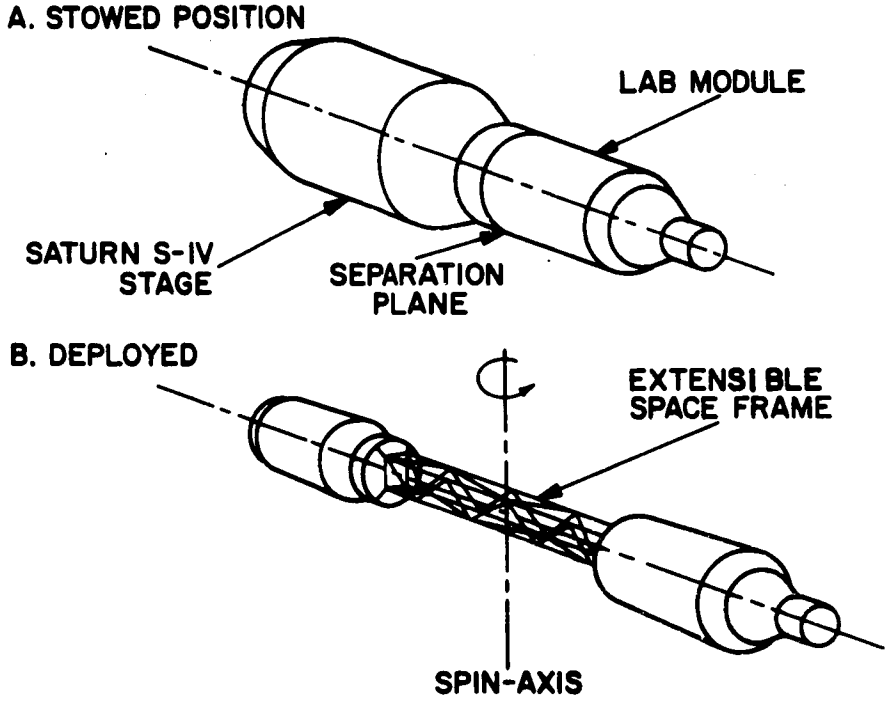

Figure 13. MORL Artificial Configuration - Dumbbell Concept

Power system type or power level restrictions are not present as in the case of Extended Apollo. The large MORL stations, capable of accomodating up to a crew of six, appears to be the most satisfactory of the MORL's as a solution to experimentation program requirements. The most versatile MORL would be one where a simple cabin plus internal centrifuge (capable of simulating g up to reentry g levels) were available.

The MORL condition at orbit injection may be unmanned (to permit greater space station payload) or it may be provided with a re-entry capsule attached, to permit preliminary manning and activation of the space station.

c. Three-Radial Module MOSS

This erectable configuration is illustrated in Figure 14. Graduated levels of artificial gravity by a factor of roughly 2 to 1 (i.e. from about 0.4g to 0.2g) can be obtained in each arm of the configuration, between the outer module and inner module. Each radial arm contains six possible living areas of 14.5-ft diameter and a typical "ceiling height" of 7.5 ft. The zero g section of this station can be a two-deck laboratory of 6000 - 7000 cubic ft volume, which allows ample room for zero g experimentation.

A steady, moderate level of gravity simulation is available due to rotation. Re-entry g levels can be simulated by using an internal centrifuge in the hub of this type station.

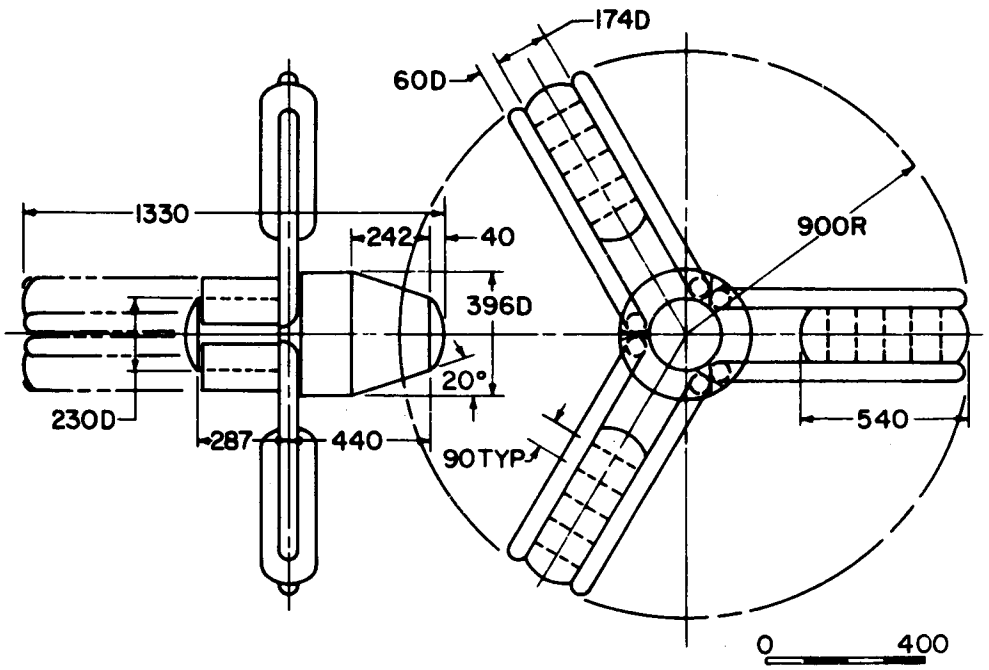

Figure 14. Three-Radial Module Space Station

Station-keeping fuel will be a resupply problem with this configuration. In the event of further rapid decay of the artificial radiation belts, a higher orbital altitude offers improvement in station-keeping without significant shielding weight increase.

This station offers the greatest versatility of all the concepts under consideration since it permits a zero g laboratory, steady moderate g (less than unity), and re-entry g levels.

d. Zero Gravity MOSS

This configuration is currently under study at Douglas MSSD. It is a 33-foot diameter cylindrical shape approximately 75 ft long, with a possible internal hangar for resupply vehicles. A gross pressurized volume of 63,300 cu ft is available in the non-hangar equipped version, whereas the hangar version has only 44,500 cubic ft. Net laboratory volumes are given by Douglas to be 18,000 cu ft and 14,500 cu ft, respectively, including a centrifuge section volume of 5430 cu ft. The values presented in the net volume curve for such a station (Figure 16) are based on earlier information, and agree with the new value for the smaller volume station after simply adjusting gross volume, at a capacity condition of 36 men and 2 years maximum duration.

It is assumed that only one centrifuge will be used on this station with possible multiple occupancy. In view of typical crew size for such stations, it is very likely that the centrifuge, if found to be of prime importance, will be in such great demand that maintenance of the facility and its instrumentation may become a critical problem.

e. Hexagonal Torus (Six Tangential Module) MOSS

Two configurations of large, erectable, hexagonal space stations have been under investigation for NASA: one version is reviewed in NASA Technical Note TN-D-1504, which was studied by North American Aviation, (and reported in their SID 62-258-1), under NASA Contract No. NAS1-1630; and the later version is reported in Lockheed Report LR 16527 under Contract No. NAS1-2207. A layout

diagram of the latter configuration is shown in Figure 15. The latter is clustered at launch into a 103-foot height along with the 60-foot approximate height of Apollo command and service modules and escape tower. The Apollo vehicle supplies a minimum crew to activate the station, and offers emergency escape for the crew. Personnel are brought aboard later using resupply vehicles docked in a turret above a zero g lab. Maximum hub diameter is 33 feet. Maximum radius to the modules from the spin axis is in the neighborhood of 75 feet. Each module has a cylindrical diameter of 10 feet, and a length of 56 feet. Each module is assigned to a particular purpose, e.g., operation and control, experiments, living, etc. In the event of damage to a module (meteoroid penetration, etc.) the module can be abandoned and entry made later for repairs under space-suit conditions. With an enclosed hangar at the hub, the zero g laboratory living volume appears rs restrictive for crew sizes greater than four over a long period of time.

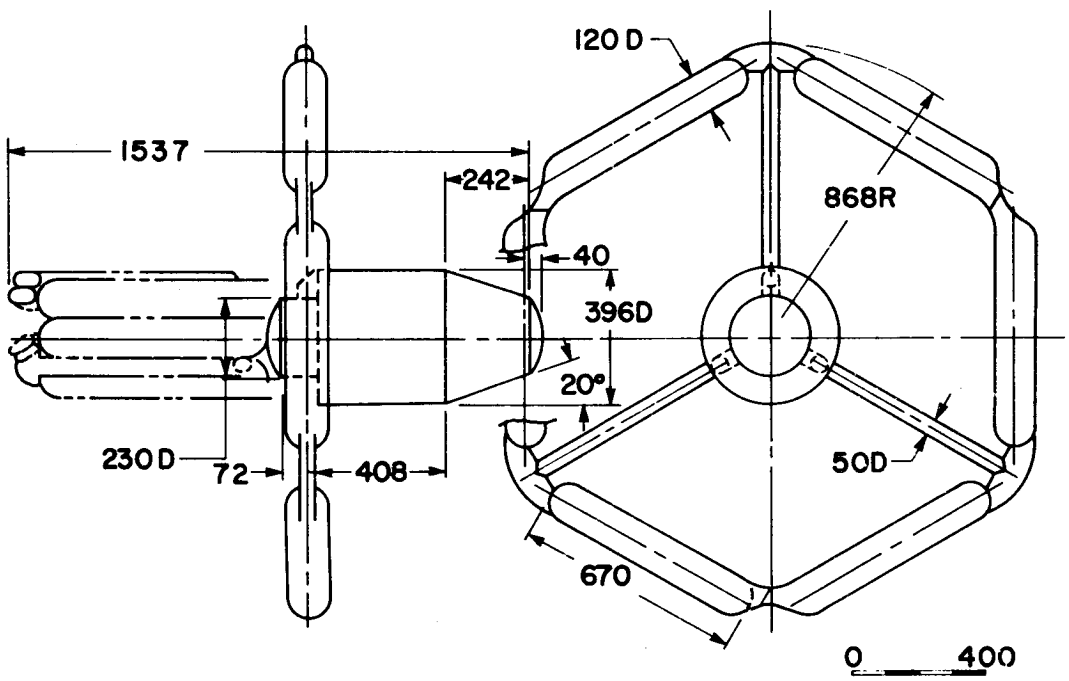

Figure 15. Hexagonal Torus Space Station

4. Volumes

Considering the importance of volume, from both a human factors standpoint and the engineering standpoint, it is unfortunate that no firm design

standards have been or can be established. Experience with human confinement in other than space vehicles is not necessarily applicable. Also, confinement to date in space vehicles has been restricted to one person for several days, which is not transferrable to large crew space missions for periods of many months.

In the weightless condition, there is considerably greater freedom of attitude of the crew when unrestrained, and although the swept volume required when performing a function may be the same as under gravity conditions, the effective floor area might tend to increase. Owing to the weightless condition and the freedom of attitude, frequent collisions between crew members and with equipment and walls may be anticipated. It is therefore indicated that sharing of volume for different functions should be discouraged wherever the crew is not restrained to seats or bunks.

Since a quantitative basis was required for evaluating space station experimental volume availability with varying crew sizes and mission durations, sets of model conditions were assumed and increments were established for the various onboard functions. These were projected on the basis of increasing unit volume per man as crew size and mission duration increased.

The estimated volume requirements are plotted in Figure 16 to give representative basic living and working volumes, for spacecraft missions, with the respective crew sizes and mission durations. In the evaluation of the various space station designs, values have been interpolated and extrapolated for mission conditions other than those shown.

In the analysis of net volume for experimentation, the total space station pressurized volume was taken, and then the volumes were subtracted for non-usable passages and airlocks, living and working volume requirements and the consumables storage for the assumed crew size and duration (before resupply). The results are plotted in the form of net available biomedical experimental volume versus mission duration (before resupply) for the small space stations in Figure 17 and for the large space stations in Figure 18 . For clarity, the large and small MORL curves have

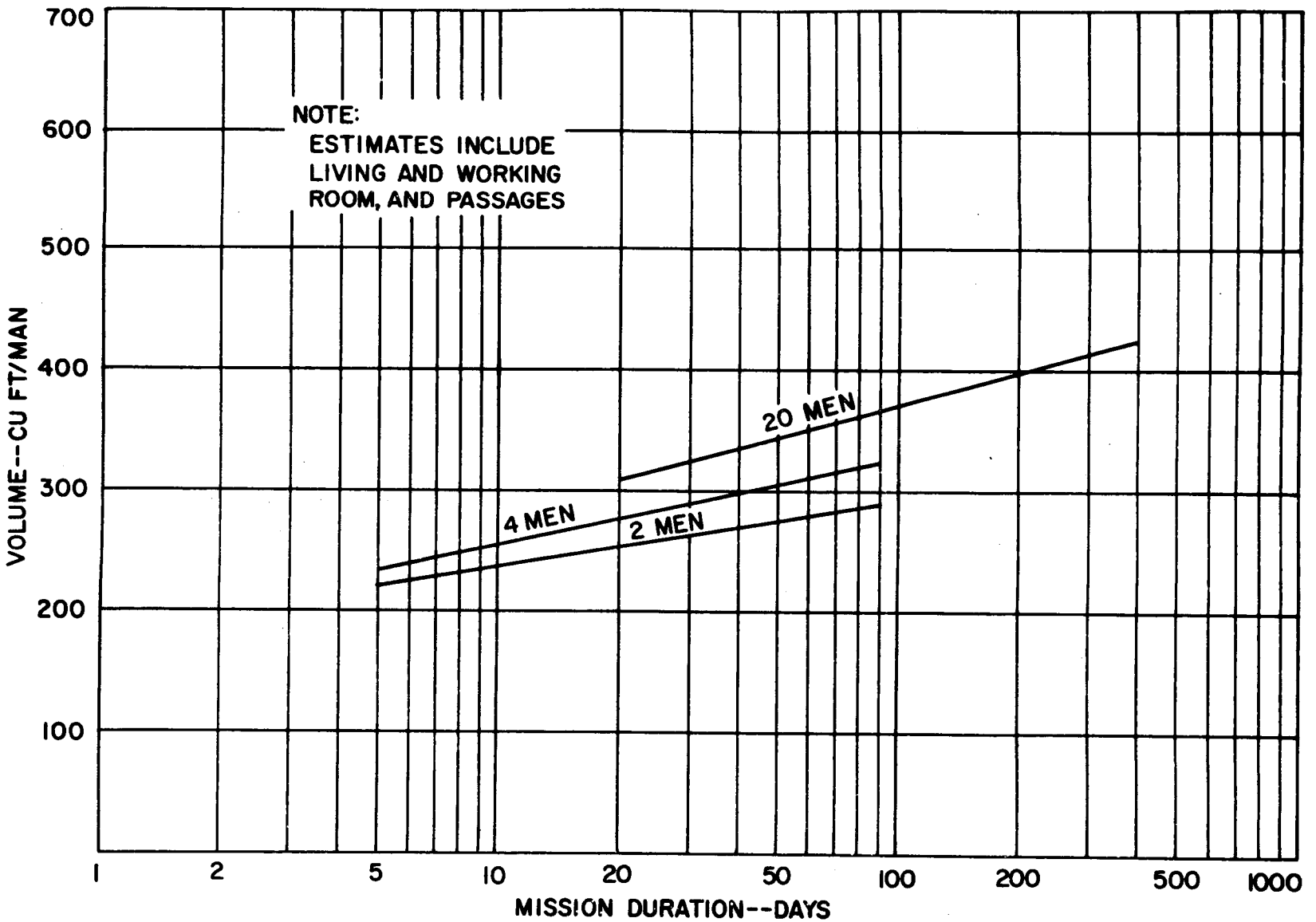

Figure 16. Spacecraft Volume Requirements

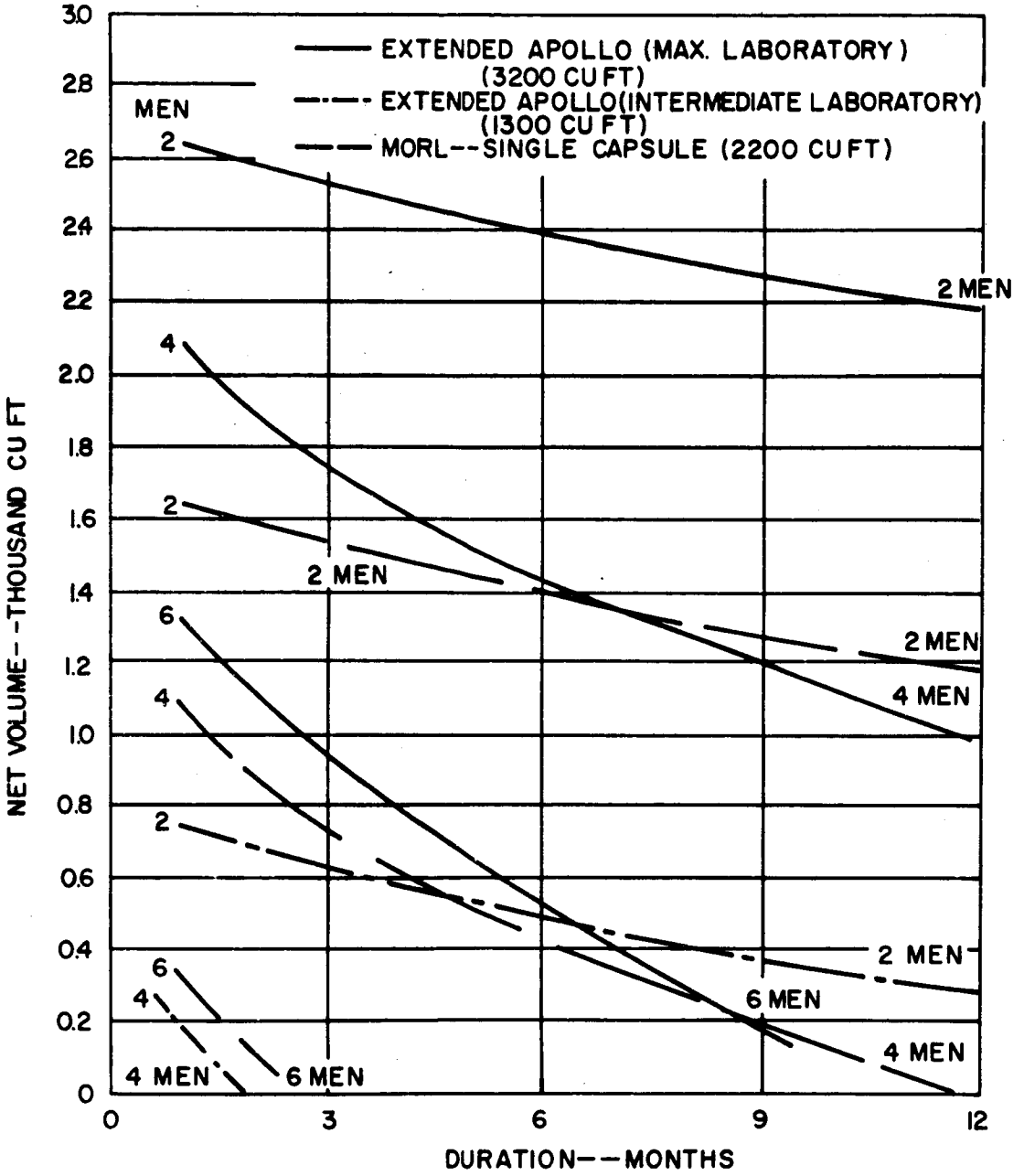

Figure 17 . Volume - Small Space Stations

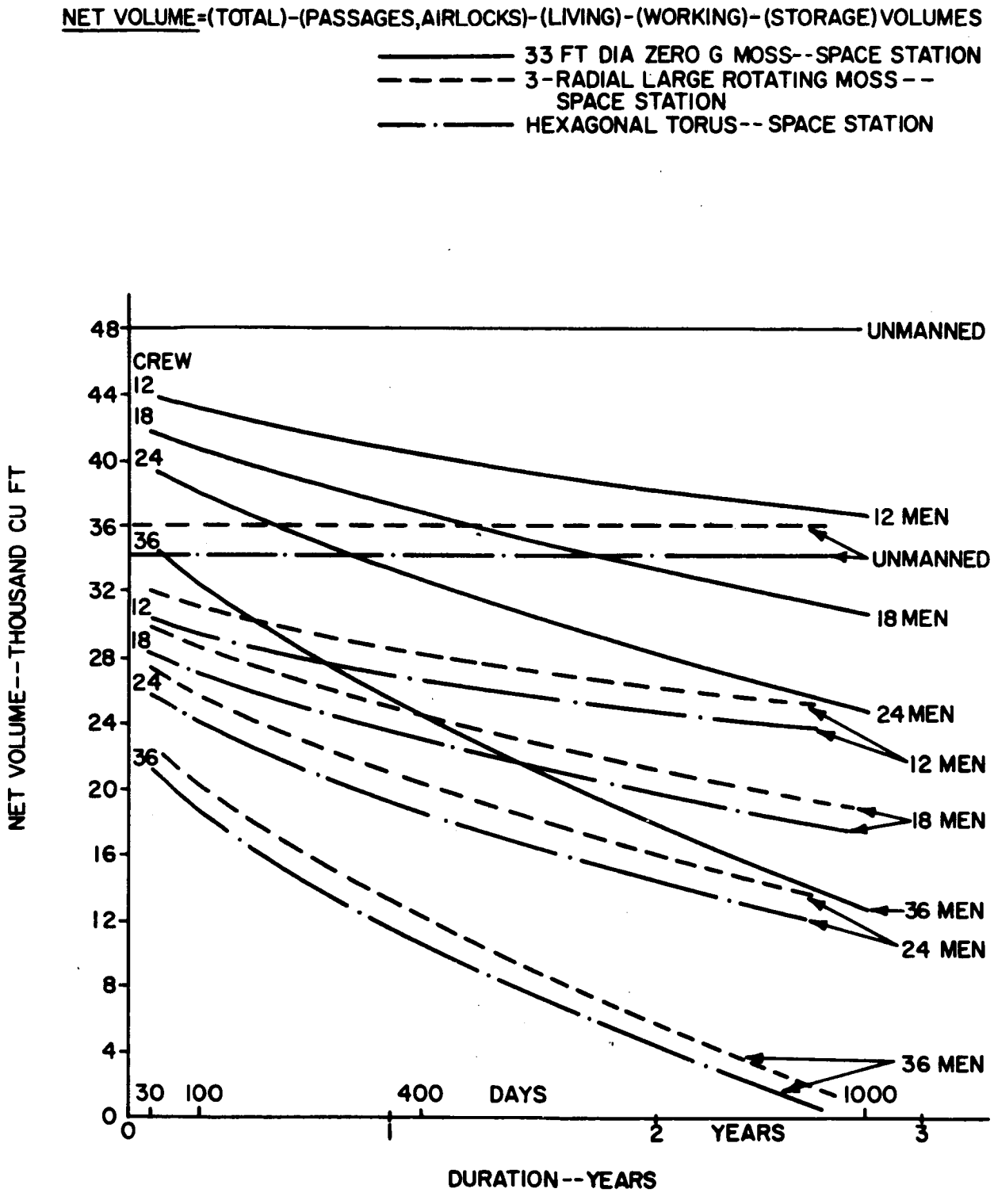

Figure 18. Volume - Large Space Stations

been omitted, since they are similar to the curves for the minimum and largest Extended Apollo and can be obtained by arithmetic adjustment.

The conclusions which can be derived from these plots for various missions, rounding off the figures, are as follows:

	Space Station	Crew	Net Available Experimental Volume	
a.	Extended Apollo		(100-120 day duration)	
	Minimum modification version:	2	- cubic feet	
	Intermediate version (1300 cu ft lab)	2	600 cubic feet	
		3	200 cubic feet	
	Largest version (3200 cu ft lab)	2	2500 cubic feet	
		4	1700 cubic feet	
		6	900 cubic feet	
b.	MORL	Crew	90-day resupply	One-Year Mission
	Small MORL (1200 cu ft lab)	2	500 cubic feet	200 cubic feet
		3	150 cubic feet	-
	Intermediate MORL (2200 cu ft lab)	2	1500 cubic feet	1200 cubic feet
		4	700 cubic feet	0 cubic feet
		6	0 cubic feet	- cubic feet
	Large MORL (2900 cu ft lab)	2	2200 cubic feet	1900 cubic feet
		4	1400 cubic feet	700 cubic feet
		6	650 cubic feet	-
c.	Large MOSS	Crew	6-month resupply	One-year Mission
	33 ft dia Zero g Station	12	42,000 cu ft	40,000 cu ft
		18	40,000 cu ft	37,000 cu ft
		24	36,000 cu ft	33,000 cu ft
		36	30,000 cu ft	25,000 cu ft
	Hexagonal torus (rotating)	12	28,000 cu ft	27,000 cu ft
		18	26,000 cu ft	23,000 cu ft
		25	22,000 cu ft	19,000 cu ft
		36	16,000 cu ft	11,000 cu ft
	3 Radial module rotating station	12	30,000 cu ft	29,000 cu ft
		18	27,000 cu ft	25,000 cu ft
		24	24,000 cu ft	21,000 cu ft
		36	18,000 cu ft	13,000 cu ft

5. Payloads

The launch weight of a space station is primarily dependent on the payload-altitude capability of the chosen booster. If the desired orbital altitude and type of orbit are selected on the basis of such considerations as orbital lifetime, communications, and radiation shielding, a corresponding value of booster payload is known. This payload might consist of:

1) A complete station, including crew and re-entry vehicle.
2) A complete unmanned station.
3) A portion or module of a complete station for orbital assembly.

The case of orbital assembly is considered to be too sophisticated a technique for a station whose main purpose is to determine man's requirements for survival, and performance capability in the space environment and it is, therefore, discarded.

The choice between techniques 1) and 2) is critical, since, for example, with smaller stations (e.g., Saturn 1, 1B, Titan III C boosters) the re-entry vehicle plus crew weight is roughly one-third to one-half of station weight. Thus, to maximize the launch weight and therefore, the capability of a small space station, unmanned launch may be desirable. Obviously, where the re-entry vehicle is part of the space station itself, such as with the Extended Apollo, case 1) applies.

MORL type stations are assumed to be launched with two-man Gemini and adapter in place.

The MOSS space stations are assumed to be launched with one Apollo three to six man capsule and adapter in place. Initial manning of the stations is assumed to occur by shuttle vehicles having only passengers and negligible re-supply cargo capcity. The payload values presented in the summary curves, Figures 19 and 20 , will be augmented by the amount of cargo resupply at the time of resupply.

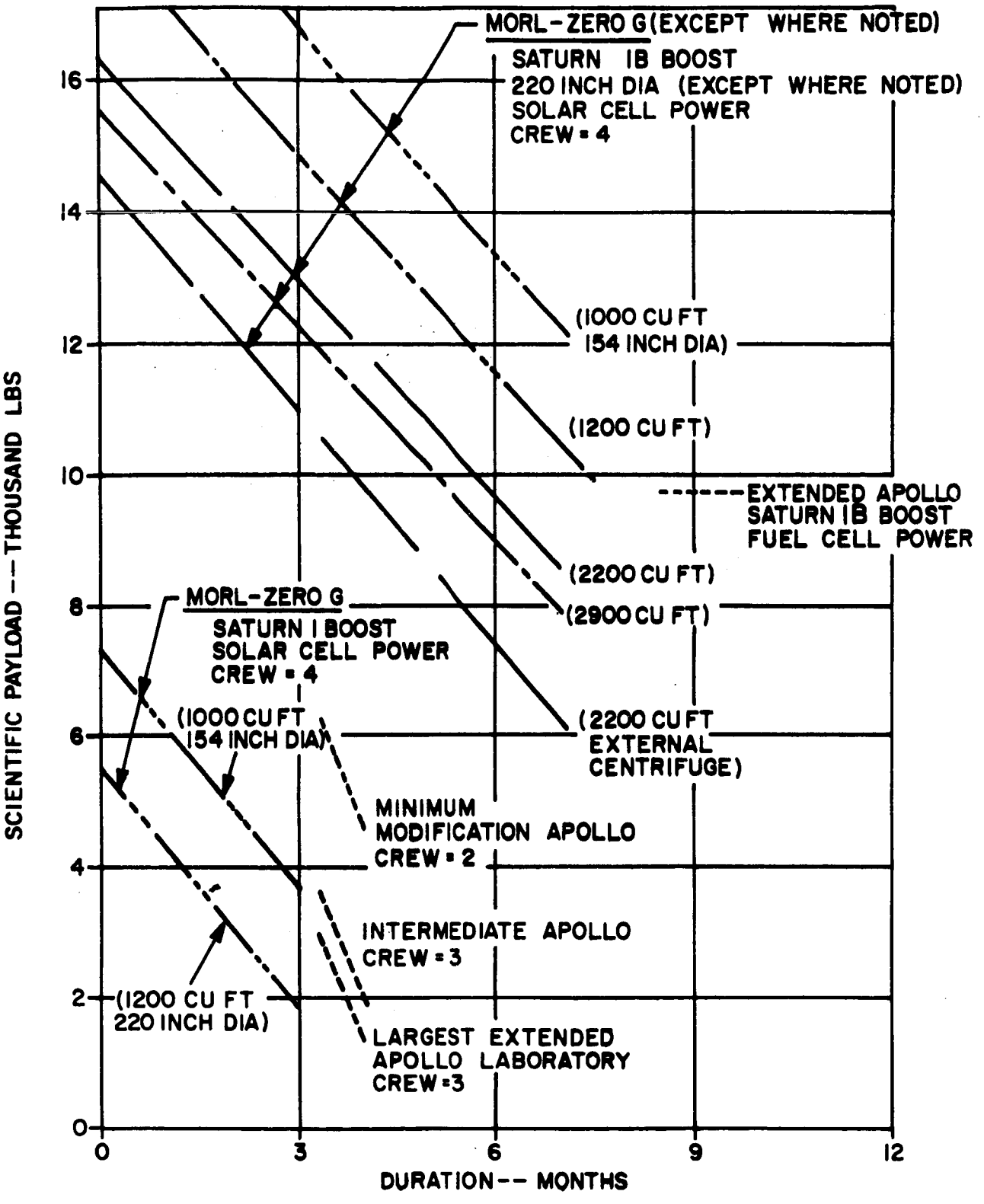

Figure 19. Experimental Payload Available - Small Space Station

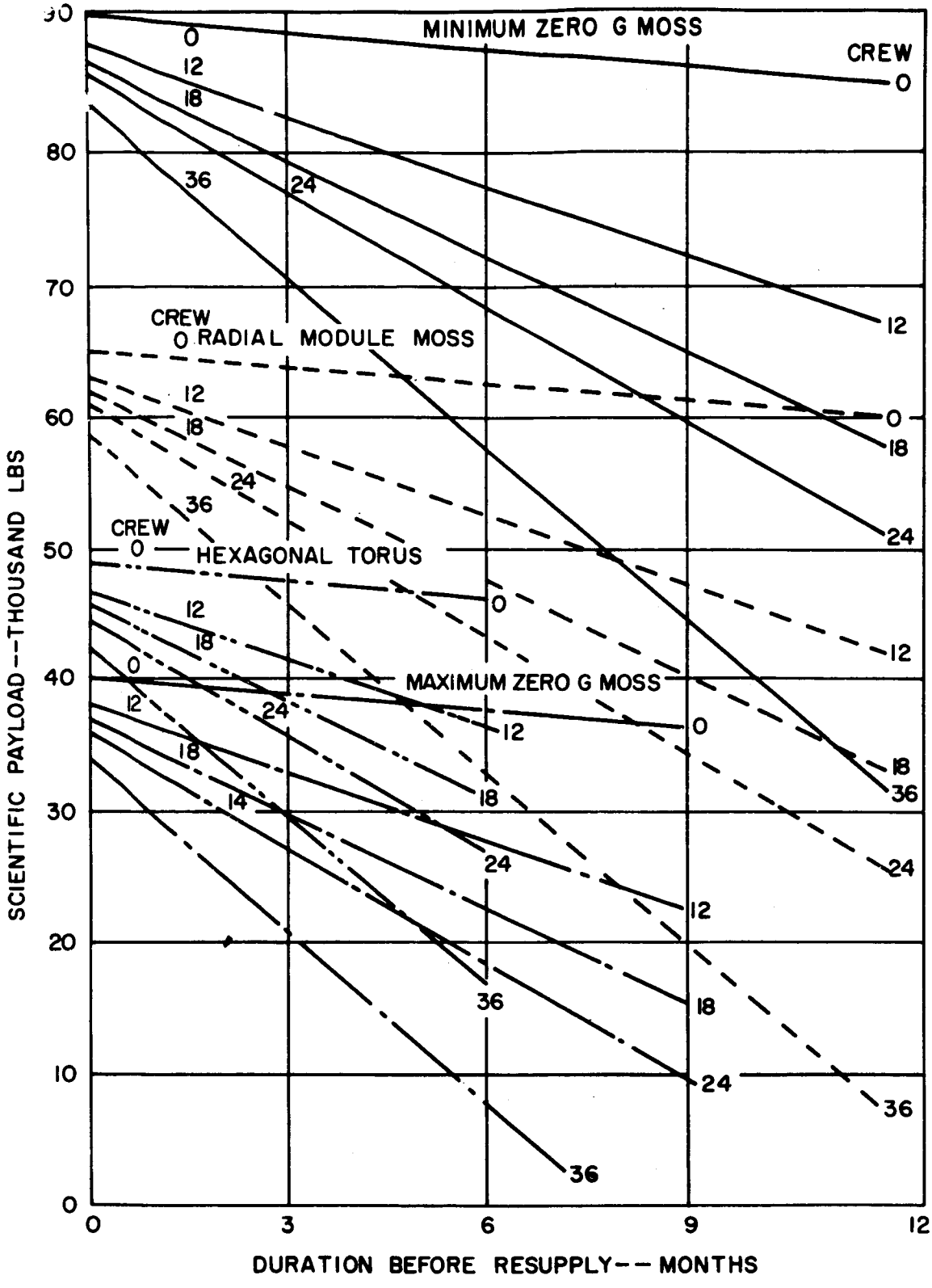

Figure 20 . Experimental Payload Available

For purposes of the study, all vehicles are assumed to be injected into a 30-degree inclination circular orbit, eastward from the Atlantic Missile Range at 250-260 nm altitude, using the most efficient technique of orbit injection.

The procedure used in estimating payload margin available for bio-experimentation was to subtract from the permissible gross weight at orbit injection the weight of the space station structure (plus re-entry capsules where applicable) and the estimated systems weights. This payload was reduced by the weight of consumables per day for the crew size and the anticipated life support and power systems for each station. One exception is the case of the minimum modification Extended Apollo, where volume limitations would reduce the payload from that calculated.

The resulting payload values are summarized in Table 40 for use in trade-off studies.

TABLE 40. SCIENTIFIC PAYLOAD SUMMARY

Space Station	Payload, lb		Crew
Extended Apollo (100-day duration)			
Saturn 1B Booster Fuel Cell Power			
Minimum modification (volume limited)	(6230)		2
Intermediate version (1300 cu ft)	3560		3
Largest version (3000 cu ft)	2920		3
A gain of 4000 lbs is anticipated with use of solar cells and a water recovery system.			
MORL (90-day resupply)	Saturn 1	Saturn 1B	
Minimum MORL (154"D) (1000 cu ft)	3750	16,750	4
Small MORL (220"D)('200 cu ft)	1900	14,900	4
Intermediate MORL (2200 cu ft)	--	13,000 (zero g)	
Intermediate MORL (2200 cu ft)	--	* 11,000 (External Centrifuge)	4
Large MORL (2900 cu ft)	--	12,300	4
Large MOSS (6-month resupply)	Minimum Station	Maximum Station	
Saturn 5 Booster			
33-foot diameter Zero g Station	77,500	27,500	12
	72,500	22,500	18
	68,500	18,500	24
	57,500	7,500	36
Rotating Hexagonal Torus (includes one command module)	36,000		12
	31,000		18
	27,000		24
	16,500		36
Rotating Three-Radial Module Station	52,500		12
	47,500		18
	43,000		24
	32,500		36

* No detailed calculations were made for the rotating dumbbell MORL configuration. The value, however, is expected to agree with that for the external centrifuge version.

6. Power Systems

The power system is closely interrelated with the life support system since, the environmental control system is one of the largest, if not the largest constant power loads, the power system can also supply such necessities as metabolic water (in the case of fuel cells). In addition, the selection and optimization of power system affects practically all aspects of a space station such as attitude control system (solar cells orientation), shielding (in the case of radioactive power sources), orbital lifetime (orientation of space station, and drag due to solar panels), and resupply logistics (in the case of mass-consuming systems).

First, the various types of power systems are reviewed and, afterwards, an estimate is made of power margin likely to be available for the various space station concepts.

Figure 21 indicates, generally, the useful regions of application for various power systems in terms of power level versus mission duration. Many factors that influence the choice of a power system for a specific mission are not taken into account in this figure, such as the interrelationship with the life support system.

The pertinent characteristics of the power systems discussed in Figure 21 are summarized in Table 41 . The approximate power level and the mission duration most suitable for each type of power system are given. Also given are the relative weights of each of the systems in their present state of development.

Figure 22 compares solar, nuclear, and chemical power sources by plotting system weights as a function of time for a power level of 5 kilowatts.

From the above the following general conclusions can be made:

1) It appears to be most advantageous to use primary batteries when power is required for relatively short intervals of time, such as a day. The use of storage batteries without a means of recharging does not appear to be practical for long duration missions.

2) Combinations of solar cells and nickel-cadmium batteries appear to be most suitable when about 2 kilowatts are required for several months or more. Non-oriented solar cell systems are useful for power levels up to approximately 100 watts, because in this case the weight and cost of the cells, which are not fully used, are not excessive. Oriented solar cells arrays appear to be more practical in terms of weight and cost for power levels greater than about 100 watts. There is evidence that silver cadmium cells cannot, in general, accept as high charging rates as nickel-cadmium cells, although they are improving. The silver-cadmium systems do have higher energy density and, therefore, are worth considering. Use of solar cell concentrators can double effectiveness of solar cells, reduce panel size and, thereby, help reduce costs, while flexible panels help to minimize stowage and deployment problems. On smaller space stations, rigid arrays on the walls of the station appear feasible and would tend to improve orbital lifetime.

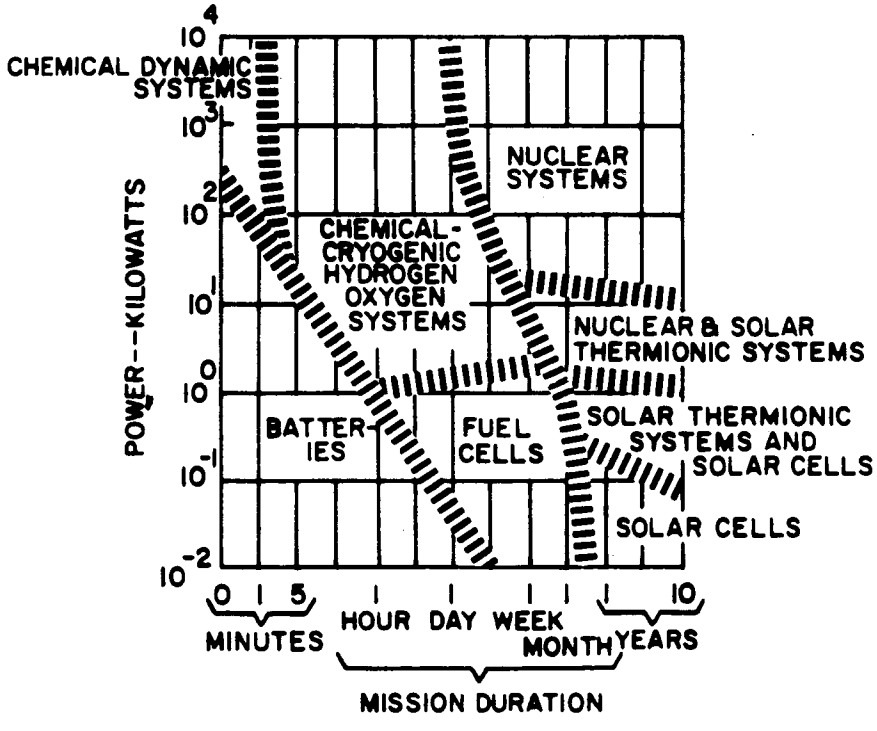

Figure 21. Application of Space Power Systems

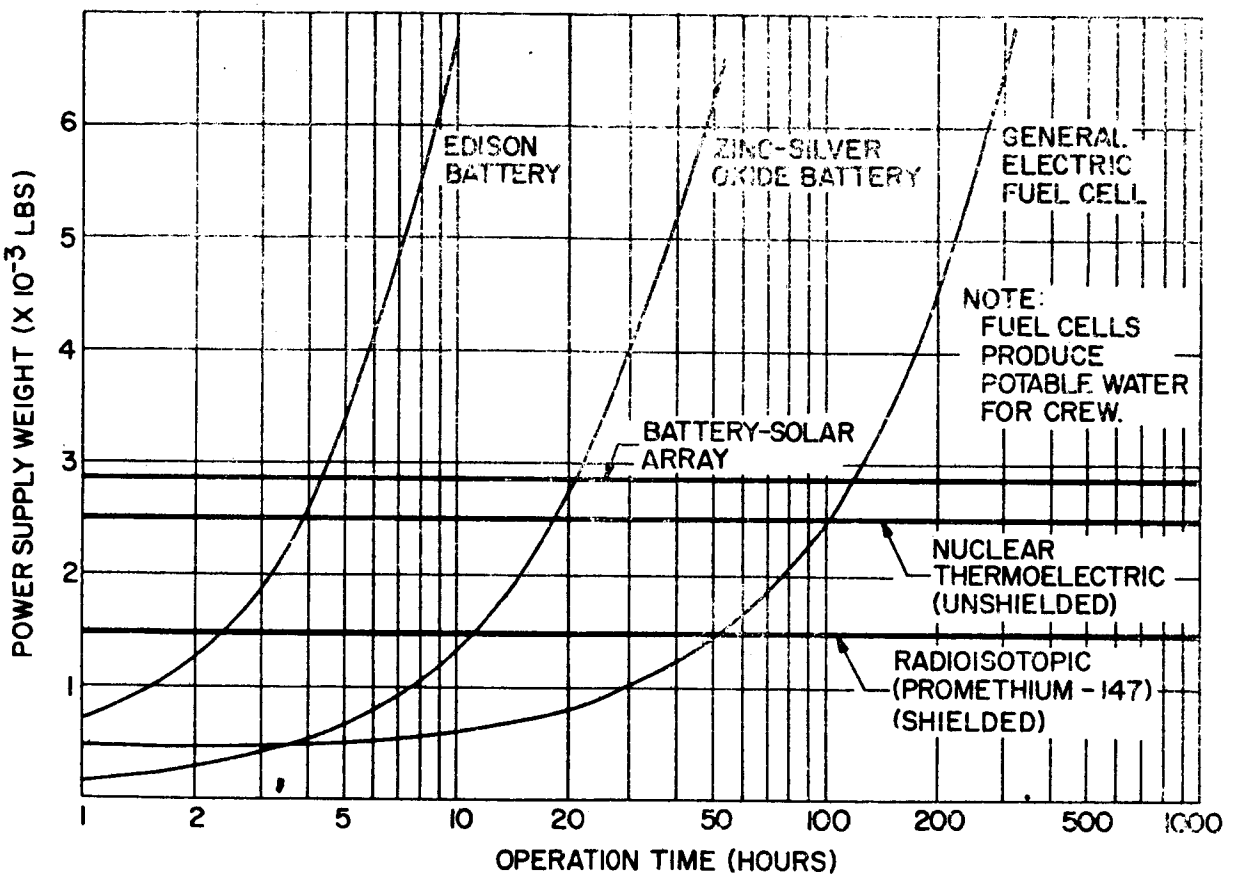

Figure 22 . Comparison of Power Systems at 5-Kilowatt Output

TABLE 41 . POWER SYSTEM CHARACTERISTICS AND APPLICATIONS

Power System	Power Level	Mission Duration	Relative Weight	Advantages	Disadvantages	Availability
Solar cell, nickel-cadmium batteries nonoriented	Less than 100 w	Greater than 1 month	1000 to 2000 pounds per kw	No orientation system required	Only about 25 percent of solar cells used at a time	Currently available
Solar cell, nickel-cadmium batteries, Sun-oriented	100 w to 20 kw	Greater than 1 month	250 to 1500 pounds per kw	--	Sun-seeker orientation system generally required,unwieldy expensive, in large panels	Currently available
Primary batteries	Less than 10 kw	Less than 3 days	45 to 80 watt-hours per pound	Simplicity	Limited energy capacity	Currently available
Fuel cells	Up to 2 kw	Less than 6 months	50 to 100 watt-hours per pound	Provide product motor	Operation is relatively complex; resupply problem	Some currently available
Solar Thermionic & Thermoelectric systems	0.1 to 20 kw	Greater than 1 month, less than 1 year	100 to 300 (thermionic) 300 to 500 (thermoelectric) pounds per kw	No fuel need be carried	Large size, difficult to launch and deploy Difficulty of achieving long lifetime at temperature	Under development: available 1 to 2 years
Nuclear Reactor and Radioistope systems	0.5 to 100 kw	Greater than 1 week	40 to 800 pounds per kw	Low weight of fuel required; solar energy not required	Large weight required for radiation shielding; radiation hazard; complex control	Some currently available
Chemical systems	Greater than 2 kw	Less than 300 hours	100 to 500 watt-hours per pound	Currently available; compactness	Fuel requirement prohibitive for long missions	Currently available
Microwave transmission systems	Less than 10 kw	Indefinite	--	No fuel need be carried	Large receiving antenna required; limited altitude, approximately 20 miles	Under development

3) Fuel cells are of interest despite an apparent weight penalty, since they can supply potable water requirements for the space station application. For a one-month resupply mission, the fuel cell system would weigh over six times that of the battery-solar array system, neglecting the free product water. Fuel cells, such as the hydrogen-oxygen type, would be the lightest (as shown in Figure 22) for mission situations in which several kilowatts are required for about 50 hours. These devices are relatively complex in operation compared with battery or solar cell systems. For long duration missions, attention must be paid to redundancy of fuel cells, and as the weight penalty could become prohibitive. Fuel cells require power to maintain temperature control while operating or on standby (in the case of the Pratt and Whitney fuel cells). In the case of Extended Apollo, there would be an inclination to retain the fuel cells for a power source in order to keep modifications to a minimun. The two fuel cells in readiness for space applications, Bacon-type fuel cell of Apollo is being supplied by Pratt and Whitney, and the ion-exchange membrane type fuel cell for Gemini is being supplied by General Electric. Qualification of either unit will be for two weeks of continuous operation.

4) Chemical power systems appear to be most suitable for short duration missions (lasting several hundred hours or less) during which power levels of 2 kilowatts or greater are required.

5) Solar thermionic systems appear to be a good choice when power levels from 0.1 to 20 kilowatts are needed for several weeks. The concentrators required for thermionic systems are large, and the electrical conversion systems (such as boiler-turbines) are complex. The solar concentrator must be stowed during launch and it must be deployed with a considerable amount of accuracy once in orbit.

6) Nuclear power systems offer the best prospects for situtations in which power levels from 0.5 to more than 100 kilowatts are needed for several months to several years. They offer compactness, long reliable life, and elimination of secondary batteries and sun orientation requirements. In addition, nuclear systems are relatively impervious to the hazards of space environment such as Van Allen Radiation, solar flares, and micrometeroids.

The principal disadvantage of nuclear systems for small power applications is the large weight associated with shielding the crew and payload against radiation. In addition, a complex control system is needed for the reactor and a heavy heat dissipation system is required. At higher power applications, it is competitive with other power systems for extended periods of use. Nuclear energy sources include fission and fusion reactors and radioisotopes. Fusion reactors are far beyond the state of the art, the latter two are, however, reasonably available.

The present SNAP reactor systems, which use the Rankine cycle, still have many development problem areas. The list below indicates some of their characteristics and planned availability dates.

SNAP Reactor Characteristics

	SNAP-10A	SNAP-2	SNAP-8	SNAP-50
Output kw (electric)	0.5	3	30-60	300
System wt (unshielded) lbs	525	1200	3000+	3000
Availability	1964	1965	1968	1970

For a 5 KW reactor, a 10,000 lb shield is required at a 70 ft separation distance.

Shielding weights are estimated in the neighborhood of 25,000-50,000 lbs for typical separation distances between a SNAP-8 reactor and the space station of 100 feet down to 50 feet, respectively.

The isotope system appears competitive with the solar-battery system in its range of effectiveness. While the nuclear reactor can be turned on once the vehicle has achieved orbit, the isotopic system must be in operation at all times.

At 5 KW, the isotopic system is lighter than either the nuclear reactor or the battery-solar array system as shown in Figure 2.

At 20 KW, the nuclear reactor and the radioisotopic systems approach each other in weight.

Up to the present time, radioisotopes as energy sources for space power have seen limited use in the low power SNAP units. The list below shows some of the characteristics of these units.

SNAP RADIOISOTOPE CHARACTERISTICS

	SNAP 1A	SNAP 3	SNAP 9A	SR-90 GENERATOR	
Output (watts)	125	3	25	120	300
System Weight (unshielded) lbs.	175	4	27	75	150-175
Fuel	Cerium 144	Polonium 210	Plutonium 238	Strontium 90	
Design Life	1 yr.	90 days	5-10 yr.	5-10 yr.	
Operational Date	Cancelled 1959	Demonstration 1959	Launch Oct. 1963	1966	

A highly promising power system has been under study by the AiResearch division of Garrett Corp. in Los Angeles, California and the Martin Company, of a radioisotope-powered, closed-Brayton cycle system which makes use of Prometheum 147, which is readily available.

The Pm-147 by itself would require practically no shielding. It emits a weak beta, 0.22 Mev maximum energy, and decays with half life of 2.6 years. However, as it is formed by fissioning of U-235, it undergoes nuclear reactions to form Pm-146 and Pm-148, both of which emit high energy gammas. Pm-148 has a 42 day half life and can be virtually eliminated by storing the reactor waste for about 2 years after encapsulation. Pm-146 will be present, however, because of its two year half life. It is this isotope which determines the shielding requirements. An estimated weight breakdown of a 5-kilowatt shielded system using Prometheum 147 is approximately 1450 lbs. This gives a specific energy of $\frac{5000}{1450} = 3.45$ watts/lb, or approximately twice the specific energy of the battery-array system. The isotope heat source is shielded to give an average dose rate throughout the space station of 4.6 mr/hr. This corresponds to an integrated dose of 10 rem in 3 months or 40 rem in one year. The shield configuration can be varied to meet the space ship requirements. One configuration gives an estimated shield weight of 453 lbs; the

shield thickness required is 0.79 inch of tungsten on the top face of the heat source, and 1.17 inch on the front face and the two sides. The bottom and aft faces of the source require no shielding.

For the large stations, it would be feasible to utilize four or more independent 5 kw units situated at the various module locations. This gives a total power system weight of 5800 lbs for 20 kw. For the small station, one 5 kw unit would be used, at 1450 lb, which is comparable to that of a solar array-battery system. The battery-array power system and the radioisotope power system appear comparable weightwise.

a. Power Requirements

Power system and utilization studies were performed on the following specific space station configurations:

1) A small station based on a simple cylindrical configuration design for 4 men.

2) A large station equipped to accommodate 24 men and consisting of an array of modules connected to a central hub.

For space stations of 3 months lifetime and over, solar and nuclear energy systems warrant serious consideration.

1) Small Space Station Power Requirements

An approximate estimate of the 4-man station in minimum average power (unconverted) requirement is as follows:

Power Needs	Wattage
Communications	267
Experiments (25 percent duty cycle)	467
Life Sustaining System	800
Stability and Control System	133
Cabin lighting, controls, displays, and miscellaneous items	133
TOTAL	1800 watts

The average maximum power level is expected to be 4 kw for the 4-man MORL space station, with a battery standby power capability of 2 kw. Minimum average power level will be approximately 2-5 kw for this 4-man MORL space station. Present day solid state power regulator-converter units have achieved 80-90 percent efficiency of operation at the designed load conditions. However, since the efficiency falls off with partial load, a conversion efficiency of 75 percent is realistic.

2) Large Space Station Power Requirements

An over-all estimate of the station average unconverted power requirements is as follows for various crew sizes assuming a 27 kw level of power available.

27 Kilowatts Maximum

Communications	300 w
Stability and Control	200 w
Miscellaneous (lighting, food preparation, etc)	500 w
TOTAL	1000 w

Balance = 26 kw for E.C.S. and experimentation.*

TABLE 42. ECS POWER REQUIREMENTS AND EXPERIMENTATION BALANCE

	Power Available			
	Without O_2 Regeneration		With O_2 Regeneration	
Crew Size	ECS, KW	Expt. Bal. KW	ECS, KW	Exp. Bal. KW
6	1.94	24.1	5.9	20.1
12	3.88	22.1	11.8	14.2
18	5.82	20.2	17.7	8.3
24	7.76	18.2	23.6	2.4
36	11.65	14.3	35.3	-

* The ECS is considered to have urine distillation and waste water reclamation capability, with or without Oxygen regeneration.

Experimentation power availability is plotted as a function of crew size in Figure 23 for MORL-type stations, Extended Apollo, and large space stations. In actual designs, the position of these curves will be affected by power management as well as by certain system decisions.** An important example of the effect of system decision is the case of Extended Apollo, where deletion of Guidance and Navigation equipment assuming passive rendezvous permits the large increase shown in power available for experimentation.

The maximum station power available with each space station concept is not firmly fixed although the following levels are indicated from the various space station programs:

Extended Apollo	1.5 kw
MORL	2.5 kw - 4 kw
MOSS	27 kw
MOSS (growth)	40 kw

7. Environmental Control Systems

The specifications governing the space station environmental control system are of prime importance in determining the available payload and power for experimentation. Parametric studies have been made of the fixed weight, fixed weight per man, E.C.S. power required per man, and the weight of expendables, all as a function of mission duration (or E.C.S. optimum design duration).

** With power management, for a 24-man (zero G) space station with O_2 regeneration, the experimentation power available can be roughly doubled from 2.4 kw to 5 kw. For a growth version, with a 40-kw power capability, the corresponding numbers would be 2.4 + 13 = 15.4 kw and, with power management, as much as 28 kw.

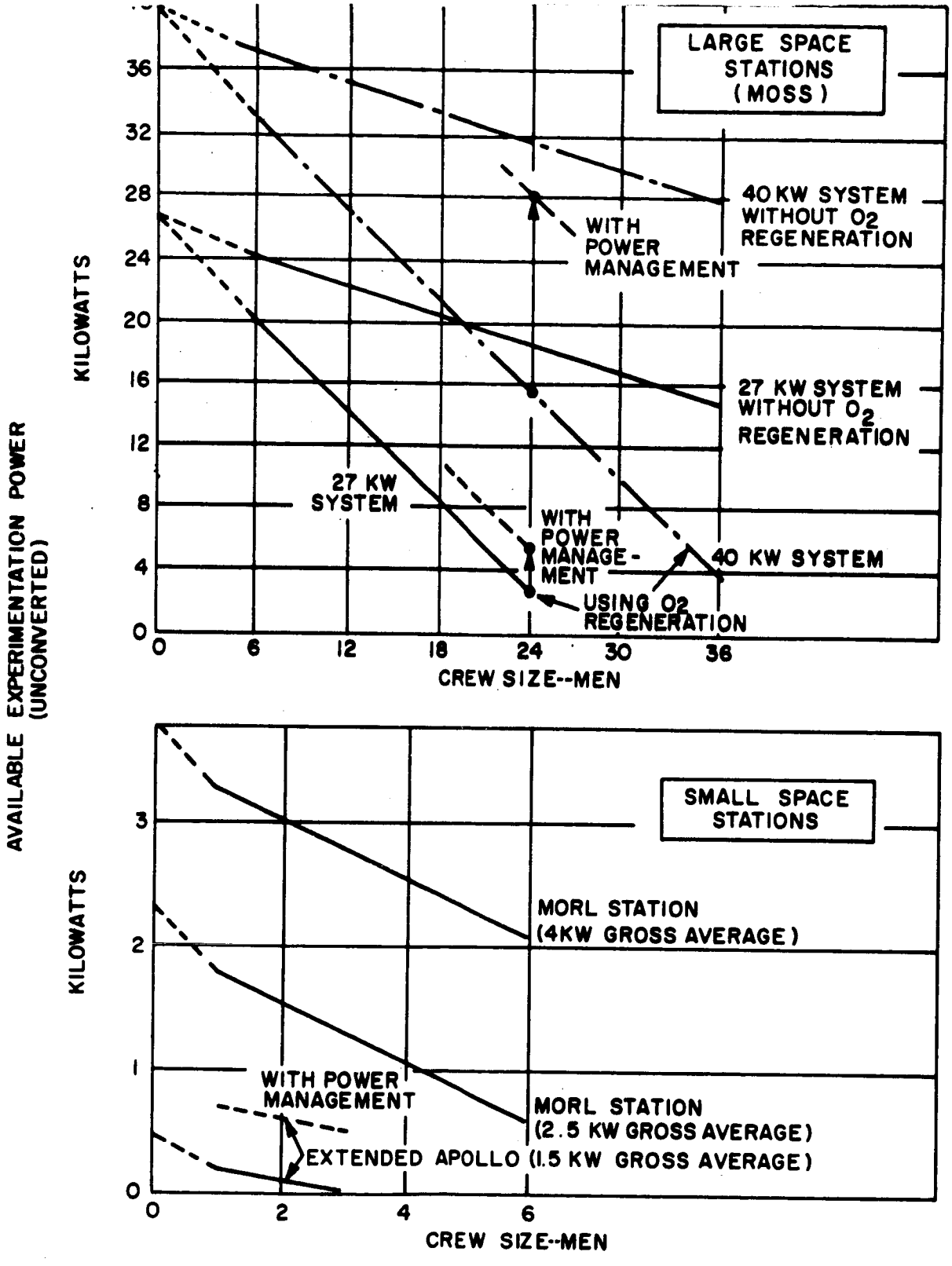

Figure 23. Power Available for Experimentation

A closed ecological system is defined as a boundary within which life processes can function indefinitely with only energy crossing the boundary. That is, no mass expenditure is involved - all processes are regenerative. Mass expenditure is taken to mean either mass lost across the boundary of a vehicle or mass converted from a usable state to an unusable state; i.e., saturation of an absorbant bed, or depletion of a primary storage battery.

The definition of a "closed" system serves as a useful tool, since it represents a base or ideal condition to which real systems can be quantitatively compared. This tool enables quantitative measurement of degree of system closure beyond the generally used expressions - "open," "closed," "partially closed." It has been found useful to measure system closure in terms of pounds of weight expended per man per day. Further, because of considerable integration between the Auxiliary Power System and Life Support System for such vehicles as LEM, Gemini, and Apollo, it is difficult to determine to which system the mass expenditure is chargeable. Consequently, this study combines the two systems without attempting to treat the two separately. By so doing, a clear and consistent trend (for space vehicles) of degree of system closure vs. design mission length emerges. This relationship is shown in Figure 24. The expendable weight includes metabolic water, oxygen, food, thermal control, fuel for power, CO_2 collection, ador absorption, trace contaminant treatments, and leakage replenishment.

The trend in the curve is so well defined that interpolations and even extrapolations of the curve appear justifiable although it should be kept in mind that the trend is really a series of discrete steps rather than a smooth variation.

A large number of points on the curve are based on actual systems, including Dynasoar, Mercury, LEM, Gemini, and Apollo. Others such as Stratolab and Langley MORL Space Station are based on detailed studies. Inaccuracies are expected only in the longer mission time regime where less detailed analyses exist.

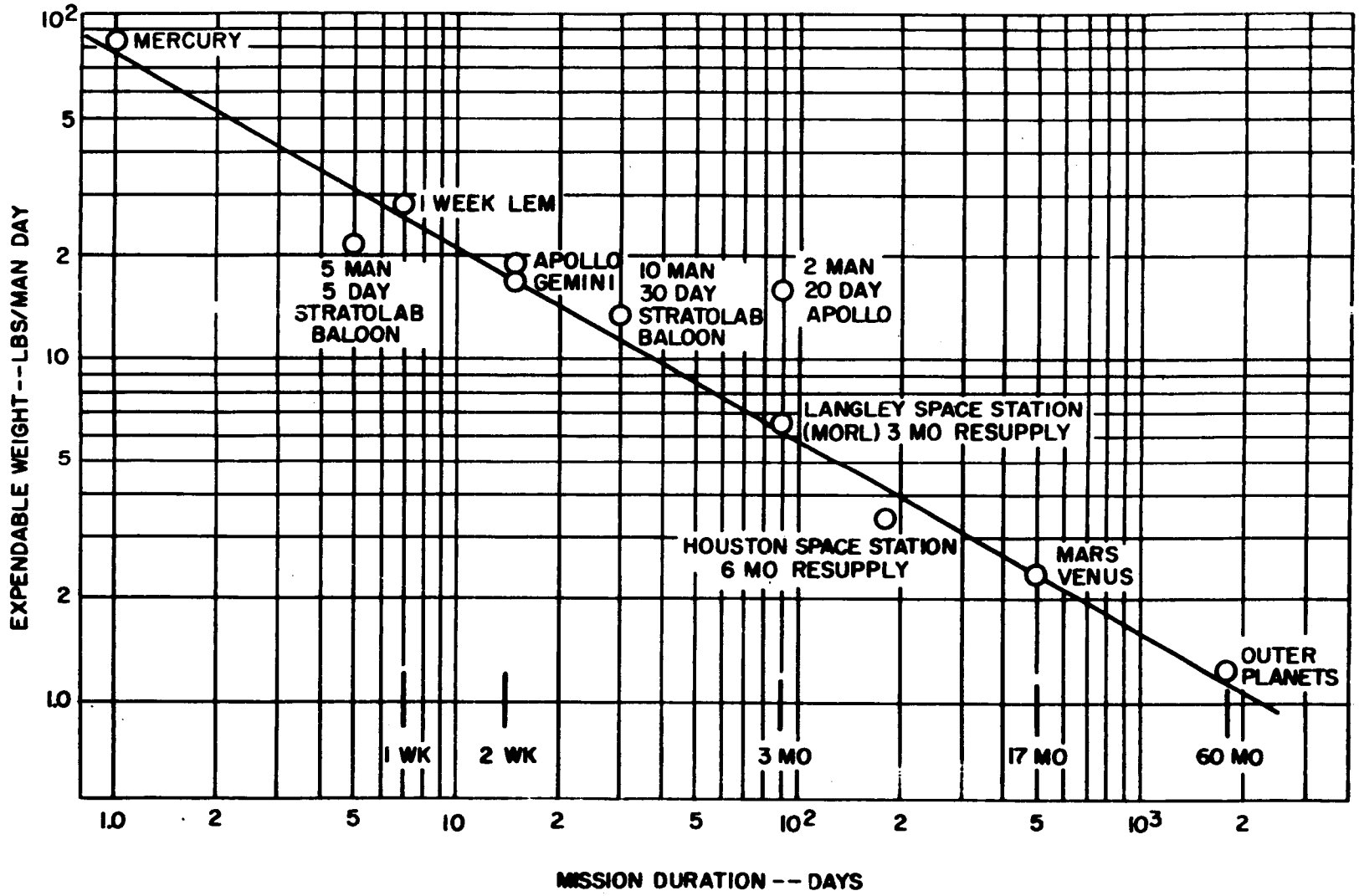

Figure 24. Effect on Mission Duration of Expendable Weight per Man Day

Since the majority of the points defining the curve are based on actual systems, and since each system design received, by respective contractors, a thorough optimization study based on available technology within the program time period, it is safe to assume that the curve presented in Figure at least approximately represents the optimum degree of system closure as a function of mission time.

In the case of vehicle systems designed for periodic resupply, it is assumed that systems optimization are based upon the resupply period rather than the ultimate life of the vehicle. This will, of course, result in greater total weight (fixed weight plus expendables) when viewed from the final lifetime of the vehicle. It does, however, appear justifiable in practice because of the lesser development requirements within the program time period and the lower initial fixed weight at vehicle (space station) launch. This last consideration appears to be a potentially critical one in early space station programs where orbital launch capabilities are limited to the range of 20,000 - 30,000 pounds. In fact, it is conceivable that a less than optimum system might be employed in order to reduce initial launch weight.

Each point on the curve was determined as a summation of the known or estimated consumption of each of the expendable items. Consequently, it is probable that a more accurate total number is available than if each vehicle system were estimated grossly.

Table 43 presents a summary of the characteristics and expendable items for the three space station concepts of particular interest to the present program.

The summary curves for fixed weight and fixed weight per man versus mission duration are given in Figures 25 and 26 . The ECS power required per man is presented in Figure 27.

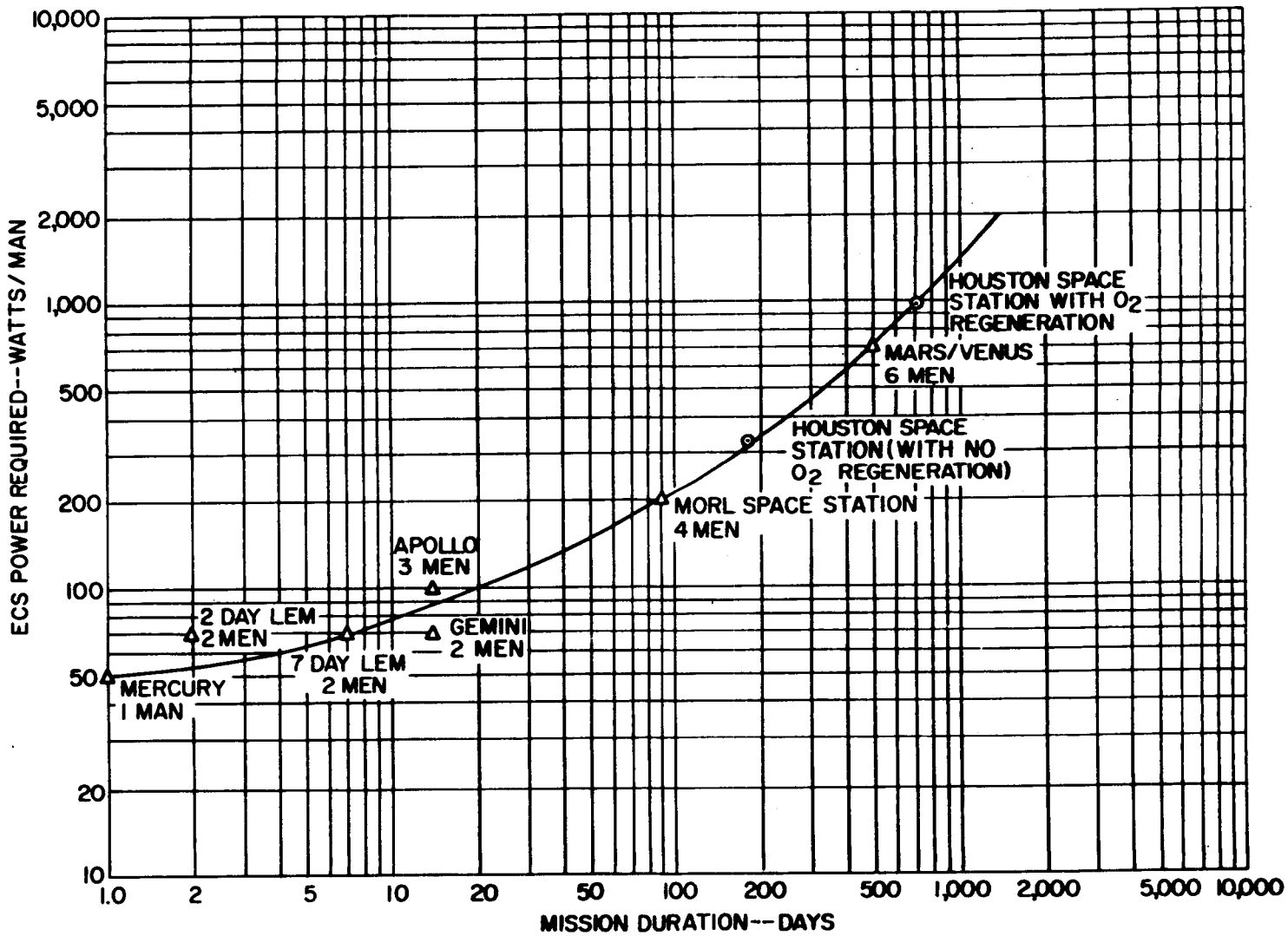

Figure 25 . Effect of Mission Duration on ECS Power per Man

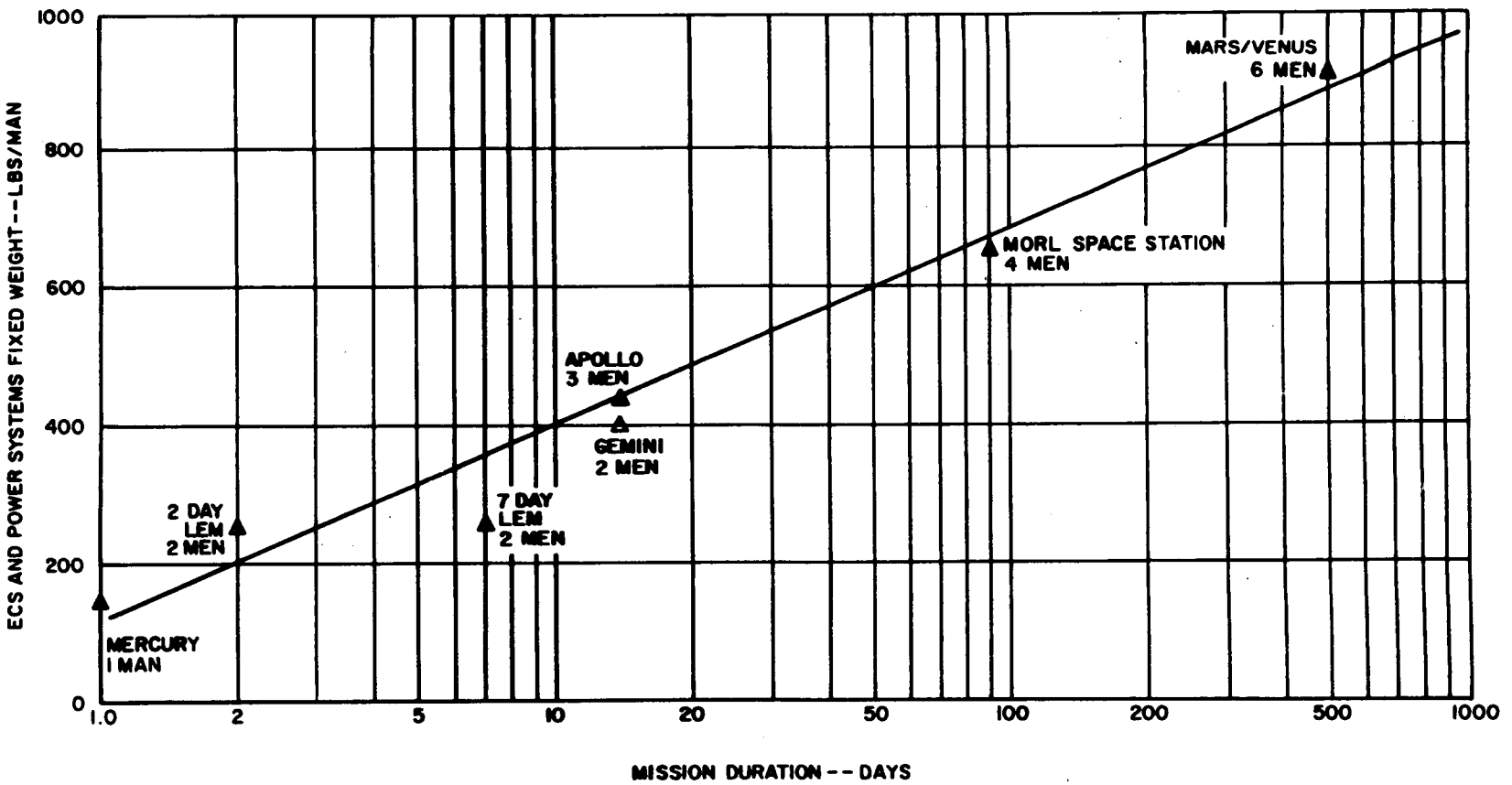

Figure 26 . Effect of Mission Duration on Fixed Weight per Man of ECS and Power Systems

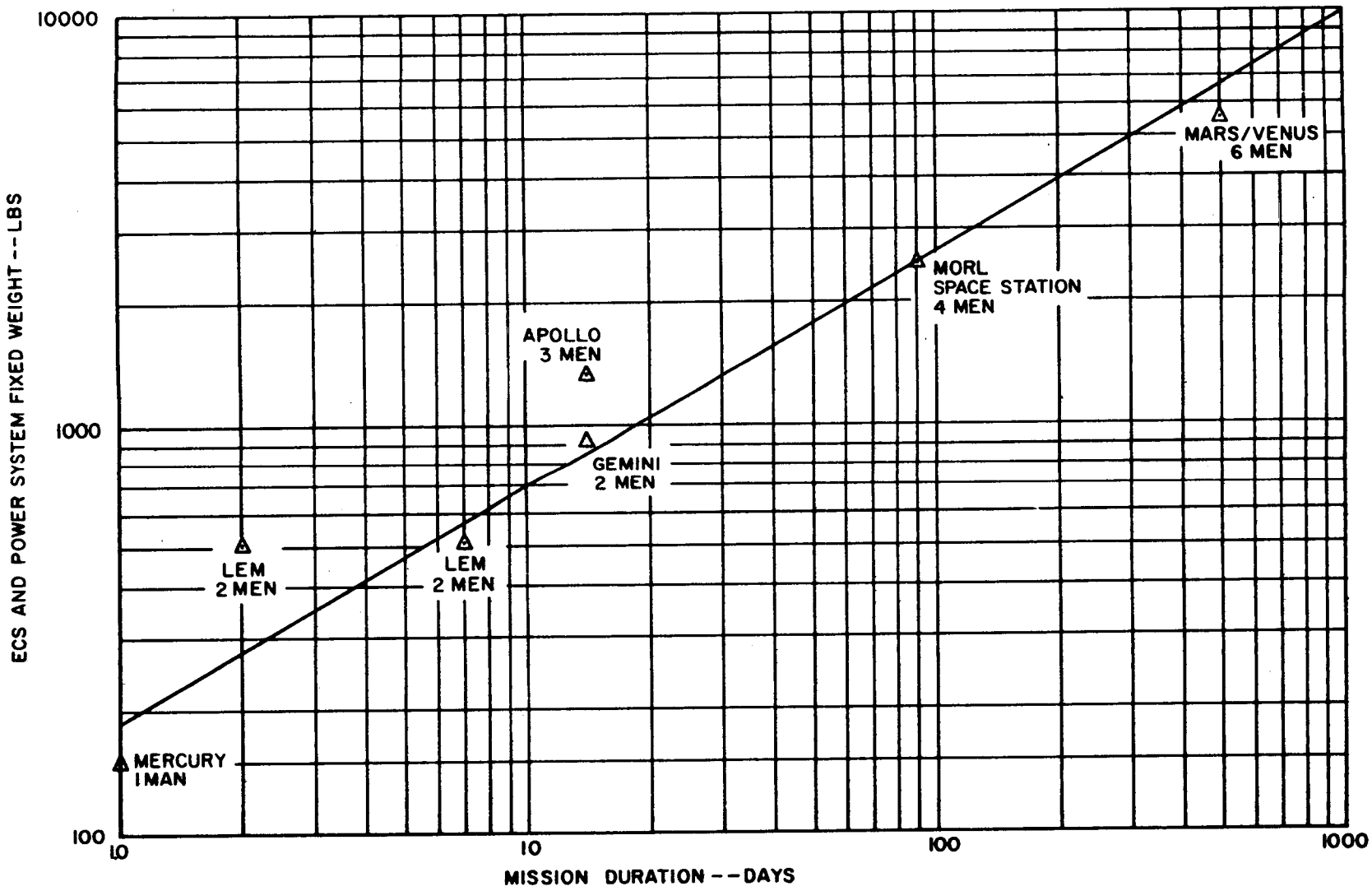

Figure 27 . Effect of Mission Duration on Fixed Weight of ECS and Power Systems

TABLE 43. COMPARISON OF EXPENDABLES

Program	Apollo Space Station 2 Men			Langley Space Station 4 Men			Houston MOSS Space Station 20 Men		
Mission Length	90 Days			90 Days Resupply Note(1)			6 Months Resupply		
Expendable Function	Closure	Use Rage lb/man day	Method of Function	Closure	Use Rate, lb/man day	Method of Function	Closure	Use Rate, lb/man day	Method of Function
Thermal Control	Closed	0	Radiator	Closed	0	Radiator	Closed	0	Radiator
Power (Fuel)	Open	8	Fuel	Closed	0	Radiator	Closed	0	Radiator
Water Metabolic	Open	Note (2)	Cell	Closed	0.54 Note (3)	Distilla-tion.	Closed	0.19 Note (4)	Distillation
CO_2 Collection	Open	2.8	LiOH	Closed	0.5 Note (5)	Molecular Sieve	Closed	0.4 Note (6)	Molecular Sieve
Metabolic O_2 Supply and Tanks	Open	2.2	Cryogenic Storage	Open	2.2	Cryogenic Storage	Closed	0.5 Note (7)	Methanation
Odor Absorption	Open	0.5	Charcoal	Open	0.5	Charcoal	Open	0.5	Charcoal
Trace Contaminants	Open	0.1	Catalytic Burner	Open	0.1	Catalytic Burner	Open	0.1	Catalytic Burner
Leakage and Tanks	--	1.2	--	--	0.5	--	--	0.1 Note (8)	--
Programmed Repressurization & Airlock Utilization	--	0 Note (9)	--	Open	0.7 Note (10)	--	Closed	0.1 Note (11)	--
Food & Container	Open	1.4	Freeze Dried	Open	1.4	Freeze Dried	Open	1.4	Freeze Dried
TOTAL LB/MAN DAY		16.2			6.44			3.29	

NOTE:
(1) Systems optimized around 90-day resupply period to minimize launch weight and considering launch time period.
(2) Assumes power level reduced (for long term operation) to that equivalent to 8 lb/man day product water.
(3) Assumes no fecal water recovery and mass efficiency of 0.90 of distillation system, and food content water = 0, Mass efficiency of filter = 0.98, H_2O available = 10 lb/man day, wash and urine H_2O through distillation system.
(4) Assumes no fecal water recovery, mass efficiency of distillation system = 0.95, mass efficiency of filter = 0.98, food H_2O = 0, available H_2O = 10 lb/man day, wash and urine through distillation system.
(5) Based on 2 lb/man O_2 consumption where 80% appears as CO_2 and 20% as metabolic H_2O, mass efficiency of molecular sieve assumed = 0.94 (absorbant replacement).
(6) Assumes continuing development of system to reduce requirements for absorbant bed replacement.
(7) O_2 by H_2O electrolysis. H_2O provided by methanationof CO_2, methane rejected.
(8) Assumes same leak paths as Langley station.
(9) None programmed.
(10) Based on 1 airlock utilization/day without airlock pumping system.
(11) Assumes airlock pumping system.

The following is a list of desirable environmental conditions for carrying out the experimental program.

ENVIRONMENTAL STANDARDS

Atmospheric temperature		72 ± 5 degrees F
Atmospheric Pressure		7.5 to 14.7 psi
Atmospheric Composition	(7.5 psi)	45% O_2, 56% N_2
	(14.7 psi)	20% O_2, 80% N_2
Minimum Ventilation Rate		2 ft^3/min/man
Air Circulation Velocity		15 - 40 fpm
Temperature - Time Gradient		0.1 degrees F/min
Local Temperature - Distance Gradient		0.5 degrees F/ft
Atmospheric Humidity		50% ± 15% at 70° F
Carbon Dioxide		less than 0.5%

RECOMMENDED ILLUMINATION LEVELS

Location	Illumination - Foot Candles
Passages, Storage, Eating Areas	2 - 5
Washrooms, General Living Areas	15
General Laboratory Work Areas	30
Detail Work Areas	50
Fine Detail Work Areas	80

8. Orbital Lifetime

All space station categories are required to meet certain minimum orbital lifetimes. Typical objectives are tabulated below:

Extended Apollo	100 days - 1 year
MORL	1 year - 2 years
Large MOSS	1 year - 5 years

The most reliable solution to the lifetime problem is to keep equivalent flat plate area of the space station configuration small and the orbit injection altitude as high as possible within booster capability and with consideration of the shielding weight penalty. An alternate approach is to supply an on-board propulsion system capable of compensating the decay of altitude due to configuration drag. In this case, the ideal theoretical condition is to continuously thrust to overcome drag. However, there is an extreme problem in obtaining necessary propulsion nozzle life. Another possibility is that of using a propulsion stage associated with a resupply vehicle to apply impulse when docked.

From examination of the various space station configurations, it appears that optimum orbit injection altitude will generally be between 200 and 250 nautical miles considering payload, radiation, shielding and lifetime factors. It should be emphasized that artificial radiation belt shielding may decay significantly in the future and may not remain so important a factor, unless high-altitude atomic testing is resumed.

Another major consideration in the determination of orbital lifetime is the effect of density variations at orbital altitudes resulting from solar activity. Thus, if the space station is launched at a time of peak solar activity (approximately 1969), the orbital duration is likely to be a fraction (roughly half to two-thirds) of that in a quiet sun year.

The calculations of lifetime were made for the space stations assuming random orientation relative to the orbital path, such as would accompany a solar-oriented solar cell-equipped station. In the case of fuel-cell, nuclear-dynamic or radioisotope powered stations, cleaner configurations oriented along the orbital path are anticipated and, therefore, higher lifetimes are anticipated.

The aerodynamic drag coefficients (C_D) for the various space station configurations are based upon free-molecular flow of gases. These coefficients are consistent with "simple-shape" data. The equivalent flat-plate area (C_DA) and ballistic coefficient (W/C_DA) were then established for the nominal payload (W) of each space station. The orbit decay time (T_D) to an altitude of 50 nautical miles is determined from the ARDC Model Atmosphere of 1959.

The results are tabulated for various configurations in Table 44 and plotted in Figure 28 as orbital lifetime versus ballistic coefficient (W/C_DA). It is apparent that most configurations will meet a one-year duration objective with this atmosphere. Exceptions to this are the large, solar-cell equipped rotating configurations: the three-radial-module and the hexagonal torus configurations, as well as the missile-shaped G.E. laboratory, Reference 140. The difficulty is removed in the latter case (lifetime increased to 560 days) if an orbit aligned configuration is used. A similar result occurs when the large zero g MOSS is aligned to the orbital path (as a missile). In this case, lifetime is extended to 5 years.

The removal of solar cell panels as a power source for the large rotating space stations alleviates the lifetime problem to some extent. In the case of the hexagonal torus, if it is earth oriented, the lifetime increases by a factor of 2.5. The radial module lifetime, earth oriented, increases by a factor of 1.7. The lifetime for the large Y earth oriented, orbit aligned, increases by a factor of about 2.8 giving about 2.4 years.

The indications from this study are, therefore, that large radial station configurations require station-keeping propulsion units and drag minimization. Earth orientation of the major portion of the vehicle is desirable. Launch of a station should be scheduled for a period of relative solar inactivity, when upper atmospheric density is low.

9. Structural Design

There is no feasible measure of the effectiveness of a given space station structural layout in performing the necessary experimentation program.

TABLE 44. VEHICLE AND ORBIT DECAY PARAMETERS

Design Outline		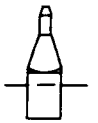			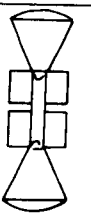	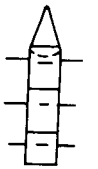		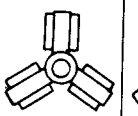	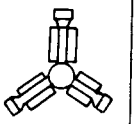
Configuration	Apollo & Service Module	MORL (Lab & Gemini)	MORL (Lab & Apollo)	G. E. Zero-G Lab	Two-Apollo Dumbbell	Large Zero-G Station	Hexagon Station	Three Radial Module Moss	Large Rotating Y
Launch Booster	Saturn I	Saturn I	Titan IIIC	Titan IIIC	2-Saturn I	Saturn 5	Saturn 5	Saturn 5	Saturn 5
Referenced Projected Area (A, sq ft)	140	350	350	1018	827	2940	8885	9605	5250
Effective Drag Coefficient (C_D)	2.3	2.86	2.67	2.67	2.87	2.7	2.5	2.4	2.6
Equivalent Flat-Plat Area (C_DA, sq ft)	322	1000	935	2720	2380	7900	22,200	23,000	13,700
Nominal Payload (W, lbs)	20,000	20,000	26,000	26,000	40,000	230,000	230,000	230,000	230,000
Ballistic Coefficient (W/C_DA, psf)	62	20	27.7	9.5 *30.8	16.8	23 *100	10.4 *26	10 *17	16.8 *44
Orbit Decay Time (t_D, days: from 250 nm, altitude to 50 nm)	1350	380	500	190 *570	340	380 *1900	200 *480	195 *325	315 *880

*Axial Orientation, without external solar panels.

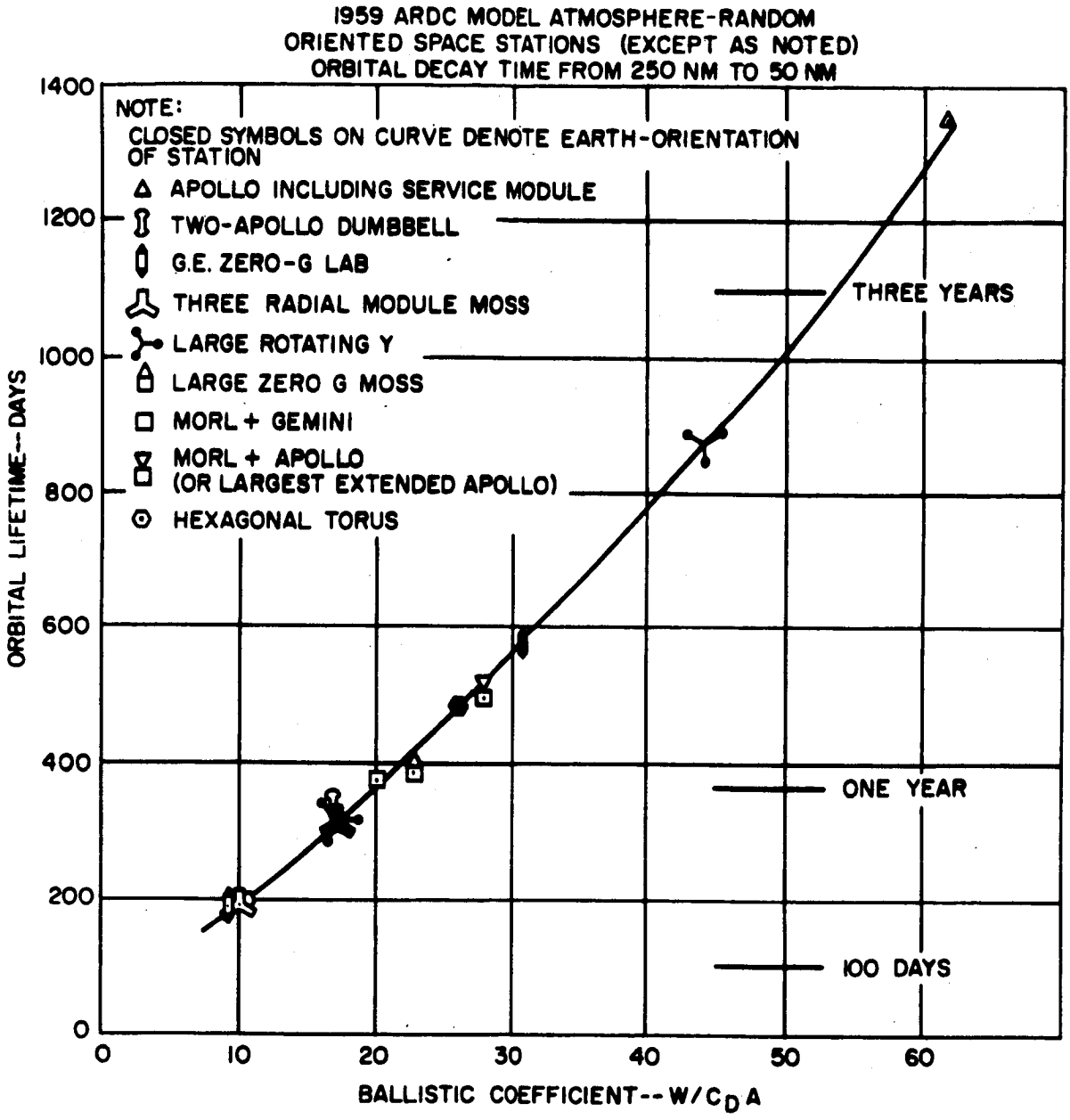

Figure 28 . Orbital Lifetime for Various Space Station Configurations

Interior design is an important problem area which, it appears, may only be settled by orbital experience, Considerable attention should be given to the effect of space station layout on routine operations within the various sections of a space station. The primary design question is whether a rotating complete station is necessary, desirable, or tolerable in contrast with a zero g station having a part-time centrifuge (internal or external).

Common to any satisfactory design will be leakproof construction details with a versatile outer skin.

An aluminum-foam sandwich skin is expected to be the representative choice from the standpoint of reliability, strength-to-weight ratio, secondary radiation characteristics, and meteoroid protection. The typical sandwich is a two-inch thick stabilized skin structure having a 0.040 aluminum outer skin (which also acts as a meteoroid bumper) followed by 4 lbs/cu ft polyurethane foam and an inner 0.072 aluminum wall. The shell would probably be reinforced with longerons and frames.

During launch trajectory, the bumper skin is exposed to temperatures in the neighborhood of 400°F, which suggests the need for coating the outer surface with protective paint.

The foam filler serves the purposes of shell skin stabilization, insulation, and meteoroid energy dissipation. Structural heat load and wall temperature are controlled by passive means such as the insulation and surface coatings. Internally, active control is obtained by the cabin atmospheric control system.

Structural dynamics must be investigated for all phases of the lifetime of of the station from ground handling through launch and orbit injection (and erection if applicable). All disturbances such as station and machinery spin-ups and personnel and cargo movements should be taken into account. Oscillatory structural deformation, resonances of large components, docking and ejection of supply capsules are also important for structural dynamics investigation. Vibratory motion should be restricted to limits tolerable to the crew, such as those limits presented in the human response section.

10. Radiation Shielding

The space station biological shielding requirements for protection from the artificial radiation belt made by the Starfish explosion are presented here. The radiation belt decay since the time of the explosion (mid-July 1962) was measured in early November of 1962. Dose rates based on the latter information are reported in the human response section and here.

The local shielding required in a 260 nm -30° inclination orbit is in the range of 7-9 lb/ft^2, based on an allowable skin dose rate of 0.1 Rem/day.

The decay in the artificial radiation belt from the time of the explosion and early November 1962 was quite substantial according to Hess, Reference 141. The belt is still decaying, but not as rapidly. The data utilized herein are, therefore, presented as an interim result. It is expected that these data will be fairly representative of fluxes to be encountered in the near future.

Uncertainties in the experimental data have necessitated the use of estimated upper and lower bounds to the vehicle encountered fluxes. It should be noted that these bounds are estimated, and not actual. These limits are used in the calculations and result in similar bounds being imposed on the resulting shielding requirements.

The selected orbit is characterized by the parameters presented in Table 45.

TABLE 45. ORBIT PARAMETERS

Eccentricity	0
Altitude	260 nm
Period	94.2 min
Inclination	30°

Combining the orbital parameters with the data presented by Hess yields the total electron flux encountered by a satellite during a typical day. A satellite in the above orbit will encounter an integral electron flux (of greater energy than 0.2 Mev) which is between the bounds of 3.1×10^{10} and 7.8×10^{10} electrons/cm^2-day.

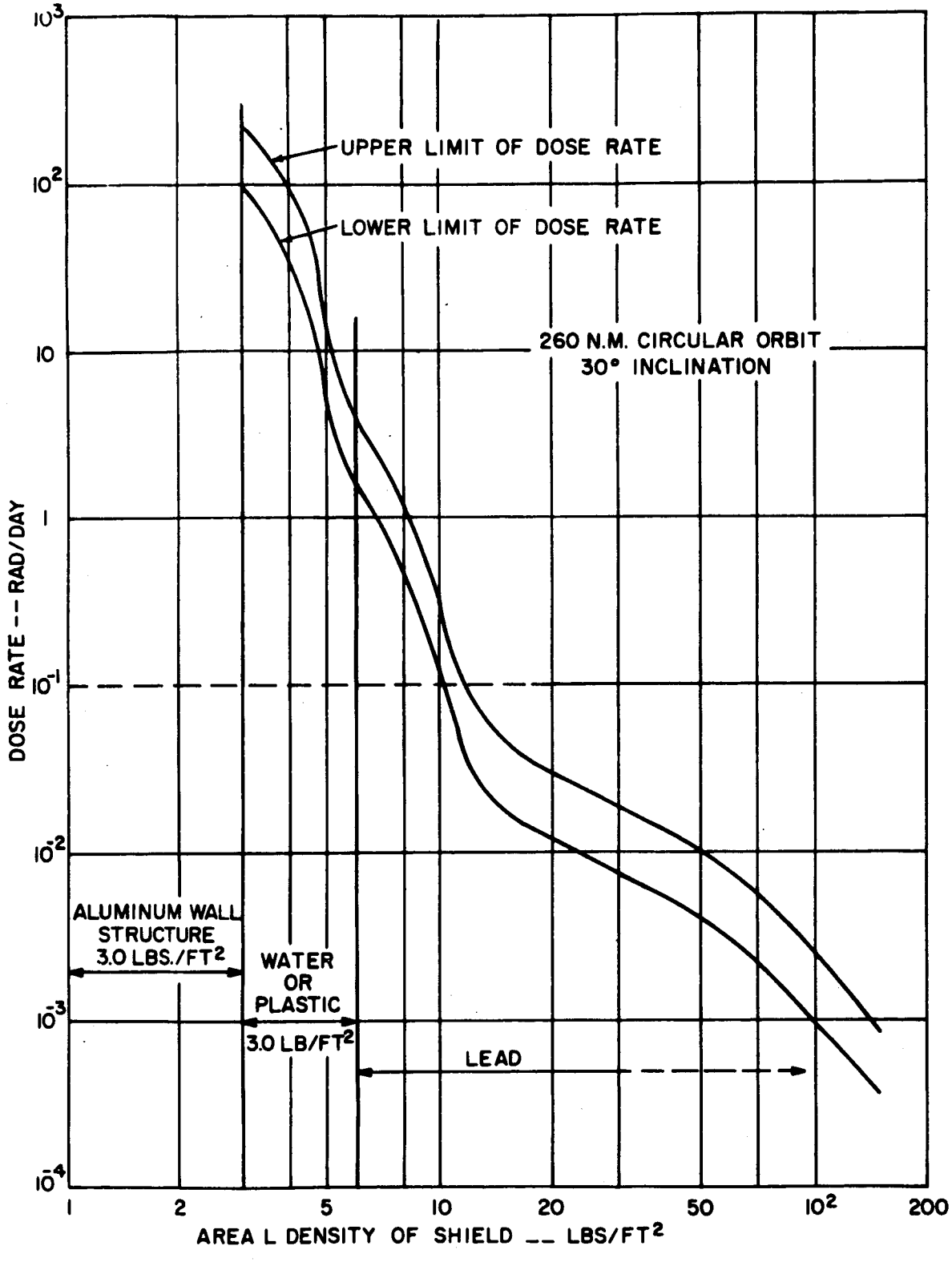

Figure 29 . Effect of Shielding on Dose Rate in Artificial Radiation Belt

The data provided by Hess, do not exhibit a true fission-product decay - beta spectrum. The Hess spectral distribution was used in calculations of dose rate.

The bounded total electron dose rates as a function of shield thickness are depicted in Figure 29 .

Allowable dose rates were taken as 0.1 Rem/day. Using the data presented in Figure 29 , it is possible to determine the shield thickness necessary to meet this requirement. A vehicle in the assumed orbit will require local shielding of between 7 to 9 lbs/ft^2 in addition to basic wall structure of 3 lbs/ft^2. The local shield would consist of 3 lbs/ft^2 of water or plastic outer layer and between 4 to 7 lbs/ft^2 of lead inner layer.

In order to obtain a dose rate as low as 0.01 Rem/day, which is the acceptable value for radiation workers, local shielding of between 22 to 47 lbs/ft^2 would be required in addition to the basic wall structure.

It should also be noted that if no local shielding were provided, the dose rate would be between 95 to 230 Rem/day.

11. Resupply and Logistics

From the economic standpoint, it would be ideal to optimize the experimental space station and its systems for its required orbital lifetime and to supply the station with all consumables to meet this duration. This approach would obviate the expense of successive launches for resupply and crew exchange. However, the nature of the experimental mission requires periodic crew transfers.

The current and projected vehicles for logistics and resupply are given in the following tabulation, along with approximate cargo weights.

	BOOSTER	PERSONNEL	CARGO, LB 250 nm Orbit
Agena D	Atlas	0	5300
Gemini	Saturn I	2	8000
Gemini	Titan IIIC	2	10,000
Gemini	Saturn 1B	2	20,000
Apollo	Saturn 1	3	6000
Apollo	Saturn 1B	3	16,000
Apollo	Saturn 1	4	4800
Apollo	Saturn 1B	4	14,600
Modified 6-man Apollo	Saturn 1B	6	12,000
12-Man Lifting Re-entry Vehicle	Saturn 1B	12	4500
12-Man Ballistic Re-entry Vehicle	Saturn 1B	12	8000

A basic observation which can be made regarding resupply operations is that for a given payload requirement during a mission, it appears more economical to use fewer launches of a larger booster. For example, the Saturn 1B can deliver two-thirds more payload to 250 nm than the Saturn 1 for only about 10 percent increase in booster cost.

A primary requirement for a resupply vehicle is to make up cabin gas leakage. Leakage must therefore be controlled by design and by accurate and reliable leak detection and repair procedures.

To minimize resupply payload requirements, it is advisable to orbit the large MOSS space stations at altitudes of at least 250 nm. In this way, the sizable penalties of roughly 2000 - 7000 lbs/year of stationkeeping propellant (depending on atmospheric density) will not be exceeded.

B. EXPERIMENTAL FACILITIES REQUIREMENTS

1. Objectives

The focus of the present study is on the definition of space station facilities for experimentation to acquire the necessary biomedical and human factors information.

The space station facilities may be subdivided into the following:

Gravity Simulation Devices
Variable Cabin Atmosphere
Specimen Re-entry Capsule
Biomedical and Human Factors Laboratory (see Subsection VI F)
X-Ray and Animal Facilities (see Subsection VI G)
Data Management System (see Subsection VI C, D, E)

It is intended to discuss these requirements independent of specific station configurations. However, it will be appreciated that there are numerous interactions depending on the nature of the station and its layout.

Equipment and instrumentation are generally based on technology of the next several years. In several cases, the effects of microminiaturization are taken into account but in other cases, notably for the computer console of the psychomotor performance testing unit, the study program could not include a thorough investigation.

In the case of the Biomedical and Human Factors Laboratory, a mock-up is recommended at an early date to optimize operations within the laboratory.

The internal centrifuge scheme is also worthy of ground mock-up and experimentation at an early date to determine the problems of operating within a space station.

A discussion of the considerations involved in each experimental facility follows.

2. Gravity Simulation Devices

a. Rotating Space Stations

In the case of rotating space stations, an artificial gravity environment which approximates earth gravity can be imposed, as long as rotational

rates are within reason (below about 8-10 rpm) to minimize Coriolis effects on the crew, vestibular difficulties, and possible nausea.

Typical dimensions of a large rotating station indicate a maximum rotational radius of 75 ft, which, at a 4-rpm speed yields a 0.4 g level and at 6 rpm yields a 0.9 g level. At the present time, the 4rpm established in rotating room tests at The U.S.N. School of Aviation Medicine, Pensacola, Fla., is in doubt with respect to applicability , in view of the crew tolerance in a rotating space station. Simulation of ballistic re-entry levels of deceleration load factor in a large rotating station appears to be unreasonable (15.3 rpm for 6 g) from the standpoint of vestibular difficulties. However, with a restrained subject having an immobilized head and the long body axis perpendicular to the axis of rotation, no difficulties may arise at such rpm.

Use of a zero g hub gives a rotating station the benefit of experimentation under both weightless and artificial gravity conditions.

b. External Centrifuge

Intermediate in concept between a rotating station and an internal centrifuge, the external centrifuge permits simulation of re-entry g levels with an immobilized subject. The typical external centrifuge arm dimension has a radius of approximately 50 feet. If the arm opening is not sufficiently large for the subject to travel from cabin to the centrifuge module, an articulation system is needed to retract the module to the space station cabin. Emergency access to the subject may be difficult in either case.

c. Dumbbell Concept Station

Use can be made of the empty upper stage of the booster linked to the space station to serve as the counterweight in a dumbbell configuration. In this case, the configuration must be rotated to simulate gravity, and be held fixed for zero gravity experimentation. Thus, simultaneous testing at both gravity and weightless conditions is difficult and dual experiments may have to be programmed. There are many balancing and stabilization problems to be solved with such a configuration.

d. Internal Centrifuge

Where the space station design precludes artificial gravity simulation by station rotation, or external centrifuge, it appears feasible to perform gravity simulation by use of an internal centrifuge. The advantages of such a facility probably justifies its application to simulate higher g levels within the zero hub of a large rotating space station. Principal functions of a manned internal centrifuge are:

1) To provide preventive or therapeutic treatment to offset effects of long periods of weightlessness.
2) To conveniently supply different levels of artificial gravity for systematic investigation of the effect of such applications.
3) To determine crew physical fitness for re-entry by subjecting crew to re-entry level acceleration loading.
4) To permit a measurement of mass of the subject.
5) To permit performance of tests under simulated earth gravity.

The approach taken in the study was to determine the simplest and lightest concept of centrifuge, keeping in mind the limitations of the small space stations (MORL and Extended Apollo). In the case of the large space stations, design refinements might be introduced commensurate with the greater weight, volume, and power capability of such stations.

It should be pointed out that the volume penalty of installing a centrifuge can be minimized by shared use of that volume. For example, when the centrifuge is inoperative, the compartment space can be allocated to sleeping quarters or a radiation "storm cellar" or both. Such a plan would incur a penalty in terms of duty cycle flexibility.

Chief engineering problem areas involved in a centrifuge application are:

1) A need for dynamic and static balancing of the machine.
2) The attitude control fuel penalty or space station attitude disturbances associated with centrifuge spin-up and spin-down.

3) The possibility of a resonant condition arising from the precession frequency of the station following a disturbance, coinciding with the frequency of the equivalent mass-spring system representing the centrifuge.

These problems will be discussed later.

The basic simplified centrifuge scheme was studied parametrically, with capsule diameter as a variable for the following range of diameters.

Diameter (in.)	Capsule Type	Booster Type	*Weight Allowance (Pounds)	Volume Allowable (Cu Ft)
154	MORL, Apollo	Saturn 1, 1B	146	300
220	MORL, Apollo	Saturn 1	156	630
260	(All Types)	Saturn 1B, 5	163	800
396	MOSS	Saturn 5	192	2000

* Assumes no counterbalance

A representative layout of a centrifuge concept following the recommended approach is shown in Figure 30 .

The various characteristics of such a facility are:

1) Double occupancy by two crew members to counterbalance each other. Fine balancing to compensate for differential mass of the crewmen may be accomplished by moving counterbalance masses on arms.

2) Use of a minimum weight magnesium tubing truss to provide the necessary strength and rigidity.

3) Use of an adjustable couch permitting a selection of alternate positions for exposure to artificial gravity.

4) Use of a single rotating frame, accommodating attitude and gyroscopic effects by the station attitude control system.

5) Installation of the centrifuge within a 30-inch deep slice out of a cylindrical capsule.

6) Use of nearfield telemetry as much as possible to eliminate noise accompanying slip-ring data pick-off.

7) Immobilization of head and body to permit centrifuge rpm up to levels required to simulate re-entry loadings.

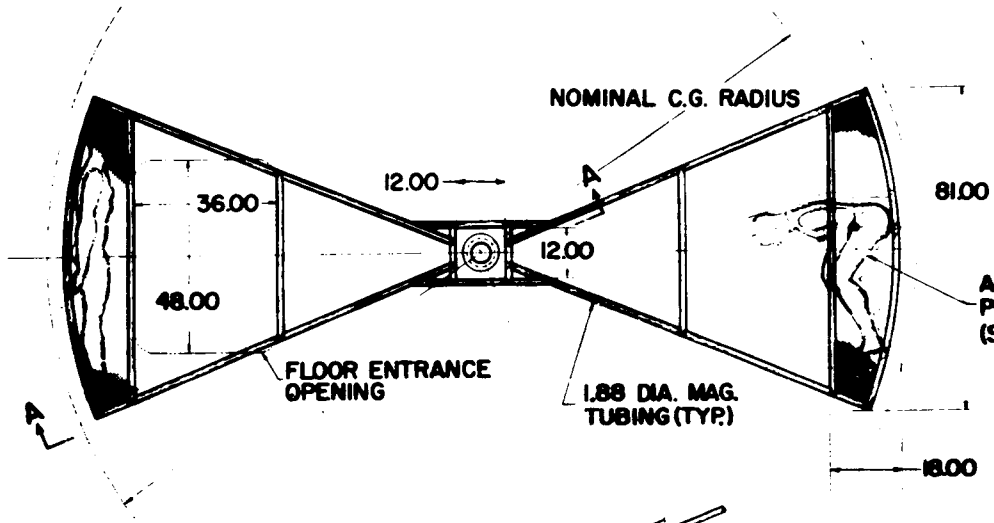

SPACE STATION	BODY DIA.	NOMINAL C.G. RADIUS	R.P.M. FOR-1G	R.P.M. FOR-7G
APOLLO	154 INCH	62 INCH	23.7	62.8
(S-IV STAGE)	220 INCH	95 INCH	19.3	51.1
(S-IV B STAGE)	260 INCH	115 INCH	17.5	46.4
(S-II STAGE)	396 INCH	180 INCH	14.0	37.1

NOTES:

1. FOR PROPER BALANCE SUBJECTS SHOULD BE IN IDENTICAL AND OPPOSITE POSITIONS WEIGHT OF EACH TO BE EQUAL.
   FOR SINGLE SUBJECT, USE EQUAL BALLAST.

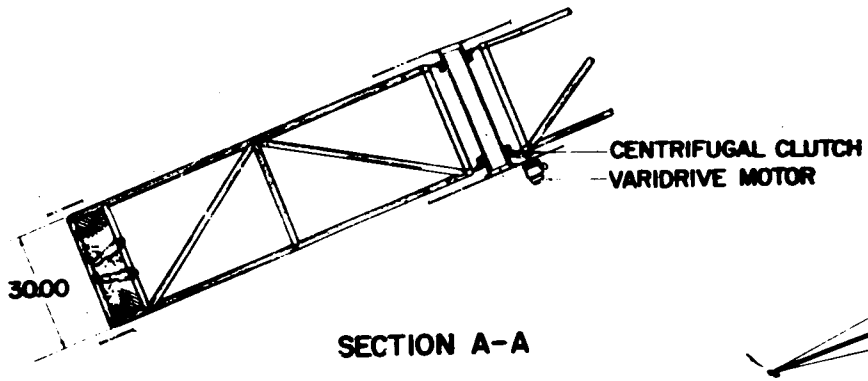

SECTION A-A

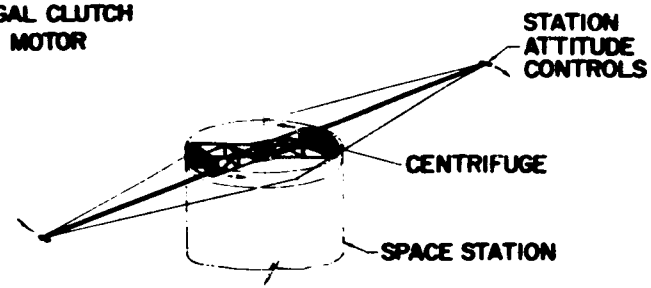

CENTRIFUGE SCHEMATIC

Figure 30 . Internal Centrifuge - Schematic Diagram

An exception to the above occurs when crew size is such that only one man can be centrifuged at a time. In this case a collection of loaded storage vessels of the mass can be substituted for a man. For the larger space stations, it is feasible to provide the subject with a psychomotor test or control panel so that he can be tested under simulated re-entry loading.

Calculations were made for the four centrifuge configurations presented in Table 44 , to determine rpm required for various acceleration levels, spin-up power required for spin-up times of 1 minute and 10 minutes, as well as fuel (liquid bipropellant) requirements per spin-up and spin-down cycle to cancel attitude disturbances. These are jointly illustrated in Figure 31 .

These calculations indicate that for maximum rpm limitations in the region of 30 rpm, (based on ground experimentation experience which may not be directly applicable) the smaller centrifuges are limited to 3 g levels or less, whereas the largest can perform at 4.5 g. If it is possible for the subject to tolerate higher rpm in the space station, then the smaller centrifuge can simulate 3 g to 5 g, while the large centrifuge can surpass 7 g. These conclusions must be tempered by a dynamic analysis of the specific centrifuge - space station configuration.

The spin-up power study indicates minimal power requirements for a 10-minute spin-up time. On the other hand, for a 1-minute spin-up, power and motor size become excessive with the higher g levels.

The attitude control fuel requirements to counteract one spin-up and spin-down cycle appears reasonably small at 1 g levels, but becomes a severe penalty with repeated exposure cycles at high g. Friction is assumed to be negligible in these calculations.

If the station is allowed to counter-rotate (in the ratio of moments of inertia of the centrifuge to station, times the angular velocity of the centrifuge) only small rotational rates are encountered. For example, with a 220-inch diameter capsule a 1 g level of centrifuge operation provides 0.5 rpm of the station. Correspondingly, at a 7 g level, there is a 1.3 rpm station angular rate. The counter motion of the space station arises at spin-up and is cancelled at spin-down.

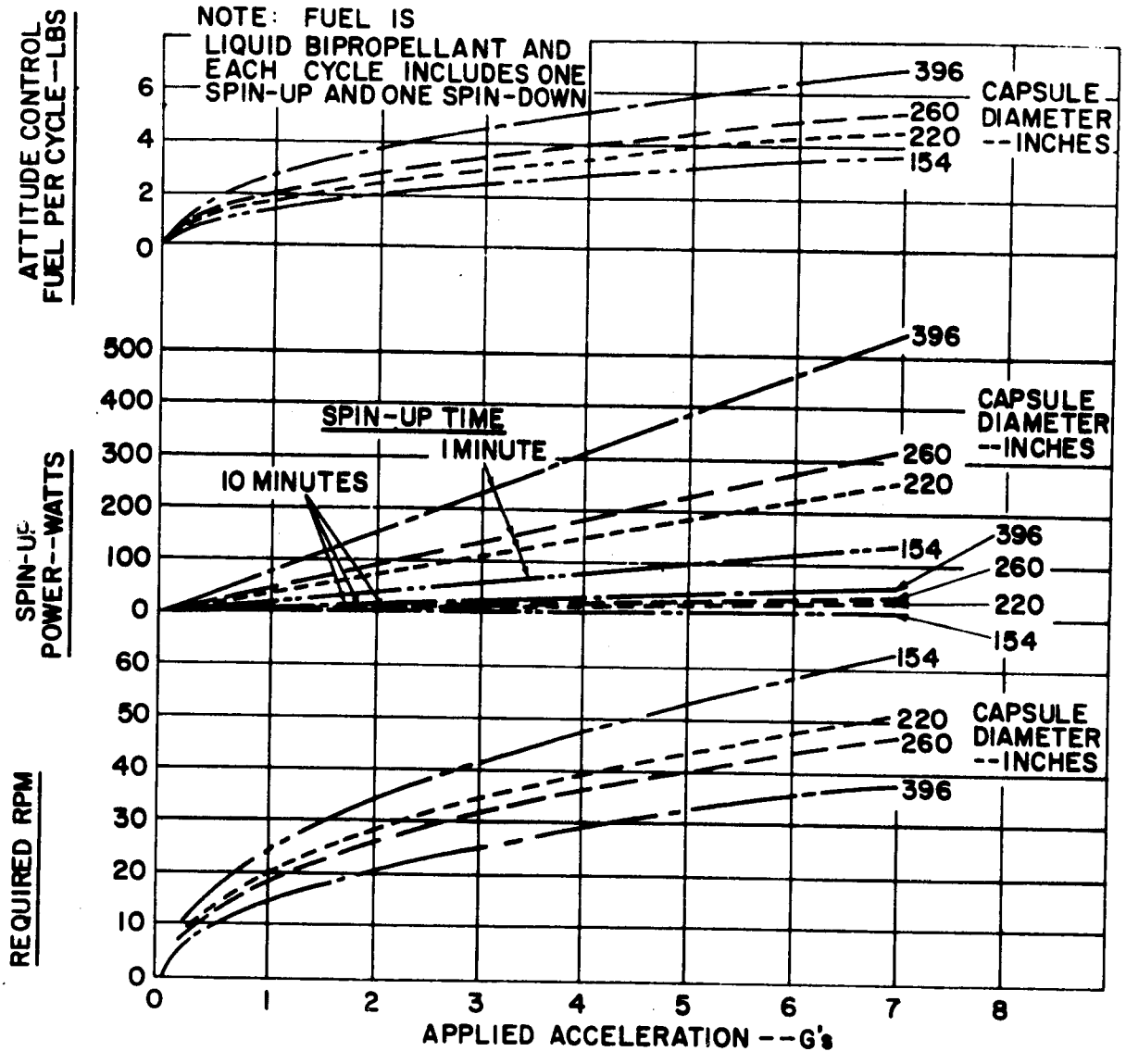

Figure 31. Internal Centrifuge Parameters

Use of a counter-rotating assembly to neutralize the angular momentum of the centrifuge is not indicated for several reasons:

1) The weight and volume penalty.
2) The complication of the rotating machinery.
3) Possible hazards for the subject(s).

If the centrifuge is not found to be essential for the well-being of the astronauts, then the extra (counter-rotating) machinery is wasted, whereas extra attitude control fuel can always be put to good use.

There is a question of rotational speed regulation requirements of the centrifuge, that is, regularity of the g level applied. This is particularly important if mass checks are to be performed by strain gauging of the centrifuge. It is felt that a 10 percent variation in applied g level will be satisfactory and that simple overspeed control will suffice.

e. Dynamics of Gravity Simulation Devices

In order to determine practical limits to the level of gravity simulation feasible for various space station designs, out-of-plane natural frequencies were calculated for the three rotating devices listed below:

1) A 10-foot radius rotating arm, to simulate an internal centrifuge, carrying a 300-pound tip load.
2) A 50-foot radius arm, to simulate an external centrifuge, carrying an 800-pound tip load.
3) A 150-foot radius arm, typical of a rotating space station (large Y), carrying a 35,000-pound tip load.

With each system rotating at a particular speed, an external disturbance (e.g., by the attitude controls) can incline the axis of rotation causing the system to precess.

When precession frequency is equal to or near the natural frequency of the equivalent mass-spring system of the rotating arm, large amplifications of arm motion can occur. The stiffness of the arm and, therefore, its natural frequency,

depends on the speed of rotation (i.e., g level) as well as the material and geometric properties of the arm. Figure 32 shows the resonant condition for each of the rotating arm devices for a range of space station configurations. The ratio $\frac{C}{A}$ is that of principal mass moment of inertia about the spin axis of the rigid body to its transverse mass moment of inertia. For simplicity, the rigid body precessional motion was assumed to excite the flexible body and the effect of the flexible motions on the rigid body was neglected. A more formal set of equations describing this interaction has been derived in Reference 142.

For an internal centrifuge in a MORL type space station, resonance occurs at g levels beyond those of interest. In a large rotating station having an internal centrifuge in the hub, however, resonance will occur at about 3 to 4 g. The centrifuge should be designed for a higher resonance point by increasing arm stiffness in this case.

In the case of an external centrifuge, resonance occurs near the 1/4 g level for space station configurations of interest. In the large rotating Y, resonance is indicated between 1/2 and 1 g.

Assuming the damping to be zero it is possible to obtain an approximation of the shape of the deflection amplification curve for space station configurations of interest (Figure 33).

In the cases of the External Centrifuge and Rotating Y station, where resonant conditions occur within the range of desired g levels, if it is assumed that spin-up can occur with excitation held to zero until required rotational speed has been reached, the resonant condition can be bypassed with no structural response. Furthermore, the resonant condition can be shifted if desired to a higher g level by increasing arm stiffness.

The conclusions derived from this investigation are subject to modification by variation of stiffness parameters of the various gravity simulation devices, such as length and diameter of the rotating arms. However, the results are of value for an overall view of the general resonance problem where such devices are used in typical space stations.

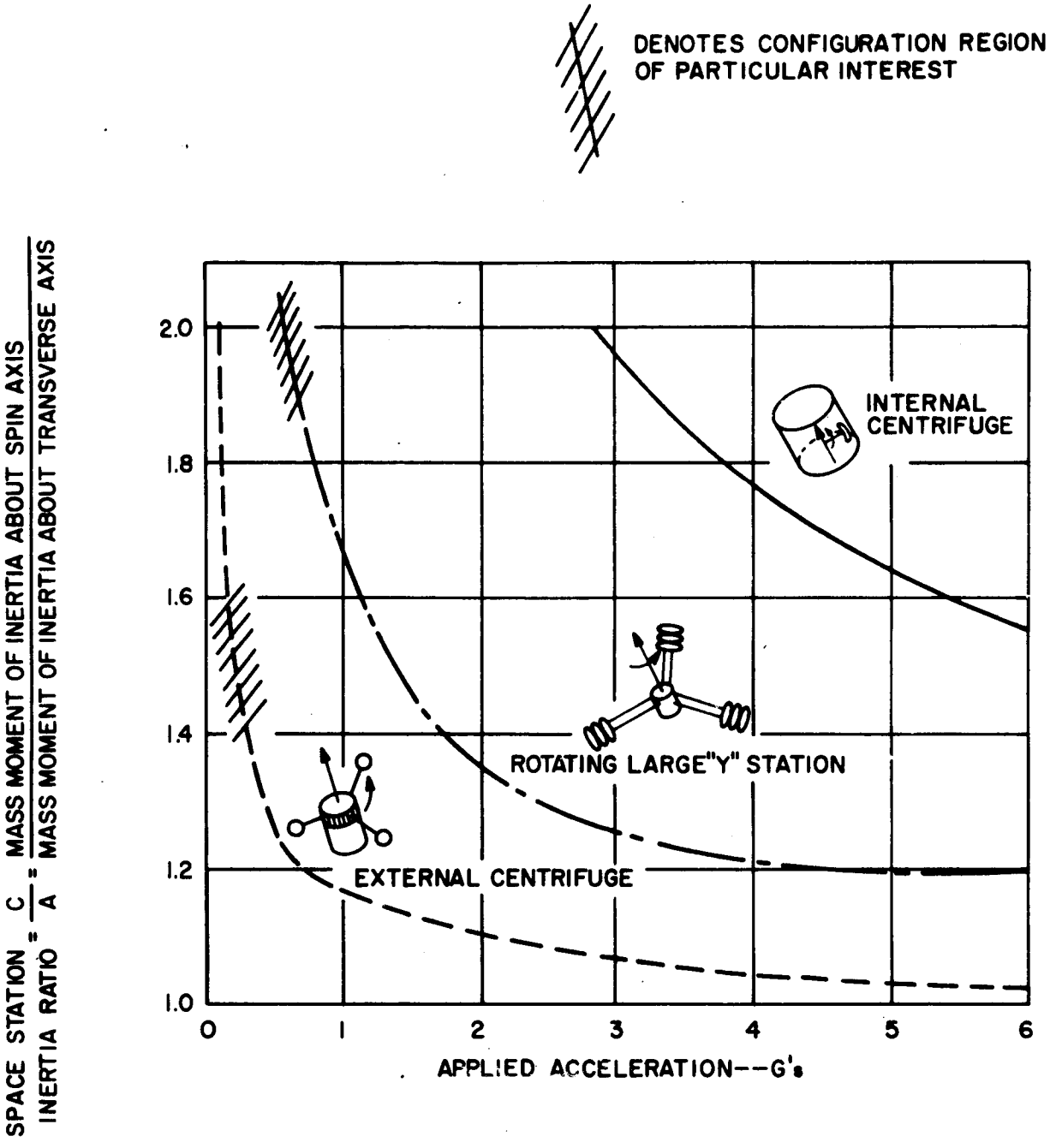

Figure 32 . Resonant Condition Acceleration - Various Gravity Simulation Devices

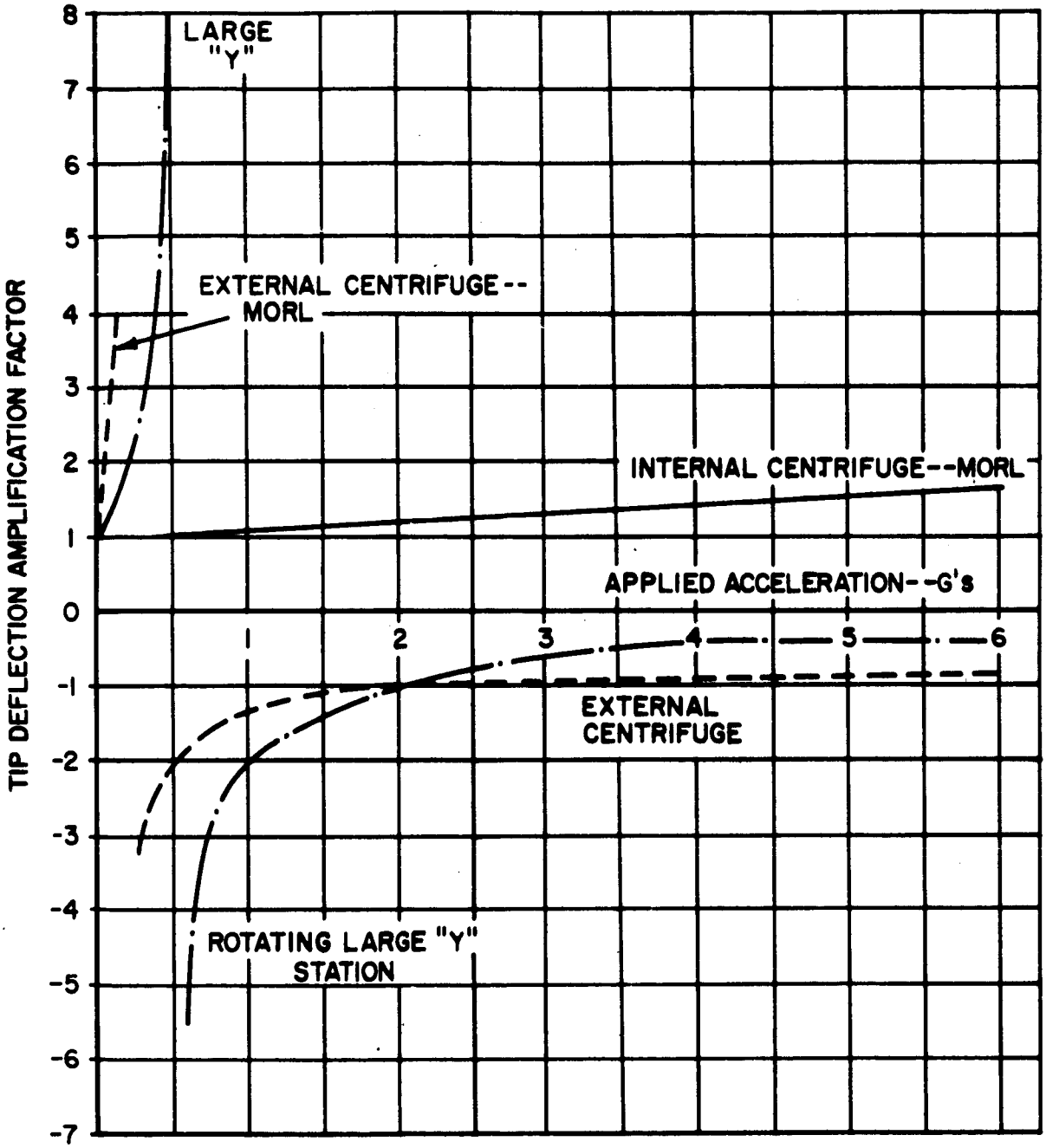

Figure 33. Amplification Factor for Various Gravity Simulation Devices

3. Variable Cabin Atmosphere

The choice of cabin atmosphere for interplanetary flight has a pronounced bearing on crew performance and safety as well as on the design of the spacecraft itself. In order to properly evaluate the effects of cabin atmosphere in the weightless condition and while performing on-board functions typical of space travel, special facilities are required.

There are several possible approaches to experimentation with variable cabin atmosphere which are listed below.

Space Station	Approach	Comment
Apollo Module	Whole capsule atmosphere variation, Face Mask or Pressure Suit, or successive flights.	Long exposure times with mask, suit, likely to be uncomfortable. Crew size is too small for sampling.
MORL Type	Subdivision of station (Plus airlock addition)	Volume penalty is important. Crew size is small for sampling.
Large MOSS Type	One or more Separate Modules (plus airlock (s))	Highly feasible

The variables in cabin atmosphere of interest are the cabin pressure and gas composition. The range of cabin pressure of interest varies from 3.5 psi to 15 psi and the diluent gas is probably Nitrogen.

a. Extended Apollo - Minimum Modification

The present Apollo lunar spacecraft atmosphere is 5 psi pure oxygen. To convert this system to a 7-1/2 psi, 50-50, O_2, N_2 system would entail a weight increase of about 50 pounds of shut-off and control valves, partial pressure controls and tankage, plus approximately 50% higher allowance for leakage, repressurization and airlock utilization. In the case of a two-man 100-day Apollo space station, without extra-vehicular activity, this gas allowance amounts to approximately 120 pounds. Thus, a two-man, 100-day Extended Apollo would weigh 170 pounds more at launch with a mixed gas system than with a single gas system. This weight difference represents a volume of approximately 3 ft^3.

To modify the two-gas system to incorporate a variable pressure and composition capability (in orbit) would entail sophistication of equipment requiring additional weight and volume compared with a fixed atmosphere two-gas system. The additional launch weight and volume associated with a variable atmosphere pressure and composition system compared to the pure oxygen system is estimated by the equations below:

$$W_{TOT} = \Delta W_{Hardware} + W_{Atmos.}$$

where $\Delta W_{Hardware} \approx 100\#$

$$\Delta W_{Atmos.} = \Sigma\left(\frac{P-5}{5}\right) \; 2.4t + 8\left(\frac{P-5}{5}\right)$$

P = cabin pressure-psi

t = time at each pressure - days

ΔW = difference in weight between variable atmos. system and 5 psi O_2 system; lbs

$$\Delta V_{TOT} = \Delta V_{Hardware} + V_{Atmos.}$$

$$\Delta V_{Hardware} = 2.2 \text{ ft}^3$$

$$\Delta V_{Atmos.} = \frac{\Delta W_{Atmos.} + 8\left(\frac{P-5}{5}\right)}{40}$$

ΔV = difference in volume between variable atmos. system and 5 psi O_2 system; ft^3

It is assumed that after experiments are completed at the higher pressure level, the cabin atmosphere is reduced to the normal operating pressure.

b. Other NASA Space Station Concepts

Unlike the Extended Apollo concept, all other space station concepts are not volume restricted to the degree that multiple pressure vessels cannot be employed. The MORL, Small "Y", Large MOSS "Y", Toroidal, and Apollo with additional laboratory chamber, can all provide a separate pressure vessel

area of sufficient volume for variable atmospheric pressure and composition experiments. Consequently, the degree of sophistication required of the primary cabin system is less than that required of the Extended Apollo system. While a mixed gas system is specified for all space station concepts, only the Extended Apollo requires that the basic mission ECS be capable of in-flight variation of pressure and atmospheric composition. All other concepts can have a simpler basic mission ECS with respect to atmospheric pressure and composition. The lower reliability, more complex "variable" system can be confined to the experimental area thus minimizing the effects on the basic vehicle. In all the various configurations (except Extended Apollo) it is recommended that multiple pressure vessels be employed. This results in the best controlled experiment, no reduction in mission system reliability, and offers back-up pressure vessels for emergency situations.

The possible pressure vessels can be classified into three primary groups:

1) Mission pressure vessel with mission system, airlock, pumping system, plus experimental pressure vessel with experimental ECS system.
2) Same as 1) but without airlock.
3) Single pressure vessel with sophisticated single system.
    a) Apollo command module with additional laboratory chamber.
    b) Minimum modification Apollo command and service modules.

All space station concepts fall into one of the above classifications with respect to the variable atmosphere experiment. The (3a) classification would have approximately the same fixed ECS weight as (3b) (for the same crew size) but would have a different variable weight (atmosphere) and an additional fixed weight of pressure vessel and auxiliary equipment which is assignable to the variable atmosphere experiment. The "variable" weight would differ from that of case (3b) by the extent of the difference in leakage rates between (3a) and (3b). The total weight penalty to provide a variable mixed gas experiment with the extended Apollo configuration (3a) instead of a fixed 7-1/2 psi 50/50 system is estimated by the following:

$$W_{TOT} = W_{ECS} + \Delta W_{Variable} + \Delta W_{\substack{Structure\ \&\\ Auxiliary\ Equipt.}}$$

where $\Delta W_{\substack{ECS\\ Fixed}} \approx 50\#$

$$W_{Variable} \approx \Sigma \left(\frac{P-7.5}{7.5}\right) 2.4t \times \frac{\ell}{\ell\ Apollo} + W_1 \left(\frac{P-7.5}{7.5}\right)$$

where P = cabin pressure, psi

t = time at each pressure - days

ℓ Apollo = leakage rate of Apollo capsule

ℓ = leakage rate of specific design (for preliminary purposes, lacking detailed design data ℓ/ℓ_{Apollo} can be considered as being between the value of 1.5 and 2.)

W = the initial weight of the atmosphere in the space station

$\Delta W_{Structure}$ = Function of a particular design.

The classifications 1 and 2 include the various "Y" and Toroidal configurations which by engineering necessity must be multiple pressure vessel designs. As such, a particular pressure vessel can be utilized as an area for variable atmosphere experiments. It is difficult at this level of definition to determine what amount of the structural weight should be chargeable to the variable atmosphere experiment. The penalty may be negligible if, for example; a "storm cellar"-type radiation shelter can be used for experiment.

It is assumed that the volume provided for a variable atmosphere experiment will be a natural, self-contained subdivision of each particular station, i.e., one spoke of a "Y" configuration, or one side of a poly-hedron (toroidal) configuration.

Based on the above, it is estimated that the additional penalty associated with providing a variable pressure and atmosphere experiment on classification 1 and 2 space stations can be best given by the expression:

$$\Delta W_{TOT} = \Delta W_{\substack{ECS\\ Fixed}} + \Delta W_{Variable}$$

where $\Delta W_{\substack{ECS \\ Fixed}} \approx 50\,(1 + \frac{N-2}{2})$

where N = max. number of men employed in variable atmos. area $N \geq 2$

$$\Delta W_{Variable} = \Sigma\,(\frac{P-7.5}{7.5})\,2.4t\,(\frac{\ell}{\ell_{Apollo}}) + W_1(\frac{P-7.5}{7.5})$$

where $\frac{\ell}{\ell_{Apollo}} = f\,(N)$

W_i = the initial weight of the atmosphere in the space station.

The relationship between crew size (N) and leakage (ℓ) in the above expression requires structural design definition of the particular space station being considered for the variable atmosphere experiment.

4. Specimen Re-entry Capsule

The General Electric re-entry capsule design used in the Discoverer series is taken as a representative capsule for returning specimens, materials, magnetic tape, and written or photographic data to earth when manned re-entries are not planned for some time. The geometry of the capsule is defined as a rounded-nose conical frustum having overall dimensions of 33 inches in diameter and 27 inches in length. Usual capsule weight, including heat shield, retrorocket, and recovery aids, was 300 lbs. The maximum payload of the capsule is in the neighborhood of 55 lbs, which is more than adequate for insulated containers of blood and urine specimens, 35-mm film, Polaroid photos, strip charts, and magnetic tape. A usable volume of approximately 2.5 cubic feet is estimated.

The heat shield ablative material pyrolizes at 3000°F, while inner capsule temperatures do not exceed 100°F.

Normally, the Lockheed Agena attitude control positions the Discoverer for ejection of the re-entry capsule. The capsule is spin-stabilized on ejection and the retrorocket is fired. It is despun before reentry and the retrorocket is jettisoned. After re-entry, a parachute is released and the ablative heat shield is jettisoned. A stroboscopic light is attached to the recovery capsule to flash its location.

Adaptation of the Discoverer re-entry capsule to the space station may require a form of hangar to protect the re-entry body from the space environment and for loading access from the space station. Guidance and navigation equipment can be kept to a minimum, since trajectory monitoring and control can be handled to some extent by space station attitude system and control personnel. A usage of one capsule per month is anticipated, each with a design payload of 10 lbs. Since this is substantially less than the capacity of the Discoverer re-entry capsule, it may be desirable to develop a specialized re-entry capsule more suited to this function. Such a capsule would weigh roughly 200 lbs. Dimensions would be approximately 20 inches diameter and 20 inches long.

C. COMMUNICATIONS AND DATA HANDLING

1. Objectives

The communications and data handling study is concerned with the general design requirements of the space station electronic system.

The communication subsystems include:

The Command Link
The Telemetry Link
Tracking Aids (Beacon, Range and Range Rate)
Communication Relay Link
Data Handling (Commutators, Coders, Signal Conditioners Programmers, Storage Devices, Analog-Digital Converters)

The system takes into consideration the existing NASA ground data handling systems which make use of the FPQ-6 and FPS-16 radars and the standard 225 - 260 mc telemetry (and 1700 mc contemplated by 1970). Use of a modular system design will permit adaptation to planned alterations in ground station frequency.

The data handling subsystem is discussed in detail in terms of its various assemblies in the final portion of this section.

On the basis of compatibility with existing and projected ground facilities, the final design will utilize the following frequency ranges:

1) VHF (260 mc) which will provide the telemetry and voice communications data link
2) C Band (5400 mc) which will provide the tracking
3) VHF (400 mc) will provide the command link
4) HF (< 30 mc) which will provide a secondary means of voice communication
5) VLF in which space vehicles could communicate with each other
6) UHF (1700 - 2300 mc) for use in video transmission to the ground

A block diagram of the space station data and communication system is shown in Figure 34.

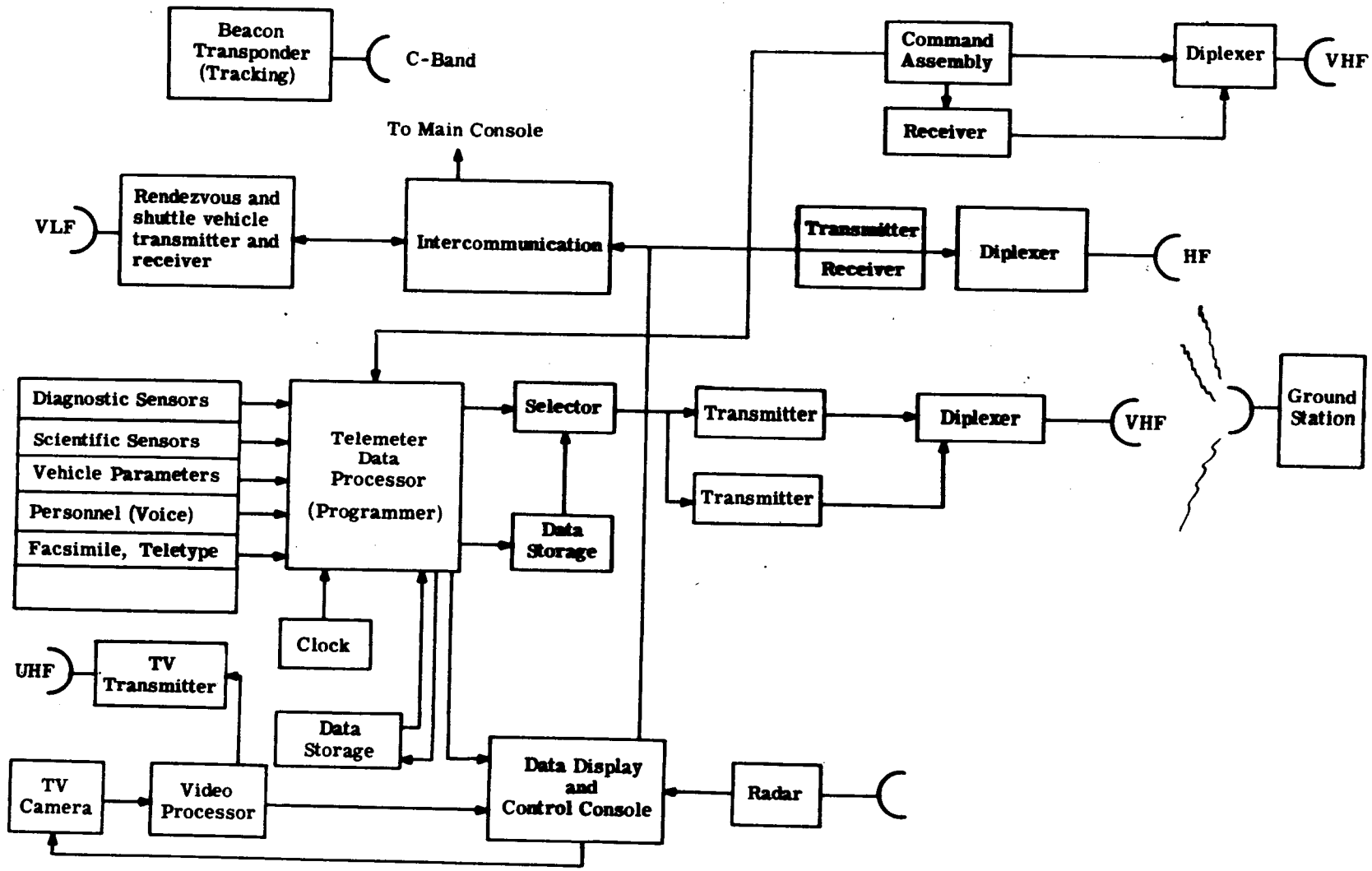

Figure 34. Space Station Communications and Data System

The major subsystems consist of the command, tracking, telemetry and station to ground and station to rendezvous vehicle communication links.

Also included on the diagram are the data handling equipment for processing, storing and transferring the information to the ground station.

2. Weight and Volume Estimate

The weight of the anticipated on-board Communications and Data Handling Equipment, including spares, is estimated as follows:

For the MORL-type Space Stations:

	Pounds
Tracking System	20
Data Handling Subsystem *	220
Signal Conditioners	40
Voice Communications	50
Rendezvous System	145
Monitoring & Control System	65
Television System **	65
Antenna System	30
Shielded Cabling and Wiring	25
Total Weight:	660 lbs

Assuming overall density of 25 lbs/ft^3, total volume = 26.4 cu ft

For the Large MOSS-type Space Station:

Total Weight = 660 + 20% = 792 lbs

Corresponding Total Volume = 31.7 cu ft

---

* Refer to "Data Handling Subsystem" subsection D for detailed breakdown of the subsystem, weights and spares.

** Television system considerations are discussed under "Biomedical and Human Factors Monitoring System," subsection E.

D. DATA HANDLING SUBSYSTEM

1. Summary

The communications and data handling system proposed herein have been tailored to conservatively satisfy a representative list of data channel monitoring requirements pertaining to vehicle environmental and operational parameters, biomedical and human factors, and scientific requirements.

The system is wholly within the state-of-the-art and does not require the major development of new components. This system can probably utilize some equipment developed on other programs. The telemetry system is based on existing proven techniques.

The data handling system block diagram (Figure 35) shows that the inputs consist of either spacecraft data or experimental data. The spacecraft data or narrowband information is multiplexed according to a fixed program format at a rate of 1920 words per frame with a readout once every 16 seconds. The experimental or wideband data is fed into a multiplexer controlled by a flexible format program.

The high degree of data management flexibility is a primary advantage provided in the system. This eases the problem of interface constraints existing between the experimenter and the data handling system design engineers. With the available flexibility, the experimenter has a considerable degree of freedom in selecting or changing input signals. The sampling rate can be varied and the channels that are monitored can be changed in the multiplexer at any time, while in orbit, as long as the wideband capacity of 1920 words/sec is not exceeded.

The system is a pulse code modulation telemetry system. One analog-to-digital converter handles both the narrowband and wideband data and converts each sample (or word) into six bits. The data can then be transmitted in real time or it can be commanded into a recorder and readout for transmission during a pass over a ground station. The narrowband and wideband recorders are identical and have three modes of operation. Mode 1 is for narrowband data and has a record-to-readout speed ratio of 1/64. Mode 2, for

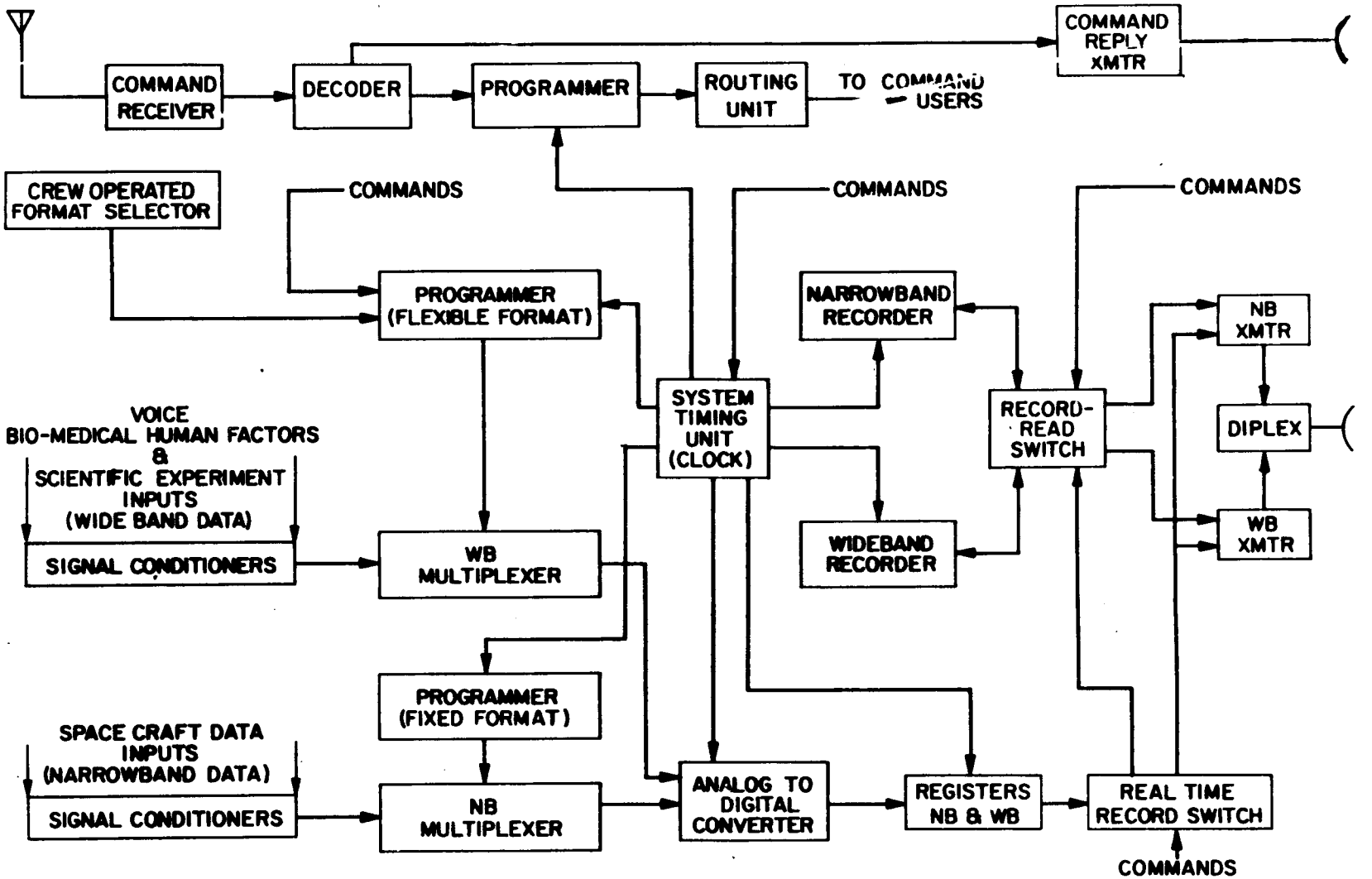

Figure 35. Data Handling System Block Diagram

wideband data, has a 1/24 record-to-readout speed ratio. Mode 3 is for wideband plus voice data and has a record-to-readout ratio of 1/8. The recorders are interchangeable.

Ancillary equipment consists of the system timing unit and the command receiver assembly. The clock unit (see Figure 34) counts down from a 276,480 cps crystal oscillator to derive clock pulses at a number of lower frequencies. The command receiver is a PCM/FM link with the ground and controls the different operating modes and flexible format program. It will have a capacity of at least 350 commands which can be decoded, verified correct, and acted upon. Capability exists to store as many as 100 commands to be acted upon at future times.

Spares and logistics requirements are reduced and reliability is increased by the feature of interchangeability of function. Transmitter subassemblies and gate modules in the multiplexer units, as well as recorders, are examples of interchangeable items which reduce the requirement for spares and for storage space.

2. System Description

a. Narrowband Capacity

The data monitoring category pertaining to vehicle environment and operational parameters contributes greatly to the complexity of the data handling system. These are considered to be narrowband, low bit rate data from 400-450 channels. Fixed (non-flexible) data formats are proposed to handle this narrowband data with a capacity to accommodate a reasonable quantity of spare channels as a growth-contingency. A fixed format consisting of a 1920 words/frame with a readout once every 16 seconds, and a total narrowband sample rate of 120 words per second will adequately monitor, using 432 channels, the following spacecraft categories: (see Table 45)

1) Guidance and control (including rendezvous) 66 words/sec
2) Power 20 words/sec
3) Communication and data handling 19 words/sec
4) Structures 15 words/sec

TABLE 46. MODE 1. NARROWBAND RECORDER: DATA LINK A
6 BITS/WORD

				1920 Word/Frame One Frame in 16 Sec.		
Measure	(Estimated) No. of Channels	Sample Rate Words/Sec	Total Bits/Sec	(Estimated) No. of Channels	Sample Rate Words/Sec	Words
Guidance & Control	2	15	180	2	15	480
	6	3	108	10	3	480
	24	1/2	72	60	1/2	480
	32	1/8	24	120	1/8	240
	32	1/16	12	240	1/16	240
	96		396	432		1920
Power	4	3	72			
	8	1/2	24			
	16	1/8	12			
	32	1/16	12			
	60		120			
Command & Data Handling	16	1/2	48			
	24	1/8	18			
	128	1/16	48			
	168		114			
Structure	12	1/2	36			
	48	1/8	36			
	48	1/16	18			
	108		90			
TOTALS	432		720			

A tentative listing of weight, size, and power requirements of the data handling subsystem is listed in Table 47.

TABLE 47. WEIGHT, SIZE AND POWER OF DATA HANDLING SUBSYSTEM

Subsystem	Weight	Size	Power	
			Peak Watts	Duty Cycle
(2) Recorders	23 lbs (ea)	1300 in.^{3} (ea)	20 (ea)	80%
Narrowband	10 lbs	500 in.^{3}	13	100%
Wideband	9 lbs	500 in.^{3}	10	30%
System clock	3 lbs	50 in.^{3}	3	100%
Command system	11 lbs	400 in.^{3}	8	25%
Command routing unit	5 lbs	100 in.^{3}	1	10%
Narrowband transmitter	3.5 lbs	100 in.^{3}	10	10%
Wideband transmitter	3.5 lbs	100 in.^{3}	50	10%
Command reply transmitter	2.0 lbs	50 in.^{3}	10	5%
Signal conditioning	20 lbs	500 in.^{3}	15	100%
Shields, cabling & wiring	30 lbs	300 in.^{3}	-	-
Antenna diplexers	4 lbs	100 in.^{3}	-	-
Thermal control circuits	13 lbs	200 in.^{3}	30	10%

The totals for the data handling system exclusive of power handling circuitry and antennas is as follows:

Total weight including spares* (60 pounds)

Overall volume including estimated separation and spares (220 lbs; 6 cu ft)

Worst case average power (78 watts)

* For details of spares, refer to "Redundancy and Spare Parts Considerations" subsection.

b. Wideband Capacity

Bio-medical-human factors and scientific experiments will be handled through the wideband data link using a memory unit as a flexible data format. The core memory unit will have a 11,520 bit capacity. This will represent a 1920 words/sec format with a readout once per second. This memory unit, in conjunction with a decoding matrix and a multiplexer unit, will gate up to 64 data channels. Format flexibility can be accomplished by storing the desired data channel sequencing program in the core-memory unit. New programs may be injected by the crew or by ground command. Data sample rates from 1 to 1920 words per second could be accommodated in the format. See Table 48. It is desirable to have a number of format memory units aboard, weight and power budgets permitting, which would be switched by a multiplexer-selector and programmer unit. This scheme would save time where it is necessary to inject new programs into the single format memory.

The data sampling capacity selected for the wideband, bio-medical and experimental data, could be increased if the need should arise to sample various high-response channels at a higher rate. This would, in turn, require a sacrifice in the recorder loading time. A trade-off study would likely show that the better approach would be to operate on the information ahead of the data sampling system to reduce the sample requirements. The various wideband sample rates and resulting recorder loading time are listed below:

Wideband Sample Rate (Words/Sec)	Recorder Loading Time (Minutes of Continuous Operation)
960	192
1920 *	96
3840	48
5760 **	32

* Present selected sample rate

** Same as present sample rate chosen for voice. This would eliminate Mode 3 and simplify the recorder design.

TABLE 48. MODE 2. WIDEBAND RECORDER: DATA LINK B

6 BITS/WORD

	Sample			Sample		
Measure	No. of Channels	Rate Words/Sec	Total Bits/Sec	No. of Channels	Rate Words/Sec	Total Bits/Sec
ECG	1	640	3840	1	640	3840
EEG	1	640	3840	1	160	960
PVC	1	160	960	1	160	960
RR	1	30	180	2	40	480
Misc.	14	30	2520	17	40	4080
BP	1	1	6	1	160	960
Mass	2	1	12	1	1	6
Temp.	2	1	12	2	1	12
Timing	3	1	18	3	1	18
Sync.	10	1	72	24	1	144
	48		11520	63		11520

1920 Words/Frame One Frame per Second			Format Memory = 1920 x 6 = 11,520 Bits		
Sample			Sample		
No. of Channels	Rate Words/Sec	Words	No. of Channels	Rate Words/Sec	Words
3	480	1440	1	640	640
15	30	450	3	160	480
30	1	30	19	40	760
			40	1	40
48		1920	63		1920

This rate will load a 66.36×10^6 bit recorder in 96 minutes.

NOTE: Assuming bit data recorded at a rate of 6 min/hr the recorder would be fully loaded in 960 minutes (readout = 4 minutes).

c. Data Storage Capacity

Telemetry data storage will be handled using two high-capacity tape recorders. The two recorders will be identical. One will be connected to record the narrowband data on a continuous basis (except during readout) while the other will record the wideband data on a load-at-will basis. The wideband data recorder will also be employed to record digitized-voice data at a sample rate of 5760 words per second on a load-at-will basis, as shown in Table 49.

Wideband telemetry data would load the recorder in 96 minutes on a continuous basis. Continuous voice would load the recorder in 32 minutes.

Narrowband telemetry data would load the recorder in 12.8 hours.

Readout time for a fully loaded wideband recorder is 4 minutes. For a fully loaded narrowband recorder readout time is 12 minutes.

Using a six-minute per hour recorder load factor for wideband data, a 100% load factor for narrowband data, and a total elapsed time of 192 minutes, the narrowband data could be read out in 3 minutes while the wideband data could be read out in 48 seconds. If, in addition to the 6-minute per hour of telemetry wideband data, we also include an 8-minute per hour voice load factor, the wideband recorder would be fully loaded and could be read out in 4 minutes.

Recorder packing densities employed will be 256 bits/inch for narrowband data and 512 bits/inch for wideband data. On the basis of a 900 foot tape length, this establishes a recorder capacity of 33.18×10^6 bits for narrowband and 66.36×10^6 bits for wideband. The recorders can be interchanged between the two data sources to increase the mission reliability figure or, in the case of a partial or complete failure of one recorder, the remaining recorder will record the data from both data sources on a time-shared basis. For example, a loaded recorder could consist of 90 minutes of wideband data plus 90 minutes of narrowband data; however, readout time for the total data would be $90/64 + 90/24 = 1.406 + 3.75 = 5.156$ minutes.

TABLE 49. DATA MANGEMENT RECORDER CHARACTERISTICS

Characteristics	*Mode 1	*Mode 2	*Mode 3
Channels (2 six-bit data words)	12	12	12
Channels (timing-serial)	1	1	1
Channels (mode logic-serial)	1	1	1
Packing density (bits/inch)	256	512	512
Recording time (minutes)	768	96	32
Record speed (inches/sec)	15/64	15/8	5
Readout speed (inches/sec)	15	45	45
Readout time (minutes)	12	4	4
Record/readout ratio	1:64	1:24	1:8
Tape length (feet)	900	900	900
Input data rate (bits/sec)	720	11,520	34,560
Readout data rate (bits/sec)	46,080	276,480	276,480
Readout (RF link)	A	B	B
Total bits per recording ($x10^6$)	33.18	66.36	66.36
Input words/sec	120	1,920	5,760
Estimates of size, weight, and power (ea)			
Power: (watts)			
Record	12	15	15
Readout	17	20	20
Standby	7	7	7
Start: (peak watts for 4 sec)			
Record	17	25	25
Readout	30	40	40
Size: (cubic inch)			
Electronics	400	400	400
Recorder Assembly	900	900	900
Weight: (lbs)			
Electronics	5	5	5
Recorder Assembly with reels and tape	18	18	18

* Mode 1 Vehicle environment and operational parameters (NB)

* Mode 2 Biomedical-Human factors (WB)

* Mode 3 Voice (WB)

Where the ground station complex consists of six or seven stations capable of telemetry data readout (approximately 20 to 30 per day) four-minute to eight-minute readouts can be assumed.

The recorders would readout in reverse with the recorder electronic logic sending the word complement, and the ground reduction would reconstruct the word before entering the data on magnetic tape.

d. Time Accumulator Capacity

The time accumulator is a part of the system clock assembly. The accumulator will consist of an 18-stage flip-flop register with serial read-in and parallel readout to provide an accumulation of 1 ppm pulses for an elapsed time of 128 days after which it would recycle. This data can be sampled by the data system through the use of three adjacent channels representing three six bit words.

An identical system clock, including the time accumulator, will be aboard the spacecraft which will be designed for quick plug-in replacement and repair.

The time accumulator will update its registers at the rate of once per minute for a total of 128 days after which it will recycle. Its 18 stages will be coded as follows:

7 Stages	0 - 128 days
5 Stages	0 - 24 hours
6 Stages	0 - 60 minutes

Its output register will be sampled periodically by the telemetry system and it will have an output which is fed to the command assembly time register (4 minutes suggested).

e. Command Link Capacity

Determination of the command link requirements will be one of the last areas of the communication and data handling complex to be resolved. Operational concepts associated with ground station facilities and spacecraft daily operation and information volume indicate the need for a command

system having a capacity in excess of 350 command combinations. A tentative listing of the command requirements is as follows:

Address Category	Estimated Commands (Discrete)	(Non-Discrete)
Guidance and Control	50	20
Power	35	
Communication and Data Handling Subsystem	120	10
Structures	40	5
Experimenter	30	10
Spares	25	10
Totals:	300	55

f. Data Handling

(1) RF Transmission

The rf equipment connected with the telemetry data transmission and command reply are tentatively established to operate in the frequency range of 215 mc to 260 mc. The command reply transmitter could be a separate transmitter in the frequency range of 400 mc; however, this would be costly in weight and might better be handled by using the narrowband or wideband transmitter using the real-time operational mode.

The telemetry data and digitized voice will be divided into a wideband link and a narrowband link having the following characteristics as shown in Table 50.

TABLE 50. WIDEBAND AND NARROWBAND CHARACTERISTICS

Characteristics	Wideband	Narrowband
Frequency (mc)	215-260	215-260
IF Bandwidth required	500 kc	100 kc
Modulation	PCM/FM NRZ*	PCM/FM NRZ
Data Rate: (bits/sec)		
Recorder readout	276,480	46,080
Real-time voice only	34,560	34,560
Real-time voice and NB	69,120	-
Real-time NB and WB	23,040	23,040
Real-time command reply	~ 1 kc	~ 1 kc
Bits per word	6	6

* NRZ = Non-return to zero

Data from the two recorders will be unloaded at each station pass via two operating RF links in the 215 to 260 mc frequency band. TLM-18 type systems are assumed for the ground stations. The wideband data link will operate at a bit rate of 276,480 bits per second and the narrowband data link will operate at a bit rate of 46,080 bits per second.

The wideband portion of the system will be used to monitor biomedical and human factor data; scientific experimental data; and to digitize voice information associated with these data categories. This data will require that the spacecraft transmitter have a transmitter power capability at least 7 db greater than that used for narrowband transmission due to the 500 kc vs. 100 kc i-f bandwidth required.

It would be desirable to use the same transmitter design for the narrowband and wideband transmission links so that the backup spare replacements would be reduced. A crew or command operation could establish the desired power output of the transmitter for either narrowband or wideband operation, or possibly the transmitter plug-in slot would automatically establish this condition.

(2) Real-Time Telemetry

Real-time telemetry or real-time voice data can be transmitted to ground via the narrowband data link with the ground receiver i-f bandwidth being 100 kc. See Table 46. The wideband RF link will require a ground receiver i-f bandwidth of 500 kc. A single analog-to-digital converter (ADC) will digitalize both the narrowband and wideband telemetry data by interlacing at a ratio of 1 to 16, or the narrowband and voice at an interlace ratio of 1 to 48. Real-time digitized data will be in serial form with narrowband and wideband data interlaced from the ADC to the modulator which will require separation at the ground station. Separation of the narrowband and wideband data aboard the spacecraft prior to storage on the recorders will be done in registers connected to the output of the ADC unit. These registers can be clocked out to the recorder inputs in parallel form directly to the 12 channels of each recorder representing 2 six-bit words per transfer. Each recorder will use two additional channels to record timing and mode logic coupled with data identification.

(3) Data Handling Subsystems

(a) Narrowband Data Handling Subassembly

The spacecraft status data will be processed and telemetered via the narrowband data handling assembly. The assembly will consist of signal conditioners, digital multiplexer gates, analog multiplier switches, a narrowband multiplexer programmer, and a analog-to-digital converter (ADC) with its associated gates, registers, and command logic. The assembly will accept both digital and analog inputs, process and combine them into a time shared pulse train, and record the serial data on tape or transmit in real time to the ground station. The ADC unit will be common to the narrowband and wideband link and will operate on both data using an interlace

principle. The interlace mechanics will be such as to allow storage in the registers for parallel readout to the narrowband recorder and the wideband recorder or for direct combined serial readout through the r-f transmitter in real-time over one r-f link as shown in Table

Six bit word quantization has been chosen to satisfy the desired accuracy for all but a few cases. In those cases where a particular channel will require greater accuracy adjacent channels will be combined to satisfy 12-bit quantization.

Signal conditioners for converting non-standard inputs will be of the following general types: voltage dividers; d-c level converters; a-c to d-c converters; resistance-to-voltage converters; r-f power-to-voltage converters; d-c amplifiers; current-to-voltage converters.

The function of the multiplexer will be to serially sample 400-500 channels of status data. The present concept points to a need for a data format having a capacity for 1920 words per frame with an acceptable readout time of once per 16 seconds. This establishes the total narrowband data rate at 120-words per second. A fixed format is recommended in this area to satisfy the high reliability requirement. Table 47 illustrates one possible breakdown of format programming which might be employed to satisfy a requirement for 432 channels of data. See Figure 36.

(b) Wideband Data Handling Subassembly

Multiplexing of the wideband data pertaining to biomedical and experimental data and voice should be extremely flexible to accommodate spacecraft operational contingencies during any phase of the mission life. It has, therefore, become necessary to design the data format on a very flexible basis.

At this point it appears that the data handling requirements can be satisfied adequately with a data format having a capacity of 1920 words per frame with an acceptable readout time of once per second.

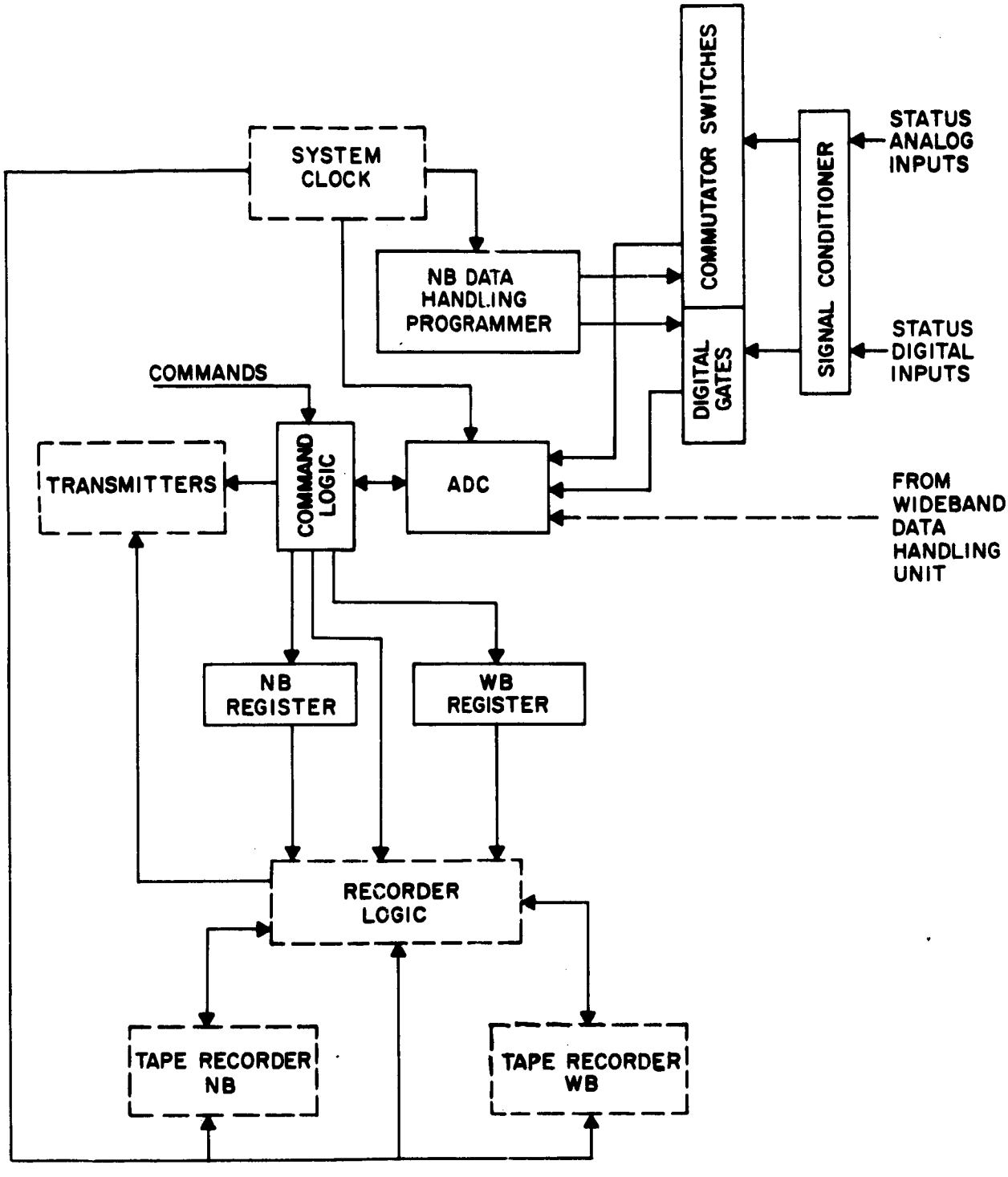

Figure 36. Narrowband Data Unit-Block Diagram

Format flexibility can be accomplished by storing the desired data channel sequencing program for any given operational mode in a core-memory unit. New programs may be injected by the crew or by ground command. By limiting the channel requirements to a maximum of 64 channels a memory capacity of 11,520 bits is required. Further study might indicate the need for additional format memories to reduce the loading time requirements. These could be considered as additional operational modes. Figure 37 shows the general concept for the wideband system. Table 48 illustrates two breakdowns of channels and sample rates that could be programmed into the format memory to monitor biomedical data.

(c) Data Storage Subassembly

The data storage subassembly will consist of two operational recorders. One recorder used for narrowband data will operate at one fixed rate (Mode 1) for a record-to-readout ratio of 1:64 as shown in Table 49. The second recorder will be used for wideband data recording using two modes. Mode 2 will operate at a record-to-readout ratio of 1:24 to record the telemetry data while the Mode 3 operation will be used when voice information is being recorded in digital form. The record-to-readout ratio in this mode is 1:8.

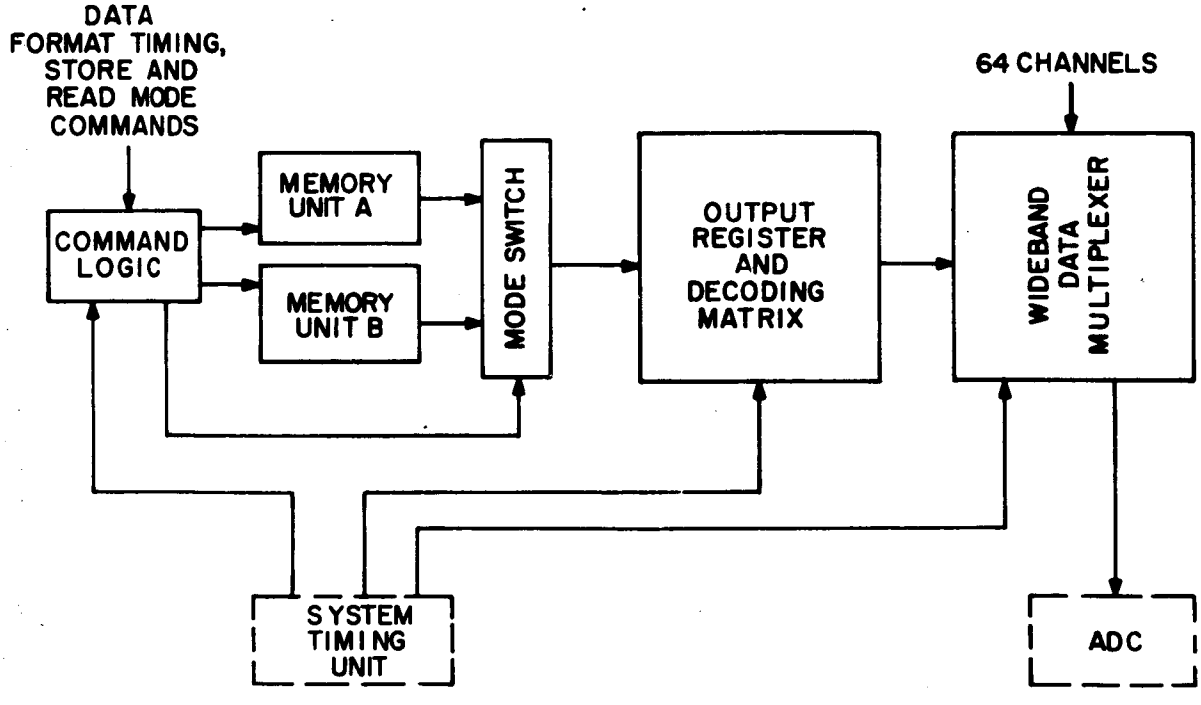

Figure 37. Wideband Data Handling Group-Block Diagram

Mode logic data will be placed on the fourteenth channel of the recorder to assist the readout logic at time of command readout. The thirteenth channel is used to regulate and control readout speed and data syncronization (sync). The remaining twelve channels are used to record two six-bit words dumped in parallel at a word rate of 120 words per second for Mode 1 data, 1920 words per second for Mode 2 data, and 5760 words per second for Mode 3 data. It will be noted from the data in Table 49 that the readout speed for Mode 2 and Mode 3 are identical.

Once started, Mode 1 recorder will not be interrupted until readout, while Mode 2 and Mode 3 recorder will record data on a load-at-will basis. Since this scheme represents many start and stop cycles to fully load the recorder, proper synchronization, to facilitate ground decommutation (decom), becomes a problem for continuous recorder readout. Channel fourteen, previously mentioned, will assure proper data readout sync continuity.

It can be noted from Table 49 that two values of packing densities are employed. Narrowband data, being at a much slower rate than the wideband data, must have a high accuracy since a lost bit would upset the decom sync on the ground for a greater length of time than would be the case for a lost bit in the wide band link. Various tradeoffs are possible between tape length, packing density, and mechanical speed ratios following a thorough recorder-design study.

(4) System Clock Assembly

The system clock will supply all of the timing signals that are required for operation of the communication and data handling system. It will probably be designed to have a plug-in module spare as backup. Figure 38 represents the general important countdown relations. The oscillator need not be extremely accurate if it incorporates manual adjustments which can be made by the crew from time to time.

The basic oscillator frequency will be 276,480 cps. This will be counted down to provide a range of timing signals as follows:

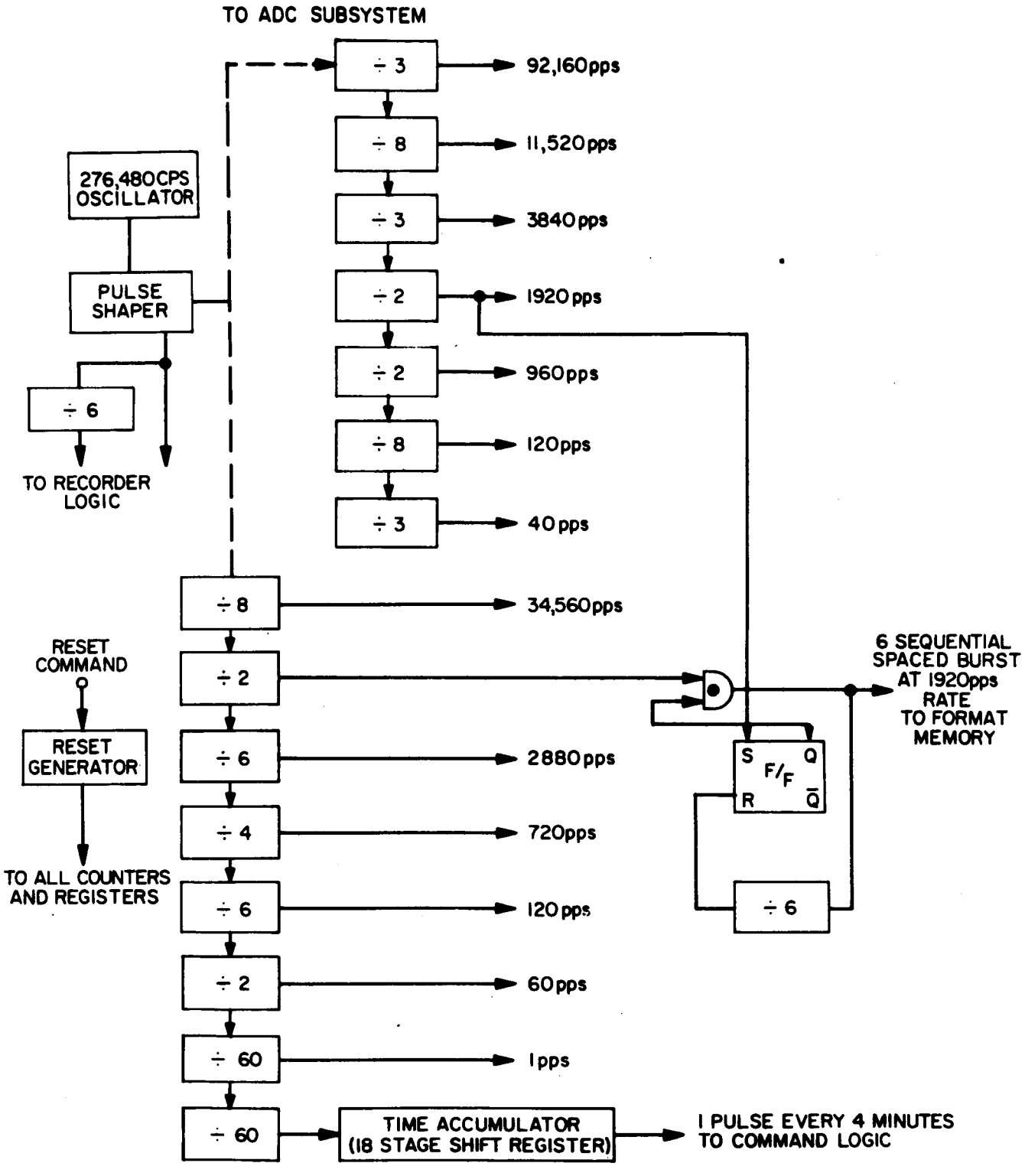

Figure 38. System Clock-Block Diagram

(a) To narrowband data handling unit:

1. 60 pps (rate of two parallel words to recorder)
2. 720 pps for real-time serial data clockout
3. 120 pps to multiplexer for word rate

(b) To wideband data handling unit:

1. 960 pps (rate of two parallel words to recorder)
2. 11,520 pps for real-time serial clockout
3. 6 sequentially-spaced 17,280 pps bursts at 1920 pps rate to format memory

(c) PCM voice over wideband link:

1. 2,880 pps (rate of two parallel words to recorder)
2. 34,560 pps for real-time serial clockout

(d) Analog-to-digital converter:

1. 92,160 pps (word quantization rate)
2. 11,520/2 (voice word rate)
3. 3,840/2 (widebandword rate)
4. $\frac{(11,520/2) + 1}{48}$ (voice-narrowband interlace)
5. $\frac{(3,840/2) + 1}{16}$ (narrowband-wideband interlace)

(e) 1 ppm for time accumulator

(f) Various rates to command memory and PCM decoder

(g) Various rates for guidance and control

(h) Recorder readout

1. 276,480 pps (wideband serial data readout rate)
2. 46,080 pps (narrowband serial data readout rate)

(5) Command Assembly

The command system will resemble that shown in Figure 39. The various subassemblies shown therein will, in most cases, be grouped for quick module replacement. Their circuit design, wherever possible, will be patterned after those used in similar satellite applications. Integrated circuits and transistors will be used to minimize size, weight, and power consumption.

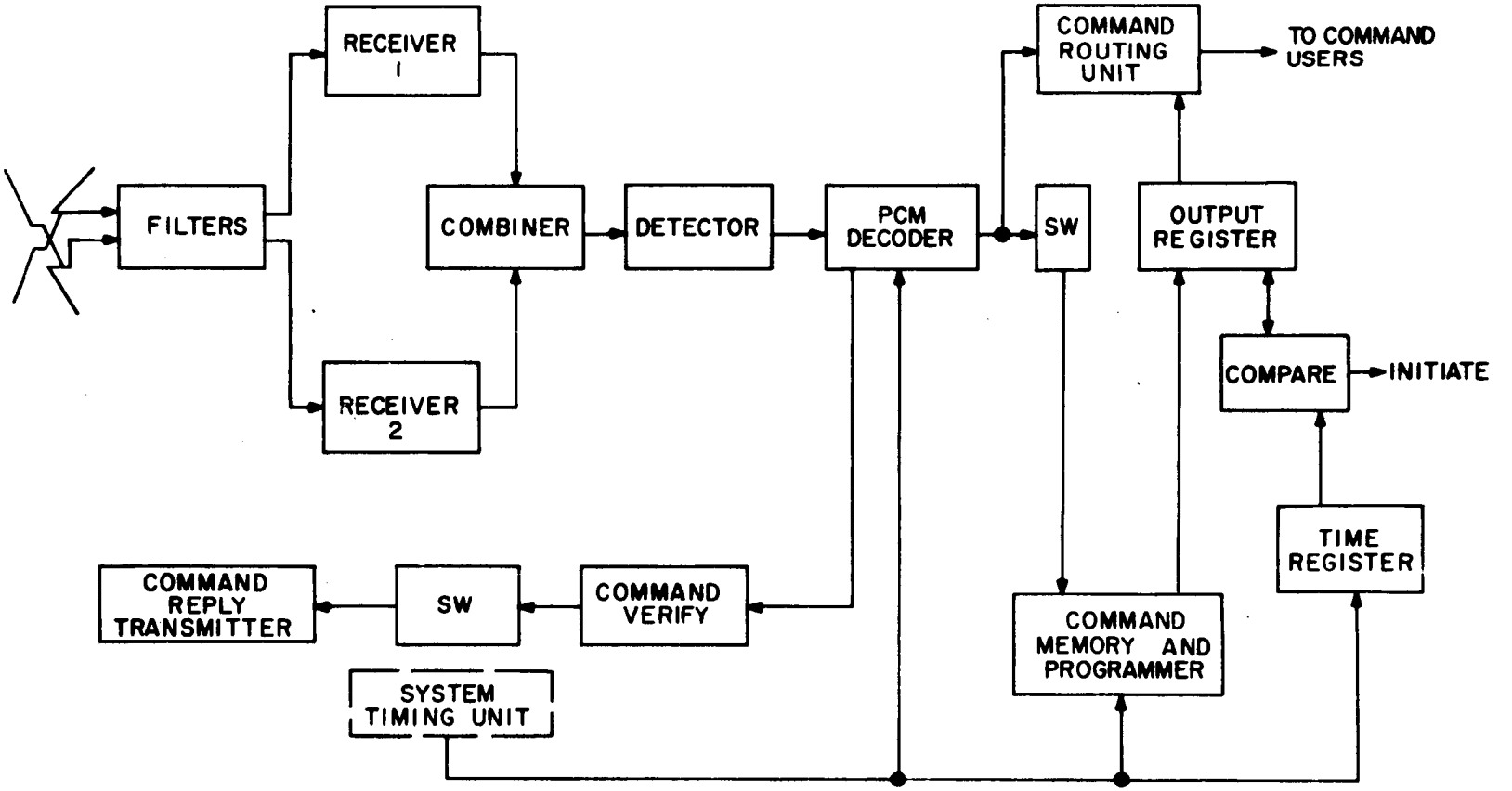

Figure 39. Command Assembly Block Diagram

The capability of the crew to make plug-in replacements will, to some extent, require that the equipment be larger and heavier than that expected for unmanned satellite applications. (This is an important area for tradeoffs.)

Desirable command features which are in keeping with the present state-of-the-art are as follows:

(a) PCM command link

(b) High capacity real time address capability.

(c) Highly flexible stored command program capability.

(d) The storage program should, as designated by the command word logic, be capable of removing and exercising a command from memory at various times. The time variations might be from zero to 256 minutes in four-minute intervals. Following the 256-minute interval the clockout of the command recirculating-non-destruct memory would automatically recycle until the insertion of a new command program. The storage should be capable of operating on discrete and non-discrete commands. A non-discrete command is one having magnitude while a discrete command is one signaling a switching function.

(e) The capacity of the command storage memory should be approximately 100 commands.

(f) Two or more r-f receivers operating in the 400 mc range, arranged to provide polarization diversity reception, followed by a coherent combiner which reduces the gain in the receiver channel receiving the weaker signal and thereby reducing its noise contribution to the combined audio output signal.

(g) The PCM command decoder which follows the receiver detector should accept independent commands or groups of commands of three types: Real-time commands, delayed commands, and programming data for the wide-band data-format-memory. The decoder should determine the type of command being received and route it to the correct address. It should be designed to be compatible with special ground transmission equipment while fulfilling the expected mission requirements.

(h) The command word format chosen should incorporate the following features:

1. Bits for real-time and address.
2. Bits for spacecraft address.
3. Bits to cover the required number of addresses.
4. Bits to route command word to storage.
5. Bits for non-discrete function quantity.
6. Bits for execution time information.
7. Bits for routing data-format-memory loading.

A 32 bit format should be ample to accommodate the above requirements.

(i) The circuitry aboard the spacecraft should be designed to check the command word and its complement on a bit-by-bit comparison and at the same time re-transmit the word to the ground for ground verification. After comparison of the word and its complement, the spacecraft should transmit a "correct receipt" signal to ground thus providing two checks on the transmitted command. Where the command is not verified, the same command should be repeated by the ground station and, if verified, the ground station transmits the next sequential command.

(j) The command synchronization signal and bit rate should be in excess of 1,000 bits per second. The message would be a frequency shift keeping (FSK) modulated signal which uses one tone for a binary one and another tone for binary zero. The sync signal amplitude modulates the FSK signal with a sine wave at the bit rate.

(6) Redundancy and Spare Parts Considerations

The extent to which component redundancy will be employed within the various subsystems of the communication and data handling system cannot be predicted at this time. This element of the design will be subject to continuous revisions as more information is compiled on the required reliability and the available crew time for equipment replacement, repairs and trouble-shooting is determined. In general, present concepts seem to indicate the possibility of having a system with a minimum of directly connected redundant

subassemblies. Each important and critical subassembly would have one or more quick-replacement spare modules in spare storage. These spares could have a limited quantity of sub-spares of plug-in units designed for limited on-board logistic crew repairs in conjunction with detailed troubleshooting instructions between the crew and ground based service personnel via the voice communication link. The trouble-some spares could be replaced by the shuttle in cases where mission objectives are jeopardized.

A tentative listing of major subassembly spares is as follows:

	Quantity
All transmitter types	1 each
Recorder plus electronic logic	1
All receiver types	1 each
Receiver combiner	1
Command decoder	1
Command routing submodules	20 units
Miscellaneous analog and digital gates, high and low level	40 units
Analog-to-digital converter including output registers	1
System clock	1
Time accumulator	1
Wideband data format memory	1

E. BIOMEDICAL AND HUMAN FACTORS DATA CHARACTERISTICS

The selected measurements will impose requirements on the onboard data management system. A data management system has been presented in the preceding subsection that will meet these requirements when modified in the following manner. The word per second capacity should be 3840 words per second which will result in 48 minutes of total tape storage time. The FM tape loop system in the monitoring console will be used for the storage of experimental data during the periods of dumping the PCM recorder via the telemetry link. The FM tape loop will be played back through the TCS discriminators and the output of the individual parameter channels will be recorded on the PCM tape after completion of the dump. The estimated maximum taped experimental time per day per man is 7 minutes of which 6 minutes will be high frequency content analog data. The duty cycle of the broad band data management system is 3% for a six man crew and 12% for a 24 man crew. A capability for up to 20 readouts per day will provide a total experimental data capacity of approximately 13.27×10^8 bits which is a factor of five over the expected total data load of a 24 man vehicle.

1. Psychological Data Quantities

Table 51 provides a means of obtaining estimates of Data Transmission and Management requirements for various combinations of subjects and testing schedules. That is, the effects of a proposed experimental design on data management requirements can be estimated from a summation of the products of: the number of subjects to be administered a given test, the frequency of administration of the test, and the number of bits, digits, and letters that will be generated by the responses. Also the reduction in date transmission requirements made possible by pre-processing of the data can be estimated by using the desired sum and/or sums of squares or threshold data as desired from the appropriate column in the summation equation. Such pre-processing may be accomplished by analog or digital computer desk calculator, or by hand as appropriate. In addition, estimates of the input transmission requirements can be obtained by summation of the products of the frequency of administration of a given test and the input requirements for the given test. For the most part input transmission requirements are

presented based on random selection from a population of stored displays. Onboard generation of requirements, and/or random number tables would reduce input transmission requirements and onboard generation of displays might well reduce storage weight and volume requirements.

a. Coding

No attempt was made to estimate reductions in data quantities achievable by optimum coding. Instead, data quantities are given in terms of the maximum number of letters, digits or bits that might be expected. (Straightforward coding of letters and digits require six and four bits respectively). Provision was made for coded identification of subscores from a given test, however, no provision was made for coded identification of separate tests or extra capacity for error detecting codes.

b. Tracking and One Form of a Steadiness Test

Tracking and a steadiness test do not fit easily into the format used for the rest of the measures and therefore were quoted in terms of analog signal frequencies where appropriate for input and/or raw data and separately in digital form for pre-processed data. One suggested analog to digital conversion would convert signals between 0 and plus 5 volts into 10-bit binary code words at a rate of 50,000 words per second. This gives an amplitude resolution of 1 in 1028 over a 5-volt range or to the nearest .005 volts.

c. Options on Psychological Data Handling Bulk and Weight

Various options can be considered with regard to data handling and information storage methods such as the following:

1) Some displays and records of responses could be on paper which is physically transported to and from space.
2) Some displays could be on microfilm (including operation and maintenance manuals) physically transported.
3) Some information could be stored on magnetic tape and displayed on video or charactron tubes. The tapes could be physically transported or more likely the information

would be telemetered for storage or real time presentation. TV cameras onboard could also allow various ratings to be done on earth instead of in space.

4) Some information could be transmitted over audio links and possibly in the spacecraft copied on some type of reusable "scratch pad".

5) Some information could be "teletyped" again possibly on reusable material in the spacecraft.

6) Some information will be handled and telemetered automatically in analog or digital form.

d. Psychological Data Management

The following are some estimated parameters of possible use in considering the above options:

Television:	Approximately 2 to 4 megacycle bandwidth requirement
Voice:	Approximately 6 kilocycle bandwidth requirement
Papers:	Approximately 3,700 characters per 8-1/2 x 11 page. Approximately 1,850,000 characters per ream Approximately 16 pounds per ream Approximately .11 cubic feet per ream or 3,000 cc
Microfilm:	Roll film approximately 1,000 pages or 2 reams per 100 foot roll Approximately 400 cc per roll, 16 to 1 volume reduction Approximately 280 grams per roll (including reel and can) 25 to 1 weight reduction Microfiche approximately 7,000 pages or 14 reams per 100 sheets

Approximately 700 cc per 100 sheets or 60 to 1 volume reduction

Approximately one-half pound per 100 sheets or 200-300 to 1 weight reduction

Microfilm reader: Portable readers as small as 5 x 8 x 10 inches are available which weigh only 5 pounds and take only 75 watts at 110 volts ac or dc.

Magnetic Tape: In one comparison between film and magnetic video tape it was stated that the resolution of magnetic tape was 1/40th of film resolution (which was quoted as 50-100 line pairs/millimeter).

TABLE 51. PSYCHOLOGICAL DATA AND INFORMATION MANAGEMENT
DATA QUANTITIES: PER SUBJECT - PER TEST ADMINISTRATION
(NON-OPTIMIZED CODING)

Key:
- d.f. - degree of freedom
- ID - identification
- rep - repetitions
- S - sum of
- d - digits
- b - bits
- a - alphabetical characters
- cps - cycles per second

	Input			Output			
				Recommended		Alternate	
Response or Attribute	Measure	Recommended	Alternate	Raw Data	Pre-Processed	Raw Data	Pre-Processed
1) Class 1 Responses & attributes							
a) Sensitivity to spatial and temporal inhomogenities	Acuity	2d slide selection		1 d score		Same	
	CFF			2 d (X10) = 20d cps rep	3 d S X^2 5 d S X^2 = 8 d	Same	
b) Vestibular organ responses and discriminations	Linear accel threshold			2 d accel X10 = 30d 1 d time rep	3d threshold 2d SX^2 3d SX^2 (time) =8d	Same	
	Angular accel threshold			3 d accel 1 d time = 4 d		Same	
c) Kinesthesis thresholds	Position passive			2 d time 3 d counts = 5 d		2 d degrees (X2) = 4 d	
	Active	1d angle 1d button (X10) rep = 11d		1 d angle 3 d time 3 d "release" (X10) time = 61d	1d angle 5d SX (X2) = 27d 8d SX^2 part score	None	
	Rate Passive			DC to 20 cps (X3) excursion and tremor	3d rms (x3) =9d	None	
	Active			2d (x3 x 10) = 60d distance axes rep	3d SX (X3) 5dSX^2 axes =24d		

TABLE 51. PSYCHOLOGICAL DATA AND INFORMATION MANAGEMENT
DATA QUANTITIES: PER SUBJECT - PER TEST ADMINISTRATION
(NON-OPTIMIZED CODING) (cont'd)

	Input			Output			
				Recommended		Alternate	
Response or Attribute	Measure	Recommended	Alternate	Raw Data	Pre-Processed	Raw Date	Pre-Processed
d) Vestibularly produced illustions of orientation	Oculogravic			3d degress (x10) = 30 d	$4dSX_2$ $7dSX^2$ = 11d	3d degress (X10 x 2) = 60d	$4dSX_2$ $7dSX^2$ - 11 d
	Occulogyral			(3d + lb) (x5) = 15d + 5b		(3daccel - 3d rate) (x5) = 30d	
e) Orientation				2d (x7) = 14d rating, scales		Same	
f) Weight or mass discrimination		6b(x40)(10) =2400b	6b(x40x3) = 720b	1d(x11x4x10) = 440d response, delta, standards, rep	2d (x4) = 8d limen standards	6b (x44 x 3) = 792 b I. D., masses. rep	2d (x4) = 8 d limen standards
g) Gross motor coordination	Ambulation			3d time 2d (x5) = 13d response, scale		3 d time (X5) maneuver 2 d (x5x5) = 65 d response, scale, maneuver	
	Pressure suit donning & doffing			3 d time		Same	
	Ballistic aiming			2 d count		2 d time	
	Large item manipulation			2 d time, 2 d rating = 4 d		2 d time (X4) 1 d rating = 12d directions	
h) Judgment				1 d rating (x31) scale = 31 d		60 b checklist	1 dcount (x6) = 6 d scales
i) Ideation				1 d rating (x4) scales =4d			
2) Class 2 Responses & attributes a) Sensitivity to brightness				3 d intensity (x5) rep = 15 d	4 d SX 7 d SX^2 = 11 d	Same	
b) Ability to coordinate visual axes	Heterophorid			1 b vertical or horiz (X2)		Same	
				1 d phoria directions = 2d + = 2b			

TABLE 51. PSYCHOLOGICAL DATA AND INFORMATION MANAGEMENT
DATA QUANTITIES: PER SUBJECT - PER TEST ADMINISTRATION
(NON-OPTIMIZED CODING) (cont'd)

	Input			Output			
				Recommended		Alternate	
Response or Attribute	Measure	Recommended	Alternate	Raw Data	Pre-Processed	Raw Data	Pre-Processed
c) Ability to adapt to intensity level		2d slide selection		1 d score (x5) rep = 5d		Same	
d) Visual field				1 d direction 3d eccentricity$_{(x6)}$ = 24d rep		3d direction	
e) Auditory attributes	Pitch difference thresholds			2d frequency$_{(x50)}$ =100d 1b response +50b	2d threshold(x2) upper & lower =4d	2d frequency$_{(x10x31)}$ pb response rec cps = 310b + 620d	2d threshold (x2) upper and lower = 4d
	Loudness thresholds			1d freq$_{(x7x60)}$=1680d 3d intens freq response	3d intens(x7)=21d freq	None	
f) Depth perception (range)		1d select slide	2d position	1d score		2 d error	
g) Rate of change of depth perception (range rate)		1b(x20x4)=80b direction, trials, distance		3d (x20x4) = 240d trials distances	3d threshold (x4)=12d distance	Same	
h) Form discrimination		3d (x16) = 48d rep selection	3d(x16)	1b response (x16)=16b presented	5b SX	2d blur$_{(x16)}$ items = 64d 2d errors	
i) Motion discrimination threshold	Absolute			3d intensity$_{(x4x10)}$ 1d eccentricity 3d rate, eccentricity, rep =280d	3d intensity (1d eccentricity+ 4dSX+7dSX^2)(x4) =51d	3rd intensity 1d angle$_{(x8x10)}$ 3d rate rep angle = 323d	3d intensity 1d angle$_{(x8)}$ = 35d 3d rate ( ) angles
j) Binocular rivalry				2d count, 2d time = 4d		Same	
k) Time perception		3d selection		4d time (x4) conditions =16d		5d time	
l) Tracking		DC to 2.4cps (x4)degrees of freedom		DC to 2.4 cps(x4) degrees of freedom	3d rms(x4x8) 3d time d.f.	Similar	

TABLE 51 . PSYCHOLOGICAL DATA AND INFORMATION MANAGEMENT
DATA QUANTITIES: PER SUBJECT - PER TEST ADMINISTRATION
(NON-OPTIMIZED CODING) (cont'd)

	Input			Output			
				Recommended		Alternate	
Response or Attribute	Measure	Recommended	Alternate	Raw Data	Pre-Processed	Raw Data	Pre-Processed
m) Reaction time	Simple	1d(x10)=10d delay		3d time (x10) = 30d	4d SX 2d SX^2 = 11d	Same	
	Complex	2b (X60) light 1d (X60) time =120b +60d	2b (x30) light 1d (x30) delay =60b +30d	3d time (x10) = 30d	4d SX 7d SX^2(time) = 16d 2d SX 3d SX^2(errors)	3d time (x30)=90d	5d SX 8d SX^2 = 13d
n) Fine motor coordination	Small item manipulation		1d(x99) = 99d settings	2d count (x2) = 4d conditions		3d count	
	Switching	1d(x99)=99d settings	5b(x120) =600b	3d count		5d time, 2d errors = 7 d	
	Writing	6b(100)=600b		2d count, 2d rating = 4d		Same	
	Digital steadiness			3d count 2d time (x3) holes =15d		5d time, 3d errors =8d	
o) Number facility		1d(x13x10) =130d	3d	1d count		2d count	
p) Memory		4d(x2x10) =80a	4a(x20) 2d(x20) =80a+40d	2d count		2d count	
q) Monitoring		(3b+4d) select time (x10) rep =30b+40D	4d(x10) time, rep =40d	1d count 6d time (x10)=61d rep	1d count 7 dSX 13dSX^2 = 21d	Same	
r) Attention		light| time (x50) rep =250d	(4b + 4d) select time (x50) rep =200b+200d	6d time (x2 x 50) colors, rep = 600d	8d SX (x2) = 44d 14d SX^2	2d count	

2. Biomedical Data Characteristics

Most of the biomedical measurements are dc data and will present no load to the data management system. However, there are some high frequency content analog signals, which are primarily the biopotentials. A sizeable saving in bandwidth can be achieved by suitable coding techniques. The data characteristics of the biomedical measurements are tabulated in Table 52.

TABLE 52. DATA CHARACTERISTICS OF BIOMEDICAL MEASUREMENTS

Measurement	Data Dynamic Characteristics	Coding	Signal Range	Required Accuracy	Sample Rate (6 Bit Word) Words/Sec Raw	Coded	Bits/Second 6 Bit Word Raw	Coded	Maximum Experimental Time Per-Day Per Man	Simultaneous Useage
Mission Safety										
Electrocardiogram	0.1 to 100 cps	Amplitude: P, R, T. Duration: PQ, QRS, QT, R. R.	0 to 20 m.v.	5%	640	30	3840	180	6 minutes	
Blood Pressure	0.0 to 40 cps	Systolic and diastolic dc levels	0 to 20 m.v.	5%	320 or	2	1920	12	6 minutes	Yes
Respiration rate and depth	0 to 8 cps	Duration: Maximum inhalation to max. inhalation	0 to 20 m.v.	5%	80	1	480	6	6 minutes	Yes
Body temperature	0 to 1 cps	-	0 to 5 v	3%	1	1	6	6	1 minute	Yes
Body mass	dc	-	0 to 20 m.v.	3%	1	1	6	6	-	-
Voice	500 to 1500 cps	-	0 to 5 v	5%	5760	-	34560	-	1 minute	No
Urine osmolarity	dc	-	0 - 5 v	5%	1	-	6	-		
Urine glucose	dc	Punched in code	0 - 5 v	5%	1	1	6	6	-	-
Urine proteins	dc	Punched in code	0 - 5 v	5%	1	1	6	6	-	
Urine acetone	dc	Punched in code	0 - 5 v	5%	1	1	6	6	-	
Urine pH	dc	Punched in code	0 - 5 v	5%	1	1	6	6	-	No
Urine bile	dc	Punched in code	0 - 5 v	5%	1	1	6	6	-	
Urine microscopic exam	dc	Punched in code	0 - 5 v	5%	1	1	6	6	-	
Hemoglobin	dc	Punched in code	0 - 5 v	5%	1	1	6	6	-	
Leukocyte Count	dc	Punched in code	0 - 5 v	5%	1	1	6	6	-	No
Differential and morphology	dc	Punched in code	0 - 5 v	5%	1	1	6	6	-	
Required Class 1										
Calcium	dc	Punched in code	0 - 5 v	5%	1	1	6	6	-	
Potassium	dc		0 - 5 v	5%	1	1	6	6	-	No
Nitrogen	dc	Punched in code	0 - 5 v	5%	1	1	6	6	-	
Body water	dc	Punched in code	0 - 5 v	5%	1	1	6	6	-	No
Surface blood flow	0 to 2 cps	-	0 - 5 v	3%	20	-	120	-	6 minutes	Yes
Muscle strength	dc	Punched in code	0 - 5 v	5%	1	1	6	6	-	-
Muscle size and mass	dc	Punched in code	0 - 5 v	5%	1	1	6	6	-	-
Oxygen consumption	0 - 8 cps	-	0 - 5 v	5%	80	-	480	-	1 minute	Possible
Creatine/creatinine	dc	Punched in code	0 - 5 v	5%	1	1	6	6	-	-
Vital capacity	dc	-	0 - 5 v	5%	1	1	6	6	-	-
Blood glucose	dc	Punched in code	0 - 5 v	5%	1	1	6	6	-	-
Reticulocytes	dc	Punched in code	0 - 5 v	5%	1	1	6	6	-	-
Bilirubin	dc	Punched in code	0 - 5 v	5%	1	1	6	6	-	-
Abnormal hemoglobins	dc	Punched in code	0 - 5 v	5%	1	1	6	6	-	-
Desired Class 2										
Sodium	dc	-	0 - 5 v	5%	1	1	6	6	-	-
Inorganic phosphorus	dc	Punched in code	0 - 5 v	5%	1	1	6	6	-	-
Ballistocardiogram 6 channels (Cardiac output)	0 - 40 cps	Integration of acceleration "I", "J", "K" waves	0 - 20 v	5%	320x6 (1920)	20x6 (120)	11760	720	1 minute	Yes
Extracellular Fluid	dc	Punched in code	0 - 5 v	5%	1	1	6	6	-	-
Blood volume	dc	Punched in code	0 - 5 v	5%	1	1	6	6	-	-
Mineral corticoids	dc	Punched in code	0 - 5 v	5%	1	1	6	6	-	-
Phonovibrocardiogram	0.1 - 500 cps	High frequency filtering and spectral integration	0 - 20 m.v.	5%	3840	20	23040	120	6 minutes	Yes
Pulse wave velocity	0 - 8 cps	-	0 - 5 v	5%	80	-	480	-	6 minutes	Yes
Electroencephalogram	2 - 100 cps	Integral of alpha, beta, gamma and delta components of action currents $\int x_2$, sec.	0 - 20 m.v.	5%	640	80	3840	480	1 minute	
Electromyogram	2-200-5000 cps	Rectification and spectral integration	0 - 20 m.v.	5%	1280	80	7680	480	2 minutes	-
Glucocorticoids	dc	-	0 - 5 v	5%	1	1	6	6	-	-
Catecholamines	dc	-	0 - 5 v	5%	1	1	6	6	-	-
Expired gas analysis	0 - 8 cps	-	0 - 5 v	5%	80	-	480	-	1 minute	-
End Respiratory CO_2	0 - 2 cps	-	0 - 5 v	5%	20	-	120	-	1 minute	-
Bleeding time	dc	Punched in code	0 - 5 v	5%	1	1	6	6	-	-

F. BIOMEDICAL AND HUMAN FACTORS LABORATORY

1. Introduction

The biomedical and human factors measurements to be made on a manned earth orbiting space station will require a comprehensive laboratory facility. To study the influence of the measurements upon the major design requirements of the vehicle, a conceptual design of the required biomedical and human factors laboratory was prepared. The layout presented in Figure 40 is for a MORL type vehicle with an outside diameter of 220 inches. It is capable of satisfying the mission safety monitoring and experimental measurement requirements for six men. Gross floor area is 62.5 square feet and (with storage) laboratory rack volume is 65.3 cubic feet. Gross weight of all consoles (less apparatus) is 140 lb, including 50 lb for the clinical laboratory.

The laboratory consists of three major areas: biomedical interrogation, biomedical and human factors monitoring, and clinical laboratory. The biomedical interrogation area contains the ballistocardiogram platform, exercise/interrogation chair, and medical dispensary. The biomedical and human factors monitoring console consists of three sections, a physiological instrumentation section, a data display and control section, and a psychological instrumentation section. The clinical laboratory contains a microscopy and qualitative screening facility and a bioanalytical facility.

To meet the requirements of the large 12 to 24 man space stations, the laboratory must be expanded. The large non-rotating space station would require mission safety monitoring belt packs and limit display meters for each crew member, and more extensive sample freezer and storage facilities. The basic laboratory is adequate to satisfy the experimental measurement requirements. The large rotating space station with zero g hub, presents special requirements. One centralized clinical laboratory and one data display and control console are required. They are best located in one of the rotating radial arms. Samples of blood and urine would be transferred from the various habitable areas of the space station to the clinical laboratory. Sample transfer could be accomplished with a pneumatic tube propulsion system. Each habitable area would have a rack of physiological and psychological instrumentation but with a central data storage and computation facility.

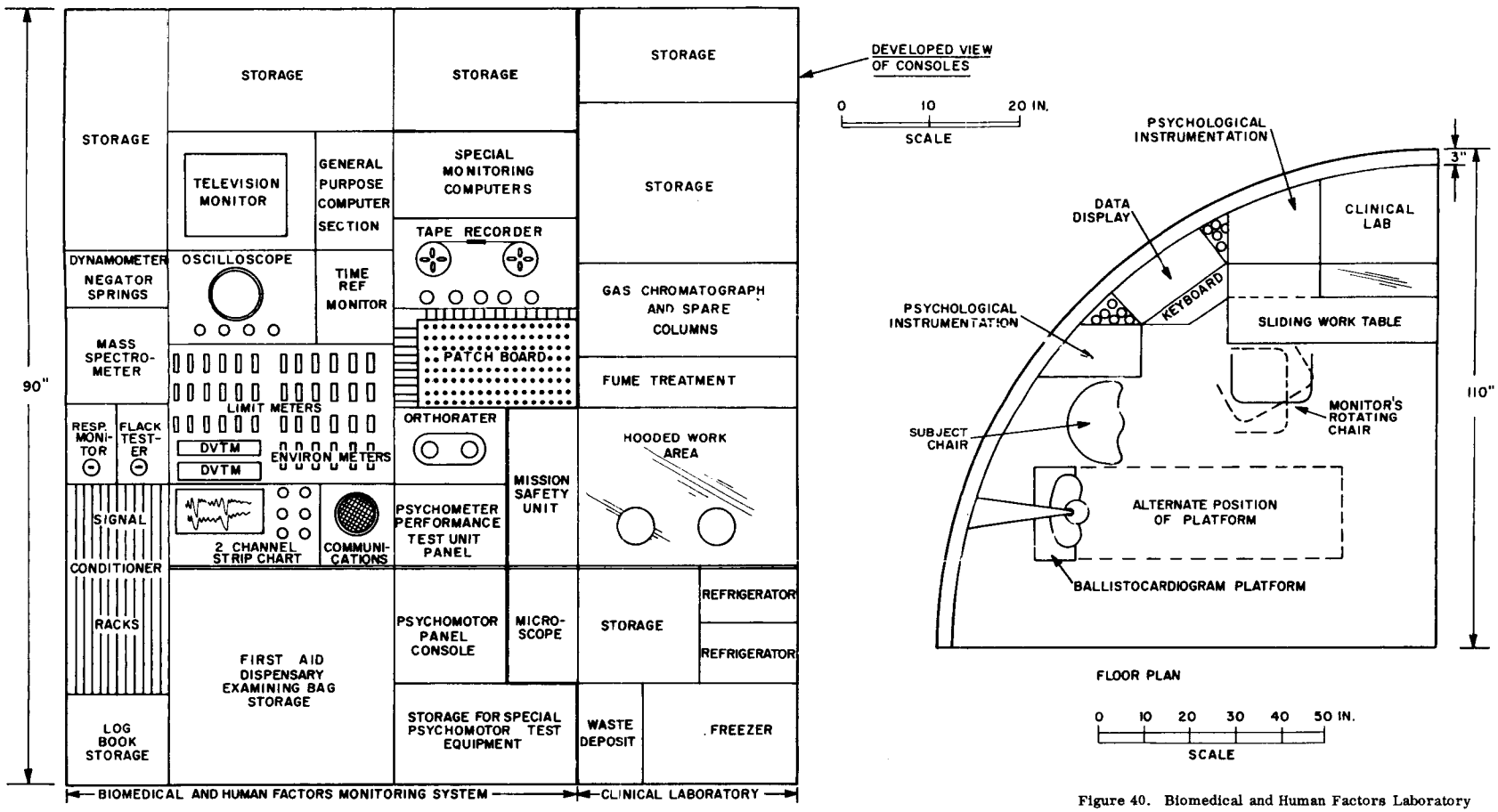

Figure 40. Biomedical and Human Factors Laboratory

The following sections describe in detail the concept, components, and specifications of the biomedical and human factors laboratory. A tabulation of power weight and volume estimates for the laboratory components appears at the end of the section

2. Biomedical Interrogation

The biomedical interrogation section of the laboratory is a multipurpose area. It will provide an exercise and interrogation chair, a ballistocardiogram platform and a medical dispensary.

a. Exercise/Interrogation Chair

To facilitate the instrumentation of crew members and the acquisition of physiological data a chair is suggested. The subject is strapped into the chair, the necessary transducers affixed and the test run begun. The chair is adjacent to the physiological instrumentation rack to provide ready access of the Flack tester, pneumograph respiratory monitor and signal conditioners to the subject. The rack mounted signal conditioners for the desired measurements can be mounted on the back of the exercise chair. This will shorten the length of the transducer leads to the signal conditioner. Lead signal noise and encumbrance will be minimized. Alternatively, the signal conditioner belt pack can be worn by the subject. In both cases signal conditioner power and data signals are transmitted by hardwire between the subject and data control patch board. The chair can also be used for various exercises. The base is a modified torsion bar. The wall area about the chair has grip bars for the subject, who, gripping them and pulling or pushing must exert force against the torsion bar. Also the back of the chair is hinged and spring loaded to provide extension and flexion exercises of the vertebral column. The seat of the chair is in the shape of a bicycle seat to enable full pumping leg motion. A pedal ergometer mounted on the bulkhead and capable of several positional placements can provide arm and leg exercise. The ergometer is force loaded with synchronized negator springs.

b. Ballistocardiogram Platform

The ballistocardiogram platform is mounted against the wall bulkhead. The subject is strapped into the body-contoured platform and the

ballistocardiogram obtained. With the platform coupled by springs to the floor and ceiling, body mass measurements are made. The platform also can be swung down into a horizontal position (i.e. parallel to the floor) and used as a physical examination and minor surgery table.

c. Medical Dispensary

The medical dispensary must supply the medical supplier and equipment for the crew during its stay in space. A physician crew member is a prime requirement. If one is not onboard then key personnel must be taught definitive medical procedures: e.g., how to remove a superficial foreign body from the front of the cornea and how to clean and sew up, clip or tape-close a common laceration. A manual that outlines simple medical procedures and therapeutic regimens should be provided. A recommended manual is "The Ship's Medicine Chest and First Aid at Sea," by U. S. Public Health Service and War Shipping Administration, Rev. 1955 (U. S. Government Printing Office). The dispensary for six men for six months should include the following:

1) Medications:

6 Morphine syrettes (1/2 grain)
36 Codeine sulfate (1/2 grain)
360 Acetylsalicylic acid (5 grains)
36 Pyribenzamine tabs (50 mg)
72 Gantrimycin
100 Synsillin (synthetic oral penicillin, 250 mg)
8 oz. Elixir of terpin hydrate with codeine
1 Nupercaine ointment 1% 4 oz. tube
16 oz. Bismuth and Paregoric
36 Dextro-amphetamine tabs (5 mg)
15 oz. squeezebottle pHisoHex
2 Cortisone eye ointment (1 oz.)
1 Sodium sulfaacetamide eye ointment 10% (1 oz.)
4 Fluor-i-strip (Doko Chemical Co. fluorescein paper)
36 Sodium amytal (200 mg)
36 Meprobamate (400 mg)
36 Donnatal tabs

2) **Bandages:**

36 4 x 4 inch gauze pads

72 Bandaids

4 1-inch Rollerband

4 2-inch Rollerband

8 Eye pads

4 Triangular band

4 2-inch Adhesive tape

4 3-inch Ace elastic bandage

100 Swab applicators

3) Equipment:

1 Bandage scissor

1 Straight scissor

1 Tweezer

1 Eye spud

1 Triangle tip metal applicator

1 Straight Kelly hemostat

200 Tongue blades

1 Dental mirror

1 Dental probe

1 Dental tweezer

1 Extracting forceps

1 Hypodermic syringe

3. Biomedical and Human Factors Monitoring System

In recognition of the requirements for reliability, maintainability, and miniaturization, the monitoring system should be comparatively simple, with data conversion kept to a minimum. The versatility of the system should, however, permit the observation of all psychophysiological parameters believed to be of significance in monitoring the personal safety of those participating in extended space missions. It should also provide a means of visually monitoring subjects on a centrifuge or engaged in extravehicular activities. In view of the recommendation that a physician be on board, it is assumed that the system

will be operated by highly skilled personnel. The measurements necessary for mission safety, however, could be made by laymen who were given pre-flight instruction in medical instrumentation with the described system. In addition to ensuring safety, the system must lend itself well to extended experimental programs in space medicine.

a. System Concept

The monitoring system is designed for flexibility in consideration of its applicability in space stations of different sizes and configurations. It can be used for routine physical and psychomotor examinations, in experimental programs, and it can be used for continuous monitoring during critical operations and tasks. Instrumentation can be either direct or remote. Data can be directed to the monitoring console by either "hard wire" or near-field telemetry. Data from the clinical laboratory will also have access to the system by either a manual punch-in code or analog output from the spectrocolorimeter, gas chromotograph and ionic electrodes. As shown in Figure 41, the proposed monitoring console can be sectionalized into separate instrument packages which will enable use in a modular fashion, depending on the size and mission of the space stations. The monitoring system will consist of the following instrumentation racks or areas:

1) Physiologic Signal Conditioners
   a) Mission safety unit - one per man
   b) Class 1 measurement unit - one per station
   c) Class 2 measurement unit - one per station
2) Displays, data flow programmer, communication - one per station
3) Remote visual monitoring - one per station
4) Psychological test equipment - one per station
   a) Mission safety unit
   b) Class 1 measurement unit
   c) Class 2 measurement unit

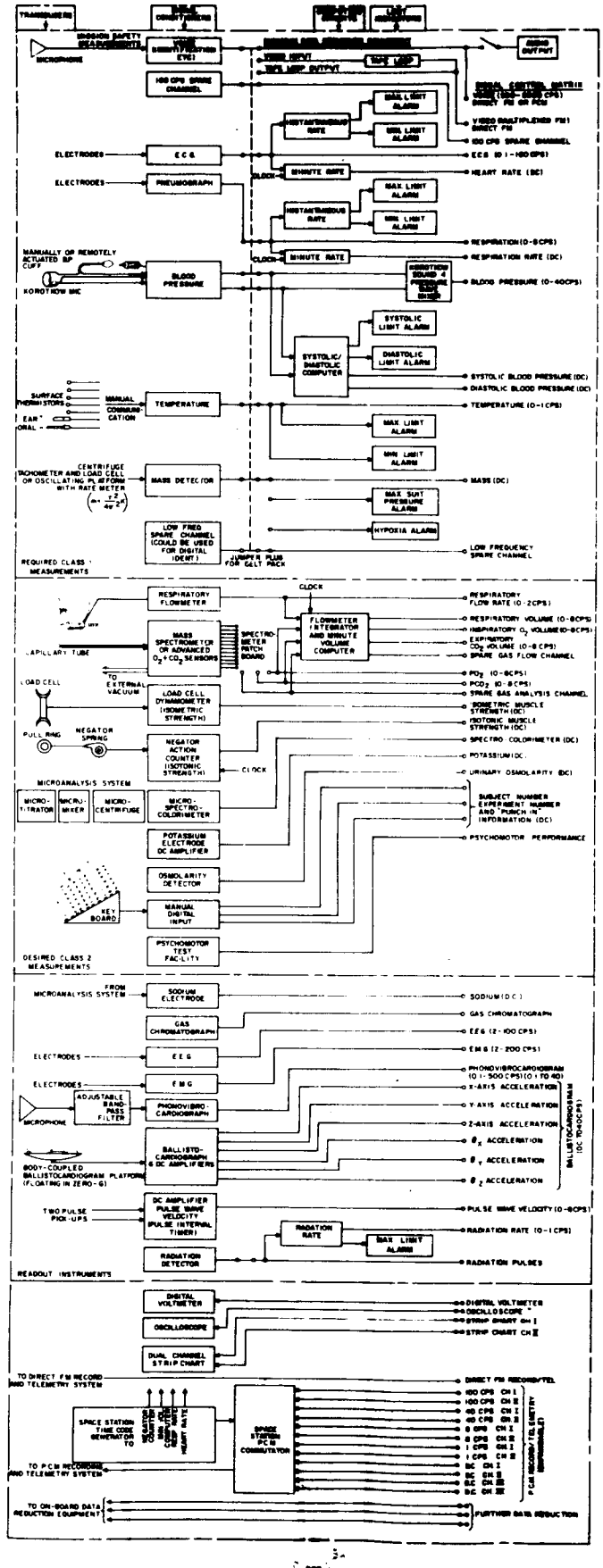

Figure 41. Biostat Monitoring Console - Block Diagram

(1) Unit for Mission Safety Measurements

These measurements are those physiological and psychological parameters which must be monitored frequently, and in some cases continuously to ensure mission safety. These parameters would be monitored frequently throughout the duration of the mission. In addition, their response to provocative tests, weightlessness, and conditioning regimens would be determined. The mission safety measurements to be made on all space station occupants would be the following:

1) Body mass
2) Core temperature
3) Blood pressure
4) Respiration rate and depth
5) Heart rate and rhythm
6) Higher mental processes (judgment) through a voice channel

The raw data from each signal conditioner associated with the above parameters will be directed to a matrix board or patch panel for further routing. Data from certain measurements will be computed and reduced. The mission safety measurement package should also contain limit alarms and indicators for continuous automatic surveillance of the safety of personnel engaged in dangerous activities. A tape loop system is also included to enable a review of conditions leading to a limit transcendence.

The signal conditioner sub-package, containing the "front-end" electronics of the mission safety package, can be removed from the main console and hard-wired from a remote location. Examples of such an application would be its use on a small centrifuge, and on the back of the exercise conditioning chair. Data from the centrifuge package would be routed through slip rings to the monitoring console. Signal conditioner sub-packages can also be placed in each section of the large space stations for remote observation at the main central monitoring console.

Since critical operations, such as docking and extravehicular activities, require the wearing of pressure suits, a belt pack signal

conditioning system is also required. This belt pack must be compatible with the central monitoring system. The belt pack signal conditioners would be used in lieu of the mission safety signal conditioner sub-package (Figure 42).

Three modes of signal transmission are to be used with the belt pack system:

1) Direct "hard wire"
2) Multiplexed FM "hard wire"
3) Near-field telemetry

Direct hard wire coupling between the belt pack signal conditioners and the vital measurement package would be the simplest transmission mode. The signal integrity is best preserved by this method and thus it is recommended that this mode of transmission be used whenever possible.

A near-field FM/FM telemetry system should also be provided. The add-on belt transceiver should be capable of transmitting seven channels of physiological and environmental information, in addition to a two-way voice link with the central monitoring console. The transceiver sub-package for reception of the belt pack data can be designed to "plug-in" to the position normally occupied by the vital measurement signal conditioner sub-package.

In certain situations where distance or high ambient electrical noise is encountered, it may be desirable to transmit the multiplexed FM (video) signal via a single hard wire. This mode could be used in tethering operations.

When the transceiver, for reception of belt pack data, is placed in the monitoring console, its signal discriminators feed directly into the patch panel and data reduction system. The telemetry video (multiplexed) signal would be directed into a tape loop system. In the event that a limit alarm sounded, the operator could review the information preceding the alarm transcendence by playing the tape loop back through the discriminators. This data, when indicated, would also be directed to the onboard FM tape storage system for later telemetry to ground.

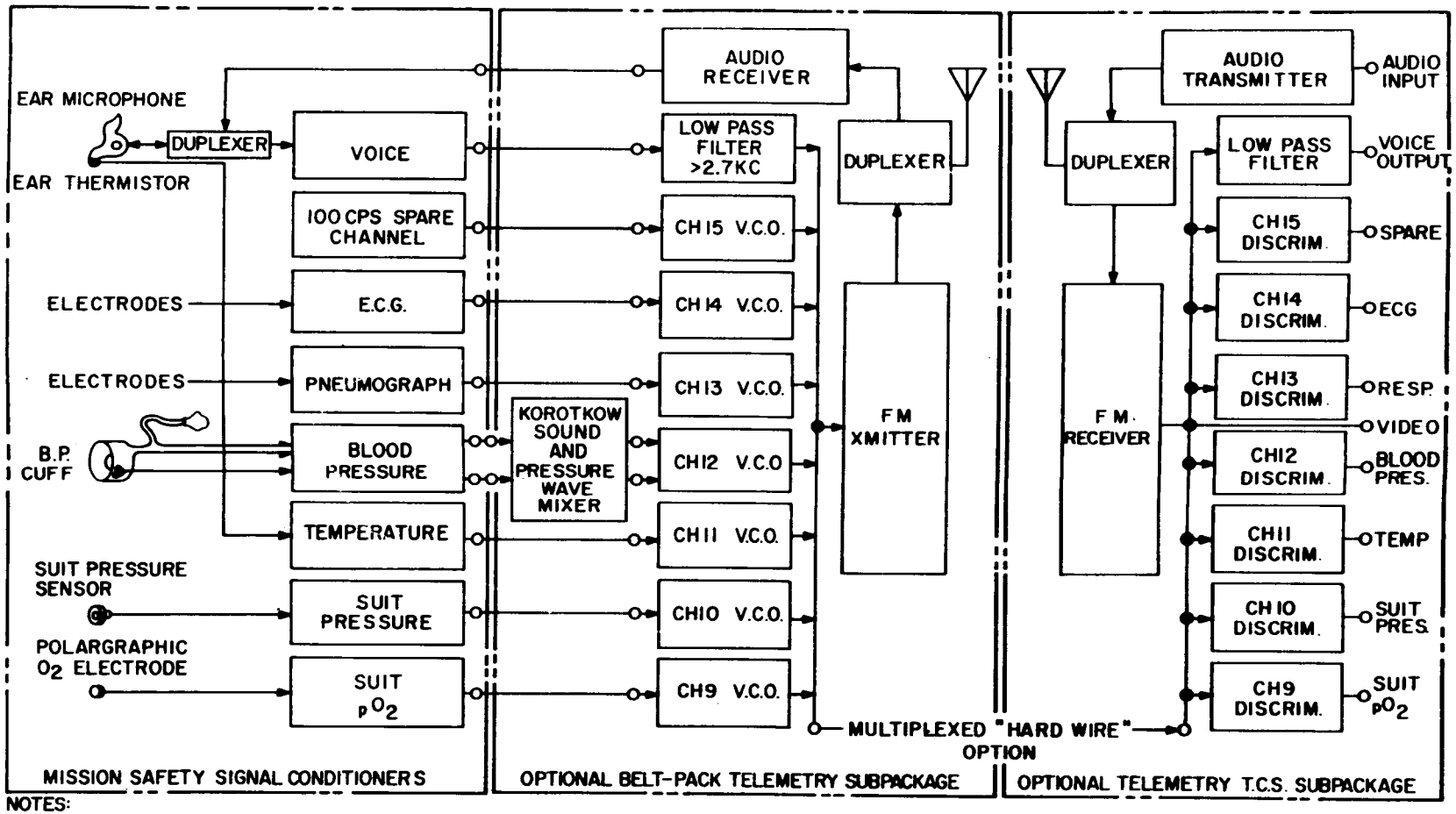

NOTES:
1. BELT-PACK SYSTEM IS USED IN LIEU OF MISSION SAFETY MEASUREMENT PACKAGE IN MONITORING CONSOLE.
2. EIGHT SIGNAL CHANNELS ARE AVAILABLE. PNEUMOGRAPH AND BLOOD PRESSURE MEASUREMENTS WHEN REQUIRED.
3. R.F. TELEMETRY TRANSMISSION MAY BE SUBSTITUTED BY DIRECT "HARD WIRE" TO CONSOLE.

Figure 42. Belt-Pack Mission Safety Measurement System

It is recommended that only essential information be transmitted from the belt pack. During most tasks requiring pressure suits, only the following parameters need be monitored:

1) Voice
2) Heart rate and rhythm
3) Temperature
4) Suit pressure
5) Suit pO_2

Baseline data, on all of the mission safety measurements during pressuring suit operation should, however, be obtained to validate the selection of the above measurements.

The system should be capable of monitoring respiration and blood pressure if desired. The belt pack should be designed to permit the substitution of other signal conditioners if required by a particular experimental task. Although the belt pack is conceived to be of primary use in a pressure suit, it can be operated independently from the suit.

The mission safety packages can be operated singly or in multiple depending on the number of subjects to be simultaneously monitored.

(2) Unit for Required Class 1 Measurements

The required class 1 measurements and methods have been discussed in Section IV. They are to be obtained as part of the experimental program described in Section V. These measurements are of the following general types: (1) physiological measurements of circulation, respiration and muscle strength, and (2) psychological performance measurements.

The physiological measurements will be made utilizing the surface temperature signal conditioners, pneumotachometer, mass spectrometer or suitable fast response O_2 and CO_2 sensors and muscle dynamometers. One unit per space station is required except in the large rotating space station with zero gravity hub which will require two units. Measurements on test subjects will be primarily made at two locations, the centrifuge and the exercise and biomedical interrogation chair.

The psychological measurements will be obtained with the psychomotor performance test panel, modified orthorater, and special test equipment which are described in the next sub-section.

b. Psychomotor Performance Test Panel

An important aspect of the mission of the space station is to study human performance under space conditions (with particular emphasis on zero gravity). A standardized performance evaluation system is essential. To satisfy this requirement for objective, quantitative evaluation of human performance, a psychomotor performance testing system is proposed. This self-contained system, presents a series of problems of controlled difficulty, scores the responses as they are made, cumulates the score for any given program and the scores could be telemetered to a ground station on command. Weight, size, power requirements and compatibility with available telemetering channels are important design considerations.

This equipment presents the following tasks:

1) Arithmetic Computation

A measure of cognitive function and organization, presenting three 3-digit numbers in an in-line configuration. The third set is subtracted from the sum of the first two sets and the answer recorded on a set of dials to the right of the display. The equipment is capable of varying display time as desired.

2) Pattern Discrimination

A measure of spatial perception, presenting a pattern of lights in a 6 x 6 matrix. After a predetermined display time and a determined "off" time, a second pattern is presented which is either the same as or different from the first. Pattern difficulty can be varied from very easy to very difficult. The subject is required to indicate only if the two patterns are the same or were different.

3) Scale Position Monitoring

A measure of alertness, utilizing four vertical scales with different zones of "tolerance." The subject is required to detect any scale out of tolerance whenever the event occurs.

4) Auditory Vigilance

A monotonous on-off signal is presented through a headset. The subject must detect a slight change in the duration of the on-off cycle time.

5) Warning Lights

Five red and five green lights are positioned around the panel. The green lights are normally on; the red lights are normally off. Any change must be corrected by pushing an appropriate button near the light to be corrected. This item is scored in terms of the cumulative time that the green lights are off and the time the red lights are on.

6) Probability Monitoring

Four dials are arranged along the upper edge of the panel. The indicators for these dials (meters) oscillate around the 12:00 o'clock position with random excursion of the oscillation on each indicator. Individually, the mean-position of the oscillating indicator may shift from the 12:00 o'clock position. The subject must detect the shift and its direction and take corrective action through a three position toggle switch for each meter.

7) Tracking

A displacement is created in a two-axis display. This displacement may be corrected and the indicator returned to normal position through an aircraft-type stick.

The various tasks are presented in relative frequencies based on one or a combination of several types of consideration. For example, the relative frequencies of task presentation may be adjusted to give equal time for each task (thus attempting to take both set-up code length and solution time into account) or equal "information" may be presented in each task (thus attempting to take relative difficulty into account), or an equal number of presentations may be made of each task (thus attempting to take reliability of scores into account).

Experience at Republic with the present psychomotor performance testing system (PPTS) allows some rough estimates of the time required for solution of easy items and difficult items.

Table 53 lists the problem types and shows the set up time in seconds and the time in seconds allowed for solution.

TABLE 53.

SET UP TIME AND SOLUTION TIME FOR PSYCHOMOTOR PERFORMANCE TEST PANEL TASKS

	Set Up Time in Seconds	Approx. Solution Time in Seconds	
		Easy	Difficult
Task 1 - Arithmetic	8.0	9.0	16.0
Task 2 - Pattern	5.2	9.2*	15.2
Task 3 - SPM	0.8	2.0	3.5
Task 4 - Auditory		2.3**	4.1
Task 5 - Warning Lights	0.6	0.5	2.0
Task 6 - Probability	0.6	2.0	8.0
Task 7 - Tracking	1.0 one axis 2.0 two axis	2.5	5.0

* Includes display time

** Includes critical signal time

The present Psychomotor Performance Test Panel is a large bulky instrument. Therefore a design was studied of a testing panel with capabilities similar to the present Republic system, and maintaining the same basic logic but using present day solid state microelectronic hardware. This stage of technology is expected to be quite conservative in terms of 1968-69 projected electronic technology, in weight, volume and power requirements.

The planned system and its operation is indicated in the block diagram, Figure 43. The figure demonstrates the flow and theory of operation as follows. Information for performing psychological tests on board the space station are received from a ground station via voice communication. A man at

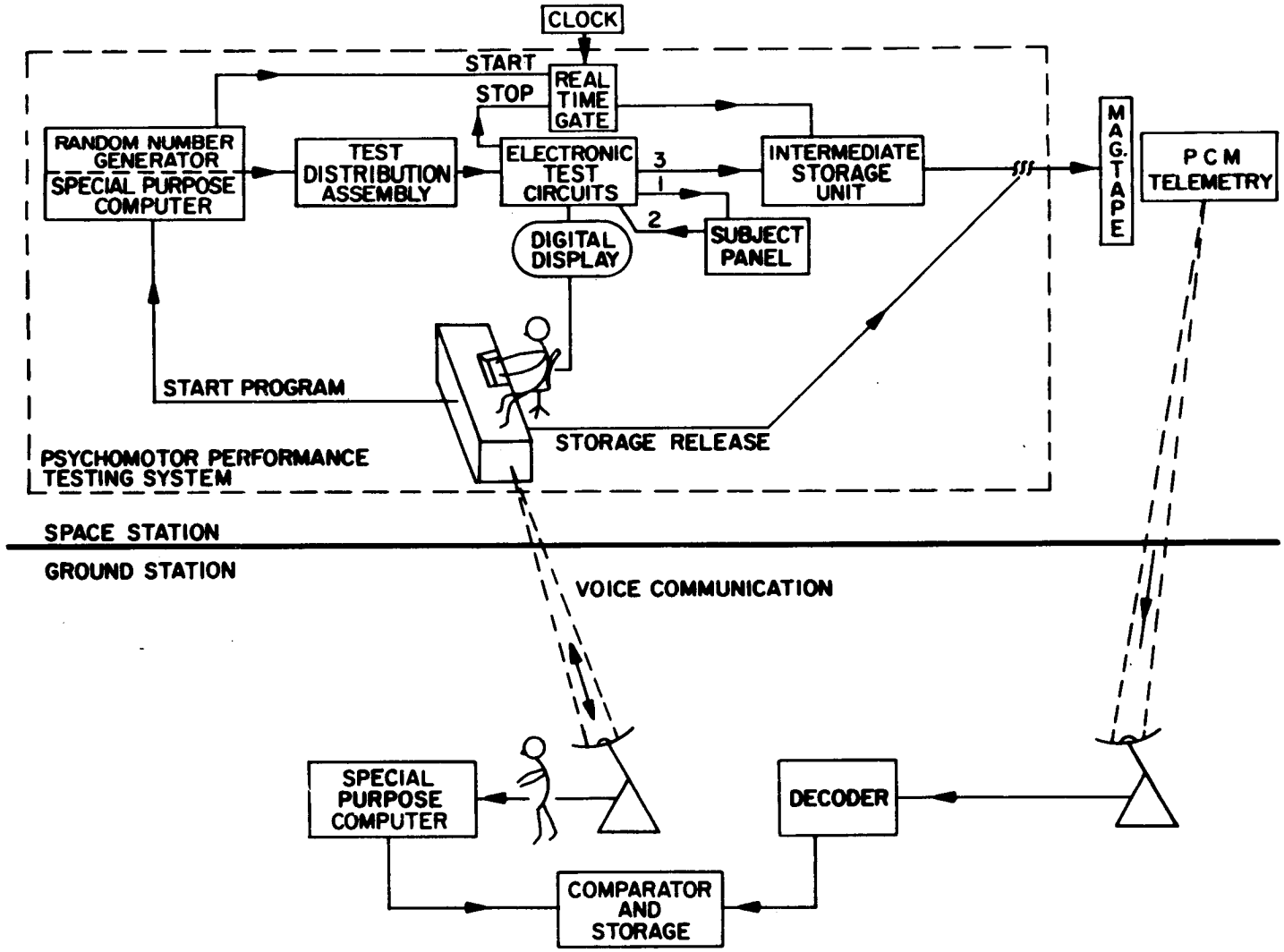

Figure 43. Psychomotor Performance Testing - Block Diagram

a control panel in the station completes the communication link. He has at his disposal controls for inserting test data into a random number special purpose computer. This results in a test program which is fed to a test distribution assembly (logic). This unit routes the specific test to the electronic test circuits. The indicators on the subject panel are activated in accordance with the test program. The response to tests by the subject are sent back into the electronic test circuits and displayed on digital readout equipment. The readout is viewed by the controller and can be recorded. This information of the tests can be evaluated and transmitted back to the ground station via voice communication. Test data is also routed into an intermediate storage unit in binary form and held. The storage elements are capable of storing up to 1,000,000 bits and the power requirements to hold storage is negligible. A 60,000 bit storage unit (of the type proposed) has been built and is undergoing tests.

This unit is capable of storing information for several hours. At some designated time, the data which has been stored in the intermediate storage unit will be released by a test technician and placed on magnetic tape. Transmission of test data to the ground station is accomplished via a telemetry link which is part of the space station. The following is an estimate of the system console size.

1) Length: 24"
2) Height: 36"
3) Depth: 12"
4) Weight: 400 lbs
5) Power: 1000 watts
6) Volume: 6 cu ft

Packages in the console include:

1. Random number generator or special purpose computer
2. Test distribution assembly
3. Real time gate
4. Electronic test circuits
5. Digital display
6. Intermediate storage unit

Based on the available information, 115,200 bits are required for programming. The weight of the computer determined by the number of bits necessary is calculated to be approximately 350 lbs. However, in reference 142 it is predicted that within this year, single-function spacecraft computers will be built that will weight 10 lbs, take up 0.15 cu ft, and use 50 watts. The figures quoted for the computer as used in the testing system are founded upon equipment which presently exists (micro-electronic modules). In the event that the aforementioned spacecraft computers will be available, a possibility exists for a considerable size, weight and power reduction for this subsystem.

An alternate method of programming intended to reduce the size of the unit is suggested as follows:

1) Preprogrammed tapes or cards to be stored aboard the space station. Selection of a particular test to be made by ground station command (voice communication) and responses to this command carried out by a test technician on board the space station.

2) New tapes or cards may be shuttled to the space station at the discretion of the ground station.

3) The special purpose computer will be replaced by a simple input to read-in the program.

This will result in a console having the following specifications:

1)	Weight of console:	55 lbs	
2)	Size of console:	Length	10 in.
		Height	30 in.
		Depth	12 in.
3)	Volume:	2.08 cu ft	

4) Power requirements reduced to approximately 300 watts (including 70% conversion factor)

With the degree of electronic miniaturization predicted to be possible by launch date, it is quite possible that the full programming requirements may become available for the same penalties as the above limited system.

The subject panel is illustrated in Figure 43 and a list of the corresponding components is tabulated on page 381. The components are existing hardware. Human factors considerations have been included in the panel design. Any further reduction in dimensions of the subject panel would decrease readability of the panel instrumentation. The following dimensions apply: 12 inch length x 7 inch height x 3 inch depth for a volume of 0.146 cu ft. Alternate problems may be adapted to the basic PPTS so that certain tasks such as simulated reentry could be performed.

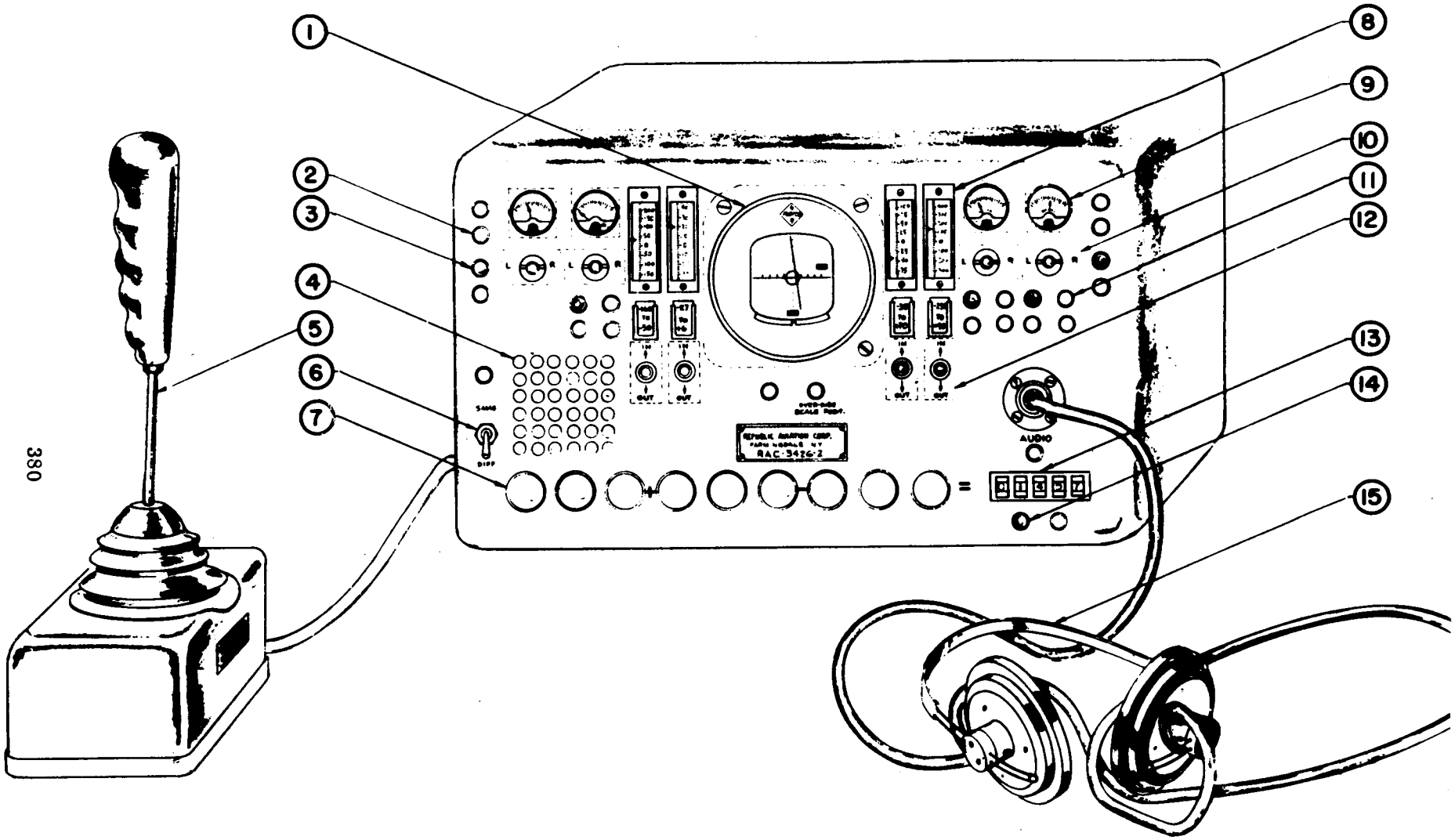

Figure 44. Psychomotor Performance Tester

TABLE 54.

PSYCHOMOTOR PERFORMANCE TEST PANEL COMPONENTS

Name	Quantity	Part Number	Manufacturer
1. Attitude Indicator	1	-	Narco
2. Push Button Switch (Ultra Miniature)	13	39-1	Grayhill Inc., La Grange, Ill.
3. Sub-Sub Miniature Lamp (Red)	5	252-9951-971	Dialight Corp., Brooklyn, N.Y.
4. Sub-Sub Miniature Lamp (Amber)	36	252-9951-973	Dialight Corp.
5. Control Box Assembly	1	-	Madigan Electron Corp., N.Y.
6. Toggle Switch	1	T 2104	Controls Co. of America, Falcroft, Pa.
7. Standard Miniature Nixie Tube	9	-	Burroughs Corp., Plainfield, N.J.
8. Edgewise Meter	4	MCE 1	Honeywell Precision Meter Division
9. HCM Miniature Indicator	4	HCM 3/4	Honeywell Precision Meter Division, Manchester, New Hampshire
10. Momentary Toggle	4	MS 35058-27	JBT Instruments Inc., New Haven, Ct.
11. Sub-Sub Miniature Lamp (Green)	5	252-9951-972	Dialight Corp., Brooklyn, N.Y.
12. Toggle (Two Position)	4	-	Controls Co. of America, Falcroft, Pa.
13. Digi Switch	1	300	The Digitran Co., Pasadena, Calif.
14. Sub-Sub Miniature Lamp (Blue)	3	252-9951-974	Dialight Corp., Brooklyn, N.Y.
15. Head Set (Dyna-Twin)	1	-	Telex, Minneapolis 16, Minn.

c. Unit for Desired Class 2 Measurements

The desirable Class 2 measurements and methods have been discussed in Section IV . They are to be obtained as part of the experimental program described in Section V. These measurements are of the following general types:

Physiological measurements of circulation, respiration, muscle electrical activity, and brain electrical activity

Psychological performance measurements

The physiological measurements will be made utilizing the ballistocardiograph signal conditioners, phonovibrocardiogram signal conditioner, pulse wave velocity computer, pneumotachometer, mass spectrometer and electroencephalogram signal conditioner. One unit per space station is required except in the large rotating space station with zero gravity hub which will require two units. The measurements will be made on subjects in the centrifuge and in the exercise and biomedical interrogation chair.

The psychological measurements will be obtained with the psychomotor test panel, modified orthorater and miscellaneous test equipment.

The Class 2 measurements will use the data display facities provided.

(1) System Description

The concept of a biomedical and human factors monitoring console that will be capable of acquiring all of the selected measurements has been presented in the previous section. This section describes the system components.

(a) Sensors and Signal Conditioners

The basic requirements for instrumentation of this type is that physical, physiological, psychomotor, and chemical parameters be converted accurately to electrical analog signals. In consideration of the measurements previously listed, the following sensors and signal conditioning equipment will be utilized as components of the system.

1) Mission Safety Measurements:

a) Belt Pack:

Two-way microphone and associated amplifier for:

Communication

Assessment of higher mental processes

ECG electrodes and amplifier for the measurement of:

Heart rate

Heart rhythm

Pneumograph for measurement of:

Respiration rate

Respiration depth

Blood pressure cuff and associated signal con- for measurement of:

Systolic blood pressure

Diastolic blood pressure

Thermistor probe with bridge and amplifier system for measurement of temperature

Pressure sensor and amplifier for internal suit pressure

Polarographic pO_2 electrode and associated signal conditioner located in pressure suit for hypoxia warning

b) Console Mission Safety Measurement Signal Condition Subpackage:

Microphone and audio amplifier for:

Communication

Assessment of higher mental processes

Vocal report of physical exam observation

ECG electrodes and amplifier for the measurement of:

Heart rate

Heart rhythm

Pneumograph for measurement of:

Respiration rate

Respiration depth

Blood pressure system for the indirect measurement of:

Systolic blood pressure

Diastolic blood pressure

Thermistor probes with associated bridge and amplifier for measurement of:

Core temperature (oral)

Mass measurement system

2) Console Unit for Required Class 1 Measurements:

Flowmeter with integrating circuit for respiration volumetric measurements such as "vital capacity"

Mass spectrometer in combination with the flow meter and integrator in determining:

O_2 consumption

(Mass spectrometer may also be used to determine total body water utilizing a method employing Deuterium Oxide - "Heavy Water")

Load cell dynamometer for measurement of isometric muscle strength

Negator spring and minute counter for measurement of isotonic muscle strength

Psychomotor Performance Test Panel

Modified Orthorater

Special Psychological Test Equipment

Keyboard for test identification, subject identification and for digital input of the following tests:

Microscopic hematologic and urinary analyses

Abnormal blood pigments

Urine reagent test strips of sugar, acetone, pH, bile, proteins

Results of physical examination and history (optional)

Psychological tests

Muscle size with tape measure

3) Console Unit for Desired Class 2 Measurements:

EEG electrodes and associated amplifier

EMG for muscle recruitment rate

Phonovibrocardiograph with adjustable bandpass filter and proper microphone

Ballistocardiograph operating in zero-g area of spacecraft. Cardiac output interpretation to be obtained

Interval timer for pulse wave velocity measurement

Psychomotor Performance Test Panel

Modified Orthorater

Special Psychological Test Equipment

d. Data Reduction and Handling

As has been stated, data reduction and conversion has been keep at a minimum in the interest of simplicity and reliability. Essential reduced parameters will be:

Instantaneous heart rate (used only for limit alarm control)

Minute heart rate (average heart rate for a one minute interval)

Instantaneous respiration rate (average respiration rate for a one minute interval)

Systolic blood pressure

Diastolic blood pressure

Integrated total respiration gas flow (total minute volume)

Integrated pO_2 (O_2 minute volume)

Integrated pCO_2 (CO_2 minute volume)

All information channels may be routed in any direction through the signal control matrix. Data may also be directed out of the console into any on-board data reduction system.

e. Data Display

Two types of display are required: Constant analog display of certain vital measurements, and "patch-in" display to any channel desired. The vital measurements constantly displayed will be those parameters on which limit alarms may be set. These measurements will be:

Heart rate
Respiration rate
Systolic blood pressure
Diastolic blood pressure
Body temperature
Suit pressure
Suit pO_2

Limits will be adjustable by manually setting limit indicators on the analog meter displays. When a limit is exceeded, both auditory and visual alarms will be energized.

The system readout instruments, which may be patched into any channel, will be:

Digital voltmeter
Oscilloscope
Dual channel strip chart

The digital voltmeter would be used to monitor precision d.c. measurements (e.g., temperature). Since strip-chart paper must be carefully conserved in a space station, all measurements would be first monitored on the oscilloscope before making a permanent strip chart recording.

f. Data Recording

The monitoring console contains only one recorder. This is a time referenced tape loop system which temporarily stores multiplex vital measurement information. In the event a limit is exceeded, reference may be made to the tape loop for a review of conditions leading to the limit transcendence. All permanent and semi-permanent recordings will be made in on-board tape storage systems. It is assumed

however, that both PCM and FM recording systems will be available. Recording of data must be carefully managed so as not to overload the recorders between "dumps." Data management requirements for the selected measurements and a system concept designed to fulfill these requirements are discussed in subsections C and D.

g. Remote Visual

There are two distinct approaches to the problem of close-up visual observation of a subject being rotated in a centrifuge.

An observer at the biomedical monitoring console must be able to observe and determine the physical well-being of a subject mounted on a centrifuge. This centrifuge can be external, subjected to environmental conditions of space or internal, in the space station.

One approach consists of an optical system whereby the subject in viewed with an optical periscope located on the axis of rotation of the centrifuge and rotating at the same angular velocity. The image within the periscope is then folded 90° and directed along the axis of rotation of the centrifuge. The rotating image is then directed through an optical derotating device such as a Dove or Koenig Prism to obtain a stationary image which can then be routed via an optical link to the observation site. If desired, this optical image can be monitored by a small television camera to allow for transmission of the image to a ground station for further study.

The second approach would make use of a small battery-powered television camera, and its associated near field transmitter, placed on the centrifuge near its hub. This system would use a receiver located off the centrifuge to pick up the video signal emanating from the low power transmitter rotating with the subject. This received signal would then be routed via cable to a CRT monitor located at the biomedical monitoring console. If desired, the image can be relayed to a ground station. In this case the electrical signal being applied to the observer's CRT monitor screen can be electronically routed to a transmitter or tape storage for transmission to the ground. The small battery powered television camera and receiver are portable and would permit monitoring anywhere within or without the space station. Hardware is currently being developed by RCA Corporation for Project Apollo. Specifications are as follows:

	Power	Volume	Weight
Camera and Control Unit (Integrated)	10 watts	80 cu in.	5 pounds
Modifier and Transmitter	10 watts	80 cu in.	5 pounds
Battery Pack (rechargeable)		20 cu in.	2 pounds
Receiver	10 watts	80 cu in.	5 pounds
Total:	30 watts	260 cu in.	17 pounds

The central monitoring console specifications correspond to an available miniaturized unit. They are as follows:

1) Dimensions, 8x10x5 inches
2) Volume, 400 cubic inches
3) Power, 10 watts
4) Weight 10 pounds

h. Maintenance and Repair

There are certain general principles of maintenance and repair applicable to space stations which also have specific relevance to biomedical and psychological instrumentation and associated equipment.

Redundance of subsystems is planned its only a limited extent under the weight limitations existing at arbital injection. This means that at least one member, and preferably more than one member of the crew should be a highly-trained maintenance specialist with intensive electronics technology experience. He would be responsible for all repairs to instrumentation, communication and data handling equipment, and electrical systems in general.

Complex fine repair work should be amid where possible by suitable design philosophy.

In planning for maintenance functions, volume should be allocated close to the station housekeeping display panels. Plastic enclosures equipped with band openings may be described for fine work so that small parts do not get lost during repairs.

Plans should be made to supply spare parts and major components at planned logistics resupply mission dates. All such spares should be capable of modular plug-in to minimize crew dexterity requirements in making repairs.

Service manuals for all equipment on hand should be reproduced on micro-cards or microfilm for protection viewing in order to save weight and volume.

4. Clinical Laboratory

The biochemical measurements in the Mission Safety, Class 1 and Class 2 categories will require a clinical laboratory facility in the space station. This laboratory will consist of a microscopy and qualitative screening facility primarily for mission safety measurements and a bioanalytical and sample freezer and storage facility for Class 1 and 2 measurements. The total clinical laboratory occupies 29.0 cu ft of which 1.7 cu ft are for the microscopy and qualitative screening facilities.

a. Microscope and Qualitative Screening Facility

The following measurements will require the use of a microscope and qualitative screening facility:

Mission Safety Measurements:	Class 2 Measurements:
Leukocyte count	Urine and serum potassium
Differential count and morphology	
Urine sediment	
Urine pH, glucose, proteins, acetone, bile	

Class 1 Measurements:	Supplementary Measurements:
Reticulocyte count	Erythrocyte count
Platelet count	
Urine and serum potassium	Platelet count
Urine and serum calcium	

The following equipment will constitute the facility:

1) Microscope: Inclined binocular three objective (10X, 43X, 97X), revolving nosepiece, 10X eye piece, adjustable substage condenser, mechanical stage, adaptable for photomicroscopy with a Polaroid-Land camera, and self-contained base illumination. (20 watts).

   a) Weight: 10 lbs
   b) Size: 8wx8xLx12L, 0.50 ft^3
   c) Power: 20 watts

2) Support Equipment: Hemacytometer including counting chamber and Trenner automatic diluting pipets, capillary tubes, slides, cover glasses, stains, staining baths, microcentrifuge , reagent test strips, potassium electrode, sodium electrode, Sulkowitch reagent, micropipets, microtestubes

   a) Weight: 15 pounds
   b) Size: Divide x 16 deep x 16 high inches, 1.2 ft^3
   c) Power: 17 watts

3) Total weight, volume and power specifications for the facility are:

   a) Weight: 25 lbs
   b) Volume: 1.70 ft^3
   c) Power: 37 watts
   d) Bench area required is 20" wide x 18" deep

b. Procedures and Special Handling Techniques:

The acquisition of blood samples for smears and counts can be done utilizing standard techniques as capillary tubes and diluting capillary pipets. No special handling technique is required for either blood acquisition, preparation

of the smear, or filling the counting chamber. Special techniques must be developed for staining the smears. The Giemsa stain and technique would appear to lend itself more readily to implementation in weightlessness than the Wright stain. Staining baths in which the fixative, stain, and wash are cycled through is a possible approach. The problem of cleaning pipets, slides, cover glasses, and counting chambers must be considered. Again a cycling wash bath constructed of non-wettable polyethlene is a possible approach. A glass slide can be used as a mounting over which a thin layer of transparent plastic (such as Saran Film) is affixed. The plastic is disposable, eliminating the need for many slides and washing.

The acquisition of the urine specimen and slide preparation can be done with pressure titrators or capillary tubes. No special technique is required. A centrifuge is required to spin down the urinary sediment.

The techniques for use of the reagent test strips and Sulkowitch reagent have been discussed in the measurement section. The potassium and sodium electrodes can be located in either the above facility or the bioanalytical facility.

c. The following measurements will require the use of the bioanalytical facility:

Mission Safety Measurements:

Hemoglobin (alternate)
Hematocrit

Class 1 Measurements:

Calcium, urine/serum
Potassium, urine/serum
Nitrogen, urine NPN
Body water (alternate)
Creatine/creatinine, urine
Glucose, blood
Bilirubin, serum
Abnormal hemoglobin pigments

Class 2 Measurements:

Sodium, urine/serum
Inorganic phosphorus, urine/serum
Cardiac output (alternate)
Extracellular fluid
Blood volume
Mineral corticoids
Glucocorticoids
Catecholamines

These measurements are primarily obtained by spectrophotometric techniques which involve sample preparation, mixing with specific reagents, developing of color reaction, and measuring the light absorbance. Several systems are available for making these clinical spectrophotometric measurements. The Beckman Model 150 Ultramicro Analytical System is described as a representative example of the bionalytical facility required. It offers the following advantages: (1) small sample volumes required, (2) no vein punctures necessary, (3) dimensionally small, light weight, low power consuming, (4) minimum dishwashing required, (5) speed and simplicity of techniques of operation and analysis, (6) pressure delivery of samples and reagents to enable operation in a weightless environment, and (7) accuracy.

The other components of the bioanalytical system are the gas chromatograph, potassium and sodium electrodes and the sample freezer and storage unit.

(1) Ultramicro Analytical System

The components of this system are:

1) Spectrocolorimeter:

A direct reading combination spectrophotometer and colorimeter with a stationary wettable microcuvette, emptied by a suction pump. It provides for wavelengths from 400 to 650 mμ in 15 mμ increments. Weight: 14 pounds; dimensions: 11 x 8 x 5 inches (0.25 ft^3); power: 23 watts. Desired modifications include wavelength 250 to 800 mμ in 5 mμ increments and adaptation for photofluorimetry.

2) Microcentrifuge:

A high force microcentrifuge capable of handling up to 20 polyethylene micro test tubes. Weight: 10 pounds; dimensions: 7 x 7 x 9 inches; Power: 12 watts. No modifications or additional capabilities

are required. It will be used for obtaining microhematocrit and spinning down urinary sediment in addition to the spectrophotometric determinations.

3) Microtitrator:

An integrated microtitrator capable of delivering small volumes from a storage burette into cups while vibration stirring them. Weight: 5 pounds; Dimensions: 11 x 3.5 x 5 inches (0.11 ft^3); Power: 6 watts. Modifications necessary will include a means of retaining the titrated solution within the microtitration cup. A self-sealing diaphragm over the top of the cup is a possible solution.

4) Micromixer:

A small volume mixer utilized for mixing serum and reagents in a micro test tube. Weight: 3 pounds; Dimensions: 6 x 3 x 3 inches (.03 ft^3), Power: 5 watts. No modifications are required.

5) Micropipets:

The micropipet is a plastic bottle and dome to which is attached a non-wettable, non-breakable polethylene pipet. The pipet are self-adjusting and filled and emptied by hand pressure against the sides of the bottle. No modifications of this equipment are anticipated.

6) Micropaks and Chempaks:

These units contain the necessary equipment and chemical reagents for each of the procedures.

The reagents will be stored in a special laboratory refrigerator. Estimated weight of the sample pipets, reagents, standards, etc. is 5 pounds and estimated volume 0.5 ft^3.

The system described above could be adapted for onboard use. However, it does require a skilled technician to operate and does not have the complete flexibility of usage that a comprehensive onboard microanalytical system should have. The recent introduction of automated analytical systems as the Technichon "Auto Analyzer" and the Research Specialties Automated Spectrophotometry System have proven the feasibility of having a fully automated analytical laboratory for use in the clinical laboratory. The units currently available were not considered for the present application because of reliability and maintenance problems, large weights, volumes or excessive power requirements. However, a possible area of research and development is a spaceborne automated analytical laboratory if the results of early flight experience indicate that repetitive onboard blood and urine quantitative analyses are required. This is not anticipated.

Special procedures, facilities, and handling techniques are required to support the described bioanalytical system. They include adequate work bench area, storage volume, ventilation of fumes, reagent/sample disposal, lighting and cold storage for reagents. Included are the following:

1) Hooded Work Surface Area: 25 x 28 inches are considered minimum area for equipment and work area.

2) Storage Volume: Two cubic feet of storage area are adequate. The bioanalytical instrumentation is permantly mounted in the hooded area.

3) Ventilation: Provision must be made to vent the small amount of fumes and gases from the samples and reagents. A possible approach is a vented hood with entry ports

(for the experimenter's aims) evacuated by a fan which exhausts into the environmental control catalytic burners. A bed of neutralizing agents is used to neutralize acid and other toxic fumes.

4) Wash and Distilled Water: Provision must be made for a supply of wash water and a means of handling it. Use of light weight disposable microtitration cups and tubes will minimize washing requirement. However, provision must be made for a distilled water rinse. Two liters of distilled water for 6 men for 3 months will be required. This will also satisfy simple dilution requirements. Use of a pressurized bladder for delivery of the water is a suggested approach.

5) Reagent/Sample Disposal: Provision for used reagent and sample disposal are required. The disposal system must be capable of handling 2.5 liters for 6 men for 3 months. The disposal liquid will consist of blood, urine, reagents, and distilled water.

6) Lighting: Inside the hood the lighting level shall be 30 foot candles.

7) Refrigerator for Cold Storage: A refrigerator is required for the storage of reagents, standards, etc. It shall have a storage capability at 40°F ± 2°F of 0.5 ft^3 with inside dimensions of 9 x 8 x 12 inches and provide daily access. Preliminary design of a refrigerator with these specifications indicate that a unit operating off of the spacecraft glycol cooling loop would weigh 10 pounds including the necessary fixtures. Outside dimensions are 10 x 9 x 13 inches.

(2) Gas Chromatograph

The gas chromatograph is suggested for the measurement of adrenal steroids and catechol amines. In addition it has sufficient flexibility for measurements of respiratory gases (oxygen, carbon dioxide, water vapor), alcohol (body water), glucose, abnormal hemoglobin pigments and additional biochemicals as required. The chromotograph has been described in the measurement section. It can be mounted above the ultra-microanalytical hooded area. This will provide access to the fume control unit.

(3) Potassium and Sodium Electrodes

The cationic responsive glass electrodes are to be considered part of the bioanalytical facility. However, as indicated, they can be incorporated into microscopy and qualitative screening facility if no on-board quantitative bioanalytical system exists.

(4) Sample Freezer and Storage Unit

As indispensable component of the clinical laboratory is the sample freezer and storage refrigerator unit. This is required for both Class 1 and Class 2 biochemical measurements whether or not onboard analytical facilities are available.

A preliminary design for the specimen freezer and storage refrigerator was made to cover the requirements for six men over a period of 90 days. The following criteria were used:

1) 90 milliliters of blood and urine specimens to be frozen and stored every two days for two weeks.
2) 90 milliliters of blood and urine specimens to be frozen and stored every week for three months.
3) 150 milliliters of unspecified specimens to be frozen and stored every month for three months.
4) The initial temperature of all specimens is 37°C.

The following assumptions were made:

1) All specimens have the thermodynamic property of water.

2) All specimen containers are cylindrical quartz with 0.050 inches thick walls and 150 milliliters volume. (This volume includes holders and brackets inside the freezer).

3) The refrigerator is cubic, with a stainless steel liner, and a fiberglass outer shell. The space between the liner and outer shell is filled with super insulation and sealed under vacuum conditions. A vacuum can also be obtained by venting to space.

The required inside dimensions of the storage refrigerator is a cube of 6.75 inches. (The specimens are assumed to be stored in square pigeon-holes). The specimens are assumed to be dipped in liquid nitrogen and quick frozen to the boiling point of nitrogen at cabin pressure. The specimen is then stored. The thickness of the super insulation is such that the temperature of the specimen is allowed to rise, as heat leaks into the storage unit, but not exceed their thawing temperature within 90 days. The thickness of the insulation to accomplish the above task is estimated to be 1 inch. Therefore, the outside dimensions of the refrigerator is estimated to be 8.75 inches on each side.

The method of loading the storage refrigerator is by a single hole just large enough to accept the specimen container. A labyrinth-type interior of the unit permits feeding specimens and storing them in succession.

The nitrogen required to freeze each specimen and pre-cool the storage refrigerator is estimated to weigh thirty (30) pounds. The total weight of the subcritical nitrogen system is estimated to be forty-three (43) pounds. This weight includes the weight of the nitrogen, the expulsion bladder and the necessary valves, but does not include the pressurizing gas and its container.

The weight of the freezer, refrigerator unit, specimen containers, nitrogen gas system and nitrogen is estimated to be 57 pounds, and to occupy approximately 1.5 cu. ft.

The above system allows complete mobility inside the station when the vacuum of space is not used to provide the vacuum between the liner and the outer shell of the refrigerator.

The volume of the storage refrigerator can be reduced by evaporating nitrogen within the unit to provide an additional heat sink for the heat leakage. The additional nitrogen and controls necessary to accomplish this may offset the reduction in volume and weight of the refrigerator. With a nitrogen vent for this scheme, the refrigerator must be placed in a fixed location.

5. Power, Weight and Volume Estimates

The components of the biomedical and human factors laboratory have been described in the preceeding subsections. A tabulation of power weight and volume estimates of the laboratory components is presented in Table 55 .

TABLE 55 . POWER, WEIGHT AND VOLUME ESTIMATES FOR BIOMEDICAL AND HUMAN FACTORS LABORATORY

BELT PACK: MISSION SAFETY TELEMETRY MONITORING 1/crew member	Power Requirements (Watts)	Weight (lbs)	Volume (cu in.)
Transducers:			
Ear Assembly	0.002 watts	0.06 lbs.	0.8 in^3
Electrodes & Leads	-	0.2	2.0
Suit Pressure Sensor	-	0.2	1.0
O_2 Electrode	-	0.1	0.5
Total Transducer	0.002	0.56 lbs	4.3
Signal Conditioners:			
Voice	0.10	0.13	1.1
ECG	0.10	0.13	1.1
Pneumograph	0.11	0.13	1.1
Temperature	0.08	0.13	1.1
Suit Pressure	0.06	0.1	0.9
Suit pO_2	0.06	0.1	0.9
Total Sig. Cond. Subpackage	0.51	0.72	6.2
Belt Harness & Misc. Hardware	-	1.0	96.0
Hardwire Cable	-	0.8	16.0
Total "Hardwire" Belt Pack	0.51	3.08	122.5
Telemetry Subpackage:			
Seven VCO's	.42	0.7	5.5
Low Pass Filter	-	0.1	0.75
FM Transmitter	0.8	0.3	4.5
Audio Receiver	0.14	0.2	4.5

TABLE 55. POWER, WEIGHT AND VOLUME ESTIMATES FOR BIOMEDICAL AND HUMAN FACTORS LABORATORY (cont'd)

BELT PACK: Telemetry Subpackage cont'd:	Power Requirements (Watts)	Weight (lbs)	Volume cu in.
Duplexing System	0.4 watts	0.1 lbs.	0.75 in
Antenna System	-	0.3	3.0
Case & Connectors	-	0.3	1.0
Battery Pack	-	1.0	7.8
Total Telemetry Subpackage	1.76	3.0	27.8
Total Telemetry Belt Pack	2.27	6.08	150.0
Telemetry TCS Subpackage:			
Seven Discriminators	23.0	4.2	80.0
Low Pass Filter		0.1	0.75
FM Receiver	0.14	0.2	4.5
Audio Transmitter	0.8	0.3	4.5
Duplexing System	0.4	0.1	0.75
Antenna System		0.3	3.0
Case and Connectors		0.8	6.5
Total TCS Subpackage	24.3	6.0	100.0
Total Mission Safety Telemetry Monitoring Per Man	26.6	12.08	250.0
FIXED SITE: PACKAGE FOR MISSION SAFETY MEASUREMENTS			
Physiological Transducers:			
Microphone		0.2	1.0
Electrodes and Leads		0.2	2.0
Blood Pressure Cuff		0.5	30.0
Remote Cuff Actuator	2.0	0.8	5.0
Thermistor Probes		0.2	1.0
Mass Measurement Platform		20.0	1728.0
Total Transducer Weight	2.0	21.9	1767.0
Signal Conditioner Subpackage:			
Voice	0.10	0.13	1.1
ECG	0.10	0.13	1.1
Pneumograph	0.11	0.13	1.1
Blood Pressure	0.15	0.13	1.1

TABLE 55. POWER, WEIGHT AND VOLUME ESTIMATES FOR BIOMEDICAL AND HUMAN FACTORS LABORATORY (cont'd)

FIXED SITE: Signal Conditioner Subpackage: (cont'd)	Power Requirement Watts	Weight (lbs)	Volume cu in.
Temperature	0.08	0.13	1.1
Mass Detection	0.10	0.13	1.1
Case and Connectors		0.3	1.0
Total Signal Conditioner Subpackage	0.64	1.08	7.6
Associated Equipment:			
Audio Output System	2.0	0.8	48.0
Instantaneous Heart Rate Computer	0.2	0.2	2.0
Minute Heart Rate Computer	0.6	0.5	5.0
Instantaneous Respiration Rate Computer	0.2	0.2	2.0
Minute Respiration Rate Computer	0.6	0.5	5.0
Systolic/Diastolic Computer	0.6	0.5	7.0
Tape Loop	20.0	15.0	600.0
Matrix Board		1.0	20.0
Limit Meters		3.0	100.0
Cabinet, Wiring, and Miscellaneous		8.0	50.0
Total Associated Equipment	24.2	29.7	839.0
Total Mission Safety Physiological Measurement Package	26.84	52.7	2613 cu in./ 1.51 cu ft
Psychological			
Re-entry Simulation Computer	20	40.0	2.00 cu.ft.
Microscopic and Qualitative Screening Facility	37	25.0	1.70 cu.ft.
Total Mission Safety Psychological Package	57	65.0	3.70 cu.ft.
Total Mission Safety Fixed Package for Station	83.84	117.7	5.2 cu.ft.

TABLE 55. POWER, WEIGHT AND VOLUME ESTIMATES FOR BIOMEDICAL AND HUMAN FACTORS LABORATORY (cont'd)

REQUIRED-CLASS 1 MEASUREMENTS INSTRUMENTATION IS ONE PER STATION	Power Requirements (Watts)	Weight (lbs)	Volume (cu in)
Transducers:			
Flow Sensor and Mask		1.0	20.0
Load Cell Dynamometer		1.0	25.0
Signal Conditioners:			
Respiratory Flowmeter	1.5	0.5	4.0
Mass Spectrometer	40.0	18.0	1000.0
Dynamometer Amplifier	0.08	0.08	0.9
Negator Action Counter	0.2	0.2	2.0
*Modified Orthoraterand Slides	50	27	2.46 cu. ft.
*Special Psychomotor Test Inst.	50.33	118.5	5.59 cu. ft.
Sample Freezer/Storage Unit		57.0	1.50 cu. ft.
Spectrocolorimeter	23.00	14.0	0.25 cu. ft.
Microcentrifuge	(Included in Mission Safety Qualitative Facility)		
Microtitrator	6.0	5.0	0.11 cu. ft.
Micromixer	5.0	3.0	0.03 cu. ft.
Reagents and Distilled Water		10.0	0.5 cu. ft.
Refrigerator		10.0	0.5 cu. ft.
Potassium Electrode and Amplifier	(Included in Mission Safety Qualitative Facility)		
Associated Equipment:			
Flow Integrator and Volume Computer	0.6	0.5	7.0
Matrix Board		1.0	20.0
Digital Input System	0.3	2.0	80.0
Digital Voltmeter	10.0	10.0	600.0
Oscilloscope	12.0	13.5	850.0
Strip Chart Recorder	20.0	20.0	850.0
Console Power Supply	20.0	5.0	500.0
Battery Charger for Belt Pack	3.0	0.5	64.0
Cabinet, Wiring, and Miscellaneous for Complete Lab.		140.0	450.0
Total Required Class 1 Measurement Instrumentation	242.0	458.0	13.5 cu. ft.

* Estimates based on "OFF-THE-SHELF-EQUIPMENT" and with suitable miniaturization, considerable reductions possible.

TABLE 55. POWER, WEIGHT AND VOLUME ESTIMATES FOR BIOMEDICAL AND HUMAN FACTORS LABORATORY (cont'd)

DESIRABLE-CLASS 2 MEASUREMENTS INSTRUMENTATION IS ONE PER STATION	Power Requirements (Watts)	Weight (lbs)	Volume (cu in.)
Transducers:			
Electrodes and Leads		0.2	2.0
Phonovibro-Microphone		0.2	1.0
Ballistocardiograph-Platform	(Same Platform as Used in Mass Determination)		
Signal Conditioners:			
EEG	0.1	0.13	1.1
EMG	0.1	0.13	1.1
Phonovibrocardiogram and Filter	0.1	0.25	2.0
Ballistocardiograph	0.5	0.5	5.5
Pulse Wave Velocity	0.1	0.25	2.0
Modified Orthorater	(Included in Required Class 1 Measurements)		
*Special Psychological Test Inst.	431	161	21.0 cu ft
*Psychomotor Performance Test Panel	300	55	2.0 cu ft
Bioanalytical Equipment	(Same as Required Class 1 Measurements Unit)		
Gas Chromatograph and Spare Columns	6.0	13.0	1.0 cu ft
Total Desired Class 2 Measurements	738	231	24.0 cu ft
ACCESSORY INSTRUMENTS AND PARTS:			
Signal/Simulator/Calibration Kit	2.0	2.0	100.0
Tape Scale		0.2	3.0
Camera (with mounting brackets)		1.5	64.0
Maintenance Kit		1.5	120.0
Spare Parts Kit		5.0	1000.0
Slide Rule Calculator		0.15	2.0
Waxed Back Tablet		0.2	3.0
Medical Log Book		0.4	6.0
Miscellaneous Medical Instruments		2.5	100.0
Equipment Cabinet		5.0	
Total Accessory Instruments	2.0	18.5	0.81 cu ft

* Estimates Based on "OFF-THE-SHELF-EQUIPMENT" and with suitable miniaturization considerable reductions possible.

6. Summary of Space Station Design Requirements

The duty cycles of the biomedical and human factors laboratory were estimated to be 55% of peak power for the belt pack telemetry monitoring system. This assumed continuous monitoring of four channels of information from each crew member as the maximum. This would require approximately 15 watts per man. The fixed site monitoring system would require approximately 25 watts, or a duty cycle of 30% of peak power. The experimental duty cycle maximums are estimated to be 20% of peak power drain. A summary of space station design requirements is presented in Table 56. It is anticipated that for the minimum feasible 6-man MORL Space Station (Section VII), there will be no difficulty in accommodating the design requirements for Mission Safety, Class 1 and Class 2 measurements. A Saturn 1B booster is preferred for this application. In the case of 12-man and 24-man stations, no difficulty in meeting design requirements is anticipated.

TABLE 56. SPACE STATION DESIGN REQUIREMENTS

	Power (Watts)	Weight (lbs)	Volume (cu. ft.)
Mission Safety Measurements			
Requirements/man (55% duty cycle)	13.4	12.1	0.15
Requirements/station (30% duty cycle)	25.1	117.7	5.2
Class 1 Measurements			
Requirements/station (20% duty cycle)	48.4	458.0	13.5
Class 2 Measurements			
Requirements/station (20% duty cycle)	147.0	231.0	24.0
Mission Safety and Class 1 Totals			
6 Man Station	154.0	648	19.6
12 Man Station	234.0	721	20.5
24 Man Station	395.0	864	22.3
Mission Safety, Class 1 and Class 2 Totals			
6 Man Station	301.0	879	43.6
12 Man Station	381.0	952	44.5
24 Man Station	542.0	1095	46.3

G. OPTIONAL FACILITIES

Certain facilities for the space station are optional. Their presence would increase the information content of the experimental program. However, they were not considered to be required or desired to meet the necessary objectives of the experimental program. These facilities are a diagnostic x-ray unit and an animal laboratory.

1. X-ray Facility

An onboard x-ray facility could be used for densitometry measurements of skeletal demineralization, chest films and abdominal films. Unless sensitive densitometry techniques are used, x-ray findings of skeletal demineralization are late in occurring relative to hypercalcuria. The densitometry measurements should be made pre- and post-flight, but no requirement exists for inflight determinations. Static chest films to delineate possible adaptive lung and cardiac pathology as atelectasis, pulmonary vascular changes, and cardiac contour changes are not required in flight. No significant safety monitoring value will accrue from their use. Changes will be small, with a gradual development over time. Interpretation will require either specially trained personnel (radiologists) onboard or the transmission of highly resolved x-ray images to the ground. A thorough pre- and post-flight roentgenographic workup is recommended. Onboard x-ray facilities would aid in the diagnosis of acute respiratory ailments as aspiration pneumonia, etc. However, methods of evaluation and following the course of such events can be provided by the physical examination and clinical laboratory studies. Gastrointestinal series and other radio opaque studies are not felt to be required as no pathology is anticipated.

Some significant data can be gained from x-ray cineradiographic techniques. Such a technique would be capable of visualizing the displacement of organs with different densities, the alterations in pattern of cardiac contraction, cardiac filling, cardiac runoff, and arterial and venous flow patterns. This would require the use of intravenous and indwelling catheter injection of radio opaque substances. As discussed earlier, this is not recommended. However, the presence of an animal laboratory would make these techniques available.

An x-ray facility with fluoroscopic and cineradiographic capability is presented as optional for a large space station.

a. Field X-Ray Unit

A simple lightweight field x-ray unit, such as that produced by Bracke-Seib Co., Inc., New Rochelle, New York, uses a 400 cycle, 120 kilovolt, 1.5 milliamperes design x-ray tube-transformer unit requiring 230 watts of power. A timer (1.4 to 12 sec.) would be the sole control. The x-ray head has 6 inch diameter and is 19 inches long and weighs 19.5 lbs. The timer would be 7-1/2 inches long by 3 inches wide by 2 inches deep and would weigh 2 pounds. No effort is underway to qualify the unit for spacecraft applications; however, it is felt that such rating is possible.

Usual portable equipment ratings are 15 ma at 80 to 85 kv requiring 1500 watts of power which is prohibitive for small space stations. Since film density doubles for voltage increases of 10 kv, the increase to 120 kv (with 1.5 milliamps) requires only 230 watts.

b. Radioisotope Sources

Two possible types of radioisotope X-ray sources are:

(a) Beta excited target sources

(b) Characteristic X-ray sources

In type (a) Beta particles from radioisotopes give rise to x-rays upon striking a target just as in an X-ray tube. A Strontium 90-Yttrium 90 source with an effective half-life of 20 years was investigated. Such an x-ray with a source strength of 3×10^5 curies would generate about five kilowatts, with corresponding cooling requirements for the container. An aluminum-lined lead shield weighing about 40 pounds is required. To use the source, shielding is removed from one side of the unit and a thin lead target introduced to generate the necessary radiation.

In type (b), an x-ray is generated by a radioisotope when an electron fills an orbital electron-vacancy. No target is necessary with this type of source. Satisfactory human hand x-ray pictures have been obtained with Iodine

125 and Thulium 170. The latter has a 129 day half-life. A 200 mg Thulium sample after three months irradiation in a Materials Testing Reactor is adequate for hand and foot x-rays at four seconds exposure. Shielding would consist of about 16 pounds of lead.

It is felt that the portable hot cathode x-ray unit is superior to the radioisotope source units for space station applications.

The x-ray dynamic image recorder would consist of the following combinations:

1) A fluoroscopic screen with monitoring phototronics or Traid TKD-7 16 mm movie cameras, and a 400 foot film magazine at 60 fps would provide 30 eight second exposures.
2) A fluoroscopic screen with monitoring vidicon tube, the output being displayed on the console TV monitor or transmitted to ground.
3) A fluoroscopic screen and 5-inch Philips x-ray Image Intensifier tube monitored by either the vidicon tube or movie camera.

Estimated specifications of the above systems with the x-ray source are:

	Volume	Weight	Power
With image intensifier:	2 cu ft	50 lbs	175 watts
Without image intensifier:	1.75 cu ft	40 lbs	275 watts

2. Animal Laboratory

The use of animals in the space station for biomedical experimentation is optional. Details of such experiments have been discussed in the Experimental Program Section. It is unlikely that animal facilities will be available on any but the large MOSS space stations.

There are two basic approaches to the confinement of animals in space stations which appear feasible:

1) Caging the animals while supplying a separate environmental control and waste disposal system.

2) Restraining the animals in a cockpit (pillory-like) while in the general cabin area but with a permanent diaper and a suction source to capture waste.

Dispensing arrangements for food and water do not appear to be difficult to devise in either case.

The first principle can be applied most conveniently with a series of cages in which the animals (such as Hamsters) float weightless or grasp the side of the cage. Cleanliness of the cage is maintained by an "air curtain" principle whereby a current of air is blown along the sides of the cage to trap waste in a foam pad at the aft end of the cage. A drawer technique is used for access to the individual cages. In the case of radiation experiments with Hamsters, shielding would be required around the sides of the individual cages. The anticipated skin exposure at orbital altitude versus shielding density is given below:

Dose Rate (rad/Day)	Average Shield Density(lb/ft^2)
0.01	35.0
0.1	11.0
1.0	8.5
10.0	5.0
150.0	3 (basic aluminum wall)

These values are based on current estimates of the decay in the artificial radiation belt made by the Starfish explosion. It is anticipated that these results will be representative of the fluxes to be encountered in the near future. However, dose rates are likely to decrease by the date of the space station orbit.

Consumables for the hamsters are given at 10 grams food per day per animal and 12 gm water per day per animal. Volume requirements per cage of four hamsters is 6 inch diameter and 10 inch length. Weight for a system of 6 cages with atmosphere control is expected to be 40 lbs.

The alternative technique of restraining animals has been fairly successful in earth-based testing with small monkeys. This method offers better access to the animal and less complication in life support of the animal.

Space station payload penalties in terms of consumables of the animals are not insignificant when four small monkeys (Rhesus Macaque) of approximately 4 kg each are considered over a period of say three months or six months. Rhesus monkeys are desirable experimental animals from the standpoint of ease of internal instrumentation and surgical procedures in comparison to spider and squirrel monkeys.

Assuming food: 120 gms/day/animal

Water: 250 gms. day/animal, are the requirements, a figure of close to 250 lbs of consumables is obtained for the limiting case of four monkeys for six months duration considering some water recovery.

Each cockpit plus monkey takes up a volume of 5.6 cu ft (1.5 x 1.5 x 2.5 ft dimensions). The weight penalty per cockpit is expected to be 10 lbs. Spider monkeys are smaller and considerably more docile than the Rhesus. They take up approximately one-half the food,weight and volume requirements, and are therefore worth considering for the mission.

For surgical experimentation with the monkeys, the following facilities are estimated:

Operating table (15 x 30 x 2 inches) with restraining means.

Suction source for drainage of the table.

Access to both sides of the table with working space for two investigators. Gross volume of 250 cu ft is estimated.

Equipment needed in the area are:

- Suction pump
- Electro coagulator
- Defibrillator
- Autoclave
- Storage for instruments (2 cu ft)

SECTION VII

TRADE-OFF ANALYSIS

From an engineering point of view, the weight, power and volume of planned space stations and logistic support, as indicated by shuttle vehicles and planned intervals of resupply, are the determining limits within which the biomedical and human factor study program must be developed. It is required, therefore, that the weight, power and volume of projected experimental plans be compared with the engineering estimates applicable to such plans. From the comparisons, information can be developed leading to definition of the disparities, if any exist, between engineering constraints and biomedical and psychological measurement program characteristics.

A comparison was made for vehicles of 2, 3, 4, 6, 12 and 24 man carrying capacity. It appears from the data that the projected experimental plans (mission safety, Class 1 and 2 measurements) can be implemented in all vehicles except the small 4-man MORL and the smaller 6-man MORL'S. These vehicles are considered to be inadequate for volume requirements of the mission. There also appears to be a volume restriction in the minimum modification extended Apollo and some solution will be required to provide the essential volume for a 100 day mission as well as the additional 16 cu ft capacity for (mission safety and Class 1) instrumentation.

When an internal centrifuge is desired, the 3,000 cu ft laboratory MORL-type is the minimum vehicle recommended for such an installation.

The zero g module aboard the Hexagonal Torus, a rotating configuration, appears too small to accommodate the desired number of crew members and a centrifuge. The structural dynamics of an internal centrifuge within the Torus and other large rotating configurations indicate the possible occurrence of a resonance con-

dition at the g levels of interest for re-entry simulation, unless the stiffness of the centrifuge structure is increased sufficiently to shift the resonance condition to a higher simulated gravity level.

The maximum space station g simulation level will be affected by the maximum RPM that the subjects can tolerate. On the basis of ground experimentation with relatively short radius centrifuges, 30 rpm is considered the reasonable limit of rotation. This would provide 1-1/2 g as a maximum in the small (154 inch diameter) space station and 2-1/2 g (which simulates earth-orbit re-entry profiles of the Gemini and Apollo vehicles at a lift/drag ratio of 0.5 and re-entry angle of 2 degrees) in the larger (220 inch diameter) space station.

The major variables to be considered in trade-off analyses, constrained by the requirement for a high level of confidence in the "g" decision for interplanetary flight, are:

1) Duration of space station flights
2) Type of artificial g simulation
3) Size of sample

Weight, volume and power requirements of the biomedical and human factors measurements appear to be of secondary importance except for the very small space station configurations. The assumption is made that for the purpose of the present biomedical research program, the power, weight, and volume requirements for other experimentation on board the space station are accommodated separately. General trade-off problems do arise, primarily with respect to selection of equipment and facilities (e.g., centrifuge, animal facilities).

The major possibilities resulting from man's exposure to prolonged weightlessness:

1) Man adapts to weightlessness without artificial g conditioning
2) Man adapts to weightlessness but cannot perform during re-entry or after landing without artificial g conditioning (periodic or continuous) prior to re-entry

3) Man adapts to weightlessness with periodic artificial g conditioning (centrifugation)

4) Man cannot adapt to weightlessness and requires continuous artificial g conditioning (rotation).

The orbiting experimental space station would not require g simulation capability if future experience demonstrates that man can adapt to weightlessness with minor reversible alterations that do not affect re-entry or post-landing performance. Conversely, man may adapt to weightlessness slowly with more marked alterations that may plateau at a steady state, or continue almost imperceptibly to irreversible damage. Should some degree of reversible deterioration occur, the demonstration of adequate re-entry and post-landing performance at periodic intervals, with a sufficient number of cases, would permit a safe extension of weightlessness experimentation. Because of its implications for space station design, man should be exposed to weightlessness without artificial g conditioning for as long a period as is reasonably safe. Periodic re-entry and post-landing experience with sufficient cases will prevent an unwarranted and premature initiation of artificial g conditioning.

If man can perform during weightlessness, but his performance is significantly impaired during re-entry and post-landing, then artificial g conditioning prior to re-entry will need to be instituted. This will require the determination of the type, level, duration and adequacy of g simulation. If centrifugation were found adequate to counteract degradation in performance but repeated administration for many days were required, it might be more feasible to maintain conditioning by periodic centrifugation throughout the period of interplanetary travel. Conversely, if centrifugation were not adequate, another alternative might be to condition the crew for a few days on a rotating station prior to re-entry. Interplanetary vehicles could rendezvous with an earth orbiting rotating station to transfer their crews for conditioning prior to return to earth. Using this procedure, g simulation facilities would only be required for earth orbiting space stations and

not for interplanetary vehicles.

If man cannot adapt to weightlessness without administration of intermittent g force, then interplanetary vehicles would require a g simulation facility. To accomplish this purpose, an internal centrifuge could be included. It would impose relatively few engineering design constraints on an interplanetary vehicle. However, the frequency, duration, level, physiological limitations, and effectiveness of short radius centrifugation would need to be determined. If frequent, long, and high g levels were required, the operational feasibility would be severely limited. In addition, physiological limits of the short radius centrifuges might necessitate large external centrifuges approaching the configuration of a rotating station.

If centrifugation proves to be ineffective because of operational or physiological limitations, then, rotating space stations will be needed to provide continuous artificial g. Performance proficiency may be enhanced in a rotating station if Coriolis forces and Coriolis effects can be controlled. A rotating interplanetary vehicle, however, would impose severe engineering design constraints in view of present and anticipated future state of the art concepts of space vehicles.

The required length of space flight experience necessary to yield a high level of confidence in decisions affecting the design of interplanetary vehicles is important, particularly in relationship to the possible usefulness of contemplated 90 - 120 day extended Apollo flights. If future 30 day Apollo experience does not demonstrate any significant deterioration, it would be poor judgment to extrapolate beyond actual flight duration experience in making design decisions. It is not considered safe to plan an initial one year continuous exposure of astronauts in an orbiting experimental station. Exposure increments of 1, 2, 3, 6, and 12 months are proposed in the experimental programs. In view of the 1 to 2 year flight time for a manned Mars mission, an experimental space station capable of supplying a minimum of 1 year of space experience is required to provide a sufficiently high level of confidence in the "g" decision.

Individual differences and susceptibilities are well known, even within a selected astronaut population. Hence, experimental space flight data on a group of astronauts (6 minimum), will be required to obtain a high level of confidence that observed performances are not random manifestations rather than systematic differences.

The information content and confidence level of mission measurement programs depend mainly on the crew size, orbital lifetime and artificial g simulation facilities of the space station. While a rotating space station with large zero g hub containing a centrifuge is capable of comprehensively investigating all aspects of the "g" decision, it may be expedient to study weightlessness in non-rotating space stations. The development of a non-rotating space station with internal centrifuge should be predicated on the establishment of physiological tolerances to short radii centrifugation with earth based studies. An early verification under space conditions of the earth based centrifugation data could be obtained with the extended Apollo mission. A space station having only centrifugation and zero g capability could provide information on several aspects of the "g" decision, namely: whether man can adapt to weightlessness, whether he can perform during re-entry or after landing, and whether centrifugation permits adaptation. If the results of these limited experiments prove to be negative so that an interplanetary vehicle will require continuous artificial g, further manned space station experiments might be performed on a preliminary version or prototype of such a rotating interplanetary vehicle.

Regardless of the configuration of possible experimental space stations, it is important to establish first that man cannot adapt to weightlessness before g simulation procedures are instituted. A comprehensive experimental measurement program, a sufficient number of exposed astronauts, and frequent periodic re-entry and post-landing experience may minimize the design requirements for interplanetary vehicles.

Although the weight, volume, and power requirements of the biomedical and human factors measurements are small in relation to the capacity of the larger stations, additional experiments in other sciences could be required aboard these

stations and, thus, a reduction in the number of measurements, size of crew or orbital lifetime might be required. To evaluate the effect of alterations in the measurement program on the confidence of the experimental data, the significant factors have been arbitrarily quantified for comparative purposes.

Successful implementation of the proposed measurement program which incorporates safety, Class 1 and Class 2 measurements in the absence of significant deterioration is assumed to provide a confidence level of 95% in ensuring mission safety and establishing man's ability to perform during protracted space missions. Because the effects of prolonged exposure to the space environment are unknown, it is not considered practical to specify confidence values for individual measurements. Proportionately, on the basis of 100, the safety measurements equal 50, the Class 1 measurements equal 35, and the Class 2 measurements equal 15.

Reduction in the size of sample and/or duration of exposure to the space environment affect the confidence level of the measurement program. Given:

1) An observed difference between base-line data and data collected in space

2) Standard deviations for the measurements equal to the observed difference

3) Number of cases varying from 1 to 6

The computation of the standard t for 6 subjects would show an approximate t = 5. If this number for t is considered 100%, the t percentage for the lower number of cases are shown.

n = 6	t = 5 = 100%
n = 5	t = 4 = 80%
n = 4	t = 3 = 60%
n = 3	t = 2 = 40%
n = 2	t = 1-2/3 = 30%
n = 1	t = 1/2 = 5%

Crew rotations in the experimental programs are based on the concept that experience for a given duration will permit an extension to the next duration interval of the series. For the series 1, 2, 3, 6, and 12 months, a generalized curve typical of the progress of learning to an acceptable criterion of success may be coupled to this extension of time, since experience is inherent in the plan. Then this concept may be used to express the relationship of experience or learning with time and confidence in the prediction of the outcome of similar flights. Figure A-30 shows such a relationship of duration to confidence. The related points on the curve are:

Duration:	1	2	3	6	12
Confidence:	10%	20%	35%	75%	100%

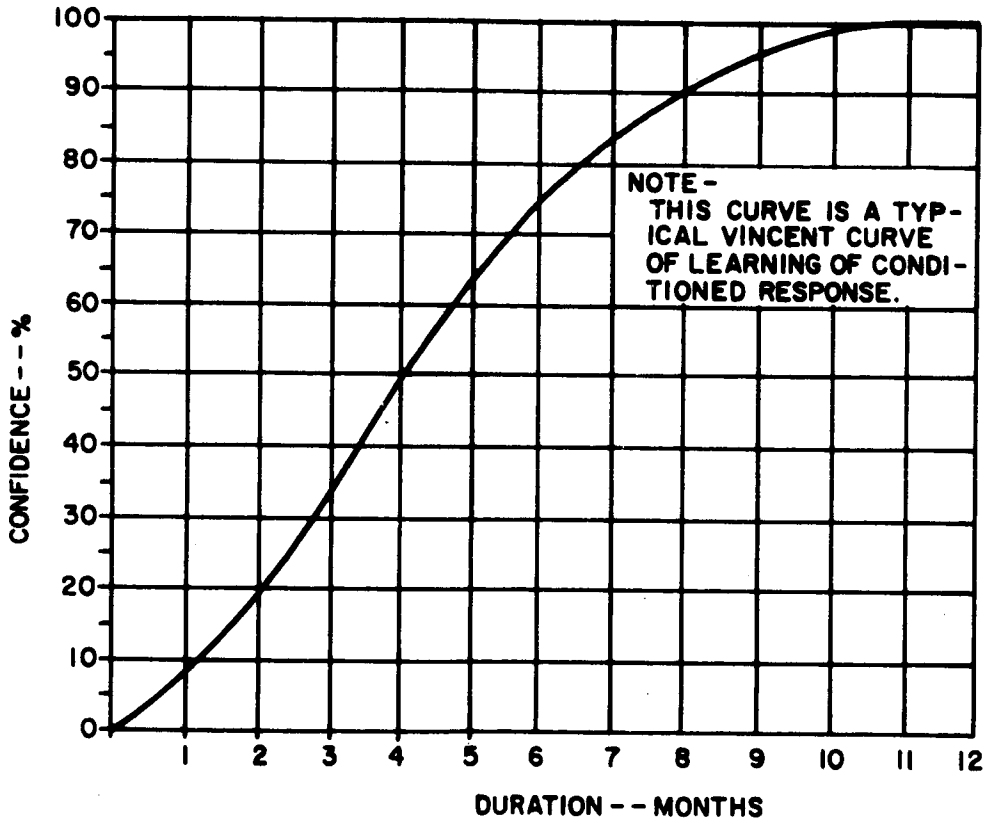

Figure 45. Relationship of Confidence to Duration (Months)

The qualifications of the crew will affect every aspect of the data collection. The value of a physician crew member cannot be overemphasized. His experience and judgment in analyzing and re-directing experimentations based on day to day results is invaluable. Given the required facilities and space experience, the relative merit of experimental measurement programs may depend more on the qualifications and experience of the physician crew members than the specific space station configuration.

Animal facilities onboard an experimental space station would allow for a more thorough investigation of the effects of the space environment. However, unless weightlessness produced marked and rapid deterioration of human performance, animal experimentation will probably not be required for the "g" decision. Should marked changes occur, animals would be helpful in evaluating the therapeutic benefits from corrective procedures.

Based on the above considerations, the minimum design requirements for orbiting space stations to resolve, with a high level of confidence, the four major possibilities resulting from man's exposure to weightlessness are:

1) Man adapts to weightlessness without artificial g conditioning

   Type of station: Cylindrical MORL
   Crew size: 6
   Booster type: Saturn 1B
   Required orbit duration, months: 24 (or two 1-year stations)
   Minimum pressurized cabin volume, cu ft: 2400
   Crew transfer vehicle: 3-Man Apollo
   Transfer times, months after start: 1, 2, 3, 5, 6, 11, 12, 24
   Other resupplies required: None.

2) Man adapts to weightlessness but cannot perform during re-entry or after landing without artificial g conditioning (periodic) prior to re-entry or man adapts to weightlessness with periodic artificial g condition (centrifugation).

Type of station:	Large MORL	Large Zero G
Crew size:	6	12
Booster type:	Saturn 1B	Saturn 5
Required orbit duration, months:	24 (or two 1-year stations)	16
Minimum pressure cabin volume, cu ft:	3,500	7,000
Minimum cabin diameter, inches:	220	260
Internal centrifuge, tentative RPM limit:	30	30
Crew transfer vehicle	3-Man Apollo	6-Man Apollo
Transfer vehicle booster:	Saturn 1	Saturn 1B
Transfer times, months after start:	1,2,3,5,6,11,12,24	1,2,4,8,16
Other resupplies required:	None	None

3) Man adapts to weightlessness but cannot perform during re-entry or after landing without artificial g conditioning (continuous) prior to re-entry.

Type of station:	Small Y	Radial Module, Y, or Torus
Crew Size:	6	12
Booster type:	Saturn 1B	Saturn 5
Required orbit duration, Months:	24 (or two 1-year stations)	16
Minimum radius arm of rotating modules, ft:	40	50
Maximum Angular Velocity, RPM: (assuming crew adaptation to 6 RPM)	6	6
Minimum pressurized cabin volume in all rotating modules, cu ft:	1,500	3,000

Minimum pressurized zero g hub volume, cu ft:	2,000	6,000
Transfer vehicle booster:	Saturn 1	(2 Saturn 1) + (2 Saturn 1B)
Transfer times, months after start:	1,2,3,5,6 11,12,24	1,2,4,8,16
Other resupplies	None	None

4) Man cannot adapt to weightlessness and requires continuous artificial g conditioning (rotation).

Type of station:	Radial Module Y, or Torus	Radial Module Y, or Torus
Crew size:	12	24
Booster type:	Saturn 5	Saturn 5
Required orbit duration, months:	24	16
Minimum radius arm of rotating modules, ft:	50	50
Maximum angular velocity, RPM: (assuming crew adaptation to 6 RPM)	6	6
Minimum pressurized cabin volume in all rotating modules, cu ft:	3,000	6,000
Minimum pressurized zero g hub volume, cu ft:	7,000	10,000
Minimum diameter of zero g hub, inches:	260	260
Internal centrifuge, tentative RPM limit:	30	30
Crew transfer vehicle:	6 man Apollo	12 man Ballistic
Transfer vehicle booster:	(4 Saturn 1) + (3 Saturn 1B)	Saturn 1B
Transfer times, months after start:	1,2,3,5,6, 11,12,24	1,2,4,8,16
Other resupplies:	None	None

SECTION VIII

RECOMMENDATIONS

To establish man's ability to perform during protracted space missions and to make the "g decision" it is recommended that:

1) The space station's experimental measurement program include, as a minimum, safety and Class 1 measurements

2) Each aspect of the "g decision" be based on the effects of weightlessness for identical durations on a minimum of six men

3) The experimental program provide for successive 1, 2, 3, 6, and 12 months intervals of space environment experience

4) A physician be a crew member on the experimental space station

5) Extensive ground based studies be conducted to provide adequate baseline data for space station experiments and to evaluate the effects of other variables (e.g., cabin atmosphere, contaminants, circadian rhythms, small radii centrifugation, radiation)

6) Studies be conducted to develop standardized psychological tests designed for use in experimental space stations

7) The variables in the investigation of the effects of weightlessness be reduced by providing a two gas cabin atmosphere approaching a sea level pressure and by maintaining a normal work, rest, and sleep cycle in the experimental space station

8) The design requirements for the minimum experimental space station include the capability for centrifugation, safety and Class 1 measurement, and one year continuous occupancy by six men

9) The design of non-rotating experimental space stations include the capability of centrifugation

10) The design of rotating experimental space stations include a centrifuge in a zero g hub so that all aspects of the g decision could be studied with a single space station configuration

REFERENCES

1. WADD Technical Report 60-886, "Study of Structural Requirements of Re-Entry From Outer Space," May 1961.

2. Weber, W. R., "Effective Cutoff Rigidities for Solar Cosmic Rays in the Earth's Field," 44th Annual Meeting, American Geophysical Union, Washington, D.C., April 17, 1963.

3. Madey, R., "Shielding Against Space Radiation," Nucleonics, 21, (5), May, 1963.

4. Curtis, H.J., "Some Specific Considerations of the Potential Hazard of Heavy Primary Cosmic Rays," "Proceedings of the Symposium on Protection Against Radiation Hazards in Space", (ORNL 1963).

5. Brown, W. L. and J. B. Gabbe, "The Electron Distribution in the Earth's Radiation Belts During July 1962 as Measured by Telstar," J. Geophys. Res., 68, (3), February 1, 1963.

6. Hess, W. N., "The Artificial Radiation Belt Made on July 9, 1962," J. Geophys. Res., 68 (3), February 1, 1963.

7. Dingshofen: Das Wasserbad als Teilsimulator der Gewichtslosigkeit, Arch. Physik. Ther., 14, 307, 1962.

8. Graveline, D.E., and McCalley, M., "Body Fluid Distribution Implications For Zero Gravity," Aero. Med., 33, 1281, 1962.

9. Graveline, D.E., et al, "Psychobiologic Effects of Water Immersion," Aero. Med., 32, 387, 1961.

10. McKinzie, R.E., B. Hartman and D.E. Graveline, "Sleep Characteristics in Hypodynamic Environment," USAF, SAM #60-68, 1960.

11. Gerathewohl, S.J., et al., "Sensorimotor Performance During Weightlessness," J. Aviat. Med., 28, 7, 1957.

12. Hammer, L.R., "Reception of the Visual Vertical Under Reduced Gravity," N62-16329, MRL-TDR-62-55.

13. Rees, D.W., and N.K. Copeland, "Discrimination of Differences in Mass of Weightless Objects," WADD-TR-60-601, December, 1960.

14. Fourth Manned Orbital Flight, NASA-SP-45, Oct. 1963.

15. Simons, J.C., and M.S. Gardner, "Weightlessness: A Summary of Sensations and Performance While Free-Floating," AMRL-TDR-62-114, March 1963.

16 Gazenko, O.G., "Medical Problems of Manned Space Flight," Space Science Rev., 1, 3, 369, 1963.

17 Graybiel, A., and B. Clark, "Symptoms Resulting from Prolonged Immersion in Water," Aero. Med., 32, 181, 1961.

18 Bornschein, H., "Coriolis Effect," Aero. Med., 34, 274, 1963.

19 King, B.G., "Physiological Effects of Postural Disorientation by Tilting During Weightlessness," Aero. Med., 32, 137, 1961.

20 SAM-TDR-62-122, "The Response of the Otolith Organ to Tilt."

21 Shock, G.J.D., "Perception of Horizontal and Vertical in Simulated Subgravity Conditions,"Armed Forces M.J., 11, 786, 1960.

22 Second U.S.Manned Orbital Flight, NASA, SP-6, 10-24-1962.

23 Third U. S. Manned Orbital Flight, NASP-6, May 24, 1962.

24 Siskayan, N.M., and V.I.Yazdovsky, "Problems of Space Biology," U.S.Department of Commerce, Office of Technical Serv., OTS-63-21437.

25 Spencer, W.A., "Medical Application of Computers," Brookhaven Seminar 9-10-1963.

26 Deitrick, J.E., et al., "Effects of Immobilization Upon Various Metabolic and Physiological Functions of Normal Man," Am. J. Med., 4, 3, 1948.

27 Taylor, H.L., et al., "Effects of Bed Rest on Cardiovascular Function and Work Performance," J. Appl. Physiol., 2, 223, 1949.

28 Tepper, R.H., and F.A.Hellebrandt, "The Influence of the Upright Posture on the Metabolic Rate," Am.J.Physiol., 122, 563, 1938.

29 Beckman, E.L., et al, "Physiological Changes Due to Immersion in Water Up to Neck Level," Aero. Med., 32, 1031, 1961.

30 Burch, G.K., and S.J.Geratewohl, "Observations on H.R. and Cardiodynamics During Weightlessness," Aero. Med., 31, 661, 1960.

31 Graveline, D.E., and M.M.Jackson, "Diuresis Associated With Prolonged Water Immersion," J.Appl.Physiol., 17, (3), 519, 1962.

32 Birkhead, N.C., et al, "Circulatory and Metabolic Effect of Prolonged Bed Rest," Fed. Meetings, 1963, Atlantic City.

33 Taylor, H.L., et al., "The Effect of Bed Rest on Blood Volume," Am. J. Physiol., 144, 227, 1945.

34 Bayevsky, R.M., and Gazenko, O.G., "Problems of Physiology of Circulation During Weightlessness," I.A.F. Congress, Paris, 1963.

35 Yuganov, Y.M., "Problems of Space Biology II," (27-3-63), OTS:63-21437.

36 Soviet Program in Space, Bioastron. Rep., 1, 9, 1962.

37 Mellebrowicz, H., and L. Galle, "Cardiac and Pulmonary Functions During Work While Standing, Sitting, and Lying Down," Sportarzt 13(11): 359, 1962.

38 Whedon, G.D., "Bone As a Tissue," McGraw Hill, New York 1960.

39 Pollack, A.A., and E.A.Wood, J.Appl.Physiol., 1:649, 1949.

40 Smith, C.A., et al., "Bladder Distention Causing Iliac-Vein Obstruction," New Engl. J. Med., 268 (23):1261, 1963.

41 Birkhead, N.C., "Effects of Supine and Sitting Exercise on Circulatory and Metabolic Alterations in Prolonged Bed Rest," Physiologist, 6, (3), 140, 1963.

42 Amory, H.I., and J. B. Brick, "Irradiation Damage of the Intestines Following 1,000 kv Roentgen Therapy, Evaluation of Tolerance Dose," Radiology, 56, 49, 1951.

43 Brown, J.H.U. (Ed.), "Physiology of Man in Space," Academic Press, New York and London, 1963.

44 Slager, Ursula T., "Space Medicine," Prentice-Hall, Inc., Englewood Cliffs, New Jersey, 1962.

45 Miller, H., Riley, M.B., Bondurant, S., and E.P.Hiatt, "The Duration of Tolerance to Positive Acceleration," J.Aviat. Med., 30, 360-366, 1959.

46 Simons, John C., "Walking Under Zero-Gravity Conditions," WADC Technical Note 59-327, October 1959.

47 Aschoff, J., "Exogenous and Endogenous Components in Circadian Rhythms," in Cold Spring Harbor Symposia on Quantitative Biology, Vol. XXV, "Biological Clocks", The Biological Laboratory, Cold Spring Harbor, New York, 1960.

48 Simons, John O., and Melvin S. Gardner, "Weightless Man: A Survey of Sensations and Performance While Free-Floating," AMRL-TDR-62-114, March 1963.

49 Bondurant, S., "Effect of Acceleration on Pulmonary Compliance," Fed. Proc., 17 (Supplement 2), 18, 1958.

50 Meehan, J.P., and H.I. Jacobs, "Relation of Several Physiological Parameters to Positive G Tolerance," WADC-Tech. Rept. 58-665, USAF, Wright-Patterson AFB, Ohio, 1959.

51 Schaefer, V.H., et al., U.S.AMRL, Report No. 389, Fort Knox, Kentucky, 12 June 1959.

52 Goldman, D.E., and H. E. Von Gierke, "The Effects of Shock and Vibration on Man," Naval Medical Research Institute, Lecture and Review Series, No. 60-3, 8 January 1960.

53 Goldman, E.E., Am.J.Physiol., 155, 78, 1948.

54 Roman, J., "Effects of Severe Whole Body Vibration on Mice and Methods of Protection from Vibration Injury," Wright Air Development Center Technical Report 58-107, April, 1958.

55 Taylor, E.R., "Biodynamics: Past, Present and Future," 6571st Aeromedical Research Laboratory, TDR-63-10, Holloman AFB, New Mexico, March 1963.

56 Taylor, E.R., L.W.Rhein, and G.R.Beers, "Effect of Atropine Upon the Relative Bradycardia Associated with Impact," Aeromedical Research Laboratory, TDR-62-13, Holloman AFB, New Mexico, August 1962.

57 Rhein, L.W. and E.R.Taylor, "Increased Skeletal Muscle Activity Following Impact," Aeromedical Research Laboratory, TDR-62-26, Holloman AFB, New Mexico, December, 1962.

58 Taylor, E.R., L.W.Rhein, and J.F.Ferguson,III, "The Effect of Impact Upon the Petellar and Other Deep Tendon Reflexes," Aeromedical Research Laboratory, TDR-62-18, Holloman AFB, New Mexico, August 1962.

59 Taylor, E.R., "Thrombocytopenia Following Abrupt Acceleration," Aeromedical Research Laboratory, TDR-62-30, Holloman AFB, New Mexico, December 1962.

60 German Aviation Medicine, World War II, Vol. 2, Chapter VII, "Noise and Vibration," Department of the Air Force, U.S.Government Printing Office, Washington, D.C.

61 Armstrong, H.G., "Principles and Practice of Aviation Medicine," Third Edition, The Williams & Wilkins Company, Baltimore, 1952.

62 Jacobs, H.I., "Review of Available Information on the Acoustical and Vibrational Aspects of Manned Space Flight," Aerospace Med., 31, 468-477, 1960.

63 Chapanis, A., W. R. Gainer, and C. T. Morgan, Applied Experimental Psychology, Wiley, New York, 1949.

64 Boeing, Wichita, "Human Capabilities in a Vibration Environment," Tech. Rep. D3-3512-1,2,3, 1961.

65 Warren, S., "Blood Findings in Cyclotron Workers," Radiobiology, 39, 194-199, 1942.

66 Lawrence, J.S., and W.N.Valentine, "The Rate of Utilization of Cross-Circulated Platelets in the Thrombopenic Cat," U.S.Atomic Energy Commission, MDDC-217, 1947.

67 Newman, W.F., "Calcium Metabolism Under Conditions of Weightlessness," COSPAR, Int. Symp., Warsaw, June 1963.

68 Adams, W. S., R. H. Saunders, and J. S. Lawrence, "Output of Lymphocytes in Cats," Am. J. Physiol., 144, 297, 1945.

69 Lawrence, J.S., D.M. Ervin, and R.M. Wetrich, "Life Cycle of White Blood Cells; Rate of Dissappearance of Leukocytes From Peripheral Blood of Leukopenic Cats." Am. J. Physiol., 144, 284, 1945.

70 Harris, J.W., "The Red Cell," Harvard University Press, Cambridge, 1963.

71 Shreck, R., "Radiosensitivity of Lymphocytes and Granulocytes in vitro According to Method of Unstained Cell Counts," Proc.Soc.Exper. Biol. & Med., 58, 285-286, 1945.

72 Langham, W.H., "Some Radiobiological Aspects of Early Manned Space Flight," I.A.F. Congress, Paris, Sept. 1963.

73 Lorenz, E., et al., "Plutonium Project; Biological Studies in Tolerance Range," Radiology, 49, 274-285, 1947.

74 Committee on Pathological Effects of Atomic Radiation: Long-Term Effects of Ionizing Radiations from External Sources, Publication 849, National Academy of Sciences, National Research Council, Washington, D.C., 1961.

75 Ellinger, F., Medical Radiation Biology, Charles C. Thomas, Springfield, Illinois, 1957.

76 Russel, W.R., Intern. Congr. of Genetics, The Hague, Sept. 1963.

77 Lorenz, E., "Effects of Long-Continued Total-Body Gamma Irradiation on Mice, Guinea Pigs, and Rabbits, VI. Conclusions and Applicability of Results to the Problem of Human Protection," in Zirkle, R.E. (Ed.), Biological Effects of External X and Gamma Radiation, McGraw-Hill, New York 1954.

78 Saksonov, P.P., et al., "On the Biological Effect of High Energy Protons," I.A.F. Congress, Paris 1963.

79 Helvey, W.M., et al., "Effect of Prolonged Exposure to Pure Oxygen on Human Performance," NASr-92, Nov. 1962.

80 Mullinax, P.F., and D.E. Beischer, "Oxygen Toxicity," J.Aviat.Med., 19:660, 1958.

81 Roth, E.M., "Oxygen Toxicity," NASA-TN-D-2008, Aug. 1963.

82 McFarland, Ross A., "Human Factors in Air Transportation," McGraw-Hill, New York, 1953.

83 Kleitman, N., "Sleep and Wakefulness: As Alternating Phases in the Cycle of Existence," University of Chicago Press, Chicago, 1939.

84 Kleitman, N., "Biological Rhythms and Cycles," Physiol.Rev., 29, (1), 1-30, 1949.

85 Kleitman, N. and A. Ramsarcop, "Periodicity in Body Temperature and Heart Rate," Endocrinology, 43, (1), 1-20, 1948.

86 Brooks, H. and Carrol, J.H., "A Clinical Study of the Effects of Sleep and Rest on Blood Pressure," Arch.Int.Med., 10, 97-102, 1912.

87 Hamilton, L.D., C.J. Gubler, G.E. Cartwright and M.M. Wintrobe, "Diurnal Variation in the Plasma Iron Level of Man," Proc.Soc.Exp.Biol. & Med., 75, 65-68, 1950

88 Campbell, J.A. and T.A. Webster, "Urinary Tides and Excretory Rhythms," Biochem.J., 16, 507-513, 1922.

89 Kleitman, N., "Studies on the Physiology of Sleep," I. The Effects of Prolonged Sleeplessness on Man," Am.J.Physiol., 66, 67-92, 1923.

90 Simpson, G.E., "Diurnal Variations in the Rate of Urine Secretion For Two Hour Intervals: Some Associated Factors," J.Biol.Chem., 59, 107-122, 1924.

91 Campbell, J.A. and T.A.Webster, "Day and Night Urine During Complete Rest, Laboratory Routine, Light Muscular Work, and Oxygen Administration," Biochem.J., 15, 660-664, 1921.

92. Cohen, I. and E.C.Dodds, "Twenty-Four Hour Observations on the Metabolism of Normal and Starving Subjects," J.Physiol., 59, 259-270, 1924.

93 Pressman, G.L., and Newgard, P.M., "A Transducer for the Continuous External Measurement of Arterial Blood Pressure," SRI Project Report No. 3604, 1961.

94 Corbin, T., "Study Program for the Development of a Blood Pressure Measuring and Monitoring System for Remote Use on Man in Flight," NASA Report 35, 1962.

95 Wood, E.H., et al., "Measurement of Blood Content and Arterial Pressure in the Human Ear," Proceedings of the Staff Meetings of the Mayo Clinic, July 5, 1950.

96 Sullivan, G., Weltman, G., Bredon, D., Ettelson, B., "Theoretical Presentation of a Design for an Optimized Cardiovascular Performance Monitoring System," Spacelabs Report SR61-1042, 1961.

97 Salisbury, P.F., and Wichmann, T., "A New Method for the Indirect Measurement of Blood Pressure," ISA Conference Proceedings, Los Angeles, 1961.

98 Gorman, H.A., Grau, R., Craig, J., and LaRue, F., "The Development of an Implantable, Non-Occlusive, Non-Invasive Blood Pressure Measuring System," AIAA Report No. 63-167, June, 1963.

99 Senay, L.C., Christenson, M.L., and Hertzmann, A.B., "Finger and Forearm Cutaneous Blood Flows During Changing Ambient Temperature," WADD TR 60-15, 1960.

100 Ralston, H.J., Inman, V.T., Strait, L.A., and Shaffrath, M.D., "Mechanics of Human Isolated Voluntary Muscles," Am. J. Physiol., 151:612, 1947.

101 Cantarow, A., and Trumper, M., "Clinical Biochemistry," Pg. 180-181, W.B. Saunders Co., Philadelphia, 1962.

102 Bayevsky, R.M., and Gazenko, O.G., "A Few Problems of Physiology of Circulation During Weightlessness," Presented at IAF Conference, Paris, France, September 1963.

103 Geddes, L., "Respiratory-Metabolic Studies in the Space Program."

104 Donner, W., "Methods of Instrumental Analysis."

105 Watanabe, H., and Blondfield, E.F., "Performance Characteristics of Oxygen Sensors for Respiratory Oxygen Measurements in Aero-Space Applications," 16th ISA Instrument-Automation Conference Preprint 75-LA-61, 1961.

106 Donner, W., "Instrumentation for Closed Atmosphere Measurement and Control."

107 Levine, R., Personal Communication.

108 "Alcohol for the Determination of Total Body Water in Man," European Scientific Notes, No. 17-2, 20 February 1963, Office of Naval Research, London, England.

109 Eddelman, E.E., Cardiovascular Dynamics-Technic for Indirect Measurements in Clinical Cardiopulmonary Physiology, Greene and Shattow, New York, 1960.

110 Beischer, M., Personal Communication.

111 Bolie, V., "Relationship of Pulse Wave Velocity to Cardiac Output," Spacelabs, Inc. Report SR 63-1003, 1963.

112 Agress, C.M., and Fields, L.G., "New Method for Analyzing Heart Vibrations, I. Low Frequency Vibrations," Am. J. of Circ., pp 184-190, August, 1959.

113 Rosa, L.M., "The Displacement Vibrocardiogram of the Precordium in the Low Frequency Range," Am. J. of Circ., pp 191-199, August, 1959.

114 MacDonald, S.A., Blood Flow in Arteries, Williams and Wilkens, Baltimore, 1960.

115 Bolie, V., Personal Communication.

116 Weltman, G.A., and Lyman, J., "The Effects of Electronic Transformation on the Pattern of Myoelectric Activity During Arm Movement," Biotech. Lab. Tech. Report No. 6, UCLA, 1960.

117 Inman, V.T., et al., "Relation of Human Electromyogram to Muscular Tension," UCLA Dept. of Engr. Pros. Develop. Res. Proj., Issue 18 of Series 11, 1951.

118 Bigland, B., and Lippold, O.C.J., "The Relation Between Force, Velocity and Integrated Electrical Activity in Human Muscle," J. Physiol., 123, 214-224, 1954.

119 Eason, R.G., "An Electromyographic Study of Impairment and Estimates of Subjective Effort Associated with Voluntary Muscular Contraction," NEL Report 898, 1959.

120 Sullivan, G.H., and Weltman, G.A., "A Low Mass Electrode for Bioelectric Recording," J. of Appl. Physiol., 16(5):939, 1961.

121 Levine, R., Personal Communication.

122 Rees, D. W., and Copeland, Nola K., Discrimination of Differences in Mass of Weightlessness Objects, WADD Technical Report 60-601, Wright Air Development Division, Wright-Patterson, AFB, Ohio, Dec. 1960.

123 Bartley, S.H., Vision, D. VanNostrand Co., Inc., New York, 1941.

124 French, John W., "The Description of Aptitude and Achievement Tests in Terms of Rotated Factors," 1951, Psychometric Monographs, No. 5.

125 Cronbach, Lee J., Essentials of Psychological Testing, Harper, 1949 New York.

126 Parker, James F., Jr. and Edwin A. Fleishman, Prediction of Advanced Levels of Proficiency in a Complex Tracking Task, WADC Tech. Rept. 59-255, December 1959.

127 Fleishman, Edwin A., and Ellison, Gaylord D., A Factor Analysis of Manipulative Tests, J. Appl. Psychol., 46, 1962, 96-105.

128 Seashore, R.H., Buxton, C.E., and McCollom, I.N., Multiple Factorial Analysis of Fine Motor Skills, Amer. J. Psychol., 1940, 53, 251-259.

129 Thurstone, L.L., A Factorial Study of Perception, 1944, Psychometric Monograph No. 4.

130 Denner, B., Wapner, S., McFarland, J.H., and Werner, H., Rhythmic Activity and the Preception of Time, Amer. J. Psychol., 1963, 76, 287-292.

131 Adams, O.S., and Levine, R.B., Research to Investigate Factors Affecting Multiple-Task Psychomotor Performance, WADC Technical Report 59-120, March 1959.

132 Woodrow, H., The Common Factors in Fifty-Two Mental Tests, Psychometrika, 1939, 4, 99-108.

133 Brackett, H.R. and Battig, W.F., Method of Pretaining and Knowledge of Results in Paired Associate Learning under Conditions of Repetition and Non-Repetition. Amer. J. Psychol., 1963, 76, 66-73.

134 French, John W., Ekstrom, Ruth B., and Price, L.A., Manual for Kit of Reference Tests for Cognitive Factors, ETS, 1963.

135 Monty, R.A., Effects of Post-Detection Response Complexity on Subsequent Monitoring Behavior. Human Factors, 1962, 4, 201-208.

136. Douglas, Anna G., A Tachistoscopic Study of the Order of Emergency in the Process of Perception, Psychological Monographs, 1947, 61, No. 287.

137 "Table E. Distribution of t" from McNemar, Q., "Psychological Statistics," J. Wiley & Sons, Inc., New York, New York, 1962.

138 Ray, James T., Martin, O. Edmund, Jr., and Alluisi, Earl A., Human Performance as a Function of the Work-Rest Cycle, NRC Committee on Bio-Astronautics, 1961. National Academy of Sciences, National Research Council.

139 Adams, O.S., and Chiles, W.D., Human Performance as a Function of the Work-Rest Cycle, Wright Air Development Division, Report TR-60-2481, March, 1960.

140 Arthur, G.R., J.F. Slomski, and H.D. Thompson, "Engineering Design of Manned Orbital Space Stations," Institute of Aeronautical Sciences, IAS 63-34, January 21-23, 1963.

141 Hess, W.N., Type of Data Currently Available on the Artificial Radiation Belt, NASA (CFSC), June 25, 1963.

142 Smith, Gordon, "Space-Borne Computers," Research and Development Handbook, 1963-64.