950 448

N64-27280

80p

Final Technical Report

F-B2015

A COMPUTER SOLUTION FOR HYDROSTATIC BEARINGS WITH VARIABLE FILM THICKNESS

by

J. G. Hinkle
V. Castelli

January 11, 1963

Prepared for

CALIFORNIA INSTITUTE OF TECHNOLOGY
Jet Propulsion Laboratory

Contract No. 950 448

THE FRANKLIN INSTITUTE
LABORATORIES FOR RESEARCH AND DEVELOPMENT
PHILADELPHIA PENNSYLVANIA

63-615

THE FRANKLIN INSTITUTE • *Laboratories for Research and Development*

Final Technical Report

F-B2015

A COMPUTER SOLUTION FOR HYDROSTATIC BEARINGS WITH VARIABLE FILM THICKNESS

by

J. G. Hinkle
V. Castelli

January 11, 1963

Prepared for

CALIFORNIA INSTITUTE OF TECHNOLOGY
Jet Propulsion Laboratory

Contract No. 950 448

F-B2015

N64-27280

ABSTRACT

27280

This is a final report describing the development and use of a computer solution of hydrostatic bearing problems with consideration of the effect of variable film thickness. The basic equations, numerical approximations, method of solution, numerical treatment and Fortran Program are presented along with instructions on the use of the program and a sample problem.

author

TABLE OF CONTENTS

	Page
ABSTRACT	i
INTRODUCTION	1
BASIC EQUATIONS AND NUMERICAL APPROXIMATIONS	2
METHOD OF SOLUTION	3
1. Specified Flow to Each Recess	5
2. Specified Flow to Pairs of Recesses with Capillary Compensation	5
3. Common Reservoir with Specified Pressure and Capillary Feed to Each Recess	6
NUMERICAL TREATMENT	7
COMPUTER PROGRAM	9
1. Subroutine FORMH	9
2. Subroutine TILTH	9
3. Subroutine REYN	10
4. Subroutine FLOW	10
USE OF THE PROGRAM AND SAMPLE PROBLEMS	15
COMMENTS	19
NOMENCLATURE	21
APPENDIX I PROGRAM BLOCK DIAGRAM, FORTRAN INSTRUCTION LISTINGS, IBM 7090 COMPILATION RECORDS, FLOW CHARTS	
APPENDIX II IBM 7090 LOADING RECORD (SIX SUBPROGRAMS)	
APPENDIX III INPUT GUIDE CHART	
APPENDIX IV SAMPLE PROBLEM INPUT DATA AND OUTPUT RESULTS	

LIST OF FIGURES

Figure No.		Page
1	Sample Convergence-Truncation Diagram	12
2	Sample Problem Load--Flow, Clearance Relation	17

INTRODUCTION

The increasing demands for bearings to support heavy loads have caused the development of hydrostatic lubrication to proceed at an accelerated pace. This was accompanied by a need for more sophisticated analysis of bearing characteristics. For some years hydrostatic bearings have been analyzed by techniques that fell short of a rigorous analysis. This was because of the impossibility of producing by hand an exact analytical solution and, therefore, the necessity for resorting to techniques yielding approximate results, e.g., the electric analog.

One of the major shortcomings of the conducting-sheet electric-analog is its inability to treat problems involving non-uniform film thicknesses. These problems can often be adequately treated by numerical integration techniques, the utilization of which is only hampered by the extremely lengthy and tedious calculations they require. However, the recent development of high speed digital computers has eliminated this drawback, and numerical integration techniques are at present quite feasible.

In the case at hand, hydrostatic bearings are to be designed for the support of a large radio telescope antenna. A number of rectangular pads will transfer the load of the moving superstructure through the pressurized film of oil to a stationary member on the concrete base. While at first glance the analysis of the bearing (flat slider) appears to offer no problem; in reality, the unit loads are high enough to give rise to non-negligible distortions of the bearing members thus requiring the treatment of variable film thicknesses.

The Franklin Institute has developed a computer program for the evaluation of pressure distributions, loads, moments, and flows in a hydrostatically-lubricated, rectangular bearing-pad with four or six

symmetrically placed rectangular recesses. The lubricant is to be incompressible, the clearance non-uniform, and the fluid supply one of three specified types:

1. Separate pumps feeding each recess.
2. Separate pumps feeding pairs of recesses with capillary compensation.
3. Common reservoir feeding all recesses with capillary compensation.

This report contains details of the hydrodynamic equations used to analyze the problem, of the numerical technique used for solution, and of the Fortran Program executing the solution complete with block diagrams and flow charts. A guide chart is furnished complete with all the information necessary for using the program and compiling the appropriate input data cards. A sample problem complete with output is also furnished.

BASIC EQUATIONS AND NUMERICAL APPROXIMATIONS

Utilizing the usual lubrication approximations for a continuous film bearing operating with incompressible lubrication, Reynolds Equation is taken to govern the pressure distribution in the clearance space. For bearings with negligible amount of relative motion, Reynolds Equation assumes the following form*

$$\frac{\partial}{\partial x}\left(h^3 \frac{\partial p}{\partial x}\right) + \frac{\partial}{\partial y}\left(h^3 \frac{\partial p}{\partial y}\right) = 0 \qquad [1]$$

For a bearing of rectangular geometry the length of one of the sides can be used as a characteristic length (say L). Then the following dimensionless quantities can be defined in an x-y rectangular coordinate system:

*Analysis and Lubrication of Bearings, Shaw and Macks, Magraw-Hill, 1949.

$$X = \frac{x}{L},$$

$$Y = \frac{y}{L},$$

$$H = \frac{h}{c},$$

$$P = \frac{p - p_a}{p_r - p_a}$$

where c is a characteristic film thickness, p_r is a reference pressure, p_a is the ambient pressure, and h and p refer to film thickness and pressure respectively at location (x,y).

Reynolds equation now assumes the form

$$\left(\frac{\partial^2 P}{\partial X^2} + \frac{\partial^2 P}{\partial Y^2}\right) + \frac{3}{H}\left(\frac{\partial H}{\partial X}\frac{\partial P}{\partial X} + \frac{\partial H}{\partial Y}\frac{\partial P}{\partial Y}\right) = 0 \qquad [2]$$

Three types of bearing feed will be used:

(a) Specified flow to each recess as given by a positive displacement pump feeding the recess.

(b) Specified total flow to pairs of diametrically opposite recesses as fed by a single pump through capillary compensation.

(c) Single reservoir with specified supply pressure feeding all recesses through capillary compensation.

METHOD OF SOLUTION

Due to the linearity in P of Equation [2] it is possible to use the method of superposition. Namely, component solutions, $P_j(X,Y)$, were obtained corresponding to a value of the dimensionless pressure equal to 1 in the jth recess and 0 in all other recesses and at the free boundary. Then the pressure distribution, P(X,Y), corresponding to any operating conditions is expressible as the linear combination

$$P(X,Y) = \sum_j \alpha_j P_j (X,Y) \qquad [3]$$

where the α_j is a dimensionless number representing pressure in the jth recess. Moreover, if the dimensionless flow, Q_{ij}, out of the ith recess corresponding to the jth component solution (j^{th} recess pressurized) is computed, the dimensionless flow q_i, out of the ith recess when the pressure distribution P(X,Y) exists is,

$$q_i = \sum_j \alpha_j Q_{ij} \qquad [4]$$

Integration of the pressure distribution and evaluation of the moments of the pressure distribution with respect to two non-parallel axes (say X and Y) produces the total load (W) and the location of the center of pressure (ξ, η) in the following manner (see Nomenclature):

$$W_j = \iint P_j(X,Y)\, dXdY \qquad [5]$$

$$\xi_j = \iint \frac{P_j(X,Y)X\, dXdY}{W_j} \quad \text{(No Summation)} \qquad [6]$$

$$\eta_j = \iint \frac{P_j(X,Y)Y\, dXdY}{W_j} \quad \text{(No Summation)} \qquad [7]$$

$$W = \sum_j \alpha_j W_j \qquad [8]$$

$$\xi = \sum_j \frac{\alpha_j \xi_j W_j}{W} \qquad [9]$$

$$\eta = \sum_j \frac{\alpha_j \eta_j W_j}{W} \qquad [10]$$

The attractive feature of the method of superposition is that a given set of component solutions can be utilized with any number of feeding methods as long as the bearing geometry is not altered. The computer program is equipped to take advantage of this feature. Specification of the values of the pertinent parameters in the feeding equations leads to the determination of the appropriate values of the coefficients α_j.

In correspondence to the three feeding methods under consideration the determining equations are:

(1) Specified flow to each recess:

It is necessary to solve the system

$$q_i = \sum_j \alpha_j Q_{ij} \qquad \begin{array}{l} i = 1, \ldots\ldots N \\ j = 1, \ldots\ldots N \end{array} \qquad [11]$$

where

q_i = specified quantities (dimensionless)

Q_{ij} = known quantities from component solutions (dimensionless)

Equations (11) form a non-homogeneous system of N algebraic equations in N unknowns (where N is the number of recesses) which can be solved by conventional methods.

(2) Specified flow to pairs of recesses with capillary compensation.

The following equations hold:

$$QQQ^{(1)} = q_1 + q_2 \qquad [12]$$

$$QQQ^{(2)} = q_3 + q_4 \qquad [13]$$

$$QQQ^{(3)} = q_5 + q_6 \Big\} \text{ only for } N = 6 \qquad [14]$$

$$q_1 = f_1(p^{(1)} - \alpha_1) \qquad [15]$$

$$q_2 = f_2(p^{(1)} - \alpha_2) \qquad [16]$$

$$q_3 = f_3(p^{(2)} - \alpha_3) \qquad [17]$$

$$q_4 = f_4(p^{(2)} - \alpha_4) \qquad [18]$$

$$\left.\begin{aligned} q_5 &= f_5(p^{(3)} - \alpha_5) \qquad [19] \\ q_6 &= f_6(p^{(3)} - \alpha_6) \qquad [20] \end{aligned}\right\} \text{ only for } N = 6$$

$$q_i = \sum_j \alpha_j Q_{ij} \qquad \begin{aligned} i &= 1, \ldots\ldots N \\ j &= 1, \ldots\ldots N \end{aligned} \qquad [21]$$

The system of 2.5N equations [12] through [21] has 2.5N unknowns q_i, $\alpha_{j=i}$ $(i = 1 \ldots N)$, $p^{(K)}$ $(K = 1 \ldots N/2)$ and can be solved by conventional methods. The quantities $QQQ^{(K)}$ $(K = 1 \ldots N/2)$ are specified and the f_i's are known characteristics of the N capillaries.

(3) Common reservoir with specified pressure and capillary feed to each recess.

The following equations hold

$$q_i = f_i(p^{(f)} - \alpha_{j=i}) \qquad i = 1, \ldots\ldots N \qquad [22]$$

$$q_i = \sum_j \alpha_j Q_{ij} \qquad \begin{aligned} i &= 1, \ldots\ldots N \\ j &= 1, \ldots\ldots N \end{aligned} \qquad [23]$$

This system of 2N equations in the 2N unknowns q_i and $\alpha_{j=i}$ $(i = 1, \ldots N)$, can be easily solved by conventional methods.

NUMERICAL TREATMENT

Equation [2] is approximated by numerical methods with the adoption of "three point, central difference" formulae. Thus the bearing area is divided in K · M rectangular elements. The pressure distribution is represented by its values at the node points of the resulting grid.

The coordinates of the nodal points are

$$X_k = (i - 1)\,\Delta X, \qquad [24]$$

$$Y_m = (j - 1)\,\Delta Y. \qquad [25]$$

where i and j represent the number of K and M increments respectively along the X and Y axes. (Note that this use of i and j differs from the use of i and j as recess locations).

For the pressures

$$P_{k,m} = P\left(X_k, Y_m\right), \qquad [26]$$

$$\left.\frac{\partial P}{\partial X}\right|_{X_k Y_m} = \frac{P_{i+1,\,j} - P_{i-1,\,j}}{2\,\Delta X}, \qquad [27]$$

$$\left.\frac{\partial P}{\partial Y}\right|_{X_k Y_m} = \frac{P_{i,\,j+1} - P_{i,\,j-1}}{2\,\Delta Y}, \qquad [28]$$

$$\left.\frac{\partial^2 P}{\partial X^2}\right|_{X_k Y_m} = \frac{P_{i+1,\,j} - 2P_{i,\,j} + P_{i-1,\,j}}{\Delta X^2}, \qquad [29]$$

$$\left.\frac{\partial^2 P}{\partial Y^2}\right|_{X_k Y_m} = \frac{P_{i,\,j+1} - 2P_{i,\,j} + P_{i,\,j-1}}{\Delta Y^2}, \qquad [30]$$

Equation [2] becomes

$$\frac{P_{i+1,\,j} + P_{i-1,\,j}}{\Delta X^2} + \frac{P_{i,\,j+1} - P_{i,\,j-1}}{\Delta Y^2} - 2P_{i,j}\left(\frac{1}{\Delta X^2} + \frac{1}{\Delta Y^2}\right)$$

$$+ \frac{3}{H_{k,m}}\left(\frac{P_{i+1,\,j} - P_{i-1,\,j}}{2\Delta X}\left.\frac{\partial H}{\partial X}\right|_{X_k Y_m} + \frac{P_{i,\,j+1} - P_{i,\,j-1}}{2\Delta Y}\left.\frac{\partial H}{\partial Y}\right|_{X_k Y_m}\right) = 0 \qquad [31]$$

which is solved for $P_{k,m}$.

$$P_{k,m}^{\text{(evaluated)}} = \frac{1}{2(1+\alpha)}\left[P_{i+1,\,j} + P_{i-1,j} + \left\{P_{i+1,\,j} - P_{i-1,\,j}\right\}\right.$$

$$\left.\left(HX_{i,j}\right) + \alpha\left\{P_{i,\,j+1} + P_{i,\,j-1} + \left(P_{i,\,j+1} - P_{i,\,j-1}\right)\left(HY_{i,j}\right)\right\}\right]$$

$$\alpha = \frac{\text{Y Pad Dimension}}{\text{X Pad Dimension}}$$

where

$$HX_{i,j} = 1.5\left.\frac{\partial H}{\partial X}\right|_{i,j}\frac{\Delta X}{H_{i,j}}$$

$$HY_{i,j} = 1.5\left.\frac{\partial H}{\partial Y}\right|_{i,j}\frac{\Delta Y}{H_{i,j}}$$

Starting with an assumed pressure distribution, a value of the pressure $P_{k,m}$ at a grid point is evaluated in terms of the pressure at the four immediately neighboring points.

Assuming

$$P'_{k,m} = \gamma P^{(evaluated)}_{k,m} + (1 - \gamma) P^{(old)}_{k,m} \qquad [32]$$

to be a new pressure distribution, the process is repeated until negligible changes are predicted by any one iteration. γ is called a "relaxation factor" and its magnitude sets the rate of growth of the pressure distribution. Limiting the value of γ is the well known phenomenon of numerical instability.

For excessive values of γ the rate of growth can be seen to increase steadily in time thereby indicating lack of convergence of the iteration. The occurrence of this phenomenon is internally detected and is automatically eliminated by successive reduction of the value of γ by the factor 0.8. The initial value of $\gamma = 1.5$ was revealed to be overly-optimistic, and the staff of The Jet Propulsion Laboratory is advised to adopt a value of 1.1 in order to avoid waste of computer time in unstable iterations.

COMPUTER PROGRAM

The computer program is functionally separated into the following four sub-programs.

(1) Subroutine FORMH

Generation of the clearance distribution either by evaluation of appropriate analytic function or by direct input.

(2) Subroutine TILTH

Tilting of clearance distributions already existing in core storage by any specifiable amount.

(3) Subroutine REYN

Generation of the component solutions P_j (X,Y) and the corresponding values of the loads W_j, center of pressure coordinates ξ_j, and η_j, and flows $Q_{i,j}$.

(4) Subroutine FLOW

Matching of the component solutions with the feeding equations and evaluation of the corresponding pressure distribution P (X,Y), load W, center of pressure coordinates ξ and η, and flows out of each recess q_j for any specified feeding conditions.

The program is such that for any given clearance distribution the loading and moment conditions corresponding to several feeding methods can be evaluated by repeated direct entry into part (4). It is also possible to make available to the computer the essential results of component solutions W_j, ξ_j, η_j, $Q_{i,j}$ by direct input, so that new feeding conditions can be studied in combination with component solutions obtained during a previous group of runs.

The internal generation of the clearance distribution is executed by a function of the following type.

Define $X - X_o = s$ where $X_o = A_{22}$

$Y - Y_o = t$ $\quad Y_o = A_{23}$

then

$$H_1(X,Y) = A_1 + A_2 s + A_3 t + A_4 s^2 + A_5 t^2 + A_6 st + A_7 s^3$$

$$+ A_8 t^3 + A_9 s^2 t + A_{10} st^2 + A_{11} \sqrt{A_{12} + A_{13} s^2 + A_{14} t^2}$$

$$+ A_{15} \cos\left(A_{16} s\right) + A_{17} \cos\left(A_{18} t\right) + A_{19} \cos\left(A_{16} s\right) \cos\left(A_{18} t\right)$$

$$- A_{20} \left\{ e^{-A_{21} X} \cos\left(A_{21} X\right) + e^{-A_{21}(1-X)} \cos\left[A_{21}(1 - X)\right] - 2e^{-A_{21}/2} \cos\left(A_{21}/2\right) \right\} \qquad [33]$$

The inclusion of the part of the preceeding expression containing the coefficients A_{20} and A_{21} was motivated by the results of analyses of the deformation of a beam on elastic foundations under a uniformly distributed load over a finite region**.

The constants A_{20} and A_{21} are defined as,

$$A_{20} = \frac{\text{load per unit length}}{2kc}$$

$$A_{21} = \Lambda = \lambda L$$

where

$$\lambda = \sqrt[4]{k/4\,E\,I}$$

It should be noticed that these terms detract from any clearance distribution given by the remainder of the formula an amount equal to the difference between the deflection at the center and the deflection at any point. It is also the task of FORMH to compile an internal tabulation of the derivatives of the clearance distribution necessary for the solution.

Subroutine TILTH acts by the use of the following formula:

$$H(X,Y) = H_1(X_1,Y_1) + T_x(X - X_1) + T_y(Y - Y_1) \qquad [34]$$

**M. Het'enji, Beams on Elastic Foundation, The University of Michigan Press.

This corresponds to saying that the line,

$$T_x \; X - X_1 \; + T_y \; Y - Y_1 \; = 0$$

is the hinge and that the bearing is tilted in space by an amount,

$$\beta = \; T_x^{\;2} \; + \; T_y^{\;2} \qquad [35]$$

This feature is particularly useful in the evaluation of restoring moments corresponding to misalignments. The use of TILTH is optional.

In the use of subroutine REYN, it is important to adopt an appropriate value of the truncation constant (TRUNC). Indeed, a large value of TRUNC will accept component solutions that are only a rough approximation to the asymptotic solution, whereas, exceedingly small values of TRUNC will result in wastefully long computation time.

A sample of the behavior of the iteration procedure is given in Figure 1, suggesting that a desirable value of TRUNC should be in the range of 0.00015 to 0.00030. Internally TRUNC is matched against the total growth of the component pressure profile in one iteration averaged over the total number of active grid points. If the growth is less than the specified value of TRUNC, the iteration is terminated and the solution accepted.

It was mentioned previously that the value of the relaxation factor γ is internally adjusted to cope with numerical instability. However, if persistent occurrence of this phenomenon forces the adoption of a value of γ lower than 0.16, subroutine REYN abandons the solution, and a note to this effect is introduced in the output tape.

SAMPLE CONVERGENCE-TRUNCATION DIAGRAM

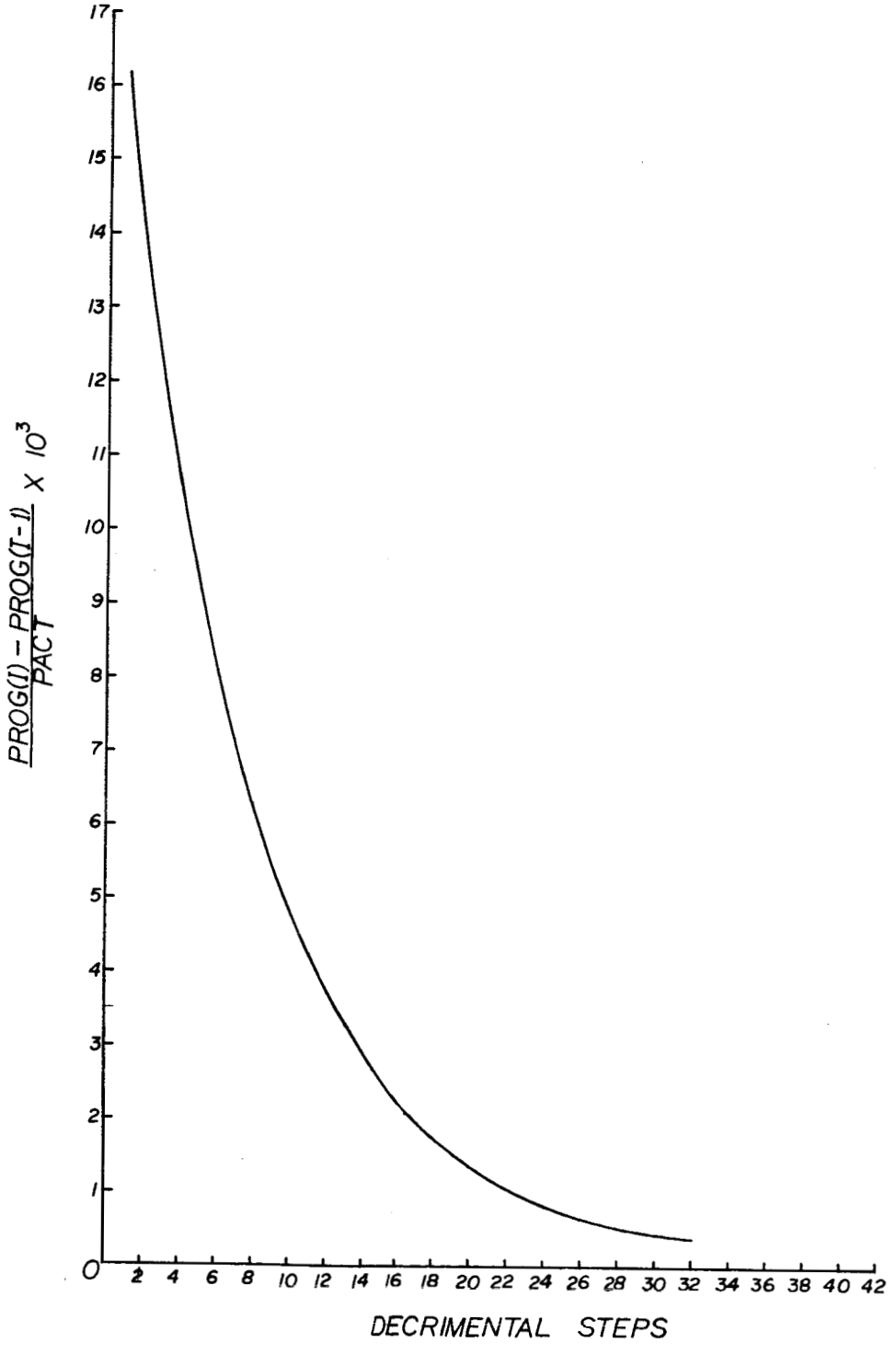

Use of subroutine REYN requires the specification of the quantity LITER. Termination of the iteration is forced whenever a number of iterations equal to LITER have been performed regardless of the truncation criterion. As presently set up, the program will allow a value of LITER up to 300. If larger values become desirable, the dimension of PROG in subroutine REYN should be altered to the maximum value of LITER.

The operation of subroutine FLOW is controlled by the specification of NCASE which, assuming one of the values 1, 2, 3, indicates the adoption of the first, second, or third feeding method respectively.

The quantity IOUT enables the user to obtain the pressure and clearance profiles on the output tape (IOUT = 1). A value of IOUT different from 1 specifies that output of those distributions is not desired.

The following information will be useful in handling the quantities used in subroutine REYN.

Equation Symbols	Fortran Symbols	Definition
W_j	W (I)	$w/L^2(P_r - P_a)$
ξ_j	CSI (I)	x_i/L (See Nomencl.)
η_j	ETA (I)	y_i/L (See Nomencl.)
Q_{ij}	Q (I, J)	$\frac{(\text{flow})\ (12\mu)}{p_r - p_a}$
q_i	QQ (I)	$\frac{(\text{flow})\ (12\mu)}{p_r - p_a}$
$QQQ^{(K)}$	QQQ (K)	$\frac{(\text{flow})\ (12\mu)}{p_r - p_a}$
f_i	FF (I)	$0.2945\ \frac{d^4}{Cl^3}$
$p^{(f)}$	PF	$\frac{p - p_a}{p_r - p_a}$

Subroutine FLOW makes use of a FUNCTION subprogram (FUNCTION DETER) in order to evaluate 4 x 4 or 6 x 6 determinants.

The utilization of the above mentioned sub-programs in the solution of specific problems is coordinated by the MAIN program. Specification of the quantity NSWICH instructs the program to solve one of five possible problems:

NSWICH = 1; CALL EXIT

NSWICH = 2; Solve flow problem only with read in values of W_j, ξ_j, η_j, $Q_{i,j}$.

NSWICH = 3; Solve new flow problem with component solutions already existing in core storage.

NSWICH = 4; Entirely new problem.

NSWICH = 5; Tilt clearance distributions existing in core storage and solve resulting problem.

In the event NSWICH = 2, the quantity NIMJ should be specified to inform the computer of the number of recesses in the pad under consideration.

Appendix I contains a block diagram of the entire program, the detailed flow charts, Fortran instruction listings, and IBM 7090 compilation records of the six subprograms (MAIN, FLOW, REYN, TILTH, FORMH, DETER).

Appendix II contains the loading record for use with an IBM 7090. This information is essential if the allowable grid size of 67 x 45 is to be extended.

USE OF THE PROGRAM AND SAMPLE PROBLEMS

All the information necessary for complete utilization of the program is contained in the input guide chart presented in Appendix III. As an illustration of its use, consider the following problem.

A flat bearing pad of dimensions 60 x 40 inches contains four symmetrically spaced recesses fed by a constant pressure reservoir through equal capillaries. Find a relation between flow, load, and clearance and evaluate the flow necessary to maintain a clearance of 0.005 inches under a load of 1.5 million pounds. Evaluate the restoring moment caused by tilting the pad so that the clearance at one end of its major dimension is one third of the clearance at the other end.

The necessary input required is compiled through the use of the input guide chart (Appendix III). A grid size of 30 x 20 (K . M) was chosen for this particular case. Both the input data and output results are shown in Appendix IV.

The output consists of a condensed result page and a listing of the pressure and clearance distributions over the grid. The condensed output page contains:

(a) A run number chosen to be 9005 and 9006 for this case.

(b) Title containing information on the number of recesses and feeding methods.

(c) A digit array representing the configuration of the grid with the following code:

0 - External boundary point.

1 - Recess point.

2 - Sill point.

(d) Values of the essential results of the component solutions.

(e) Final results.

The results show a total dimensionless load of 0.3207. Therefore;

$$\frac{\text{load}}{\left(P_r - P_a\right)L^2} = 0.3207$$

and, since L = 60 inches,

$$P_r - P_a = \text{load}/1154.52$$

Now, the dimensionless flow

$$Q = \frac{\text{flow } (12\mu)}{\left(P_r - P_a\right)C^3}$$

From the results Q = 13.485

therefore

$$\frac{\text{Flow}}{\text{Load}} = \frac{(13.485)\ C^3}{12\mu\ (1154.52)}$$

Adopting a value of μ of 30×10^{-6} Reyns,

$$\frac{\text{Flow}}{\text{Load}} = 32.445\ C^3$$

This relation is graphically illustrated in Figure 2. It is seen that a clearance of 0.005" will be maintained under a load of 1.5×10^6 pounds if a flow of 6.1 in^3/sec. or 1.59 gal/min. is provided. This corresponds to

SAMPLE PROBLEM
LOAD, FLOW, CLEARANCE RELATION

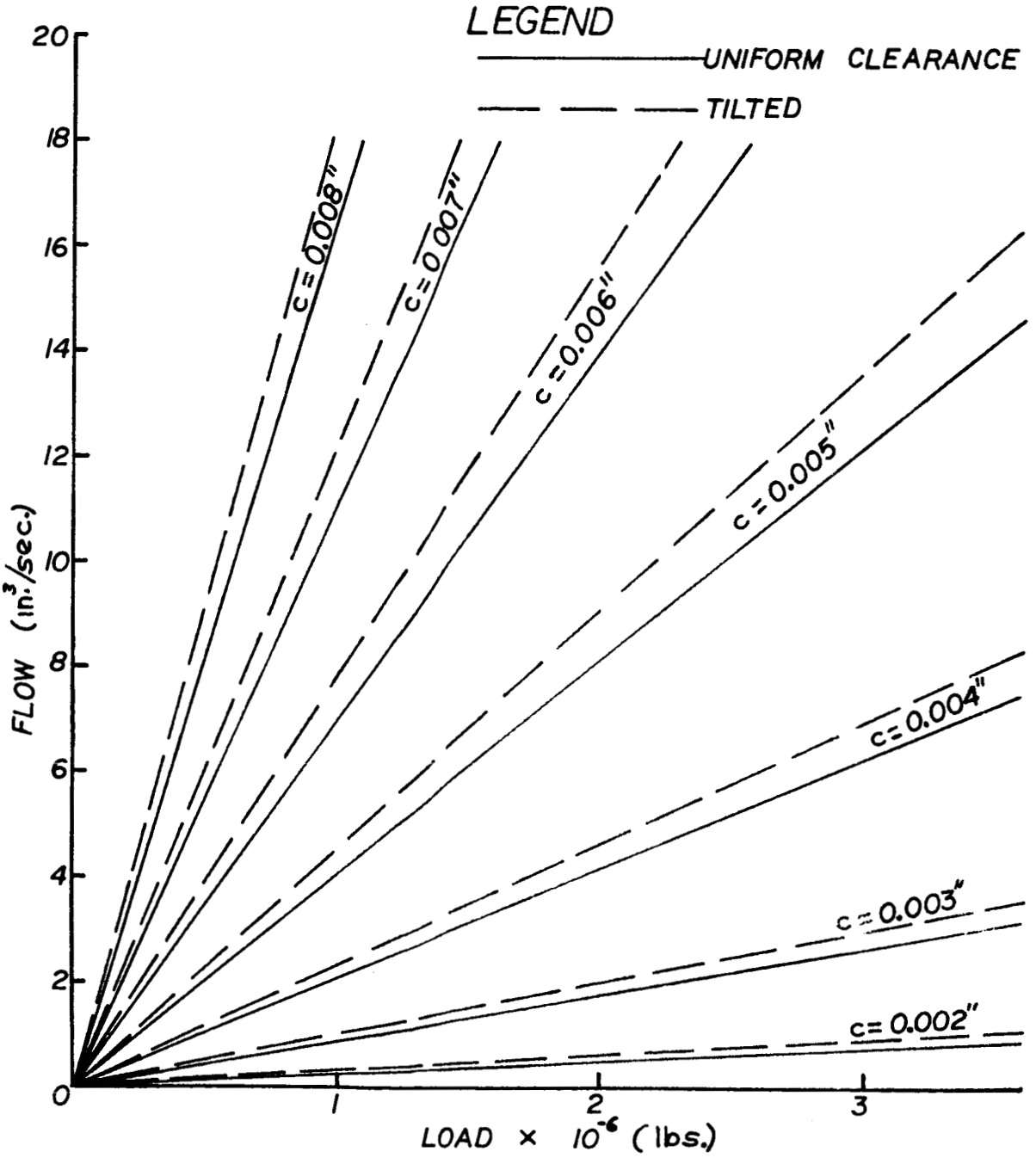

$$P_r - P_a = \frac{\text{load}}{1154.52} = 1300 \text{ psi}$$

Therefore the pressure in each recess is

$$P_r = 0.7191\left(P_r - P_a\right) = 934.8 \text{ psi}$$

The reservoir pressure is

$$P_f = 1 \times 1300 = 1300 \text{ psi}$$

The reservoir pressure can be altered to any desired value by appropriate choice of capillaries without further machine solution.

Run 9006 gives a solution to the same problem with the required amount of tilt. The flow vs. load results are plotted in the same Figure 2 with dashed lines. Assuming that the flow remained at its value of 6.1 in^3/sec, the clearance assumes the following distribution:

0.002412" at one edge

0.004824" at the center

0.007236" at the other edge.

Meanwhile, the center of pressure has moved from the center to a position

$$(0.5 - 0.4507)\ (60") = 2.958 \text{ inches from the center,}$$

thus creating a righting moment of 370,000 ft-lbs about the center $\left(\frac{2.958}{12} \times 1.5 \times 10^6\right)$. The reservoir pressure climbed to 1336 psi. The flows out of each recess are not equal and are distributed as follows:

$$\left(\frac{1.99}{14.643}\right)(6.1) = 0.829 \text{ in}^3/\text{sec}$$

out of the recesses with the narrow clearance, and

$$\left(\frac{5.33}{14.643}\right)(6.1) = 2.22 \text{ in}^3/\text{sec}$$

out of the recesses with the wide clearance.

It can be said in general that if the applied load is known, the relation

$$P_r - P_a = \frac{\text{applied load}}{\text{total dimensionless load} \times L^2}$$

determines the "pressure units". All dimensionless pressures should be multiplied by this value of $P_r - P_a$ in order to acquire dimensional meaning.

The relation

$$\text{Flow} = \frac{(\text{dimensionless flow})\left(P_r - P_a\right)\left(C^3\right)}{12\,\mu}$$

should be used as the basis between flow and clearance to be adopted for the bearing under consideration. These criteria are valid regardless of the feeding method so that further examples are not deemed necessary.

COMMENTS

It will be remembered that the originally proposed technique of solution (Franklin Institute Proposal No. 4105GS) consisted of simultaneous relaxation of the pressure profile and the feeding problem. Therefore, the technique presented in this report departs from that originally proposed.

It is felt that the originally proposed double relaxation technique would be approximately 2.5 to 3 times faster than the superposition technique for any one problem consisting of a particular combination of clearance distribution and feeding conditions. It should be noted, however, that a complete solution is necessary each time either the feeding conditions or the clearance distribution is changed. On the

other hand, the superposition technique allows the evaluation of a new solution corresponding to a change in feeding conditions only. Hence, a relatively negligible amount of time is required to obtain solutions for different clearance distributions using the superposition technique.

The choice between the two methods is dependent on the particular purpose of the requested program. In the judgment of The Franklin Institute, the Jet Propulsion Laboratories specified their problem in a manner which would indicate a definite advantage in the use of the superposition technique. Consultation of cognizant Jet Propulsion Laboratories personnel resulted in the adoption of the superposition technique.

The program was written and tested first on the IBM 7074 at the IBM Datacenter in Philadelphia and second on an IBM 7094 at the Jet Propulsion Laboratories in Pasadena, California. The clearance generation, the iteration of Reynolds equation and the flow computations were all hand checked to the best of our knowledge and a number of sample results have been found to yield bearing characteristics in good agreement with those made evident by practical experience. In the judgment of the Franklin Institute personnel all the goals set forth in the work proposal have been achieved by this program.

J. G. Hinkle
Project Engineer

Approved by:

W. W. Shugarts, Jr., Manager
Friction & Lubrication Laboratory

N. R. Droulard
Technical Director

F. L. Jackson
Director of Laboratories

NOMENCLATURE

A_n = dimensionless clearance coefficients

E = Youngs Modulus (psi)

H = dimensionless film thickness = h/c

K = the number of grid cells in the X direction

L = length of pad in the X direction

M = the number of grid cells in the Y direction

P = dimensionless pressure $p - p_a / p_r - p_a$

PF = dimensionless reservoir pressure

P_{ij} = dimensionless pressure at grid point i,j

Q_{ij} = dimensionless flow known from component solutions

$$\left[\frac{(\text{flow})\ (12\mu)}{p_r - p_a\ c^3}\right]$$

QQ_i = Fortran name of total flow out of recess i

QQQ_K = Fortran name of total flow-out of Kth pair of recesses

T_x = dimensionless tilt components in X direction

T_y = dimensionless tilt components in Y direction

W = dimensionless load $[w/L^2(p_r - p_a)]$

W_j = dimensionless load of the jth component solution

X = dimensionless X-coordinate (x/L)

Y = dimensionless y-coordinate (y/L)

c = a characteristic film thickness, (in.)

d = capillary diameter (in.)

NOMENCLATURE (Cont'd)

f = capillary flow factors = $0.2945 \frac{d^4}{Cl^3}$

h = film thickness, (in.)

i = grid index

j = grid index

k = modulus of the foundation (lb/in^3) as defined in reference**

l = capillary length (in.)

p = pressure, (psia)

p_a = ambient pressure, (psia)

p_r = reference pressure, (psia)

q_i = dimensionless flow out of the ith recess

$[(\text{flow})(12\mu)/(p_r - p_a)C^3]$

s = $X - X_o$

t = $Y - Y_o$

w = load, (lbs)

x = cartesian coordinate, (in.)

y = cartesian coordinate, (in.)

Λ = λL

α = ratio of y and x pad dimensions

α_j = dimensionless recess pressure

β = slope of tilted pad in h, x, y space

γ = relaxation factor governing pressure distribution growth

ΔX = $1/K$

ΔY = $\alpha(\Delta X)\left(\frac{K}{M}\right)$

NOMENCLATURE (Cont'd)

η = dimensionless Y coordinate of center of pressure

η_i = dimensionless Y coordinate of center of pressure for i^{th} component solution

λ = $\sqrt[4]{\frac{k}{4\,E\,I}}$

μ = viscosity coefficient (reyns)

ξ = dimensionless X coordinate of center of pressure

ξ_i = dimensionless X coordinate center of pressure for i^{th} component solution

APPENDIX I

PROGRAM BLOCK DIAGRAM

MAIN SUBPROGRAM

Fortran Instruction Listings
IBM 7090 Compilation Records
Flow Chart

FLOW SUBPROGRAM

Fortran Instruction Listings
IBM 7090 Compilation Records
Flow Chart

REYN SUBPROGRAM

Fortran Instruction Listings
IBM 7090 Compilation Records
Flow Chart

FORMH SUBPROGRAM

Fortran Instruction Listings
IBM 7090 Compilation Records
Flow Chart

TILTH SUBPROGRAM

Fortran Instruction Listings
IBM 7090 Compilation Records
Flow Chart

FUNCTION DETER SUBPROGRAM

Fortran Instruction Listings
IBM 7090 Compilation Records
Flow Chart

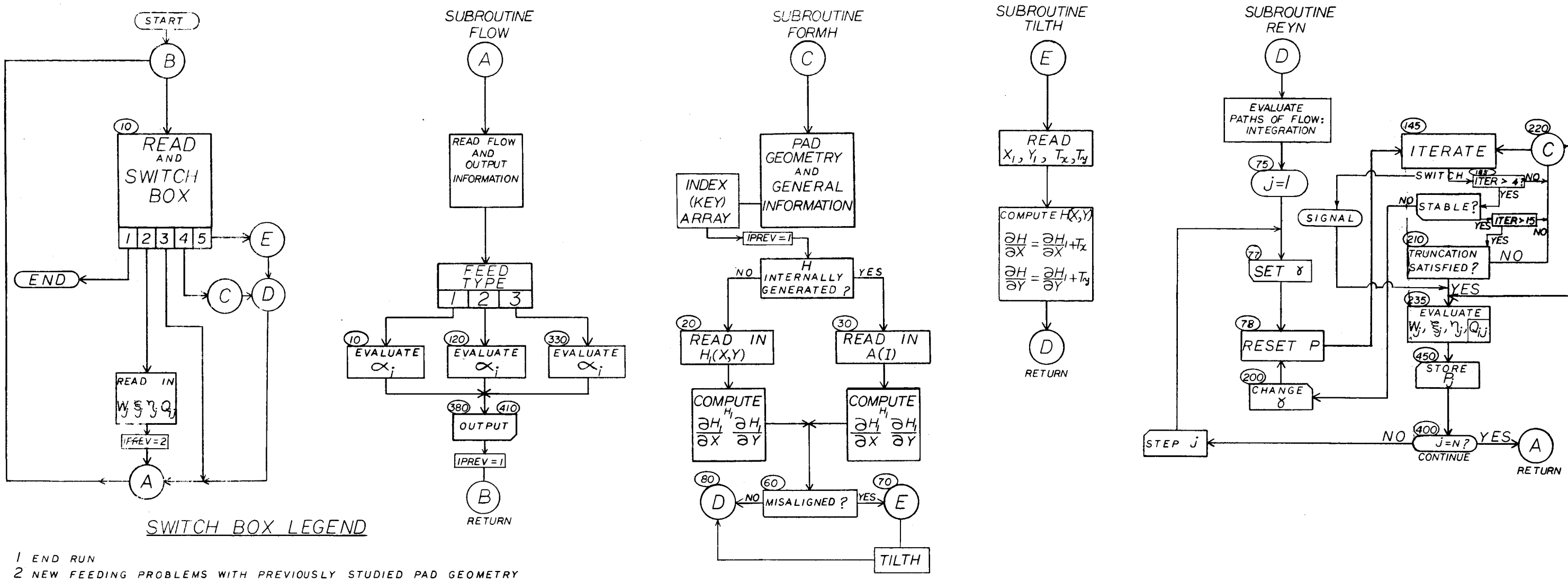

SWITCH BOX LEGEND

1 END RUN
2 NEW FEEDING PROBLEMS WITH PREVIOUSLY STUDIED PAD GEOMETRY
3 NEW FEEDING PROBLEMS WITH NEW PAD GEOMETRY
4 INTRODUCE NEW GEOMETRY
5 GENERATE NEW DATA FOR SAME GEOMETRY WITH MISALIGNMENT

JPL VARIABLE FILM HYDROSTATIC BEARING PROGRAM-- BLOCK DIAGRAM

```
      MAIN PROGRAM FOR HYDROSTATIC BEARINGS WITH VARIABLE FILM THICKNES
C      DEVELOPED FOR J.P.L.  JH/VC  NOVEMBER, 1962
      DIMENSION H(67,45),HX(67,45),HY(67,45),Q(6,6),W(6),CSI(6),
     1 ETA(6)
      COMMON KK, MM, DX, DY, H, HX, HY, K1, K2, K3, M1, M2, TRUNC, Q,
     1 LIMJ, W, CSI, ETA, IPREV
      REWIND 15
   10 READ INPUT TAPE 5,1,NSWICH,NIMJ
    1 FORMAT (I1, I2)
      GO TO (20,30,40,50,60), NSWICH
   20 CONTINUE
      CALL EXIT
   30 READ INPUT TAPE 5,2,(W(J),J=1,6),(CSI(J),J=1,6),(ETA(J),J=1,6),((Q
     1(I,J), J = 1,6), I = 1,NIMJ)
    2 FORMAT  ( 6E12.6)
      LIMJ = NIMJ
      IPREV = 2
      CALL FLOW
      GO TO 10
   40 CALL FLOW
      GO TO 10
   50 CALL FORMH
      CALL REYN
      CALL FLOW
      GO TO 10
   60 CALL TILTH
      CALL REYN
      CALL FLOW
      GO TO 10
      END(1,0,0,0,0,0,0,0,0,1,0,0,0,0,0)
```

MAIN PROGRAM FOR HYDROSTATIC BEARINGS WITH VARIABLE FILM THICKNES

STORAGE NOT USED BY PROGRAM

DEC	OCT	DEC	OCT
106	00152	23450	55632

STORAGE LOCATIONS FOR VARIABLES APPEARING IN COMMON STATEMENTS

	DEC	OCT		DEC	OCT		DEC	OCT		DEC	OCT		DEC	OCT
CSI	23463	55647	DX	32559	77457	DY	32558	77456	ETA	23457	55641	H	32557	77455
HX	29542	71546	HY	26527	63637	IPREV	23451	55633	K1	23512	55730	K2	23511	55727
K3	23510	55726	KK	32561	77461	LIMJ	23470	55656	M1	23509	55725	M2	23508	55724
MM	32560	77460	Q	23506	55722	TRUNC	23507	55723	W	23469	55655			

STORAGE LOCATIONS FOR VARIABLES NOT APPEARING IN COMMON, DIMENSION, OR EQUIVALENCE STATEMENT

	DEC	OCT		DEC	OCT		DEC	OCT		DEC	OCT		DEC	OCT
NIMJ	105	00151	NSWICH	104	00150									

SYMBOLS AND LOCATIONS FOR SOURCE PROGRAM FORMAT STATEMENTS

	EFN	LOC		EFN	LOC		EFN	LOC		EFN	LOC		EFN	LOC
8)1	1	00146	8)2	2	00144									

LOCATIONS FOR OTHER SYMBOLS NOT APPEARING IN SOURCE PROGRAM

	DEC	OCT		DEC	OCT		DEC	OCT		DEC	OCT		DEC	OCT
2)	89	00131	4)	32767	77777	6)	93	00135	C)G0	103	00147	D)401	16	00020
D)40F	77	00115	E)3	37	00045	E)E	73	00111	E)F	76	00114	E)G	84	00124

LOCATIONS OF NAMES IN TRANSFER VECTOR

	DEC	OCT		DEC	OCT		DEC	OCT		DEC	OCT		DEC	OCT
EXIT	4	00004	FLOW	5	00005	FORMH	6	00006	REYN	7	00007	TILTH	8	00010
(FPT)	0	00000	(RTN)	3	00003	(RWT)	1	00001	(TSH)	2	00002			

ENTRY POINTS TO SUBROUTINES NOT OUTPUT FROM LIBRARY

EXIT FLOW FORMH REYN TILTH (FPT) (RTN) (RWT) (TSH)

EXTERNAL FORMULA NUMBERS WITH CORRESPONDING INTERNAL FORMULA NUMBERS AND OCTAL LOCATIONS

EFN	IFN	LOC	EFN	IFN	LOC	EFN	IFN	LOC	EFN	IFN	LOC	EFN	IFN	LOC
10	7	00021	20	10	00043	30	12	00046	40	32	00112	50	34	00116
60	38	00125												

MAIN PROGRAM

JPL VARIABLE FILM HYDROSTATIC BEARING PROGRAM -- BLOCK DIAGRAM

DIMENSION: H, HX, HY, Q, W, CSI, ETA

COMMON: KK, MM, DX, DY, H, HX, HY, K1, K2, K3, M1, M2, TRUNC, Q, LIMJ, W, CSI, ETA, IPREV

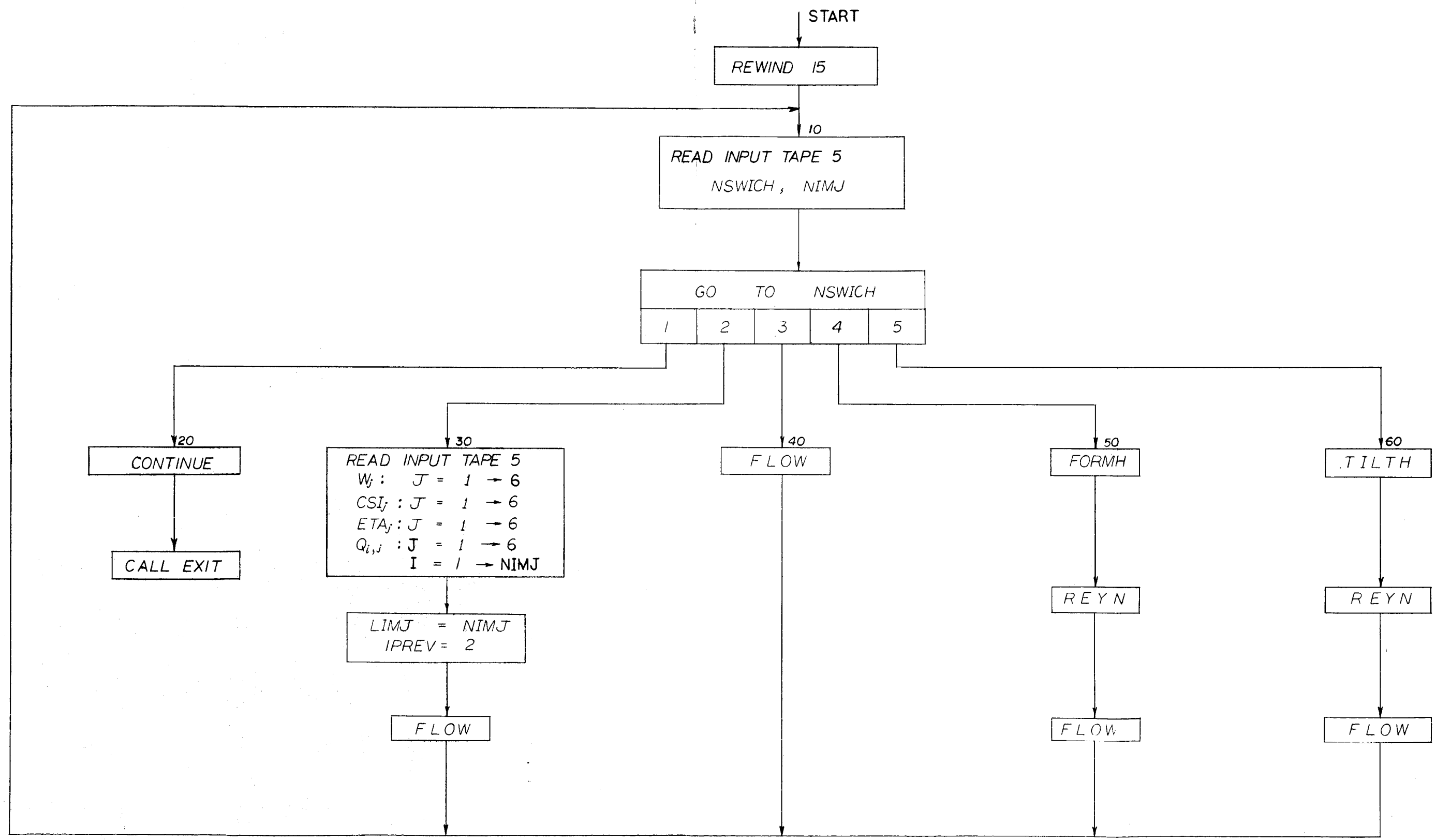

```
      SUBROUTINE FLOW

      SUBROUTINE FLOW
      DIMENSION H(67,45),HX(67,45),HY(67,45), Q(6,6), AL(6),
     1A(6,6), F(6,6), D( 6), QQQ(6), FF(6), PQ(6), W(6), CSI(6),ETA(6),
     1P(67,45),PPPP(67,45),KEY(67,45),MK(10), T(6,6),TT(6), QQ(6)
      COMMON KK,MM,DX,DY,    H,HX   , HY,K1,K2,K3,M1,M2,TRUNC,Q,LIMJ
     1,W,CSI,ETA,IPREV, KEY, LITER, P
      READ INPUT TAPE 5,1,NRUN,NCASE,IOUT
    1 FORMAT(I5,2I2)
      GO TO (10, 120, 330) ,  NCASE
   10 READ INPUT TAPE 5,2,(QQ(III),III=1,LIMJ)
    2 FORMAT (6E12.4)
      DO 80 LK = 1,LIMJ
      DO 40 I = 1, LIMJ
      DO 40 J = 1, LIMJ
      IF (J - LK) 30, 20, 30
   20 A(I,J) = QQ(I)
      GO TO 40
   30 A(I,J) = Q(I,J)
   40 CONTINUE
      D(LK) = DETER (A,LIMJ)
   80 CONTINUE
      DQ = DETER(Q,LIMJ)
      DO 115 LK = 1, LIMJ
  115  AL(LK) = D(LK) / DQ
      GO TO 380
  120 LIMJ2 = LIMJ / 2
      READ INPUT TAPE 5,2,(QQQ(III),III=1,LIMJ2)
      READ INPUT TAPE 5,2,(FF(III), III=1,LIMJ)
      DO 130 I = 1, LIMJ, 2
      DO 130 J = 1, LIMJ
      T(I,J) = Q(I,J) + Q(I+1,J)
      II = (I+1)/2
  130 TT(I) = QQQ(II)
      DO 200 I = 2, LIMJ, 2
      TT(I) = 0.0
      DO 200 J = 1, LIMJ
      IF (I-1-J) 140, 150, 140
  140 DEL = 0.0
      GO TO 160
  150 DEL = 1.0
  160 IF (I-J) 170, 180, 170
  170 DDEL = 0.0
      GO TO 190
  180 DDEL = 1.0
  190 T(I,J) = (Q(I-1,J)+DEL*FF(I-1))/FF(I-1)-(Q(I,J)+DDEL*FF(I))/FF(I)
  200 CONTINUE
  205 DO 270 LK = 1, LIMJ
      DO 230 I = 1, LIMJ
      DO 230 J = 1, LIMJ
      IF (J-LK) 220, 210, 220
  210 A(I,J) = TT(I)
      GO TO 230
  220  A(I,J) = T(I,J)
  230 CONTINUE
      D(LK) = DETER (A,LIMJ)
  270 CONTINUE
```

```
      SUBROUTINE FLOW
      DT = DETER (T,LIMJ)
      DO 305 LK = 1, LIMJ
  305 AL(LK) = D(LK) / DT
      DO 310 I = 1, LIMJ
      QQ(I) = 0.0
      DO 310 J = 1, LIMJ
  310 QQ(I) = QQ(I) + AL(J) * Q (I,J)
      IF (NCASE - 2 ) 315, 315, 380
  315 DO 320 I = 1, LIMJ2
  320 PQ(I)=QQ(2*I-1)/FF(2*I-1) +AL(2*I-1)
      GO TO 380
  330 READ INPUT TAPE 5,5,PF
    5 FORMAT  (F10.4)
      READ INPUT TAPE 5,2,(FF(III),III=1,LIMJ)
      DO 370 I = 1, LIMJ
      TT(I) = PF*FF(I)
      DO 370 J = 1, LIMJ
      IF (I-J) 340, 350, 340
  340 DDEL = 0.0
      GO TO 360
  350 DDEL = 1.0
  360 T(I,J) = Q(I,J) + DDEL * FF(I)
  370 CONTINUE
      GO TO 205
  380 WW = 0.0
      DO 390 I = 1, LIMJ
  390 WW = WW + AL(I) * W(I)
      CCSI = 0.0
      EETA = 0.0
      DO 400 I = 1, LIMJ
      CCSI = CCSI + AL(I) * CSI(I)*W(I)/WW
  400 EETA = EETA + AL(I) * ETA(I) * W(I)/WW
  410 WRITE OUTPUT TAPE 6,6,NRUN,LIMJ
      GO TO (420, 430, 440),NCASE
  420 WRITE OUTPUT TAPE 6,7
    7 FORMAT (31X 58HFEEDING = POSITIVE DISPLACEMENT PUMPS FEEDING EACH
     1RECESS.   /)
      GO TO 450
  430 WRITE OUTPUT TAPE 6,8
    8 FORMAT(14X 92HFEEDING = POSITIVE DISPLACEMENT PUMPS FEEDING PAIRS
     1OF RECESSES WITH CAPILLARY COMPENSATION.    )
      GO TO 450
  440 WRITE OUTPUT TAPE 6,9,PF
    9 FORMAT (5X 36HFEEDING = COMMON CONSTANT PRESSURE (F7.3,67H ATM.) R
     1ESERVOIR FEEDING ALL RECESSES WITH CAPILLARY COMPENSATION.   /)
  450 IF (NCASE - 2) 452, 451, 452
  451 WRITE OUTPUT TAPE 6,15,(QQQ(I),I=1,LIMJ2)
   15 FORMAT ( 11H PUMP FLOWS  3E18.7   )
  452 GO TO (460, 480), IPREV
  460 WRITE OUTPUT TAPE 6,3,(KEY(I,1),I=1,KK)
      DO 470 J = 2, MM
  470 WRITE OUTPUT TAPE 6,4,(KEY(I,J),I=1,KK)
    3 FORMAT(20H PAD CONFIGURATION.   67I1   )
    4 FORMAT ( 20X  67I1        )
  480 IF (LIMJ-4) 490, 490, 500
  490 WRITE OUTPUT TAPE 6,12,(QQ(I),I=1,4),(Q(1,J),J=1,4),(W(I),I=1,4),
```

```
      SUBROUTINE FLOW
     1(Q(2,J),J=1,4),(CSI(I),I=1,4),(Q(3,J),J=1,4),(ETA(I),I=1,4),(Q(4,J
     1) , J=1,4)
   12 FORMAT ( 8H QQ(I)= 4F9.2,10X10H** Q(I,J)= 4F9.4/8H W(I)=  4F9.4,10
     1X2H**8X 4F9.4/8H CSI(I)= 4F9.4,10X 2H** 8X 4F9.4/8H ETA(I)= 4F9.4,
     110X 2H** 8X 4F9.4 )
      GO TO 510
  500 WRITE OUTPUT TAPE 6,13,(QQ(I),I=1,6),(Q(1,J),J=1,6),(W(I),I=1,6)
     1,(Q(2,J),J=1,6),(CSI(I),I=1,6),(Q(3,J),J=1,6),(ETA(I),I=1,6),(Q(4,
     1J),J=1,6),(Q(5,J),J=1,6),(Q(6,J),J=1,6)
   13 FORMAT( 8H QQ(I)= 6F8.2, 2X 10H** Q(I,J)= 6F8.4/8H W(I)=  6F8.4,2X
     1 2H** 8X 6F8.4/8H CSI(I)= 6F8.4, 2X 2H** 8X 6F8.4/8H ETA(I)= 6F8.4
     1,2X 2H** 8X 6F8.4/58X 2H** 8X 6F8.4/58X 2H** 8X 6F8.4)
  510 IF (NCASE - 2) 530, 520, 520
  520 WRITE OUTPUT TAPE 6,14,(FF(I),I=1,LIMJ)
   14 FORMAT(24H CAPILLARY FACTORS F(I)=   6E16.7 )
  530 QQQQ = 0.0
      DO 540 I=1,LIMJ
  540 QQQQ = QQQQ + QQ(I)
    6 FORMAT (11H1RUN NUMBER I5,27X 29HHYDROSTATIC BEARING PAD WITH  I1,
     1 10H RECESSES.  )
      WRITE OUTPUT TAPE 6,16,WW,CCSI,EETA,QQQQ
   16 FORMAT (27H FINAL RESULTS = TOTAL LOAD  F8.4, 6H  CSI F7.4  , 6H E
     1TA  F7.4, 13H  TOTAL FLOW  E15.7  )
      IF (IOUT - 1) 550, 555, 550
  550 IPREV = 1
      WRITE OUTPUT TAPE 6,8888
 8888 FORMAT(1H1)
      RETURN
   17 FORMAT (8E15.8  )
  555 GO TO(560,556),IPREV
  556 WRITE OUTPUT TAPE 6,5555
 5555 FORMAT(52H0PRESSURE AND CLEARANCE DISTRIBUTIONS NOT AVAILABLE.   )
      GO TO 550
  560 DO 570 I=1,KK
      DO 570 J=1,MM
  570 PPPP(I,J) = 0.0
      REWIND  15
      DO 580 II = 1, LIMJ
      READ TAPE 15,P
      DO 580 I=1,KK
      DO 580 J = 1, MM
  580 PPPP(I,J) = PPPP(I,J) + AL(II) * P( I,J)
      REWIND  15
      KK1 = 0
  590 IF (KK - KK1 - 10) 600, 600, 610
  600 KK2 = KK
      GO TO 620
  610 KK2 = KK1 + 10
  620 DO 630  L = 1,10
  630 MK(L) = KK1 + L
      IF (KK-KK2) 640, 640, 650
  640 KK3 = KK2 - KK1
      WRITE OUTPUT TAPE 6, 18, NRUN,  (MK(L),L = 1,KK3)
      GO TO 660
  650 WRITE OUTPUT TAPE 6, 18,  NRUN, (MK(L), L = 1,10 )
  660 KK11 = KK1 + 1
```

```
      SUBROUTINE FLOW
      DO 670 J = 1, MM
  670 WRITE OUTPUT TAPE 6, 19,J,(PPPP(I,J),I=KK11,KK2)
   19 FORMAT (3H J= I3, 4H,     10F11.4)
      IF ( KK - KK2)  690, 690, 680
  680 KK1 = KK1 + 10
      GO TO 590
   18 FORMAT ( 1H1 49X 22H PRESSURE DISTRIBUTION// 6H RUN  I4, 5H  I= I3
     1,9(8H      I=  I3)/)
  690 CONTINUE
      KK1 = 0
  700 IF (KK-KK1 - 10) 710, 710, 720
  710 KK2 = KK
      GO TO 730
  720 KK2 = KK1 + 10
  730 DO 740 L = 1, 10
  740 MK(L) = KK1 + L
      IF (KK - KK2) 750, 750, 760
  750 KK3 =  KK2 - KK1
      WRITE OUTPUT TAPE 6, 21, NRUN, (MK(L), L = 1,KK3)
   21 FORMAT ( 1H1 49X 22HCLEARANCE DISTRIBUTION //6H RUN  I4, 5H   I=
     1I3, 9( 8H      I= I3)/)
      GO TO 770
  760 WRITE OUTPUT TAPE 6, 21, NRUN,(MK(L),L=1,10)
  770 KK11 = KK1 + 1
      DO 780  J = 1, MM
  780 WRITE OUTPUT TAPE 6, 22, J,(H(I,J), I = KK11,KK2)
   22 FORMAT (3H J= I3, 4H,   10F11.7 )
      IF (KK - KK2)  550, 550, 790
  790 KK1 = KK1 + 10
      GO TO 700
      END(1,0,0,0,0,0,0,0,0,1,0,0,0,0,0)
```

SUBROUTINE FLOW

STORAGE NOT USED BY PROGRAM

DEC	OCT	DEC	OCT
4385	10441	17419	42013

STORAGE LOCATIONS FOR VARIABLES APPEARING IN COMMON STATEMENTS

	DEC	OCT		DEC	OCT		DEC	OCT		DEC	OCT		DEC	OCT
CSI	23463	55647	DX	32559	77457	DY	32558	77456	ETA	23457	55641	H	32557	77455
HX	29542	71546	HY	26527	63637	IPREV	23451	55633	K1	23512	55730	K2	23511	55727
K3	23510	55726	KEY	23450	55632	KK	32561	77461	LIMJ	23470	55656	LITER	20435	47723
M1	23509	55725	M2	23508	55724	MM	32560	77460	P	20434	47722	Q	23506	55722
TRUNC	23507	55723	W	23469	55655									

STORAGE LOCATIONS FOR VARIABLES APPEARING IN DIMENSION AND EQUIVALENCE STATEMENTS

	DEC	OCT		DEC	OCT		DEC	OCT		DEC	OCT		DEC	OCT
AL	4384	10440	A	4332	10354	D	4378	10432	FF	4366	10416	F	4296	10310
MK	4354	10402	PPPP	4260	10244	PQ	4360	10410	QQQ	4372	10424	QQ	4338	10362
T	1245	02335	TT	4344	10370									

STORAGE LOCATIONS FOR VARIABLES NOT APPEARING IN COMMON, DIMENSION, OR EQUIVALENCE STATEMENT

	DEC	OCT		DEC	OCT		DEC	OCT		DEC	OCT		DEC	OCT
CCSI	1209	02271	DDEL	1208	02270	DEL	1207	02267	DQ	1206	02266	DT	1205	02265
EETA	1204	02264	II	1203	02263	IOUT	1202	02262	I	1201	02261	J	1200	02260
KK11	1199	02257	KK1	1198	02256	KK2	1197	02255	KK3	1196	02254	LIMJ2	1195	02253
LK	1194	02252	L	1193	02251	NCASE	1192	02250	NRUN	1191	02247	PF	1190	02246
QQQQ	1189	02245	WW	1188	02244									

SYMBOLS AND LOCATIONS FOR SOURCE PROGRAM FORMAT STATEMENTS

	EFN	LOC		EFN	LOC		EFN	LOC		EFN	LOC		EFN	LOC
8)1	1	02233	8)2	2	02231	8)3	3	02135	8)4	4	02127	8)5	5	02227
8)6	6	02025	8)7	7	02225	8)8	8	02211	8)9	9	02167	8)C	12	02123
8)D	13	02072	8)E	14	02034	8)F	15	02142	8)G	16	02010	8)H	17	01767
8)I	18	01746	8)J	19	01753	8)L	21	01730	8)M	22	01712	8)5DJ	5555	01765
8)8LO	8888	01770												

LOCATIONS FOR OTHER SYMBOLS NOT APPEARING IN SOURCE PROGRAM

	DEC	OCT		DEC	OCT		DEC	OCT		DEC	OCT		DEC	OCT
1)	1180	02234	2)	948	01664	3)	958	01676	6)	960	01700	C)G0	1182	02236
C)G2	1183	02237	C)G3	1184	02240	C)G4	1185	02241	C)G7	1186	02242	C)100	1187	02243
D)10K	152	00230	D)214	248	00370	D)210	368	00560	D)22B	476	00734	D)310	367	00557
D)405	61	00075												

LOCATIONS OF NAMES IN TRANSFER VECTOR

	DEC	OCT		DEC	OCT		DEC	OCT		DEC	OCT		DEC	OCT
DETER	2	00002	(FIL)	4	00004	(RLR)	8	00010	(RTN)	1	00001	(RWT)	5	00005
(SLI)	7	00007	(STH)	3	00003	(TSB)	6	00006	(TSH)	0	00000			

SUBROUTINE FLOW

ENTRY POINTS TO SUBROUTINES NOT OUTPUT FROM LIBRARY

DETER (FIL) (RLR) (RTN) (RWT) (SLI) (STH) (TSB) (TSH)

EXTERNAL FORMULA NUMBERS WITH CORRESPONDING INTERNAL FORMULA NUMBERS AND OCTAL LOCATIONS

EFN	IFN	LOC	EFN	IFN	LOC	EFN	IFN	LOC	EFN	IFN	LOC	EFN	IFN	LOC
10	29	00043	20	38	00110	30	40	00113	40	41	00115	80	44	00133
115	48	00146	120	50	00154	130	65	00245	140	70	00306	150	72	00311
160	73	00313	170	74	00316	180	76	00321	190	77	00323	200	78	00337
205	79	00351	210	83	00403	220	85	00406	230	86	00410	270	89	00426
305	93	00441	310	97	00465	315	99	00505	320	100	00511	330	102	00522
340	113	00574	350	115	00577	360	116	00601	370	117	00605	380	119	00620
390	121	00625	400	126	00650	410	127	00660	420	130	00674	430	132	00701
440	134	00706	450	136	00714	451	137	00721	452	142	00735	460	143	00737
470	149	00771	480	154	01012	490	155	01016	500	182	01073	510	214	01161
520	215	01166	530	220	01201	540	222	01206	550	226	01232	555	230	01245
556	231	01250	560	233	01255	570	235	01270	580	242	01327	590	245	01346
600	246	01353	610	248	01356	620	249	01361	630	250	01364	640	252	01376
650	260	01417	660	266	01432	670	268	01456	680	275	01510	690	277	01514
700	279	01516	710	280	01523	720	282	01526	730	283	01531	740	284	01534
750	286	01546	760	294	01567	770	300	01602	780	302	01626	790	309	01660

F L O W

DIMENSION: H, HY, Q, AL, A, F, D, QQQ, FF, PQ, W, CSI, ETA, F, PPPP, KEY, MK, T, TT, QQ, HX
COMMON: KK, MM, DX, DY, H, HX, HY, K1, K2, K3, M1, M2, TRUNC, Q, LIMJ, W, CSI, ETA, IPREV, KEY, LITER, P

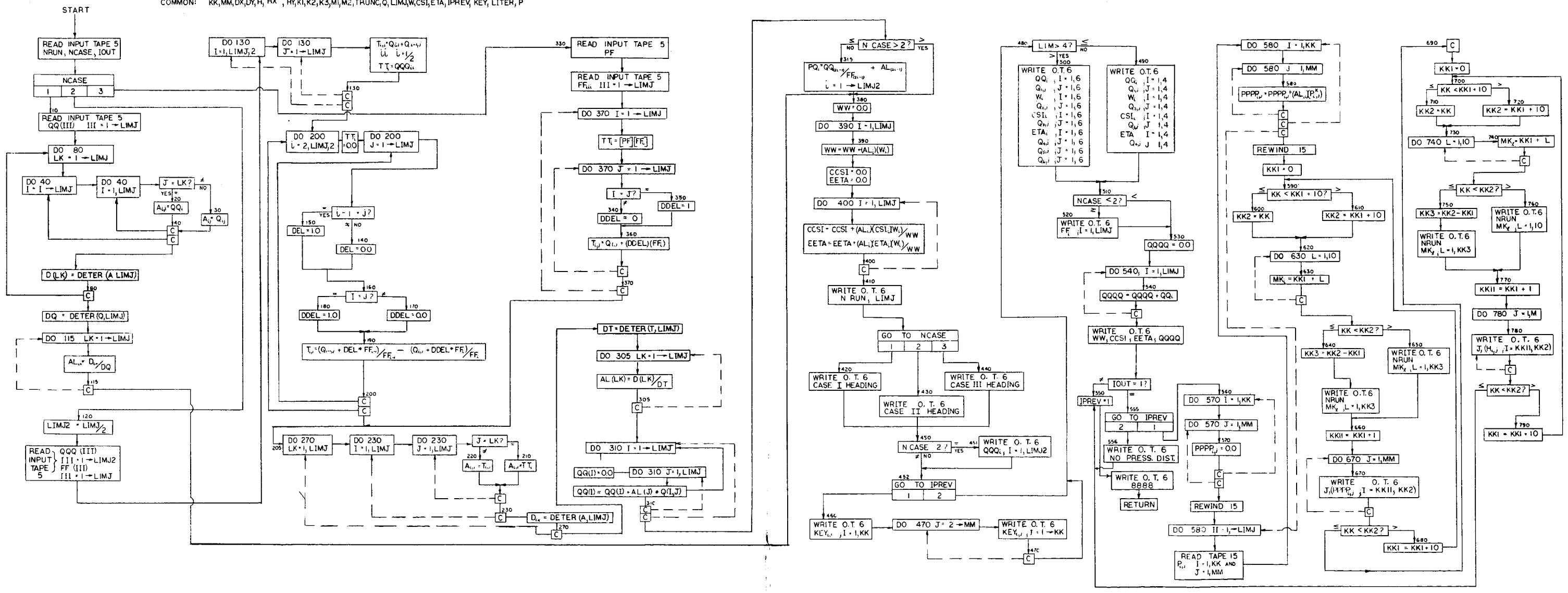

```
      SUBROUTINE REYN

      SUBROUTINE REYN
      DIMENSION H(67,45),HX(67,45),HY(67,45),A(21),PPP(67),P(67,45)
     1     ,PROG(300),KR(6), KRR(6), MR(6), MRR(6), Q(6,6) ,
     1W(6),CSI(6),ETA(6),KEY(67,45)
      COMMON KK, MM, DX, DY,    H, HX, HY,K1,K2,K3,M1,M2,TRUNC,Q,LIMJ
     1,W,CSI,ETA, IPREV, KEY, LITER, P
      READ INPUT TAPE 5,1,LITER,TRUNC
    1 FORMAT(I5,E16.8)
      ALPHA = (DX * DX) /(DY * DY )
      FACTOR = 1.0/(2.0*(1.0 + ALPHA))
      K = KK- 1
       M = MM-1
      NREL = K + M - K1 - K2 - M1 - M2 - 2
      FK = K
      FM = M
      NACT = (K-1)*(M-1)-(4*(K2+1)+ 2*(K3+1)) *(M2+1)
      PACT = NACT
      IF(K3) 10, 10, 20
   10 LIMJ = 4
      GO TO 30
   20 LIMJ = 6
   30 KR(1) = 2
      MR(1) = 2
      MR(3) = 2
      KRR(3) = K
      MRR(4) = M
      KR(4) =  2
      KRR(2) = K
      MRR(2) =  M
      IF (LIMJ-4) 50,50,40
   40 MR(5) = 2
      MRR(6) = M
   50 MR(4) = M/2+1
      MRR(1) = M/2+1
      MR(6) = M/2+1
      MRR(5) = M/2+1
      MR(2) = M/2+1
      MRR(3) = M/2+1
      REWIND 15
      IF (LIMJ -4)  60,60,70
   60 KRR(1) = K/2+1
      KR(3) = K/2 + 1
      KRR(4) = K/2+1
      KR(2) = K/2+1
      GO TO 75
   70 KKRC = (K-K3+2*K1+2*K2+4)/4
      KRR(1) = KKRC
      KRR(4) = KKRC
      KR (6) = KKRC
      KR (5) = KKRC
      KRR(5) = K - KKRC + 2
      KRR(6) = K - KKRC + 2
      KR (2) = K - KKRC + 2
      KR (3) = K - KKRC + 2
   75 DO 460 JJJ = 1, LIMJ
   77 GAMMA = 1.5
```

```
      SUBROUTINE REYN
   78 DO 140 I = 1,KK
      DO 140 J = 1,MM
      KEYIJ = KEY(I,J) +1
      GO TO ( 80, 90, 80), KEYIJ
   80 P(I,J) = 0.0
      GO TO 140
   90 IF (I-KR(JJJ)) 80,100, 100
  100 IF(I-KRR(JJJ)) 110,110,80
  110 IF (J - MR(JJJ))  80, 120, 120
  120 IF (J-MRR(JJJ)) 130, 130, 80
  130 P(I,J) = 1.0
  140  CONTINUE
      PGAMMA = 1.0 - GAMMA
  145 DO 220 ITER = 1, LITER
      PROG(ITER) = 0.0
      DO 146 I = 2,K
  146 PPP(I) = P (I,1)
      DO  170 J = 2,M
      DO 170 I = 2,K
      KEYIJ = KEY(I,J) + 1
      GO TO (150, 150, 160) , KEYIJ
  150 PP  = P(I,J)
      GO TO 165
  160 PPRIME=FACTOR*(P(I+1,J)+P(I-1,J)+(P(I+1,J)-P(I-1,J))*HX(I,J)+ALPHA
     1*(P(I,J+1)+P(I,J-1)+(P(I,J+1) - P(I,J-1))*HY(I,J)))
      PP = GAMMA * PPRIME + PGAMMA * P(I,J)
      PROG(ITER) = PROG(ITER) + PP
  165 P(I,J-1) = PPP(I)
      PPP(I) = PP
  170 CONTINUE
      DO 180 I = 2, K
  180 P(I,M) = PPP(I)
      IF (GAMMA-0.16) 181,181,185
  181 WRITE OUTPUT TAPE 6,3333,ITER
 3333 FORMAT (25H FORCED OUT AT ITERATION I4,21H, SOLUTION NOT VALID. )
      GO TO 235
  185 IF (ITER - 6) 220, 220, 190
  190 IF(PROG(ITER) -2.0*PROG(ITER-1)+PROG(ITER-2)) 210, 210, 200
  200 GAMMA = GAMMA *0.8
      WRITE OUTPUT TAPE 6,1111,JJJ,GAMMA,ITER
 1111 FORMAT (7H RECESS I3, 19H, GAMMA CHANGED TO  F10.4, 11H, ITERATION
     1 I5)
      GO TO 78
  210 IF (ITER - NREL) 220, 220, 215
  215 IF((PROG(ITER)-PROG(ITER-1))/PACT-TRUNC) 230, 230, 220
  220 CONTINUE
  230 WRITE OUTPUT TAPE 6,2222,JJJ,ITER
 2222 FORMAT (7H RECESS I3, 25H, CONVERGED AT ITERATION  I5)
  235 AAW=0.0
      AACSI = 0.0
      AAETA = 00.0
      J1 = 2
      J2 = M
      J3 = 2
  240 DO 310 J =J1,J2,J3
      AW = 0.0
```

```
      SUBROUTINE REYN

      ACSI = 0.0
      AETA = 0.0
      FJ = J-1
      I1 = 2
      I2 = K
      I3 = 2
  250 DO 260 I = I1, I2, I3
      FI = I-1
      AW = AW + P(I,J)
      ACSI = ACSI + FI*P(I,J)
  260 AETA = AETA + FJ*P(I,J)
      IF (I3 - K )  270, 300, 300
  270 AW = 2.0 * AW
      ACSI = 2.0 * ACSI
      AETA = 2.0 * AETA
      IF(I1-2) 280, 280, 290
  280 I1 = 3
      GO TO 250
  290 I1 = 1
      I2 = KK
      I3 =  K
       GO TO  250
  300 AAW = AAW + AW
      AACSI = AACSI + ACSI
  310   AAETA = AAETA + AETA
      IF (J3 - M) 320, 350, 350
  320 AAW = AAW * 2.0
      AACSI = AACSI * 2.0
      AAETA = AAETA * 2.0
      IF (J1-2)  330, 330, 340
  330 J1 = 3
      GO TO 240
  340 J1 = 1
      J2 = MM
      J3 = M
      GO TO 240
  350 W(JJJ) = AAW * DX * DY / 9.0
      CSI(JJJ) = AACSI * DX * DX * DY / (9.0*W(JJJ))
      ETA(JJJ) = AAETA * DX * DY * DY / (9.0*W(JJJ))
  360 DO 440 III = 1, LIMJ
      QQ = 0.0
      J = MR(III)
      I1=KR(III)
      I2=KRR(III)
  370 DO 380 I = I1, I2
  380 QQ=QQ-H(I,J)*H(I,J)*H(I,J)*(P(I,J+1) - P(I,J-1))
      QQ=QQ+0.5*(H(I1,J)*H(I1,J)*H(I1,J)*(P(I1,J+1)-P(I1,J-1))+(H(I2,J)*
     1H(I2,J)*H(I2,J)*(P(I2,J+1)-P(I2,J-1))))
      IF (J - MR(III)) 400, 390, 400
  390 QQ = -QQ
      J = MRR(III)
      GO TO 370
  400 TT = 0.0
      I = KR(III)
      J1=MR(III)
      J2=MRR(III)
```

```
      SUBROUTINE REYN
  410 DO 420 J = J1, J2
  420  TT=TT-H(I,J)*H(I,J)*H(I,J)*(P(I+1,J) - P(I-1,J))
      TT=TT+0.5*(H(I,J1) *H(I,J1)*H(I,J1)*(P(I+1,J1)- P(I-1,J1))+H(I,J2)
     1*H(I,J2)*H(I,J2)*(P(I+1,J2)-P(I-1,J2)))
      IF (I - KR(III)) 440, 430, 440
  430 TT = -TT
      I = KRR(III)
      GO TO 410
  440 Q(III,JJJ) = QQ*DX*0.5/DY+TT*DY*0.5/DX
  450 WRITE TAPE 15,P
    2 FORMAT (8E15.8)
  460 CONTINUE
      END FILE 15
      REWIND 15
      RETURN
      END(1,0,0,0,0,0,0,0,0,1,0,0,0,0,0)
```

SUBROUTINE REYN

STORAGE NOT USED BY PROGRAM

DEC	OCT	DEC	OCT
1523	02763	17419	42013

STORAGE LOCATIONS FOR VARIABLES APPEARING IN COMMON STATEMENTS

	DEC	OCT		DEC	OCT		DEC	OCT		DEC	OCT		DEC	OCT
CSI	23463	55647	DX	32559	77457	DY	32558	77456	ETA	23457	55641	H	32557	77455
HX	29542	71546	HY	26527	63637	IPREV	23451	55633	K1	23512	55730	K2	23511	55727
K3	23510	55726	KEY	23450	55632	KK	32561	77461	LIMJ	23470	55656	LITER	20435	47723
M1	23509	55725	M2	23508	55724	MM	32560	77460	P	20434	47722	Q	23506	55722
TRUNC	23507	55723	W	23469	55655									

STORAGE LOCATIONS FOR VARIABLES APPEARING IN DIMENSION AND EQUIVALENCE STATEMENTS

	DEC	OCT		DEC	OCT		DEC	OCT		DEC	OCT		DEC	OCT
A	1522	02762	KRR	1128	02150	KR	1134	02156	MRR	1116	02134	MR	1122	02142
PPP	1501	02735	PROG	1434	02632									

STORAGE LOCATIONS FOR VARIABLES NOT APPEARING IN COMMON, DIMENSION, OR EQUIVALENCE STATEMENT

	DEC	OCT		DEC	OCT		DEC	OCT		DEC	OCT		DEC	OCT
AACSI	1110	02126	AAETA	1109	02125	AAW	1108	02124	ACSI	1107	02123	AETA	1106	02122
ALPHA	1105	02121	AW	1104	02120	FACTOR	1103	02117	FI	1102	02116	FJ	1101	02115
FK	1100	02114	FM	1099	02113	GAMMA	1098	02112	I1	1097	02111	I2	1096	02110
I3	1095	02107	I	1094	02106	ITER	1093	02105	J1	1092	02104	J2	1091	02103
J3	1090	02102	JJJ	1089	02101	J	1088	02100	KEYIJ	1087	02077	KKRC	1086	02076
K	1085	02075	M	1084	02074	NACT	1083	02073	NREL	1082	02072	PACT	1081	02071
PGAMMA	1080	02070	PPRIME	1079	02067	PP	1078	02066	QQ	1077	02065	TT	1076	02064

SYMBOLS AND LOCATIONS FOR SOURCE PROGRAM FORMAT STATEMENTS

	EFN	LOC		EFN	LOC		EFN	LOC		EFN	LOC		EFN	LOC
8)1	1	02036	8)2	2	01777	8)12N	1111	02022	8)25E	2222	02007	8)385	3333	02034

LOCATIONS FOR OTHER SYMBOLS NOT APPEARING IN SOURCE PROGRAM

	DEC	OCT		DEC	OCT		DEC	OCT		DEC	OCT		DEC	OCT
1)	1055	02037	2)	999	01747	3)	1008	01760	6)	1016	01770	A)103	947	01663
A)104	960	01700	A)105	973	01715	A)106	986	01732	C)G1	1063	02047	C)G2	1064	02050
C)G3	1065	02051	C)G5	1066	02052	C)100	1067	02053	C)103	1068	02054	C)104	1069	02055
C)105	1070	02056	C)106	1071	02057	C)107	1072	02060	C)203	1073	02061	C)204	1074	02062
C)205	1075	02063	D)11C	551	01047	D)20A	276	00424	D)20B	289	00441	D)20T	423	00647
D)218	513	01001	D)409	272	00420	D)40D	304	00460	D)40M	354	00542	D)424	901	01605
D)60M	353	00541	E)E	308	00464	E)F	315	00473	E)S	389	00605	E)U	431	00657

LOCATIONS OF NAMES IN TRANSFER VECTOR

	DEC	OCT		DEC	OCT		DEC	OCT		DEC	OCT		DEC	OCT
(EFT)	8	00010	(FIL)	4	00004	(RTN)	1	00001	(RWT)	2	00002	(SLO)	6	00006
(STB)	5	00005	(STH)	3	00003	(TSH)	0	00000	(WLR)	7	00007			

SUBROUTINE REYN

ENTRY POINTS TO SUBROUTINES NOT OUTPUT FROM LIBRARY

(EFT) (FIL) (RTN) (RWT) (SLO) (STB) (STH) (TSH) (WLR)

EXTERNAL FORMULA NUMBERS WITH CORRESPONDING INTERNAL FORMULA NUMBERS AND OCTAL LOCATIONS

EFN	IFN	LOC	EFN	IFN	LOC	EFN	IFN	LOC	EFN	IFN	LOC	EFN	IFN	LOC
10	22	00151	20	24	00154	30	25	00156	40	34	00203	50	36	00207
60	44	00275	70	49	00336	75	58	00406	77	59	00421	78	60	00425
80	64	00461	90	66	00465	100	67	00474	110	68	00500	120	69	00505
130	70	00511	140	71	00514	145	73	00533	146	76	00551	150	81	00602
160	83	00607	165	86	00650	170	88	00654	180	90	00700	181	92	00711
185	95	00724	190	96	00731	200	97	00742	210	101	00764	215	102	00771
220	103	01002	230	104	01006	235	106	01022	240	112	01050	250	120	01102
260	124	01141	270	126	01155	280	130	01172	290	132	01175	300	136	01204
310	138	01212	320	140	01224	330	144	01241	340	146	01246	350	150	01261
360	153	01313	370	158	01347	380	159	01363	390	162	01437	400	165	01452
410	169	01502	420	170	01516	430	173	01572	440	176	01606	450	177	01630
460	179	01640												

REYN

DIMENSION: H, HX, HY, A, PPP, P, PROG, KR, KRR, MR, MRR, Q, W, CSI, ETA, KEY
COMMON: KK, MM, DX, DY, H, HX, HY, K1, K2, K3, M1, M2, TRUNC, Q, LIMJ, W, CSI, ETA, IPREV, KEY, LITER, P

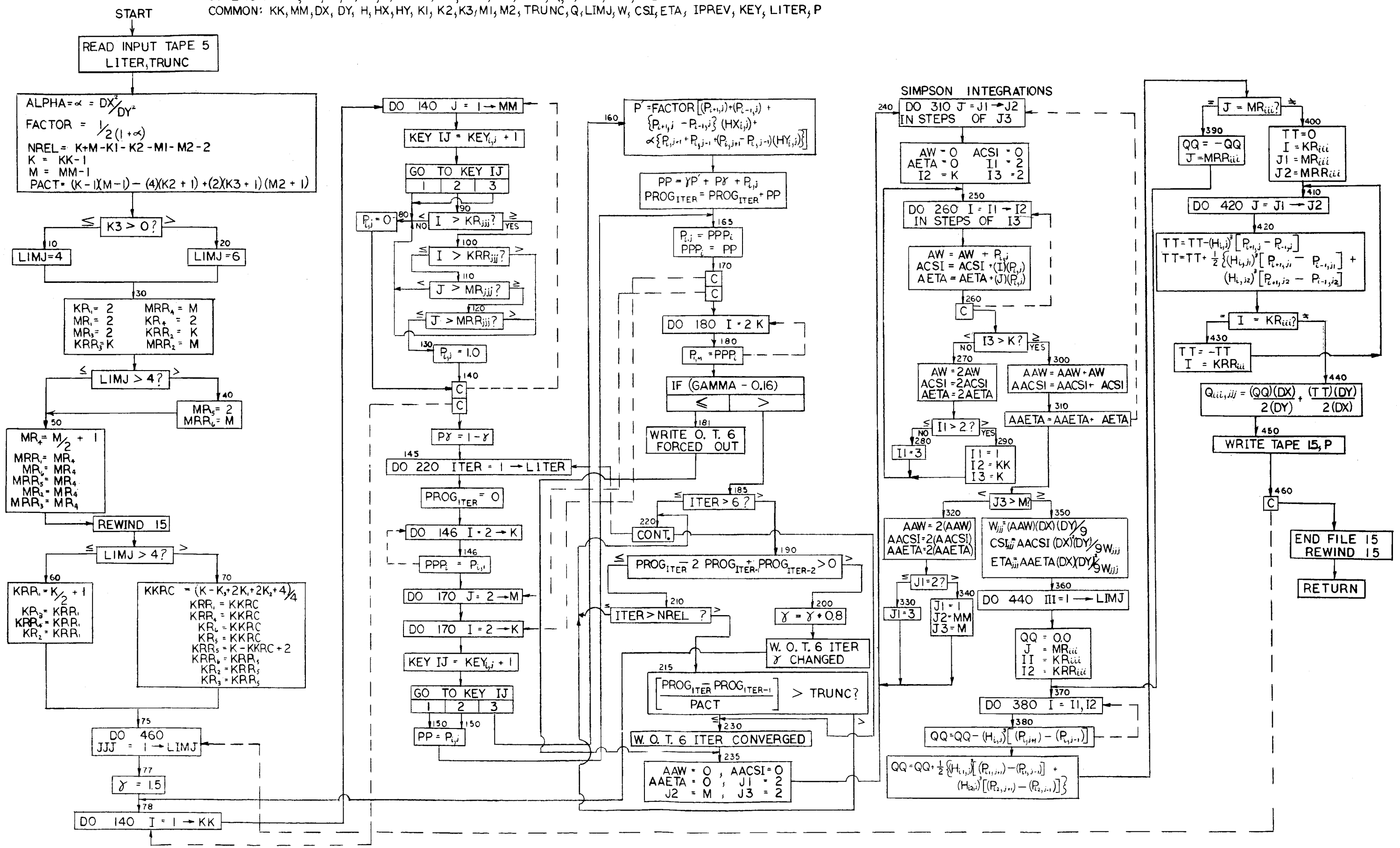

```
      SUBROUTINE  FORMH

      SUBROUTINE  FORMH
      DIMENSION H(67,45),HX(67,45),HY(67,45),A(23),KEY(67,45),
     1 Q(6,6), W(6), CSI(6), ETA(6)
      COMMON KK,MM,DX,DY,                H,HX,HY,K1,K2,K3,M1,M2,TRUNC ,
     1 Q, LIMJ, W, CSI, ETA, IPREV, KEY, LITER
    1 FORMAT(9I3,E16.8)
      READ INPUT TAPE 5,1,K,M,INDEX1,INDEX2,K1,K2,K3,M1,M2,AL
      KK = K + 1
      MM = M + 1
      FK = K
      FM = M
      DX = 1.0/FK
      DY = AL/FM
      FX = 0.5/DX
      FY = 0.5/DY
      DO 11  J = 2,M
      KEY(1,J) = 0
      KEY(KK,J)  = 0
      DO 11  I = 2, K
   11 KEY(I,J) = 1
      DO 21  I = 1, KK
      KEY(I,1) = 0
   21 KEY(I,MM) = 0
      KK1 = K1 + K2 + 2
      KK2 = (K - K3)/2
      DO 51  J = 2, M
      DO 31  I = 2, K1
      II = K + 2 - I
      KEY(I,J) = 2
   31 KEY(II,J) = 2
      DO 41  I = KK1, KK2
      II = K + 2 - I
      KEY(I,J)  =  2
   41 KEY(II,J) = 2
      IF (K3) 42,42,51
   42 II = K/2 + 1
      KEY(II,J) = 2
   51 CONTINUE
      MM2 = M - M1 - M2
      MM1 = M1 + M2 + 2
      DO 81  I = 2, K
      DO  61  J = 2, M1
      JJ = M + 2 - J
      KEY(I,J) = 2
   61 KEY(I,JJ) = 2
      DO  71  J = MM1, MM2
   71 KEY(I,J)  =  2
   81  CONTINUE
      IPREV = 1
    2 FORMAT (6E11.8)
      IF(INDEX1 - 1)  30, 20, 30
   20 READ INPUT TAPE 5,2,((H(I,J),I=1,KK),J=1,MM)
      DO 25 I = 2, K
      DO 25 J =  2, M
       HX(I,J) = (H(I+1,J)-H(I-1,J))*.75/H(I,J)
   25 HY(I,J) = (H(I,J+1)-H(I,J-1))*.75/H(I,J)
```

```
      SUBROUTINE  FORMH
    3 FORMAT (5E14.8)
      GO TO 60
   30 READ INPUT TAPE 5,3,A
      CON=EXPF(-.5*A(21))*COSF(A(21)*.5)*2.0
      DO 50  I = 1,KK
      FI = I
      X=(FI-1.0)*DX
      S = (FI - 1.0) * DX  -A(22)
      SS = S * S
      SSS = SS * S
      DO 50  J = 1, MM
      FJ  =  J
      T = (FJ - 1.0) * DY  -A(23)
      TT = T * T
      TTT = TT * T
      H(I,J)=A(1)+A(2)*S+A(3)*T+A(4)*SS+A(5)*TT+A(6)*S*T+A(7)*SSS+A(8)*
     1TTT+A(9)*SS*T+A(10)*S*TT+A(11)*SQRTF(A(12)+A(13)*SS+A(14)*TT)+
     1 A(15)*COSF(A(16)*S)+A(17)*COSF(A(18)*T)+A(19)*COSF(A(16)*S)*COSF(
     1A(18)*T)-A(20)*(EXPF(-A(21)*X)*COSF(A(21)*X)+EXPF(-A(21)*(1.-X))*
     1COSF (A(21)*(1.-X))-CON)
      HX(I,J) = (A(2)+2.*A(4)*S+A(6)*T+3.*A(7)*SS+2.*A(9)*S*T+A(10)*TT-
     1A(16)*SINF(A(16)*S)*(A(15)+A(19)*COSF(A(18)*T)))*1.5*DX/H(I,J)
     1+A(20)*A(21)*(EXPF(-A(21)*X)*(COSF(A(21)*X)+SINF(A(21)*X))-EXPF(-A
     1(21)*(1.-X))*(COSF(A(21)*(1.-X))+SINF(A(21)*(1.-X))))*1.5*DX/H(I,J
     1)
      HY(I,J)=(A(3)+2.*A(5)*T+A(6)*S+3.*A(8)*TT+A(9)*SS-A(18)*SINF(A(18)
     1*T)*(A(17)+A(19)*COSF(A(16)*S)))*1.5*DY/H(I,J)
      SL = A(12)+A(13)*SS+A(14)*TT
      IF (SL) 50, 50, 40
   40 SLL = A(11)/SQRTF(SL)
      HX(I,J) = HX(I,J)+SLL*A(13)*S*1.5*DX/H(I,J)
      HY(I,J) = HY(I,J) + SLL*A(14)*T*1.5*DY/H(I,J)
   50 CONTINUE
   60 IF (INDEX2 - 1)  80, 70, 80
   70 CALL TILTH
   80 RETURN
      END(1,0,0,0,0,0,0,0,0,1,0,0,0,0,0)
```

SUBROUTINE FORMH

STORAGE NOT USED BY PROGRAM

DEC	OCT	DEC	OCT
954	01672	20434	47722

STORAGE LOCATIONS FOR VARIABLES APPEARING IN COMMON STATEMENTS

	DEC	OCT		DEC	OCT		DEC	OCT		DEC	OCT		DEC	OCT
CSI	23463	55647	DX	32559	77457	DY	32558	77456	ETA	23457	55641	H	32557	77455
HX	29542	71546	HY	26527	63637	IPREV	23451	55633	K1	23512	55730	K2	23511	55727
K3	23510	55726	KEY	23450	55632	KK	32561	77461	LIMJ	23470	55656	LITER	20435	47723
M1	23509	55725	M2	23508	55724	MM	32560	77460	Q	23506	55722	TRUNC	23507	55723
W	23469	55655												

STORAGE LOCATIONS FOR VARIABLES APPEARING IN DIMENSION AND EQUIVALENCE STATEMENTS

	DEC	OCT		DEC	OCT		DEC	OCT		DEC	OCT		DEC	OCT
A	953	01671												

STORAGE LOCATIONS FOR VARIABLES NOT APPEARING IN COMMON, DIMENSION, OR EQUIVALENCE STATEMENT

	DEC	OCT		DEC	OCT		DEC	OCT		DEC	OCT		DEC	OCT
AL	930	01642	CON	929	01641	FI	928	01640	FJ	927	01637	FK	926	01636
FM	925	01635	FX	924	01634	FY	923	01633	II	922	01632	INDEX1	921	01631
INDEX2	920	01630	I	919	01627	JJ	918	01626	J	917	01625	KK1	916	01624
KK2	915	01623	K	914	01622	MM1	913	01621	MM2	912	01620	M	911	01617
SLL	910	01616	SL	909	01615	S	908	01614	SS	907	01613	SSS	906	01612
T	905	01611	TT	904	01610	TTT	903	01607	X	902	01606			

SYMBOLS AND LOCATIONS FOR SOURCE PROGRAM FORMAT STATEMENTS

	EFN	LOC		EFN	LOC		EFN	LOC		EFN	LOC		EFN	LOC
8)1	1	01540	8)2	2	01536	8)3	3	01534						

LOCATIONS FOR OTHER SYMBOLS NOT APPEARING IN SOURCE PROGRAM

	DEC	OCT		DEC	OCT		DEC	OCT		DEC	OCT		DEC	OCT
1)	865	01541	2)	840	01510	3)	847	01517	6)	853	01525	A)105	814	01456
A)106	827	01473	C)100	892	01574	C)101	893	01575	C)102	894	01576	C)105	895	01577
C)106	896	01600	C)200	897	01601	C)201	898	01602	C)203	899	01603	C)206	900	01604
C)208	901	01605	D)10I	317	00475	D)40A	195	00303	D)40V	434	00662	D)50V	433	00661
D)60A	194	00302	E)C	216	00330									

LOCATIONS OF NAMES IN TRANSFER VECTOR

	DEC	OCT		DEC	OCT		DEC	OCT		DEC	OCT		DEC	OCT
COS	3	00003	EXP	4	00004	SIN	6	00006	SQRT	5	00005	TILTH	7	00007
(RTN)	1	00001	(SLI)	2	00002	(TSH)	0	00000						

ENTRY POINTS TO SUBROUTINES NOT OUTPUT FROM LIBRARY

COS EXP SIN SQRT TILTH (RTN) (SLI) (TSH)

SUBROUTINE FORMH

EXTERNAL FORMULA NUMBERS WITH CORRESPONDING INTERNAL FORMULA NUMBERS AND OCTAL LOCATIONS

EFN	IFN	LOC	EFN	IFN	LOC	EFN	IFN	LOC	EFN	IFN	LOC	EFN	IFN	LOC
11	22	00142	21	25	00173	31	32	00264	41	36	00316	42	38	00331
51	40	00345	61	47	00466	71	49	00476	81	50	00503	20	53	00525
25	63	00605	30	65	00620	40	84	01377	50	87	01433	60	88	01444
70	89	01451	80	90	01452									

FORMH

DIMENSION: H, HX, HY, A, KEY, Q, W, CSI, ETA
COMMON: KK, MM, DX, DY, H, HX, HY, K1, K2, K3, M1, M2, TRUNC, Q, LIMJ, W, CSI, ETA, IPREV, KEY, LITER

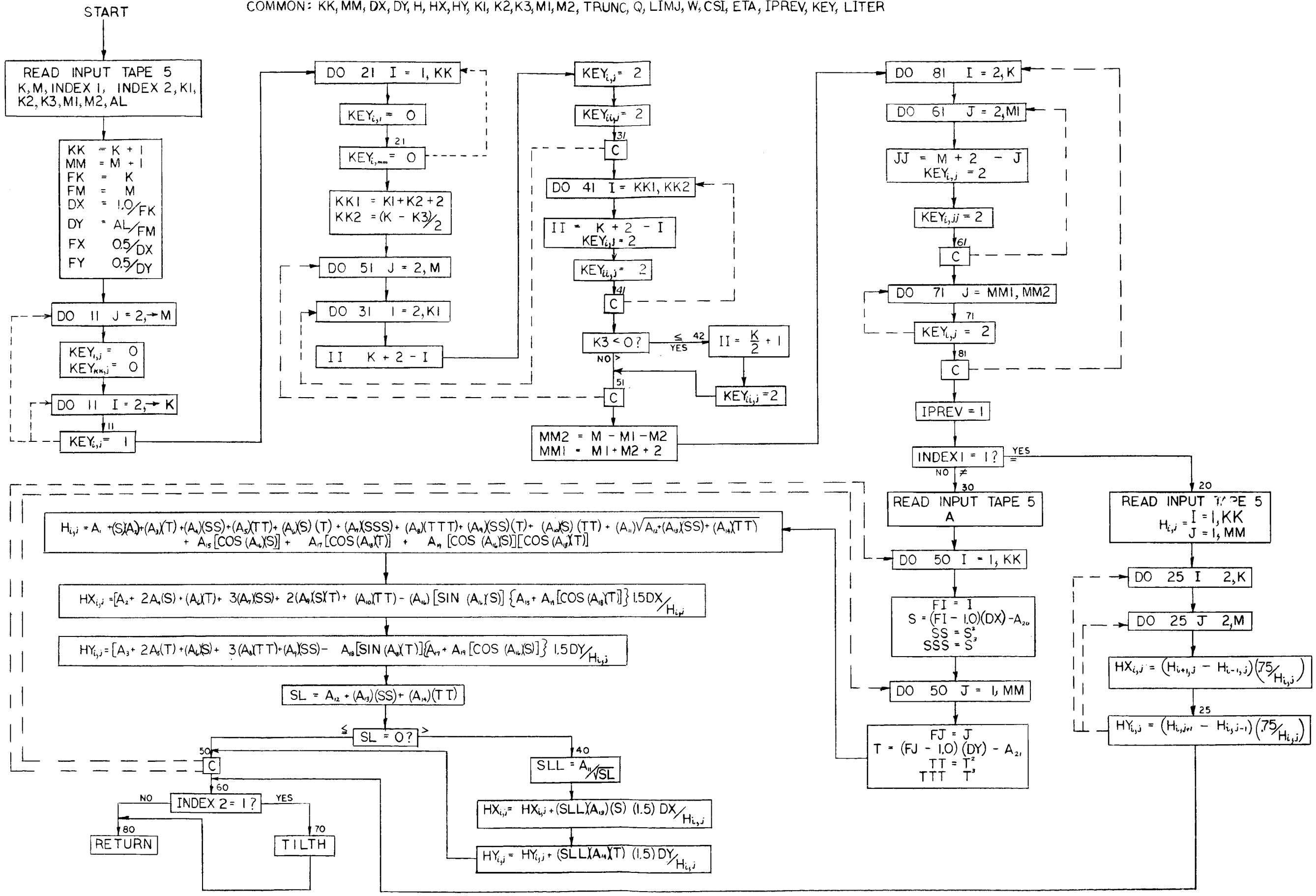

```
      SUBROUTINE  TILTH

      SUBROUTINE  TILTH
      DIMENSION H(67,45),HX(67,45),HY(67,45)
      COMMON KK,MM, DX, DY,                    H,HX,HY
      READ INPUT TAPE 5,1,X1,Y1,TX,TY
    1 FORMAT (4E15.8   )
      DO 90 I = 1, KK
      FI = I
      X = (FI - 1.0)* DX - X1
      DO 90  J = 1, MM
      FJ = J
      H(I,J) = H(I,J)+TX*X+TY*((FJ-1.)*DY-Y1)
      HX(I,J) = HX(I,J) + TX * 1.5 * DX / H(I,J)
      HY(I,J) = HY(I,J) + TY * 1.5 * DY / H(I,J)
   90 CONTINUE
      RETURN
      END(1,0,0,0,0,0,0,0,0,1,0,0,0,0,0)
```

SUBROUTINE TILTH

STORAGE NOT USED BY PROGRAM

DEC	OCT	DEC	OCT
119	00167	23512	55730

STORAGE LOCATIONS FOR VARIABLES APPEARING IN COMMON STATEMENTS

	DEC	OCT		DEC	OCT		DEC	OCT		DEC	OCT		DEC	OCT
DX	32559	77457	DY	32558	77456	H	32557	77455	HX	29542	71546	HY	26527	63637
KK	32561	77461	MM	32560	77460									

STORAGE LOCATIONS FOR VARIABLES NOT APPEARING IN COMMON, DIMENSION, OR EQUIVALENCE STATEMENT

	DEC	OCT		DEC	OCT		DEC	OCT		DEC	OCT		DEC	OCT
FI	118	00166	FJ	117	00165	I	116	00164	J	115	00163	TX	114	00162
TY	113	00161	X1	112	00160	X	111	00157	Y1	110	00156			

SYMBOLS AND LOCATIONS FOR SOURCE PROGRAM FORMAT STATEMENTS

	EFN	LOC		EFN	LOC		EFN	LOC		EFN	LOC		EFN	LOC
8)1	1	00151												

LOCATIONS FOR OTHER SYMBOLS NOT APPEARING IN SOURCE PROGRAM

	DEC	OCT		DEC	OCT		DEC	OCT		DEC	OCT		DEC	OCT
1)	106	00152	2)	93	00135	3)	96	00140	6)	98	00142			

LOCATIONS OF NAMES IN TRANSFER VECTOR

	DEC	OCT		DEC	OCT		DEC	OCT		DEC	OCT		DEC	OCT
(RTN)	1	00001	(TSH)	0	00000									

ENTRY POINTS TO SUBROUTINES NOT OUTPUT FROM LIBRARY

(RTN) (TSH)

EXTERNAL FORMULA NUMBERS WITH CORRESPONDING INTERNAL FORMULA NUMBERS AND OCTAL LOCATIONS

EFN	IFN	LOC	EFN	IFN	LOC	EFN	IFN	LOC	EFN	IFN	LOC	EFN	IFN	LOC
90	16	00120												

TILTH

JPL VARIABLE FILM HYDROSTATIC BEARING PROGRAM -- BLOCK DIAGRAM

DIMENSION : H, HX, HY

COMMON : KK, MM, DX, DY, H, HX, HY

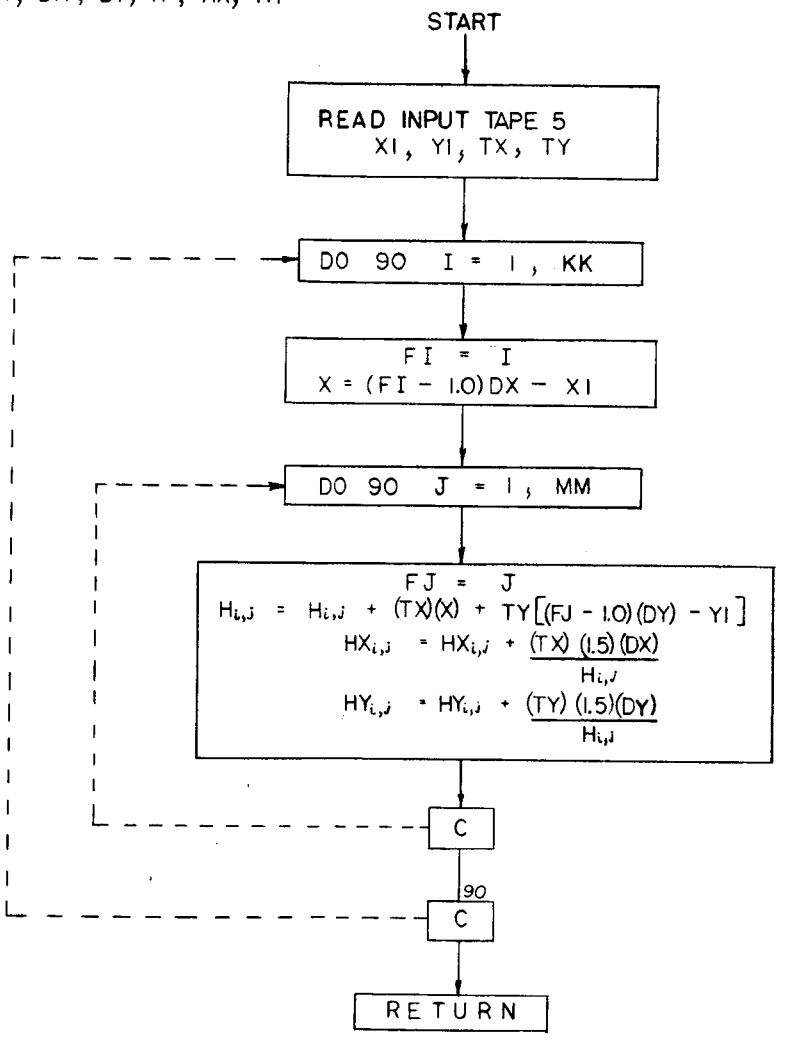

```
      FUNCTION DETER(A,LIMJ)

      FUNCTION DETER(A,LIMJ)
      DIMENSION A(6,6)
       DETER = 0.0
      IF (LIMJ/2 - 2) 100, 100, 110
  100 SIGN =  1.0
      GO TO 1
  110 SIGN = -1.0
    1 DO 13 I = 1,LIMJ
    2 DO 12 J = 1,LIMJ
      CONTINUE
      IF (I-J) 21, 12, 21
   21 SIGN = -SIGN
    3 DO 11 K = 1,LIMJ
      IF(I-K) 31, 11, 31
   31 IF(J-K) 4, 11, 4
    4 DO 10 L = 1,LIMJ
      IF(I-L) 41, 10, 41
   41 IF(J-L) 42, 10, 42
   42 IF(K-L) 43, 10, 43
   43 PROD =  A(1,I)*A(2,J)*A(3,K)*A(4,L)
      SIGN = -SIGN
      IF (LIMJ-4)44,44,5
   44 DETER = DETER + PROD *SIGN
      GO TO 10
    5 DO 9 M= 1,LIMJ
      IF (I-M) 51, 9, 51
   51 IF (J-M) 52, 9, 52
   52 IF(K-M) 53, 9, 53
   53 IF(L-M) 6, 9, 6
    6 DO 8 N = 1,LIMJ
      IF(I-N) 61, 8, 61
   61 IF(J-N) 62, 8, 62
   62 IF(K-N) 63, 8, 63
   63 IF(L-N)  64, 8, 64
   64 IF(M-N)7,8,7
    7 PRODD= -PROD * A(5,M) * A(6,N) * SIGN
      SIGN = -SIGN
      DETER = DETER + PRODD
    8 CONTINUE
    9 CONTINUE
   10 CONTINUE
   11 CONTINUE
   12 CONTINUE
   13 CONTINUE
      RETURN
      END(1,0,0,0,0,0,0,0,0,1,0,0,0,0,0)
```

FUNCTION DETER(A,LIMJ)

STORAGE NOT USED BY PROGRAM

DEC	OCT	DEC	OCT
264	00410	32561	77461

STORAGE LOCATIONS FOR VARIABLES NOT APPEARING IN COMMON, DIMENSION, OR EQUIVALENCE STATEMENT

	DEC	OCT		DEC	OCT		DEC	OCT		DEC	OCT		DEC	OCT
DETER	263	00407	I	262	00406	J	261	00405	K	260	00404	L	259	00403
M	258	00402	N	257	00401	PRODD	256	00400	PROD	255	00377	SIGN	254	00376

LOCATIONS FOR OTHER SYMBOLS NOT APPEARING IN SOURCE PROGRAM

	DEC	OCT		DEC	OCT		DEC	OCT		DEC	OCT		DEC	OCT
2)	227	00343	3)	230	00346	6)	232	00350	9)	238	00356	C)100	242	00362
C)101	243	00363	C)102	244	00364	C)103	245	00365	C)104	246	00366	C)105	247	00367
C)200	248	00370	C)201	249	00371	C)202	250	00372	C)203	251	00373	C)204	252	00374
C)205	253	00375	D)105	63	00077	D)107	77	00115	D)20T	185	00271	D)30T	184	00270
D)40V	193	00301	D)60V	192	00300	E)C	96	00140	E)H	131	00203	E)R	176	00260
E)S	183	00267	E)T	187	00273	E)11	199	00307	E)10R	176	00260	E)10T	187	00273
E)111	199	00307	E)20R	176	00260	E)30T	187	00273						

EXTERNAL FORMULA NUMBERS WITH CORRESPONDING INTERNAL FORMULA NUMBERS AND OCTAL LOCATIONS

EFN	IFN	LOC	EFN	IFN	LOC	EFN	IFN	LOC	EFN	IFN	LOC	EFN	IFN	LOC
100	6	00052	110	8	00055	1	9	00057	2	10	00067	21	13	00103
3	14	00105	31	16	00121	4	17	00124	41	19	00135	42	20	00143
43	21	00146	44	24	00165	5	26	00172	51	28	00204	52	29	00207
53	30	00212	6	31	00215	61	33	00226	62	34	00231	63	35	00234
64	36	00237	7	37	00242	8	40	00263	9	41	00274	10	42	00302
11	43	00310	12	44	00316	13	45	00326						

FUNCTION DETER

DIMENSION: A

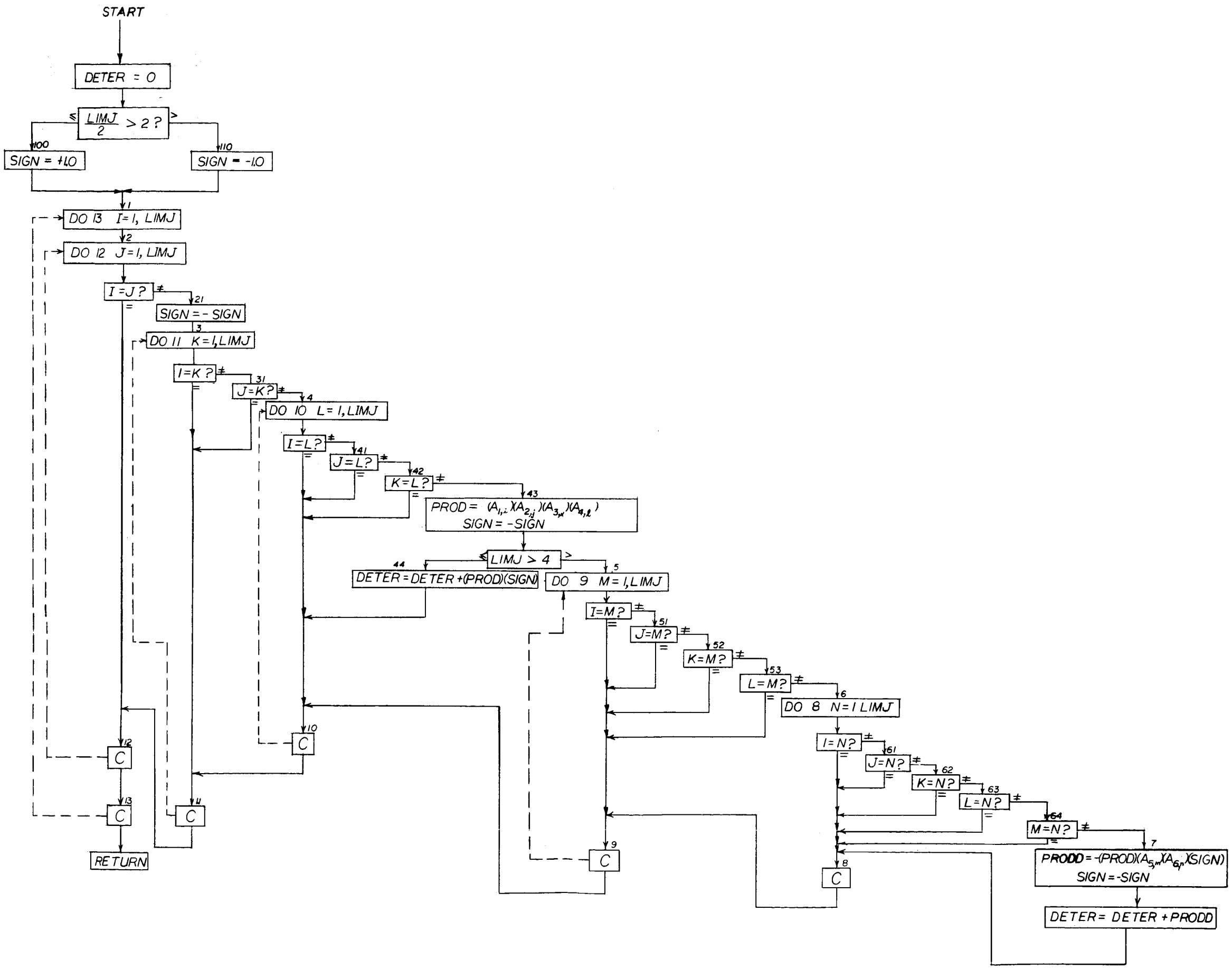

APPENDIX II

IBM 7090 LOADING RECORD

(Six Subprograms)

• XEQ

ENTRY POINTS TO SUBROUTINES REQUESTED FROM LIBRARY.

(FPT)	(RWT)	(TSHM)	(RTN)	EXIT	(STHM)	(FIL)	(TSB)	(SLI)	(RLR)
(STB)	(SLO)	(WLR)	(EFT)	COS	SQRT	SIN			

ENTRY NAME	ENTRY ADD.	NO. OF TRANSFERS	LOAD ADD.
MAIN	00155	00011	00144
FLOW	00333	00011	00316
REYN	10774	00011	10757
TILTH	13750	00002	13742
FORMH	14144	00007	14131
DETER	15632	00000	15626
ERRDMP	16237	00001	16236
EXIT	16242		
(TES)	16264	00000	16264
(FPT)	16265	00000	16265
SIN	16324	00000	16323
COS	16323		
SQRT	16474	00000	16474
(RLR)	16635	00011	16550
(TSB)	16561		
(WLR)	16703	00007	16652
(STB)	16661		
(TSHM)	16750	00006	16737
(TSH)	16745		
(STHD)	17015	00006	16774
(STHM)	17005		
(STH)	17002		
(EFT)	17126	00002	17124
(RWT)	17135	00002	17133
(SLI)	17156	00000	17156
(SLO)	17173	00000	17173
(RDC)	17241	00007	17210
(RER)	17217		
(WTC)	17320	00012	17255
(WER)	17267		
(SET)	17425	00001	17350
(BUF)	17427		
(EXB)	17432		
(IOB)	17351		
(RTN)	22205	00002	20442
(FIL)	22174		
(IOH)	20444		
(TCO)	22453	00003	22361
(TEF)	22452		
(RCH)	22451		
(ETT)	22450		
(REW)	22447		
(WEF)	22446		
(BSR)	22445		
(WRS)	22444		
(RDS)	22443		
(IOS)	22364		
(TRC)	22454		
)PRNT(	22747	00002	22510
(EXEM)	22512		
(IOU)	23323	00000	23320

LOGICAL TAPE	MACHINE TAPE	TOTAL WRITES	TOTAL READS	NOISE RECORDS WRITING	NOISE RECORDS READING	TOTAL REDUNDANCIES WRITING	TOTAL REDUNDANCIES READING	POSITIONING ERRORS
1	A 1	0	379	0	0	0	0	0
5	A 2	0	188	0	0	0	0	0
6	A 3	76	0	0	0	0	0	0
7	B 4	6	9	0	0	0	0	0

APPENDIX III

INPUT GUIDE CHART

INPUT GUIDE CHART

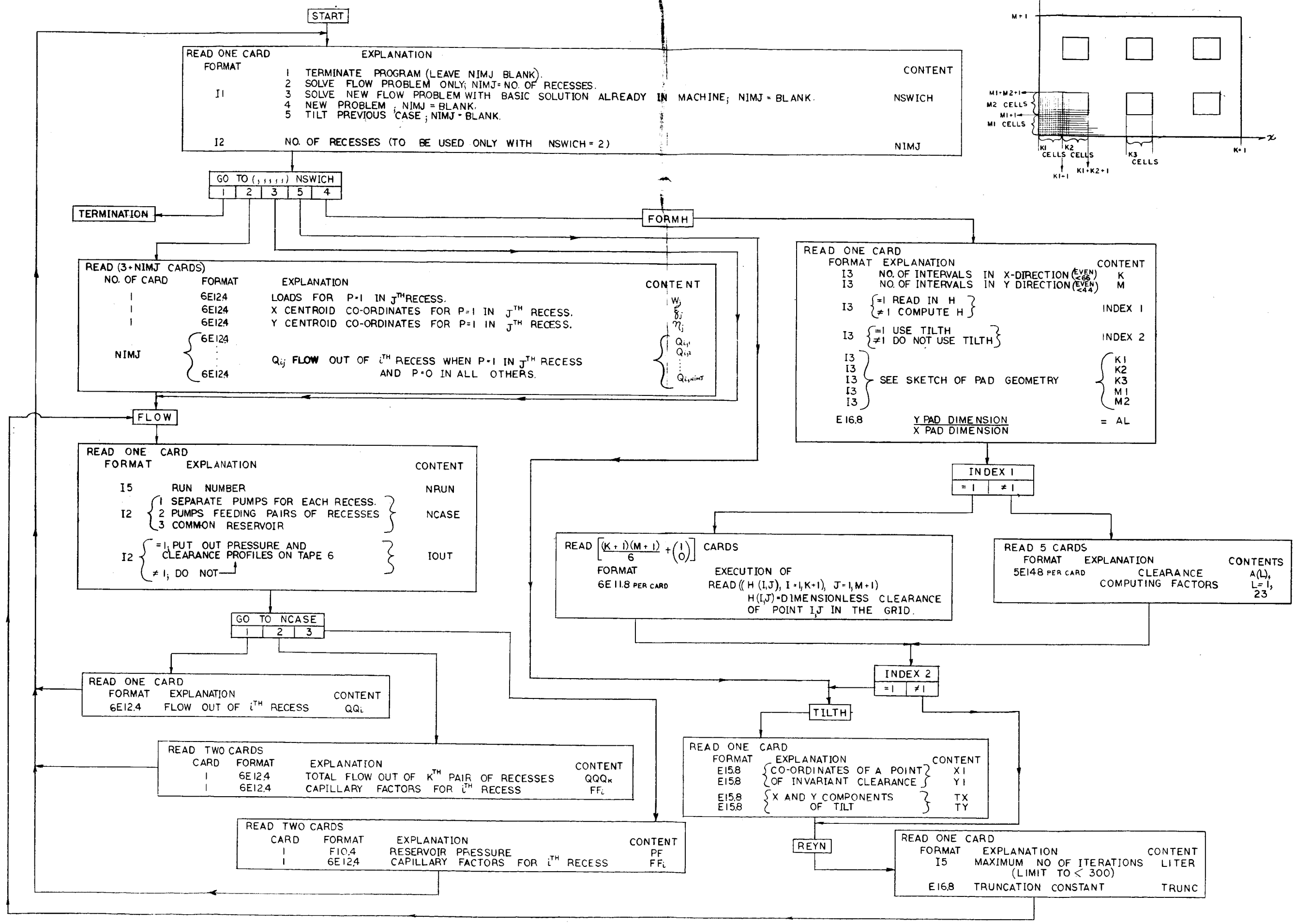

APPENDIX IV

SAMPLE PROBLEM INPUT DATA

AND

OUTPUT RESULTS

SAMPLE PROBLEM INPUT

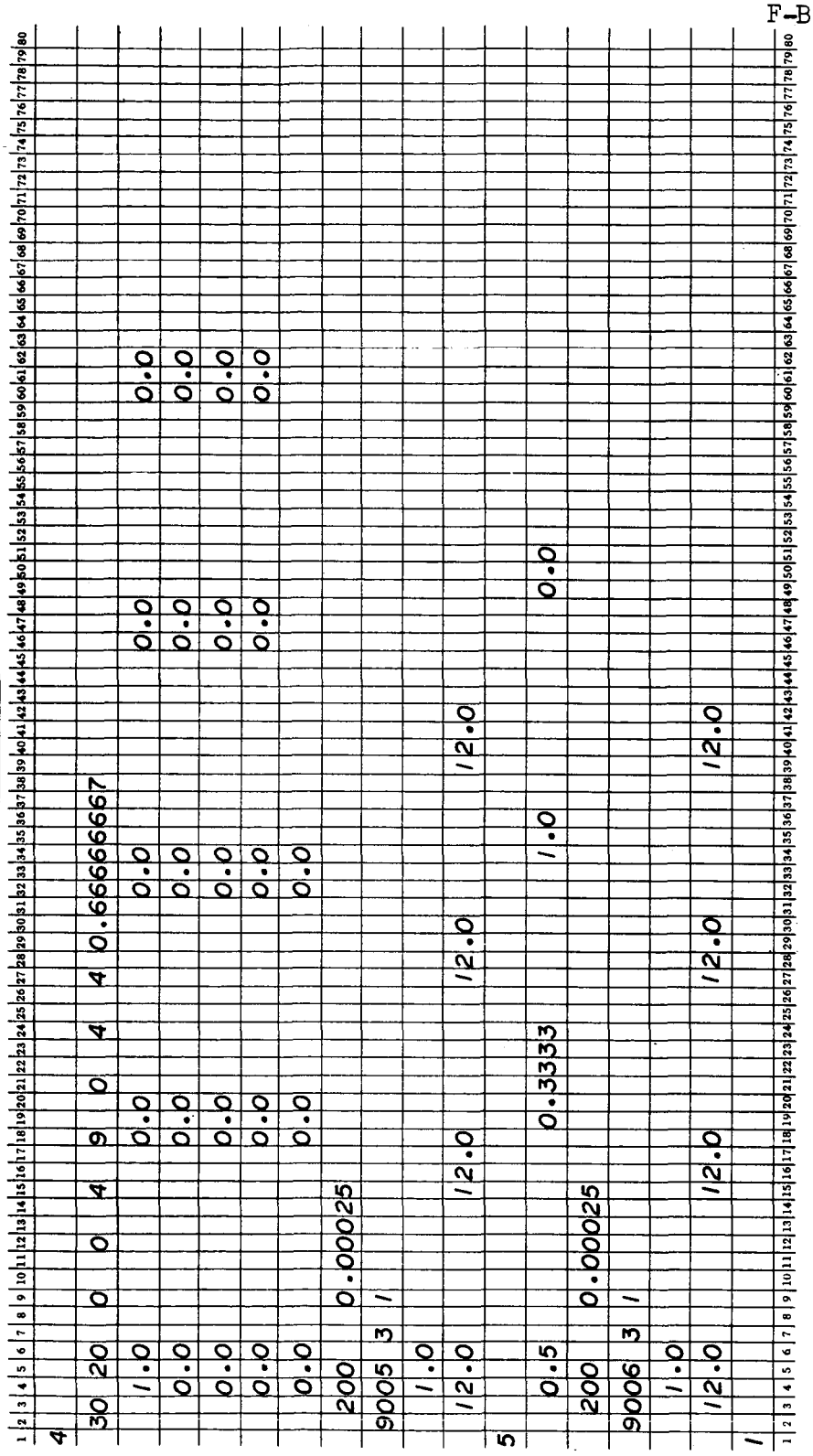

```
RUN NUMBER 9005                          HYDROSTATIC BEARING PAD WITH 4 RECESSES.
    FEEDING = COMMON CONSTANT PRESSURE (  1.000 ATM.) RESERVOIR FEEDING ALL RECESSES WITH CAPILLARY COMPENSATION.
PAD CONFIGURATION. 0000000000000000000000000000
                   0222222222222222222222222222220
                   0222222222222222222222222222220
                   0222222222222222222222222222220
                   0222211111111112221111111111112220
                   0222211111111112221111111111112220
                   0222211111111112221111111111112220
                   0222211111111112221111111111112220
                   0222211111111112221111111111112220
                   0222222222222222222222222222220
                   0222222222222222222222222222220
                   0222222222222222222222222222220
                   0222211111111112221111111111112220
                   0222211111111112221111111111112220
                   0222211111111112221111111111112220
                   0222211111111112221111111111112220
                   0222211111111112221111111111112220
                   0222222222222222222222222222220
                   0222222222222222222222222222220
                   0222222222222222222222222222220
                   0000000000000000000000000000000
QQ(I)=       3.37      3.37      3.37      3.37          ** Q(I,J)=   8.8285  -0.2111  -1.3431  -2.5858
W(I)=      0.1115    0.1115    0.1115    0.1115          **          -0.2111   8.8285  -2.5858  -1.3431
CSI(I)=    0.2865    0.7135    0.7135    0.2865          **          -1.3431  -2.5858   8.8285  -0.2111
ETA(I)=    0.2022    0.4645    0.2022    0.4645          **          -2.5858  -1.3431  -0.2111   8.8285
CAPILLARY FACTORS F(I)=   0.1200000E 02   0.1200000E 02   0.1200000E 02   0.1200000E 02
FINAL RESULTS = TOTAL LOAD  0.3207  CSI  0.5000 ETA   0.3333  TOTAL FLOW   0.1348508E 02
```

PRESSURE DISTRIBUTION

RUN 9005	I= 1	I= 2	I= 3	I= 4	I= 5	I= 6	I= 7	I= 8	I= 9	I= 10
J= 1,	0.	0.	0.	0.	0.	0.	0.	0.	0.	0.
J= 2,	0.	0.0356	0.0714	0.1063	0.1364	0.1560	0.1669	0.1726	0.1752	0.1761
J= 3,	0.	0.0713	0.1443	0.2182	0.2842	0.3213	0.3400	0.3490	0.3529	0.3542
J= 4,	0.	0.1059	0.2178	0.3394	0.4620	0.5064	0.5240	0.5314	0.5345	0.5355
J= 5,	0.	0.1354	0.2828	0.4611	0.7191	0.7191	0.7191	0.7191	0.7191	0.7191
J= 6,	0.	0.1540	0.3185	0.5042	0.7191	0.7191	0.7191	0.7191	0.7191	0.7191
J= 7,	0.	0.1633	0.3344	0.5195	0.7191	0.7191	0.7191	0.7191	0.7191	0.7191
J= 8,	0.	0.1659	0.3380	0.5215	0.7191	0.7191	0.7191	0.7191	0.7191	0.7191
J= 9,	0.	0.1640	0.3323	0.5111	0.7191	0.7191	0.7191	0.7191	0.7191	0.7191
J= 10,	0.	0.1595	0.3187	0.4738	0.6096	0.6671	0.6931	0.7050	0.7104	0.7124
J= 11,	0.	0.1573	0.3126	0.4593	0.5810	0.6488	0.6829	0.6993	0.7068	0.7097
J= 12,	0.	0.1595	0.3187	0.4738	0.6096	0.6671	0.6931	0.7050	0.7104	0.7124
J= 13,	0.	0.1640	0.3323	0.5111	0.7191	0.7191	0.7191	0.7191	0.7191	0.7191
J= 14,	0.	0.1659	0.3380	0.5215	0.7191	0.7191	0.7191	0.7191	0.7191	0.7191
J= 15,	0.	0.1633	0.3344	0.5195	0.7191	0.7191	0.7191	0.7191	0.7191	0.7191
J= 16,	0.	0.1540	0.3185	0.5042	0.7191	0.7191	0.7191	0.7191	0.7191	0.7191
J= 17,	0.	0.1354	0.2828	0.4611	0.7191	0.7191	0.7191	0.7191	0.7191	0.7191
J= 18,	0.	0.1059	0.2178	0.3394	0.4620	0.5064	0.5240	0.5314	0.5345	0.5355
J= 19,	0.	0.0713	0.1443	0.2182	0.2842	0.3213	0.3400	0.3490	0.3529	0.3542
J= 20,	0.	0.0356	0.0714	0.1063	0.1364	0.1560	0.1669	0.1726	0.1752	0.1761
J= 21,	0.	0.	0.	0.	0.	0.	0.	0.	0.	0.

PRESSURE DISTRIBUTION

RUN 9005	I= 11	I= 12	I= 13	I= 14	I= 15	I= 16	I= 17	I= 18	I= 19	I= 20
J= 1,	0.	0.	0.	0.	0.	0.	0.	0.	0.	0.
J= 2,	0.1758	0.1743	0.1713	0.1665	0.1607	0.1582	0.1607	0.1665	0.1713	0.1743
J= 3,	0.3537	0.3513	0.3460	0.3359	0.3203	0.3136	0.3203	0.3359	0.3460	0.3513
J= 4,	0.5350	0.5329	0.5275	0.5137	0.4746	0.4595	0.4746	0.5137	0.5275	0.5329
J= 5,	0.7191	0.7191	0.7191	0.7191	0.6088	0.5796	0.6088	0.7191	0.7191	0.7191
J= 6,	0.7191	0.7191	0.7191	0.7191	0.6649	0.6456	0.6649	0.7191	0.7191	0.7191
J= 7,	0.7191	0.7191	0.7191	0.7191	0.6889	0.6771	0.6889	0.7191	0.7191	0.7191
J= 8,	0.7191	0.7191	0.7191	0.7191	0.6980	0.6897	0.6980	0.7191	0.7191	0.7191
J= 9,	0.7191	0.7191	0.7191	0.7191	0.6987	0.6917	0.6987	0.7191	0.7191	0.7191
J= 10,	0.7126	0.7112	0.7083	0.7028	0.6922	0.6876	0.6922	0.7028	0.7083	0.7112
J= 11,	0.7099	0.7081	0.7041	0.6977	0.6891	0.6853	0.6891	0.6977	0.7041	0.7081
J= 12,	0.7126	0.7112	0.7083	0.7028	0.6922	0.6876	0.6922	0.7028	0.7083	0.7112
J= 13,	0.7191	0.7191	0.7191	0.7191	0.6987	0.6917	0.6987	0.7191	0.7191	0.7191
J= 14,	0.7191	0.7191	0.7191	0.7191	0.6980	0.6897	0.6980	0.7191	0.7191	0.7191
J= 15,	0.7191	0.7191	0.7191	0.7191	0.6889	0.6771	0.6889	0.7191	0.7191	0.7191
J= 16,	0.7191	0.7191	0.7191	0.7191	0.6649	0.6456	0.6649	0.7191	0.7191	0.7191
J= 17,	0.7191	0.7191	0.7191	0.7191	0.6088	0.5796	0.6088	0.7191	0.7191	0.7191
J= 18,	0.5350	0.5329	0.5275	0.5137	0.4746	0.4595	0.4746	0.5137	0.5275	0.5329
J= 19,	0.3537	0.3513	0.3460	0.3359	0.3203	0.3136	0.3203	0.3359	0.3460	0.3513
J= 20,	0.1758	0.1743	0.1713	0.1665	0.1607	0.1582	0.1607	0.1665	0.1713	0.1743
J= 21,	0.	0.	0.	0.	0.	0.	0.	0.	0.	0.

PRESSURE DISTRIBUTION

RUN 9005	I= 21	I= 22	I= 23	I= 24	I= 25	I= 26	I= 27	I= 28	I= 29	I= 30
J= 1,	0.	0.	0.	0.	0.	0.	0.	0.	0.	0.
J= 2,	0.1758	0.1761	0.1752	0.1726	0.1669	0.1560	0.1364	0.1063	0.0714	0.0356
J= 3,	0.3537	0.3542	0.3529	0.3490	0.3400	0.3213	0.2842	0.2182	0.1443	0.0713
J= 4,	0.5350	0.5355	0.5345	0.5314	0.5240	0.5064	0.4620	0.3394	0.2178	0.1059
J= 5,	0.7191	0.7191	0.7191	0.7191	0.7191	0.7191	0.7191	0.4611	0.2828	0.1354
J= 6,	0.7191	0.7191	0.7191	0.7191	0.7191	0.7191	0.7191	0.5042	0.3185	0.1540
J= 7,	0.7191	0.7191	0.7191	0.7191	0.7191	0.7191	0.7191	0.5195	0.3344	0.1633
J= 8,	0.7191	0.7191	0.7191	0.7191	0.7191	0.7191	0.7191	0.5215	0.3380	0.1659
J= 9,	0.7191	0.7191	0.7191	0.7191	0.7191	0.7191	0.7191	0.5111	0.3323	0.1640
J= 10,	0.7126	0.7124	0.7104	0.7050	0.6931	0.6671	0.6096	0.4738	0.3187	0.1595
J= 11,	0.7099	0.7097	0.7068	0.6993	0.6829	0.6488	0.5810	0.4593	0.3126	0.1573
J= 12,	0.7126	0.7124	0.7104	0.7050	0.6931	0.6671	0.6096	0.4738	0.3187	0.1595
J= 13,	0.7191	0.7191	0.7191	0.7191	0.7191	0.7191	0.7191	0.5111	0.3323	0.1640
J= 14,	0.7191	0.7191	0.7191	0.7191	0.7191	0.7191	0.7191	0.5215	0.3380	0.1659
J= 15,	0.7191	0.7191	0.7191	0.7191	0.7191	0.7191	0.7191	0.5195	0.3344	0.1633
J= 16,	0.7191	0.7191	0.7191	0.7191	0.7191	0.7191	0.7191	0.5042	0.3185	0.1540
J= 17,	0.7191	0.7191	0.7191	0.7191	0.7191	0.7191	0.7191	0.4611	0.2828	0.1354
J= 18,	0.5350	0.5355	0.5345	0.5314	0.5240	0.5064	0.4620	0.3394	0.2178	0.1059
J= 19,	0.3537	0.3542	0.3529	0.3490	0.3400	0.3213	0.2842	0.2182	0.1443	0.0713
J= 20,	0.1758	0.1761	0.1752	0.1726	0.1669	0.1560	0.1364	0.1063	0.0714	0.0356
J= 21,	0.	0.	0.	0.	0.	0.	0.	0.	0.	0.

PRESSURE DISTRIBUTION

RUN 9005 I= 31 I=

J= 1, 0.
J= 2, 0.
J= 3, 0.
J= 4, 0.
J= 5, 0.
J= 6, 0.
J= 7, 0.
J= 8, 0.
J= 9, 0.
J= 10, 0.
J= 11, 0.
J= 12, 0.
J= 13, 0.
J= 14, 0.
J= 15, 0.
J= 16, 0.
J= 17, 0.
J= 18, 0.
J= 19, 0.
J= 20, 0.
J= 21, 0.

CLEARANCE DISTRIBUTION

RUN 9005	I= 1	I= 2	I= 3	I= 4	I= 5	I= 6	I= 7	I= 8	I= 9	I= 10
J= 1,	1.0000000	1.0000000	1.0000000	1.0000000	1.0000000	1.0000000	1.0000000	1.0000000	1.0000000	1.0000000
J= 2,	1.0000000	1.0000000	1.0000000	1.0000000	1.0000000	1.0000000	1.0000000	1.0000000	1.0000000	1.0000000
J= 3,	1.0000000	1.0000000	1.0000000	1.0000000	1.0000000	1.0000000	1.0000000	1.0000000	1.0000000	1.0000000
J= 4,	1.0000000	1.0000000	1.0000000	1.0000000	1.0000000	1.0000000	1.0000000	1.0000000	1.0000000	1.0000000
J= 5,	1.0000000	1.0000000	1.0000000	1.0000000	1.0000000	1.0000000	1.0000000	1.0000000	1.0000000	1.0000000
J= 6,	1.0000000	1.0000000	1.0000000	1.0000000	1.0000000	1.0000000	1.0000000	1.0000000	1.0000000	1.0000000
J= 7,	1.0000000	1.0000000	1.0000000	1.0000000	1.0000000	1.0000000	1.0000000	1.0000000	1.0000000	1.0000000
J= 8,	1.0000000	1.0000000	1.0000000	1.0000000	1.0000000	1.0000000	1.0000000	1.0000000	1.0000000	1.0000000
J= 9,	1.0000000	1.0000000	1.0000000	1.0000000	1.0000000	1.0000000	1.0000000	1.0000000	1.0000000	1.0000000
J= 10,	1.0000000	1.0000000	1.0000000	1.0000000	1.0000000	1.0000000	1.0000000	1.0000000	1.0000000	1.0000000
J= 11,	1.0000000	1.0000000	1.0000000	1.0000000	1.0000000	1.0000000	1.0000000	1.0000000	1.0000000	1.0000000
J= 12,	1.0000000	1.0000000	1.0000000	1.0000000	1.0000000	1.0000000	1.0000000	1.0000000	1.0000000	1.0000000
J= 13,	1.0000000	1.0000000	1.0000000	1.0000000	1.0000000	1.0000000	1.0000000	1.0000000	1.0000000	1.0000000
J= 14,	1.0000000	1.0000000	1.0000000	1.0000000	1.0000000	1.0000000	1.0000000	1.0000000	1.0000000	1.0000000
J= 15,	1.0000000	1.0000000	1.0000000	1.0000000	1.0000000	1.0000000	1.0000000	1.0000000	1.0000000	1.0000000
J= 16,	1.0000000	1.0000000	1.0000000	1.0000000	1.0000000	1.0000000	1.0000000	1.0000000	1.0000000	1.0000000
J= 17,	1.0000000	1.0000000	1.0000000	1.0000000	1.0000000	1.0000000	1.0000000	1.0000000	1.0000000	1.0000000
J= 18,	1.0000000	1.0000000	1.0000000	1.0000000	1.0000000	1.0000000	1.0000000	1.0000000	1.0000000	1.0000000
J= 19,	1.0000000	1.0000000	1.0000000	1.0000000	1.0000000	1.0000000	1.0000000	1.0000000	1.0000000	1.0000000
J= 20,	1.0000000	1.0000000	1.0000000	1.0000000	1.0000000	1.0000000	1.0000000	1.0000000	1.0000000	1.0000000
J= 21,	1.0000000	1.0000000	1.0000000	1.0000000	1.0000000	1.0000000	1.0000000	1.0000000	1.0000000	1.0000000

CLEARANCE DISTRIBUTION

RUN 9005	I= 11	I= 12	I= 13	I= 14	I= 15	I= 16	I= 17	I= 18	I= 19	I= 20
J= 1,	1.0000000	1.0000000	1.0000000	1.0000000	1.0000000	1.0000000	1.0000000	1.0000000	1.0000000	1.0000000
J= 2,	1.0000000	1.0000000	1.0000000	1.0000000	1.0000000	1.0000000	1.0000000	1.0000000	1.0000000	1.0000000
J= 3,	1.0000000	1.0000000	1.0000000	1.0000000	1.0000000	1.0000000	1.0000000	1.0000000	1.0000000	1.0000000
J= 4,	1.0000000	1.0000000	1.0000000	1.0000000	1.0000000	1.0000000	1.0000000	1.0000000	1.0000000	1.0000000
J= 5,	1.0000000	1.0000000	1.0000000	1.0000000	1.0000000	1.0000000	1.0000000	1.0000000	1.0000000	1.0000000
J= 6,	1.0000000	1.0000000	1.0000000	1.0000000	1.0000000	1.0000000	1.0000000	1.0000000	1.0000000	1.0000000
J= 7,	1.0000000	1.0000000	1.0000000	1.0000000	1.0000000	1.0000000	1.0000000	1.0000000	1.0000000	1.0000000
J= 8,	1.0000000	1.0000000	1.0000000	1.0000000	1.0000000	1.0000000	1.0000000	1.0000000	1.0000000	1.0000000
J= 9,	1.0000000	1.0000000	1.0000000	1.0000000	1.0000000	1.0000000	1.0000000	1.0000000	1.0000000	1.0000000
J= 10,	1.0000000	1.0000000	1.0000000	1.0000000	1.0000000	1.0000000	1.0000000	1.0000000	1.0000000	1.0000000
J= 11,	1.0000000	1.0000000	1.0000000	1.0000000	1.0000000	1.0000000	1.0000000	1.0000000	1.0000000	1.0000000
J= 12,	1.0000000	1.0000000	1.0000000	1.0000000	1.0000000	1.0000000	1.0000000	1.0000000	1.0000000	1.0000000
J= 13,	1.0000000	1.0000000	1.0000000	1.0000000	1.0000000	1.0000000	1.0000000	1.0000000	1.0000000	1.0000000
J= 14,	1.0000000	1.0000000	1.0000000	1.0000000	1.0000000	1.0000000	1.0000000	1.0000000	1.0000000	1.0000000
J= 15,	1.0000000	1.0000000	1.0000000	1.0000000	1.0000000	1.0000000	1.0000000	1.0000000	1.0000000	1.0000000
J= 16,	1.0000000	1.0000000	1.0000000	1.0000000	1.0000000	1.0000000	1.0000000	1.0000000	1.0000000	1.0000000
J= 17,	1.0000000	1.0000000	1.0000000	1.0000000	1.0000000	1.0000000	1.0000000	1.0000000	1.0000000	1.0000000
J= 18,	1.0000000	1.0000000	1.0000000	1.0000000	1.0000000	1.0000000	1.0000000	1.0000000	1.0000000	1.0000000
J= 19,	1.0000000	1.0000000	1.0000000	1.0000000	1.0000000	1.0000000	1.0000000	1.0000000	1.0000000	1.0000000
J= 20,	1.0000000	1.0000000	1.0000000	1.0000000	1.0000000	1.0000000	1.0000000	1.0000000	1.0000000	1.0000000
J= 21,	1.0000000	1.0000000	1.0000000	1.0000000	1.0000000	1.0000000	1.0000000	1.0000000	1.0000000	1.0000000

CLEARANCE DISTRIBUTION

RUN 9005	I= 21	I= 22	I= 23	I= 24	I= 25	I= 26	I= 27	I= 28	I= 29	I= 30
J= 1,	1.0000000	1.0000000	1.0000000	1.0000000	1.0000000	1.0000000	1.0000000	1.0000000	1.0000000	1.0000000
J= 2,	1.0000000	1.0000000	1.0000000	1.0000000	1.0000000	1.0000000	1.0000000	1.0000000	1.0000000	1.0000000
J= 3,	1.0000000	1.0000000	1.0000000	1.0000000	1.0000000	1.0000000	1.0000000	1.0000000	1.0000000	1.0000000
J= 4,	1.0000000	1.0000000	1.0000000	1.0000000	1.0000000	1.0000000	1.0000000	1.0000000	1.0000000	1.0000000
J= 5,	1.0000000	1.0000000	1.0000000	1.0000000	1.0000000	1.0000000	1.0000000	1.0000000	1.0000000	1.0000000
J= 6,	1.0000000	1.0000000	1.0000000	1.0000000	1.0000000	1.0000000	1.0000000	1.0000000	1.0000000	1.0000000
J= 7,	1.0000000	1.0000000	1.0000000	1.0000000	1.0000000	1.0000000	1.0000000	1.0000000	1.0000000	1.0000000
J= 8,	1.0000000	1.0000000	1.0000000	1.0000000	1.0000000	1.0000000	1.0000000	1.0000000	1.0000000	1.0000000
J= 9,	1.0000000	1.0000000	1.0000000	1.0000000	1.0000000	1.0000000	1.0000000	1.0000000	1.0000000	1.0000000
J= 10,	1.0000000	1.0000000	1.0000000	1.0000000	1.0000000	1.0000000	1.0000000	1.0000000	1.0000000	1.0000000
J= 11,	1.0000000	1.0000000	1.0000000	1.0000000	1.0000000	1.0000000	1.0000000	1.0000000	1.0000000	1.0000000
J= 12,	1.0000000	1.0000000	1.0000000	1.0000000	1.0000000	1.0000000	1.0000000	1.0000000	1.0000000	1.0000000
J= 13,	1.0000000	1.0000000	1.0000000	1.0000000	1.0000000	1.0000000	1.0000000	1.0000000	1.0000000	1.0000000
J= 14,	1.0000000	1.0000000	1.0000000	1.0000000	1.0000000	1.0000000	1.0000000	1.0000000	1.0000000	1.0000000
J= 15,	1.0000000	1.0000000	1.0000000	1.0000000	1.0000000	1.0000000	1.0000000	1.0000000	1.0000000	1.0000000
J= 16,	1.0000000	1.0000000	1.0000000	1.0000000	1.0000000	1.0000000	1.0000000	1.0000000	1.0000000	1.0000000
J= 17,	1.0000000	1.0000000	1.0000000	1.0000000	1.0000000	1.0000000	1.0000000	1.0000000	1.0000000	1.0000000
J= 18,	1.0000000	1.0000000	1.0000000	1.0000000	1.0000000	1.0000000	1.0000000	1.0000000	1.0000000	1.0000000
J= 19,	1.0000000	1.0000000	1.0000000	1.0000000	1.0000000	1.0000000	1.0000000	1.0000000	1.0000000	1.0000000
J= 20,	1.0000000	1.0000000	1.0000000	1.0000000	1.0000000	1.0000000	1.0000000	1.0000000	1.0000000	1.0000000
J= 21,	1.0000000	1.0000000	1.0000000	1.0000000	1.0000000	1.0000000	1.0000000	1.0000000	1.0000000	1.0000000

CLEARANCE DISTRIBUTION

```
RUN  9005    I= 31       I=
J=  1,      1.0000000
J=  2,      1.0000000
J=  3,      1.0000000
J=  4,      1.0000000
J=  5,      1.0000000
J=  6,      1.0000000
J=  7,      1.0000000
J=  8,      1.0000000
J=  9,      1.0000000
J= 10,      1.0000000
J= 11,      1.0000000
J= 12,      1.0000000
J= 13,      1.0000000
J= 14,      1.0000000
J= 15,      1.0000000
J= 16,      1.0000000
J= 17,      1.0000000
J= 18,      1.0000000
J= 19,      1.0000000
J= 20,      1.0000000
J= 21,      1.0000000
```

```
RUN NUMBER 9006                                HYDROSTATIC BEARING PAD WITH 4 RECESSES.
    FEEDING = COMMON CONSTANT PRESSURE (  1.000 ATM.) RESERVOIR FEEDING ALL RECESSES WITH CAPILLARY COMPENSATION.
PAD CONFIGURATION. 0000000000000000000000000000000
                   0222222222222222222222222222220
                   0222222222222222222222222222220
                   0222222222222222222222222222220
                   0222211111111122211111111112220
                   0222211111111122211111111112220
                   0222211111111122211111111112220
                   0222211111111122211111111112220
                   0222211111111122211111111112220
                   0222222222222222222222222222220
                   0222222222222222222222222222220
                   0222222222222222222222222222220
                   0222211111111122211111111112220
                   0222211111111122211111111112220
                   0222211111111122211111111112220
                   0222211111111122211111111112220
                   0222211111111122211111111112220
                   0222222222222222222222222222220
                   0222222222222222222222222222220
                   0222222222222222222222222222220
                   0000000000000000000000000000000
QQ(I)=       1.99      5.33      5.33      1.99          ** Q(I,J)=   4.7049  -0.2122  -1.3299  -1.2971
W(I)=      0.1122    0.1121    0.1121    0.1122          **          -0.2053  16.6427  -4.7231  -1.3364
CSI(I)=    0.2792    0.7087    0.7087    0.2792          **          -1.3364  -4.7231  16.6427  -0.2053
ETA(I)=    0.2022    0.4644    0.2023    0.4644          **          -1.2971  -1.3299  -0.2122   4.7049
CAPILLARY FACTORS F(I)=   0.1200000E 02   0.1200000E 02   0.1200000E 02   0.1200000E 02
FINAL RESULTS = TOTAL LOAD  0.3119  CSI  0.4507 ETA   0.3333  TOTAL FLOW   0.1464277E 02
```

PRESSURE DISTRIBUTION

RUN 9006	I= 1	I= 2	I= 3	I= 4	I= 5	I= 6	I= 7	I= 8	I= 9	I= 10
J= 1,	0.	0.	0.	0.	0.	0.	0.	0.	0.	0.
J= 2,	0.	0.0548	0.1012	0.1406	0.1709	0.1888	0.1980	0.2022	0.2037	0.2034
J= 3,	0.	0.1091	0.2032	0.2857	0.3516	0.3856	0.4012	0.4079	0.4101	0.4097
J= 4,	0.	0.1607	0.3031	0.4372	0.5583	0.5986	0.6134	0.6190	0.6207	0.6204
J= 5,	0.	0.2040	0.3894	0.5827	0.8344	0.8344	0.8344	0.8344	0.8344	0.8344
J= 6,	0.	0.2311	0.4366	0.6347	0.8344	0.8344	0.8344	0.8344	0.8344	0.8344
J= 7,	0.	0.2449	0.4580	0.6534	0.8344	0.8344	0.8344	0.8344	0.8344	0.8344
J= 8,	0.	0.2495	0.4641	0.6572	0.8344	0.8344	0.8344	0.8344	0.8344	0.8344
J= 9,	0.	0.2480	0.4593	0.6483	0.8344	0.8344	0.8344	0.8344	0.8344	0.8344
J= 10,	0.	0.2432	0.4459	0.6142	0.7425	0.7926	0.8135	0.8222	0.8251	0.8248
J= 11,	0.	0.2408	0.4398	0.6009	0.7181	0.7778	0.8053	0.8171	0.8213	0.8208
J= 12,	0.	0.2432	0.4459	0.6142	0.7425	0.7926	0.8135	0.8222	0.8251	0.8248
J= 13,	0.	0.2480	0.4593	0.6483	0.8344	0.8344	0.8344	0.8344	0.8344	0.8344
J= 14,	0.	0.2495	0.4641	0.6572	0.8344	0.8344	0.8344	0.8344	0.8344	0.8344
J= 15,	0.	0.2449	0.4580	0.6534	0.8344	0.8344	0.8344	0.8344	0.8344	0.8344
J= 16,	0.	0.2311	0.4366	0.6347	0.8344	0.8344	0.8344	0.8344	0.8344	0.8344
J= 17,	0.	0.2040	0.3894	0.5827	0.8344	0.8344	0.8344	0.8344	0.8344	0.8344
J= 18,	0.	0.1607	0.3031	0.4372	0.5583	0.5986	0.6134	0.6190	0.6207	0.6204
J= 19,	0.	0.1091	0.2032	0.2857	0.3516	0.3856	0.4012	0.4079	0.4101	0.4097
J= 20,	0.	0.0548	0.1012	0.1406	0.1709	0.1888	0.1980	0.2022	0.2037	0.2034
J= 21,	0.	0.	0.	0.	0.	0.	0.	0.	0.	0.

PRESSURE DISTRIBUTION

RUN 9006	I= 11	I= 12	I= 13	I= 14	I= 15	I= 16	I= 17	I= 18	I= 19	I= 20
J= 1,	0.	0.	0.	0.	0.	0.	0.	0.	0.	0.
J= 2,	0.2015	0.1974	0.1899	0.1780	0.1621	0.1487	0.1409	0.1380	0.1372	0.1370
J= 3,	0.4067	0.4001	0.3872	0.3635	0.3256	0.2953	0.2795	0.2759	0.2751	0.2750
J= 4,	0.6181	0.6125	0.5998	0.5695	0.4888	0.4335	0.4104	0.4135	0.4143	0.4146
J= 5,	0.8344	0.8344	0.8344	0.8344	0.6376	0.5478	0.5195	0.5555	0.5555	0.5555
J= 6,	0.8344	0.8344	0.8344	0.8344	0.6975	0.6105	0.5670	0.5555	0.5555	0.5555
J= 7,	0.8344	0.8344	0.8344	0.8344	0.7223	0.6403	0.5880	0.5555	0.5555	0.5555
J= 8,	0.8344	0.8344	0.8344	0.8344	0.7304	0.6518	0.5963	0.5555	0.5555	0.5555
J= 9,	0.8344	0.8344	0.8344	0.8344	0.7272	0.6527	0.5989	0.5555	0.5555	0.5555
J= 10,	0.8216	0.8144	0.8001	0.7709	0.7071	0.6475	0.6015	0.5705	0.5591	0.5546
J= 11,	0.8164	0.8065	0.7877	0.7537	0.6989	0.6447	0.6019	0.5734	0.5600	0.5541
J= 12,	0.8216	0.8144	0.8001	0.7709	0.7071	0.6475	0.6015	0.5705	0.5591	0.5546
J= 13,	0.8344	0.8344	0.8344	0.8344	0.7272	0.6527	0.5989	0.5555	0.5555	0.5555
J= 14,	0.8344	0.8344	0.8344	0.8344	0.7304	0.6518	0.5963	0.5555	0.5555	0.5555
J= 15,	0.8344	0.8344	0.8344	0.8344	0.7223	0.6403	0.5880	0.5555	0.5555	0.5555
J= 16,	0.8344	0.8344	0.8344	0.8344	0.6975	0.6105	0.5670	0.5555	0.5555	0.5555
J= 17,	0.8344	0.8344	0.8344	0.8344	0.6376	0.5478	0.5195	0.5555	0.5555	0.5555
J= 18,	0.6181	0.6125	0.5998	0.5695	0.4888	0.4335	0.4104	0.4135	0.4143	0.4146
J= 19,	0.4067	0.4001	0.3872	0.3635	0.3256	0.2953	0.2795	0.2759	0.2751	0.2750
J= 20,	0.2015	0.1974	0.1899	0.1780	0.1621	0.1487	0.1409	0.1380	0.1372	0.1370
J= 21,	0.	0.	0.	0.	0.	0.	0.	0.	0.	0.

PRESSURE DISTRIBUTION

N 9006	I= 21	I= 22	I= 23	I= 24	I= 25	I= 26	I= 27	I= 28	I= 29	I= 30
1,	0.	0.	0.	0.	0.	0.	0.	0.	0.	0.
2,	0.1368	0.1362	0.1350	0.1323	0.1272	0.1176	0.1012	0.0770	0.0502	0.0243
3,	0.2748	0.2740	0.2721	0.2681	0.2599	0.2436	0.2124	0.1590	0.1020	0.0488
4,	0.4145	0.4139	0.4125	0.4094	0.4026	0.3872	0.3497	0.2494	0.1549	0.0728
5,	0.5555	0.5555	0.5555	0.5555	0.5555	0.5555	0.5555	0.3422	0.2023	0.0935
6,	0.5555	0.5555	0.5555	0.5555	0.5555	0.5555	0.5555	0.3749	0.2283	0.1066
7,	0.5555	0.5555	0.5555	0.5555	0.5555	0.5555	0.5555	0.3863	0.2397	0.1130
J= 8,	0.5555	0.5555	0.5555	0.5555	0.5555	0.5555	0.5555	0.3875	0.2420	0.1147
J= 9,	0.5555	0.5555	0.5555	0.5555	0.5555	0.5555	0.5555	0.3785	0.2370	0.1129
J= 10,	0.5525	0.5508	0.5480	0.5426	0.5315	0.5085	0.4593	0.3469	0.2259	0.1093
J= 11,	0.5513	0.5488	0.5450	0.5374	0.5222	0.4920	0.4343	0.3346	0.2209	0.1076
J= 12,	0.5525	0.5508	0.5480	0.5426	0.5315	0.5085	0.4593	0.3469	0.2259	0.1093
J= 13,	0.5555	0.5555	0.5555	0.5555	0.5555	0.5555	0.5555	0.3785	0.2370	0.1129
J= 14,	0.5555	0.5555	0.5555	0.5555	0.5555	0.5555	0.5555	0.3875	0.2420	0.1147
J= 15,	0.5555	0.5555	0.5555	0.5555	0.5555	0.5555	0.5555	0.3863	0.2397	0.1130
J= 16,	0.5555	0.5555	0.5555	0.5555	0.5555	0.5555	0.5555	0.3749	0.2283	0.1066
J= 17,	0.5555	0.5555	0.5555	0.5555	0.5555	0.5555	0.5555	0.3422	0.2023	0.0935
J= 18,	0.4145	0.4139	0.4125	0.4094	0.4026	0.3872	0.3497	0.2494	0.1549	0.0728
J= 19,	0.2748	0.2740	0.2721	0.2681	0.2599	0.2436	0.2124	0.1590	0.1020	0.0488
J= 20,	0.1368	0.1362	0.1350	0.1323	0.1272	0.1176	0.1012	0.0770	0.0502	0.0243
J= 21,	0.	0.	0.	0.	0.	0.	0.	0.	0.	0.

PRESSURE DISTRIBUTION

```
RUN  9006   I=  31       I=
J=  1,        0.
J=  2,        0.
J=  3,        0.
J=  4,        0.
J=  5,        0.
J=  6,        0.
J=  7,        0.
J=  8,        0.
J=  9,        0.
J= 10,        0.
J= 11,        0.
J= 12,        0.
J= 13,        0.
J= 14,        0.
J= 15,        0.
J= 16,        0.
J= 17,        0.
J= 18,        0.
J= 19,        0.
J= 20,        0.
J= 21,        0.
```

CLEARANCE DISTRIBUTION

RUN 9006	I= 1	I= 2	I= 3	I= 4	I= 5	I= 6	I= 7	I= 8	I= 9	I= 10
J= 1,	0.5000000	0.5333333	0.5666667	0.6000000	0.6333333	0.6666667	0.7000000	0.7333333	0.7666667	0.8000000
J= 2,	0.5000000	0.5333333	0.5666667	0.6000000	0.6333333	0.6666667	0.7000000	0.7333333	0.7666667	0.8000000
J= 3,	0.5000000	0.5333333	0.5666667	0.6000000	0.6333333	0.6666667	0.7000000	0.7333333	0.7666667	0.8000000
J= 4,	0.5000000	0.5333333	0.5666667	0.6000000	0.6333333	0.6666667	0.7000000	0.7333333	0.7666667	0.8000000
J= 5,	0.5000000	0.5333333	0.5666667	0.6000000	0.6333333	0.6666667	0.7000000	0.7333333	0.7666667	0.8000000
J= 6,	0.5000000	0.5333333	0.5666667	0.6000000	0.6333333	0.6666667	0.7000000	0.7333333	0.7666667	0.8000000
J= 7,	0.5000000	0.5333333	0.5666667	0.6000000	0.6333333	0.6666667	0.7000000	0.7333333	0.7666667	0.8000000
J= 8,	0.5000000	0.5333333	0.5666667	0.6000000	0.6333333	0.6666667	0.7000000	0.7333333	0.7666667	0.8000000
J= 9,	0.5000000	0.5333333	0.5666667	0.6000000	0.6333333	0.6666667	0.7000000	0.7333333	0.7666667	0.8000000
J= 10,	0.5000000	0.5333333	0.5666667	0.6000000	0.6333333	0.6666667	0.7000000	0.7333333	0.7666667	0.8000000
J= 11,	0.5000000	0.5333333	0.5666667	0.6000000	0.6333333	0.6666667	0.7000000	0.7333333	0.7666667	0.8000000
J= 12,	0.5000000	0.5333333	0.5666667	0.6000000	0.6333333	0.6666667	0.7000000	0.7333333	0.7666667	0.8000000
J= 13,	0.5000000	0.5333333	0.5666667	0.6000000	0.6333333	0.6666667	0.7000000	0.7333333	0.7666667	0.8000000
J= 14,	0.5000000	0.5333333	0.5666667	0.6000000	0.6333333	0.6666667	0.7000000	0.7333333	0.7666667	0.8000000
J= 15,	0.5000000	0.5333333	0.5666667	0.6000000	0.6333333	0.6666667	0.7000000	0.7333333	0.7666667	0.8000000
J= 16,	0.5000000	0.5333333	0.5666667	0.6000000	0.6333333	0.6666667	0.7000000	0.7333333	0.7666667	0.8000000
J= 17,	0.5000000	0.5333333	0.5666667	0.6000000	0.6333333	0.6666667	0.7000000	0.7333333	0.7666667	0.8000000
J= 18,	0.5000000	0.5333333	0.5666667	0.6000000	0.6333333	0.6666667	0.7000000	0.7333333	0.7666667	0.8000000
J= 19,	0.5000000	0.5333333	0.5666667	0.6000000	0.6333333	0.6666667	0.7000000	0.7333333	0.7666667	0.8000000
J= 20,	0.5000000	0.5333333	0.5666667	0.6000000	0.6333333	0.6666667	0.7000000	0.7333333	0.7666667	0.8000000
J= 21,	0.5000000	0.5333333	0.5666667	0.6000000	0.6333333	0.6666667	0.7000000	0.7333333	0.7666667	0.8000000

CLEARANCE DISTRIBUTION

RUN 9006	I= 11	I= 12	I= 13	I= 14	I= 15	I= 16	I= 17	I= 18	I= 19	I= 20
J= 1,	0.8333333	0.8666667	0.9000000	0.9333333	0.9666667	1.0000000	1.0333333	1.0666667	1.1000000	1.1333333
J= 2,	0.8333333	0.8666667	0.9000000	0.9333333	0.9666667	1.0000000	1.0333333	1.0666667	1.1000000	1.1333333
J= 3,	0.8333333	0.8666667	0.9000000	0.9333333	0.9666667	1.0000000	1.0333333	1.0666667	1.1000000	1.1333333
J= 4,	0.8333333	0.8666667	0.9000000	0.9333333	0.9666667	1.0000000	1.0333333	1.0666667	1.1000000	1.1333333
J= 5,	0.8333333	0.8666667	0.9000000	0.9333333	0.9666667	1.0000000	1.0333333	1.0666667	1.1000000	1.1333333
J= 6,	0.8333333	0.8666667	0.9000000	0.9333333	0.9666667	1.0000000	1.0333333	1.0666667	1.1000000	1.1333333
J= 7,	0.8333333	0.8666667	0.9000000	0.9333333	0.9666667	1.0000000	1.0333333	1.0666667	1.1000000	1.1333333
J= 8,	0.8333333	0.8666667	0.9000000	0.9333333	0.9666667	1.0000000	1.0333333	1.0666667	1.1000000	1.1333333
J= 9,	0.8333333	0.8666667	0.9000000	0.9333333	0.9666667	1.0000000	1.0333333	1.0666667	1.1000000	1.1333333
J= 10,	0.8333333	0.8666667	0.9000000	0.9333333	0.9666667	1.0000000	1.0333333	1.0666667	1.1000000	1.1333333
J= 11,	0.8333333	0.8666667	0.9000000	0.9333333	0.9666667	1.0000000	1.0333333	1.0666667	1.1000000	1.1333333
J= 12,	0.8333333	0.8666667	0.9000000	0.9333333	0.9666667	1.0000000	1.0333333	1.0666667	1.1000000	1.1333333
J= 13,	0.8333333	0.8666667	0.9000000	0.9333333	0.9666667	1.0000000	1.0333333	1.0666667	1.1000000	1.1333333
J= 14,	0.8333333	0.8666667	0.9000000	0.9333333	0.9666667	1.0000000	1.0333333	1.0666667	1.1000000	1.1333333
J= 15,	0.8333333	0.8666667	0.9000000	0.9333333	0.9666667	1.0000000	1.0333333	1.0666667	1.1000000	1.1333333
J= 16,	0.8333333	0.8666667	0.9000000	0.9333333	0.9666667	1.0000000	1.0333333	1.0666667	1.1000000	1.1333333
J= 17,	0.8333333	0.8666667	0.9000000	0.9333333	0.9666667	1.0000000	1.0333333	1.0666667	1.1000000	1.1333333
J= 18,	0.8333333	0.8666667	0.9000000	0.9333333	0.9666667	1.0000000	1.0333333	1.0666667	1.1000000	1.1333333
J= 19,	0.8333333	0.8666667	0.9000000	0.9333333	0.9666667	1.0000000	1.0333333	1.0666667	1.1000000	1.1333333
J= 20,	0.8333333	0.8666667	0.9000000	0.9333333	0.9666667	1.0000000	1.0333333	1.0666667	1.1000000	1.1333333
J= 21,	0.8333333	0.8666667	0.9000000	0.9333333	0.9666667	1.0000000	1.0333333	1.0666667	1.1000000	1.1333333

CLEARANCE DISTRIBUTION

RUN 9006	I= 21	I= 22	I= 23	I= 24	I= 25	I= 26	I= 27	I= 28	I= 29	I= 30
J= 1,	1.1666667	1.2000000	1.2333333	1.2666667	1.3000000	1.3333333	1.3666667	1.4000000	1.4333333	1.4666667
J= 2,	1.1666667	1.2000000	1.2333333	1.2666667	1.3000000	1.3333333	1.3666667	1.4000000	1.4333333	1.4666667
J= 3,	1.1666667	1.2000000	1.2333333	1.2666667	1.3000000	1.3333333	1.3666667	1.4000000	1.4333333	1.4666667
J= 4,	1.1666667	1.2000000	1.2333333	1.2666667	1.3000000	1.3333333	1.3666667	1.4000000	1.4333333	1.4666667
J= 5,	1.1666667	1.2000000	1.2333333	1.2666667	1.3000000	1.3333333	1.3666667	1.4000000	1.4333333	1.4666667
J= 6,	1.1666667	1.2000000	1.2333333	1.2666667	1.3000000	1.3333333	1.3666667	1.4000000	1.4333333	1.4666667
J= 7,	1.1666667	1.2000000	1.2333333	1.2666667	1.3000000	1.3333333	1.3666667	1.4000000	1.4333333	1.4666667
J= 8,	1.1666667	1.2000000	1.2333333	1.2666667	1.3000000	1.3333333	1.3666667	1.4000000	1.4333333	1.4666667
J= 9,	1.1666667	1.2000000	1.2333333	1.2666667	1.3000000	1.3333333	1.3666667	1.4000000	1.4333333	1.4666667
J= 10,	1.1666667	1.2000000	1.2333333	1.2666667	1.3000000	1.3333333	1.3666667	1.4000000	1.4333333	1.4666667
J= 11,	1.1666667	1.2000000	1.2333333	1.2666667	1.3000000	1.3333333	1.3666667	1.4000000	1.4333333	1.4666667
J= 12,	1.1666667	1.2000000	1.2333333	1.2666667	1.3000000	1.3333333	1.3666667	1.4000000	1.4333333	1.4666667
J= 13,	1.1666667	1.2000000	1.2333333	1.2666667	1.3000000	1.3333333	1.3666667	1.4000000	1.4333333	1.4666667
J= 14,	1.1666667	1.2000000	1.2333333	1.2666667	1.3000000	1.3333333	1.3666667	1.4000000	1.4333333	1.4666667
J= 15,	1.1666667	1.2000000	1.2333333	1.2666667	1.3000000	1.3333333	1.3666667	1.4000000	1.4333333	1.4666667
J= 16,	1.1666667	1.2000000	1.2333333	1.2666667	1.3000000	1.3333333	1.3666667	1.4000000	1.4333333	1.4666667
J= 17,	1.1666667	1.2000000	1.2333333	1.2666667	1.3000000	1.3333333	1.3666667	1.4000000	1.4333333	1.4666667
J= 18,	1.1666667	1.2000000	1.2333333	1.2666667	1.3000000	1.3333333	1.3666667	1.4000000	1.4333333	1.4666667
J= 19,	1.1666667	1.2000000	1.2333333	1.2666667	1.3000000	1.3333333	1.3666667	1.4000000	1.4333333	1.4666667
J= 20,	1.1666667	1.2000000	1.2333333	1.2666667	1.3000000	1.3333333	1.3666667	1.4000000	1.4333333	1.4666667
J= 21,	1.1666667	1.2000000	1.2333333	1.2666667	1.3000000	1.3333333	1.3666667	1.4000000	1.4333333	1.4666667

CLEARANCE DISTRIBUTION

```
RUN  9006    I= 31       I=
J=  1,      1.5000000
J=  2,      1.5000000
J=  3,      1.5000000
J=  4,      1.5000000
J=  5,      1.5000000
J=  6,      1.5000000
J=  7,      1.5000000
J=  8,      1.5000000
J=  9,      1.5000000
J= 10,      1.5000000
J= 11,      1.5000000
J= 12,      1.5000000
J= 13,      1.5000000
J= 14,      1.5000000
J= 15,      1.5000000
J= 16,      1.5000000
J= 17,      1.5000000
J= 18,      1.5000000
J= 19,      1.5000000
J= 20,      1.5000000
J= 21,      1.5000000
```