BOEING

104 p.

N64-27288

code 1 cat. -27

NASA CR 56842

OTS PRICE

XEROX $ 9.10 ph

MICROFILM $ _____

SEATTLE, WASHINGTON

APPLIED MATHEMATICS

ENGINEERING SERVICES
AERO-SPACE DIVISION
THE BOEING COMPANY

TITLE

Air Augmented Rocket (One-Dimensional)

Work NAS8-11017

REFERENCE NUMBER

AS 1961

N64-27288

COMPUTING FACILITY

IBM 7094

REQUEST ORIGIN Launch Systems, 2-5734

APPLIED MATHEMATICS Aerodynamics and Propulsion, 2-5343-3

PREPARED BY Forney M. Knox Forney M. Knox

CHECKED BY Loren R. Anderson Loren R. Anderson

APPROVED BY H. James Kuhls H. James Kuhls
Fred B. Lavering F B Lavering 5-8-64

DATE OF APPROVAL 4-16-64

DATE OF REVISION

2-5305-30-84

TABLE OF CONTENTS

		Page
1.0	GENERAL INFORMATION	2
1.1	Purpose	2
1.2	Assumptions	2
1.3	Limitations	3
1.4	Recommendations	3
2.0	PROCEDURE	5
2.1	Nomenclature	5
2.2	Method	6
2.3	Results	13
2.4	References	14
3.0	INPUT PREPARATION AND OUTPUT DESCRIPTION	15
3.1	Input Data Preparation	15
3.1.1	Card Set 0	15
3.1.2	Card Set 1	15
3.1.3	Card Set 2	17
3.1.4	Card Set 3	17
3.1.5	Card Set 4	18
3.1.6	Card Set 5	18
3.1.7	Card Set 6	18
3.1.8	Card Set 7	19
3.1.9	Sample Cases	19
3.2	Output Data	19
3.2.1	Heading	19
3.2.2	Intermediate Printout	26
3.2.3	Solution	26
3.2.4	Sample Cases	26
4.0	OPERATING INFORMATION	40
4.1	Program and Data Set-up	40
4.1.1	Program	40
4.1.2	Data	40
4.2	Machine Set-Up and Run Information	40
4.2.1	End of Run	40
4.2.2	Error Comments	40

TABLE OF CONTENTS

(Continued)

		Page
4.2.3	Run Time	41
4.2.4	Printout	41
4.2.5	Tape Usage	41
5.0	PROGRAMMING INFORMATION	42
5.1	Flow Diagrams	42
5.2	Segmentation	48
5.2.1	Main Program	48
5.2.2	Subprograms	48
5.2.3	FAP Routines	48
5.3	Storage Requirements	49
5.4	Deck Identification	49
5.5	Program Listings	49
6.0	APPENDICES	50
	A - Deck Identification	51
	B - Program Listings	55
	C - Input Data Forms	97

ACTIVE PAGE RECORD

SECTION	ORIG REL PAGE NO.	REV SYM	ADDED PAGES PAGE NO.	REV SYM	PAGE NO.	REV SYM	SECTION	ORIG REL PAGE NO.	REV SYM	ADDED PAGES PAGE NO.	REV SYM	PAGE NO.	REV SYM
	1							42					
	2							43					
	3							44					
	4							45					
	5							46					
	6							47					
	7							48					
	8							49					
	9							50					
	10							51					
	11							52					
	12							53					
	13							54					
	14							55					
	15							56					
	16							57					
	17							58					
	18							59					
	19							60					
	20							61					
	21							62					
	22							63					
	23							64					
	24							65					
	25							66					
	26							67					
	27							68					
	28							69					
	29							70					
	30							71					
	31							72					
	32							73					
	33							74					
	34							75					
	35							76					
	36							77					
	37							78					
	38							79					
	39							80					
	40							81					
	41							82					

ACTIVE PAGE RECORD

SECTION	ORIG REL PAGE NO.	REV SYM	ADDED PAGES PAGE NO.	REV SYM	PAGE NO.	REV SYM	SECTION	ORIG REL PAGE NO.	REV SYM	ADDED PAGES PAGE NO.	REV SYM	PAGE NO.	REV SYM
	83												
	84												
	85												
	86												
	87												
	88												
	89												
	90												
	91												
	92												
	93												
	94												
	95												
	96												
	97												
	98												
	99												

BOEING NO. SECT PAGE

REV SYM

ABSTRACT

27288

This computer program calculates the additional thrust obtained by adding air, in a post-chamber mixing section, to the fuel-rich exhaust gases of a rocket engine. It may be used with a wide range of fuels composed of up to 15 elements. The following major assumptions are made: (1) complete mixing of the exhaust and the augmenting streams, (2) chemical equilibrium is achieved and (3) the augmenting stream is a perfect gas.

AUTHOR :

1.0 GENERAL INFORMATION

This program was written in FORTRAN II for the IBM 7094 computer. The chemical equilibrium section contains five FAP Subroutines.

1.1 Purpose

Initial interest in the concept of air augmentation at Boeing dates back to 1955; however, no computer programs are known to exist from the investigation during this period. Early in 1963, NASA awarded to The Boeing Company a contract for further study of the advantages to be gained from using atmospheric oxygen to gain additional thrust by combining air with the fuel-rich rocket exhaust in a post-chamber mixing section.

The work on this contract generated two computer programs. This particular program is designated "Air Augmented Rocket Program (1-D)"; the other program is designated "Air Augmented Rocket Power Plant Design Program" (AS 1927) and is described in reference 1.

The specific objectives of the one-dimensional program are detailed below:

1. Provide a fast, reliable program capable of isolating operational areas which warrant more definitive analysis.

2. Provide a tool for sensitivity studies which is self-contained, that is, a single program from rocket and stream input to thrust computations.

3. Generate data which could be used as input values for a more sophisticated program.

4. Provide a capability for evaluating the advantages to be gained by adding fuel to the augmenting air stream.

5. Provide a wide choice of fuels and exhaust species.

1.2 Assumptions

The following assumptions are made in translating the physical system into a workable mathematical model:

1. All streams are homogeneous.

2. The augmenting stream is a perfect gas.

3. Specific heat (C_p) is constant.

4. Chemical equilibrium is achieved.

5. Complete mixing of the exhaust and augmenting streams takes place.

1.2 Assumptions (Continued)

6. The pressure and area of the mixing section (see figure 1, page 8) vary linearly; the integral term of the momentum equation is calculated as an average value.

7. Combustion and expansion are perfect adiabatic and isentropic processes respectively.

1.3 Limitations

The assumption of complete mixing of the primary (rocket exhaust) and secondary (augmenting) streams constitutes the major departure of the mathematical model from the actual physical system. With the resulting abnormal increase in energy level, certain input combinations which are physically realistic fail to reach a solution in the program. These cases run successfully after the secondary flow rate is reduced or when the area of the mixing section is increased since both of these compromises with reality correct the "over-choked" condition in the mathematical model.

The program has no capability to describe the physical length of the actual system.

The chemical equilibrium section requires reasonably accurate initial estimates of the chemical species resulting from the mixing. This is more an inconvenience than a limitation.

The chemical equilibrium section has the following temperature range: (360-10,800^{o}R) (200 - 6000°K)

1.4 Recommendations

The program would be more accurate if a preliminary section actually calculated the rocket output values from the basic input values of fuel composition, pressure, enthalpy, area ratio and mass flow rate. Consideration should be given to incorporating this change in subsequent versions of the program.

A more realistic solution could be obtained if, instead of assuming complete mixing, there were three separate after-streams. One of these would be unmixed primary; the second would be unmixed secondary; and the third would be a perfect mixture of the two. The third, or mixed stream, would be defined by the percentages of the primary and secondary streams which would be allowed to combine. This modification would require an additional iteration step since three sets of momentum equations would have to be solved simultaneously.

Minor programming changes which would improve the program include:

1. Addition of an input control to specify whether the secondary stream is to be supersonic or subsonic. At present, two versions of subroutine EMESS exist, one for supersonic and one for subsonic.

1.4 Recommendations (Continued)

2. A test to prevent running "expansion only" cases for additional exhaust conditions whenever the augmentation solution itself fails.

2.0 PROCEDURE

2.1 Nomenclature

Math Symbol	Program Symbol	Description	Units
A	A	area	ft^2
a	ABLE	area ratio = $\frac{A_2}{(A_S + A_P)}$	-
$a_{subscript}$	-	sonic velocity	ft/sec
b	BAKER	pressure ratio = P_2/P_{REF}	-
CR	RDELTA	convergence criterion on R_I	BTU/°R
FA	FAAR	augmentation factor	-
FN	FN	net thrust	lbf
G	G	gravitational constant (32.2)	ft lbm/sec^2 lbf
H_{TOTAL}	H2STAG	stagnation enthalpy	BTU/lbm
H_{STATIC}	HVEL HEQUIL	static enthalpy	BTU/lbm
IS	SIAUG	augmented specific impulse	sec
ISR	SIR	rocket specific impulse	sec
$\dot{m}$	F	mass flow rate	lbm/sec
M	M	Mach number	-
MW	AMW	molecular weight	lbm/lb mole
P	P	pressure	lbf/ft^2
R_I	RINEW	gas constant ($R_I = R_0 \div MW$)	BTU/lbm°R
R_0	RZERO	universal gas constant = 1.987	BTU/lb mole°R
T	T	temperature	°R
V	V	velocity	ft/sec

2.1 Nomenclature (Continued)

Math Symbol	Program Symbol	Description	Units
Y	YAR	reference pressure control	-
γ	GAMMA	specific heat ratio C_p/C_v	-
ρ	RHO	density	lbm/ft^3
Subscripts			
e	E	exhaust	
I	I	iteration	
P	P	rocket (primary flow) NOTE: Z is used as subscript for pressure and mass flow rate since PP and FP are variable names used in previously written subroutine CERP4)	
REF	REF	reference	
S	S	stream (secondary flow)	
SF	SB	secondary fuel	
X	X	reference station	
2	2	station 2	
∞	8	infinity	
Superscript			
o	0 (zero)	stagnation (Total)	

2.2 Method

The equations employed in constructing the mathematical model may be derived from the basic equations of continuity, momentum and energy; and from selected equations found in reference 2. The following derivations indicate by a dashed suffix, where applicable, the equation number assigned to this relationship in reference 2.

Equation of Continuity

$$\dot{m} = \rho_1 A_1 V_1 = \rho_2 A_2 V_2 \qquad (1)$$

2.2 Method (Continued)

Conservation of Momentum

$$P_1 A_1 + \frac{\dot{m}_1 V_1}{G} + P_2 A_2 + \frac{\dot{m}_2 V_2}{G} = P_3 A_3 + \frac{\dot{m}_3 V_3}{G} \qquad (2)$$

Energy Equation

$$H_{TOTAL} = H_{STATIC} + \frac{V^2}{2} \qquad (3)$$

NOTE: In equation 4-7 appropriate subscripts would be used to designate the region of interest in accordance with figure 1, page 8.

Temperature Ratio

$$\frac{T}{T^o} = \left(1 + \frac{\gamma-1}{2} M^2\right)^{-1} \qquad (4)-43$$

Pressure Ratio

$$\frac{P^o}{P} = \left(1 + \frac{\gamma-1}{2} M^2\right)^{\frac{\gamma}{\gamma-1}} \qquad (5)-44$$

Sonic Definitions

$$a_{subscript} = \sqrt{G \gamma R_1 T} \qquad (6a)$$

$$M = \frac{V}{a_{subscript}} \qquad (6b)$$

Equation of State

$$P = \rho R_1 T \qquad (7)$$

A schematic representation of the mathematical model is contained in figure 1, page 8. The computational method is explained in the following paragraphs.

Conditions in the augmenting stream may be determined if any two of the parameters P_S, A_S, $\dot{m}_S$, and M_S are defined. One exception exists; P and M may not be given. Similarly, $\dot{m}_S$ can be calculated by equation (1) if A_∞, P_∞ and V_∞ are given.

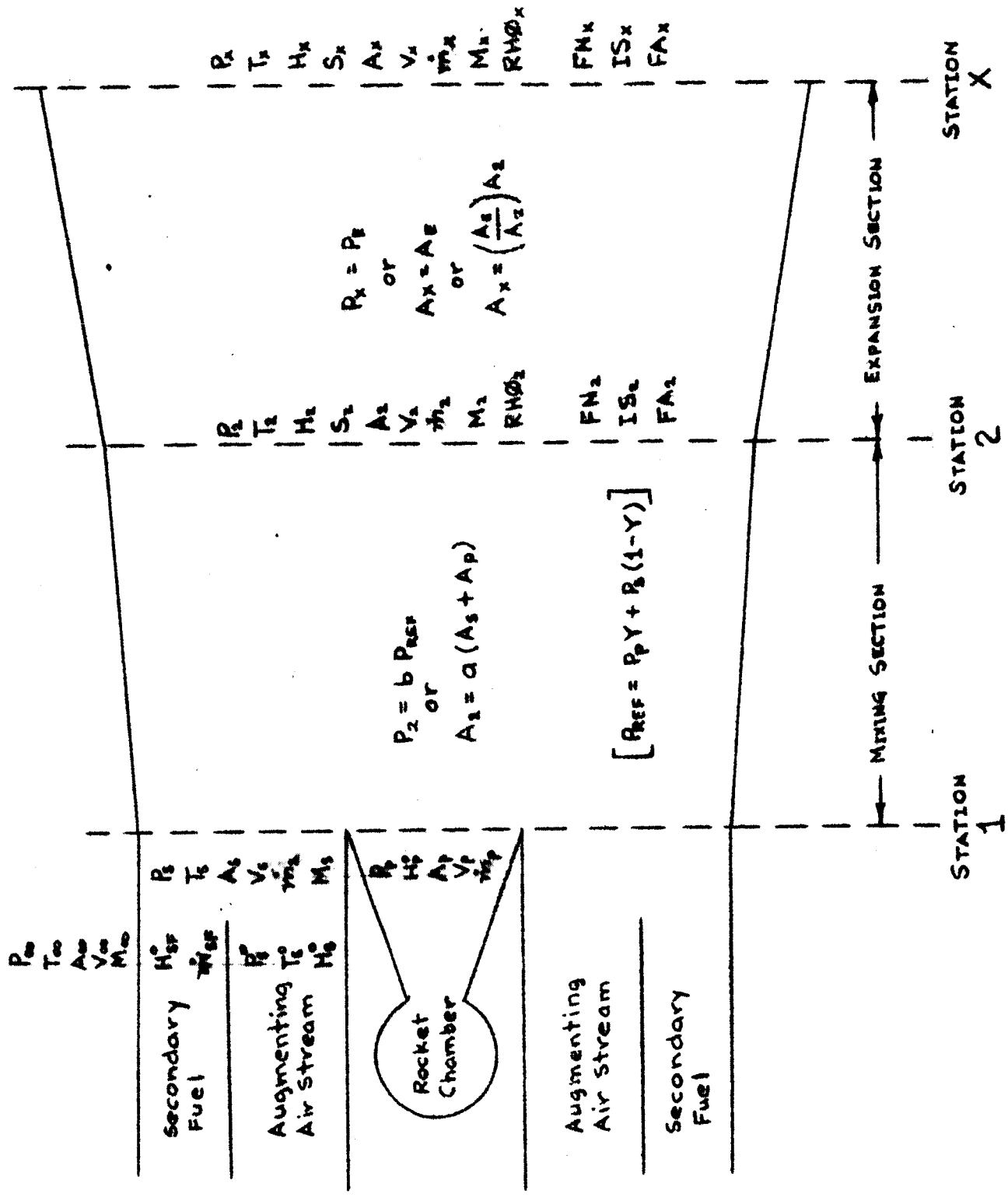

CALC			REVISED	DATE	FIGURE NO. 1	
CHECK					SCHEMATIC DIAGRAM	AS 1961
APR						
APR					BOEING AIRPLANE COMPANY	PAGE 8

U3 4038 8000 (WAS BAC 1017 R5)

2-7000

2.2 Method (Continued)

Equation (5) may be solved for Mach number:

$$M_S = \left[\frac{P_S^{o\,\frac{\gamma-1}{\gamma}} - P_S^{\frac{\gamma-1}{\gamma}}}{\frac{\gamma-1}{2} P_S^{\frac{\gamma-1}{\gamma}}} \right]^{1/2} \tag{8}$$

A relationship for calculating either A_S or $\dot{m}_S$ in terms of M_S, P_S^o and T_S^o may be developed as follows:

$$A_S = \frac{\dot{m}_S}{\rho_S V_S} \qquad \text{(From equation one)}$$

Substituting in the denominator

$$\rho_S V_S = \frac{V_S P_S}{R_I T_S} = \frac{M_S \sqrt{G \gamma R_I T_S}\; P_S}{R_I T_S} = M_S P_S \left(\frac{G \gamma}{R_I T_S} \right)^{1/2}$$

and using equations (4) and (5) to convert P_S and T_S to P_S^o and T_S^o yields

$$A_S = \dot{m}_S \left[P_S^o \left(\frac{G \gamma}{R_I T_S^o} \right)^{1/2} \frac{M_S}{\left(1 + \frac{\gamma-1}{2} M_S^2\right)^{\frac{\gamma+1}{2(\gamma-1)}}} \right]^{-1} \tag{9a}$$

Equation (9a) may also be used to find a solution for M_S in terms of A_S, $\dot{m}_S$, P_S^o and T_S^o. Subroutine EMESS solves, by iteration, the equation

$$M_S = \frac{\dot{m}_S \left(1 + \frac{\gamma-1}{2} M_S^2\right)^{\frac{\gamma-1}{2(\gamma-1)}}}{A_S \left(\frac{G\gamma}{R_I T_S^o} \right)^{1/2}} \tag{9b}$$

2.2 Method (Continued)

Using equation (4), V_S may be calculated by:

$$T_S = T_S^{\,o} \left(1 + \frac{\gamma-1}{2} M_S^{\,2}\right)^{-1} \qquad \text{(From equation 4)}$$

$$M_S^{\,2} = \frac{2}{\gamma-1} \left(\frac{T_S^{\,o} - T_S}{T_S} \right)$$

Substituting this relationship in the equation

$$V^2 = M^2 a^2 \qquad (6b)$$

yields:

$$V_S^{\,2} = \frac{2\, a_S^{\,2}}{\gamma-1} \left(\frac{T_S^{\,o} - T_S}{T_S} \right) = \frac{2(T_S^{\,o} - T_S)}{\gamma-1} \left(\frac{a_S^{\,2}}{T_S} \right)$$

$$V_S = \left[\frac{2(T_S^{\,o} - T_S)}{\gamma-1} \; \frac{\gamma R_1}{G} \right]^{1/2} \qquad (10)$$

All stream conditions are now defined.

In order to permit defining a variable area duct in the mixing section (Figure 1) three controls are required. The value of Y determines whether P_P or P_S shall be used as the reference pressure as follows:

$$P_{REF} = P_P\, Y + P_S\, (1.0 - Y) \qquad (11)$$

Thus when Y = 0, P_S is the reference pressure; and when Y = 1, P_P is the reference pressure. The control "a" defines an area ratio as $A_2 = a(A_S + A_P)$ and the control "b" defines a pressure ratio as $P_2 = b\, P_{REF}$. "Y" and either "a" or "b" are required inputs.

With a mixing duct having variable area the momentum equation (2) must be written:

$$P_S A_S + \frac{\dot{m}_S V_S}{G} + P_P A_P + \frac{\dot{m}_P V_P}{G} \int_1^2 P\, dA = P_2 A_2 + \frac{(\dot{m}_S \dot{m}_P) V_2}{G} \qquad (12a)$$

Assuming P dA to vary linearly between stations 1 and 2 (see figure 1, page 8), then

2.2 Method (Continued)

$$\int_1^2 P\, dA = \frac{P_{REF} + P_2}{2} \left[A_2 - (A_S + A_P)\right]$$

The momentum equation, therefore, becomes

$$P_S A_S + \frac{\dot{m}_S V_S}{G} + P_P A_P + \frac{\dot{m}_P V_P}{G} + \frac{P_{REF} + P_2}{2}\left[A_2 - (A_S + A_P)\right] = P_2 A_2 + \frac{(\dot{m}_S + \dot{m}_P) V_2}{g} \tag{12b}$$

and the continuity equation becomes

$$\dot{m}_S + \dot{m}_P = \rho_2 A_2 V_2 = \rho_2 A_2 a(A_S + A_P) \tag{13}$$

The continuity and momentum equations may now be solved to define A_2 and P_2.

When "a" is given:

$$A_2 = a(A_S + A_P) \tag{14}$$

$$P_2 = \frac{P_S A_S + P_P A_P + \frac{\dot{m}_S V_S}{G} + \frac{\dot{m}_P V_P}{G} - \frac{(\dot{m}_S + \dot{m}_P) V_2}{G} + A_2 - (A_S + A_P)\frac{P_{REF}}{2}}{\frac{A_2 + A_S + A_P}{2}} \tag{15}$$

When "b" is given:

$$P_2 = b\, P_{REF} \tag{16}$$

$$A_2 = \frac{P_S A_S + P_P A_P + \frac{\dot{m}_S V_S}{G} + \frac{\dot{m}_P V_P}{G} - \frac{(\dot{m}_S + \dot{m}_P) V_2}{G} - \frac{(A_S + A_P)(P_{REF} + P_2)}{2}}{\frac{P_2 - P_{REF}}{2}} \tag{17}$$

2.2 Method (Continued)

A special case exists when b = 1; V_2 can be calculated directly as:

$$V_2 = \frac{\left[A_P(1 - Y) - Y P_S\right]\left[P_P - P_S\right] + \frac{\dot{m}_S V_S}{G} + \frac{\dot{m}_P V_P}{G}}{\frac{\dot{m}_S + \dot{m}_P}{G}} \qquad (18)$$

Although minor differences exist when "b" is given, the general computational method is as follows (see Flow Chart No. 1, Figure 2, for these differences):

A. Assume a value of V_2 (VGESS input).

B. Calculate ρ_2 using equation (13).

C. Calculate P_2 using equation (15).

D. Calculate R_I (Initially R_I equals R_0 divided by the MW from input card set No. 5)

E. Calculate T_I using equation (7).

F. Compute chemical equilibrium and calculate thermodynamic properties using Boeing EQUIL Subroutine.

G. Iterate between steps D and G until $|R_I - R_{I+1}| \leq CR$. Proceed to step H when the convergence criterion is satisfied.

H. Compute static enthalpy of system by using equation (3).

$$H_{STAT} = H_{TOTAL} - \frac{V^2}{2}$$

Iterate between steps B and H until H_{STAT} is equal to H_{EQUIL} (Static enthalpy computed by subroutine EQUIL). Successive estimates of V_2 are computed by the false position method. Proceed to step I when the convergence criterion is satisfied.

I. A_2 and ρ_2 may be calculated fromthe state and continuity equations; thus all conditions at station 2 (Figure 1) are known.

Provision is made for expansion through an exhaust nozzle which may be defined by an exhaust pressure (P_e), and exhaust area (A_e) or an exhaust area-ratio (A_e/A_2). Subroutine EQUIL is used to perform an isentropic expansion from station No. 2 to station No. X (Figure 1). An expansion to an area or an area-ratio requires the use of an iteration process. All thermodynamic properties are calculated.

2.2 Method (Continued)

Total net thrust is calculated at stations No. 2 and No. X as follows:

$$FN_X = \frac{\dot{m}_2}{G} V_X - \frac{m_S V_\infty}{G} + A_X(P_X - P_\infty) \tag{19}$$

Augmented specific impulse is defined as

$$IS_X = \frac{FN_X}{\dot{m}_P} \tag{20}$$

Augmentation factor is defined as

$$FA_X = \frac{IS_X}{ISR} \tag{21}$$

The program was recently modified to permit addition of fuel to the secondary stream.

The momentum equation (12b) becomes

$$P_S A_S + \frac{\dot{m}_S V_S}{G} + P_P A_P + \frac{\dot{m}_P V_P}{G} + \frac{P_{REF} + P_2}{2} A_2 - (A_S + A_P)$$

$$= P_2 A_2 + \frac{(\dot{m}_S + \dot{m}_{SF} + \dot{m}_P) V_2}{G} \tag{22}$$

Similarly, the stagnation enthalpy of the system is calculated as the summation of the specific enthalpies of the rocket exhaust, augmenting stream and secondary fuel multiplied by their respective weight fractions of the total mass flow.

$$H_{TOTAL} = \frac{\dot{m}_S H_S^{\circ} + \dot{m}_{SF} H_{SF}^{\circ} + \dot{m}_P H_P^{\circ}}{\dot{m}_S + \dot{m}_{SF} + \dot{m}_P} \tag{23}$$

2.3 Results

The computed results agree within approximately ten percent with similar data calculated by the more sophisticated program described in reference 1 and with check calculations based on Mollier diagrams of the mixture.

2.4 References

1. Savage, Larry E., Air Augmented Rocket Power Plant Design Program, Applied Mathematics Information Center reference number AS 1927, The Boeing Company, Not Yet Released

2. Ames Research Staff, Equations, Tables, and Charts for Compressible Flow, NACA Report No. 1135, 1953

3.0 INPUT PREPARATION AND OUTPUT DESCRIPTION

3.1 Input Data Preparation

The input data may be divided into four convenient subsections.

Subsection 1 comprises card set No. 0 which indicates, for case stacking facility, which card set follows.

Subsection 2 comprises card set No. 1 which describes the chemistry of the system.

Subsection 3 comprises card sets No. 2 through No. 6 which specify the aerothermodynamics of the system.

Subsection 4 comprises card set No. 7 which identifies a particular case.

3.1.1 Card Set No. 0 Format (I2)

This set consists of one card specifying NSET which is the card set to follow. This card is required for each case. All card sets equal to and greater than NSET must follow. See input data sheet No. 2, page 21.

3.1.2 Card Set No. 1

This set consists of three sub-sets which initialize the chemical equilibrium package (modified AS 1317). See input data sheet No. 1, page 20.

<u>Set 1-A</u> Format (9A6)

This subset identifies the computer run. It is used to specify such things as: missile, propellant, oxidizer, O/F ratio, customer, date, etc. Five title cards are required. The sixth card identifies the thermodynamic data master tape and <u>must</u> be exactly as shown on input data sheet No. 1. This title will appear only when card set No. 1 is read; individual cases are identified by card set No. 7.

<u>Set 1-B</u> Format (2A6, F16.0)

This sub-set defines the elemental chemical composition of the reactant. The first card of this set, COMPOSITION, identifies the set. The second card, FUEL, gives the mass of fuel (gms) present. The following cards give the elements comprising the fuel: Col. 1-2 chemical symbol, Col. 13-28 quantity present (ATOMS or ATOMIC RATIO).

The next card OXIDIZER, gives the mass of air (gms) in the secondary stream. The two following cards give the amounts of oxygen and nitrogen present in the air.

The next card BINDER, gives the mass of fuel (gms), if any, being added to the secondary stream. The following cards give the chemical composition of the fuel.

3.1.2 Card Set No. 1 (Continued)

The values specified on the FUEL, OXIDIZER and BINDER cards must total 100.0 grams. For actual runs the reactant ratios will be adjusted internally according to the mass flow rates given in CARD SETS 3 and 5.

The final card, LAST, terminates this subsection.

The total number of data cards in this sub-set is variable, and is dependent upon the number of elements constituting the fuel, oxidizer and binder.

Set 1-C Format (2A6, E16.0)

This set gives the initial estimates of mixture species. The first and seconds cards, ESTIMATES and CHAMBER, identify the card set.

The third card ALPHA estimates α which is defined as:

$$\alpha = \frac{P_2}{\Sigma N_{i_{gas}}}$$

where N_i is the number of moles of the ith gaseous species

The following cards give the specie estimates:

Col. 1-10 chemical symbol

Col. 11 blank - gaseous
L - liquid
S - solid

Col. 12 1 - element
2 - gaseous
3 - condensed

Col. 13-28 Quantity presents (MOLS or MOLS/MOL). If an exponential format is used the number must terminate in col. 28. (e.g. starting in col. 23: .10E-6). For ease in reading data cards it is suggested that a standard format, as shown on the sample input forms, be used.

The card LAST terminates this sub-set and the card EXECUTE causes the program to initialize the thermo-chemical subroutines.

The total number of data cards in this sub-set is variable, depending upon the number of specie estimates given. The more complex reactants, and those having condensed products of combustion, require a more accurate estimate of the species which result from mixing the streams. One data card is required for each species estimate.

3.1.3 Card Set No. 2 Format (8F10.0)

For examples of card sets No. 2 through No. 7 see input data sheet No. 2, page 21.

This card contains infrequently changed program controls, each in a 10 column field.

TGESS(^{o}R)	- Starting temperature (required only when b = 1.0)
VGESS(ft/sec)	- Estimated solution velocity (V_2) when AMODE ≠ 0. Starting velocity for profile when AMODE = 0. AMODE is as defined below.
VLIMIT(ft/sec)	- Upper limit of velocity profile.
GAMA	- γ of air-augmented system (ratio of specific heats (C_p/C_v).
AMODE	- 1.0 find subsonic solution 0.0 run velocity profile from VGESS to VLIMIT + 1.0 find supersonic solution
Y	Reference pressure control Y = 1.0 P_p is ref. press. Y = 0.0 P_s is ref. press.

3.1.4 Card Set No. 3 Format (8F10.0)

This card defines the rocket exhaust and the fuel, if any, being added to the secondary stream.

Columns 1-50 contain primary stream parameters P, H^o, A, $\dot{m}$ and V; each in a 10 column field. Columns 51-70 contain H^o and $\dot{m}$ of the fuel being added to the secondary stream.

NOTE: The parameters and units explained below apply, as appropriate, to card sets No. 3 through No. 6

A	area	ft^2
H^o	total enthalpy	Kcal/gm
$\dot{m}$	mass flow rate	lbm/sec (program label "F")
M	Mach number	-
P	pressure	lbf/ft^2
T	temperature	^{o}R
V	velocity	ft/sec

3.1.5 Card Set No. 4 Format (8F10.0)

This card defines the conditions at infinity and stagnation respectively. Columns 1-40 contain infinity conditions P, T, A, V and M. Columns 41-80 contain stagnation conditions P, T and H^o.

NOTE: 1) A_∞ may be omitted if $\dot{m}_S$ is given in card set No. 5.

2) Either V_∞ or M_∞ may be given.

3.1.6 Card Set No. 5 Format (8F10.0)

This card defines the augmenting air stream and certain frequently varied controls.

Columns 1-40 contain the stream parameters P, A, $\dot{m}$, and M. The secondary stream is sufficiently defined if any combination of two of these <u>except P and M</u> is given.

NOTE: $\dot{m}_S$ is defined with A_∞ is given in Card Set No. 4; therefore A_∞ with P, A or M also defines the stream.

Columns 41-60 contain the duct-defining parameters a(ABLE) and b(BAKER) respectively. "a" defines an area ratio as

$$a = \frac{A_2}{A_S + A_P}$$

"b" defines a pressure ratio as

$$b = \frac{P_2}{P_S(1.0 - Y) + P_P Y}$$ (see card set No. 2 for Y).

Columns 61-70 contain the estimated molecular weight of the mixture.

Columns 71-80 contain ΔV(VDELTA) which is the velocity interval when running a profile or the initial increment when iterating for a solution.

3.1.7 Card Set No. 6 Format (8F10.0)

After obtaining a solution at station 2 (see figure 1, page 8) the program performs an isentropic expansion of the gas mixture in order to calculate the conditions at the missile exit (station X). The exit may be defined in any of three ways: by an exit pressure (P_e), by an exit area (A_e), or by an area ratio (A_e/A_2).

The solution involves an iteration process when either the area or area-ratio are specified. The starting pressure for the iterative calculations is P_e and the initial pressure increment is ΔP both of which must be given when the exit is defined in terms of an area or area-ratio.

3.1.7 Card Set No. 6 (Continued)

Columns 1-40 contain P_e, A_e, A_e/A_2, and ΔP respectively; each in a 10 column field.

Columns 41-50 contain ISR, the specific impulse of the rocket engine.

3.1.8 Card Set No. 7 Format (10A6)

This card contains the title for this particular case.

3.1.9 Sample Cases

A total of seven sample cases are included. They were selected to demonstrate the various program options available to the user and are summarized in the following paragraph.

Case No.	NSET	Mode of Operation	Secondary Stream Definition	Mixing Section Definition	Exit Expansion Definition	Secondary Fuel
1	1	Profile	A_S & P_S	Y-0.0 a-1.4	-	-
2	2	Subsonic Sol.	A_S & $\dot{m}_S$	y-0.0 a-1.4	P-629.7	-
3	2	Supersonic Sol.	A_S & $\dot{m}_S$	Y-0.0 a-1.4	P-629.7	-
4	2	Supersonic Sol.	M_S & A_∞	Y-1.0 b-0.8	A/A-1.5	-
5	6	--	--	--	A/A1.75	-
6	2	Supersonic Sol.	A_S & $\dot{m}_S$	Y-0.0 b-1.0	A-4000.0	-
7	1	Supersonic Sol.	A_S & $\dot{m}_S$	Y-0.0 b-1.0	A-4000.0	YES

The data input sheets for cases 1 and 2 are given on pages 20, 21 and 22. A complete listing of the sample data deck is given on pages 23, 24 and 25.

3.2 Output Data

All program output is listed (printed) via the off-line printer.

3.2.1 Heading

The heading consists of three parts. Part one contains those items which we specified on DATA INPUT SHEET No. 1. (see paragraph 3.1.2) Part two gives the names, labels and units of the output variables. Part three prints out the rocket, stream and environmental conditions of the problem and program logic controls.

KEY PUNCH: Omit blank cards in sets 1-B & 1-C.
Punch all non-blank cards printed on form.

SET #1-A
Title

1 ... 50
Δ
SAMPLE CASES FØR AS-1961 DOCUMENT
Δ
LØX-RP1 FUEL Ø/F = 2.3 1-22-64
Δ
BINARY ΔΔØΔΔΔ1-25-61ΔΔΔΔJANAF Δ MASTER

Master Data Tape

SET #1-B
Elemental Chemical Composition

1	13
CØMPØSITIØN	Δ
FUEL	50.0
C	2.175
H	4.053
Ø	4.356
OXIDIZER	25.0
N	1.58
Ø	.42
BINDER	25.0
C	2.175
H	4.053
LAST	Δ

Sum must = 100.

SET #1-C
Estimated Species Products

Δ - Gaseous
S - Solid
L - Liquid

1 - Element
2 - Gaseous
3 - Cond.

1	11	12	14 ... 28
ESTIMATES	Δ	Δ	Δ
CHAMBER	Δ	Δ	Δ
ALPHA	Δ	Δ	0.287
H		1	0.02
C		1	0.1E-7
Ø		1	0.014
N		1	0.00002
H		2	0.5
H2Ø		2	0.3
ØH		2	0.3
Ø2		2	0.1
CØ		2	0.36
CØ2		2	0.72
N2		2	1.36
NØ		2	0.01
LAST	Δ	Δ	Δ
EXECUTE	Δ	Δ	Δ

Start in cc 28

Notes:

1. Composition is given in number of atoms.
2. Alpha = $P_2/\Sigma N_{i_{gas}}$
3. Estimates are given in MØLS or in MØLS/MØL.
4. Alphabetical "O" must be written "Ø"
5. Estimates using exponential format must end in column 28.
6. Secondary stream fuel, if present, must be entered into "Set 1-B BINDER".

CALC			REVISED	DATE	AIR AUGMENTED ROCKET	AS 1961
CHECK					INPUT DATA SHEET #1	7-23-63
APR					BOEING AIRPLANE COMPANY	PAGE 20
APR						

U3 4038 8000 (WAS BAC 1017 R5)

KEY PUNCH

1) * DO NOT PUNCH THIS LINE

2) BLANK CARD SETS SHOULD BE OMITTED.

CARD SET #0	CARD SET #4								CARD SET #5								CARD SET #6					CASE TITLE
N SET	P_∞	T_∞	A_∞	V_∞	M_∞	P_s°	T_s°	H_s°	P_s	A_s	$\dot{m}_s$	M	a	b	MW	ΔV	P_e	A_e	$\frac{A_e}{A_2}$	ΔP	I_{SR}	
* Col 1 2	Col 1	Col 11	Col 21	Col 31	Col 41	Col 51	Col 61	Col 71	Col 1	Col 11	Col 21	Col 31	Col 41	Col 51	Col 61	Col 71	Col 1	Col 11	Col 21	Col 31	Col 41	Col 1
1	629.7	411.8			1.62	2350.0	627.9	.0128	2000.0	1430.0			1.4		25.0	500.0						CASE 1 PROFILE A_s, P_s GIVEN. A=1.4

* NOTE: FOR CARD SET #1 SEE INPUT DATA SHEET #2 OR USE SAME CHEMICAL COMPOSITION AS USED IN CASE _____.

* CARD SET #2	T_{GESS}	V_{GESS}	V_{LIMIT}	GAMA	AMODE	Y	
*	Col 1	Col 11	Col 21	Col 31	Col 41	Col 51	Col 6
		1000.0	10000.	1.25	0.0	0.0	

* CARD SET #3	P_P	H_P°	A_P	$\dot{m}_P$	V_P	H_{SF}°	$\dot{m}_{SF}$
*	Col 1	Col 11	Col 21	Col 31	Col 41	Col 51	Col 61
	1899.4	-.1512	370.35	28253.0	4734.1		

AS-1961

DATA INPUT SHEET #2

KEY PUNCH

1) * DO NOT PUNCH THIS LINE

2) BLANK CARD SETS SHOULD BE OMITTED.

CARD SET #0	CARD SET #4								CARD SET #5								CARD SET #6					
N SET	P_∞	T_∞	A_∞	V_∞	M_∞	P_s°	T_s°	H_s°	P_s	A_s	$\dot{m}$	M_s	a	b	MW	ΔV	P_e	A_e	$\frac{A_e}{A_2}$	ΔP	I_{SR}	CASE TITLE
* Col 1 2	Col 1	Col 11	Col 21	Col 31	Col 41	Col 51	Col 61	Col 71	Col 1	Col 11	Col 21	Col 31	Col 41	Col 51	Col 61	Col 71	Col 1	Col 11	Col 21	Col 31	Col 41	Col 1
2	629.7	411.8	1010.0		1.62	2350.0	627.9	.0128		1430.0			1.4		25.0	300.0	629.7				331.9	CASE 2 SUB. SOL. AS, WS GIVEN

A=1.4 * EXPAND TO P

* NOTE: FOR CARD SET #1 SEE INPUT DATA SHEET #2 OR USE SAME CHEMICAL COMPOSITION AS USED IN CASE _____.

* CARD SET #2	TGESS	VGESS	VLIMIT	GAMA	AMODE	Y	
*	Col 1	Col 11	Col 21	Col 31	Col 41	Col 51	Col 6
		1000.0		1.25	-1.0		

* CARD SET #3	P_P	H_P°	A_P	$\dot{m}_P$	V_P	H_{SP}°	$\dot{m}_{SP}$
*	Col 1	Col 11	Col 21	Col 31	Col 41	Col 51	Col 61
	1844.4	-.1512	970.35	26283.0	9734.1		

AS-1961

DATA INPUT SHEET #2

```
*      DATA
 1

SAMPLE CASES FOR AS-1961 DOCUMENT

LOX-RP1 FUEL  O/F = 2.3     1-22-64

BINARY  0    1-25-61     JANAF MASTER
COMPOSITION
FUEL         50.0
C            2.175
H            4.053
O            4.356
OXIDIZER     25.0
N            1.58
O            .42
BINDER       25.0
C            2.175
H            4.053
LAST
ESTIMATES
CHAMBER
ALPHA          0.287
H            1 0.02
C            1          0.1E-7
O            1 0.014
N            1 0.00002
 2           2 0.5
 2O          2 0.3
OH           2 0.3
O2           2 0.1
CO           2 0.36
CO2          2 0.72
N2           2 1.36
NO           2 0.01
LAST
EXECUTE
            1000.0     10000.0    1.25       0          0
1899.4      -.1512     370.35     28253.0    9734.1
629.7       411.8                            1.62       2350.0     627.9      .0128
2000.0      1430.0                           1.4                   25.0       500.0
CASE 1  PROFILE      PS,AS GIVEN    A=1.4
 2
             1000.0                1.25       -1.0
1899.4      -.1512     370.35     28253.0    9734.1
629.7       411.8      1010.0                1.62       2350.0     627.9      .0128
            1430.0                           1.4                   25.0       300.0
629.7                                        331.9
CASE 2  SUB. SOL.    AS,WS GIVEN    A=1.4    EXPAND TO P
 2
            10000.0                1.25       1.0
1899.4      -.1512     370.35     28253.0    9734.1
629.7       411.8      1010.0                1.62       2350.0     627.9      .0128
            1430.0                           1.4                   25.0       300.0
629.7                                        331.9
```

```
CASE 3  SUPER SOL.  AS,WS GIVEN   A=1.4   EXPAND TO P
 2
          6000.0                  1.25      1.0       1.0
1899.4    -.1512    370.35    28253.0   9734.1
629.7     411.8     1010.0                1.62      2350.0    627.9     .0128
                                .40                 .80       25.0      300.0
1000.0              1.50      100.0     331.9
CASE 4  SUPER SOL.  MS,A8 GIVEN   B=.8    EXPAND TO A-RATIO
 6
1000.0              1.75      100.0     331.9
CASE 5  (SAME AS CASE 4 -- EXPANSION ONLY -- TO NEW RATIO)
 2
4500.0                        1.25      1.0
1899.4    -.1512    370.35    28253.0   9734.1
629.7     411.8                         1.62      2350.0    627.9     .0128
          1400.0    45000.0                         1.0       25.0
1000.0    4000.0              100.0     331.9
CASE 6  SUPER SOL.  AS,WS GIVEN   B=1.0   EXPAND TO A
 1
LOX-RP1
AIR AUGMENTED ROCKET
O/F = 2.30


BINARY  0   1-25-61    JANAF MASTER
COMPOSITION
FUEL        50.
            2.175
            4.053
O           4.356
OXIDIZER    25.
N           1.58
O            .42
BINDER1     25.
H            2.
LAST
ESTIMATES
CHAMBER
ALPHA        .287
H          1 .02
C          1           .10E-7
O          1 .014
N          1 .00002
H2         2 .5
H2O        2 .3
OH         2 .3
O2         2 .1
CO         2 .36
CO2        2 .72
N2         2 1.36
NO         2  .01
LAST
EXECUTE
 500.0                        1.25      1.0
1899.4    -.1512    370.35    28253.0   9734.1    -1.0      4500.0
```

```
629.7      411.8                                1.62       2350.0     627.9      .0128
           1400.0     45000.0                              1.0        25.0
000.0      4000.0                100.0      331.9
CASE 7  (SAME AS CASE 6 --ADD FUEL TO SECONDARY STREAM)
```

3.2.2 Intermediate Printout

As the solution proceeds the following variables are printed out after each successful convergence on R (See Flow Chart No. 1):

H - iteration counter on H convergence loop

R - iteration counter on R convergence loop

∞, MW, T_2, P_2, RHO_2, V_2, R_I, R_{I-1}

H_{VEL} - static enthalpy calculation by equation (3)

H_{EQUIL} - static enthalpy calculation by subroutine EQUIL

When a profile is being calculated the composition of the mixture (MOLS) is also printed. A profile is completed when VLIMIT is reached or whenever the temperature exceeds the allowable limits of subroutine EQUIL (360° - $10,800^oR$) (200° - 6000^oK).

The intermediate printout is in metric units as follows:

T - ^oK

P - atm

RHO - gms/cc

V - cm/sec

R - gm cm/gm mol^oK (RIOLD = R_{I-1}, RINEW = R_I)

H - Kcal/100 gms

3.2.3 Solution

The solution conditions are given for stations 2 and X (see figure 1). They include T, P, H, V, RHO, A, Mach No., Entropy (Kcal/^oK), IS and FA.

3.2.4 Sample Cases

The computer printout for the sample cases (1-7) is contained on pages 27 - 39.

```
ENTRY POINTS TO SUBROUTINES REQUESTED FROM LIBRARY,
     (STHM)      (FIL)       EXITX       (RET)       EXIT        (SPH)       (EFT)       EXP(3       LOG         (TSHM)
     (RTN)       EXP         (RWT)       (TSB)       (RLH)       (BST)       (FPT)       (SLI)       SQRT        (SLO)

CORE UNUSED FROM  37570   TO  40702 (OCT)

 CORE LOADING MAP

PROG      CHARFT    CERPP4    FMESS     MAINCH    MAINEQ    GAMMA     DESIGN    NOZZLE    CSTAR
ORIG       00144     00223     00734     01244     01314     01364     01434     01504     01554

PROG      MAINFR    ZENTRO    TRMATX    THPRSX    THVARX    THLOGX    THINPX    SHAPE     JCHECK
ORIG       01624     01674     01744     01767     02012     02035     02060     02103     02153

PROG      SHIFCP    EXTRA1    EXTRA2    SUMARY    AREA      SPEED     SETCON    CARD      CONST3
ORIG       02223     02277     02347     02417     02467     02537     02607     03042     03202

PROG      CALC      EQUIL     LIQSOL    DATAC     DATAH     DATAS     DATAQV    DATADF    ENTHA
ORIG       03402     03621     04110     04460     04561     04730     05066     05170     05504

PROG      ENTHO     TEST      INITIA    PART1     PART2     SYMTRY    SUMANP    DCOL      DCOL
ORIG       05561     05664     06056     06143     06313     06524     07021     07134     07264

PROG      ROW2      HS2       MATRIX    MAT1      DELTA     DELTA1    FORCE     FORCE1    DPALL
ORIG       07437     07734     10263     11010     11104     11143     11414     11613     12075

PROG      TRMAT     TRALLX    TRSINX    THRINX    WRLOC     FIRST     BOTHLS    ESTEEM    NSERCH
ORIG       12212     12370     12445     13113     13116     13121     13240     13743     13746

PROG      BINARY    SEARCI    FILLIN    NAMEX     LXCHAR    READIN    NESET     SETOPT    FORM
ORIG       14065     15126     16014     16270     16565     16616     17113     17536     17706

PROG      FORM1     DENSTY    VAPOR     SETSWT    EOFPRT    SETSWS    LISTSP    SAVES     RESET
ORIG       17722     20310     20420     20554     20613     21253     21337     22217     22341

PROG      *MAIN*    INEST     (FPT)     EXP(3     EXP       LOG       SQRT      (TSH)     (STH)
ORIG       22517     30632     31252     31322     31366     31455     31554     31641     31671

PROG      (SPH)     (TSB)     (BST)     (EFT)     (RWT)     (SLO)     (SLI)     (WER)     (RER)
ORIG       32152     32452     32560     32614     32633     32642     32657     32674     32773

PROG      (IOB)     (IOH)     (IOS)     (EXE)     EXIT      PRINTR    (IOU)     (TES)     SYSCO
ORIG       33050     34146     36300     36446     36642     36704     37113     37143     37144

PROG      (CLOS)    *OBUF*
ORIG       37247     37252

      BEGIN EXECUTION                                    TIME 09.667
LOX-RP1
AIR AUGMENTED ROCKET
O/F = 2.30


BINARY  0   1-25-61    JANAF MASTER
COMPOSITION
```

AS 196
Page 27

```
FUEL                50.000000000
C                    2.175000012
H                    4.052999973
O                    4.355999947
OXIDIZER            50.000000000
N                    1.579999998
O                    0.419999994
LAST                -0.
ESTIMATES
CHAMBER             -0.
ALPHA                0.286999993
H            1       0.013999996
C            1       0.000000007
O            1       0.013999999
N            1       0.000019997
H2           2       0.500000000
H2O          2       0.299999997
OH           2       0.299999997
O2           2       0.099999994
CO           2       0.359999999
CO2          2       0.719999999
N2           2       1.359999999
NO           2       0.009999998
LAST                -0.
EXECUTE
```

AIR AUGMENTED ROCKET PROGRAM

THE FOLLOWING PROGRAM LABELS AND UNITS APPLY,

PRESSURE	P	LBF/SQ-FT
TEMPERATURE	T	DEG R
ENTHALPY	H	BTU/LBM
ENTROPY	S	KCAL/DEG
AREA	A	SQ-FT
DENSITY	RHO	LBM/CU-FT
VELOCITY	V	FT/SEC
MASS FLOW RATE	F	LBM/SEC
GAS CONSTANT	R	BTU/LB-MOLE-DEG
MECH EQUIV OF T	J	FT-LBS/BTU
SPECIFIC T RATIO	GAMMA	
MACH NUMBER	M	

SUBSCRIPTS-

0 - STAGNATION
P - PROPELLANT
S - STREAM
2 - STATION 2 (SOLUTION)
X - EXHAUST
8 - INFINITY
SB - STREAM FUEL

CURRENT RUN

LOX-RP1
AIR AUGMENTED ROCKET
O/F = 2.30

CASE TITLE- CASE 1 PROFILE PS,AS GIVEN A=1.4

STARTING CONDITIONS

	P	T	H	A	V	F	GAMMA	M
PROPELLANT	1.8994E 03		-1.5120E-01	3.7035E 02	9.7341E 03	2.8253E 04	1.2500E 00	
STAG. AIR	2.3500E 03	6.2790E 02	1.2800E-02					
STREAM	2.0000E 03	5.9962E 02		1.4300E 03	5.8283E 02	5.2156E 04		4.8556E-01
INFINITY	6.2970E 02	4.1180E 02		-0.	1.6145E 03			1.6200E 00
STREAM FUEL			-0.			-0.		

ABLE	BAKER	Y	MODE	MW	ISR	PX	AEXP	AX/A2	V-DEL	P-DEL	VGUESS	VLIMIT	TGUESS
1.400	-0.	0.	0.	25.00	-0.	-0.	-0.	-0.	500.0	-0.	1000.	10000.	-0.

H	R	ALPHA	MW	T	P	RHO	V	RNEW	ROLD	HVEL	HEQUIL
1	3	0.73	29.67	1.733E 03	2.450E 00	5.108E-04	3.0480E 04	2.86E 03	2.86E 03	-5.5804E 00	-6.7975E 01
H			1.935756E-06	C	4.524306E-25	O	2.480018E-05				
N			1.610672E-11	H2	6.907708E-05	H2O	7.122677E-01				
OH			1.163961E-03	O2	1.149629E-01	CH	5.887547E-26				
CH2			2.095397E-22	CH3	1.831307E-23	CH4	2.404672E-23				
CHO			1.381642E-11	C2H2	4.266936E-31	C2H4	8.674233E-37				
CN			3.057978E-18	CO	2.617958E-04	CO2	7.648282E-01				
N2			1.774295E 00	NO	3.824266E-03	NH	1.265228E-11				
NH3			1.87563BE-11	CH2O	8.697479E-15	CHN	4.945584E-16				
NO2			6.608179E-06	N2O	2.688323E-07	C2N2	8.977003E-30				
NH2			3.013561E-12								
2	2	0.64	29.45	2.304E 03	2.180E 00	3.406E-04	4.5720E 04	2.88E 03	2.87E 03	-6.9530E 00	-4.3797E 01
H			8.948753E-04	C	9.440809E-17	O	2.171570E-03				
N			6.597710E-08	H2	5.337554E-03	H2O	6.971322E-01				
OH			1.963367E-02	O2	1.199317E-01	CH	1.146077E-17				
CH2			1.322468E-15	CH3	7.339370E-17	CH4	2.170823E-17				
CHO			6.675734E-08	C2H2	1.001163E-21	C2H4	6.008311E-27				
CN			2.124007E-12	CO	3.111296E-02	CO2	7.338790E-01				
N2			1.764697E 00	NO	1.857399E-02	NH	3.308219E-08				
NH3			4.289273E-09	CH2O	6.079649E-11	CHN	3.198600E-11				
NO2			1.161064E-05	N2O	1.166464E-06	C2N2	1.334862E-21				
NH2			3.468934E-09								
3	3	0.55	28.74	2.617E 03	1.909E 00	2.554E-04	6.0960E 04	2.95E 03	2.95E 03	-8.8745E 00	-2.0771E 01
H			8.364998E-03	C	7.393956E-14	O	1.345686E-02				
N			1.448908E-06	H2	2.286968E-02	H2O	6.562871E-01				
OH			5.876152E-02	O2	1.597203E-01	CH	7.722131E-15				
CH2			2.288224E-13	CH3	9.560253E-15	CH4	1.477811E-15				
CHO			1.024165E-06	C2H2	9.883383E-19	C2H4	7.034636E-24				
CN			1.951542E-10	CO	1.393605E-01	CO2	6.255871E-01				
N2			1.757134E 00	NO	3.768485E-02	NH	5.436879E-07				
NH3			2.304369E-08	CH2O	9.597398E-10	CHN	1.114022E-09				
NO2			1.760446E-05	N2O	2.177822E-06	C2N2	5.500952E-19				
NH2			3.737902E-08								

4	3	0.46	28.16	2.750E 03	1.639E 00	2.043E-04	7.6200E 04	3.01E 03	3.01E 03	-1.1345E 01	-6.1606E 00
H			1.955781E-02	C	7.590142E-13	O	2.833539E-02				
N			4.611989E-06	H2	3.792624E-02	H2O	6.204289E-01				
OH			8.940860E-02	O2	1.902069E-01	CH	7.036873E-14				
CH2			1.207104E-12	CH3	4.274999E-14	CH4	4.929954E-15				
CHO			2.375703E-06	C2H2	8.278857E-18	C2H4	5.516427E-23				
CN			8.799016E-10	CO	2.224779E-01	CO2	5.427253E-01				
N2			1.750881E 00	NO	5.020629E-02	NH	1.462059E-06				
NH3			3.664251E-08	CH2O	2.113616E-09	CHN	3.340958E-09				
NO2			2.077825E-05	N2O	2.661170E-06	C2N2	3.413763E-18				
NH2			8.104248E-08								
5	2	0.38	28.06	2.749E 03	1.369E 00	1.703E-04	9.1440E 04	3.02E 03	3.02E 03	-1.4365E 01	-4.6800E 00
H			2.206872E-02	C	8.537344E-13	O	3.134283E-02				
N			5.017031E-06	H2	4.047819E-02	H2O	6.144655E-01				
OH			9.353128E-02	O2	1.952462E-01	CH	7.474679E-14				
CH2			1.214507E-12	CH3	4.063222E-14	CH4	4.430410E-15				
CHO			2.354999E-06	C2H2	7.887973E-18	C2H4	4.683354E-23				
CN			9.074872E-10	CO	2.343436E-01	CO2	5.306544E-01				
N2			1.750580E 00	NO	5.079073E-02	NH	1.502498E-06				
NH3			3.365007E-08	CH2O	1.977677E-09	CHN	3.260588E-09				
NO2			1.944359E-05	N2O	2.455718E-06	C2N2	3.043594E-18				
NH2			7.870359E-08								
6	3	0.31	28.54	2.615E 03	1.098E 00	1.460E-04	1.0668E 05	2.97E 03	2.97E 03	-1.7933E 01	-1.7661E 01
H			1.222024E-02	C	1.100286E-13	O	1.831882E-02				
N			1.883198E-06	H2	2.834826E-02	H2O	6.444265E-01				
OH			6.785248E-02	O2	1.722594E-01	CH	9.714238E-15				
CH2			2.450689E-13	CH3	8.662352E-15	CH4	1.135226E-15				
CHO			1.034294E-06	C2H2	9.251493E-19	C2H4	4.692467E-24				
CN			2.221053E-10	CO	1.678448E-01	CO2	5.973357E-01				
N2			1.750488E 00	NO	3.899884E-02	NH	5.978642E-07				
NH3			1.819524E-08	CH2O	8.184543E-10	CHN	1.076953E-09				
NO2			1.437664E-05	N2O	1.702665E-06	C2N2	4.138206E-19				
NH2			3.480485E-08								
7	3	0.24	29.33	2.315E 03	8.278E-01	1.277E-04	1.2192E 05	2.89E 03	2.89E 03	-2.2051E 01	-4.1423E 01
H			1.984128E-03	C	3.002099E-16	O	3.901064E-03				
N			1.211831E-07	H2	8.841699E-03	H2O	6.898657E-01				
OH			2.448653E-02	O2	1.285921E-01	CH	2.792761E-17				
CH2			2.351485E-15	CH3	9.945633E-17	CH4	2.208880E-17				
CHO			8.868235E-08	C2H2	1.765624E-21	C2H4	6.339677E-27				
CN			3.817744E-12	CO	5.101548E-02	CO2	7.145285E-01				
N2			1.768168E 00	NO	1.967550E-02	NH	4.628928E-08				
NH3			3.409175E-09	CH2O	6.232324E-11	CHN	4.265265E-11				
NO2			7.720002E-06	N2O	7.594494E-07	C2N2	1.454647E-21				
NH2			3.478674E-09								
8	3	0.17	29.66	1.773E 03	5.573E-01	1.135E-04	1.3716E 05	2.86E 03	2.86E 03	-2.6717E 01	-6.6439E 01
H			1.022333E-05	C	1.147731E-23	O	7.751115E-05				
N			7.182079E-11	H2	2.151901E-04	H2O	7.114167E-01				
OH			2.173609E-03	O2	1.145409E-01	CH	1.030456E-24				
CH2			1.857530E-21	CH3	1.080513E-22	CH4	8.575120E-23				
CHO			4.380071E-11	C2H2	6.566352E-30	C2H4	7.081471E-36				
CN			2.209376E-17	CO	8.525015E-04	CO2	7.641004E-01				
N2			1.773786E 00	NO	4.405235E-03	NH	3.760204E-11				
NH3			2.145387E-11	CH2O	1.979462E-14	CHN	1.992242E-15				
NO2			3.310787E-06	N2O	1.466280E-07	C2N2	5.123226E-29				

```
NH2          5.767924E-12
FORCE1 REDUCED SUM TO   29.9416 PCT TO   1.58964096E-01

 9  1   0.09  29.67     1.014E 03  2.869E-01  1.022E-04  1.5240E 05     2.86E 03  2.86E 03   -3.1933E 01 -9.2391E 01
H            3.442707E-13     C            0.                O            2.783561E-10
N            2.885168E-21     H2           9.414231E-10      H2O          7.127205E-01
OH           6.759048E-07     O2           1.168204E-01      CH           0.
CH2          0.               CH3          0.                CH4          0.
CHO          5.225556E-22     C2H2         0.                C2H4         0.
CN           1.402763E-34     CO           7.418080E-10      CO2          7.649484E-01
N2           1.775966E 00     NO           4.434056E-05      NH           3.914013E-21
NH3          1.779254E-18     CH2O         6.828567E-26      CHN          1.197295E-29
NO2          4.478433E-07     N2O          1.458758E-09      C2N2         0.
NH2          4.785746E-21
COULD NOT FIND INITIAL SUMF AT NHS  =   0
FORCE1 REDUCED SUM TO    3.3430 PCT TO   1.15541734E 01
FORCE1 REDUCED SUM TO   73.8064 PCT TO   8.52461052E 00
FORCE1 REDUCED SUM TO   88.3948 PCT TO   7.50009656E 00

NEWTON-RAPHSON METHOD FAILS TO CONVERGE

NEWTON-RAPHSON METHOD FAILS TO CONVERGE

NEWTON-RAPHSON METHOD FAILS TO CONVERGE

NEWTON-RAPHSON METHOD FAILS TO CONVERGE

NEWTON-RAPHSON METHOD FAILS TO CONVERGE

CERPP-4 DID NOT CONVERGE T=  0.6394790E 02   P=  0.1644598E-01
```

CASE TITLE- CASE 2 SUB. SOL. AS,WS GIVEN A=1.4 EXPAND TO P

STARTING CONDITIONS

	P	T	H	A	V	F	GAMMA	M
PROPELLANT	1.8994E 03		-1.5120E-01	3.7035E 02	9.7341E 03	2.8253E 04	1.2500E 00	
STAG. AIR	2.3500E 03	6.2790E 02	1.2800E-02					
STREAM	2.0799E 03	6.0637E 02		1.4300E 03	5.0859E 02	4.6781E 04		4.2135E-01
INFINITY	6.2970E 02	4.1180E 02		1.0100E 03	1.6145E 03			1.6200E 00
STREAM FUEL			-0.			-0.		

ABLE	BAKER	Y	MODE	MW	ISR	PX	AEXP	AX/A2	V-DEL	P-DEL	VGUESS	VLIMIT	TGUESS
1.400	-0.	-0.	-1.0	25.00	331.9	629.70	-0.	-0.	300.0	-0.	1000.	-0.	-0.

M	R	ALPHA	MW	T	P	RHO	V	RNEW	ROLD	RVEL	REQUIL
1	3	0.73	29.72	1.878E 03	2.473E 00	4.767E-04	3.0480E 04	2.85E 03	2.85E 03	-5.9932E 00	-7.0243E 01
2	3	0.69	29.51	2.276E 03	2.322E 00	3.667E-04	3.9624E 04	2.87E 03	2.87E 03	-6.7508E 00	-5.2394E 01
3	3	0.63	28.91	2.565E 03	2.171E 00	2.979E-04	4.8768E 04	2.93E 03	2.93E 03	-7.7061E 00	-3.1957E 01
4	3	0.57	28.15	2.759E 03	2.019E 00	2.509E-04	5.7912E 04	3.01E 03	3.01E 03	-8.8590E 00	-1.2160E 01
5	2	0.56	28.04	2.785E 03	1.995E 00	2.448E-04	5.9353E 04	3.03E 03	3.02E 03	-9.0587E 00	-9.0040E 00
6	1	0.56	28.02	2.785E 03	1.996E 00	2.449E-04	5.9329E 04	3.03E 03	3.02E 03	-9.0554E 00	-9.0661E 00
7	1	0.56	28.02	2.785E 03	1.996E 00	2.449E-04	5.9333E 04	3.03E 03	3.02E 03	-9.0559E 00	-9.0551E 00

SOLUTION OBTAINED

	PRESSURE	TEMPERATURE	ENTHALPY	VELOCITY	DENSITY	AREA	MACH. NO.	ENTROPY
STA. 2	4.2234E 03	5.0129E 03	-1.6299E 02	1.9467E 03	1.5288E-02	2.5239E 03	5.8366E-01	2.4261E-01
EXHAUST	6.2970E 02	4.2073E 03	-7.7322E 02	5.8879E 03	2.8123E-03	4.5302E 03	1.9620E 00	2.4261E-01

STATION =2			EXHAUST		
NET THRUST	IS AUG.	AUG. FACTOR	NET THRUST	IS AUG.	AUG. FACTOR
1.126E 07	3.982E 02	1.200E 00	1.139E 07	4.026E 02	1.213E 00

CASE TITLE- CASE 3 SUPER SOL, AS,WS GIVEN A=1.4 EXPAND TO P

STARTING CONDITIONS

	P	T	H	A	V	F	GAMMA	M
PROPELLANT	1.8994E 03		-1.5120E-01	3.7035E 02	9.7341E 03	2.8253E 04	1.2500E 00	
STAG. AIR	2.3500E 03	6.2790E 02	1.2800E-02					
STREAM	2.0799E 03	6.0637E 02		1.4300E 03	5.0859E 02	4.6781E 04		4.2135E-01
INFINITY	6.2970E 02	4.1180E 02		1.0100E 03	1.6145E 03			1.6200E 00
STREAM FUEL			-0.			-0.		

ABLE	BAKER	Y	MODE	HW	ISR	PX	AEXP	AX/A2	V-DEL	P-DEL	VGUESS	VLIMIT	TGUESS
1.400	-0.	-0.	1.0	25.00	331.9	629.70	-0.	-0.	300.0	-0.	10000.	-0.	-0.

M	R	ALPHA	MW	T	P	RHO	V	RNEW	ROLD	HVEL	HEQUIL
1	3	0.14	29.72	1.726E 03	4.545E-01	9.534E-05	1.5240E 05	2.85E 03	2.85E 03	-3.2346E 01	-7.5858E 01
2	2	0.18	29.54	2.155E 03	6.059E-01	1.014E-04	1.4326E 05	2.87E 03	2.86E 03	-2.9150E 01	-5.7318E 01
3	3	0.22	28.92	2.462E 03	7.573E-01	1.083E-04	1.3411E 05	2.93E 03	2.93E 03	-2.6153E 01	-3.6071E 01
4	3	0.24	28.48	2.588E 03	8.396E-01	1.125E-04	1.2914E 05	2.98E 03	2.98E 03	-2.4607E 01	-2.4212E 01
5	1	0.24	28.50	2.582E 03	8.364E-01	1.123E-04	1.2933E 05	2.98E 03	2.98E 03	-2.4665E 01	-2.4809E 01
6	1	0.24	28.49	2.584E 03	8.373E-01	1.124E-04	1.2928E 05	2.98E 03	2.98E 03	-2.4649E 01	-2.4645E 01

SOLUTION OBTAINED

	PRESSURE	TEMPERATURE	ENTHALPY	VELOCITY	DENSITY	AREA	MACH. NO.	ENTROPY
STA. 2	1.7720E 03	4.6505E 03	-4.4360E 02	4.2417E 03	7.0164E-03	2.5239E 03	1.3315E 00	2.4291E-01
EXHAUST	6.2970E 02	4.2217E 03	-7.6064E 02	5.8336E 03	2.8003E-03	4.5920E 03	1.9398E 00	2.4291E-01

STATION =2			EXHAUST		
NET THRUST	IS AUG.	AUG. FACTOR	NET THRUST	IS AUG.	AUG. FACTOR
1.043E 07	3.688E 02	1.111E 00	1.126E 07	3.981E 02	1.200E 00

CASE TITLE- CASE 4 SUPER SOL. MS,AB GIVEN B=.8 EXPAND TO A-RATIO

STARTING CONDITIONS

	P	T	H	A	V	F	GAMMA	M
PROPELLANT	1.8994E 03		-1.5120E-01	3.7035E 02	9.7341E 03	2.8253E 04	1.2500E 00	
STAG. AIR	2.3500E 03	6.2790E 02	1.2800E-02					
STREAM	2.1047E 03	6.0843E 02		1.4904E 03	4.8364E 02	4.6781E 04		4.0000E-01
INFINITY	6.2970E 02	4.1180E 02		1.0100E 03	1.6145E 03	*		1.6200E 00
STREAM FUEL			-0.			-0.		

ABLE	BAKER	Y	MODE	MW	ISR	PX	AEXP	AX/A2	V-DEL	P-DEL	VGUESS	VLIMIT	TGUESS
-0.	0.800	1.0	1.0	25.00	331.9	1000.00	-0.	1.500	300.0	100.000	6000.	-0.	-0.

H	R	ALPHA	MW	T	P	RHO	V	RNEW	ROLD	HVEL	HEQUIL
1	4	0.20	27.70	2.727E 03	7.180E-01	8.879E-05	1.3716E 05	3.06E 03	3.06E 03	-2.7130E 01	-6.0731E 00
2	4	0.13	18.10	4.199E 03	7.180E-01	3.763E-05	1.4630E 05	4.69E 03	4.69E 03	-3.0193E 01	2.8038E 02
3	5	0.20	27.72	2.725E 03	7.180E-01	8.879E-05	1.3716E 05	3.06E 03	3.07E 03	-2.7130E 01	-6.3543E 00
4	3	0.20	28.55	2.555E 03	7.180E-01	9.771E-05	1.3650E 05	2.97E 03	2.97E 03	-2.6918E 01	-2.6587E 01
5	1	0.21	28.56	2.551E 03	7.180E-01	9.787E-05	1.3649E 05	2.97E 03	2.97E 03	-2.6915E 01	-2.7023E 01
6	1	0.21	28.56	2.552E 03	7.180E-01	9.783E-05	1.3650E 05	2.97E 03	2.97E 03	-2.6915E 01	-2.6915E 01

SOLUTION OBTAINED

	PRESSURE	TEMPERATURE	ENTHALPY	VELOCITY	DENSITY	AREA	MACH. NO.	ENTROPY
STA. 2	1.5195E 03	4.5943E 03	-4.8446E 02	4.4784E 03	6.1075E-03	2.7463E 03	1.4160E 00	2.4309E-01
EXHAUST	7.5448E 02	4.3050E 03	-6.9981E 02	5.5635E 03	3.2787E-03	4.1123E 03	1.8288E 00	2.4309E-01

STATION =2			EXHAUST		
NET THRUST	IS AUG.	AUG. FACTOR	NET THRUST	IS AUG.	AUG. FACTOR
1.054E 07	3.728E 02	1.123E 00	1.114E 07	3.940E 02	1.187E 00

CASE TITLE- CASE 5 (SAME AS CASE 4 -- EXPANSION ONLY -- TO NEW RATIO)

STARTING CONDITIONS

	P	T	H	A	V	F	GAMMA	M
PROPELLANT	1.8994E 03		-1.5120E-01	3.7035E 02	9.7341E 03	2.8253E 04	1.2500E 00	
STAG. AIR	2.3500E 03	6.2790E 02	1.2800E-02					
STREAM	2.1047E 03	3.3801E 02		1.4904E 03	1.4741E 04	4.6781E 04		4.0000E-01
INFINITY	6.2970E 02	4.1180E 02		1.0100E 03	1.6145E 03			1.6200E 00
STREAM FUEL			-0.			-0.		

ABLE	BAKER	Y	MODE	MW	ISR	PX	AEXP	AX/A2	V-DEL	P-DEL	VGUESS	VLIMIT	TGUESS
-0.	0.800	1.0	1.0	25.00	331.9	594.52	4805.9974	1.750	300.0	0.047	6000.	-0.	-0.

SOLUTION OBTAINED

	PRESSURE	TEMPERATURE	ENTHALPY	VELOCITY	DENSITY	AREA	MACH. NO.	ENTROPY
STA. 2	1.5195E 03	4.5943E 03	-4.8446E 02	4.4784E 03	6.1075E-03	2.7433E 03	1.3248E 00	2.4309E-01
EXHAUST	5.9452E 02	4.2069E 03	-7.6935E 02	5.8712E 03	2.6542E-03	4.8085E 03	1.9561E 00	2.4309E-01

STATION -2			EXHAUST		
NET THRUST	IS AUG.	AUG. FACTOR	NET THRUST	IS AUG.	AUG. FACTOR
1.053E 07	3.728E 02	1.123E 00	1.117E 07	3.952E 02	1.191E 00

CASE TITLE- CASE 6 SUPER SOL. AS,WS GIVEN B=1.0 EXPAND TO A

STARTING CONDITIONS

	P	T	H	A	V	F	GAMMA	M
PROPELLANT	1.8994E 03		-1.5120E-01	3.7035E 02	9.7341E 03	2.8253E 04	1.2500E 00	
STAG. AIR	2.3500E 03	6.2790E 02	1.2800E-02					
STREAM	2.0907E 03	6.0727E 02		1.4000E 03	4.9785E 02	4.5000E 04		4.1215E-01
INFINITY	6.2970E 02	4.1180E 02		9.7155E 02	1.6145E 03			1.6200E 00
STREAM FUEL			-0.			-0.		

ABLE	BAKER	Y	MODE	HW	ISR	PX	AEXP	AX/A2	V-DEL	P-DEL	VGUESS	VLIMIT	TGUESS
-0.	1.000	-0.	1.0	25.00	331.9	1000.00	4000.0000	-0.	-0.	100.000	-0.	-0.	4500.0

H	R	ALPHA	HW	T	P	RHO	V	RNEW	ROLD	HVEL	HEQUIL
0	0	0.29	28.85	2.500E 03	9.878E-01	0.	1.2280E 05	0.	3.39E 03	-2.2867E 01	-3.5949E 01
1	0	0.28	28.01	2.700E 03	9.878E-01	0.	1.2280E 05	0.	3.39E 03	-2.2867E 01	-1.4528E 01
2	0	0.28	28.38	2.622E 03	9.878E-01	0.	1.2280E 05	0.	3.39E 03	-2.2867E 01	-2.3594E 01
3	0	0.28	28.35	2.628E 03	9.878E-01	0.	1.2280E 05	0.	3.39E 03	-2.2867E 01	-2.2903E 01
4	0	0.28	28.35	2.629E 03	9.878E-01	0.	1.2280E 05	0.	3.39E 03	-2.2867E 01	-2.2864E 01

SOLUTION OBTAINED

	PRESSURE	TEMPERATURE	ENTHALPY	VELOCITY	DENSITY	AREA	MACH. NO.	ENTROPY
STA. 2	2.0907E 03	4.7316E 03	-4.1155E 02	4.0289E 03	8.1007E-03	2.2469E 03	1.2505E 00	2.4360E-01
EXHAUST	7.3624E 02	4.3020E 03	-7.3868E 02	5.7256E 03	3.1997E-03	3.9974E 03	1.8821E 00	2.4360E-01

STATION #2			EXHAUST		
NET THRUST	IS AUG.	AUG. FACTOR	NET THRUST	IS AUG.	AUG. FACTOR
1.020E 07	3.606E 02	1.087E 00	1.121E 07	3.962E 02	1.194E 00

```
LOX-RP1
AIR AUGMENTED ROCKET
O/F = 2.30

BINARY  0    1-25-61     JANAF MASTER
COMPOSITION
FUEL                50.000000000
C                    2.175000012
H                    4.052999973
O                    4.355999947
OXIDIZER            25.000000000
N                    1.579999998
O                    0.419999994
BINDER1             25.000000000
H                    2.000000000
LAST                -0.
ESTIMATES
CHAMBER             -0.
ALPHA                0.286999993
H           1        0.019999996
C           1        0.000000007
O           1        0.013999999
N           1        0.000019997
H2          2        0.500000000
H2O         2        0.299999997
OH          2        0.299999997
O2          2        0.099999994
CO          2        0.359999999
CO2         2        0.719999999
N2          2        1.359999999
NO          2        0.009999998
LAST                -0.
EXECUTE
```

CASE TITLE- CASE 7 (SAME AS CASE 6 --ADD FUEL TO SECONDARY STREAM)

STARTING CONDITIONS

	P	T	H	A	V	F	GAMMA	M
PROPELLANT	1.8994E 03		-1.5120E-01	3.7035E 02	9.7341E 03	2.8253E 04	1.2500E 00	
STAG. AIR	2.3500E 03	6.2790E 02	1.2800E-02					
STREAM	2.0907E 03	6.0727E 02		1.4000E 03	4.9785E 02	4.5000E 04		4.1215E-01
INFINITY	6.2970E 02	4.1180E 02		9.7155E 02	1.6145E 03			1.6200E 00
STREAM FUEL			-1.0000E 00			4.5000E 03		

ABLE	BAKER	Y	MODE	HW	ISH	PX	AEXP	AX/A2	V-DEL	P-DEL	VGUESS	VLIMIT	TGUESS
-0.	1.000	-0.	1.0	25.00	331.9	1000.00	4000.0000	-0.	-0.	100.000	-0.	-0.	4500.0

H	R	ALPHA	HW	T	P	RHO	V	RNEW	ROLD	HVEL	HEQUIL
0	0	0.06	7.60	2.500E 03	9.878E-01	1.298E-04	1.1569E 05	0.	3.39E 03	-3.0139E 01	1.7831E 02
1	0	0.06	7.65	2.300E 03	9.878E-01	1.298E-04	1.1569E 05	0.	3.39E 03	-3.0139E 01	1.3856E 02
2	0	0.06	7.68	1.451E 03	9.878E-01	1.298E-04	1.1569E 05	0.	3.39E 03	-3.0139E 01	1.8510E 01
3	0	0.06	7.69	1.107E 03	9.878E-01	1.298E-04	1.1569E 05	0.	3.39E 03	-3.0139E 01	-2.4602E 01
4	0	0.06	7.71	1.063E 03	9.878E-01	1.298E-04	1.1569E 05	0.	3.39E 03	-3.0139E 01	-3.0685E 01
5	0	0.06	7.70	1.067E 03	9.878E-01	1.298E-04	1.1569E 05	0.	3.39E 03	-3.0139E 01	-3.0103E 01
6	0	0.06	7.70	1.067E 03	9.878E-01	1.298E-04	1.1569E 05	0.	3.39E 03	-3.0139E 01	-3.0142E 01

SOLUTION OBTAINED

	PRESSURE	TEMPERATURE	ENTHALPY	VELOCITY	DENSITY	AREA	MACH. NO.	ENTROPY
STA. 2	2.0907E 03	1.9203E 03	-5.4255E 02	3.7958E 03	5.4249E-03	3.7801E 03	9.6412E-01	7.1084E-01
EXHAUST	1.2425E 03	1.7335E 03	-8.3285E 02	5.3944E 03	3.6023E-03	4.0002E 03	1.4483E 00	7.1084E-01

STATION #2			EXHAUST		
NET THRUST	IS AUG.	AUG. FACTOR	NET THRUST	IS AUG.	AUG. FACTOR
1.244E 07	3.794E 02	1.143E 00	1.323E 07	4.036E 02	1.216E 00

4.0 OPERATING INFORMATION

4.1 Program and Data Set-Up

4.1.1 Program

The production program comprises 7 binary decks.

Name	Sequence Number
Main Program	1961N001 - 1961N165
CERPP4	1961N201 - 1961N218
EMESS ($M_S \leq 1.0$), or	1961N301 - 1961N311
($M_S > 1.0$)	1961N401 - 1961N411
Dummy Routines	1961N501 - 1961N559
(21 unused routines from the original AS 1317 program)	
INEST	1961N601 - 1961N615
CHARET	1961N701 - 1961N704
Equilibrium Package	1961P001 - 1961P474

4.1.2 Data

The data are in the form of punched cards as described in section 3.1. Any number of cases may be stacked for sequential execution.

4.2 Machine Set-Up and Run Information

4.2.1 End of Run

The end of a run is indicated by absence of additional input data cards.

4.2.2 Error Comments

a. INPUT ERROR IN PS, AS, FS OR MS

Indicates improper definition of augmenting stream (see section 3.1.4)

b. VELOCITY CORRECTED TO _____, T = _____

Indicates that the initial value of VGESS (see section 3.1.3) could not be corrected sufficiently in 30 attempts to bring the temperature within the required limits.

c. CERPP-4 DID NOT CONVERGE T = _____ P = _____

Indicates that no equilibrium solution could be obtained in the chemical portion of the program.

4.2.2 Error Comments (Continued)

d. CONVERGENCE FAILURE RIOLD = _____ RINEW = _____

Indicates that the proper temperature could not be computed in the interior iteration loop. Check the value of MW. (See section 3.1.6)

e. H FAILED TO CONVERGE HVEL = _____ HEQUIL = _____ P = _____ T = _____

Indicates convergence failure in the outside iteration loop. (See page 12)

f. AREA NOT MATCHED IN 50 TRYS

Indicates failure in the isentropic expansion between station 2 and station X. Check the input value P_e. (See section 3.1.7)

g. NEWTON-RAPHSON METHOD FAILS . . .

COULD NOT FIND INITIAS SUMF . . .

FORCEI REDUCED SUM TO _____ PCT . . .

These comments indicate difficulty within CERPP4; however, a good solution was eventually obtained unless error comment "e" above follows.

4.2.3 Run Time

The estimated run time is 1.0 minute per case plus 1.0 minute each time card set one is read.

4.2.4 Printout

The estimated number of lines output per case is 80 when a solution is specified (AMODE ≠ 0) and 200 when a profile is specified (AMODE = 0). (See section 3.1.3)

4.2.5 Tape Usage

Tape A2 (logical 5) is the input tape; tape A3 (logical 6) is the output tape.

A save tape containing thermo-chemical data for each species must be mounted on tape C5 (logical 15). These data are available on reel A-325 which is a copy of Boeing Master Tape A-797.

5.0 PROGRAMMING INFORMATION

5.1 Flow Diagrams

The following macroscopic flow diagrams are contained in this document:

Name	Figure Number	Page
Main Logic	2	43
Initialization	3	44
Subroutine EQUIL	4	45
Exit expansion	5	46
Subroutine CERPP4	6	47

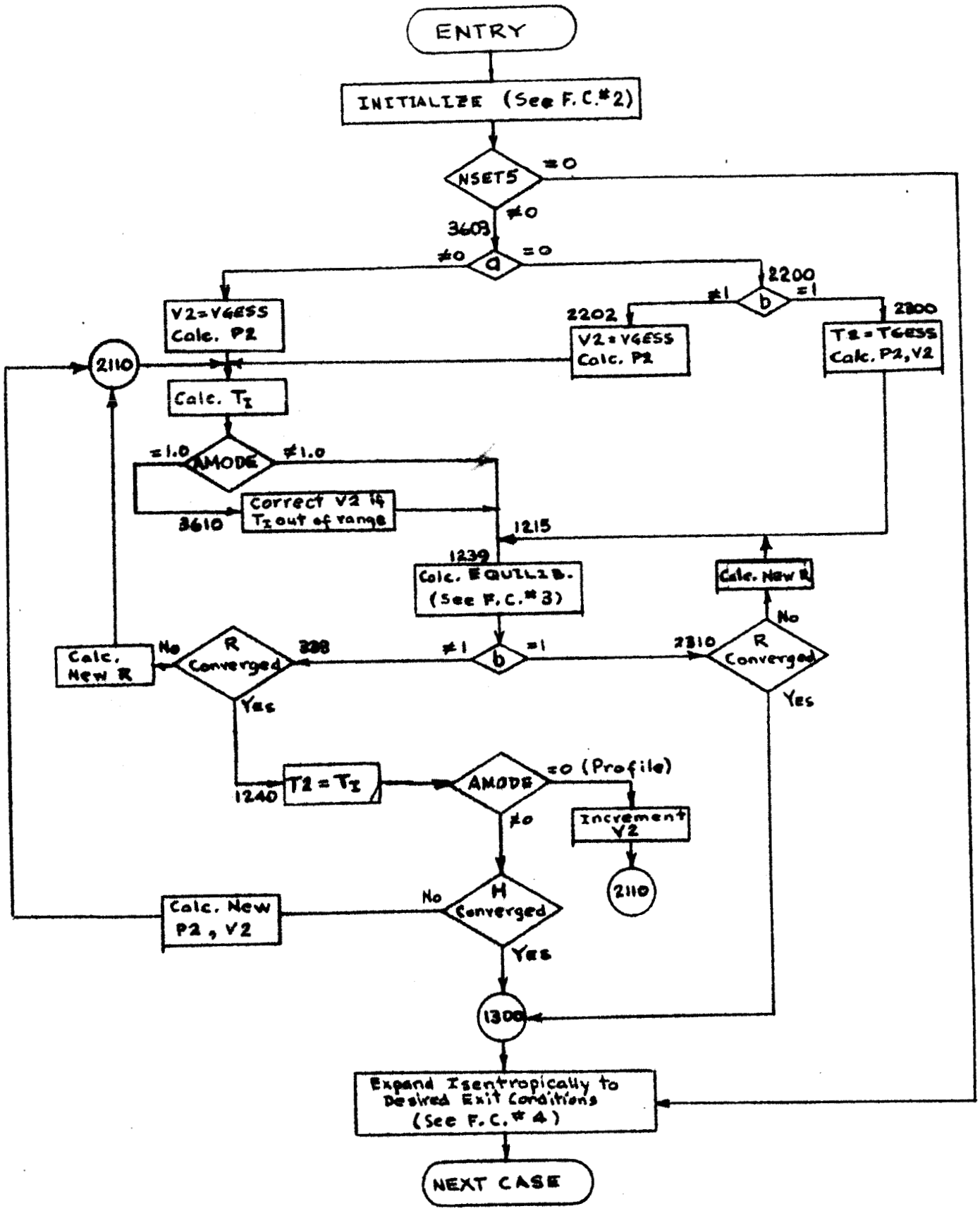

CALC			REVISED	DATE	FIGURE NO. 2	
CHECK					FLOW CHART #1 MAIN LOGIC	AS1961
APR						
APR					BOEING AIRPLANE COMPANY	PAGE 43

U3 4038 8000 (WAS BAC 1017 R5)

2-7000

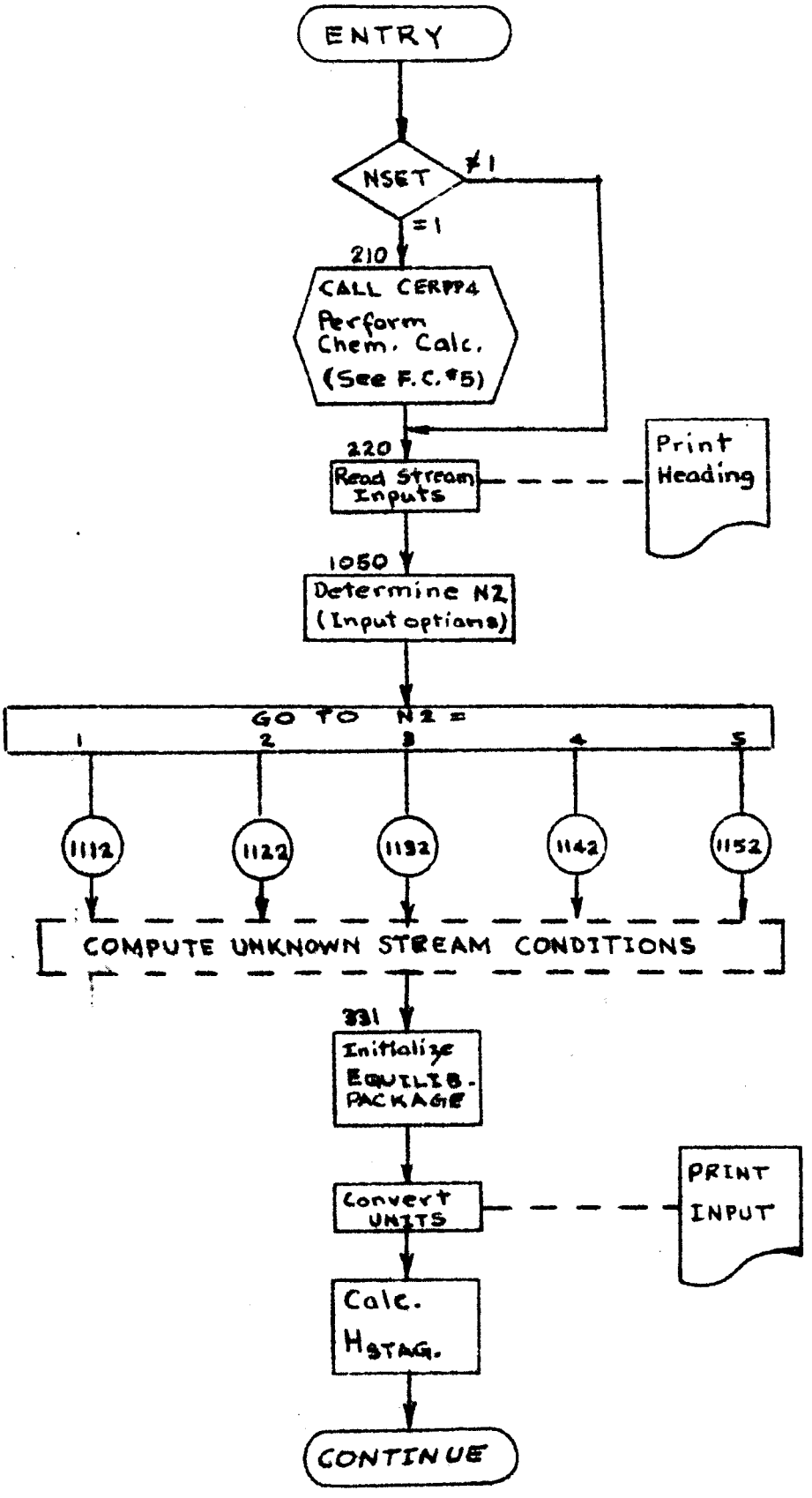

CALC			REVISED	DATE	FIGURE NO. 3 FLOW CHART #2 INITIALIZATION	
CHECK						AS 1961
APR						
APR					BOEING AIRPLANE COMPANY	PAGE

U3 4038 8000 (WAS BAC 1017 R5) 2-7000

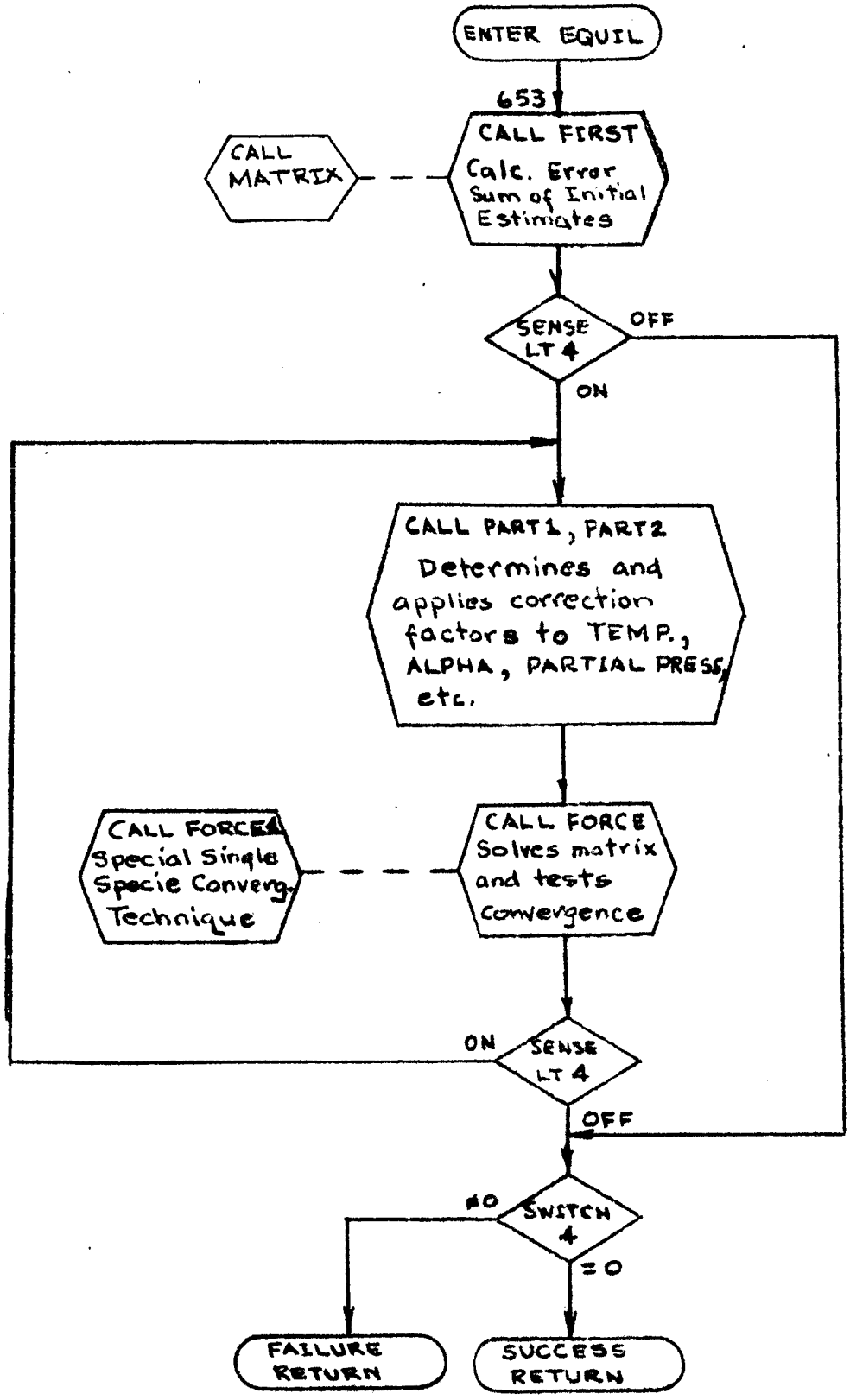

CALC			REVISED	DATE	FIGURE NO. 4 FLOW CHART #3 SUBROUTINE EQUIL BOEING AIRPLANE COMPANY	AS 1961
CHECK						
APR						
APR						PAGE

U3 4038 8000 (WAS BAC 1017 R5) 2-7000

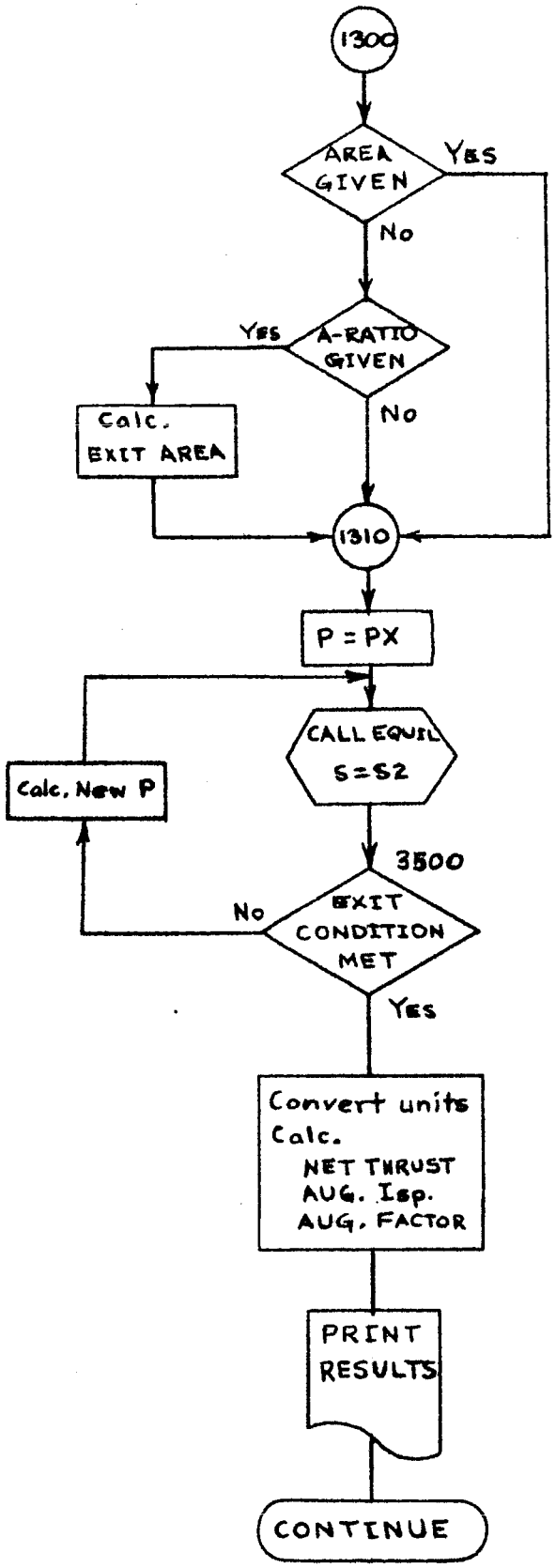

CALC			REVISED	DATE	FIGURE NO. 5 FLOW CHART #4 EXIT EXPANSION BOEING AIRPLANE COMPANY	
CHECK						AS1961
APR						
APR						PAGE 46

U3 4038 8000 (WAS BAC 1017 B5) 2-7000

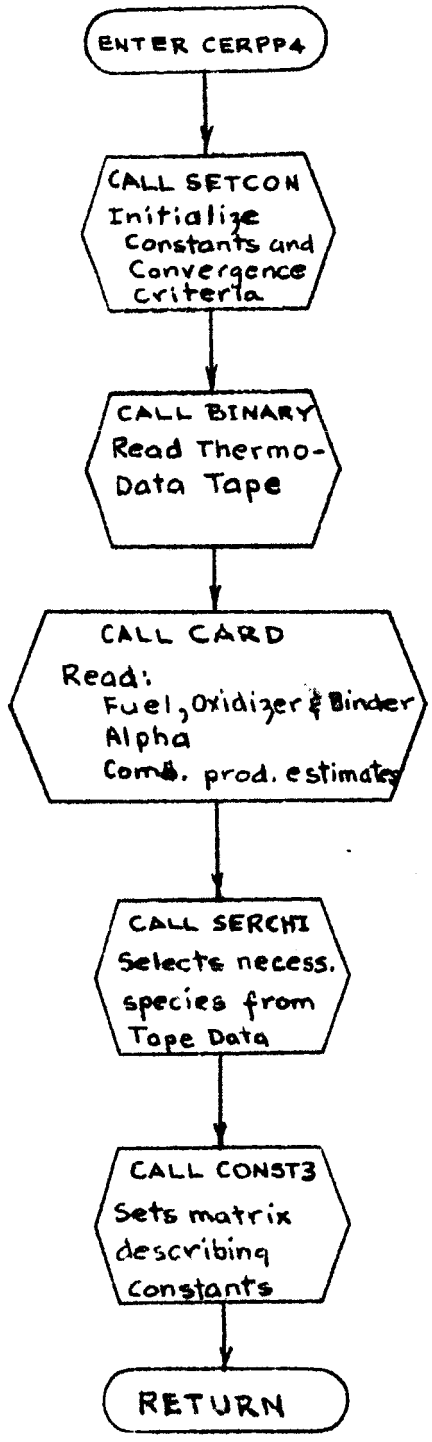

CALC			REVISED	DATE	FIGURE NO. 6 FLOW CHART #5 SUBROUTINE CERPP4 BOEING AIRPLANE COMPANY	AS 1961 PAGE 47
CHECK						
APR						
APR						

U3 4038 8000 (WAS BAC 1017 R5)

2-7000

5.2 Segmentation

5.2.1 Main Program

The main program reads the input, calculates the secondary stream properties, iterates to calculate properties after mixing the primary and secondary streams, iterates (whenever necessary) to calculate exit properties and prints the output.

5.2.2 Subprograms

a. CERPP4

This subroutine reads card set No. 1, reads the thermo-chemical data tape and performs the basic chemical calculations necessary for initialization.

b. EMESS

This subroutine solves equation (9b) by iteration if the secondary stream is defined in terms of area and mass flow rate.

c. CHARET

This subroutine is required since the subroutines in the EQUIL section often take the log of zero which, under the FORMON 1 3/4 monitor system, would otherwise cause an error exit. The CHARET permits the program to execute exactly as it did under the FORMON 1 monitor.

d. INEST

This subroutine reads in estimates of the specie products of combustion.

e. DUMMY ROUTINES

These 21 subroutines are part of the original program from which the present equilibrium package was taken. These routines are not needed and should never be called. It would require extensive logic revision in about 30 subroutines to remove their call statements; therefore dummy routines have been substituted.

f. AS-1317 Routines

These 57 subroutines are used in their original form.

5.2.3 FAP Routines

The following subroutines are written in FAP machine language:

FORM	SETSWT
LXCHAR	TRBINX
NESET	

5.3 Storage Requirements

The core map on page 27 gives the size and load location of each routine.

5.4 Deck Identification

The sequence numbers of the source and binary decks of the main program and each subroutine are contained in Appendix A.

5.5 Program Listings

Program listings for all routines written expressly for this project are contained in Appendix B. The remaining subroutines are unchanged from the CERP-IV program (AS-1317).

6.0 APPENDICES

Appendix A Deck Identification

Appendix B Program Listings

Appendix C Input Data Forms

APPENDIX A

Deck Identification

Name	Symbolic	Binary
Main	1961A001-1961A768	1961N001-1961N165
CERPP4	1961B001-1961B185	1961N201-1961N218
EMESS LØ	1961B201-1961B233	1961N301-1961N311
EMESS HI	1961B301-1961B333	1961N401-1961N411
DUMMY ROUTINES	1961B501-1961B690	1961N501-1961N559
(08) MAINCH	501-510	
(09) MAINEQ	511-520	
(28) GAMMA	521-530	
(35) DESIGN	531-540	
(38) NOZZLE	541-550	
(39) CSTAR	551-560	
(40) MAINFR	561-570	
(41) ZENTRØ	671-580	
(46) TRMATX	581-586	
(47) TRPRSX	587-592	
(49) TRVARX	593-598	
(51) TRLOGX	599-604	
(52) TRINPX	605-610	
(59) SHAPE	611-620	
(59B) JCHECK	621-630	
(73) SHIFCP	631-640	
(88) EXTRA1	641-650	
(89) EXTRA2	651-660	
(95) SUMARY	661-670	
(96) AREA	671-680	
(97) SPEED	681-690	
INEST -65	1961C001-1961C140	1961N601-1961N615
CHARET	1961C200-1961C237	1961N701-1961N704
Unchanged AS 1317 Subroutines		1961P001-1961P474
SETCON -02	1317A248-A361	
CARD -03	A362-A407	
CONST3 -04	A408-A475	
CALC -07	A582-A680	

U3 4288 2000 REV. 3/64

Name		Symbolic	Binary
EQUIL	-10	1317A982-B095	
LIQSOL	-11	B096-B208	
DATAC	-12	B209-B257	
DATAH	-13	B258-B307	
DATAS	-14	B308-B356	
DATAQV	-15	B357-B412	
DATADF	-16	B413-B524	
ENTHA	-17	B525-B574	
ENTRO	-18	B575-B633	
TEST	-19	B634-B741	
INITIA	-20	B742-B810	
PART1	-21	B811-B901	
PART2	-22	B902-B994	
SYMTRY	-23	B995-C066	
SUMANP	-24	C067-C130	
QCOL	-25	C131-C196	
DCOL	-26	C197-C267	
ROW2	-27	C268-C305	
HS2	-29	C500-C581	
MATRIX	-30	C582-C685	
MAT1	-32	C686-C719	
DELTA	-33	C720-C765	
DELTA1	-34	C766-C785	
FORCE	-36	D078-D197	
FORCE1	-37	D198-D328	
DPALL	-43	D756-D791	
TRMAT	-44	Not Available	
TRALLX	-45	D792-D805	
TRSINX	-48	D929-E019	
TRBINX	-50	E098-E152	
WRLØC	-53	E276-E288	
FIRST	-55	E289-E364	
BØTHLS	-56	E365-E499	
ESTEEM	-57	E505-E576	
NSERCH	-58	E577-E643	

Name		Symbolic	Binary
BINARY	-60	1317H886-H985	
SEARCI	-61	E805-E969	
FILLIN	-62	E976-F065	
NAMEX	-63	F066-F130	
LXCHAR	-66	F268-F299	
READIN	-67	F300-F403	
NESET	-68	F404-F655	
SETØPT	-69	F656-F749	
FØRM	-71	F750-F773	
FØRM1	-72	F774-F877	
DENSTY	-74	G047-G098	
VAPØR	-75	G099-G158	
SETSWT	-80	G159-G207	
EØFPRT	-81	G208-G569	
SETSWS	-85	G570-G675	
LISTSP	-87	G729-G911	
SAVES	-90	H348-H452	
RESET	-92	H528-H629	

A P P E N D I X B

Program Listings

TABLE OF CONTENTS

Name	Page
MAIN PROGRAM	57
CERPP4	76
EMESS (Subsonic)	82
EMESS (Supersonic)	84
INEST	86
CHARET	91
DUMMY ROUTINES	93

```
C     GENERAL DIMENSION STATEMENT          ||||||||||||||||||||||||||||||1961A004
C     TEMPORARY WORKING STORAGE          (430)                            1961A005
      DIMENSION COMMON(130),JOMMON(130),TEMP1(100),TEMP2(100),TEMP3(100)1961A006
      COMMON COMMON    ,TEMP1,TEMP2,TEMP3                                 1961A007
      EQUIVALENCE (COMMON,JOMMON)                                         1961A008
C     VARIABLES SPECIFYING SIZE OF PROBLEM        (31)                   1961A009
      DIMENSION LCOUNT(3)                                                 1961A010
      COMMON N,NA,NM,NN,NAM,NMN,NAN,NAMN,NA1,NM1,NN1,NAM1,NMN1,NAN1,      1961A011
     X NAN2,NAN3,NAMN1,NAMN2,NAMN3,NAMN4, NPROB,NITER,NITERA,NITER1       1961A012
     X ,NEST,NAMNES,NCODE,NLISP, LCOUNT                                   1961A013
C     CONSTANTS,NUMERIC,RCD AND CONVERGENCE CRITERIA      (41)            1961A014
      DIMENSION LABEL(20),CN(12)                                          1961A015
      COMMON R,CP,CRTS,CRTH,CRTHS,CRTA,CRTM,CRTN,CRTP,CPROZE,LABEL        1961A016
C     RCD LABELS OF CURRENT SYSTEM            (336)                       1961A017
      DIMENSION NOMEN(100,2),NAME(2),NOMENS(15,2),NOMENL(15,2),IDEN(12),1961A018
     XID(5,12)                                                            1961A019
      COMMON NOMEN,NAME ,WSYS1,WSYS2,NOMENS,NOMENL,IDEN,ID                1961A020
C     INPUT DATA FOR A SYSTEM        (4620)                               1961A021
       DIMENSION COMP(50,15),COMPC(50),NCOMP(50),WEL(15),RATIOS(15)       1961A022
     X,COMPM(50),COMPH(50),A0(15),V0(15),HCORR(15)                        1961A023
      COMMON COMP,COMPC,NCOMP,WEL,RATIOS,NREACT,COMPM,COMPH,A0,V0         1961A024
      DIMENSION AZERO(15),A(100,15),F(100,12),DENS(15),TRANT(15),STORE(   1961A025
     X435),LIQSL(15)       ,ECONDS(15,12),ECONDL(15,12),DENSL(15,2)       1961A026
      COMMON AZERO,A,STORE,LIQSL , F,ECONDS,ECONDL,DENS,TRANT,HCORR,      1961A027
     X HZERO,SZERO,FORMWT,DENSL,PI,GPI,PEXIT,GPEXIT,ESZERO,EHZERO         1961A028
C     ESTIMATES FOR A SYSTEM      AND     ESTIMATING SAVE STORE    (610) 1961A029
      DIMENSION CMP(100),GCMP(100),EQP(100),GEQP(100),SAVE(200)           1961A030
      COMMON CMP,GCMP,CMT,GCMT,CMAL,GCMAL,EQP,GEQP,EQT,GEQT,EQAL,GEQAL    1961A031
     X ,SAVE,PERC,PD                                                      1961A032
C     CALCULATED THERMODYNAMIC DATA        (1712)                         1961A033
      DIMENSION                                                           1961A034
     XP(100),GP(100),P1(100),GP1(100),F(100),C(100),H(100),S(100),Q(100)1961A035
     X , W(100),V(100),D(100),S1(100),FRAC(100),CMLP(15),CMSP(15),        1961A036
     XEQLP(15),EQSP(15),C1(100),D1(100)                                   1961A037
      COMMON P,GP,P1,GP1,F,C,H,S,Q,W,V,D,S1,FRAC,CMLP,CMSP,EQLP,EQSP,     1961A038
     X Q1,P1              ,  CMMOLS,EQMOLS,FRT,GFRT,FHZERO,FSZERO,HZERO1, 1961A039
     X T,GT,T1,GT1,TT,TRTEMP,ALPHA,GALPHA,AL1,GAL1,RATIO,GRATIO,          1961A040
     X SUMF1,SUMF2,SUMH,SUMS1,SUMS2,SUMS,FMS,FP,DM,DP,DS,                 1961A041
     X SPIMP,FWIMP,FRIMP1,EQIMP,EQIMP1,         PP,GPP,PPI,GPPI,          1961A042
     X AVM,AVC,GAM,SAF,CHSPHT,CHGAM,EQSPHT,EQGAM                          1961A043
     X ,FRSPHT,PERCZE,CGAMMA,EGAMMA,FGAMMA                                1961A044
C     MATRIX STORAGE                    (1193)                            1961A045
      DIMENSION H(32,33),Y(32) ,ETA(102)                                  1961A046
      COMMON  H,Y,ETA,HETA,OMEGA,HETA1                                    1961A047
C     STORAGE FOR  U* CALCULATIONS              (6)                       1961A048
       COMMON UMAX,UMAX,CST,DUMAX1,DUMAX2 ,DUMAX                          1961A049
C     SWITCHES                (101)                                       1961A050
      DIMENSION SWITCH (100)                                              1961A051
C     INPUT DATA STORAGE FROM BINARY TAPE                    (9102)       1961A052
      COMMON SWITCH,EHS                                                   1961A053
      DIMENSION INAME(200,2),NOTWT(100,2),WCON(100,2),WBLOK(200,12),      1961A054
     X VECTOR(200,15)                                                     1961A055
C     MORE STORAGE FOR USTAR                                              1961A056
```

```
      COMMON LNAME,NOTWT,WCON,WBLOK,VECTOR,LBLO,LCON                    1961A057
      DIMENSION THCP(32), THP(100)                                      1961A058
      COMMON THCP, THP, THT, THAL, THZERO, TGAMMA,                      1961A059
     XTHSPHT, TSZERO, THMOLS, THPI                                      1961A060
C     BOEING COMMON STORAGE                                             1961A061
      COMMON IML, I, ICASE, IFILE, KD, KO, LETTER, NB                   1961A062
      COMMON IRENE                                                      1961A063
      DIMENSION IRENE(231)                                              1961A064
      COMMON FREXIT, KGAMCP                                             1961A065
      COMMON EQAREA                                                     1961A066
      COMMON KVAPOR                                                     1961A067
      COMMON NOCP                                                       1961A068
     1,KMAXCP                                                           1961A069
     1, KERINT, ABSAVE                                                  1961A070
     1,NAN2IL,NAN4IL,NAMNIL                                             1961A071
     1,NAMN2I, NNIL, NANIL                                              1961A072
      COMMON DCP                                                        1961A073
      DIMENSION DCP(15)                                                 1961A074
      COMMON TEQIMP, TEQIM1, TSPIMP, NOEXM                              1961A075
      COMMON SAVEPX, SAVENX, NX                                         1961A076
      DIMENSION SAVEPX(16), SAVENX(16)                                  1961A077
C     END OF COMMON STORAGE      QQQQQQQQQQQQQQQQQQQQQQQQQQQQQQQQQQQQQQ1961A078
      DIMENSION CASE (10)                                               1961A079
C                                                                       1961A080
 1001 FORMAT(8F10.0)                                                    1961A081
      NPHEAD = 0                                                        1961A082
 1000 CONTINUE                                                          1961A083
C                                                                       1961A084
C                 RELOAD VALUES STORED IN SAVE CELLS                    1961A085
C                                                                       1961A086
      TGESS = SVTG                                                      1961A087
      VGESS = SVVG                                                      1961A088
      VLIMIT = SVVL                                                     1961A089
      GAMA = SVGAM                                                      1961A090
      AMODE = SVMOD                                                     1961A091
      PZ = SVPZ                                                         1961A092
      HPR = SVHP                                                        1961A093
      AP = SVAP                                                         1961A094
      FZ = SVFZ                                                         1961A095
      VP = SVVP                                                         1961A096
      EMP = SVMP                                                        1961A097
      PS = SVPS                                                         1961A098
      AS = SVAS                                                         1961A099
      FS = SVFS                                                         1961A100
      FSH = SVFSH                                                       1961A101
      EMS = SVMS                                                        1961A102
      ARTE = SVAR                                                       1961A103
      EARER = SVBK                                                      1961A104
      AMR = SVMR                                                        1961A105
      YAR = SVYAR                                                       1961A106
      PSB = SVPSB                                                       1961A107
      TSB = SVTSB                                                       1961A108
      RSB = SVRSB                                                       1961A109
      RSBB = SVRSBB                                                     1961A110
```

```
      P8 = SVPR                                                         1961A111
      T8 = SVTR                                                         1961A112
      A8 = SVAR                                                         1961A113
      EM8 = SVM8                                                        1961A114
      VDELTA = SVVD                                                     1961A115
      NSET5 = 0                                                         1961A116
      NPOS = 0                                                          1961A117
      READ INPUT TAPE 5, 200, NSET                                      1961A118
  200 FORMAT(I2)                                                        1961A119
      GO TO (210,220,230,240,250,260), NSET                             1961A120
C                                                                       1961A121
C               READ DATA TAPE AND INITIALIZE THE CHEMISTRY             1961A122
  210 CALL CERPP4                                                       1961A123
      NHSAVE = 0                                                        1961A124
C                                                                       1961A125
  220 AMODE = 0                                                         1961A126
      YAR = 0                                                           1961A127
      READ INPUT TAPE 5,1001,TGESS,VGESS,VLIMIT,     GAMA,AMODE,YAR     1961A128
      SVTG = TGESS                                                      1961A129
      SVVG = VGESS                                                      1961A130
      SVVL = VLIMIT                                                     1961A131
      SVGAM = GAMA                                                      1961A132
      SVMOD = AMODE                                                     1961A133
      SVYAR = YAR                                                       1961A134
  230 READ INPUT TAPE 5,1001, PZ, HPO, AP, FZ, VP,HSBO,FSB              1961A135
      SVPZ = PZ                                                         1961A136
      SVHP = HPO                                                        1961A137
      SVAP = AP                                                         1961A138
      SVFZ = FZ                                                         1961A139
      SVVP = VP                                                         1961A140
      SVHSBO = HSBO                                                     1961A141
      SVFSB = FSB                                                       1961A142
  240 V8 = 0                                                            1961A143
      AR = 0                                                            1961A144
      READ INPUT TAPE 5, 1001, P8, T8, A8, V8, EM8,PS0,TS0,HS0,         1961A145
      SVP8 = P8                                                         1961A146
      SVT8 = T8                                                         1961A147
      SVA8 = A8                                                         1961A148
      SVM8 = EM8                                                        1961A149
      SVPS0 = PS0                                                       1961A150
      SVTS0 = TS0                                                       1961A151
      SVHS0 = HS0                                                       1961A152
  250 PS = 0                                                            1961A153
      FS = 0                                                            1961A154
      AS = 0                                                            1961A155
      EMS = 0                                                           1961A156
      ABLE = 0                                                          1961A157
      BAKER = 0                                                         1961A158
      READ INPUT TAPE 5, 1001, PS, AS, FS, EMS,ABLE,BAKER,AMW,VDELTA    1961A159
      NSET5 = 1                                                         1961A160
  260 AEXP = 0                                                          1961A161
      ARATIO = 0                                                        1961A162
      READ INPUT TAPE 5, 1001, PX, AEXP, ARATIO, PDELTA, SIR            1961A163
      READ INPUT TAPE 5, 201, CASE                                      1961A164
```

```
  201 FORMAT(10A6)
C
      JAX = 1
      ITEMA = 1
C
C                IF SET SIX ONLY IS READ GO DIRECTLY TO 5000
      IF (NSET5) 265, 5000, 265
  265 CONTINUE
      JPASS = 0
      NPASS = 0
      MPASS = 0
      NOW = 0
      ITERR = 0
      ITERRR = 0
      NSTART = 0
      START = 0
      DENOM = 1.0
      G = 32.2
      AJ= 778.0
      RDELTA=10.
      HDELTA = .01
      TDELTA = 200.
      JR = 0
      GAMMA=1.4
      Z13 = 1.02369/E06
C
      ABLE8 = 49.11*SQRTF(T8)
      IF (V8) 501, 500, 501
  500 V8 = ABLE8*EM8
  501 RHO8 = P8/(53.3*T8)
      EM8 = V8/ABLE8
      IF (A8) 502, 503, 502
  502 FS = RHO8*A8*V8
      GO TO 505
  503 A8 = FS/(RHO8*V8)
  505 CONTINUE
      IF(NPHEAD) 530,520,530
  520 CONTINUE
C
      WRITE OUTPUT TAPE 6, 1003
 1003 FORMAT(1H1,47X,28HAIR AUGMENTED ROCKET PROGRAM//2X,45HTHE FOLLOWIN
     1G PROGRAM LABELS AND UNITS APPLY.)
      WRITE OUTPUT TAPE 6, 1004
 1004 FORMAT(1H0,6X,8HPRESSURE,11X,1HP,9X,9HLBF/SQ-FT/6X,11HTEMPERATURE,
     18X,1HT,9X,5HDEG R/6X,8HENTHALPY,11X,1HH,9X,7HBTU/LBM/6X,7HENTROPY,
     212X,1HS,9X,8HKCAL/DEG)
      WRITE OUTPUT TAPE 6, 1005
 1005 FORMAT(1H0,6X,4HAREA,13X,1HA,9X,5HSQ-FT/6X,7HDENSITY,12X,3HRHO7X,9
     1HLBM/CU-FT/6X,8HVELOCITY,11X,1HV,9X,6HFT/SEC)
      WRITE OUTPUT TAPE 6, 1006
 1006 FORMAT(1H0,6X,14HMASS FLOW RATE,5X,1HF,9X,7HLBM/SEC/6X,12HGAS CONS
     1TANT,7X,1HR,9X,15HFT-LB/LB-MOLE-DEG/6X,15HMECH EQUIV OF T4X,1HJ9X,10
     2HFT-LBS/BTU)
      WRITE OUTPUT TAPE 6, 1007
```

```
 1007 FORMAT(1H0,5X,24HSPECIFIC T RATIO   GAMMA/6X,11HMACH NUMBER8X,1HM)1961A219
      WRITE OUTPUT TAPE 6, 1008                                         1961A220
 1008 FORMAT(1H0,21X,11HSUBSCRIPTS-//14X,14H0 - STAGNATION/14X,14HP - PR1961A221
     1OPELLANT/14X,10HS - STREAM/14X,24H2 - STATION 2 (SOLUTION)/14X,11H1961A222
     2X - EXHAUST/14X,12H8 - INFINITY/14X,16HSH - STREAM FUEL////)      1961A223
      WRITE OUTPUT TAPE 6,1011,ID                                       1961A224
 1011 FORMAT(1H0,24X,11HCURRENT RUN //,5(40X,12A6,/))                   1961A225
      NPREAD = 1                                                        1961A226
  530 CONTINUE                                                          1961A227
C                                                                       1961A228
C                 DETERMINE N2(INPUT OPTION INDEX)                      1961A229
C                                                                       1961A230
 1050 IF (PS) 1052, 1060, 1052                                          1961A231
 1052 IF(EMS) 1054, 1056, 1054                                          1961A232
 1054 N2= 1                                                             1961A233
      GO TO 1100                                                        1961A234
 1056 IF (AS) 1058, 1060, 1058                                          1961A235
 1058 N2= 2                                                             1961A236
      GO TO 1100                                                        1961A237
 1060 IF (PS) 1062, 1064, 1062                                          1961A238
 1062 N2= 3                                                             1961A239
      GO TO 1100                                                        1961A240
 1064 WRITE OUTPUT TAPE 6, 1065                                         1961A241
 1065 FORMAT(1H0,30HINPUT ERROR IN PS,AS,PS, OR MS)                     1961A242
      GO TO 1000                                                        1961A243
 1066 IF (AS) 1068, 1064, 1068                                          1961A244
 1068 IF(EMS) 1070, 1072, 1070                                          1961A245
 1070 N2= 4                                                             1961A246
      GO TO 1100                                                        1961A247
 1072 IF (PS) 1074, 1064, 1074                                          1961A248
 1074 N2= 5                                                             1961A249
C                                                                       1961A250
 1100 GAM1 = GAMMA/(1.0-GAMMA)                                          1961A251
      GAM2 = 1.0/GAM1                                                   1961A252
      GAM3 = (GAMMA-1.0)/2.                                             1961A253
      GAM5RT = SQRT(GAMMA/(G*53.3*TS0))                                 1961A254
      GAM6G = (GAMMA + 1.0)/(2.0*(GAMMA - 1.0))                         1961A255
C                                                                       1961A256
C                 CALCULATE MISSING STREAM PROPERTIES                   1961A257
C                                                                       1961A258
      GO TO (1112,1122,1132,1142,1152), N2                              1961A259
 1112 CONTINUE                                                          1961A260
      GAM4M = 1.0+GAM3*EMS*EMS                                          1961A261
      GAM77 = GAM4M**GAM6G                                              1961A262
      GAM88 = GAM4M**GAM1                                               1961A263
      PS = PS0*GAM88                                                    1961A264
      AS=PS/(G*PS0*GAM5RT*EMS/GAM77)                                    1961A265
      GO TO 1160                                                        1961A266
 1122 CONTINUE                                                          1961A267
      CALL EMESS(PS,AS,PS0,GAM5RT,GAMMA,EMS)                            1961A268
      GAM4M = 1.0+GAM3*EMS*EMS                                          1961A269
      GAM88 = GAM4M**GAM1                                               1961A270
      IF(EMS)1123,1243,1123                                             1961A271
 1123 PS=PS0*GAM88                                                      1961A272
```

```
      GO TO 1160                                                        1961A273
 1132 CONTINUE                                                          1961A274
      EMS=SQRTF((PS**GAM2-PS0**GAM2)/(GAM3*PS0**GAM2))                  1961A275
      GAM4M = 1.0+GAM3*EMS*EMS                                          1961A276
      GAM77 = GAM4M**GAM6G                                              1961A277
      GAM88 = GAM4M**GAM1                                               1961A278
      AS=FS/(G*PS0*GAM5RT*EMS/GAM77)                                    1961A279
      GO TO 1160                                                        1961A280
 1142 CONTINUE                                                          1961A281
      GAM4M = 1.0+GAM3*EMS*EMS                                          1961A282
      GAM77 = GAM4M**GAM6G                                              1961A283
      GAM88 = GAM4M**GAM1                                               1961A284
      FS = PS0*GAM88                                                    1961A285
      FS=AS*G*PS0*GAM5RT*EMS/GAM77                                      1961A286
      GO TO 1160                                                        1961A287
 1152 CONTINUE                                                          1961A288
      EMS=SQRTF((PS**GAM2-PS0**GAM2)/(GAM3*PS0**GAM2))                  1961A289
      GAM4M = 1.0+GAM3*EMS*EMS                                          1961A290
      GAM77 = GAM4M**GAM6G                                              1961A291
      FS=AS*G*PS0*GAM5RT*EMS/GAM77                                      1961A292
C                CALCULATE TS AND VS                                    1961A293
 1160 TS = TS0/(1.0+GAM3*EMS*EMS)                                       1961A294
      VS = SQRTF((GAMMA*G*53.3/GAM3)*(TS0-TS))                          1961A295
C                                                                       1961A296
      SVPS = PS                                                         1961A297
      SVAS = AS                                                         1961A298
      SVFS = FS                                                         1961A299
      SVMS = EMS                                                        1961A300
      SVAB = ABLF                                                       1961A301
      SVMA = BARFM                                                      1961A302
      SVMW = AMW                                                        1961A303
      SVDD = VDELTA                                                     1961A304
C                                                                       1961A305
C                SET EQUIL, PACKAGE LOGIC SWITCHES                      1961A306
C                                AND                                    1961A307
C                CORRECT CHEM. COMP. PER CURRENT MASS FLOW RATES        1961A308
C                                                                       1961A309
      DO 331 I=1,100                                                    1961A310
  331 CALL SETSWT(I)                                                    1961A311
      CALL SETSWP(4)                                                    1961A312
      CALL SETSWP (35)                                                  1961A313
      CALL SETSWP(81)                                                   1961A314
      CALL SETSWT(-82)                                                  1961A315
      COMPC(5) = 100.0*FS/(FZ+FS+FSH)                                   1961A316
      COMPC(4) = 100.0*FZ/(FZ+FS+FSB)                                   1961A317
      COMPC(A) = 100.0*FSB/(FZ+FS+FSH)                                  1961A318
      CALL CALC                                                         1961A319
      CALL SETSWP(-88)                                                  1961A320
      KMAXCP=1                                                          1961A321
 1010 CONTINUE                                                          1961A322
C                                                                       1961A323
      WRITE OUTPUT TAPE 6, 202, CASE                                    1961A324
  202 FORMAT(1H1,42HCASE TITLE- ,10A6,/50X,19HSTARTING CONDITIONS/)     1961A325
      WRITE OUTPUT TAPE 6, 1012                                         1961A326
```

```
 1012 FORMAT(1H0,16X,1HP,12X,1HT,12X,1HH,12X,1HA,12X,1HV,12X,1HF,10X,5HG1961A327
     1AMMA,10X,1HM/)                                                    1961A328
      WRITE OUTPUT TAPE 6, 1013, PZ, HPU, AP, VP, FZ, GAMA              1961A329
 1013 FORMAT(1H0,41HPROPELLANT 1PE11.4,15X,5E13.4)                      1961A330
      WRITE OUTPUT TAPE 6, 1014, PS0, TS0, HS0                          1961A331
 1014 FORMAT(1H 14HSTAG. AIR  1PE11.4,1E13.4,E15.4)                     1961A332
      WRITE OUTPUT TAPE 6, 1015, PS, TS, AS, VS, FS, EMS                1961A333
 1015 FORMAT(1H 14HSTREAM     1PE11.4,E13.4,15X,3E13.4,13X,E13.4)       1961A334
      WRITE OUTPUT TAPE 6, 1020, PB, TB, AB, VB, EMB                    1961A335
 1020 FORMAT(1H 14HINFINITY   1PE11.4,E13.4,15X,2E13.4,28X,E11.4)       1961A336
      WRITE OUTPUT TAPE 6, 1181, HSHB, FSB                              1961A337
 1181 FORMAT(1H 14HSTREAM FUEL,26X,1PE13.4,26X,E13.4)                   1961A338
      WRITE OUTPUT TAPE 6, 9009                                         1961A339
      WRITE OUTPUT TAPE 6, 9009                                         1961A340
      WRITE OUTPUT TAPE 6, 1021, ARLE, BAKER, YAR, AMODE, AMW, SIR, PX, 1961A341
     1AEXP, ARATIO, VDELTA, PDELTA, VGESS, VLIMIT, TGESS                1961A342
 1021 FORMAT(1X,116H ARLE    BAKER     Y    MODE    MW      ISR         PX     1961A343
     2  AEXP      AX/A2      VDEL    PDEL       VGUESS  VLIMIT  TGUESS  1961A344
     3//1X,F6.3,F8.3,F5.1,F6.1,F7.2,F7.1,F11.2,F10.4,F8.3,F11.1,F8.3,F121961A345
     4.0,F8.0,F8.1)                                                     1961A346
      WRITE OUTPUT TAPE 6, 9009                                         1961A347
      IF (NSETS) 5100, 5080, 5100                                       1961A348
 5100 CONTINUE                                                          1961A349
      WRITE OUTPUT TAPE 6, 9001                                         1961A350
 9001 FORMAT(1H0,46H H   R ALPHA    MW,12X,1HT,10X,1HP,9X,3HRHO,9X,1HV,12X1961A351
     1,4HRNEW,8X,4HROLD,9X,4HHVEL,7X,4HHFUEL)                           1961A352
C                                                                       1961A353
C                CHANGE UNITS TO CGS                                    1961A354
C                                                                       1961A355
      PS = .0004725*PS                                                  1961A356
      PZ = .0004725*PZ                                                  1961A357
      PX = .0004725*PX                                                  1961A358
      PDELTA = .0004725*PDELTA                                          1961A359
      AP = 929.36803*AP                                                 1961A360
      AS = 929.36803*AS                                                 1961A361
      AEXP = 929.36803*AEXP                                             1961A362
      TS = .55555*TS                                                    1961A363
      TS0 = .55555*TS0                                                  1961A364
      TGESS = .55555 * TGESS                                            1961A365
      FS = 453.6*FS                                                     1961A366
      FZ = 453.6*FZ                                                     1961A367
      FSH = 453.6*FSB                                                   1961A368
      VP = 30.48*VP                                                     1961A369
      VS = 30.48*VS                                                     1961A370
      VGESS = 30.48*VGESS                                               1961A371
      VLIMIT = 30.48 * VLIMIT                                           1961A372
      VDELTA = 30.48*VDELTA                                             1961A373
      RZERO = 8482.0                                                    1961A374
C                                                                       1961A375
C                CALCULATE STAGNATION ENTHALPY AT STATION 2             1961A376
C                                                                       1961A377
      GMSAIR = COMPC(5)                                                 1961A378
      GMSROC = COMPC(4)          +COMPC(7)+COMPC(8)+COMPC(9)+COMPC(10)  1961A379
     1+COMPC(11)+COMPC(12)+COMPC(13)+COMPC(14)+COMPC(15)                1961A380
```

```
      GMSSB = COMPC(6)                                                  1961A381
      HSSTAG = HS0*GMSAIR/100.0                                         1961A382
      HPSTAG = HP0*GMSROC/100.0                                         1961A383
      HSBSTG = HSB0*GMSSB/100.0                                         1961A384
      H2STAG = HSSTAG+HPSTAG+HSBSTG                                     1961A385
C                INITIALIZE FOR ITERATIONS                              1961A386
      POLD = 68.0                                                       1961A387
      RIOLD = RZERO/AMW                                                 1961A388
      V2 = VGESS                                                        1961A389
      ALPHA = CHAL                                                      1961A390
      GALPHA = LOGF(CHAL)                                               1961A391
      DO 1216 I=1, NCODE                                                1961A392
      P(I) = CHP(I)                                                     1961A393
      IF(P(I)) 4010,4011,4012                                           1961A394
 4011 GP(I) = 0.0                                                       1961A395
      GO TO 1216                                                        1961A396
 4010 P(I) = -P(I)                                                      1961A397
 4012 CONTINUE                                                          1961A398
      GP(I) = LOGF(P(I))                                                1961A399
 1216 CONTINUE                                                          1961A400
      DO 1217 I=1, LCOUNT                                               1961A401
      CHLP(I) = 0.0                                                     1961A402
 1217 CHSP(I) = 0.0                                                     1961A403
C                                                                       1961A404
C                (AAR 0404) TO (AAR 0533) ITERATES ON R TO DETERMINE T2 1961A405
C                                                                       1961A406
 3600 IF (30-NSTART) 3601, 3603, 3603                                   1961A407
 3601 WRITE OUTPUT TAPE 6, 3602, VGESS, TITER                           1961A408
 3602 FORMAT(1H0,40X,21HVELOCITY CORRECTED TO1PE12.4,4H  T=E12.4)       1961A409
      GO TO 1000                                                        1961A410
 3603 CONTINUE                                                          1961A411
      IF (ABLE) 2100, 2200, 2100                                        1961A412
 2100 A2 = AMLF*(AS+AP)                                                 1961A413
      V2 = VGESS                                                        1961A414
      V2PREV = V2                                                       1961A415
 2105 RHO2 = (FS+FZ+FSB)/(V2*A2)                                        1961A416
      NRPAS = 0                                                         1961A417
      P2 = (PS*AS+PZ*AP+FS*VS/713+FZ*VP/713-V2*(FS+FZ+FSB)/713*(A2-     1961A418
     1(AS+AP))*(PS*(1.0-YAR)+PZ*YAR)/2.0)/((A2+AS+AP)/2.0)              1961A419
      ITERR = 1                                                         1961A420
 2110 TITER = 1032.673*P2/(RHO2*RIOLD)                                  1961A421
C                CORRECT 1ST VGESS (SUPER. SOL.) IF T IS OUTSIDE RANGE  1961A422
      IF (AMODE) 3650, 3650, 3610                                       1961A423
 3610 IF (START) 3650, 3615, 3650                                       1961A424
 3615 NSTART = NSTART+1                                                 1961A425
      IF (DESOM) 3617, 3616, 3616                                       1961A426
 3616 IF (TITER-1000.) 3620, 3625, 3625                                 1961A427
 3617 IF (TITER-1000.) 3630, 3627, 3627                                 1961A428
 3620 VGESS = VGESS-15240.0                                             1961A429
      GO TO 3600                                                        1961A430
 3625 IF (TITER-6000.) 3650, 3650, 3630                                 1961A431
 3627 IF (TITER-6000.) 3650, 3650, 3620                                 1961A432
 3630 VGESS = VGESS+15240.0                                             1961A433
      GO TO 3600                                                        1961A434
```

```
 3650 CONTINUE                                                          1961A435
 1211 IF (MPASS) 1220, 1215, 1220                                       1961A436
 2200 IF (ABSF(BAKER-1.0)-.00001) 2300, 2300, 2202                      1961A437
 2202 P2 = BAKER*(PS*(1.0-YAR)+PZ*YAR)                                  1961A438
      V2 = VGESS                                                        1961A439
      V2PREV = V2                                                       1961A440
 2205 DENOM = (P2-PS*(1.0-YAR)-PZ*YAR)/2.0                              1961A441
      A2 = (PS*AS+PZ*AP+FS*VS/Z13+FZ*VP/Z13-V2*(FS+FZ+FSB)/Z13)         1961A442
     1-(AS+AP)*(PS*(1.0- YAR)+PZ*YAR+P2)/2.0)/DENOM                     1961A443
      NRPAS = 0                                                         1961A444
      RHO2 = (FS+FZ+FSB)/(V2*A2)                                        1961A445
      ITERR = 1                                                         1961A446
      GO TO 2110                                                        1961A447
C                                                                       1961A448
 2300 CONTINUE                                                          1961A449
      P2 = PS*(1.0-YAR)+PZ*YAR                                          1961A450
      V2 = ((AP*(1.0-YAR)-PS*YAR)*(P2-PS)+FS*VS/Z13+FZ*VP/Z13)/         1961A451
     1((FS+FZ+FSB)/Z13)                                                 1961A452
 2305 TITER = TGESS                                                     1961A453
      GO TO 1211                                                        1961A454
C                                                                       1961A455
 1215 KMAXCP = 1                                                        1961A456
      MPASS = 1                                                         1961A457
      START = 1                                                         1961A458
      GO TO 1226                                                        1961A459
C                                                                       1961A460
 1220 IF (TITER-T) 1222, 1226, 1224                                     1961A461
 1222 KMAXCP = 0                                                        1961A462
      GO TO 1226                                                        1961A463
 1224 KMAXCP = 1                                                        1961A464
 1226 T = TITER                                                         1961A465
      TI=T                                                              1961A466
      GT=LOGF(T)                                                        1961A467
      GTI=GT                                                            1961A468
      PI = P2                                                           1961A469
      PPI = PI                                                          1961A470
      GPI = LOGF(PI)                                                    1961A471
      GPPI=GPI                                                          1961A472
      PNPO = P2/POLD                                                    1961A473
      POLD = P2                                                         1961A474
      DO 1239 I=1, NCODE                                                1961A475
 1233 P(I) = P(I)*PNPO                                                  1961A476
      IF(P(I)) 4000,4001,4002                                           1961A477
 4001 GP(I) = 0.0                                                       1961A478
      GO TO 1239                                                        1961A479
 4000 P(I) = -P(I)                                                      1961A480
 4002 CONTINUE                                                          1961A481
      GP(I) = LOGF(P(I))                                                1961A482
 1239 CONTINUE                                                          1961A483
C                                                                       1961A484
C                                                                       1961A485
      CALL ECUTL                                                        1961A486
C                                                                       1961A487
C                                                                       1961A488
```

```
      IF(SWITCH(4)) 1238,307,1238                                       1961A489
 1238 WRITE OUTPUT TAPE 6,1234,T,PI                                     1961A490
 1234 FORMAT(1H0,2/HCERPP-4 DID NOT CONVERGE T=E15.7,3X,2HP=E15.7)      1961A491
      GO TO 1000                                                        1961A492
  307 SAVE(178)=NN                                                      1961A493
      NPASS = 1                                                         1961A494
      IF (NN) 301, 301, 302                                             1961A495
  302 CONTINUE                                                          1961A496
      DO 303 I=1, NN                                                    1961A497
      IF (TRANT(I)) 310, 303, 310                                       1961A498
  310 CONTINUE                                                          1961A499
      J = NAP+I                                                         1961A500
      IF (T-TRANT(I)) 311, 302, 312                                     1961A501
  312 CONTINUE                                                          1961A502
      CHLP(I) = CHP(J)                                                  1961A503
      GO TO 303                                                         1961A504
  311 CONTINUE                                                          1961A505
      CHSP(I) = CHP(J).                                                 1961A506
  303 CONTINUE                                                          1961A507
  301 CONTINUE                                                          1961A508
      AMW= R/RNWT*ALPHA/PI                                              1961A509
      IF (ABSF(BAKER-1.0)-.0001) 2310, 2310, 333                        1961A510
  333 REERR1 = REERR2                                                   1961A511
      RINEW = RZERO/AMW                                                 1961A512
      REERR2 = RINEW-RIOLD                                              1961A513
C                                                                       1961A514
      IF (ABSF(RIOLD-RINEW)-RDELTA) 1240, 1240, 1230                    1961A515
C                                                                       1961A516
 1230 IF (ITERRR-50) 1235, 1235, 1236                                   1961A517
 1236 WRITE OUTPUT TAPE 6, 1237, RIOLD, RINEW, PI, T                    1961A518
 1237 FORMAT(1H0,5X,28HCONVERGENCE FAILURE   RIOLD=1PE14.6,6HRINEW=E14.6)1961A519
     1,9HPRESSURE=E14.6,12HTEMPERATURE=E14.6)                           1961A520
      GO TO 1000                                                        1961A521
 1235 CONTINUE                                                          1961A522
      IF (NREAS) 3910, 3900, 3910                                       1961A523
 3900 CONTINUE                                                          1961A524
      RI03 = RIOLD                                                      1961A525
      RIOLD = (RIOLD + RINEW)/2.0                                       1961A526
      RI02 = RIOLD                                                      1961A527
      NREAS = 1                                                         1961A528
      ITERRR = ITERRR+1                                                 1961A529
      GO TO 2110                                                        1961A530
 3910 RIOLD = RI02-(REERR2*(RI02-RI03))/(REERR2-REERR1).                1961A531
      RI03 = RI02                                                       1961A532
      RI02 = RIOLD                                                      1961A533
      ITERRR = ITERRR + 1                                               1961A534
      GO TO 2110                                                        1961A535
C                                   CONVERGENCE ON R COMPLETED          1961A536
C                 (AAR 0535) TO (AAR 0630) ITERATES ON R TO DETERMINE V2 1961A537
C                                                                       1961A538
 1240 T2 = TITER                                                        1961A539
      ITERRR = ITERRR + 1                                               1961A540
      RVEL = 100.0*(R2STAG-V2*V2/84.61E09)                              1961A541
      REQUIL=SQMR/(1000.0*ALPHA)                                        1961A542
```

```
      HERR1 = HERR2                                                     1961A543
      HERR2 = HEQUIL-HVEL                                               1961A544
      WRITE OUTPUT TAPE 6, 9002, ITERH, ITERR, ALPHA, AMW, T2, P2, RHO2,1961A545
     1V2, RINEW, RIOLD, HVEL, HEQUIL                                    1961A546
 9002 FORMAT(1H0,I2,I3,2F7.2,3X,1P3E11.3,E12.4,3X,2E10.2,2X,2E12.4)     1961A547
      IF (AMODE) 1244, 1241, 1244                                       1961A548
 1244 IF (ABSF(HVEL-HEQUIL)-HDELTA) 1300, 1300, 1250                    1961A549
 1250 IF (30-ITERH) 1251, 1253, 1253                                    1961A550
 1251 WRITE OUTPUT TAPE 6, 1252, HVEL, HEQUIL, PI, T                    1961A551
 1252 FORMAT(1H0,6X,28HH FAILED TO CONVERGE,  HVEL=1PE14.6,/HHEQUIL=E14.1961A552
     16,9HPRESSURE=E14.6,12HTEMPERATURE=14.6)                           1961A553
      GO TO 1000                                                        1961A554
 1253 CONTINUE                                                          1961A555
      IF (JPASS) 3130, 3105, 3130                                       1961A556
 3130 IF (NOW) 3120, 3131, 3150                                         1961A557
 3131 IF (HERR2) 3132, 3132, 3133                                       1961A558
 3132 MERR = -1                                                         1961A559
      GO TO 3135                                                        1961A560
 3133 MERR = 1                                                          1961A561
 3135 IF (MERR-NERR) 3110, 3140, 3110                                   1961A562
 3140 NOW = 1                                                           1961A563
 3150 CONTINUE                                                          1961A564
      V2 = V2PREV-((V2PREV-V2OLD)*HERR2/(HERR2-HERR1))                  1961A565
      IF(ABSF(V2-V2PREV)-VDELTA)7010,7010,7001                          1961A566
 7001 IF(V2-V2PREV)7002,7002,7003                                       1961A567
 7002 V2=V2PREV-VDELTA                                                  1961A568
      GO TO 7010                                                        1961A569
 7003 V2=V2PREV+ VDELTA                                                 1961A570
 7010 CONTINUE                                                          1961A571
      V2OLD = V2PREV                                                    1961A572
      V2PREV = V2                                                       1961A573
      GO TO 1245                                                        1961A574
 3105 IF (HERR2) 3106, 3106, 3107                                       1961A575
 3106 NERR = -1                                                         1961A576
      GO TO 3108                                                        1961A577
 3107 NERR = 1                                                          1961A578
 3108 JPASS = 1                                                         1961A579
 3110 CONTINUE                                                          1961A580
 2050 IF (HEQUIL-HVEL) 1260, 1300, 1254                                 1961A581
 2310 HVEL = 100.0*(H2STAG-V2*V2/84.61E09)                              1961A582
      HEQUIL=SUMH/(1000.0*ALPHA)                                        1961A583
      T2 = TITER                                                        1961A584
      RHO2 = 0.0                                                        1961A585
      RINEW = 0.0                                                       1961A586
      WRITE OUTPUT TAPE 6, 9002, ITERH, ITERR, ALPHA, AMW, T2, P2, RHO2,1961A587
     1V2, RINEW, RIOLD, HVEL, HEQUIL                                    1961A588
      HE1 = HE2                                                         1961A589
      HE2 = (HVEL-HEQUIL)/HVEL                                          1961A590
C                                                                       1961A591
      IF (ABSF(HE2)-.001) 2380, 2380, 2311                              1961A592
C                                                                       1961A593
 2380 AMW = FORMWT*ALPHA/PI                                             1961A594
      RHO2 = 1033.25*PI*AMW/(RZERO*T)                                   1961A595
      A2 = (FS+FZ+FSB)/(RHO2*V2)                                        1961A596
```

```
      NFPOS = 0                                                         1961A597
      GO TO 1300                                                        1961A598
 2311 IF (NFPOS) 2370, 2317, 2370                                       1961A599
 2317 TB1 = T2                                                          1961A600
      IF (HVEL-HEQUIL) 2330, 1300, 2350                                 1961A601
 2330 T2 = T2-TDELTA                                                    1961A602
      GO TO 2360                                                        1961A603
 2350 T2 = T2+TDELTA                                                    1961A604
 2360 TB2 = T2                                                          1961A605
      NFPOS = 1                                                         1961A606
 2365 ITERM = ITERM+1                                                   1961A607
      TITER = T2                                                        1961A608
      IF (30-ITERM) 1251, 1211, 1211                                    1961A609
 2370 T2 = (HE2*TB1-HE1*TB2)/(HE2-HE1)                                  1961A610
      IF (T2-250.0) 2371, 2377, 2373                                    1961A611
 2371 T2 = 250.0                                                        1961A612
      GO TO 2377                                                        1961A613
 2373 IF (T2-6000.0) 2377, 2377, 2375                                   1961A614
 2375 T2 = 6000.0                                                       1961A615
 2377 TB1 = TB2                                                         1961A616
      TB2 = T2                                                          1961A617
      GO TO 2365                                                        1961A618
C                                                                       1961A619
 1254 CONTINUE                                                          1961A620
      V2OLD = V2PREV                                                    1961A621
      IF (AMODE) 3002, 1241, 3003                                       1961A622
 3002 IF (JK) 1256, 1256, 1255                                          1961A623
 1255 VDELTA = VDELTA/2.0                                               1961A624
 1256 V2 = V2-VDELTA                                                    1961A625
      V2PREV = V2                                                       1961A626
      JK = -1                                                           1961A627
      GO TO 1245                                                        1961A628
 1260 CONTINUE                                                          1961A629
      V2OLD = V2PREV                                                    1961A630
      IF (AMODE) 3003, 1241, 3002                                       1961A631
 3003 IF (JK) 1261, 1262, 1262                                          1961A632
 1261 VDELTA = VDELTA/2.0                                               1961A633
 1262 V2 = V2+VDELTA                                                    1961A634
      V2PREV = V2                                                       1961A635
      JK = 1                                                            1961A636
      GO TO 1245                                                        1961A637
C                 IF RUNNING PROFILE PRINT OUT SPECIES AND INCREMENT V2 1961A638
 1241 CONTINUE                                                          1961A639
      DO 9100 I=1, NAM                                                  1961A640
 9100 TEMP1(I) = P(I)/ALPHA                                             1961A641
      WRITE OUTPUT TAPE 6, 9005,(NOMEN(I,1),NOMEN(I,2),TEMP1(I),I=1,NAM)1961A642
 9005 FORMAT(1X,A6,A5,1PE14.6,5X,A6,A5,E14.6,5X,A6,A5,E14.6)            1961A643
      IF (VLIMIT-V2) 1243, 1243, 1242                                   1961A644
 1242 V2 = V2+VDELTA                                                    1961A645
 1245 IF (ABIE) 2105, 2205, 2105                                        1961A646
C                                                                       1961A647
C                 (AAR631) TO (AAR690) EXPANDS (S=CONST.) TO INPUT P OR A 1961A648
C                                                                       1961A649
C                 IF EXPANSION ONLY (NSET3=0), CONVERT NECESSARY UNITS  1961A650
```

```
 5000 A2 = A2/.001076                                                  1961A651
      Px = Px/2116.4                                                   1961A652
      PDELTA = PDELTA*.0004725                                         1961A653
      FS = FS/.002207                                                  1961A654
      F7 = F7/.002207                                                  1961A655
      FSH = FSH/.002207                                                1961A656
      AEXP = AEXP*929.36803                                            1961A657
C                                                                      1961A658
 1300 CONTINUE                                                         1961A659
      IF (AEXP) 1310, 1307, 1310                                       1961A660
 1307 IF (ARATIO) 1310, 1310, 1305                                     1961A661
 1305 AEXP = A2*ARATIO                                                 1961A662
 1310 CONTINUE                                                         1961A663
      SZERO = SUMS/ALPHA                                               1961A664
      SSSS = SZERO/1000.0                                              1961A665
 1350 NRS = 1                                                          1961A666
      CALL SETSWP(88)                                                  1961A667
      P1 = Px                                                          1961A668
      KMAXCP = 0                                                       1961A669
C                                                                      1961A670
      CALL EQUIL                                                       1961A671
C                                                                      1961A672
      SSSS = SUMS/(ALPHA*1000.0)                                       1961A673
      Tx = T                                                           1961A674
      Vx = SQRTF((100.0*H2STAG-SUMH/(1000.0*ALPHA))*84.61E07)          1961A675
      AMWX = FORMWT*ALPHA/P1                                           1961A676
      RHOX = Px*1033.25*AMWX/(RZERO*Tx)                                1961A677
      E1 = E2                                                          1961A678
      Ax = (FS+F7+FSH)/(RHOX*VX)                                       1961A679
      E2 = (AEXP-AX)/AEXP                                              1961A680
 3500 IF (AEXP) 3505, 3599, 3505                                       1961A681
C                                                                      1961A682
 3505 IF (ABSF(E2)-.001) 3599, 3599, 3510                              1961A683
C                                                                      1961A684
 3510 IF (NFPOS) 3580, 3520, 3580                                      1961A685
 3520 NFPOS = 1                                                        1961A686
      PX0 = P1                                                         1961A687
      IF (AX-AEXP) 3522, 3599, 3542                                    1961A688
 3522 Px = Px-PDELTA                                                   1961A689
 3523 IF (Px) 3524, 3524, 3560                                         1961A69.
 3524 PDELTA = PDELTA/2.0                                              1961A691
      Px = Px+PDELTA                                                   1961A692
      GO TO 3523                                                       1961A693
 3542 Px = Px+PDELTA                                                   1961A694
 3543 IF (Px) 3544, 3544, 3560                                         1961A695
 3544 PDELTA = PDELTA/2.0                                              1961A696
      Px = Px-PDELTA                                                   1961A697
      GO TO 3543                                                       1961A698
 3560 ITERA = ITERA+1                                                  1961A699
      IF (50-ITERA) 3565, 1350, 1350                                   1961A700
 3580 Px = (E2*PX0-E1*P1)/(E2-E1)                                      1961A701
      PX0 = P1                                                         1961A702
      IF (Px) 3585, 3585, 3560                                         1961A703
 3585 Px = (PX0+.0001)/2.0                                             1961A704
```

```
      GO TO 3560                                                        1961A705
 3565 WRITE OUTPUT TAPE 6, 3566                                         1961A706
 3566 FORMAT(1H0,27HAREA NOT MATCHED IN 50 TRYS)                        1961A707
      GO TO 1000                                                        1961A708
 3599 NERUS = 0                                                         1961A709
      IF (NSETS) 5050, 5030, 5050                                       1961A710
C                                                                       1961A711
C                CONVERT TO ENGINEERING UNITS                           1961A712
C                                                                       1961A713
 5050 CONTINUE                                                          1961A714
      PENG = 2116.4*P2                                                  1961A715
      AENG = .001076*(AP+AS)*AHLE                                       1961A716
      TENG = 1.8*T2                                                     1961A717
      RHOENG = 62.43*RHO2                                               1961A718
      VENG = .03281*V2                                                  1961A719
      HENG = 18.*HEQUIL                                                 1961A720
 5030 CONTINUE                                                          1961A721
      FS = .002207*FS                                                   1961A722
      FSR = FSR*.002207                                                 1961A723
      FZ = .002207*FZ                                                   1961A724
      AEXP = AEXP*.001076                                               1961A725
C                                                                       1961A726
C                CALCULATE THRUST, SPECIFIC IMPULSE AND AUG. FACTOR     1961A727
C                                                                       1961A728
      EM2 = VENG/SQRTF(1545.0*TENG*G*GAMA/AMW)                          1961A729
      A2 = (FS+FZ+FSR)/(RHOENG*VENG)                                    1961A730
      FNT1 = FS*V8/32.2                                                 1961A731
      FNT2 = (FS+FZ+FSR)/32.2                                           1961A732
      FN2 = FNT2*VENG-FNT1+A2  *(PENG      -P8)                         1961A733
      FNX = FNT2*VX*.03281-FNT1+.001076*AX*(P1*2116.4-P8)               1961A734
      SIAUG2 = FN2/(FZ+FSR)                                             1961A735
      SIAUGX = FNX/(FZ+FSR)                                             1961A736
      FAAR2 = SIAUG2/SIR                                                1961A737
      FAARX = SIAUGX/SIR                                                1961A738
      PX = 2116.4*PX                                                    1961A739
      IF (NSETS) 5080, 1010, 5080                                       1961A740
C                                                                       1961A741
C                OUTPUT FOR THIS CASE                                   1961A742
C                                                                       1961A743
 5080 CONTINUE                                                          1961A744
      WRITE OUTPUT TAPE 6, 1301                                         1961A745
 1301 FORMAT(1H0,47HSOLUTION OBTAINED/16X,8HPRESSURE,3X,11HTEMPERATURE,41961A746
     1X,8HENTHALPY,5X,8HVELOCITY,6X,7HDENSITY,7X,4HAREA,6X,9HMACH. NO.,51961A747
     2X,7HENTROPY)                                                      1961A748
      WRITE OUTPUT TAPE 6, 1302, PENG, TENG, HENG, VENG, RHOENG, A2, EM21961A749
     1,SSSS                                                             1961A750
 1302 FORMAT(1H0,2X,7HSTA. 2 ,3X,1PBE13.4)                              1961A751
      TX = 1.8*TX                                                       1961A752
      HX = (SUMH/(1000.0*ALPHA))*18.0                                   1961A753
      VX = .03281*VX                                                    1961A754
      RHOX = 62.43*RHOX                                                 1961A755
      AX = .001076*AX                                                   1961A756
      EMX = VX/SQRTF(1545.0*TX*G*GAMA/AMWX)                             1961A757
      WRITE OUTPUT TAPE 6, 1303, PX, TX, HX, VX, RHOX, AX, EMX, SSSS    1961A758
```

```
1303 FORMAT(1H0,2X,7HEXHAUST,3X,1P8E13.4)                                1961A759
     WRITE OUTPUT TAPE 6, 1304, FN2, SIAUG2, FAAR2, FNX, SIAUGX, FAARX 1961A760
1304 FORMAT(//19X,10HSTATION =2,51X,7HEXHAUST//3X,10HNET THRUST,8X,7HIS1961A761
    1 AUG.,8X,11HAUG. FACTOR,15X,10HNET THRUST,8X,7HIS AUG.,8X,11HAUG. 1961A762
    2FACTOR//1PE12.3,2E17.3,E25.3,2E17.3)                                1961A763
     WRITE OUTPUT TAPE 6, 9010                                           1961A764
1243 GO TO 1000                                                          1961A765
9009 FORMAT(1H0)                                                         1961A766
9010 FORMAT(1H1)                                                         1961A767
     END(1,0,0,1,0,0,0,0,0,1,0,0,0,0,0)
```

STORAGE NOT USED BY PROGRAM

DEC	OCT	DEC	OCT
3155	06123	16834	40702

STORAGE LOCATIONS FOR VARIABLES APPEARING IN COMMON STATEMENTS

	DEC	OCT		DEC	OCT		DEC	OCT		DEC	OCT		DEC	OCT
A0	30742	74026	AL1	24818	60362	ALPHA	24820	60364	A	30697	73751	AVC	24793	60331
AVM	24794	60332	AZERO	30712	73770	BETA1	23589	56045	BETA	23591	56047	B	24781	60315
CFROZE	32080	76520	CGAMMA	24784	60320	CHAL	26901	64425	CHGAM	24789	60325	CHLP	25093	61005
CHMOLS	24833	60401	CHP	27103	64737	CHSPHT	24790	60326	CHSP	25078	60756	CHT	26903	64427
CN	32099	76543	COMMON	32561	77461	COMPC	30973	74375	COMPH	30792	74110	COMPM	30842	74172
COMP	31723	75753	CRTA	32084	76524	CRTH	32086	76526	CRTMS	32085	76525	CRTM	32083	76523
CRTN	32082	76522	CRTP	32081	76521	CRTS	32087	76527	C	25993	62611	CST	23586	56042
D1	24933	60545	DCP	16886	40756	DENSL	27139	65003	DENS	27187	65063	DM	24806	60346
DMAX	23588	56044	DP	24805	60345	D	25393	61401	DS	24804	60344	DUMAX1	23585	56041
DUMAX2	23584	56040	DUMAX	23583	56037	ECONDL	27367	65347	ECONDS	27547	65633	EGAMMA	24783	60317
EHZERO	27104	64740	EQAL	26697	64111	EQAREA	16898	41002	EQGAM	24787	60323	EQIMP1	24799	60337
EQIMP	24800	60340	EQLP	25063	60747	EQMOLS	24832	60400	EQP	26899	64423	EQSPHT	24788	60324
EQSP	25048	60730	EQT	26699	64113	F	28747	70113	ESZERO	27105	64741	ETA	23693	56215
EGAMMA	24782	60316	FHS	24808	60350	FHZERO	24829	60375	FORMWT	27140	65004	FREXIT	16900	41004
FP	24807	60347	FRAC	25193	61151	FRIMP1	24801	60341	FRIMP	24802	60342	FRSPHT	24786	60322
FRT	24831	60377	F	26093	62755	FSZERO	24828	60374	GAL1	24817	60361	GALPHA	24819	60363
GAM	24792	60330	GCHAL	26900	64424	GCHP	27003	64573	GCHT	26902	64426	GEQAL	26696	64110
GEQP	26799	64257	GFHT	26698	64112	GFRT	24830	60376	GF1	26193	63121	GREXIT	27106	64742
GP1	27108	64744	GPPI	24795	60333	GPP	24797	60335	GP	26393	63431	GRATIO	24815	60357
GT1	24823	60367	GT	24825	60371	HCOMR	27157	65025	H	25893	62445	HZERO1	24827	60373
HZERO	27142	65016	ICASE	17137	41361	IDEN	31795	76063	ID	31783	76047	IFILE	17136	41360
IMC	17139	41363	IREWE	17131	41353	I	17130	41352	JOMMON	32561	77461	KD	17135	41357
KGAMCP	16899	41003	KMAXCP	16895	40777	KQ	17134	41356	KPRINT	16894	40776	KVAPOR	16897	41001
LABEL	32079	76517	LBLO	17281	41001	LCON	17280	41600	LCOUNT	32103	76547	LETTER	17133	41355
LIDSL	24762	60132	LNAME	23481	55671	NA1	32123	76573	NAM1	32120	76570	NAME	31859	76163
AMN1	32115	76563	NAMN21	16889	40771	NAMN2	32114	76562	NAMN3	32113	76561	NAMN4	32112	76560
NAMNES	32106	76552	NAMNIL	16890	40772	NAMN	32124	76574	NAM	32127	76577	NAMIIL	16891	40773
NAM1	32118	76566	NAM21L	16892	40774	NAM2	32117	76565	NAM3	32116	76564	NAMIL	16887	40767
NAN	32125	76575	NA	32130	76602	NH	17132	41354	NCODE	32105	76551	NCOMP	30923	74313
NEST	32107	76553	NHSAVE	16893	40775	NHS	23482	55672	NITER1	32108	76554	NITERA	32109	76555
NITER	32110	76556	NLISP	32104	76550	NM1	32122	76572	NMN1	32119	76567	NMN	32126	76576
NN	32129	76601	NN1	32121	76571	NNIL	16888	40770	NN	32128	76600	NOCP	16896	41000
NOEXH	16888	40744	NOMENL	31825	76121	NOMEN	32059	76473	NUMENS	31855	76157	NOTWT	23581	55051
NPROM	32111	76557	NREACT	30843	74173	N	32131	76603	NX	16835	40703	OMEGA	23590	56046
P1	26293	63265	PERC	26495	63577	PEXIT	27107	64743	PFROZE	24785	60321	PI	27109	64745
PO	26494	63576	PPI	24796	60334	PP	24798	60336	P	26493	63575	Q1	25033	60711
Q	25693	62135	RATIO	24816	60360	RATIOS	30858	74212	R	32100	76544	S1	25293	61315
SAP	24791	60327	SAVENX	16851	40723	SAVEPX	16867	40743	SAVE	26695	64107	SPIMP	24803	60343
S	25793	62301	STORE	29197	71015	SUMP1	24814	60356	SUMP2	24813	60355	SUMM	24812	60354
SUMS1	24811	60353	SUMS2	24810	60352	SUMS	24809	60351	SWITCH	23582	56036	SZERO	27141	65005
T1	24824	60370	TEMP1	32431	77257	TEMP2	32331	77113	TEMP3	32231	76747	TEQIM1	16870	40746
TEQIMP	16871	40747	TGAMMA	17144	41370	THAL	17146	41372	THCP	17279	41577	THMOLS	17141	41365
THPI	17140	41364	THP	17247	41337	THSPHT	17143	41367	THT	17147	41373	THZERO	17145	41371
TRANI	27172	65044	TRTEMP	24821	60365	T	24826	60372	TSPIMP	16869	40745	TSZERO	17142	41366
TT	24822	60366	UMAX	23587	56043	VO	30727	74007	VECTOR	20281	47471	V	25493	61625
WBLOR	22881	54231	WCON	22881	54241	WFL	30873	74231	W	25593	61771	WSYS1	31857	76161

STORAGE LOCATIONS FOR VARIABLES APPEARING IN DIMENSION AND EQUIVALENCE STATEMENTS

	DEC	OCT		DEC	OCT		DEC	OCT		DEC	OCT		DEC	OCT
CASE	3154	06122												

STORAGE LOCATIONS FOR VARIABLES NOT APPEARING IN COMMON, DIMENSION, OR EQUIVALENCE STATEMENT

	DEC	OCT		DEC	OCT		DEC	OCT		DEC	OCT		DEC	OCT
A2	3144	06110	A8	3143	06107	ABLE8	3142	06106	ABLE	3141	06105	AENG	3140	06104
AEXP	3139	06103	AJ	3138	06102	AMODE	3137	06101	AMW	3136	06100	AMWX	3135	06077
AP	3134	06076	ARATIO	3133	06075	AS	3132	06074	AX	3131	06073	BAKER	3130	06072
DENOM	3129	06071	E1	3128	06070	F2	3127	06067	EM2	3126	06066	EM8	3125	06065
EMP	3124	06064	EMS	3123	06063	EMX	3122	06062	FAAR2	3121	06061	FAARX	3120	06060
FN2	3119	06057	FNT1	3118	06056	FNT2	3117	06055	FNX	3116	06054	FS8	3115	06053
FS	3114	06052	FZ	3113	06051	GAM1	3112	06050	GAM2	3111	06047	GAM3	3110	06046
GAM4M	3109	06045	GAMSRT	3108	06044	GAM6G	3107	06043	GAM77	3106	06042	GAM88	3105	06041
GAMA	3104	06040	GAMMA	3103	06037	GMSAIR	3102	06036	GMSROC	3101	06035	GMSSB	3100	06034
G	3099	06033	GTI	3098	06032	H2STAG	3097	06031	HDELTA	3096	06030	HE1	3095	06027
HE2	3094	06026	HENG	3093	06025	HEQUIL	3092	06024	HERR1	3091	06023	HERR2	3090	06022
HHO	3089	06021	HPSTAG	3088	06020	HS0	3087	06017	HS00	3086	06016	HSHSTG	3085	06015
HSSTAG	3084	06013	HVEL	3083	06013	HX	3082	06012	ITERA	3081	06011	ITERH	3080	06010
ITERR	3079	06007	JAX	3078	06006	JK	3077	06005	JPASS	3076	06004	J	3075	06003
MERR	3074	06002	MPASS	3073	06001	N2	3072	06000	NERR	3071	05777	NFPOS	3070	05776
NOM	3069	05775	NPASS	3068	05774	NPHEAD	3067	05773	NRPAS	3066	05772	NSET5	3065	05771
NSET	3064	05770	NSTART	3063	05767	P2	3062	05766	P8	3061	05765	PDELTA	3060	05764
PERG	3059	05763	PNPO	3058	05762	POLD	3057	05761	PS0	3056	05760	PS	3055	05757
PXO	3054	05756	PX	3053	05755	P7	3052	05754	RDELTA	3051	05753	RERR1	3050	05752
RERR2	3049	05751	RHO2	3048	05750	RHO8	3047	05747	RHOENG	3046	05746	RHOX	3045	05745
RINEW	3044	05744	RIO2	3043	05743	RIO3	3042	05742	RIOLD	3041	05741	RZERO	3040	05740
SIAOG2	3039	05737	SIAOGX	3038	05736	SIR	3037	05735	SSSS	3036	05734	START	3035	05733
SVA8	3034	05732	SVAB	3033	05731	SVAP	3032	05730	SVAS	3031	05727	SVBK	3030	05726
SVFS8	3029	05725	SVFS	3028	05724	SVFZ	3027	05723	SVGAM	3026	05722	SVHP	3025	05721
SVHS0	3024	05720	SVHS00	3023	05717	SVMH	3022	05716	SVMOD	3021	05715	SVMP	3020	05714
SVMS	3019	05713	SVMW	3018	05712	SVPR	3017	05711	SVPS0	3016	05710	SVPS	3015	05707
SVPZ	3014	05706	SVTM	3013	05705	SVTG	3012	05704	SVTS0	3011	05703	SVVO	3010	05702
SVVO	3009	05701	SVVL	3008	05700	SVVP	3007	05677	SVTAM	3006	05676	T2	3005	05675
T8	3004	05674	T01	3003	05673	TH2	3002	05672	TDELTA	3001	05671	TENG	3000	05670
TGESS	2999	05667	TI	2998	05666	TITER	2997	05665	TS0	2996	05664	TS	2995	05663
TX	2994	05662	V2OLD	2993	05661	V2PREV	2992	05660	V2	2991	05657	V8	2990	05656
VDELTA	2989	05655	VENG	2988	05654	VGESS	2987	05653	VLIMIT	2986	05652	VP	2985	05651
VS	2984	05650	VX	2983	05647	TAR	2982	05646	Z13	2981	05645			

SYMBOLS AND LOCATIONS FOR SOURCE PROGRAM FORMAT STATEMENTS.

	EFN	LOC		EFN	LOC		EFN	LOC		EFN	LOC		EFN	LOC
8)V8	200	05624	8)V9	201	05623	8)6A	202	05411	8)V9	1001	05626	8)V8	1003	05622
8)VC	1004	05602	8)VD	1005	05551	8)VE	1006	05527	8)VF	1007	05500	8)VG	1008	05466
8)VJ	1011	05427	8)VK	1012	05377	8)VL	1013	05302	8)VM	1014	05353	8)VN	1015	05344
8)VS	1020	05333	8)VT	1021	05313	8)119	1062	05420	8)14T	1181	05322	8)16I	1234	05216
8)10L	1237	05202	8)174	1252	05152	8)18L	1301	05113	8)18M	1302	05054	8)18N	1303	05057
8)1HO	1304	05052	8)3FE	3566	05121	8)3GI	3602	05227	8)8P9	9001	05250	8)8PA	9002	05164
8)8PB	9003	05131	8)8PH	9009	05017	8)8PI	9010	05016						

LOCATIONS FOR OTHER SYMBOLS NOT APPEARING IN SOURCE PROGRAM

	DEC	OCT		DEC	OCT		DEC	OCT		DEC	OCT		DEC	OCT
1)	2967	05627	2)	2516	04724	3)	2529	04741	4)	32767	77777	6)	2568	05010
C)G0	2977	05641	C)G1	2978	05642	C)G3	2979	05643	C)G4	2980	05644	D)401	23	00027
D)42H	1591	03067	D)420	1620	03124	D)44F	2084	04044	D)457	2514	04722	E)2	103	00147
E)4	155	00233	E)5	194	00302	E)6	245	00365	E)7	304	00460	E)9	400	00620
E)C	422	00646	E)E	434	00662	E)I	491	00753	E)M	506	00772	E)N	514	01002
E)T	574	01076	E)U	612	01144	E)10	645	01205	E)11	708	01304	E)17	1064	02050
E)2J	1599	03077	E)2K	1609	03111	E)2L	1613	03115	E)2N	1619	03123	E)4G	2089	04051

LOCATIONS OF NAMES IN TRANSFER VECTOR

	DEC	OCT		DEC	OCT		DEC	OCT		DEC	OCT		DEC	OCT
CALC	13	00015	CERPP4	3	00003	EMESS	10	00012	EQUIL	15	00017	EXP(3	9	00011
LOG	14	00016	SETSWP	12	00014	SETSWT	11	00013	SQRT	5	00005	(FIL)	7	00007
(FPT)	0	00000	(RTN)	2	00002	(SLI)	4	00004	(SLO)	8	00010	(STH)	6	00006
(TSH)	1	00001												

ENTRY POINTS TO SUBROUTINES NOT OUTPUT FROM LIBRARY

CALC CERPP4 EMESS EQUIL EXP(3 LOG SETSWP SETSWT SQRT (FIL)
(FPT) (RTN) (SLI) (SLO) (STH) (TSH)

EXTERNAL FORMULA NUMBERS WITH CORRESPONDING INTERNAL FORMULA NUMBERS AND OCTAL LOCATIONS

EFN	IFN	LOC	EFN	IFN	LOC	EFN	IFN	LOC	EFN	IFN	LOC	EFN	IFN	LOC
1000	75	00030	210	110	00151	220	112	00160	230	122	00235	240	131	00304
250	142	00367	260	151	00462	265	160	00535	500	180	00622	501	181	00625
502	184	00640	503	186	00650	505	187	00656	520	189	00664	530	199	00743
1050	200	00749	1052	201	00745	1054	202	00747	1056	204	00754	1058	205	00756
1060	207	00763	1062	208	00765	1064	210	00773	1066	212	01004	1068	213	01006
1070	214	01010	1072	216	01015	1074	217	01017	1100	218	01023	1112	224	01100
1122	231	01146	1123	237	01201	1132	239	01207	1142	246	01306	1152	253	01351
1160	258	01434	351	269	01507	1010	280	01615	5100	306	02072	4011	342	02240
4010	344	02243	4012	345	02245	1216	347	02254	1217	350	02263	3600	351	02267
3601	352	02279	3603	355	02310	2100	357	02312	2105	360	02324	2110	364	02420
3610	366	02433	3615	367	02437	3616	369	02446	3617	370	02453	3620	371	02460
3625	373	02469	3627	374	02471	3630	375	02476	3650	377	02512	1211	378	02502
2200	379	02506	2202	380	02515	2205	383	02536	2300	389	02642	2305	392	02713
1215	394	02719	1220	398	02730	1222	399	02734	1224	401	02737	1226	402	02741
1233	413	03003	4001	415	03012	4000	417	03015	4002	418	03017	1239	420	03026
1238	423	03037	307	426	03054	302	429	03070	310	432	03100	312	435	03112
311	438	03119	303	440	03120	301	441	03125	333	444	03140	1230	448	03157
1236	449	03164	1235	452	03205	3900	454	03211	3910	461	03227	1240	466	03254
1244	475	03347	1250	476	03356	1251	477	03362	1253	480	03403	3130	482	03405
3131	483	03411	3132	484	03414	3133	486	03417	3135	487	03421	3140	488	03426
3150	489	03430	7001	492	03451	7002	493	03455	7003	495	03461	7010	496	03464
3105	500	03471	3106	501	03474	3107	503	03477	3108	504	03501	3110	505	03503
2250	506	03509	2310	507	03510	2380	517	03610	2311	522	03637	2317	523	03643
2330	525	03651	2350	527	03655	2360	528	03660	2365	530	03664	2370	533	03676
2371	535	03715	2373	537	03720	2375	538	03725	2377	539	03727	1254	542	03734
3002	545	03741	1255	546	03745	1256	547	03750	1260	551	03760	3003	554	03765

1261	555	03770	1262	556	03773	1241	560	04003	4100	562	04006
1242	569	04041	1245	570	04045	1300	571	04053	1300	578	04100
1307	580	04104	1305	581	04110	1310	582	04113	1350	585	04121
3500	599	04225	3505	600	04227	3510	601	04235	3520	602	04241
3522	605	04251	3523	606	04254	3524	607	04257	3542	610	04266
3543	611	04271	3544	612	04274	3560	615	04303	3580	617	04313
3585	620	04333	3565	622	04340	3599	624	04347	5050	626	04353
5030	633	04402	5080	650	04537	1243	665	04723			

```
      SUBROUTINE CERPP4                                                 19618003
C                                                                       19618004
C     GENERAL DIMENSION STATEMENT          IIII
```

```
      COMMON LNAME,NOTWT,WCON,WBLOK,VECTOR,LBLO,LCON                    19618057
C     MORE STORAGE FOR CSTAR                                            19618058
      DIMENSION THCP(32), THP(100)                                      19618059
      COMMON THCP, THP, THT, THAL, THZERO, TGAMMA,                      19618060
     XTHSPHT, TSZERO, THMOLS, THPI                                      19618061
C     BOEING COMMON STORAGE                                             19618062
      COMMON IML, I, ICASE, IFILE, KD, KO, LETTER, NB                   19618063
      COMMON IRENE                                                      19618064
      DIMENSION IRENE(231)                                              19618065
      COMMON FPEXIT, KGAMCP                                             19618066
      COMMON EQAREA                                                     19618067
      COMMON KVAPOR                                                     19618068
      COMMON NOCP                                                       19618069
     1,KMAXCP                                                           19618070
     1, KPRINT, NHSAVE                                                  19618071
     1,NAN2IL,NAN1IL,NAMNIL                                             19618072
     1,NAMN2I, NNIL, NANIL                                              19618073
      COMMON DCP                                                        19618074
      DIMENSION DCP(15)                                                 19618075
      COMMON IEQIMP, TEQIM1, TSPIMP, NOEXH                              19618076
      COMMON SAVEPX, SAVENX, NX                                         19618077
      DIMENSION SAVEPX(16), SAVENX(16)                                  19618078
C     END OF COMMON STORAGE      QQQQQQQQQQQQQQQQQQQQQQQQQQQQQQQQQQQQQQ19618079
C     MAIN ENTRY                                                        19618080
    1   CONTINUE                                                        19618081
      NOEXH = 0                                                         19618082
      NOCP = 0                                                          19618083
      KSTOP = 0                                                         19618084
      KMAXCP = 1                                                        19618085
      KGAMCP = 1                                                        19618086
      KVAPOR = 0                                                        19618087
      KPRINT = 0                                                        19618088
      NHSAVE = -1                                                       19618089
            KO=6                                                        19618090
            KD=6                                                        19618091
  101 CONTINUE                                                          19618092
  100 CALL SETCON                                                       19618093
        ICASE=0                                                         19618094
      NEST=NESET(NO MEN)                                                19618095
  102 CONTINUE                                                          19618096
      CALL BINARY(WBLOK,VECTOR,LNAME,LBLO,LCON,WCON)                    19618097
C     CASE ENTRY                                                        19618098
  200 DO 201 I=1,100                                                    19618099
  201 CALL SETSWT(I)                                                    19618100
      CALL SETSWP (4)                                                   19618101
        ICASE=ICASE+1                                                   19618102
          NPROB=0                                                       19618103
  203 CONTINUE                                                          19618104
C     READ GROUP DEFINITION CARD                                        19618105
  300 NB=0                                                              19618106
  312 CALL CARD (10,1,1)                                                19618107
  305 N=NGROUP(NAME)                                                    19618108
  308 GO TO(400,500,600,700,800,900,1000,1100,1200,3000,1400,101,1200,  19618109
     X1700,1800,1900,2000),N                                            19618110
```

```
      SUBROUTINE CERPP4
C     ERROR
  400 CALL EOFPRT (8)
  301 CALL CARD (10,1,2)
      GO TO 305
C     BLANK
  500 NB=NB+1
      IF (NB-10) 312, 312, 502
  502 PRINT 503
      GO TO 300
  503 FORMAT(57H BLANKS, BLANKS, BLANKS, WILL I NEVER GET ANYTHING DECEN
     XT)
C     SUPPRESS
  600 CALL LISTSP(1)
      GO TO 300
C      ADVANCE THIS COMPOUND WITHIN THE GROUP
  700 CALL LISTSP(2)
      GO TO 300
C     INPUT
  800 CALL READIN
      GO TO 300
C     OPTIONS
  900 CALL SETOPT
      GO TO 300
C     NO ESTIMATES
 1000 CALL ESTEEM
      GO TO 300
C     ESTIMATES
 1100 CALL INEST
      GO TO 300
C     COMPOSITION
C     REACTANTS
 1200 CALL FORM  1
      GO TO 300
 1400 END FILE KO
 1402 CALL SUMARY
 1401 CONTINUE
       CALL EXIT
C     NEW CUSTOMER
C     NEW DATA
C     N = 12 GO TO 101
C      NEW RATIOS FOR MULTI REACTANT SYSTEM
 1700 CONTINUE
C     LIST OF NOT PRECALCULATED ENTHALPIES
 1800 CONTINUE
C     COMMENT
 1900 DO 1901      I=1,10
 1901 IDEN(I)=JOMMON(I)
      GO TO 300
C     MORE EXHAUST CALCULATIONS
 2000 CALL SETSWT (-32)
      GO TO 300
C     EXECUTE PROGRAM
 3000 N=NSERCH(N)
C     N DETERMINED BY LOOKS-CHECK COMPILATION - 3 MEANS COMP.UNKNOWN
```

```
      GO TO (3011,3011,301),N                                          19618165
 3011 CONTINUE                                                         19618166
      IF (SWITCH(32)) 10002, 10001, 10002                              19618167
10001 KSTOP = 1                                                        19618168
      KPRINT = 1                                                       19618169
10002 CONTINUE                                                         19618170
      N=ICASE                                                          19618171
        CALL SETSWS                                                    19618172
      CALL CONST3                                                      19618173
        NITER=1                                                        19618174
            IF(SWITCH(4))      9000,3012,9000                          19618175
 3012 RETURN                                                           19618176
 9000 CONTINUE                                                         19618177
      CALL TRALL                                                       19618178
      CALL DPALL                                                       19618179
 9004 CONTINUE                                                         19618180
 9005 CONTINUE                                                         19618181
 99   FORMAT   (6HOCASE  I5,22H GAVE NO OUTPUT AFTER I5,11H ITERATIONS) 19618182
       WRITEOUTPUT TAPE KD,99,ICASE,NITER                              19618183
       CALL    EXIT                                                    19618184
      END(1,0,0,1,0,0,0,0,0,1,0,0,0,0,0)
```

STORAGE NOT USED BY PROGRAM

DEC	OCT	DEC	OCT
329	00511	16834	40702

STORAGE LOCATIONS FOR VARIABLES APPEARING IN COMMON STATEMENTS

	DEC	OCT		DEC	OCT		DEC	OCT		DEC	OCT		DEC	OCT
AO	30742	74026	AL1	24818	60362	ALPHA	24820	60364	A	30697	73751	AVC	24793	60331
AVM	24794	60332	AZERO	30712	73770	BETA1	23589	56045	BETA	23591	56047	B	24781	60315
CFROZE	32080	76520	CGAMMA	24784	60320	CHAL	26901	64425	CHGAM	24789	60325	CHLP	25093	61005
CHMOLS	24833	60401	CHP	27103	64737	CHSPHT	24790	60326	CHSP	25078	60766	CHT	26903	64427
CN	32099	76543	COMMON	32561	77461	COMPC	30973	74375	COMPH	30792	74110	COMPM	30842	74172
COMP	31723	75753	CRTA	32084	76524	CRTH	32086	76526	CRTHS	32085	76525	CRTM	32083	76523
CRTN	32082	76522	CRTP	32081	76521	CRTS	32087	76527	C	25993	62611	CST	23586	56042
D1	24933	60545	DCP	16886	40766	DENSL	27139	65003	DENS	27187	65063	DH	24806	60346
DMAX	23588	56044	DP	24805	60345	D	25393	61461	DS	24804	60344	DUMAX1	23585	56041
DUMAX2	23584	56040	DUMAX	23583	56037	ECONDL	27367	65347	ECONDS	27547	65633	EGAMMA	24783	60317
EHZERO	27104	64740	EQAL	26697	64111	EQAREA	16898	41002	EQGAM	24787	60323	EQIMP1	24799	60337
EQIMP	24800	60340	EQLP	25063	60747	EQMOLS	24832	60400	EQP	26899	64423	EQSPHT	24788	60324
EQSP	25048	60730	EQT	26699	64113	E	28747	70113	ESZERO	27105	64741	ETA	23693	56215
FGAMMA	24782	60316	FHS	24808	60350	FHZERO	24829	60375	FORMWT	27140	65004	FPEXIT	16900	41004
FP	24807	60347	FRAC	25193	61151	FRIMP1	24801	60341	FRIMP	24802	60342	FRSPHT	24786	60322
FRT	24831	60377	F	26093	62755	FSZERO	24828	60374	GAL1	24817	60361	GALPHA	24819	60363
GAM	24792	60330	GCHAL	26900	64424	GCHP	27003	64573	GCHT	26902	64426	GEQAL	26696	64110
GEQP	26799	64257	GEQT	26698	64112	GFRT	24830	60376	GP1	26193	63121	GPEXIT	27106	64742
GPI	27108	64744	GPPI	24795	60333	GPP	24797	60335	GP	26393	63431	GRATIO	24815	60357
GT1	24823	60367	GT	24825	60371	HCORR	27157	65025	H	25893	62445	HZERO1	24827	60373
HZERO	27142	65006	ICASE	17137	41361	IDEN	31795	76053	ID	31783	76047	IFILE	17136	41360
IML	17139	41363	IRENE	17131	41353	I	17138	41362	JOMMON	32561	77461	KD	17135	41357
KGAMCP	16899	41003	KMAXCP	16895	40777	KO	17134	41356	KPRINT	16894	40776	KVAPOR	16897	41001
LABEL	32079	76517	LBLO	17281	41601	LCON	17280	41600	LCOUNT	32103	76547	LETTER	17133	41355
LIQSL	28762	70132	LNAME	23481	55671	NA1	32123	76573	NAM1	32120	76570	NAME	31859	76163
NAMN1	32115	76563	NAMN2I	16889	40771	NAMN2	32114	76562	NAMN3	32113	76561	NAMN4	32112	76560
NAMNES	32106	76552	NAMNIL	16890	40772	NAMN	32124	76574	NAM	32127	76577	NANIIL	16891	40773
NAN1	32118	76566	NAN2IL	16892	40774	NAN2	32117	76565	NAN3	32116	76564	NANIL	16887	40767
NAN	32125	76575	NA	32130	76602	NB	17132	41354	NCODE	32105	76551	NCOMP	30923	74313
NEST	32107	76553	NHSAVE	16893	40775	NHS	23482	55672	NITLR1	32108	76554	NITERA	32109	76555
NITER	32110	76556	NLISP	32104	76550	NM1	32122	76572	NMN1	32119	76567	NMN	32126	76576
NM	32129	76601	NN1	32121	76571	NNIL	16888	40770	NN	32128	76600	NOCP	16896	41000
NOEXH	16868	40744	NOMENL	31825	76121	NOMEN	32059	76473	NOMENS	31855	76157	NOTWT	23081	55051
NPROB	32111	76557	NREACT	30843	74173	N	32131	76603	NX	16835	40703	OMEGA	23590	56046
P1	26293	63265	PERC	26495	63577	PEXIT	27107	64743	PFROZE	24785	60321	PI	27109	64745
PO	26494	63576	PPI	24796	60334	PP	24798	60336	P	26493	63575	Q1	25033	60711
Q	25693	62135	RATIO	24816	60360	RATIOS	30858	74212	R	32100	76544	S1	25293	61315
SAF	24791	60327	SAVENX	16851	40723	SAVEPX	16867	40743	SAVE	26695	64107	SPIMP	24803	60343
S	25793	62301	STORE	29197	71015	SUMF1	24814	60356	SUMF2	24813	60355	SUMH	24812	60354
SUMS1	24811	60353	SUMS2	24810	60352	SUMS	24809	60351	SWITCH	23582	56036	SZERO	27141	65005
T1	24824	60370	TEMP1	32431	77257	TEMP2	32331	77113	TEMP3	32231	76747	TEQIM1	16870	40746
TEQIMP	16871	40747	TGAMMA	17144	41370	THAL	17146	41372	THCP	17279	41577	THMOLS	17141	41365
THPI	17140	41364	THP	17247	41537	THSPHT	17143	41367	THT	17147	41373	THZERO	17145	41371
TRANT	27172	65044	TRTEMP	24821	60365	T	24826	60372	TSPIMP	16869	40745	TSZERO	17142	41366
TT	24822	60366	UMAX	23587	56043	VO	30727	74007	VECTOR	20281	47471	V	25493	61625
WBLOK	22681	54231	WCON	22881	54541	WEL	30873	74231	W	25593	61771	WSYS1	31857	76161

STORAGE LOCATIONS FOR VARIABLES NOT APPEARING IN COMMON, DIMENSION, OR EQUIVALENCE STATEMENT

	DEC	OCT		DEC	OCT		DEC	OCT		DEC	OCT		DEC	OCT
KSTOP	328	00510												

SYMBOLS AND LOCATIONS FOR SOURCE PROGRAM FORMAT STATEMENTS

	EFN	LOC		EFN	LOC		EFN	LOC		EFN	LOC		EFN	LOC
8)33	99	00471	8)FN	503	00504									

LOCATIONS FOR OTHER SYMBOLS NOT APPEARING IN SOURCE PROGRAM

	DEC	OCT		DEC	OCT		DEC	OCT		DEC	OCT		DEC	OCT
1)	325	00505	2)	290	00442	6)	298	00452	C)GO	327	00507	D)407	130	00202
D)408	138	00212	E)7	129	00201	E)9	148	00224	E)B	161	00241	E)C	167	00247
E)D	173	00255	E)E	178	00262	E)F	183	00267	E)G	188	00274	E)H	193	00301
E)J	207	00317	E)K	209	00321	E)L	211	00323	E)O	218	00332	E)101	57	00071

LOCATIONS OF NAMES IN TRANSFER VECTOR

	DEC	OCT		DEC	OCT		DEC	OCT		DEC	OCT		DEC	OCT
BINARY	2	00002	CARD	5	00005	CONST3	21	00025	DPALL	23	00027	EOFPRT	7	00007
ESTEEM	13	00015	EXIT	18	00022	FORM1	15	00017	INEST	14	00016	LISTSP	10	00012
NESET	1	00001	NGROUP	6	00006	NSERCH	19	00023	READIN	11	00013	SETCON	0	00000
SETOPT	12	00014	SETSWP	4	00004	SETSWS	20	00024	SETSWT	3	00003	SUMARY	17	00021
TRALL	22	00026	(EFT)	16	00020	(FIL)	9	00011	(SPH)	8	00010	(STH)	24	00030

ENTRY POINTS TO SUBROUTINES NOT OUTPUT FROM LIBRARY

BINARY	CARD	CONST3	DPALL	EOFPRT	ESTEEM	EXIT	FORM1	INEST	LISTSP
NESET	NGROUP	NSERCH	READIN	SETCON	SETOPT	SETSWP	SETSWS	SETSWT	SUMARY
TRALL	(EFT)	(FIL)	(SPH)	(STH)					

EXTERNAL FORMULA NUMBERS WITH CORRESPONDING INTERNAL FORMULA NUMBERS AND OCTAL LOCATIONS

EFN	IFN	LOC	EFN	IFN	LOC	EFN	IFN	LOC	EFN	IFN	LOC	EFN	IFN	LOC
1	43	00044	101	54	00072	100	55	00072	102	59	00104	200	62	00115
201	63	00120	203	69	00140	300	70	00140	312	71	00142	305	73	00150
308	75	00160	400	76	00203	301	78	00213	500	81	00225	502	83	00235
600	85	00242	700	88	00250	800	91	00256	900	93	00263	1000	95	00270
1100	97	00275	1200	99	00302	1400	101	00306	1402	102	00310	1401	103	00313
1700	105	00320	1800	106	00322	1900	107	00324	1901	108	00325	2000	110	00333
3000	113	00342	3011	116	00355	10001	118	00351	10002	120	00365	3012	126	00404
9000	128	00410	9004	131	00416	9005	132	00416						

```
      SUBROUTINE EMESS(FS,AS,PSO,GAM5RT,GAMMA,EMS)                      1961B203
      ITERMS =0                                                         1961B204
      EMS = 1.0                                                         1961B205
      DEL = .25                                                         1961B206
      FAST = 0.0                                                        1961B207
      FACTOR = FS/(AS*PSO*GAM5RT*32.2)                                  1961B208
      GM102 = (GAMMA-1.0)/2.0                                           1961B209
      GAMEXP = (GAMMA+1.0)/(2.0*(GAMMA-1.0))                            1961B210
  100 EMSLFT = FACTOR*(1.0+GM102*EMS*EMS)**GAMEXP                       1961B211
      ITERMS = ITERMS + 1                                               1961B212
      IF (30-ITERMS) 110, 120, 120                                      1961B213
  110 WRITE OUTPUT TAPE 6, 111, EMS, EMSLFT, DELTMS                     1961B214
  111 FORMAT(1H0,5X,38HNO SOLUTION FOR MS  EMS,EMSLFT,DELTMS=3E20.6)    1961B215
      EMS=0                                                             1961B216
      RETURN                                                            1961B217
  120 ERRP = ERR                                                        1961B218
      ERR = EMSLFT-EMS                                                  1961B219
      IF (FAST) 130, 140, 130                                           1961B220
  140 IF (ERR) 150, 200, 160                                            1961B221
  150 EMSO = EMSP                                                       1961B222
      EMSP = EMS                                                        1961B223
      EMS = EMS-DEL                                                     1961B224
      GO TO 100                                                         1961B225
  130 IF (ABSF(EMS-EMSLFT)-.001) 200, 200, 170                          1961B226
  160 FAST = 1.0                                                        1961B227
  170 EMSO = EMSP                                                       1961B228
      EMSP = EMS                                                        1961B229
      EMS = EMSP-(((EMSP-EMSO)*ERR)/(ERR-ERRP))                         1961B230
      GO TO 100                                                         1961B231
  200 RETURN                                                            1961B232
      END(1,0,0,0,0,0,0,0,0,1,0,0,0,0,0)
```

STORAGE NOT USED BY PROGRAM

DEC	OCT	DEC	OCT
200	00310	32561	77461

STORAGE LOCATIONS FOR VARIABLES NOT APPEARING IN COMMON, DIMENSION, OR EQUIVALENCE STATEMENT

	DEC	OCT		DEC	OCT		DEC	OCT		DEC	OCT		DEC	OCT
DEL	199	00307	DELTMS	198	00306	EMSLFT	197	00305	EMSO	196	00304	EMSP	195	00303
ERRP	194	00302	ERR	193	00301	FACTOR	192	00300	FAST	191	00277	GAMEXP	190	00276
GM102	189	00275	ITERMS	188	00274									

SYMBOLS AND LOCATIONS FOR SOURCE PROGRAM FORMAT STATEMENTS

	EFN	LOC		EFN	LOC		EFN	LOC		EFN	LOC		EFN	LOC
8)3F	111	00267												

LOCATIONS FOR OTHER SYMBOLS NOT APPEARING IN SOURCE PROGRAM

	DEC	OCT		DEC	OCT		DEC	OCT		DEC	OCT		DEC	OCT
1)	184	00270	2)	158	00236	3)	162	00242	6)	168	00250			

LOCATIONS OF NAMES IN TRANSFER VECTOR

	DEC	OCT		DEC	OCT		DEC	OCT		DEC	OCT		DEC	OCT
EXP(3	0	00000	(FIL)	2	00002	(STH)	1	00001						

ENTRY POINTS TO SUBROUTINES NOT OUTPUT FROM LIBRARY

EXP(3 (FIL) (STH)

EXTERNAL FORMULA NUMBERS WITH CORRESPONDING INTERNAL FORMULA NUMBERS AND OCTAL LOCATIONS

EFN	IFN	LOC	EFN	IFN	LOC	EFN	IFN	LOC	EFN	IFN	LOC	EFN	IFN	LOC
100	11	00105	110	14	00131	120	19	00154	140	22	00165	150	23	00170
130	27	00200	160	28	00207	170	29	00211	200	33	00232			

```
      SUBROUTINE EMESS(FS,AS,PSO,GAM5RT,GAMMA,EMS)                      19618303
      ITERMS =0                                                         19618304
      EMS = 1.0                                                         19618305
      DEL = -.5                                                         19618306
      FAST = 0.0                                                        19618307
      FACTOR = FS/(AS*PSO*GAM5RT*32.2)                                  19618308
      GM102 = (GAMMA-1.0)/2.0                                           19618309
      GAMEXP = (GAMMA+1.0)/(2.0*(GAMMA-1.0))                            19618310
  100 EMSLFT = FACTOR*(1.0+GM102*EMS*EMS)**GAMEXP                       19618311
      ITERMS = ITERMS + 1                                               19618312
      IF (30-ITERMS) 110, 120, 120                                      19618313
  110 WRITE OUTPUT TAPE 6, 111, EMS, EMSLFT, DELTMS                     19618314
  111 FORMAT(1H0,5X,38HNO SOLUTION FOR MS  EMS,EMSLFT,DELTMS=3E20.6)    19618315
      EMS=0                                                             19618316
      RETURN                                                            19618317
  120 ERRP = ERR                                                        19618318
      ERR = EMS-EMSLFT                                                  19618319
      IF (FAST) 130, 140, 130                                           19618320
  140 IF (ERR) 160, 200, 150                                            19618321
  150 EMSO = EMSP                                                       19618322
      EMSP = EMS                                                        19618323
      EMS = EMS-DEL                                                     19618324
      GO TO 100                                                         19618325
  130 IF (ABSF(EMS-EMSLFT)-.001) 200, 200, 170                          19618326
  160 FAST = 1.0                                                        19618327
  170 EMSO = EMSP                                                       19618328
      EMSP = EMS                                                        19618329
      EMS = EMSP-(((EMSP-EMSO)*ERR)/(ERR-ERRP))                         19618330
      GO TO 100                                                         19618331
  200 RETURN                                                            19618332
      END(1,0,0,0,0,0,0,0,0,1,0,0,0,0,0)
```

STORAGE NOT USED BY PROGRAM

DEC	OCT	DEC	OCT
201	00311	32561	77461

STORAGE LOCATIONS FOR VARIABLES NOT APPEARING IN COMMON, DIMENSION, OR EQUIVALENCE STATEMENT

	DEC	OCT		DEC	OCT		DEC	OCT		DEC	OCT		DEC	OCT
DEL	200	00310	DELTMS	199	00307	EMSLFT	198	00306	EMSO	197	00305	EMSP	196	00304
ERRP	195	00303	ERR	194	00302	FACTOR	193	00301	FAST	192	00300	GAMEXP	191	00277
GM102	190	00276	ITERMS	189	00275									

SYMBOLS AND LOCATIONS FOR SOURCE PROGRAM FORMAT STATEMENTS

	EFN	LOC		EFN	LOC		EFN	LOC		EFN	LOC		EFN	LOC
8)3F	111	00270												

LOCATIONS FOR OTHER SYMBOLS NOT APPEARING IN SOURCE PROGRAM

	DEC	OCT		DEC	OCT		DEC	OCT		DEC	OCT		DEC	OCT
1)	185	00271	2)	159	00237	3)	163	00243	6)	169	00251			

LOCATIONS OF NAMES IN TRANSFER VECTOR

	DEC	OCT		DEC	OCT		DEC	OCT		DEC	OCT		DEC	OCT
EXP(3	0	00000	(FIL)	2	00002	(STH)	1	00001						

ENTRY POINTS TO SUBROUTINES NOT OUTPUT FROM LIBRARY

EXP(3 (FIL) (STH)

EXTERNAL FORMULA NUMBERS WITH CORRESPONDING INTERNAL FORMULA NUMBERS AND OCTAL LOCATIONS

EFN	IFN	LOC	EFN	IFN	LOC	EFN	IFN	LOC	EFN	IFN	LOC	EFN	IFN	LOC
100	11	00105	110	14	00131	120	19	00154	140	22	00165	150	23	00171
130	27	00201	160	28	00210	170	29	00212	200	33	00233			

```
      SUBROUTINE INEST                                                  19610004
C     GENERAL DIMENSION STATEMENT          IIII
```

```
      GO TO7R05                                                         19610057
 7801 CONTINUE                                                          19610058
      K=1                                                               19610059
      SAVE(170)=0.0                                                     19610060
      SWITCH(84)=1.0                                                    19610061
C     READ ANOTHER ESTIMATE                                             19610062
   36 CONTINUE                                                          19610063
      CALL CARD (5,2,1)                                                 19610064
   63 CONTINUE                                                          19610065
       I=NAMEX(NAME)                                                    19610066
      IF (COMMON) 20, 21, 22                                            19610067
   21 GC = 0.0                                                          19610068
      GO TO 23                                                          19610069
   20 COMMON = -COMMON                                                  19610070
   22 GC = LOGF(COMMON)                                                 19610071
   23 IF (I) 33, 34, 35                                                 19610072
C     PARTIAL PRESSURE ESTIMATES                                        19610073
   35 GO TO (3510,3511),K                                               19610074
 3510 CHP(I)=COMMON                                                     19610075
      GCHP(I)=GC                                                        19610076
        L=LXCHAR(NAME(2))                                               19610077
         GO TO (36,36,7900),L                                           19610078
 7900 I1=I-NAM                                                          19610079
         CHSP(I1)=CHP(I)                                                19610080
         CHLP(I1)=CHP(I)                                                19610081
      GO TO 36                                                          19610082
 3511 EQP(I)=COMMON                                                     19610083
      GEQP(I)=GC                                                        19610084
        L=LXCHAR(NAME(2))                                               19610085
         GO TO (36,36,7901),L                                           19610086
 7901 I1=I-NAM                                                          19610087
      EQSP(I1) = EQP(I)                                                 19610088
      EQLP(I1) = EQP(I)                                                 19610089
      GO TO 36                                                          19610090
C     OTHER ESTIMATES                                                   19610091
   33 IF(I+NEST)34,34,61                                                19610092
   61 GO TO (41,42,43,44,45,46,47,48,49,50),I                           19610093
   41 GO TO 36                                                          19610094
   42  GO TO 241                                                        19610095
   43 GO TO ( 431,432),K                                                19610096
  431 CHT=COMMON                                                        19610097
      GCHT=GC                                                           19610098
         T=CHT                                                          19610099
         CALL LIOSOL                                                    19610100
      GO TO 36                                                          19610101
  432 EQT=COMMON                                                        19610102
      GEQT=GC                                                           19610103
        T=EQT                                                           19610104
         CALL LIOSOL                                                    19610105
      GO TO 36                                                          19610106
   44 GO TO (441,442),K                                                 19610107
  441 CHAL=    COMMON                                                   19610108
      GCHAL=GC                                                          19610109
      GO TO 36                                                          19610110
```

```
  442 EQAL=COMMON                                                    19610111
      GEQAL=GC                                                       19610112
      GO TO 36                                                       19610113
   45 K=1                                                            19610114
      IF(ERLISO(NAME(2))) 36,451,36                                  19610115
  451 SAVE(178)=COMMON                                               19610116
      GO TO 36                                                       19610117
   46 K=2                                                            19610118
      SWITCH(84)=0.0                                                 19610119
      IF(ERLISO(NAME(2))) 36,461,36                                  19610120
  461 SAVE(179)=COMMON                                               19610121
      GO TO 36                                                       19610122
   47 GO TO 36                                                       19610123
   48 GO TO 36                                                       19610124
   50 GO TO 36                                                       19610125
   49 GO TO 36                                                       19610126
C     NOT RECOGNIZED PRINT AND CONTINUE - MESSAGE                    19610127
   34 CONTINUE                                                       19610128
      CALL ECPRT (6)                                                 19610129
      GO TO 36                                                       19610130
C     ROUGH ESTIMATE IF NONE AVAILABLE                               19610131
  241 CONTINUE                                                       19610132
      CALL FILLIN                                                    19610133
C     EQUILIBRIUM ESTIMATES WILL BE PREPARED IN MAINED BY EXPANSION  19610134
 7805 CONTINUE                                                       19610135
C       INDICATE EXTRAPOLATION FROM PREVIOUS CASE NOT WANTED         19610136
        CALL SAVES                                                   19610137
        SAVE(170)=0.0                                                19610138
      RETURN                                                         19610139
      END(1,0,0,1,0,0,0,0,0,1,0,0,0,0,0)
```

STORAGE NOT USED BY PROGRAM

DEC	OCT	DEC	OCT
272	00420	23481	55671

STORAGE LOCATIONS FOR VARIABLES APPEARING IN COMMON STATEMENTS

	DEC	OCT		DEC	OCT		DEC	OCT		DEC	OCT		DEC	OCT
A0	30742	74026	ACONDL	28972	70454	ACONDS	29197	71015	AL1	24818	60362	ALPHA	24820	60364
A	30697	73751	AVC	24793	60331	AVM	24794	60332	AZERO	30712	73770	B	24781	60315
CFROZE	32080	76520	CGAMMA	24784	60320	CHAL	26901	64425	CHGAM	24789	60325	CHLP	25093	61005
CHMOLS	24833	60411	CHP	27103	64737	CHSPHT	24790	60326	CHSP	25078	60766	CHT	26903	64427
CN	32099	76543	COMMON	32561	77461	COMPC	30973	74375	COMPH	30792	74110	COMPM	30842	74172
COMP	31723	75753	CRIA	32084	76524	CRTH	32086	76526	CRTMS	32085	76525	CRTM	32083	76523
CRTN	32082	76522	CRIP	32081	76521	CRTS	32087	76527	C	25993	62611	D1	24933	60545
DENSL	27139	65003	DENS	27187	65063	DH	24806	60346	DMAX	23586	56044	DP	24805	60345
D	25393	61461	DS	24804	60344	ECONDL	27367	65347	ECONDS	27547	65633	EGAMMA	24783	60317
EHZERO	27104	64740	EQAL	26697	64111	EGGAM	24787	60323	EGIMP1	24799	60337	EGIMP	24800	60340
EQLP	25063	61747	EQMOLS	24832	60400	EGP	26899	64423	EGSPHT	24786	60324	EGSP	25048	60730
EQT	26699	64113	E	26747	70113	ESZERO	27105	64741	EGAMMA	24782	60316	EHS	24808	60350
EHZERO	24829	60375	FORNWT	27140	65004	FP	24807	60347	FRAC	25193	61151	FHIMP1	24801	60341
FHIMP	24802	60342	FRSPHT	24786	60322	FRT	24831	60377	F	26093	62755	FSZERO	24828	60374
GAL1	24817	60361	GALPHA	24819	60363	GAM	24792	60330	GCHAL	26900	64424	GCHP	27003	64573
GCHT	26902	64426	GEQAL	26696	64110	GEQP	26799	64257	GEQT	26698	64112	GFRT	24830	60376
GP1	26193	63121	GPEXIT	27106	64742	GPI	27108	64744	GPPI	24795	60333	GPP	24797	60335
GP	26393	63431	GRATIO	24815	60357	GT1	24823	60367	GT	24825	60371	HCORR	27157	65025
H	25693	62443	HZERO1	24827	60373	HZERO	27142	65006	IDEN	31795	76063	ID	31783	76047
JCMMON	32561	77461	LABEL	32079	76517	LCOUNT	32103	76547	NA1	32123	76573	NAM1	32120	76570
NAME	31859	76163	NAMN1	32115	76563	NAMN2	32114	76562	NAMN3	32113	76561	NAMN4	32112	76560
NAMLES	32106	76552	NAMN	32124	76574	NAM	32127	76577	NAN1	32118	76566	NAN2	32117	76565
NAN3	32116	76564	NAN	32125	76575	NA	32130	76602	NCODE	32102	76551	NCOMP	30923	74313
NEST	32107	76553	NHS	23482	55672	NITER1	32106	76554	NITERA	32109	76555	NITER	32110	76556
NLISP	32104	76550	NM1	32122	76572	NMN1	32119	76567	NMN	32120	76576	NM	32129	76601
NN1	32121	76571	NN	32128	76600	NOMENL	31825	76171	NOMEN	32059	76473	NOMENS	31855	76157
NPROB	32111	76557	NREALT	30843	74173	N	32131	76603	P1	26293	63265	PERC	26495	63577
PEXIT	27107	64743	PFROZE	24785	60321	PI	27109	64745	PC	26494	63576	PPI	24796	60334
PP	24798	60336	P	26493	63575	Q1	25033	60711	Q	25693	62135	RATIO	24816	60360
RATIOS	31850	74212	R	32100	76544	S1	25293	61315	SAF	24791	60327	SAVE	26695	64107
SPIMP	24803	60343	S	25793	62301	SUMF1	24814	60356	SUMF2	24813	60355	SUMH	24812	60354
SUMS1	24811	60353	SUMS2	24810	60352	SUMS	24809	60351	SWITCH	23582	56036	SZERO	27141	65005
T1	24824	60370	TEMP1	32431	77257	TEMP2	32331	77113	TEMP3	32231	76747	TRANT	27172	65044
TRTEMP	24821	60362	T	24826	60372	TT	24822	60366	V0	30727	74007	V	25493	61625
WFL	30873	74231	W	25593	61771	WSYS1	31857	76161	WSYS2	31856	76160			

STORAGE LOCATIONS FOR VARIABLES NOT APPEARING IN COMMON, DIMENSION, OR EQUIVALENCE STATEMENT

	DEC	OCT		DEC	OCT		DEC	OCT		DEC	OCT		DEC	OCT
GC	271	00417	I1	270	00416	I	269	00415	K	268	00414	L	267	00413

LOCATIONS FOR OTHER SYMBOLS NOT APPEARING IN SOURCE PROGRAM

	DEC	OCT		DEC	OCT		DEC	OCT		DEC	OCT		DEC	OCT
2)	250	00372	3)	254	00376	6)	256	00400	C)G0	262	00406	C)G2	263	00407
C)G3	264	00410	C)G4	265	00411	C)G5	266	00412	D)211	240	00360	D)311	239	00357
D)403	44	00054	D)409	85	00125	E)4	65	00101	E)6	72	00110	E)8	82	00122
E)D	138	00212	E)F	154	00232	E)H	157	00235	E)K	180	00264	E)R	223	00337
E)T	226	00342	E)U	228	00344									

LOCATIONS OF NAMES IN TRANSFER VECTOR

	DEC	OCT		DEC	OCT		DEC	OCT		DEC	OCT		DEC	OCT
CARD	2	00002	EOFPRT	1	00001	ERLISO	7	00007	FILLIN	8	00010	LIQSOL	6	00006
LOG	4	00004	LXCHAR	5	00005	NAMEX	3	00003	NSERCH	0	00000	SAVES	9	00011

ENTRY POINTS TO SUBROUTINES NOT OUTPUT FROM LIBRARY

CARD EOFPRT ERLISO FILLIN LIQSOL LOG LXCHAR NAMEX NSERCH SAVES

EXTERNAL FORMULA NUMBERS WITH CORRESPONDING INTERNAL FORMULA NUMBERS AND OCTAL LOCATIONS

EFN	IFN	LOC	EFN	IFN	LOC	EFN	IFN	LOC	EFN	IFN	LOC	EFN	IFN	LOC
7820	29	00040	7801	32	00045	36	36	00055	63	39	00065	21	43	00102
20	45	00102	22	46	00111	23	47	00116	35	48	00123	3510	49	00126
7900	54	00147	3511	58	00161	7901	63	00200	33	67	00213	61	68	00220
41	69	00233	42	70	00234	43	71	00236	431	72	00240	432	77	00252
44	82	00262	441	83	00267	442	86	00274	45	89	00301	451	92	00314
46	94	00317	401	98	00334	47	100	00340	48	101	00341	50	102	00343
49	103	00345	34	104	00346	241	108	00353	7805	110	00361			

```
                                                                                  1961C203
                00007          ENTRY   CHARET

  TRANSFER VECTOR
00000  746263304434      (STHM)
00001  742631433460      (FIL)
00002  256731636760      EXITX
00003  745125633460      (RET)
00004  256731636060      EXIT

  LINKAGE DIRECTOR
00005  000000000000
00006  233021512563
                                                                                  1961C204
00007  0056 00  700000  CHARET RNT     700000                                     1961C205
00010  0020 00 0 00040         TRA     NOT7                                       1961C206
00011  0601 00 0 00041         STO     AC                                         1961C207
00012 -0600 00 0 00042         STQ     MQ                                         1961C208
00013  0604 00 0 00043         STI     IND                                        1961C209
00014 -0534 00 4 00043         LXD     IND,4                                      1961C210
00015  0634 00 4 00016         SXA     *+1,4                                      1961C211
00016  0522 00 0 00016         XEC     *                                          1961C212
00017  0636 00 4 00044         SCA     ADDR,4                                     1961C213
00020 -0500 00 0 00046         CAL     TAPE                                       1961C214
00021  0074 00 4 00000         TSX     $(STHM),4                                  1961C215
00022  0074 00 0 00047         TSX     FORMAT                                     1961C216
00023  0560 00 0 00041         LDQ     AC                                         1961C217
00024 -1 00000 0 00000         STR                                                1961C218
00025  0560 00 0 00042         LDQ     MQ                                         1961C219
00026 -1 00000 0 00000         STR                                                1961C220
00027  0560 00 0 00043         LDQ     IND                                        1961C221
00030 -1 00000 0 00000         STR                                                1961C222
00031  0560 00 0 00044         LDQ     ADDR                                       1961C223
00032 -1 00000 0 00000         STR                                                1961C224
00033  0074 00 4 00001         TSX     $(FIL),4                                   1961C225
00034  0500 00 0 00041         CLA     AC                                         1961C226
00035  0441 00 0 00045         LDI     ZERO                                       1961C227
00036  0600 60 0 00002         STZ*    $EXITX                                     1961C228
00037  0020 00 0 00003         TRA     $(RET)                                     1961C229
00040  0074 00 4 00004  NOT7   TSX     $EXIT,4                                    1961C230
00041  0 00000 0 00000  AC     PZE                                                1961C231
00042  0 00000 0 00000  MQ     PZE                                                1961C232
00043  0 00000 0 00000  IND    PZE                                                1961C233
00044  0 00000 0 00000  ADDR   PZE                                                1961C234
00045  0 00000 0 00000  ZERO   PZE                                                1961C235
00046  0 00006 0 00000  TAPE   PZE     ,,6                                        1961C236
00047  740430602123    FORMAT BCI     8,(4H AC G20.8,4H MQ G20.8,5H IND O12,6H ADDR O12)
00050  602702003310
00051  730430604450
00052  602702003310
00053  730530603145
00054  246046010273
00055  063060212424
00056  516046010234                                                              1961C237
                       END
```

POST PROCESSOR ASSEMBLY DATA

57 IS THE FIRST LOCATION NOT USED BY THIS PROGRAM

REFERENCES TO DEFINED SYMBOLS

41	AC	11,	23,	34
42	MQ	12,	25	
43	IND	13,	14,	27
44	ADDR	17,	31	
4	EXIT	40		
40	NOT7	10		
46	TAPE	20		
45	ZERO	35		
2	EXITx	36		
1	(FIL)	33		
3	(RET)	37		
7	CHARET			
47	FORMAT	22		
0	(STHM)	21		

NO ERROR IN ABOVE ASSEMBLY.

```
*     CARDS COLUMN                                                      1961B501
      FORTRAN                                                           1961B502
      08                                                                1961B503
      SUBROUTINE MAINCH                                                 1961B504
      DIMENSION DUM123(5452), DUM345(2282)                              1961B505
      COMMON DUM123, PI, DUM345, T                                      1961B506
      WRITE OUTPUT TAPE 6, 1, PI, T                                     1961B507
    1 FORMAT(1H1,20X,24HERROR ENTRY TO (8)  P = E14.5,5X,4HT = E14.5)   1961B508
      RETURN                                                            1961B509
      END                                                               1961B510
*     CARDS COLUMN                                                      1961B511
*     FORTRAN                                                           1961B512
C     09                                                                1961B513
      SUBROUTINE MAINEQ                                                 1961B514
      DIMENSION DUM123(5452), DUM345(2282)                              1961B515
      COMMON DUM123, PI, DUM345, T                                      1961B516
      WRITE OUTPUT TAPE 6, 1, PI, T                                     1961B517
    1 FORMAT(1H1,20X,24HERROR ENTRY TO (9)  P = E14.5,5X,4HT = E14.5)   1961B518
      RETURN                                                            1961B519
      END                                                               1961B520
*     CARDS COLUMN                                                      1961B521
*     FORTRAN                                                           1961B522
C     28                                                                1961B523
      SUBROUTINE GAMMA                                                  1961B524
      DIMENSION DUM123(5452), DUM345(2282)                              1961B525
      COMMON DUM123, PI, DUM345, T                                      1961B526
      WRITE OUTPUT TAPE 6, 1, PI, T                                     1961B527
    1 FORMAT(1H1,20X,24HERROR ENTRY TO (28) P = E14.5,5X,4HT = E14.5)   1961B528
      RETURN                                                            1961B529
      END                                                               1961B530
*     CARDS COLUMN                                                      1961B531
*     FORTRAN                                                           1961B532
C     35                                                                1961B533
      SUBROUTINE DESIGN                                                 1961B534
      DIMENSION DUM123(5452), DUM345(2282)                              1961B535
      COMMON DUM123, PI, DUM345, T                                      1961B536
      WRITE OUTPUT TAPE 6, 1, PI, T                                     1961B537
    1 FORMAT(1H1,20X,24HERROR ENTRY TO (35) P = E14.5,5X,4HT = E14.5)   1961B538
      RETURN                                                            1961B539
      END                                                               1961B540
*     CARDS COLUMN                                                      1961B541
*     FORTRAN                                                           1961B542
C     38                                                                1961B543
      SUBROUTINE NOZZLE                                                 1961B544
      DIMENSION DUM123(5452), DUM345(2282)                              1961B545
      COMMON DUM123, PI, DUM345, T                                      1961B546
      WRITE OUTPUT TAPE 6, 1, PI, T                                     1961B547
    1 FORMAT(1H1,20X,24HERROR ENTRY TO (38) P = E14.5,5X,4HT = E14.5)   1961B548
      RETURN                                                            1961B549
      END                                                               1961B550
*     FORTRAN                                                           1961B551
*     CARDS COLUMN                                                      1961B552
C     39                                                                1961B553
      SUBROUTINE CSTAR                                                  1961B554
      DIMENSION DUM123(5452), DUM345(2282)                              1961B555
```

```
      COMMON DUM123, PI, DUM345, T                                      1961B556
      WRITE OUTPUT TAPE 6, 1, PI, T                                     1961B557
    1 FORMAT(1H1,20X,24HERROR ENTRY TO (39) P = E14.5,5X,4HT = E14.5)   1961B558
      RETURN                                                            1961B559
      END                                                               1961B560
*     CARDS COLUMN                                                      1961B561
*     FORTRAN                                                           1961B562
C     40                                                                1961B563
      SUBROUTINE MAINFR                                                 1961B564
      DIMENSION DUM123(5452), DUM345(2282)                              1961B565
      COMMON DUM123, PI, DUM345, T                                      1961B566
      WRITE OUTPUT TAPE 6, 1, PI, T                                     1961B567
    1 FORMAT(1H1,20X,24HERROR ENTRY TO (40) P = E14.5,5X,4HT = E14.5)   1961B568
      RETURN                                                            1961B569
      END                                                               1961B570
*     CARDS COLUMN                                                      1961B571
*     FORTRAN                                                           1961B572
C     41                                                                1961B573
      SUBROUTINE ZENTRO                                                 1961B574
      DIMENSION DUM123(5452), DUM345(2282)                              1961B575
      COMMON DUM123, PI, DUM345, T                                      1961B576
      WRITE OUTPUT TAPE 6, 1, PI, T                                     1961B577
    1 FORMAT(1H1,20X,24HERROR ENTRY TO (41) P = E14.5,5X,4HT = E14.5)   1961B578
      RETURN                                                            1961B579
      END                                                               1961B580
*     CARDS COLUMN                                                      1961B581
*     FORTRAN                                                           1961B582
C     46                                                                1961B583
      SUBROUTINE TRMATX                                                 1961B584
      RETURN                                                            1961B585
       END                                                              1961B586
*     CARDS COLUMN                                                      1961B587
*     FORTRAN                                                           1961B588
C     47                                                                1961B589
      SUBROUTINE TRPRSX                                                 1961B590
      RETURN                                                            1961B591
       END                                                              1961B592
*     CARDS COLUMN                                                      1961B593
*     FORTRAN                                                           1961B594
C     49                                                                1961B595
      SUBROUTINE TRVARX                                                 1961B596
      RETURN                                                            1961B597
       END                                                              1961B598
*     CARDS COLUMN                                                      1961B599
*     FORTRAN                                                           1961B600
C     51                                                                1961B601
      SUBROUTINE TRLOGX                                                 1961B602
      RETURN                                                            1961B603
       END                                                              1961B604
*     CARDS COLUMN                                                      1961B605
*     FORTRAN                                                           1961B606
C     52                                                                1961B607
      SUBROUTINE TRINPX                                                 1961B608
      RETURN                                                            1961B609
       END                                                              1961B610
```

```
*       CARDS COLUMN                                                    1961B611
*       FORTRAN                                                         1961B612
        59                                                              1961B613
        SUBROUTINE SHAPE                                                1961B614
        DIMENSION DUM123(5452), DUM345(2282)                            1961B615
        COMMON DUM123, PI, DUM345, T                                    1961B616
        WRITE OUTPUT TAPE 6, 1, PI, T                                   1961B617
      1 FORMAT(1H1,20X,24HERROR ENTRY TO (59) P = E14.5,5X,4HT = E14.5) 1961B618
        RETURN                                                          1961B619
        END                                                             1961B620
*       CARDS COLUMN                                                    1961B621
*       FORTRAN                                                         1961B622
C       59B                                                             1961B623
        SUBROUTINE JCHECK                                               1961B624
        DIMENSION DUM123(5452), DUM345(2282)                            1961B625
        COMMON DUM123, PI, DUM345, T                                    1961B626
        WRITE OUTPUT TAPE 6, 1, PI, T                                   1961B627
      1 FORMAT(1H1,20X,24HERROR ENTRY TO (59A)P = E14.5,5X,4HT = E14.5) 1961B628
        RETURN                                                          1961B629
         END                                                            1961B630
*       CARDS COLUMN                                                    1961B631
*       FORTRAN                                                         1961B632
C       73                                                              1961B633
        FUNCTION SHIFCP(T)                                              1961B634
        DIMENSION DUM123(5452), DUM345(2282)                            1961B635
        COMMON DUM123, PI, DUM345, T                                    1961B636
        WRITE OUTPUT TAPE 6, 1, PI, T                                   1961B637
      1 FORMAT(1H1,20X,24HERROR ENTRY TO (73) P = E14.5,5X,4HT = E14.5) 1961B638
        RETURN                                                          1961B639
        END                                                             1961B640
*       CARDS COLUMN                                                    1961B641
*       FORTRAN                                                         1961B642
C       88                                                              1961B643
        SUBROUTINE EXTRA1                                               1961B644
        DIMENSION DUM123(5452), DUM345(2282)                            1961B645
        COMMON DUM123, PI, DUM345, T                                    1961B646
        WRITE OUTPUT TAPE 6, 1, PI, T                                   1961B647
      1 FORMAT(1H1,20X,24HERROR ENTRY TO (88) P = E14.5,5X,4HT = E14.5) 1961B648
        RETURN                                                          1961B649
        END                                                             1961B650
*       CARDS COLUMN                                                    1961B651
*       FORTRAN                                                         1961B652
C       89                                                              1961B653
        SUBROUTINE EXTRA2                                               1961B654
        DIMENSION DUM123(5452), DUM345(2282)                            1961B655
        COMMON DUM123, PI, DUM345, T                                    1961B656
        WRITE OUTPUT TAPE 6, 1, PI, T                                   1961B657
      1 FORMAT(1H1,20X,24HERROR ENTRY TO (89) P = E14.5,5X,4HT = E14.5) 1961B658
        RETURN                                                          1961B659
        END                                                             1961B660
*       CARDS COLUMN                                                    1961B661
*       FORTRAN                                                         1961B662
C       95                                                              1961B663
        SUBROUTINE SUMARY                                               1961B664
        DIMENSION DUM123(5452), DUM345(2282)                            1961B665
```

```
      COMMON DUM123, PI, DUM345, T                                      1961B666
      WRITE OUTPUT TAPE 6, 1, PI, T                                     1961B667
    1 FORMAT(1H1,20X,24HERROR ENTRY TO (95) P = E14.5,5X,4HT = E14.5)   1961B668
      RETURN                                                            1961B669
      END                                                               1961B670
*     CARDS COLUMN                                                      1961B671
*     FORTRAN                                                           1961B672
C     96                                                                1961B673
      SUBROUTINE AREA                                                   1961B674
      DIMENSION DUM123(5452), DUM345(2282)                              1961B675
      COMMON DUM123, PI, DUM345, T                                      1961B676
      WRITE OUTPUT TAPE 6, 1, PI, T                                     1961B677
    1 FORMAT(1H1,20X,24HERROR ENTRY TO (96) P = E14.5,5X,4HT = E14.5)   1961B678
      RETURN                                                            1961B679
       END                                                              1961B680
*     CARDS COLUMN                                                      1961B681
*     FORTRAN                                                           1961B682
C     97                                                                1961B683
      SUBROUTINE SPEED                                                  1961B684
      DIMENSION DUM123(5452), DUM345(2282)                              1961B685
      COMMON DUM123, PI, DUM345, T                                      1961B686
      WRITE OUTPUT TAPE 6, 1, PI, T                                     1961B687
    1 FORMAT(1H1,20X,24HERROR ENTRY TO (97) P = E14.5,5X,4HT = E14.5)   1961B688
      RETURN                                                            1961B689
       END                                                              1961B690
```

APPENDIX C

Input Data Forms

KEY PUNCH: Omit blank cards in sets 1-B & 1-C.
Punch all non-blank cards printed on form.

SET #1-A
Title

1	50
BINARY ▲▲0▲▲▲1-25-61▲▲▲▲JANAF▲MASTER	

Master Data Tape

SET #1-B
Elemental Chemical Composition

1	13
COMPOSITION	▲
FUEL	
OXIDIZER	
N	
Ø	
BINDER	
Z	
LAST	▲
LAST	▲

Sum must = 100.0

SET #1-C
Estimated Species Products

▲-Gaseous
S-Solid
L-Liquid

1-Element
2-Gaseous
3-Cond.

1	11	12	14 28
ESTIMATES	▲	▲	▲
CHAMBER	▲	▲	▲
ALPHA	▲	▲	
LAST	▲	▲	▲
EXECUTE	▲	▲	▲

Notes:

1. Composition is given in number of atoms.
2. Alpha = $P_{gas} / \Sigma N_{i_{gas}}$
3. Estimates are given in MØLS or in MØLS/MØL.
4. Alphabetical "O" must be written "Ø"
5. Estimates using exponential format must end in column 28.
6. Secondary stream fuel, if present, must be entered into "Set 1-B BINDER".

CALC			REVISED	DATE	AIR AUGMENTED ROCKET INPUT DATA SHEET #1	AS 1961
CHECK						7-23-63
APR					BOEING AIRPLANE COMPANY	PAGE 98
APR						

U3 4038 8000 (WAS BAC 1017 R5)

2-7000

KEY-PUNCH

1) * DO NOT PUNCH THIS LINE

2) BLANK CARD SETS SHOULD BE OMITTED

CARD SET #5	CARD SET *4								CARD SET #5								CARD SET *6					
N SET	P_∞	T_∞	A_∞	V_∞	M_∞	P_s°	T_s°	H_s°	P_s	A_s	$\dot{m}_s$	M_s	a	b	MW	ΔV	P_e	A_e	$\frac{A_e}{A_s}$	ΔP	I_{SR}	CASE TITLE
* Col 1 2	Col 1	Col 11	Col 21	Col 31	Col 41	Col 51	Col 61	Col 71	Col 1	Col 11	Col 21	Col 31	Col 41	Col 51	Col 61	Col 71	Col 1	Col 11	Col 21	Col 31	Col 41	Col 1

* NOTE: FOR CARD SET #1 SEE INPUT DATA SHEET #2 OR USE SAME CHEMICAL COMPOSITION AS USED IN CASE ____ ____.

* CARD SET #2	TGESS	VGESS	VLIMIT	GAMA	AMODE	Y	
*	Col 1	Col 11	Col 21	Col 31	Col 41	Col 51	Col 61

* CARD SET #3	P_p	H_p°	A_p	$\dot{m}_p$	V_p	H_{sp}°	$\dot{m}_{sp}$
*	Col 1	Col 11	Col 21	Col 31	Col 41	Col 51	Col 61

AS-1961

DATA INPUT SHEET #2