RESEARCH ON BEARING LUBRICANTS FOR USE IN HIGH VACUUM

N64-27310

code1 cat. 17

NASA-CR-58039

ANNUAL SUMMARY REPORT
23 April 1963 - 22 May 1964

Contract No. NAS8-1540
Control No. TP 85-137

MRI Project No. 2492-E

OTS PRICE

XEROX $ 4.60 ph

MICROFILM $

For

National Aeronautics and Space Administration
Marshall Space Flight Center
Huntsville, Alabama
Attn: Office of Procurement and Contracts, PR-RDC

MRI

MIDWEST RESEARCH INSTITUTE

MIDWEST RESEARCH INSTITUTE

RESEARCH ON BEARING LUBRICANTS FOR USE IN HIGH VACUUM

by

Vern Hopkins
D. H. Gaddis
R. D. Hubbell
F. W. Holm

ANNUAL SUMMARY REPORT
23 April 1963 - 22 May 1964

Contract No. NAS8-1540
Control No. TP 85-137

MRI Project No. 2492-E

For

National Aeronautics and Space Administration
Marshall Space Flight Center
Huntsville, Alabama
Attn: Office of Procurement and Contracts, PR-RDC

PREFACE

This report describes the activities on a program, "Research on Bearing Lubricants for Use in High Vacuum," between 23 April 1963 and 22 May 1964. The program is under Contract No. NAS8-1540, Control No. TP 85-137, and MRI Project No. 2492-E. It is administered by the Engineering Physics Branch of the Materials Division of the Propulsion and Vehicle Engineering Laboratory of the George C. Marshall Space Flight Center; Mr. Keith E. Demorest is the technical representative of the NASA contracting office.

Mr. Donald H. Gaddis, Project Leader, is responsible for the over-all project activities. Mr. Ron Hubbell contributed in the areas of film formulation, lubricant binder evaluation and equipment design and modification. Mr. William Holm has concentrated his activities on the design, assembly and check-out of the ultra-high vacuum apparatus. Mr. Frank Barker and Mr. Clayton Craghead have contributed instrumentation design. Mr. Burl Kinder and Mr. Robert Schaefer performed all of the laboratory and testing work. Mr. Vern Hopkins has furnished guidance to the over-all program.

Approved for:

MIDWEST RESEARCH INSTITUTE

Harold L. Stout

Harold L. Stout, Director
Engineering Division

5 May 1964

kk

TABLE OF CONTENTS

	Page No.
Abstract	1
Summary	2
I. Introduction	4
II. Binder Development Studies	5
A. Requirements for Solid Lubricant Binders	5
B. Selection of Materials and Binder Formulation	6
C. Method of Evaluating Formulated Binders	7
D. Results of Binder Evaluation	8
III. Film Formulation, and Investigation of Frictional Behavior	9
IV. Wear-Life Investigation	13
V. Special Solid Lubricant Film Application Activities	19
VI. Ultra-High Vacuum Apparatus	22
VII. Multistation Vacuum Friction and Wear Apparatus Preliminary Design	25
VIII. Future Work	28
Bibliography	30
Appendix - Tables I - IX	31

TABLE OF CONTENTS (Concluded)

List of Figures

Fig. No.	Title	Page No.
1	Friction Coefficient Extremes For Five Screening Runs in Air With MLF-5	10
2	Vacuum Friction Apparatus	11
3	Three Pellet and Wear Plate Sliding Configuration	12
4	Wear-Life Tester and Control Unit	15
5	Cut-Away View of Wear-Life Tester	16
6	Wear-Life Testers With Control Units	18
7	High Load Sliding Configuration Used at MSFC	20
8	Friction Results From High Load Tests at MSFC	21
9	Ultra-High Vacuum Apparatus	23
10	One-Piece Glass Assembly - Ultra-High Vacuum System	24
11	Multistation Vacuum Friction and Wear Apparatus	27

List of Tables

Table No.	Title	Page No.
I	Friction and Wear-Life Results From Kasil 88 Binder Screening Runs	32
II	Friction Results From MLF-5 Screening Runs	35
III	Friction Results From Screening Runs	36
IV	Friction Results From Frictional Behavior Runs	39
V	Wear-Life Investigation Results for MLF-5	40
VI	Wear-Life Investigation Results for Modified MLF-5	41
VII	Solid Lubricant Coated Items	42
VIII	Friction Results for Lubricant Films After RP-1 Contamination	43
IX	Multistation Vacuum System Requirements	44

ABSTRACT

27310

The wear-life of a potassium silicate binder material was increased by the addition of sodium fluoride. A solid lubricant film composed of MoS_2, graphite, gold and potassium silicate modified with sodium fluoride exhibited friction characteristics similar to those of MLF-5 and longer wear-life (in air) than that of MLF-5. A description of six newly designed and fabricated wear-life testers is presented. MLF-5 exhibited friction coefficients as low as 0.04 at room temperature, in air and at loads to 150,000 psi. An ultra-high vacuum apparatus was built and attained an ultimate pressure of 1.6×10^{-13} Torr. The preliminary design of a multi-station vacuum friction apparatus is presented and discussed.

Author

SUMMARY

A program is being conducted for the NASA Marshall Space Flight Center (MSFC) to investigate and evaluate inorganic solid lubricant films suitable for use in air and outer space environments. In this program solid lubricant films are being evaluated at ambient pressures from normal atmospheric to 10^{-7} Torr and temperatures from 80°F to 400°F while under light loads (in the range of 2 - 14 psi projected area).

Because the binder in a bonded-type solid lubricant film is as important as the lubricant, much effort was spent on the development and evaluation of binder materials. Potassium silicate (Kasil 88) was selected as the basic binder material and modified by the addition of potassium phosphate (K_3PO_4) and sodium fluoride (NaF). The addition of sodium fluoride to the potassium silicate binder material was found to increase the wear-life of the binder as much as 35 times in a nitrogen atmosphere. A modified binder material consisting of 60 per cent Kasil 88 and 40 per cent NaF was incorporated into a composite lubricant film and evaluated.

Many films were formulated using such lubricant materials as MoS_2, $MoSe_2$, WS_2, WSe_2, Au, Bi, Bi_2Te_3, and graphite and such binder materials as sodium silicate and potassium silicate. The results of screening runs performed in an air atmosphere show that the friction characteristics of a film composed of MoS_2 + graphite + gold/Kasil 88 + NaF are similar to the MLF-5 film. $MoSe_2$, WS_2, and WSe_2 were investigated individually and as replacements for MoS_2 in the MLF-5 film formulation. The results of screening runs indicate that these films do not warrant further investigation and that none of these lubricant materials exhibits lower friction characteristics than MoS_2 in the MLF-5 formulation. However, these materials should be considered and evaluated in other films and as additives to MLF-5.

Six wear-life testers were designed and fabricated to investigate the wear-life of solid lubricant films at room temperature and in an air or an inert atmosphere. The results of wear-life runs using the new testers show that a film consisting of MoS_2 + graphite + gold/Kasil 88 + NaF exhibited longer wear-life in an air atmosphere than MLF-5.

The MLF-5 solid lubricant film was applied to many bearings and test specimens for MSFC and other concerns. Data for high load tests (up to 150,000 psi) performed on MLF-5 at MSFC indicated that the coefficient of friction ranged from 0.04 to 0.14 and decreased with increased loads.

An ultra-high vacuum apparatus was designed and assembled to investigate the frictional behavior and wear characteristics of solid lubricant films at pressures below 10^{-10} Torr. The vacuum system essentially consists of a one-liter test chamber, two cryogenic cold traps, two mercury-vapor diffusion pumps and a mechanical forepump. Operation of the vacuum system was checked out and an ultimate pressure of 1.6×10^{-13} Torr (indicated by a Redhead type gauge) was attained.

The preliminary design of a multistation vacuum apparatus is presented and discussed. This apparatus can be used to evaluate the friction and wear characteristics of solid lubricant films applied to a variety of machine elements over a broad range of loads, speeds and temperatures.

I. INTRODUCTION

A program is being conducted for the NASA Marshall Space Flight Center (MSFC) to develop bonded inorganic solid lubricant films suitable for use in air and outer space environments. In this program, solid lubricant films are being investigated at ambient pressures from normal atmospheric to 10^{-7} Torr and temperatures from 80°F to 400°F while under light loads (in the range of 2 - 14 psi).

During the first year (February 1961 - March 1962) of the program,[1] an apparatus was designed and built to investigate the frictional behavior of solid lubricant films over the required range of environmental conditions. A great number of materials were considered for use as potential lubricants or lubricant film components, among them noble metals, low melting point metals, precious stones, molybdenum disulfide and other inorganic compounds. A large number of these materials were selected, formulated into composite films, and investigated along with many known solid lubricant films. Friction and wear characteristics of the films investigated were compared with those of a film of electroplated gold. This comparison in turn made possible the judging of the relative performance of the films. Five of the solid lubricant films which were investigated exhibited better performance than electroplated gold film. One of these films was selected by NASA for use in particular applications and was designated MLF-5.

During the second year (March 1962 - April 1963) of this program,[2] increased emphasis was placed on binder development studies because of the importance of a binder in a bonded-type solid lubricant film. Potassium silicate (Kasil 88) was selected as a base binder material because it adhered better to 440 C stainless steel than sodium silicate, and it also was more resistant to degradation from water. The basic binder material was then modified by the addition of sodium phosphate (Na_3PO_4), potassium phosphate (K_3PO_4), sodium borate ($Na_2B_4O_7$), and sodium fluoride (NaF) in varying amounts. The most successful method of evaluating binder performance was found to be a wear-life test consisting of sliding three binder-coated pellets over a wear track plate in a nitrogen-rich atmosphere.

Additional potential lubricant materials were obtained through a rescreening of the IBM printout obtained from the first year's work and through monitoring the efforts of other researchers conducting solid lubricant research. Materials which exhibited friction coefficients less than 0.22 were selected for incorporation into composite lubricant films for further screening. These included, $MoSe_2$, WS_2, WSe_2, Bi_2Te_3, $AuTe_3$, AgCl, $AgBrO_3$ and Bi.

A wear-life tester was designed and built to investigate lubricant wear-life on pellets at room temperature and in an air atmosphere. Early data indicated that the longest wear-life could be obtained from bonded inorganic solid lubricant film when the film was mated with a smooth surface. The end of the second year's efforts was marked by MLF-5 being chosen as the basis of judging the performance of other developed solid lubricant films.

The current year's program (April 1963 - May 1964) included additional binder development studies. The results of binder screening runs using potassium silicate modified with K_3PO_4 and NaF are presented. Results are also presented from screening runs performed on solid lubricant films composed of many potential lubricant materials. One lubricant film (MoS_2, graphite, Au/Kasil 88 + NaF) which exhibited friction characteristics very similar to MLF-5 was selected for wear-life evaluation in air. The results of the wear-life runs using this film and MLF-5 are presented along with a description of the wear-life testers. An ultra-high vacuum apparatus designed and built to investigate the performance of solid lubricant films at pressures below 10^{-10} Torr is described. The proposed design of a multistation vacuum apparatus to evaluate solid lubricant films applied to a variety of machine elements is presented.

II. BINDER DEVELOPMENT STUDIES

A. Requirements for Solid Lubricant Binders

In the formulation of a bonded-type inorganic solid lubricant film, the binder is as important as the lubricant. The function of a binder is to bind the lubricant to the surface to be lubricated. A binder usually forms a matrix type structure and as such holds the lubricant in many tiny reservoirs. If the binder is easily fractured or abraded, then a composite lubricant film will wear rapidly and the full benefit of the lubricant will not be realized.

The over-all objectives of the binder development studies are to develop binders that are:

1. Wear-resistant,

2. Compatible with selected lubricants,

3. Highly resistant to damage from water, rocket fuels, oxidizers and the earth's atmosphere,

4. Capable of bonding tightly to the substrate surface, and

5. Able to cure at a moderate temperature.

When binder curing temperatures are too high, the mechanical properties of the substrates are significantly reduced or impaired.

The lubricant binder systems being developed must withstand the environment of 70° to 400°F in an air atmosphere and at ambient pressures to 10^{-6} Torr or less. They must also remain stable over the range of temperature and humidity existing in the earth's atmosphere. To meet these requirements, various modified glazes have been formulated. The problem of formulation was similar to preparing porcelain enamel for metals, or glazes for ceramic surfaces. However, the binder materials for lubricant films must cure at temperatures much lower than those required for enamels or glazes.

B. Selection of Materials and Binder Formulation

Present binder materials under consideration are based on the amorphous or glassy character of certain silicates, borates and phosphates. The amorphous nature of these materials results from the formation of long polymeric chains of the central atom with oxygen, which gives good adhesion to substrate materials while forming thin continuous films.

In a review of the literature on solid lubricant films, the use of sodium silicate as a binder was frequently encountered but little mention of potassium silicate was found. Both potassium silicate and sodium silicate have similar characteristics; however, sodium silicate tends to frost or effloresce when exposed to moist air. Dried films of potassium silicate have a much less tendency to effloresce on exposure to moist air, therefore, potassium silicate was selected for investigation as a solid lubricant binder.

The addition of alkali earth metal or of alkaline earth metal to a potassium silicate has improved the adherence of the silicate to glass substrates and may also improve its adherence to metal substrates as well as increase the flexibility of a cured film. An increase in binder flexibility reduces the tendency of a binder to crack when it is stressed. Either improvement is expected to enhance the properties of a potassium silicate as a solid lubricant binder.

Initially three potassium silicates were investigated for use as the basic binder material. These three potassium silicates have the following $K_2O:SiO_2$ ratios: Kasil No. 1, 1:2.5; Kasil No. 88, 1:2.2; and Kasil No. 6, 1:2.1. Kasil No. 88 was selected as the most suitable potassium silicate to modify with various selected additives.

Binders were formulated by adding sodium phosphate, potassium phosphate, sodium borate and sodium fluoride - one at a time - in varying amounts to Kasil 88. The silicate solutions were then diluted approximately 3:1 with water to form a solution of 10 to 15 per cent solids. Next they were sprayed on to 440 C stainless steel and cured. After curing, the modified silicates were evaluated.

C. Method of Evaluating Formulated Binders

Binder materials were evaluated by determining their friction and wear characteristics. These characteristics were then compared with those of the binder material used in the MLF-5 solid lubricant film (sodium silicate, type K). The friction and wear-life tests of a binder material were made by sliding three coated pellets over the surface of a flat wear track plate made of 440 C stainless steel. The three pellets were rigidly held in a pellet holder and coated with binder material to a thickness of approximately 0.001 in. The cured binder electrically insulates the ends of the pellets. The loss of electrical contact resistance between the pellets and the plate was used to detect binder film failure. Binder evaluation runs were conducted under the following operating conditions:

Load - 50 gm/contact (2.2 psi, projected area)

Speed - 900 rpm (765 fpm)

Temperature - 80° to 90°F

Environmental Atmosphere - nitrogen (at atmospheric pressure)

Wear Track Roughness - 4 - 6 rms

Wear Track Hardness - 55 - 59 Rockwell C

The coefficient of friction between binder material and wear track plate was recorded continuously. Wear-life was considered to be the time required for the binder material to wear away and allow metal-to-metal contact between any one of the pellets and the wear-track plate. Metal-to-metal contact was signaled by the loss of electrical contact resistance across the binder film.

D. Results of Binder Evaluation

Between March 1962 and April 1963 sodium phosphate (Na_3PO_5), potassium phosphate (K_3PO_4), sodium fluoride (NaF), and sodium borate ($Na_2B_4O_7$) were evaluated for use as additives to potassium silicate (Kasil 88).[2] This evaluation was performed on the vacuum friction apparatus in an air atmosphere. Later on the evaluation was performed in a nitrogen atmosphere. The result of this work showed that:

1. Longer binder wear-lives were obtained in a nitrogen atmosphere (rather than air);

2. Data scatter was generally less for runs made in the nitrogen atmosphere; and

3. The most promising binder found was composed of 90 per cent Kasil 88 and 10 per cent Na_3PO_4.

During this report period (April 1963 to May 1964) more runs were conducted in the nitrogen atmosphere with Kasil 88 modified with K_3PO_4 and NaF. The results of these runs are presented in Table I (in the Appendix). Of all the potassium silicate additives investigated during the past two years (Na_3PO_4, K_3PO_4, NaF, and $Na_2B_4O_7$) NaF was found to be the most effective.

The wear-life of sodium silicate (type K) was found to be approximately 2 min/0.0001 in of binder film thickness. The wear-life of Kasil 88 was found to be approximately 3 min/0.0001 in. The wear-life of Kasil 88 modified with NaF (60 per cent Kasil 88 and 40 per cent NaF) was found to be as long as 104 min/0.0001 in. On this basis of comparison, the Kasil 88 + NaF binder exhibited a wear-life 35 times longer than Kasil 88 and 52 times longer than sodium silicate. No significant interpretation could be made for the observed friction characteristics of the binders.

The results of the runs presented in Table I (in Appendix) indicate that the optimum concentration of NaF is somewhere between 35 and 55 per cent. The data also show that the exact concentration of NaF is not critical; long binder wear-lives (greater than 40 min/0.0001 in. of binder thickness) were obtained over a wide range of concentration. When long binder wear-life was encountered only one run per day could be made. In many cases runs were terminated before the binder wore through to the substrate, because we were looking for the point at which the NaF no longer prolonged wear-life. On the basis of the data presented in Table I, an inspection of the binder after each run, and observations made during these runs, it appeared that a drop in wear-life was encountered at a concentration of approximately 55 per cent.

The optimum concentration of NaF could be determined by conducting many additional runs, but we believe that it is not warranted because of the uncertainty of wear-life carry-over to formulated solid lubricant films. Since long wear-life was obtained with several Kasil 88 and NaF binder formulations the binder development studies were halted and the evaluation of these binders in solid lubricant film formulations was started.

The binder formulation of 60 per cent Kasil 88 and 40 per cent NaF was selected for incorporating into solid lubricant films for further investigation. The selection of this binder formulation over others were based primarily on observations made during the binder evaluation runs. This binder was substituted for sodium silicate in the MLF-5 solid lubricant film formulation, and friction and wear characteristics were determined for the resulting film. The results of this evaluation are discussed in Sections III and IV.

III. FILM FORMULATION, AND INVESTIGATION OF FRICTIONAL BEHAVIOR

The objectives of the work discussed in this section are to formulate new films, perform screening runs to determine frictional characteristics over the temperature range of 80° to 400°F and, when warranted, investigate more thoroughly the film's frictional behavior in air and vacuum at 80°, 250° and 400°F. It was established at the beginning of this year's program, that the selection of potential lubricants and subsequent judgment of their performance will depend on a comparison of their frictional and wear characteristics to those of MLF-5 solid lubricant film. To give a quantitative value to the friction characteristics of MLF-5, five screening runs were conducted on the vacuum friction apparatus with the MLF-5 film. The screening runs were made at a load of 50 fm/contact, 900 rpm and over a wear track temperature range of 80° to 400°F. The wear track temperature was maintained at 80°F during the first 30 min. then increased to 400°F at 5°F/min during the next 60 min. and finally held at 400°F for the last 30 min. The results of these MLF-5 screening runs are presented in Table II (in the Appendix). The high and low observed friction coefficients from Table II have been plotted and are presented in Fig. 1.

Screening runs were performed on the vacuum friction apparatus shown in Fig. 2. In this apparatus a three-pellet and wear track plate specimen configuration (see Fig. 3) was used. Only the ends of the 1/4 in. diameter x 1/4 in. long stainless steel pellets were coated. The pellets were rigidly mounted in a pellet holder. Measurements of the torque required to slide the coated pellets over the 440 C stainless steel wear plate were taken while the temperature was increased from ambient to 400°F at the rate of 10°F/min. The frictional torque was picked up from a transducer and the signal sent through an amplifier to a strip chart recorder. The recorder then provided a frictional torque curve for each screening run. From each curve the high and low friction coefficients were recorded after run-in.

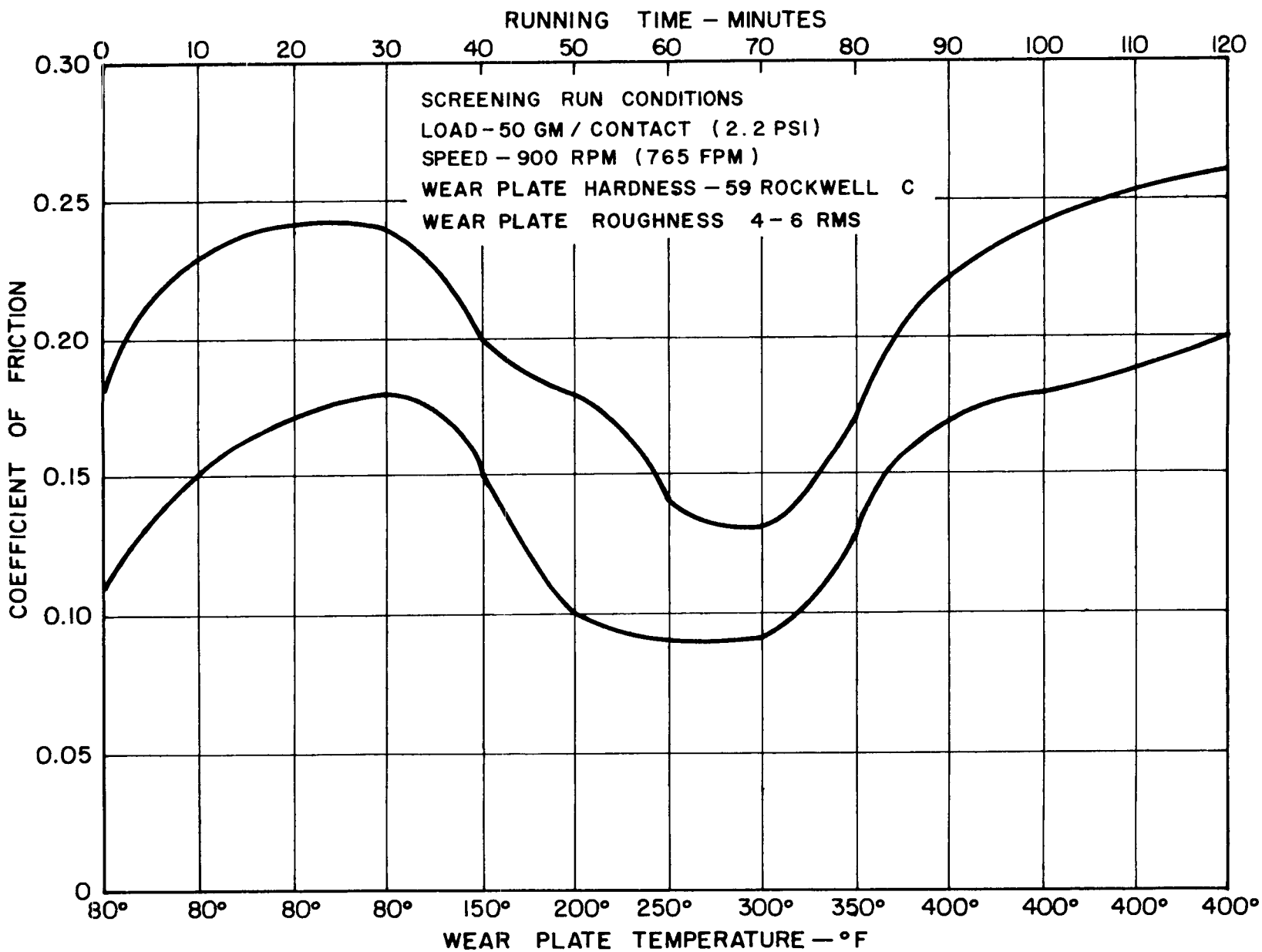

Fig. 1 - Friction Coefficient Extremes For Five Screening Runs in Air With MLF-5

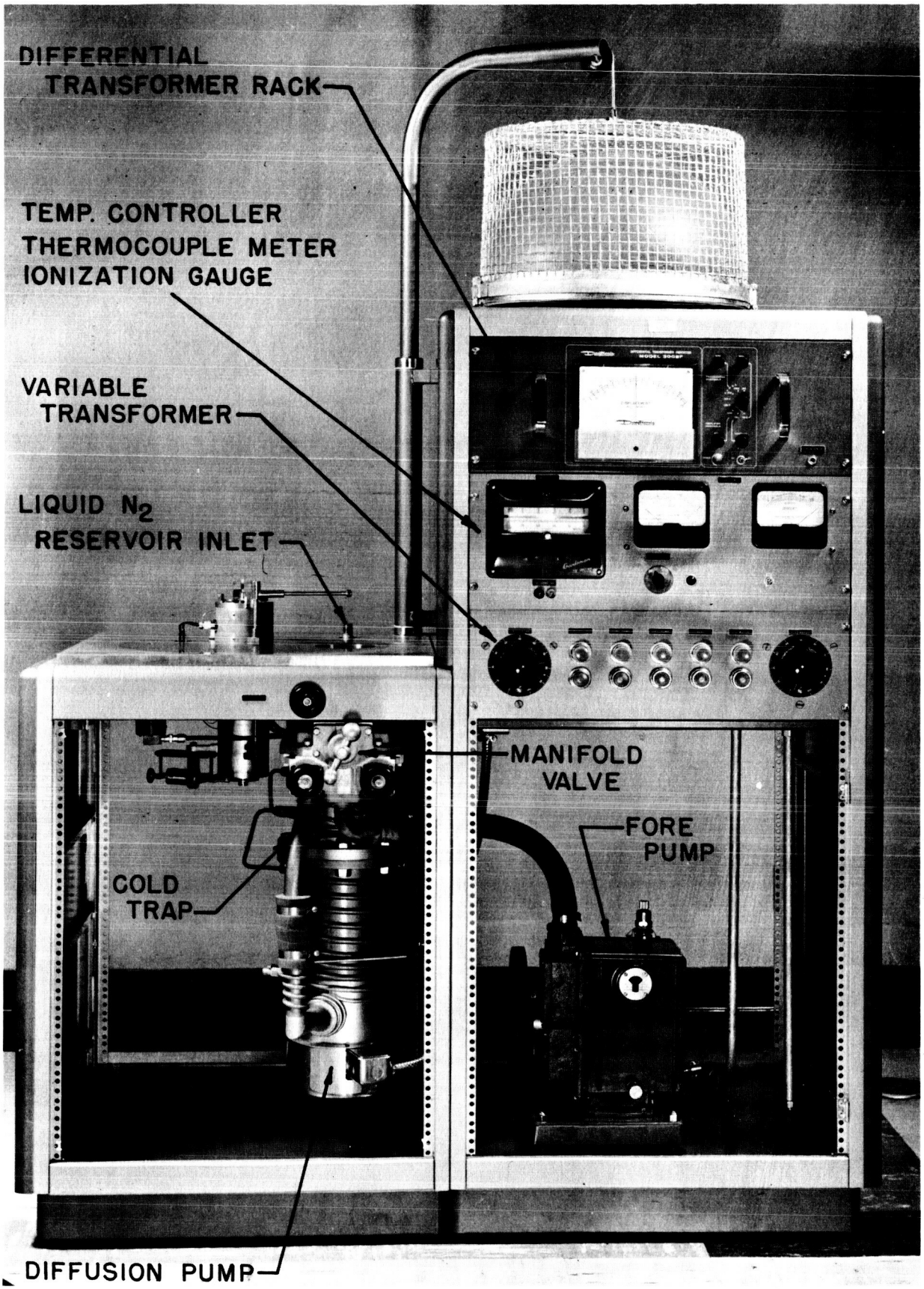

Fig. 2 - Vacuum Friction Apparatus

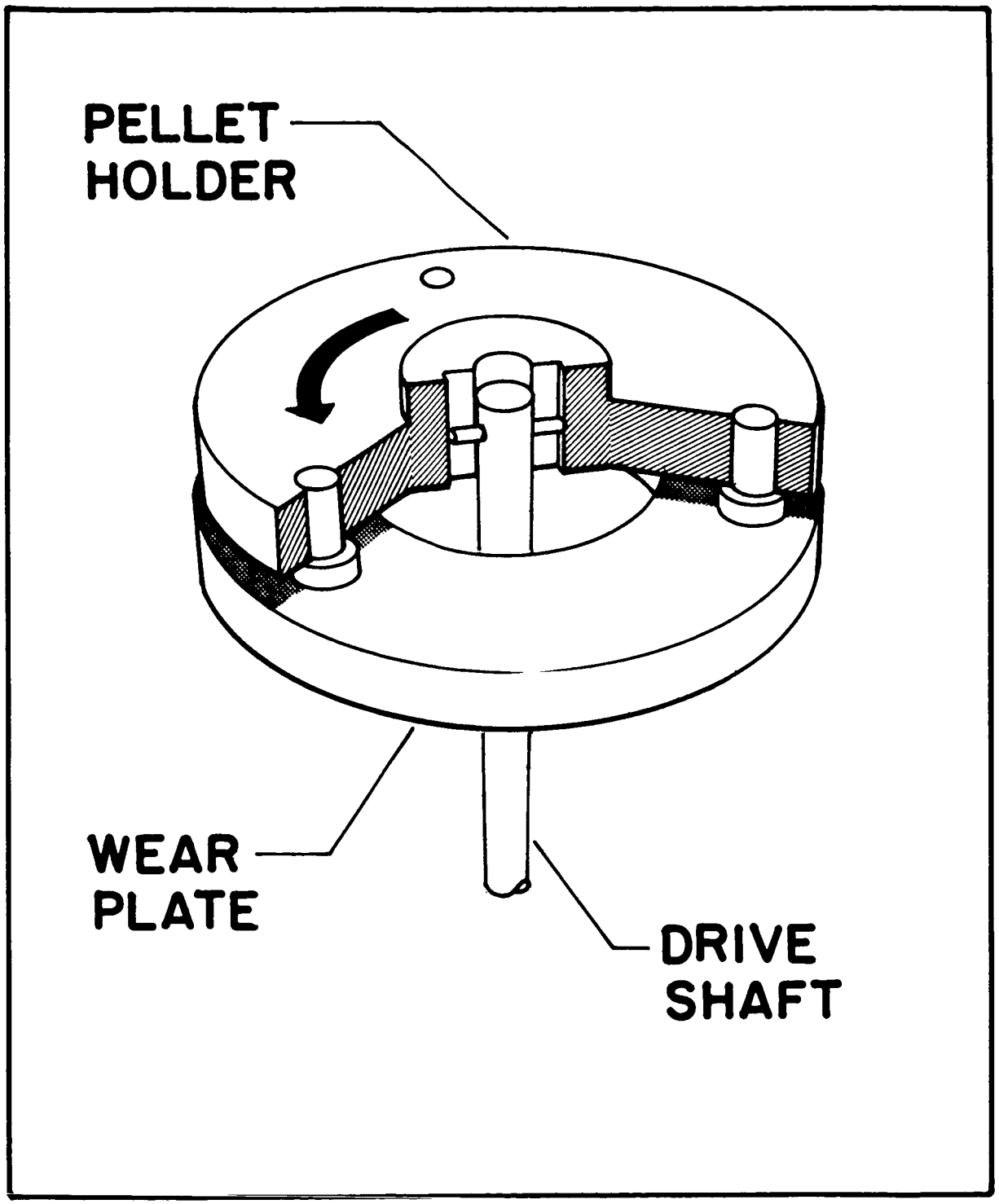

Fig. 3 - Three Pellet and Wear Plate Sliding Configuration

A large number of films were formulated using molybdenum diselenide ($MoSe_2$), tungsten disulfide (WS_2) and tungsten diselenide (WSe_2). These potential lubricant materials were combined individually with the binder sodium silicate. The three potential lubricant materials, $MoSe_2$, WS_2 and WSe_2, were also investigated as replacements for MoS_2 in the MLF-5 film formulation. The results of these screening runs are presented in Table III and indicate that these films do not warrant further investigation and that neither $MoSe_2$, WS_2, nor WSe_2 exhibit lower friction characteristics than MoS_2 in the MLF-5 formulation. However, these potential lubricant materials will be considered and evaluated in other films and as additives to MLF-5.

Silver bromate ($AgBrO_3$) was also formulated with sodium silicate and screened for use as a potential lubricant material. This material was judged to be too abrasive to warrant further investigation.

Bismuth telluride (Bi_2Te_3) was substituted for gold in the MLF-5 formulation and screened. The observed friction characteristics were very similar to MLF-5. This film should be formulated with different amounts of bismuth telluride and screened to see if lower friction characteristics can be obtained. When these screening runs are completed, the most favorable formulation may then be selected for frictional behavior investigation runs.

Bismuth powder was substituted for gold in the MLF-5 formulation in different amounts and screened in air. The formulation with the 10:1:1/7 lubricant-to-binder ratio produced the lowest friction characteristics and warrants further frictional behavior investigation.

The lubricant materials, MoS_2, graphite, and Au, and the developed binder material, Kasil 88 + NaF, were formulated in different lubricant-to-binder ratios. The film with the 10:1:5/7 ratio appeared to have the best friction characteristics and was selected for further investigation. The results of frictional behavior runs with this film and the MLF-5 film are presented in Table IV. Frictional behavior runs were conducted under the same sliding configuration, load, speed, and wear track conditions as the screening runs. Sixty-minute runs were made at three different temperature levels (80°, 250°, and 400°F) in air and vacuum environments. The results of the frictional behavior runs show that the friction characteristics of this film are very similar to the MLF-5 film. The wear-life of this film is discussed in the next section.

IV. WEAR-LIFE INVESTIGATION

The objectives of the wear-life investigation work include:

1. The accumulation of "baseline" wear-life data on the MLF-5 lubricant film which can be used as the basis for judging the performance of other developed lubricant films.

2. The determination of the effects of mating surface roughness and hardness on the friction and wear-life of MLF-5 and other developed lubricant films.

3. The providing of useful wear-life information to aid designers in deciding whether or not MLF-5 (or other developed lubricant film) might be considered for particular applications.

A three-pellet wear track plate sliding configuration as shown in Fig. 3 was used in this investigation. Wear-life is the time required to wear away the lubricant applied to the ends of the pellets. The results of 44 wear-life runs are presented in Tables V and VI (in Appendix).

The wear-life runs were performed on the wear-life pellet apparatus shown in Fig. 4. The lubricant film was applied only to the flat ends of the three pellets which were rigidly mounted in the pellet holder. The pellet holder was driven at 900 rpm (765 fpm) and loaded to 300 gm/contact (13.5 psi projected area). The 440 C stainless steel wear track plate was hardened to 55-59 Rockwell C and the surface roughness was 4 - 6 rms. All 44 runs were conducted in the laboratory air atmosphere.

The wear-life apparatus consists of a tester and a control unit (see Fig. 4). The control unit totalizes the elapsed running time (in hours of wear-life), and shuts off the tester when the high friction shut-off switch on the tester is actuated. In the tester (Fig. 5), an 1,800 rpm synchronous motor drives a spindle through an O-ring belt and pulley arrangement at 900 rpm. The drive spindle is supported by two flanged ball bearings (1/4 in. bore x 1/2 in. O.D.). A small roll pin is positioned at the top of the spindle which engages two vertical grooves in the hole at the center of the pellet holder. Power is transmitted from the spindle to the pellet holder through this roll pin. The pellet holder is the same type as that used on the vacuum friction apparatus and contains three rigidly held 440 C stainless steel pellets. Rotation of the drive spindle causes the three pellets mounted on the pellet holder to slide on the wear track plate (similar to that used on the vacuum friction apparatus). The wear track plate is held in position on top of a turntable by two 1/4 in. diameter pins which fit holes in the wear track plate. The turntable is free to rotate because it is supported from the base of the tester by a full compliment torque-tube type aircraft ball bearing (2-5/16 in. bore x 2-7/8 in. O.D.). Rotation of the turntable is limited by a three-pin arrangement; one on the turntable and two on the tester base. The pin on the turntable and one on the base serves as contacts for a high friction shut-off switch. Turntable rotation is resisted by a calibrated tension spring located inside of the spring housing.

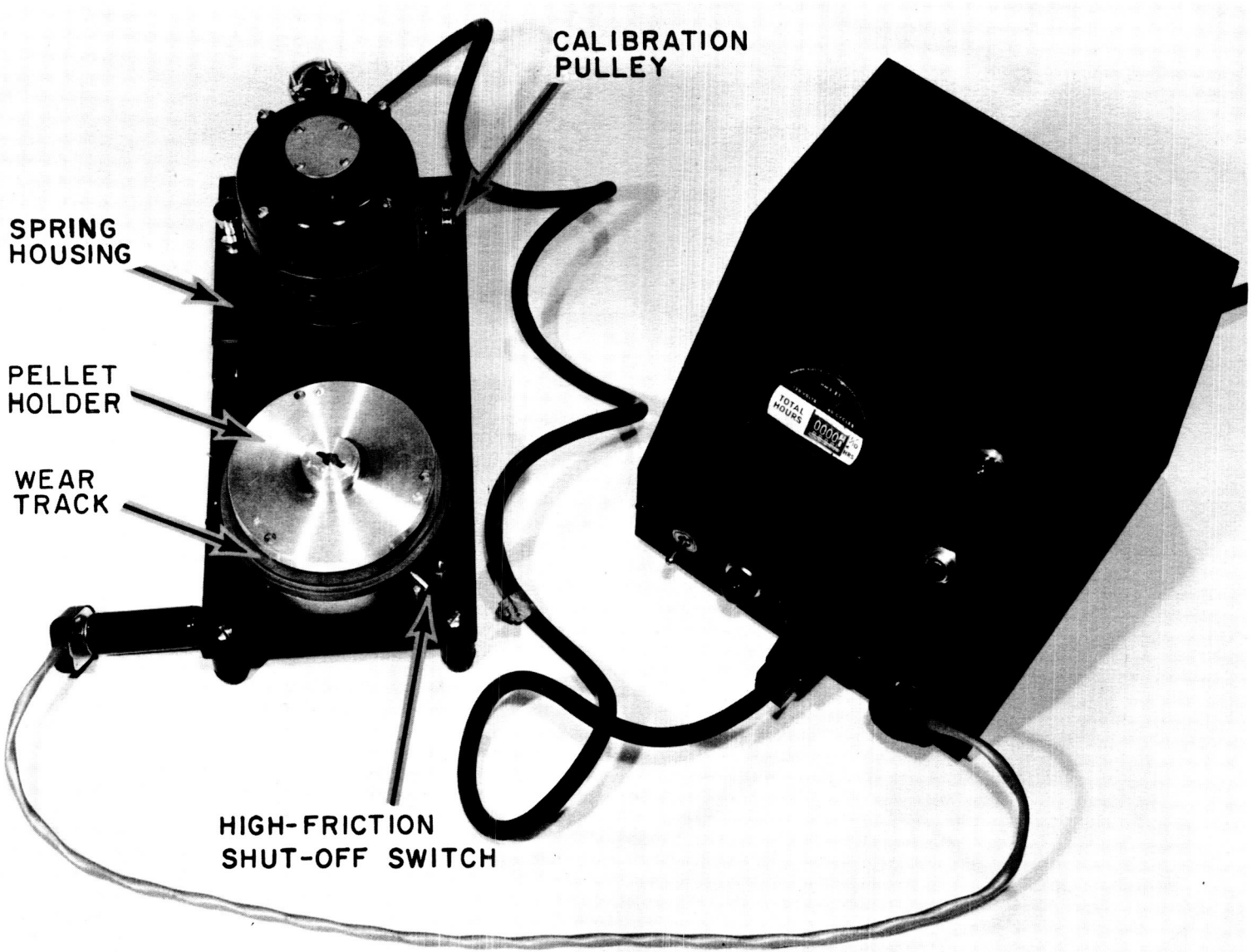

Fig. 4 - Wear-Life Tester and Control Unit

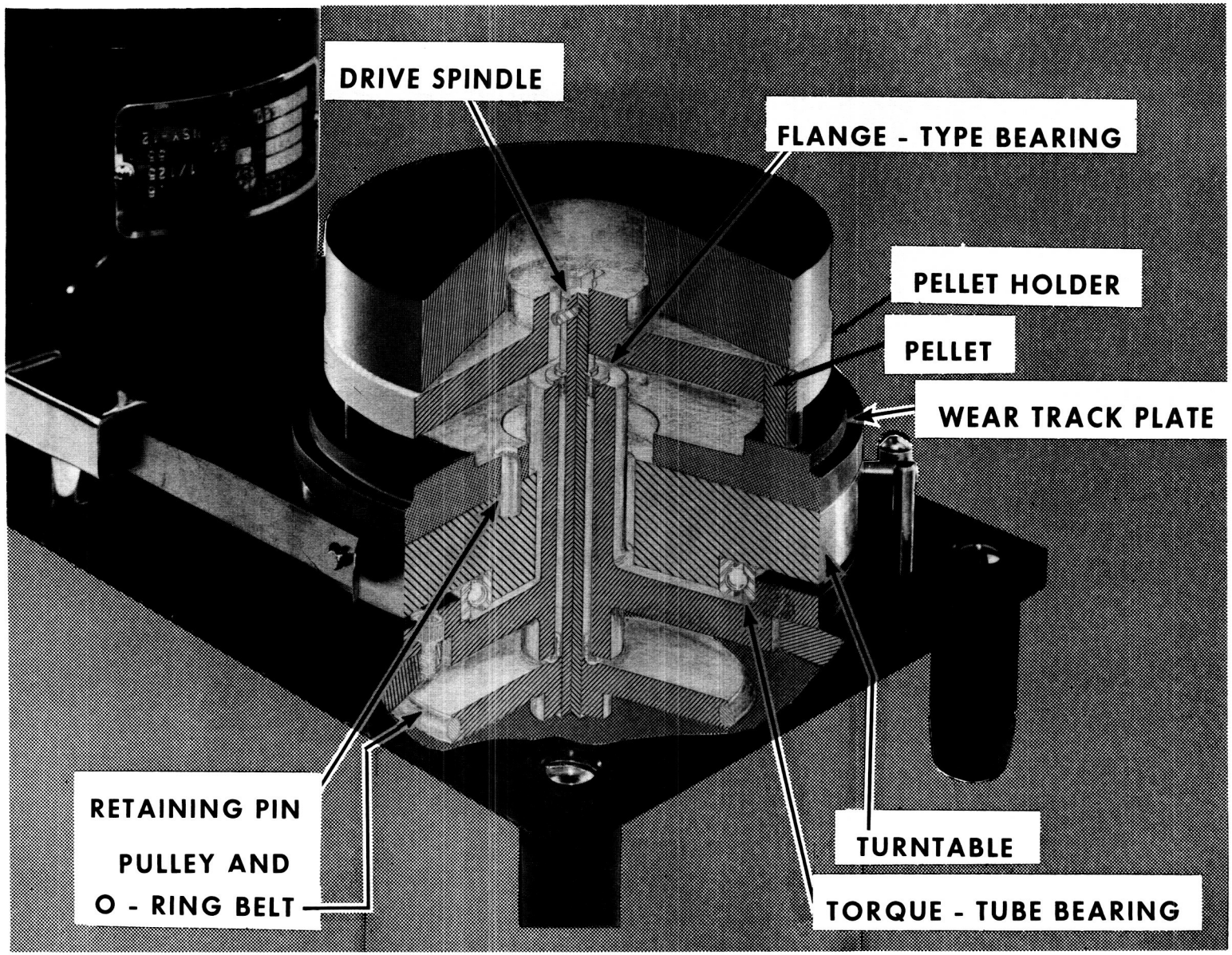

Fig. 5 - Cut-Away View of Wear-Life Tester

It is attached to the turntable with a thin brass strip. This spring is calibrated with a dead weight; a pulley is provided on the tester base to aid in spring calibration. The spring is pre-loaded within the housing so that a predetermined frictional torque (caused by the pellets rubbing against the wear track) must be reached before the spring is extended far enough to allow the high friction cut-off switch to actuate and thus signal the control unit to shut down the tester.

In some cases wear-life runs have lasted for nearly nine days. In order that the required data could be collected, six additional wear-life testers were fabricated and assembled. One of these testers was sent to the Marshall Space Flight Center for use in wear-life studies at that facility. The completed testers along with their control units are shown in Fig. 6. They are mounted on a special bench top setup which allows the runs to be made either in air or a controlled atmosphere. Each station on the bench top is equipped with a clear plastic chamber which may be clamped down over a tester and sealed. Valves and piping under the bench top allow a controlled flow of an inert gas to be supplied to each station. The temperature in the plastic enclosure is kept constant (approximately 70°F) with a small heat exchanger attached to the drive motor.

The results of 30 wear-life runs with MLF-5 conducted in air show that the average wear-life is 43.5 hr. (see Table V in the Appendix). The wear-life with 95 per cent confidence is between 32.4 and 58.4 hr. The results of 14 wear-life runs with the modified MLF-5 film (MoS_2 + graphite + Au/Kasil 88 + NaF) show that the average wear-life is 66.5 hr. (see Table VI in the Appendix). The wear-life with 95 per cent confidence is between 43.2 and 103.3 hr. A review of the results of all the wear-life runs conducted in the air atmosphere, shows that the film with the developed binder material (Kasil 88 + NaF) provided a 50 per cent greater average wear-life than MLF-5. This binder material offers the additional advantage of providing better protection against damage from moisture than the binder now used in MLF-5 (sodium silicate).

In the binder development studies, wear-life of Kasil 88 + NaF was much better in a nitrogen than in an air atmosphere. It is reasoned that a film formulated with the Kasil 88 + NaF binder may also wear longer in a nitrogen than in an air atmosphere.

Fig. 6 - Wear-Life Testers With Control Units

V. SPECIAL SOLID LUBRICANT FILM APPLICATION ACTIVITIES

During this report period (23 April 1963 - 22 May 1964) several miscellaneous parts were coated with bonded solid lubricant films for evaluation and use at NASA, Marshall Space Flight Center and other concerns (see Table VII). In nearly all cases the solid lubricant (MLF-5) must be sprayed to a certain thickness, and many times only on specific areas. Techniques for coating these parts with solid lubricant film had to be worked out for each different item. When overspray was not permitted, jigs and fixtures were made to shield surfaces which were not to be coated.

The compatibility of MLF-5 and a commercially available solid lubricant film (specified by MSFC) with RP-1 rocket fuel was investigated during this period. The lubricants were contaminated by applying one drop of the fuel to the pellet end. The fuel was then allowed to soak into the lubricant for 30 min. before testing. The evaluation consisted of running the contaminated lubricant for 1 hr. at room temperature, the temperature of the track was then increased at a rate of approximately 5°F/min until a temperature of 400°F was reached (this occurred after 2 hr. total running time). The 400°F temperature was maintained for 30 min. and the track heater was shut off. The test was run for an additional 30 min. during which time the track temperature cooled to approximately 150°F. The friction coefficient was recorded continually throughout the 3 hr. test and the ranges of coefficients obtained are presented in Table VIII. The results indicated that both films were not dissolved or softened by RP-1 and that the films retained their lubricity after contamination.

Data were received from the Marshall Space Flight Center on high load tests with the MLF-5 lubricant film. In these tests a slider block was slid back and forth between two flat plates as shown in Fig. 7. The slider, having a contact area of 0.59 sq. in., was made of 440 C stainless steel and the plates were made of 4340 steel; both were hardened to 58-59 Rockwell C.

Tests with both the slider and plates coated with MLF-5 were run in air at room temperature. Loads were applied in 10,000 psi increments and the slider was driven in an oscillatory motion ($\pm$1/2 in.). The total travel at each load was 5 in. Friction coefficients for loads up to 150,000 psi for two tests are presented in Fig. 8. At the end of each test the film had a highly polished metallic luster and was still intact. The kinetic friction coefficients given in this graph include motion in both directions and range from 0.045 to 0.14. The tendency for the friction to decrease with load may be seen in Fig. 8.

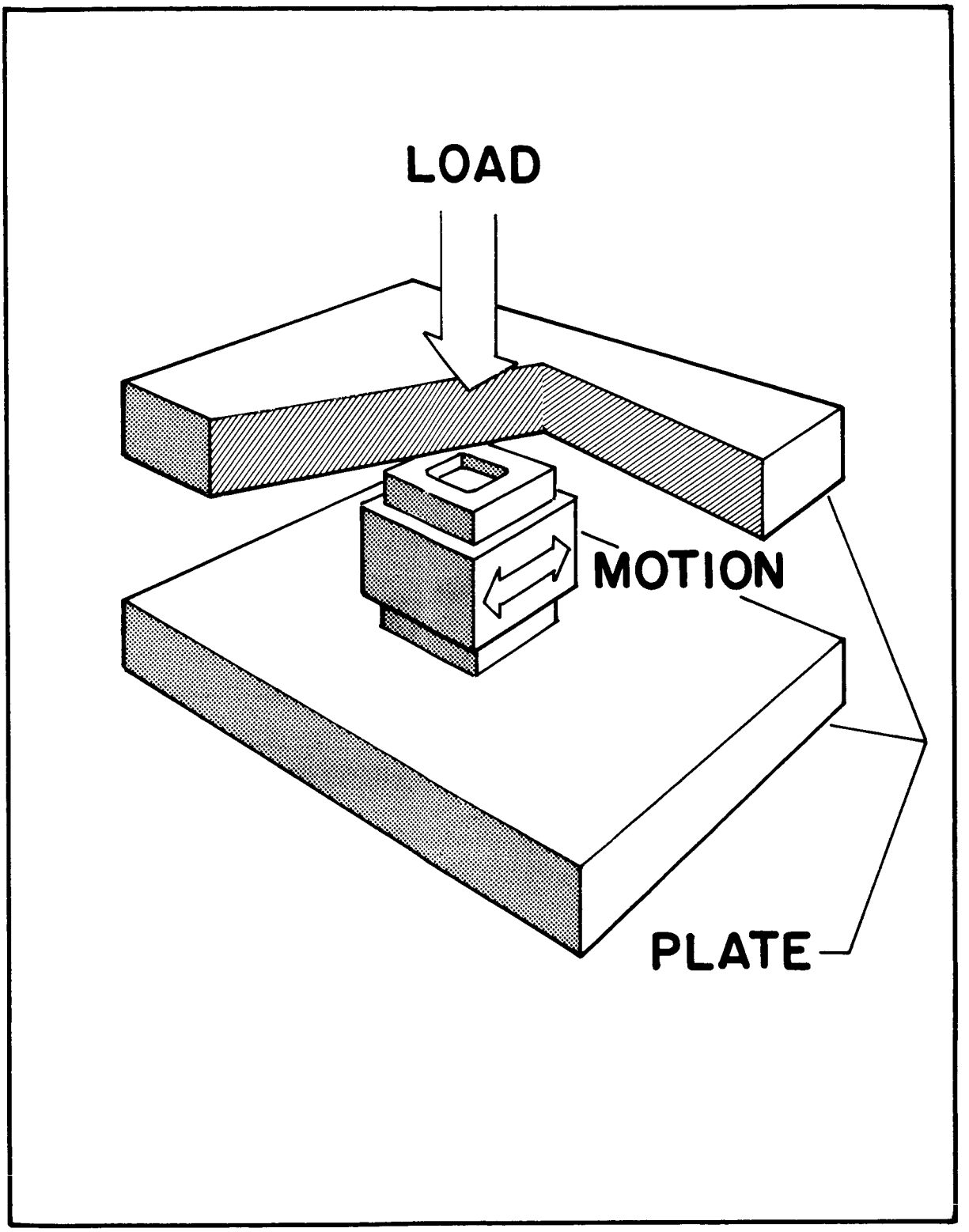

Fig. 7 - High Load Sliding Configuration Used at MSFC

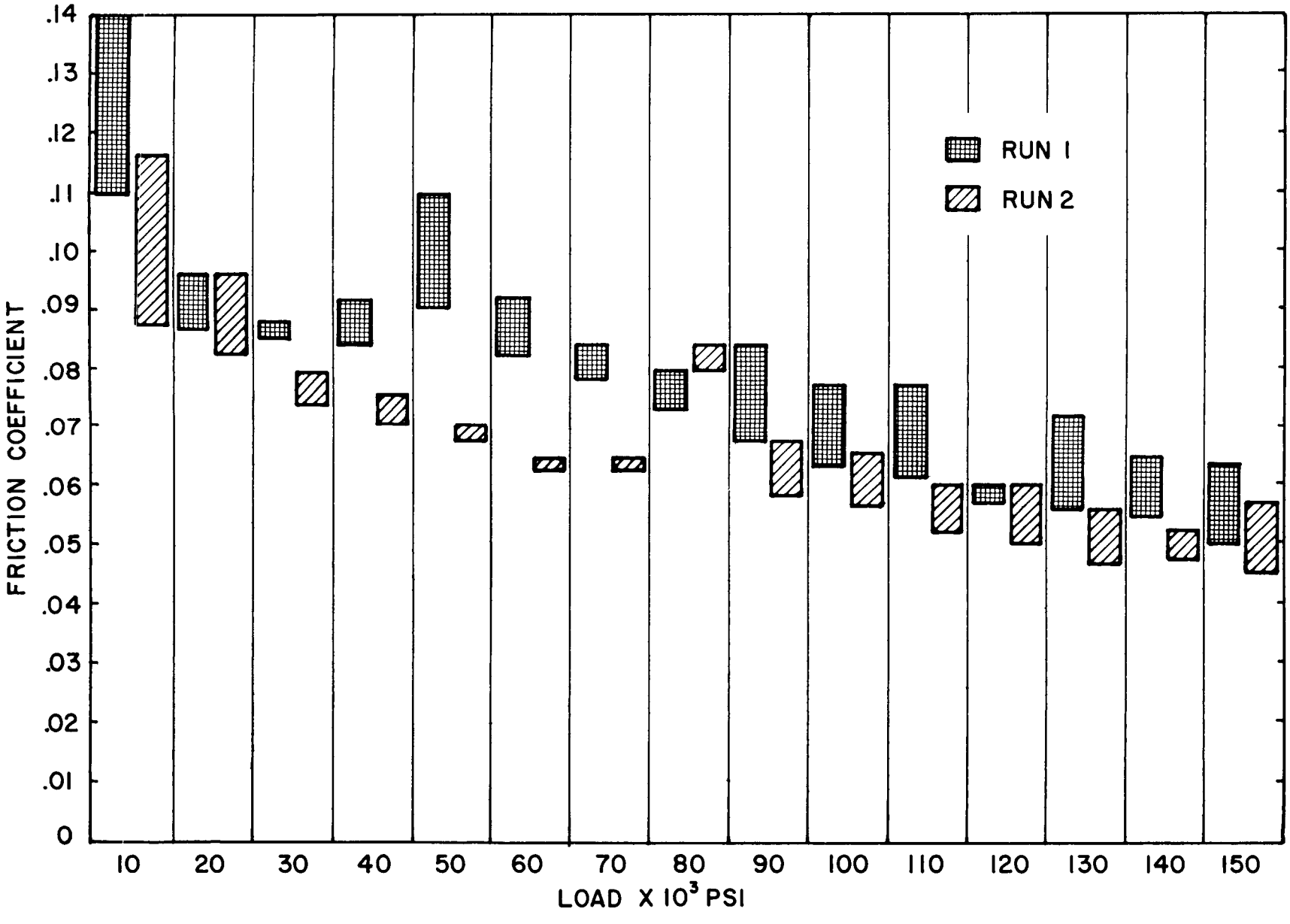

Fig. 8 - Friction Results From High Load Tests at MSFC

VI. ULTRA-HIGH VACUUM APPARATUS

An ultra-high vacuum apparatus was designed and built to investigate the frictional behavior of solid lubricant films applied to machine elements at ambient temperatures of 70° to 90°F and pressures below 10^{-10} Torr. The complete apparatus (shown in Fig. 9) consists of a test chamber, three ball-type cold traps, two mercury diffusion pumps, a mechanical forepump, and associated instrumentation all housed in a three-section modular console.

One-piece glass construction of the ultra-high vacuum system (shown in Fig. 10) was chosen because of the low outgassing properties of glass. At the top of the glass structure a stainless steel flange (4-1/2 in. O.D. x 2-1/2 in. I.D.) is connected to 70 mm. diameter glass tubulation through a graded seal and provides easy access to the test chamber. A one-liter test chamber is located immediately below the flange. The test chamber pressure is measured with a cold cathode magnetron gauge (which indicates pressures between 10^{-5} and 10^{-13} Torr, NRC 752 Redhead) attached to the test chamber. Three ball-type cold traps, just below the test chamber, prevents mercury or other condensibles from reaching the test chamber from the primary diffusion pump. (The vapor pressure of mercury at liquid N_2 temperature is less than 10^{-30} Torr.) Two of the cold traps are in the upper liquid nitrogen cooled dewar and the other trap is in the lower dewar. The dewar vacuum is maintained by a separate mechanical vacuum pump.

The primary vacuum pump, connected just below the lowest cold trap, is a three-stage, mercury vapor diffusion pump which has a pumping rate of 80 liters/sec. It is joined in series to a secondary, two-stage mercury vapor diffusion pump which has a pumping rate of 28 liters/sec. The mercury boilers of both pumps are connected by a small glass tubulation to prevent transfer of mercury from the primary pump to the secondary pump during bakeout of the system.

A standard McLeod gauge is connected to the system between the two mercury pumps. This gauge is used during the bakeout cycle to measure the pressure in the system from 10 to 10^{-5} Torr. The exhaust side of the secondary diffusion pump is connected to the intake of a mechanical forepump through a molecular sieve trap. Backstreaming oil vapor from the mechanical forepump is trapped by this molecular sieve trap.

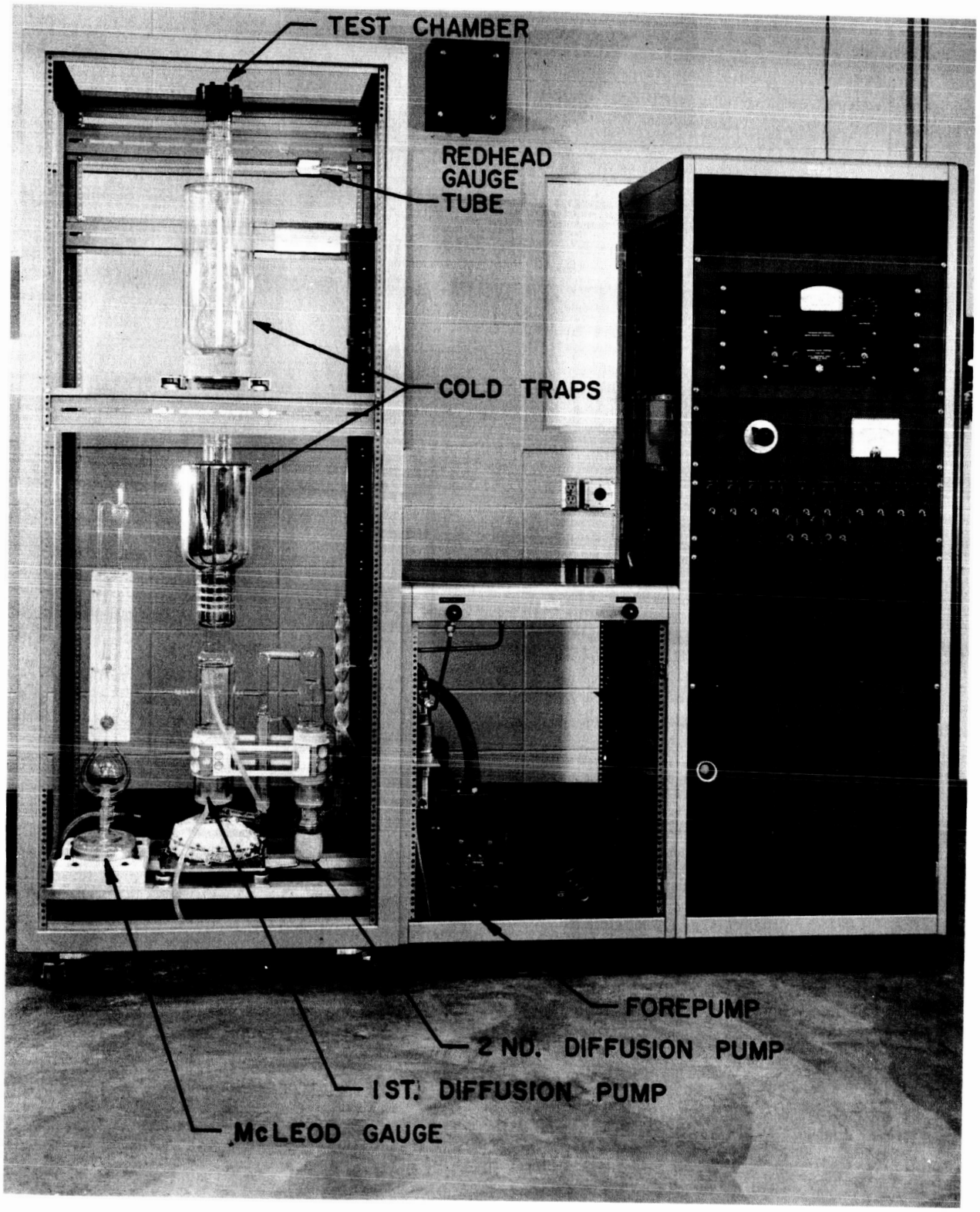

Fig. 9 - Ultra-High Vacuum Apparatus

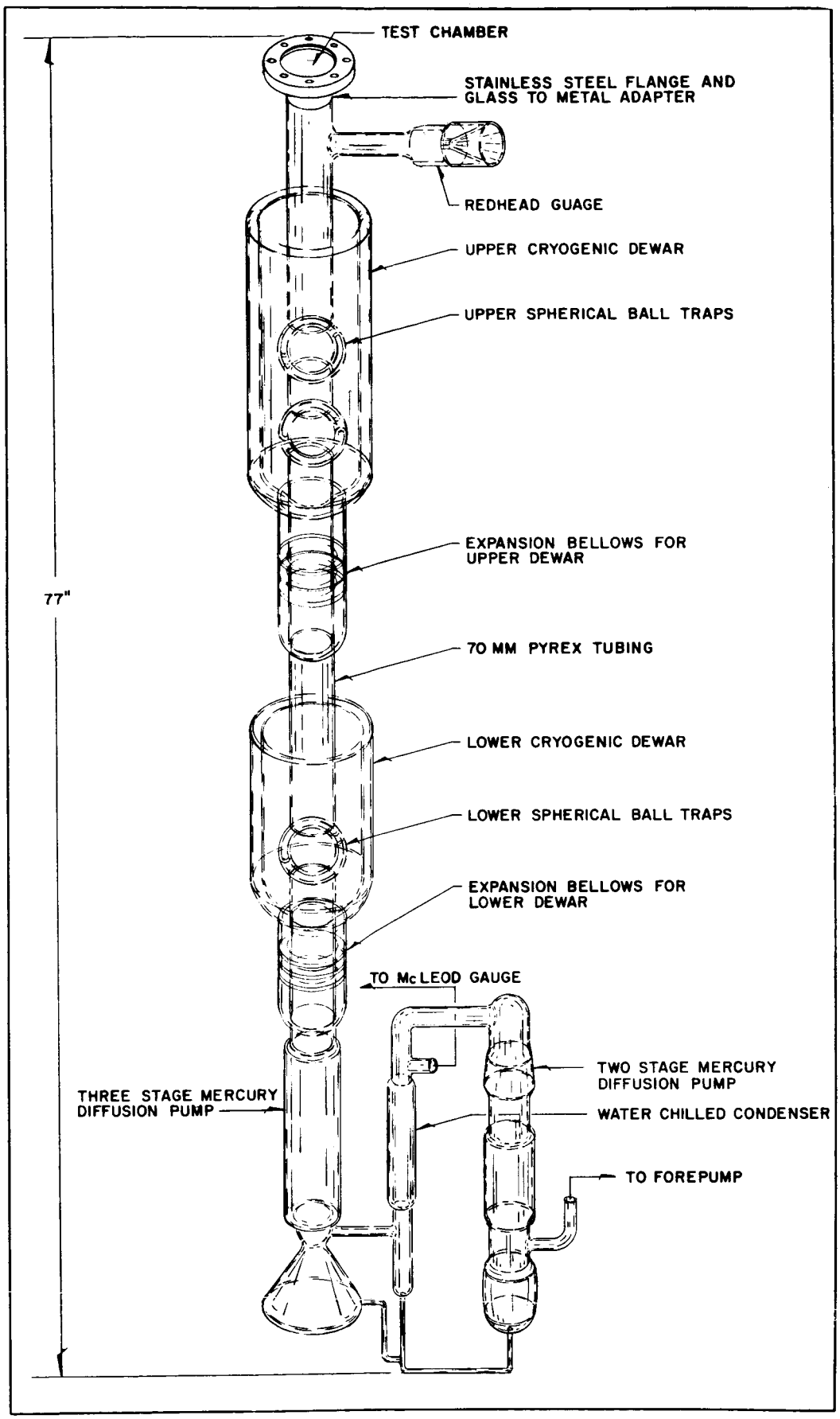

Fig. 10 - One-Piece Glass Assembly - Ultra-High Vacuum System

To attain pressures below 10^{-10} Torr all surfaces within the ultra-high vacuum system must be thoroughly cleaned and outgassed. Outgassing is accelerated by baking the system at temperatures over 400°C. Seven specially fabricated heating mantles are used to bake the test chamber, cold traps, magnetron gauge, top stage of the primary diffusion pump, and all interconnecting glass tubulations. The metal flange sealing the test chamber is ultimately heated to 480°C during the bakeout while the Kovar-to-glass seal and remaining glassware are heated to approximately 425°C. The rate at which the temperature of the system may be increased is governed by the pressure. That is, the bake-out temperature may be increased (above room temperature) as long as the system pressure (measured by the McLeod gauge) remains below 10^{-5} Torr.

At the end of the bakeout cycle the primary diffusion pump is started and liquid nitrogen is added to the lower cold trap. The rest of the system is maintained at the peak bakeout temperature about 30 min. longer to allow the mercury vapor in the test chamber and upper system to condense in the lower cold trap. The top flange is then allowed to cool to room temperature before adding liquid nitrogen to the upper cold trap. This procedure prevents gases (desorbing from the steel flange) from condensing on the walls of the upper cold trap and later redesorbing when the level of liquid nitrogen drops. The ultimate pressure in the system may be reached shortly after liquid nitrogen has been added to the upper cold traps and the temperature in the test chamber been allowed to reach thermal equilibrium at room temperature.

To date, the apparatus has demonstrated the capability of maintaining a pressure of 6 to 8 x 10^{-13} Torr (indicated by the Redhead gauge) over a 4-hr. period and has also exhibited an ultimate pressure of 1.6 x 10^{-13} Torr. Since low pressures (1.6 x 10^{-13} Torr) can be achieved with a metal flange in the system, work will proceed toward conducting a solid lubricant experiment in this vacuum system. The first experiment or setup will include a set of unlubricated R-4 size bearings (1/4 in. bore x 5/8 in. O.D.). The designing of the test spindle, drive, and instrumentation is in progress and is being coordinated with MSFC so that results obtained here may be compared to those obtained at MSFC at higher pressures. In the first series of experiments, it is planned to apply a 3-lb. thrust load on the bearings and drive at 1,800 rpm with no heat applied to the test chamber. Bearing friction (from two bearings) will be measured periodically throughout the wear-life of the lubricant.

VII. MULTISTATION VACUUM FRICTION AND WEAR APPARATUS PRELIMINARY DESIGN

At present, the time required for a mission of space vehicles may range from a few hours to months; much longer missions are contemplated. If

lubricants are to be developed to meet projected mission requirements then long term testing is needed to evaluate potential lubricants. Information gained in long term tests is valuable in lubricant development and also provides a basis for judging whether or not a lubricant should be considered for a particular application. Requirements have been established for an apparatus which should satisfy the need for testing solid lubricants. Many of these requirements are outlined in Table IX.

Lubricant applied to lightly loaded bearings is expected to have a long wear-life, perhaps several months. Heavily loaded bearings will probably have short wear-lives. The prospect of long term tests and the need for both light and heavy load capabilities indicates that a multistation system is required. The prospect of evaluating lubricant wear-lives on three types of bearings over a broad range of load, speed and temperature suggests that several types of test chambers and fixtures are needed.

Based on the tabulated requirements and the considerations listed above, the preliminary design of a multistation system has been worked out. This system design consists of eight pumping stations mounted on a table for easy access. Instrumentation and controls are mounted in a free standing console. A bakeout oven and auxiliary pumping unit is also provided.

Since long term operation is contemplated it is proposed to use a getter-ion type vacuum pump. A further advantage of using such a pump is the absence of oil type contaminants that might affect friction and wear behavior of solid lubricants. In a pumped down condition very little power is required to sustain the operation of this type of pump. This property of the getter-ion pumps allows a small automatic standby power unit to supply the power required to keep all the stations operating during commercial power interruptions. Reliable large power networks are expected to have several interruptions each year with one of these interruptions lasting for an hour or more.

A sketch of one station is shown in Fig. 11. In this station a 15 liter/sec water cooled getter-ion vacuum pump is connected to a 1-1/2-in. tee. One outlet of the tee is connected to a 1/2-in. bleed valve. The last outlet to the tee has a 2-1/2 in. flange which is connected to a test chamber.

Several test chambers and test fixtures are required if the system is to accommodate all types of bearings and tests are to be run over the desired conditions. Only one test chamber (for instrument ball bearings) is shown. The same bearing housing should also accommodate journal bearings. The ball bearings will be subjected to a thrust loaded (maximum of 3 lb.) with a spring positioned on the shaft between the two test bearings. The spindle is driven through a thin 302 stainless steel housing with a magnetic coupling. Frictional torque on the bearings will be measured and used to detect solid lubricant film

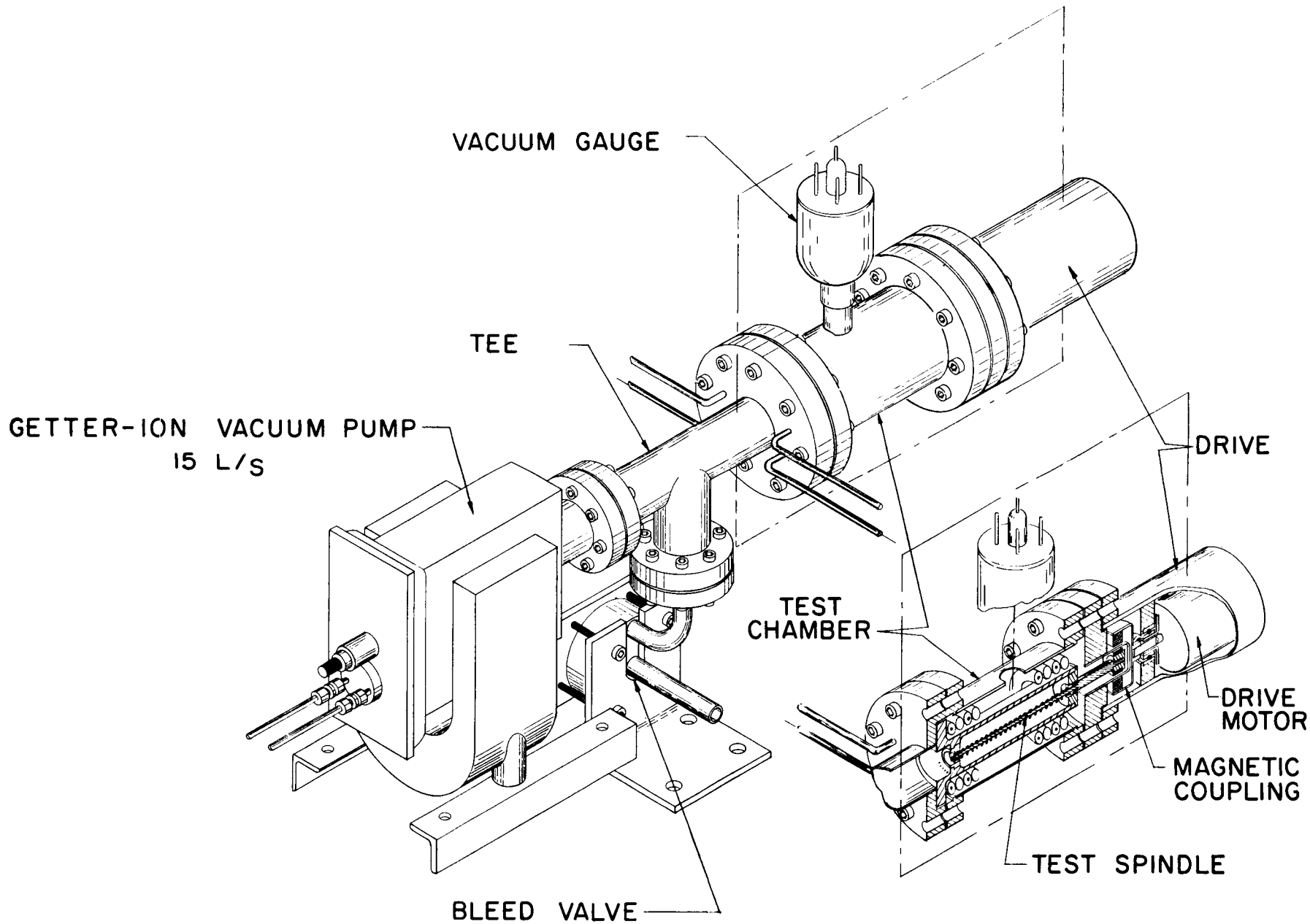

Fig. 11 - Multistation Vacuum Friction and Wear Apparatus

failure. A Bayard-Alpert type hot cathode ionization vacuum gauge is connected to each test chamber for sensing chamber pressure. Electrical resistance heating elements positioned on the bearing housing will provide a means of heating the test bearings to the desired temperature between room temperature and 1000°F. Provisions are also made to cool these bearings with liquid nitrogen (-320°F). Cooling coils are positioned on the bearing housing (next to the heating element) for this purpose.

If desired, an orifice type opening can be positioned between the end of the drive spindle and the vacuum system to limit the conductance from the test chamber. Such an arrangement permits the conductance of specific bearing setups to be simulated.

The stations of this apparatus will not be connected mechanically, but they will be interconnected electrically (power and instrumentation). Two power supplies for the getter-ion pump, a starter and a sustainer will be used. The starter power supply is water cooled. One power supply and measuring circuit unit will be used for all vacuum gauges which are connected to each test chamber.

In operation two solid-lubricated bearings are installed on the shaft in the test chamber. The test chamber is bolted in position on the station. An auxiliary vacuum system is connected to the outlet of the bleed valve. This auxiliary pumping unit is mounted on an equipment cart and consists of a forepump, a 2-in. oil diffusion pump, and a liquid nitrogen cold trap. The bleed valve is opened and if desired the entire system is baked. An oven capable of operation to 400°C may be lowered over each station for the bakeout operation. After baking, the getter-ion pump is turned on and the bleed valve is closed. The bearings are brought to the desired temperature and speed and a test is under way. The test chamber pressure and bearing speed, temperature, and friction are sensed and recorded periodically.

VIII. FUTURE WORK

Based on the solid film lubricant research work conducted during the past three years, we recommend that the following work be performed.

1. Solid lubricant films using current lubricant materials (MoS_2, graphite, gold, bismuth, etc.) and new or developed binder materials (aluminum phosphate) should be formulated and evaluated.

2. Solid lubricant films using new potential lubricant materials and established binder materials (sodium silicate and potassium silicate) should be formulated and evaluated.

3. Frictional behavior investigation runs on films exhibiting better friction characteristics during screening runs than those of MLF-5 under established test conditions should be conducted.

4. Wear-life runs with developed lubricant films using the wear-life testers operating under established test conditions (including a dry nitrogen environmental atmosphere) should be conducted.

5. The bearing test chamber and associated hardware to be used with the ultra-high vacuum apparatus should be designed and fabricated.

6. Friction and wear-life evaluation runs with developed lubricant films applied to ball bearings (R4 series) should be conducted in vacuum environments below 10^{-10} Torr.

7. MLF-5 or other developed lubricant films which exhibit better friction and wear characteristics than MLF-5 should be applied to selected test specimens and forwarded to the Marshall Space Flight Center or other NASA specified concerns for additional evaluation when requested.

8. The feasibility of automating the application techniques of MLF-5 and similar films to machine elements using external mix type air gun and/or liquid electrostatic spray techniques should be determined.

9. Guide lines for quality control procedures, tolerances, and coating specifications applicable to developed solid lubricant films should be established.

BIBLIOGRAPHY

1. Hopkins, Vern, Gaddis, Donald, Kobett, Donald, and Hughes, Roland, "Research on Bearing Lubricants for Use in a High Vacuum," Annual Summary Report, 22 February 1961 to 22 March 1962.

2. Hopkins, Vern, and Gaddis, Donald, "Research on Bearing Lubricants for Use in High Vacuum," Annual Summary Report, 23 March 1962 to 22 April 1963.

APPENDIX

TABLES I - IX

TABLE I

FRICTION AND WEAR-LIFE RESULTS FROM KASIL 88 BINDER SCREENING RUNS

Load - 2.2 psi (projected area) Speed - 765 fpm
Wear track material - 440 C stainless steel
Wear track hardness - 55 to 59 Rockwell C
Wear track temperature - 80°F (no heat)
Wear track roughness - 4 to 6 rms

Environmental Atmosphere - Nitrogen

Additive-% by wt.	Thickness (in.)	Friction Coefficient	Wear-Life Min.	Wear-Life (Min/in x 10^4)
K_3PO_4-3.3	0.00120	0.55 - 0.6+	4	(0.3)
K_3PO_4-3.3	0.00125	0.55 - 0.6+	1	(0.1)
K_3PO_4-9.4	0.00125	0.55 - 0.6+	8	(0.6)
K_3PO_4-9.4	0.00130	0.55 - 0.6+	5	(0.4)
K_3PO_4-12.1	0.00100	0.32 - 0.6+	26	(2.6)
K_3PO_4-12.1	0.00100	0.50 - 0.6+	28	(2.8)
K_3PO_4-14.7	0.00130	0.18 - 0.6+	57	(4.4)
K_3PO_4-14.7	0.00110	0.30 - 0.6+	28	(2.5)
K_3PO_4-17.1	0.00100	0.40 - 0.6+	14	(1.4)
K_3PO_4-17.1	0.00085	0.6+ - 0.6+	4	(0.5)
K_3PO_4-19.4	0.00120	0.27 - 0.6+	25	(2.3)
K_3PO_4-19.4	0.00115	0.34 - 0.6+	88	(7.6)
K_3PO_4-21.6	0.00100	0.6+ - 0.6+	3	(0.3)
K_3PO_4-21.6	0.00095	0.6+ - 0.6+	4	(0.4)
K_3PO_4-23.7	0.00140	0.36 - 0.6+	20	(1.4)
K_3PO_4-23.7	0.00120	0.30 - 0.6+	26	(2.2)
K_3PO_4-27.5	0.00120	0.6+	7	(0.6)
K_3PO_4-27.5	0.00100	0.33 - 0.6+	11	(1.1)
K_3PO_4-31.0	0.00130	0.36 - 0.6+	7	(0.5)
K_3PO_4-31.0	0.00140	0.42 - 0.6+	14	(1.0)
K_3PO_4-34.1	0.00090	0.55+ - 0.6+	9	(1.0)
K_3PO_4-34.1	0.00065	0.55+ - 0.6+	5	(0.8)
K_3PO_4-37.0	0.00070	0.48 - 0.6	21	(3.0)
K_3PO_4-37.0	0.00100	0.37 - 0.40	10	(1.0)
NaF - 0	0.00110	0.40 - 0.6+	29	(2.6)
NaF - 0	0.00120	0.40 - 0.6+	17	(1.4)
NaF - 6.5	0.00110	0.33 - 0.6+	23	(2.1)
NaF - 6.5	0.00100	0.35 - 0.6+	56	(5.6)
NaF -12.1	0.00105	0.6+ - 0.6+	100*	>(9.5)*

TABLE I (Continued)

Additive- % by wt.	Thickness (in.)	Friction Coefficient	Wear-Life Min.	Wear-Life (Min/in x 10^4)
NaF -12.1	0.00120	0.38 - 0.6+	19	(1.6)
NaF -17.1	0.00080	0.6+ - 0.6+	105*	>(13.1)*
NaF -17.1	0.00120	0.6+ - 0.6+	60*	>(5.0)*
NaF -21.6	0.00130	0.6+ - 0.6+	60*	>(4.6)*
NaF -21.6	0.00115	0.6+ - 0.6+	120*	>(10.4)*
NaF -21.6	0.00110	0.38 - 0.6+	65	(5.9)
NaF -21.6	0.00100	0.6+ - 0.6+	18	(1.8)
NaF -21.6	0.00130	0.29 - 0.39	130	(10.0)
NaF -25.6	0.00100	0.45 - 0.6+	40	(4.0)
NaF -25.6	0.00120	0.40 - 0.6+	45	(3.7)
NaF -25.6	0.00120	0.45 - 0.6+	150	(12.5)
NaF -25.6	0.00100	0.35 - 0.6+	90	(9.0)
NaF -25.6	0.00100	0.40 - 0.6+	50	(5.0)
NaF -25.6	0.00140	0.50 - 0.6+	40	(2.9)
NaF -29.2	0.00105	0.50 - 0.6+	90*	>(8.6)*
NaF -29.2	0.00100	0.6+ - 0.6+	60*	>(6.0)*
NaF -29.2	0.00100	0.28 - 0.6+	210	(21.0)
NaF -29.2	0.00125	0.45 - 0.6+	50	(4.0)
NaF -32.6	0.00110	0.45 - 0.6+	190	(17.3)
NaF -32.6	0.00100	0.45 - 0.6+	80	(8.0)
NaF -32.6	0.00120	0.50 - 0.6+	240*	>(20.0)*
NaF -32.6	0.00125	0.50 - 0.6+	210*	>(16.8)*
NaF -35.5	0.00120	0.6+ - 0.6+	180*	>(15.0)*
NaF -35.5	0.00125	0.6+ - 0.6+	60*	>(4.8)*
NaF -35.5	0.00140	0.6+ - 0.6+	130	(9.3)
NaF -35.5	0.00120	0.45 - 0.6+	900	(75.0)
NaF -35.5	0.00110	0.30 - 0.6+	450	(40.9)
NaF -35.5	0.00110	0.40 - 0.55	380*	>(34.5)*
NaF -38.2	0.00130	0.55 - 0.6+	810	(62.3)
NaF -38.2	0.00100	0.6+ - 0.6+	465	(46.5)
NaF -38.2	0.00130	0.50 - 0.6+	180*	>(13.9)*
NaF -38.2	0.00075	0.43 - 0.55	280	(37.4)
NaF -38.2	0.00140	0.44 - 0.6+	105*	>(7.5)*
NaF -40.8	0.00075	0.50 - 0.6+	780	(104.0)
NaF -40.8	0.00100	0.6+ - 0.6+	345*	>(34.5)*
NaF -45.0	0.00095	0.6+ - 0.6+	390	(41.1)
NaF -45.0	0.00093	0.55 - 0.6+	630	(67.7)
NaF -45.0	0.00087	0.30 - 0.44	600*	>(69.0)
NaF -50.9	0.00100	0.40 - 0.55	350*	>(35.0)
NaF -50.9	0.00082	0.42 - 0.55	390*	>(47.6)

TABLE I (Concluded)

Additive- % by wt.	Thickness (in.)	Friction Coefficient	Wear-Life Min.	Wear-Life (Min/in x 10^4)
NaF -50.9	0.00115	0.34 - 0.48	660*	>(57.4)
NaF -55.0	0.00090	0.26 - 0.32	25	(2.8)
NaF -55.0	0.00082	0.28 - 0.36	210*	>(25.6)

* Run stopped before film had worn through.

TABLE II

FRICTION RESULTS FROM MLF-5 SCREENING RUNS

Load - 50 gm/contact
Speed - 900 rpm (765 fpm)

Atmosphere - Air
Temperature - 80° to 400°F

Wear Track Description

Material - 440 C Stainless Steel
Hardness - 55 to 59 Rockwell C
Roughness - 4 to 6 rms

Running Time (min.)	Wear Track Temp. (°F)	Coefficients of Friction				
		Run No. 1	Run No. 2	Run No. 3	Run No. 4	Run No. 5
0	80	0.11	0.14	0.17	0.18	0.16
10	80	0.17	0.15	0.22	0.23	0.23
20	80	0.18	0.17	0.24	0.23	0.23
30	80	0.19	0.18	0.24	0.23	0.23
40	150	0.20	0.15	0.20	0.19	0.16
50	200	0.13	0.12	0.18	0.14	0.10
60	250	0.09	0.09	0.14	0.11	0.13
70	300	0.13	0.09	0.11	0.10	0.13
80	350	0.17	0.13	0.14	0.14	0.13
90	400	0.17	0.22	0.19	0.22	0.19
100	400	0.18	0.22	0.23	0.24	0.22
110	400	0.19	0.22	0.23	0.24	0.25
120	400	0.20	0.22	0.26	0.22	0.24

TABLE III

FRICTION RESULTS FROM SCREENING RUNS

Load - 50 gm/contact (2.2 psi) Speed - 900 rpm (765 fpm)
Temperature - 90° to 400°F Atmosphere - Air

Wear Track Description

Material - 440 C Stainless Steel
Hardness - 55 to 59 Rockwell C
Roughness - 4 to 6 rms

Lubricant(s)	Binder	Lubricant/Binder Weight Ratio	Friction Coefficient Range
$MoSe_2$	Sodium Silicate	13.7/7	0.20 - 0.5+
$MoSe_2$	Sodium Silicate	13.7/7	0.20 - 0.42
$MoSe_2$	Sodium Silicate	13.7/5.25	0.24 - 0.5+
$MoSe_2$	Sodium Silicate	13.7/5.25	0.1 - 0.5+
$MoSe_2$, graphite, Au	Sodium Silicate	13.7:1:5/5	0.13 - 0.20
$MoSe_2$, graphite, Au	Sodium Silicate	13.7:1:5/5	0.13 - 0.5+
$MoSe_2$, graphite, Au	Sodium Silicate	13.7:1:5/7	0.16 - 0.29
$MoSe_2$, graphite, Au	Sodium Silicate	13.7:1:5/7	0.15 - 0.28
$MoSe_2$, graphite, Au	Sodium Silicate	13.7:1:5/8.75	0.19 - 0.5+
$MoSe_2$, graphite, Au	Sodium Silicate	13.7:1:5/8.75	0.19 - 0.5+
WS_2	Sodium Silicate	14.6/5.25	0.15 - 0.5+
WS_2	Sodium Silicate	14.6/5.25	0.20 - 0.5+
WS_2	Sodium Silicate	14.6/7	0.02 - 0.54
WS_2	Sodium Silicate	14.6/7	0.03 - 0.33
WS_2	Sodium Silicate	14.6/8.75	0.12 - 0.5+
WS_2	Sodium Silicate	14.6/8.75	0.15 - 0.5+
WS_2, graphite	Sodium Silicate	14.6:0.3/7	0.17 - 0.37
WS_2, graphite	Sodium Silicate	14.6:0.3/7	0.06 - 0.18
WS_2, graphite	Sodium Silicate	14.6:1/7	0.13 - 0.25
WS_2, graphite	Sodium Silicate	14.6:1/7	0.15 - 0.28
WS_2, graphite	Sodium Silicate	14.6:3/7	0.23 - 0.39
WS_2, graphite	Sodium Silicate	14.6:3/7	0.13 - 0.28
WS_2, graphite, Au	Sodium Silicate	14.6:1:5/5	0.11 - 0.21
WS_2, graphite, Au	Sodium Silicate	14.6:1:5/5	0.05 - 0.5+
WS_2, graphite, Au	Sodium Silicate	14.6:1:5/7	0.06 - 0.32
WS_2, graphite, Au	Sodium Silicate	14.6:1:5/7	0.11 - 0.23
WS_2, graphite, Au	Sodium Silicate	14.6:1:5/8.7	0.04 - 0.31
WS_2, graphite, Au	Sodium Silicate	14.6:1:5/8.7	0.10 - 0.5+

TABLE III (Continued)

Lubricant(s)	Binder	Lubricant/Binder Weight Ratio	Friction Coefficient Range
MoS_2, WS_2, graphite, Au	Sodium Silicate	7.5:3.65:1:5/7	0.11 - 0.37
MoS_2, WS_2, graphite, Au	Sodium Silicate	7.5:3.65:1:5/7	0.12 - 0.40
MoS_2, WS_2, graphite, Au	Sodium Silicate	2.5:10.95:1:5/7	0.09 - 0.30
MoS_2, WS_2, graphite, Au	Sodium Silicate	2.5:10.95:1:5/7	0.05 - 0.46
MoS_2, WS_2, graphite, Au	Sodium Silicate	5:7:1:5/7	0.08 - 0.40
MoS_2, WS_2, graphite, Au	Sodium Silicate	5:7:1:5/7	0.10 - 0.20
WSe_2	Sodium Silicate	17.3/8.7	0.27 - 0.5+
WSe_2	Sodium Silicate	17.3/8.7	0.18 - 0.5+
WSe_2	Sodium Silicate	17.3/7	0.05 - 0.31
WSe_2	Sodium Silicate	17.3/7	0.11 - 0.30
WSe_2	Sodium Silicate	17.3/6.2	0.18 - 0.40
WSe_2	Sodium Silicate	17.3/6.2	0.21 - 0.44
WSe_2, graphite, Au	Sodium Silicate	14.6:1:5/7	0.06 - 0.32
WSe_2, graphite, Au	Sodium Silicate	14:6:1:5/7	0.11 - 0.23
WSe_2, graphite, Au	Sodium Silicate	14.6:1:5/8.75	0.04 - 0.31
WSe_2, graphite, Au	Sodium Silicate	14.6:1:5/8.75	0.10 - 0.5+
WSe_2, graphite, Au	Sodium Silicate	17.3:1:5/5	0.10 - 0.30
WSe_2, graphite, Au	Sodium Silicate	17.3:1:5/5	0.10 - 0.39
WSe_2, graphite, Au	Sodium Silicate	17.3:1:5/9	0.13 - 0.26
WSe_2, graphite, Au	Sodium Silicate	17.3:1:5/9	0.10 - 0.5+
WSe_2, graphite, Au	Sodium Silicate	17.3:1:5/7	0.20 - 0.5+
WSe_2, graphite, Au	Sodium Silicate	17.3:1:5/7	0.10 - 0.31
Silver Bromate	Sodium Silicate	3/1	0.40 - 0.5+
Silver Bromate	Sodium Silicate	3/1	0.30 - 0.5+
MoS_2, graphite, Bi	Sodium Silicate	10:1:1/7	0.06 - 0.26
MoS_2, graphite, Bi	Sodium Silicate	10:1:1/7	0.07 - 0.17
MoS_2, graphite, Bi	Sodium Silicate	10:1:1/7	0.10 - 0.19
MoS_2, graphite, Bi	Sodium Silicate	10:1:1/7	0.09 - 0.21
MoS_2, graphite, Bi	Sodium Silicate	10:1:3/7	0.09 - 0.22
MoS_2, graphite, Bi	Sodium Silicate	10:1:3/7	0.10 - 0.26
MoS_2, graphite, Bi	Sodium Silicate	10:1:5/7	0.09 - 0.20
MoS_2, graphite, Bi	Sodium Silicate	10:1:5/7	0.08 - 0.23
MoS_2, graphite, Bi	Sodium Silicate	10:1:7/7	0.20 - 0.45
MoS_2, graphite, Bi	Sodium Silicate	10:1:7/7	0.09 - 0.26
MoS_2, graphite, Bi_2Te_3	Sodium Silicate	10:1:2/7	0.09 - 0.19
MoS_2, graphite, Bi_2Te_3	Sodium Silicate	10:1:2/7	0.09 - 0.24
MoS_2, graphite, Au	Kasil 88 + NaF	10:1:5/3.5	0.14 - 0.46
MoS_2, graphite, Au	Kasil 88 + NaF	10:1:5/3.5	0.14 - 0.28
MoS_2, graphite, Au	Kasil 88 + NaF	10:1:5/3.5	0.17 - 0.31

TABLE III (Concluded)

Lubricant(s)	Binder	Lubricant/Binder Weight Ratio	Friction Coefficient Range
MoS_2, graphite, Au	Kasil 88 + NaF	10:1:5/5.3	0.10 - 0.28
MoS_2, graphite, Au	Kasil 88 + NaF	10:1:5/5.3	0.17 - 0.29
MoS_2, graphite, Au	Kasil 88 + NaF	10:1:5/8.7	0.13 - 0.43
MoS_2, graphite, Au	Kasil 88 + NaF	10:1:5/8.7	0.17 - 0.36
MoS_2, graphite, Au	Kasil 88 + NaF	10:1:5/7	0.10 - 0.28
MoS_2, graphite, Au	Kasil 88 + NaF	10:1:5/7	0.11 - 0.26
MoS_2, graphite, Au	Kasil 88 + NaF	10:1:5/7	0.07 - 0.25
MoS_2, graphite, Au	Kasil 88 + NaF	10:1:5/7	0.13 - 0.26
MoS_2, graphite, Au	Kasil 88 + NaF	10:1:5/21	0.24 - 0.40
MoS_2, graphite, Au	Kasil 88 + NaF	10:1:5/21	0.25 - 0.5+

TABLE IV

FRICTION RESULTS FROM FRICTIONAL BEHAVIOR RUNS

Load - 50 gm/contact (2.2 psi) Speed - 900 rpm (765 fpm)

Wear Track Description

Material - 440 C Stainless Steel
Hardness - 55 to 59 Rockwell C
Roughness - 4 to 6 rms

Environmental Pressure (mm. Hg)	Wear Track Temperature (°F)	Friction Coefficient Range	
		MLF-5[a]	Modified MLF-5[b]
760	80	0.12 - 0.21	0.20 - 0.33
760	250	0.05 - 0.07	0.08 - 0.15
760	400	0.10 - 0.15	0.09 - 0.17
10^{-7}	80	0.07 - 0.10	0.09 - 0.15
10^{-7}	250	0.09 - 0.10	0.08 - 0.16
10^{-7}	400	0.04 - 0.14	0.09 - 0.11

a/ MLF-5:MoS_2 + graphite + Au/sodium silicate.
b/ Modified MLF-5:MoS_2 + graphite + Au/Kasil 88 + NaF.

TABLE V

WEAR-LIFE INVESTIGATION RESULTS FOR MLF-5

Load - 300 gm/contact (13.5 psi) Speed - 900 rpm (765 fpm)
Temperature - 80°F Atmosphere - normal room air

Wear Track Description

Material - 440 C stainless steel
Hardness - 55 to 59 Rockwell C
Roughness - 4 to 6 rms

Run No.	Film Thickness (in.)	Wear-Life (hr.)	Wear-Life (hr/in x 10^4)	Feet Rubbed x 10^4
1	0.0004	49.7	(12.4)	228
2	0.0003	21.5	(7.1)	98
3	0.0003	26.0	(8.6)	119
4	0.0003	20.5	(6.8)	94
5	0.0007	17.5	(2.5)	80
6	0.0003	43.0	(14.3)	197
7	0.0005	216	(43.1)	991
8	0.0007	26.5	(3.8)	122
9	0.0004	22.0	(5.5)	101
10	0.0003	42.5	(14.2)	195
11	0.0005	60.0	(12.0)	275
12	0.0011	184.8	(16.8)	845
13	0.0009	106.2	(11.8)	487
14	0.0009	79.3	(8.8)	364
15	0.0007	65.9	(9.4)	302
16	0.0010	88.9	(8.9)	408
17	0.0010	49.2	(4.9)	226
18	0.0008	38.2	(4.8)	175
19	0.0010	125.2	(12.5)	575
20	0.0010	115.4	(11.5)	529
21	0.0009	19.9	(2.2)	91
22	0.0007	22.2	(3.2)	102
23	0.0006	34.2	(5.7)	157
24	0.0008	133.2	(16.6)	611
25	0.0007	16.7	(2.4)	76
26	0.0007	17.0	(2.4)	78
27	0.0006	52.4	(8.9)	240
28	0.0008	8.5	(1.6)	39
29	0.0007	17.0	(2.4)	78
30	0.0007	117.0	(16.7)	537

TABLE VI

WEAR-LIFE INVESTIGATION RESULTS FOR MODIFIED MLF-5
(MoS_2, Graphite, Au/Kasil 88 + NaF)

Load - 300 gm/contact
Wear-track temperature - 80°F
Speed - 900 rpm
Atmosphere - air

Wear Track Description

Material - 440 C Stainless Steel
Hardness - 55 to 59 Rockwell C
Roughness - 4 to 6 rms

Run No.	Film Thickness (in.)	Wear-Life (hr.)	Wear-Life (hr/in x 10^4)	Feet Rubbed x 10^4
1	0.0010	34.7	(3.5)	159
2	0.0008	67.7	(8.5)	311
3	0.0012	106.4	(8.8)	488
4	0.0010	125.2	(12.5)	575
5	0.0008	77.9	(9.7)	357
6	0.0005	59.6	(11.9)	273
7	0.0007	54.5	(7.8)	250
8	0.0011	319.0	(20.9)	1,464
9	0.0009	66.1	(7.3)	303
10	0.0009	109.0	(12.1)	500
11	0.0007	36.1	(3.7)	166
12	0.0006	19.8	(3.3)	91
13	0.0009	26	(2.9)	119
14	0.0003	98	(33)	450

TABLE VII

SOLID LUBRICANT COATED ITEMS

Part	Quantity	Lubricant Applied	Destination
Hold Down Specimens	20	MLF-5	MSFC, NASA
Hold Down Specimens	6	(MoS_2, Gr, Au/Kasil 88 + NaF)	MSFC, NASA
Ball Retainers	20	MLF-5	MSFC, NASA
Test Bushings	4	MLF-5	Rocketdyne
Test Shafts	4	MLF-5	Rocketdyne
Bearing Races	4	MLF-5	Pratt & Whitney
Test Discs	4	MLF-5	Rocketdyne
Falex Pins	2	MLF-5	Rocketdyne
Falex Blocks	4	MLF-5	Rocketdyne
Bearing Races	24	MLF-5	Miniature Precision Brgs.
Ball Retainers	72	MLF-5	Mineature Precision Brgs.
Test Plates	3	MLF-5	Boeing
Test Cups	3	MLF-5	Boeing

TABLE VIII

FRICTION RESULTS FOR LUBRICANT FILMS AFTER RP-1 CONTAMINATION

Load - 50 gm/contact (2.2 psi) Speed - 900 rpm (765 fpm)

Wear Track Description

Material - 440 C Stainless Steel
Hardness - 59 Rockwell C
Roughness - 4 to 6 rms
Initial Film Thickness - 0.00075 in.

Elapsed Running Time (min.)	Wear Track Temperature (°F)	Commercial Film		MLF-5	
		Friction Coefficient	Film Wear After 3 hr. (in.)	Friction Coefficient	Film Wear After 3 hr. (in.)
0-60	90	0.17-0.29		0.11-0.19	
60-120	90-400	0.05-0.23		0.13-0.19	
120-150	400	0.08-0.16		0.14-0.16	
150-180	400-150	0.07-0.11	0.0002	0.11-0.14	0.0002

TABLE IX

MULTISTATION VACUUM SYSTEM REQUIREMENTS

Experiment Conditions	Bearing Type		
	Ball	Journal	Spherical
Bearing size*	Bearing R-4 1/4 in. bore x 5/8 in. O.D.	Bearing 1 in. bore or less	Bearing 1 in. bore or less
Motion	Rotary	Rotary and oscillatory	Rotary and oscillatory
Speed, rpm	3,000 to 20,000**	2 to 3,000 and 2 to 250 cpm	2 to 3,000 and 2 to 250 cpm
Load	3 lb. thrust	50,000 psi (projected area)	50,000 psi (proected area)
Temperature, °F	-320* to 1,000	-320* to 1,000	-320* to 1,000
Ambient pressure, Torr	760 to 10^{-9}***	760 to 10^{-9}***	760 to 10^{-9}***
Lubricant	Solid Film	Solid film	Solid film

* Approximate.

** Cooled with liquid nitrogen.

*** The ultimate low pressure will probably be higher than 10^{-9} Torr most of the time in each station.