N64 28892
(ACCESSION NUMBER)
121
(PAGES)
CR 54591
(NASA CR OR TMX OR AD NUMBER)
(THRU)
1
(CODE)
23
(CATEGORY)
FACILITY FORM 602

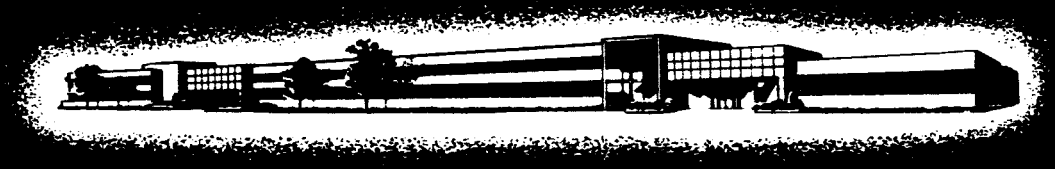

TEXAS INSTRUMENTS INCORPORATED

REPRODUCED BY
NATIONAL TECHNICAL
INFORMATION SERVICE
U. S. DEPARTMENT OF COMMERCE
SPRINGFIELD, VA. 22161

115 pp

R68-20276

# HANDBOOK
# OF DEFINITIONS, TERMS, FORMULAS, CONVERSION TABLES, AND MEASUREMENT METHODS FOR MAGNETIC PHENOMENA

By

Kenneth S. Goldstein
and
Grant R. Gray

2-61042-2

31 December 1963

Prepared for
Jet Propulsion Laboratories
California Institute of Technology
Pasadena, California
Under Contract No. BE4-217626

TEXAS INSTRUMENTS INCORPORATED
Apparatus Division
6000 Lemmon Avenue

TABLE OF CONTENTS


| Section | Title | Page |
|---|---|---|
| I | ORIGIN OF MAGNETIC EFFECTS | 1-1 |
| | A. Introduction | 1-1 |
| | B. Field and Flux Density | 1-1 |
| | C. Magnetic Effects in Materials | 1-2 |
| | D. Magnetization | 1-3 |
| | E. Magnetized Material | 1-5 |
| | F. The Dipole Field | 1-7 |
| | G. Sources of Dipole Moment | 1-7 |
| | H. Magnetic Shielding | 1-11 |
| | I. Demagnetization | 1-15 |
| | J. The Inverse-Cube Relationship | 1-16 |
| II | GLOSSARY | 2-1 |
| | A. Introduction | 2-1 |
| | B. Index | 2-1 |
| | C. Definitions | 2-9 |
| | D. Symbols | 2-42 |
| III | UNIT CONVERSION TABLES | 3-1 |
| | A. Introduction | 3-1 |
| | B. Historical Development of Units Systems | 3-1 |
| | C. Use of the Conversion Tables | 3-4 |
| IV | FORMULAS | 4-1 |
| | A. Index | 4-2 |
| | B. Area, Effective | 4-3 |
| | C. Dipole Moment | 4-4 |
| | D. Induced Electromotive Force | 4-6 |
| | E. Flux Density | 4-7 |
| | F. Gradient, Dipole Field | 4-14 |
| | G. Magnetization | 4-16 |
| | H. Pole Strength | 4-17 |
| | I. Right-Hand Rule | [illegible] |
| | J. Example No. 1 | 4-19 |
| | K. Example No. 2 | [illegible] |
| V | MEASUREMENT METHODS | 5-1 |
| | A. Introduction | [illegible] |


Preceding page blank

TABLE OF CONTENTS (Continued)


| Section | Title | Page |
|---|---|---|
| | C. Measurement of Electronic Component Magnetism | 5-7 |
| | D. Indirect Measurements | 5-11 |
| VI | REFERENCES | 6-1 |


LIST OF ILLUSTRATIONS


| Figure | Title | Page |
|---|---|---|
| 1-1 | Magnetic Field of Bar Magnet | 1-2 |
| 1-2 | Visualization of a Bar Magnet as a Composite of Many Small Magnets | 1-6 |
| 1-3 | Electron Currents in a Bar Magnet | 1-6 |
| 1-4 | Electron Current Cancellation in a Magnet | 1-7 |
| 1-5 | Effect of a Ferromagnetic Material in a Magnetic Field | 1-11 |
| 1-6 | Correct Magnetic Shielding | 1-12 |
| 1-7 | Incorrect Magnetic Shielding | 1-12 |
| 1-8 | Magnetic Compensation | 1-13 |
| 1-9 | Permeability Curve | 1-14 |
| 1-10 | Derivation of Inverse Cube Relationship for Field of a Bar Magnet | 1-17 |
| 2-1 | Favorable and Unfavorable Calibration Positions | 2-10 |
| 2-2 | Dip Angle | 2-13 |
| 2-3 | Domains | 2-14 |
| 2-4 | Illustration of Lenz' Law | 2-16 |
| 2-5 | Fanselau Coils, Side View | 2-17 |
| 2-6 | Helmholtz Coils, Side View | 2-19 |
| 2-7 | Magnetic Flux Through an Arbitrary Area | 2-23 |
| 2-8 | Magnetic Poles of a Bar Magnet | 2-32 |
| 2-9 | Pole Strength of a Bar Magnet | 2-33 |
| 2-10 | Toroid, Circular Cross Section | 2-40 |
| 2-11 | Magnetization Curves and Hysteresis Loops | 2-41 |
| 4-1 | Current Convention | 4-1 |
| 4-2 | Circular Coil | 4-2 |
| 4-3 | Rectangular Coil | 4-4 |
| 4-4 | Dipole Moment of Circular Plate Rotating in a Magnetic Field | 4-5 |
| 4-5 | Dipole Moment of a Cylindrical Magnet | 4-6 |
| 4-6 | Rotating Coil | 4-6 |
| 4-7 | Fixed Coil in Varying Field | [illegible] |

LIST OF ILLUSTRATIONS (Continued)


| Figure | Title | Page |
|---|---|---|
| 4-8 | Single Coil | 4-8 |
| 4-9 | Helmholtz Coils | 4-8 |
| 4-10 | Fanselau Coil, Side View | 4-9 |
| 4-11 | Dipole Field | 4-10 |
| 4-12 | Solenoidal Field | 4-12 |
| 4-13 | Field of a Straight Conductor | 4-13 |
| 4-14 | Field of an Arbitrary Conductor | 4-13 |
| 4-15 | Dipole Field Gradient | 4-14 |
| 4-16 | Magnetization of a Cylindrical Magnet | 4-16 |
| 4-17 | Pole Strength of a Cylindrical Magnet | 4-17 |
| 4-18 | Right-Hand Rule for a Current Carrying Wire | 4-18 |
| 4-19 | Right-Hand Rule for a Coil | 4-18 |
| 4-20 | Helmholtz Coil Compensating System | 4-22 |
| 4-21 | Calibration and Measurement Arrangement Showing Unfavorable Position | 4-23 |
| 5-1 | Astatic Magnetometer | 5-4 |
| 5-2 | Component Measurement Test Setup | 5-8 |

# FOREWORD

An increasing number of space probes will carry highly sensitive magnetometers to measure the magnetic fields of planets and interplanetary space. To permit high magnetometer sensitivity, the spacecraft must be relatively nonmagnetic, or magnetically "clean." Magnetic cleanliness of spacecraft will require nonmagnetic electronic components of all types. However, an understanding of magnetic phenomena is necessary to properly understand the requirements for these components.

Eventually, preferred parts lists of nonmagnetic components will be compiled so that circuit designers can use them when developing hardware for spacecraft.

An attempt has been made to clear up ambiguities in definitions and units and explain the origin of some of the magnetic effects the designer must consider. It is hoped that this handbook will aid those working in the area of nonmagnetic components and circuits to better understand the problems and terminology involved.

Preceding page blank

TEXAS INSTRUMENTS INCORPORATED
[illegible]
P.O. Box [illegible]
Dallas 22, Texas

# HANDBOOK OF DEFINITIONS, TERMS, FORMULAS, CONVERSION TABLES, AND MEASUREMENT METHODS FOR MAGNETIC PHENOMENA

2-[illegible]

## SECTION I

## ORIGIN OF MAGNETIC EFFECTS

### A. INTRODUCTION

Electrostatic and magnetic effects have been known since ancient times, but quantitative study did not begin until 1785, when Coulomb found that the forces between magnetic poles obey an inverse-square relationship as do the forces between electrical charges. This suggested a similarity between electrical and magnetic effects. However, experimenters soon found that magnetic "charges" or poles, could not be isolated as could electrical charges. That is, for every + (North) pole there was always associated a − (South) pole. Then in 1820 Oersted found that a current-carrying wire would cause the deflection of a nearby compass needle. Since then it has become generally accepted that all magnetic effects arise from the motion of electrical charge or current flow, rather than from magnetic "charges". Even an electron spinning on its axis produces a magnetic field. Later we shall see that electron spin is responsible for permanent magnetism.

### B. FIELD AND FLUX DENSITY

The fact that a compass needle is deflected in a certain direction by a current carrying wire suggests that magnetic quantities have direction. This may be verified by the simple experiment of laying a sheet of paper over a bar magnet and sprinkling iron filings on the paper. The filings arrange themselves in definite lines indicating directions or lines of force. This experiment helps to visualize a magnetic field as lines of equal force or strength. These lines of force (flux) are densest at the poles of the magnet where it is known that magnetic forces are strongest. It is reasonable, then, that magnetic effects may be quantitatively expressed in terms of the density of these flux lines, or flux lines per unit area. This quantity, den[illegible]

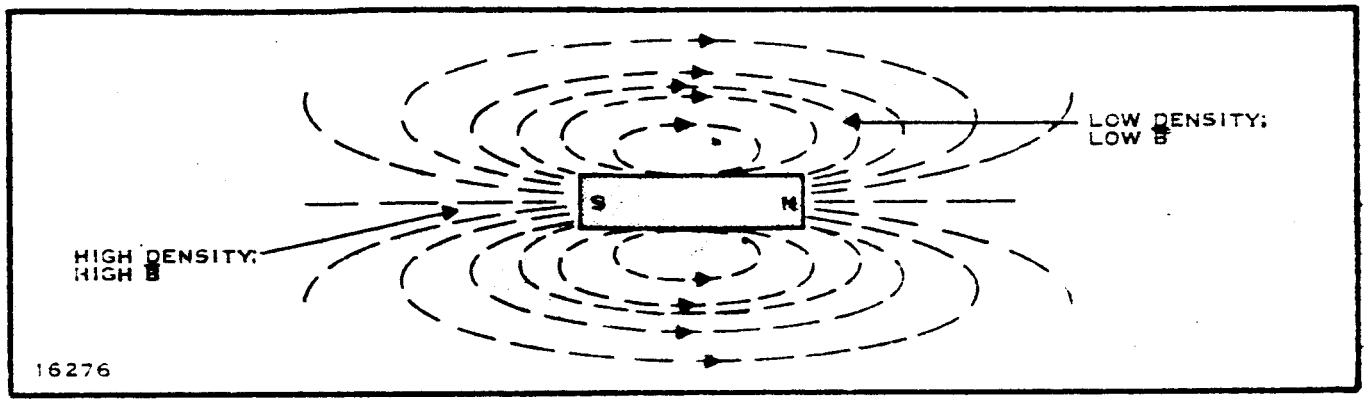


Figure 1-1. Magnetic Field of Bar Magnet

by $\bar{B}$*, is called the flux density of the magnetic field. Figure 1-1 shows such a field around a bar magnet.

Experiments have shown that magnetic flux lines are closed, continuous lines; that is, they do not begin and end on magnetic "charges." This explains why it is impossible to isolate magnetic poles.

When studying magnetic effects in materials, it is necessary to distinguish between magnetic flux density and magnetic field. The flux density $\bar{B}$ refers to the total magnetic effect. The magnetic field, denoted by $\bar{H}$ could more properly be called the magnetizing field. In free space these two quantities describe the same effect and differ only by a constant $\mu_o$, the permeability of free space,** which depends upon the units system being used. So, for free space, the following equation holds:

$$\bar{B} = \mu_o \bar{H} .$$

As $\bar{H}$ increases, $\bar{B}$ increases proportionally. The importance of this distinction will be seen later.

## C. MAGNETIC EFFECTS IN MATERIALS

Let us now take a close look at a piece of material. The material is composed of a large number of atoms; each atom is composed of a nucleus with orbiting electrons. Since electrons have charge and since magnetic effects arise from a moving charge, electrons should set up a small magnetic field due to their orbital motion. This is exactly what happens. This circulation of charge is called a magnetic dipole, and its strength and direction

*For those not familiar with vector notation, the overscore above a quantity simply means that the quantity has both direction and magnitude.

**$\mu_o = 4\pi \times 10^{-7}$ henrys/meter (RMKS)
$= 1$ (CGS-EMU)

is measured in terms of magnetic dipole moment. In fact, every electron is known to spin about its axis (assuming electrons to be spherical). This means that the charge distributed about the surface of the electron is also circulating about the electron axis. So this too sets up a magnetic dipole. In some materials the field due to electron spin is much stronger than that due to the electron orbital motion.

Magnetically, there are three basic arrangements an atom may have. The first, and simplest, is that in which the atom has an even number of electrons orbiting about the nucleus. The electrons tend to arrange their orbits so that their magnetic fields cancel; that is, for every electron orbiting in one direction, there is another orbiting in the other direction. This cancelling effect also holds for electron spins. When a magnetizing field is applied to such an atom the electron orbits are distorted [illegible] a net dipole moment which opposes the applied, or magnetizing, field. Thus, the total number of flux lines through the atom is reduced. This effect occurs in all materials to some degree, but may be cancelled by other effects to be explained later. A material with the atomic structure above for which this flux reduction may be seen is called a diamagnetic material.

The second case is that in which the atom has an odd number of orbiting electrons. There is always one uncancelled electron orbit and an uncancelled electron spin. The dipoles set up by the uncancelled orbits and spins are randomly aligned in the absence of a magnetizing field, so the net magnetic field due to these dipoles is zero.

When a magnetizing field is applied, the dipoles tend to line up with the field just as a compass needle (also a dipole) lines up with the earth's field. In this case the atomic dipoles add to the applied field, thus increasing the number of flux lines through the atom. Such atoms make up paramagnetic materials.

The third case is a modification of the second case. In some materials, the atoms prefer an arrangement [illegible] spins. Such an atom will have a large [illegible] magnetizing field. Materials [illegible] magnetic materials. Three elements are ferromagnetic [illegible] and cobalt. Many alloys and mixtures containing these elements are also ferromagnetic.

## D. MAGNETIZATION

The quantities flux density $\bar{B}$, and magnetic field $\bar{H}$ are sufficient to describe any magnetic effect, if one has a large enough adding machine. In practice it is impossible to add up the contributions due to individual atoms for some $10^{30}$ atoms, so we introduce a new quantity $\bar{M}$, the magnetization of a material which is defined as the vector sum of all the atomic dipole moments per unit volume. Flux density, $\bar{B}$, magnetizing field $\bar{H}$, and magnetization $\bar{M}$ are related by

$$\bar{B} = \mu_o (\bar{H} + \bar{M}) \quad \text{(inside a material)}$$

where k is a constant which depends upon the units system used. In the rationalized mks (RMKS) system, $k = 1$; in the CGS electromagnetic unit (CGS-EMU) system, $k = 4\pi$. We may now describe the total magnetic effect, the flux density, in terms of a magnetizing field and the contributions due to the presence of material. Note that $\bar{M} = 0$ in free space.

In paramagnetic and diamagnetic materials, the atomic dipoles are held in certain directions in the crystal lattice of the material which they make up. When a magnetic field is applied, the degree to which the atomic dipoles line up with (or against, for diamagnetic materials) the applied field depends upon the strength of the applied field. The greater $\bar{H}$ is, the more nearly aligned the dipoles are and the greater $\bar{M}$ is. In this case, for paramagnetic and diamagnetic materials, $\bar{M}$ is proportional to $\bar{H}$ with a constant of proportionality $\chi_m$, called the magnetic susceptibility of the material. So

$$\bar{M} = \chi_m \bar{H}.$$

Substituting this into the equation for the total magnetic flux density,

$$\bar{B} = \mu_o(\bar{H} + k\bar{M}),$$

yields

$$\bar{B} = \mu_o(\bar{H} + k\chi_m\bar{H}) = \mu_o\bar{H}(1 + k\chi_m).$$

The quantity $(1 + k\chi_m)$ is called the relative permeability of the material, $k_m$. The quantity, $\mu_o(1 + k\chi_m)$ is defined as the permeability of the material, $\mu$. For a given material, therefore

$$\bar{B} = \mu\bar{H}$$

where

$$\mu = k_m\mu_o = \mu_o(1 + k\chi_m).$$

In other words, if a material of known permeability is placed in a magnetic field of known strength and direction, the flux density at any point in the material may be determined. When $\bar{H}$ is reduced to zero, the atomic dipoles return to their arbitrary alignment and the flux density disappears.

In ferromagnetic materials, the situation is not so easily analyzed since $\mu$ is not constant. Rather, $\mu$ is a many-valued function dependent on the previous history of the material. In ferromagnetic materials, the atoms form groups, called domains. Inside a domain, most of the atomic dipoles are aligned parallel to one another. When a magnetic field is applied, these domains tend to reorient themselves parallel to the field. They do this suddenly so that the flux density through the material increases in discrete steps. This is known as the Barkhausen effect. Unlike paramagnetic and diamagnetic materials, many of the domains may retain their alignment so that even when the applied field ($\bar{H}$) is removed, a flux density will remain in the material.

due to the domain orientation. This flux density is called the residual flux density or residual induction ($B_r$). If the applied field is sufficiently strong to saturate the material, the value of residual flux density remaining when the field is removed is called the retentivity ($B_{rs}$). The corresponding residual magnetization after the field is removed is called the remanence, $M_{rs}$, where

$$M_{rs} = \frac{B_{rs}}{\mu_o k} .$$

(See also Section II, Glossary.)

To illustrate the magnitude of ferromagnetic effects, imagine a region of space with an applied magnetic field intensity $\bar{H}$ and a corresponding flux density $\bar{B} = \mu\bar{H}$. If this space is now filled with iron while maintaining the same field $\bar{H}$, the flux density $\bar{B}$ will be several thousand times as great as in the case for free space. If the space were filled with a paramagnetic substance (such as aluminum), the flux density would increase by a factor of less than two.

## E. MAGNETIZED MATERIAL

A magnetized bar may be imagined to be constructed of a large number of tiny magnets, each with a + (North) and a – (South) pole. These are arranged end to end so that + and – poles cancel within the bar but not at the ends. This orientation is shown in Figure 1-2.

If magnetic effects within the bar are of no concern, the total bar may be imagined as being two opposite magnetic "charges," or poles separated by the length of the bar. This is closely analogous to the concept of an electric dipole which consists of two opposite electrical charges separated by a certain distance. The magnetized bar may also be classed as a dipole.

If the magnetization of the bar is known, then the dipole moment per unit volume of the bar is known by the definition of magnetization. So multiplying the magnetization $\bar{M}$ of the bar by the volume V of the bar will give the total dipole moment $\bar{m}$ of the bar. This

$$\bar{M}V = \bar{m}.$$

But the volume of the bar is simply the area of an end of the bar, A, times the length of the bar, L, so

$$\bar{m} = \bar{M}AL.$$

If the quantity $|\bar{M}|$ A is defined as the pole strength of the bar, $m_p$ (so that $m_p = |\bar{M}|$ A) then the magnitude of the dipole moment of the bar $|\bar{m}|$, becomes

$$|\bar{m}| = m_p L.$$

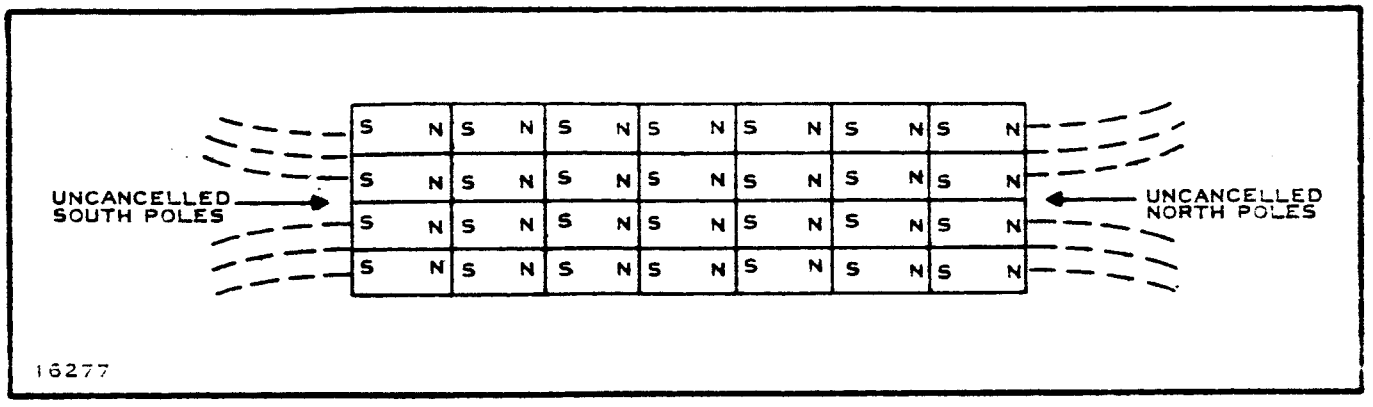


Figure 1-2. Visualization of a Bar Magnet as a Composite of Many Small Magnets

which is the classical way of expressing dipole moment in terms of equal charges separated by a certain distance. Commercial magnets are rated either in terms of pole strength or dipole moment. The equation above may be used to convert between the two.

There is another way of looking at a magnetized bar. We saw earlier that spinning electrons give rise to dipole moment. Consider the cross section of a magnetized bar, Figure 1-3.

The electron spins are the equivalent of tiny current loops. These loops are very densely packed in the material and almost all the currents circulate in the same direction. Inside the bar these current loops are cancelled by adjacent current loops as in Figure 1-4.

However, on the surface of the bar the currents are not cancelled. This results in a net current flow around the surface of the bar. Such currents are called Amperian currents. This net circulation of current gives rise, of course, to the dipole moment of the magnetized bar.

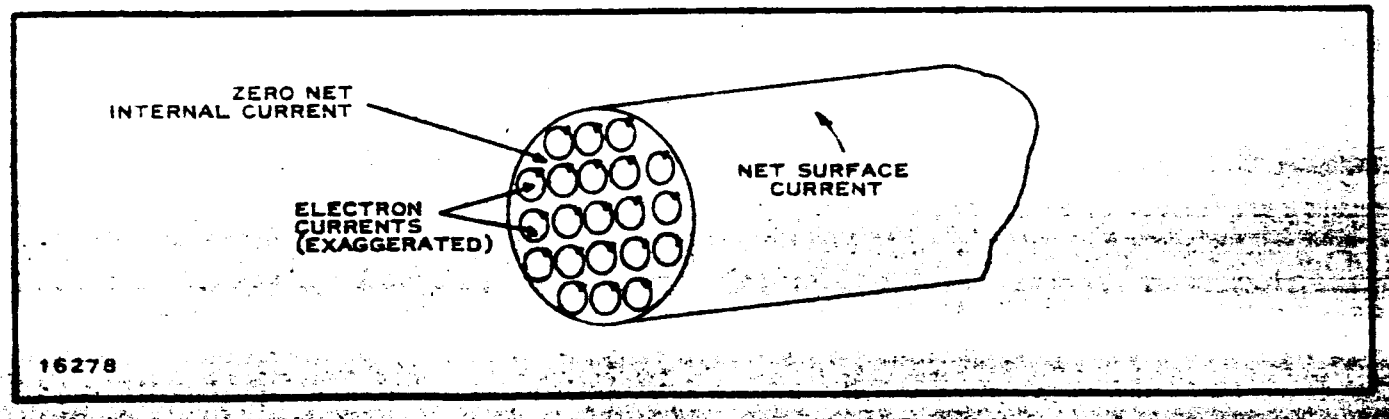


Figure 1-3. Electron Currents in a Bar Magnet

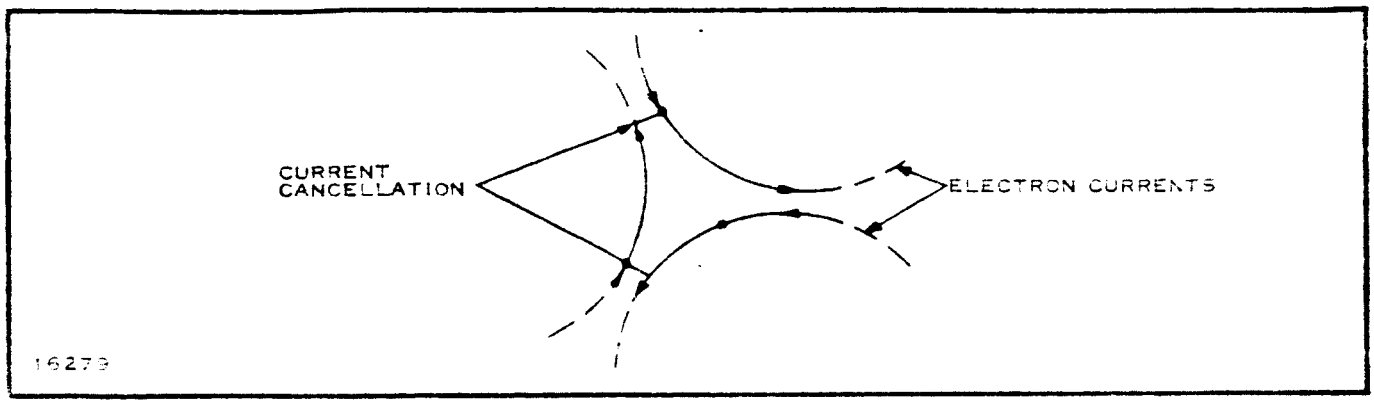


Figure 1-4. Electron Current Cancellation in a Magnet

## F. THE DIPOLE FIELD

A dipole produces a magnetic field which depends upon distance from the dipole and orientation with respect to the dipole. This is difficult to compute close to the dipole, but for distances greater than about three times the length of the dipole, the equations for the dipole field reduce to a fairly simple form (Section III, Formulas, "Flux Density, Dipole"). The important feature of these equations is that the flux density $\bar{B}$ due to the dipole is inversely proportional to the cube of the distance r from the dipole; i.e.

$$|\bar{B}| = K \frac{|\bar{m}|}{r^3}$$

where K depends upon the orientation of the dipole and the units system used.

A current carrying coil has a circulating current and may also be classed as a dipole. Its dipole moment may be simply calculated (Section III, "Dipole Moment, Coil") and the field equations for distances greater than three times the largest dimension of the coil become identical to those for the magnetized bar. The field due to any current carrying wire may be calculated by the Biot-Savart Law (Section III), but this becomes quite involved for all but simple arrangements.

## G. SOURCES OF DIPOLE MOMENT

It was said earlier that the dipole moment of a sample of material is determined by the alignment of the atomic dipoles within the sample. Whether there is a net moment in the absence of a magnetizing field is dependent upon the atomic and crystal structure of the material. Until now, only permanent moments have been considered.

### 1. Induced Moments

Knowing the basic mechanism behind magnetization, it is not hard to see that any material in a magnetizing field will possess, to some extent,

a dipole moment. For very weak diamagnetic and paramagnetic materials this moment is detectable only with delicate instruments, even in strong magnetic fields. For strongly paramagnetic, and for ferromagnetic materials this induced dipole moment is larger. As was seen in the discussion on magnetic shielding, such induced moments can distort the field around the dipole. If these induced moments are in close proximity to a magnetic field measuring device such as a magnetometer, the distortions in the field may cause the device to give quite erroneous readings. It is advisable, therefore, to place only materials known to be weak paramagnetic or diamagnetic close to the sensor. Electronic components which have been labelled with ink, the pigment for which was ground in a steel ball mill, have been known to seriously affect sensitive magnetometers.

2. Eddy Currents

Another source of magnetic moment arises from so-called eddy currents. These are currents which circulate through a conductor when the conductor is moved in a magnetic field. Eddy currents arise in the following way:

When the total amount of flux through a circuit changes with time, an electromotive force, or potential is induced in the circuit. This potential will set up a current which will tend to oppose the change in flux (Lenz's law). A conducting material in any form may be considered to be made up of a large number of such circuits. When the material is placed in a magnetic field and the field varies or the material is rotated or moved to a region of higher or lower field, eddy currents are induced in the material. Under certain circumstances the moments produced by these currents may be large enough to affect measurements of a magnetic field. The current in transformers and electric motors cause power losses due to ohmic ($I^2R$) heating. In such cases, eddy current effects are reduced by dividing the magnetic "circuit" into small sections, as in laminated transformer cores, or by actually powdering the core material, as in ferrite core radio-frequency chokes.

3. Thermoelectric Effects

In addition to the processes previously described, magnetic fields will also be produced by currents set up in electrical conductors due to temperature gradients in the material.

If a temperature gradient is established across a piece of material, electrons at the hot end will diffuse more readily than those at the cold end. The electrons at the hot end will therefore become more agitated, and there will be a net flow of "hot" electrons toward the cold end of the material. This is a flow of electrical current which would be maintained indefinitely if the piece of material under consideration were not electrically insulated. In this case, the initial current produces a pileup of electrons at one end, causing a back emf which prevents a further flow of charge. Thus, under the influence of a temperature gradient, there exists a tendency for current to flow which, in an open circuit or insulated section, is balanced by the back emf.

If, however, two dissimilar metals are joined to form a closed current path and the two junctions are maintained at different temperatures, a voltage will be developed (and a current produced) due to the above process of electron flow. This phenomenon is known as the Seebeck effect and forms the basis for commonly used thermocouples. It should also be noted that thermocouple currents can be produced in a supposedly "pure" material if, in fact, the material contains inhomogeneities or inclusions of another metal.

The strength of the magnetic field produced depends on the magnitude of the temperature gradient, work functions of the metals involved, conductivity of the metals, and the area enclosed in the plane of the current path. Magnetic fields produced by the Seebeck effect are generally quite small. However, they may be detected by a sensitive magnetometer.

4. Current Loops

An important and frequently overlooked source of dipole moment is current flowing in a loop of wire. Fields due to current loops can greatly affect the performance of complex systems in which low magnetic fields must be measured. In such systems, it is necessary to give special consideration to the elimination or reduction of current loops in chassis wiring and power cabling.

For a single-turn loop of wire of radius r carrying a current I, the magnitude of the flux density at a point on the axis of the loop is given by

$$|\bar{B}| = \frac{\mu_0}{2} I \frac{A}{(r^2 + b^2)^{3/2}}$$

where

$\mu_0$ = permeability of free space

$A$ = area of the loop = $\pi r^2$

$b$ = distance from the plane of the loop to the point at which $\bar{B}$ is computed.

It can readily be seen that the flux density due to a current-carrying loop is directly proportional to the area of the loop and the amplitude of the current. At distances greater than approximately three times the radius of the loop, the flux density is inversely proportional to the cube of the separation, b. For example, assume that 50 milliamperes flow in a single turn loop whose diameter is 20 inches. At a point on the axis of the three feet from the center of the loop, the flux density can be found from Equation D-1-2 (Section III, Formulas).

$$|\bar{B}| = 7.88 \times 10^3 \frac{n I A}{(r^2 + b^2)^{3/2}} \quad \text{(gammas)}$$

where

$n = 1$ turn

$I = 50$ ma $= 5 \times 10^{-2}$ ampere

$r = 10$ inches

$b = 36$ inches

$A = \pi r^2 = 314$ sq. in.

$$|\bar{B}| = \frac{(7.88 \times 10^3)(1)(5 \times 10^{-2})(3.14 \times 10^2)}{(100 + 1296)^{3/2}}$$

$$|\bar{B}| = 2.37 \text{ gammas.}$$

A flux density of this magnitude could not be tolerated in the vicinity of a sensitive magnetometer. To reduce the effect of a current loop, the designer may take one or more approaches. The magnetic flux density may be reduced by reducing the current in the wire: this is usually impractical, as the electrical requirements of the system tend to set the current level. The magnetic flux density may also be reduced by rerouting the offending loop to increase the separation between the loop and the sensor; this is one of the most effective methods, since the flux density decreases approximately as the cube of the distance. Unfortunately, however, system mechanical considerations frequently eliminate this approach.

If the designer wishes to reduce the effect of a current-carrying loop, therefore, he must reduce the area enclosed by the loop. This may be done by cabling the current-carrying conductor adjacent to its ground return. An even more effective method is to twist the current-carrying conductor with the wire carrying its ground return current. Twisting effectively reduces one large loop to a multitude of small loops whose magnetic fields tend to cancel.

It may seem that an obvious solution has been overlooked, that of shielding the current-carrying conductor. This is not as simple a matter as it may first appear. A distinction should be made at this point between electrostatic and magnetic shielding. An electromagnetic field may be represented by an electric field intensity vector ($\bar{E}$) and a mutually perpendicular magnetic field intensity vector ($\bar{H}$). The magnitude of the electrostatic ($\bar{E}$) field capacitively coupled to adjacent circuitry may be reduced by the use of an electrically conductive shield such as copper braid. In order to reduce the magnetic ($\bar{H}$) field inductively produced by a current-carrying conductor, it would be necessary to shield the wire with a high permeability ferromagnetic material. Copper braid and enclosures which perform well as electrostatic shields would be totally useless as magnetic shields, since the permeability of copper is only slightly greater than that of air. Complete electromagnetic shielding requirements are more severe since they demand both effective

electrostatic and magnetic shield. The problem of magnetic shielding is discussed in detail in the next section.

## H. MAGNETIC SHIELDING

In some instances it is possible to shield a given volume from an ambient magnetic field by using high permeability ferromagnetic alloys of iron, nickel, and cobalt. Mumetal, an alloy of approximately 78 percent nickel, 13 percent iron, 4 percent molybdenum and 5 percent copper, is an example of such a material.

To see how this shielding effect takes place, consider first a volume of free space in which there exists a magnetizing field $H_1$. The flux density $B_1$ corresponding to this field will be $B_1 = \mu_0 H_1$. If a small bar of high permeability ferromagnetic material is now introduced into this space, the flux density through the volume occupied by the bar will be increased greatly and the bar will be magnetized. Apparent poles will be formed at the ends of the bar and the bar will set up its own field.

As shown in Figure 1-5(a), the flux lines due to the bar aid the ambient flux lines at points near the axis of the bar, but oppose the ambient flux lines at points off the axis of the bar. Since flux densities may be added vectorially, the final picture of the distribution of flux lines around the bar will appear as shown in Figure 1-5(b).

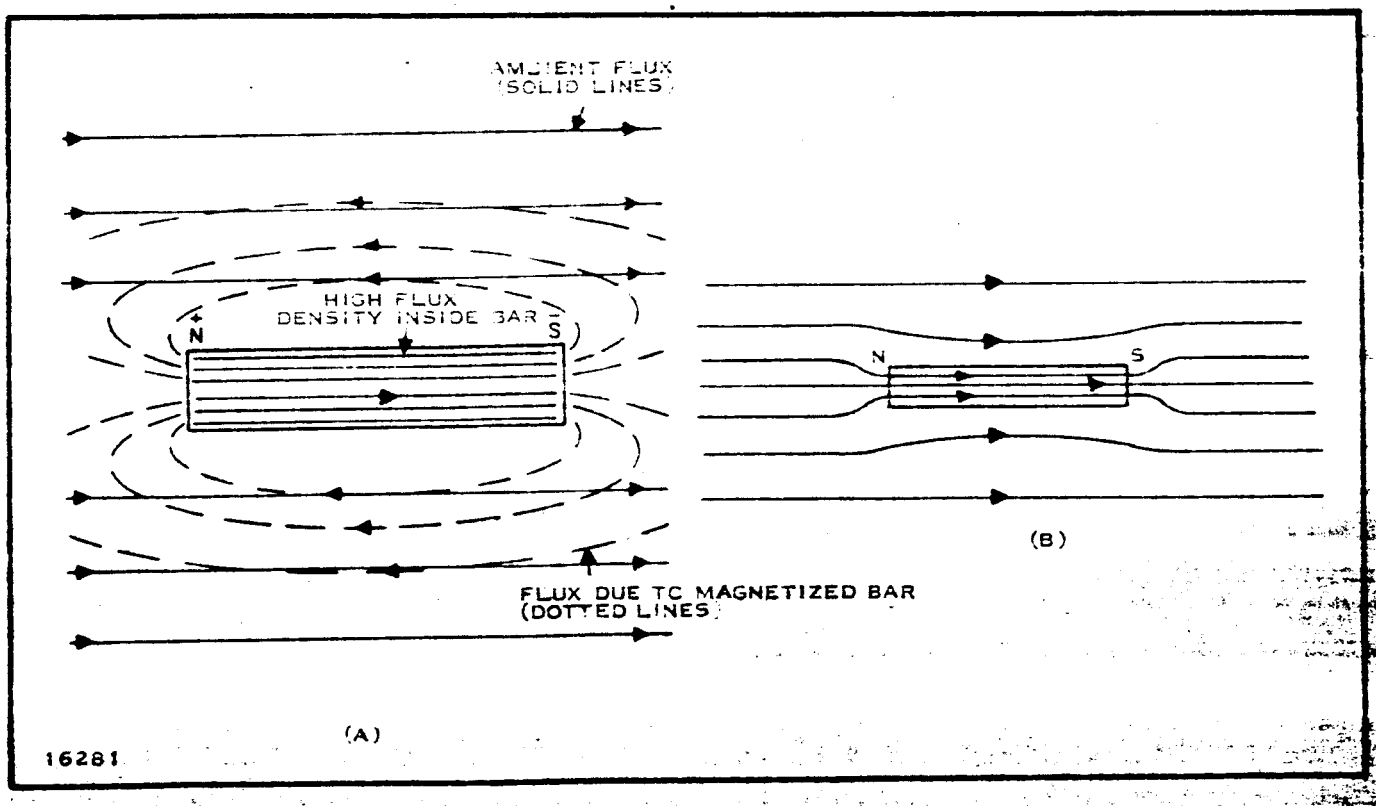


Figure 1-5. Effect of a Ferromagnetic Material in a Magnetic Field

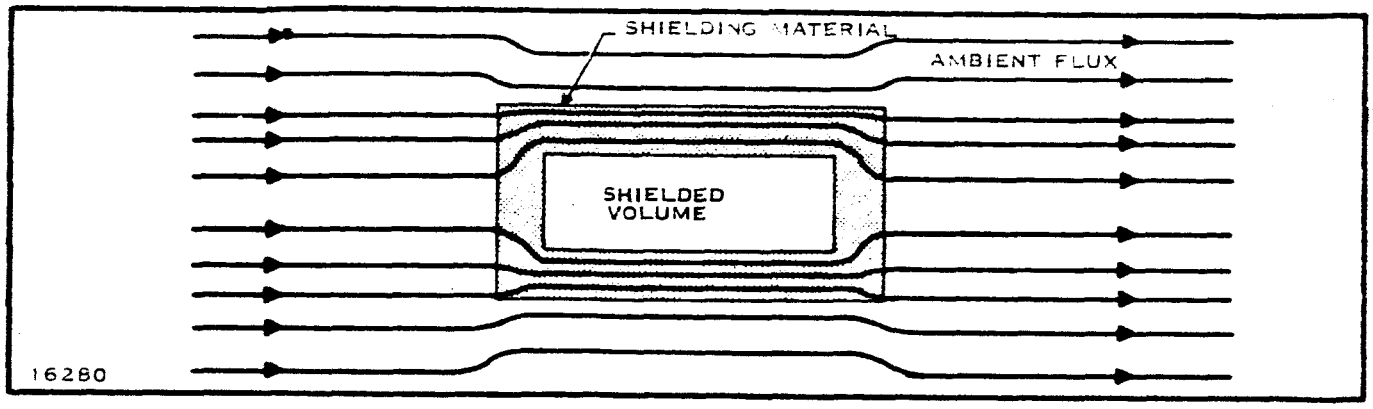


Figure 1-6. Correct Magnetic Shielding

The total flux density inside the bar is very high because of the assistance of the atomic dipole moments. But at points off the axis of the bar the flux density is greatly reduced due to the opposing field of the bar. In effect, the bar acts as a magnetic "funnel," gathering in flux lines from the surrounding space and forcing them through the bar.

The effect of magnetic shielding may now be easily explained. If it is necessary to keep a magnetic field out of an enclosure, one need only surround this enclosure with a high permeability material which will confine magnetic flux to the walls of the enclosure. The resulting flux density inside the enclosure may be made quite low, especially if several walls of shielding material are constructed (Figure 1-6).

However, this shielding effect does not operate well in the opposite sense; that is, it is much more difficult to confine the magnetic field due to a magnetized sample, or other such source, to the inside of an enclosure. To see the reason for this consider a simple case in which a magnetized bar is enclosed in a shield of high permeability material as shown in Figure 1-7.

The field due to the bar is indeed confined to the enclosure walls, but the enclosure walls now possess a moment of their own which will, of course, set up an external field. In some cases this external field will have a larger effect

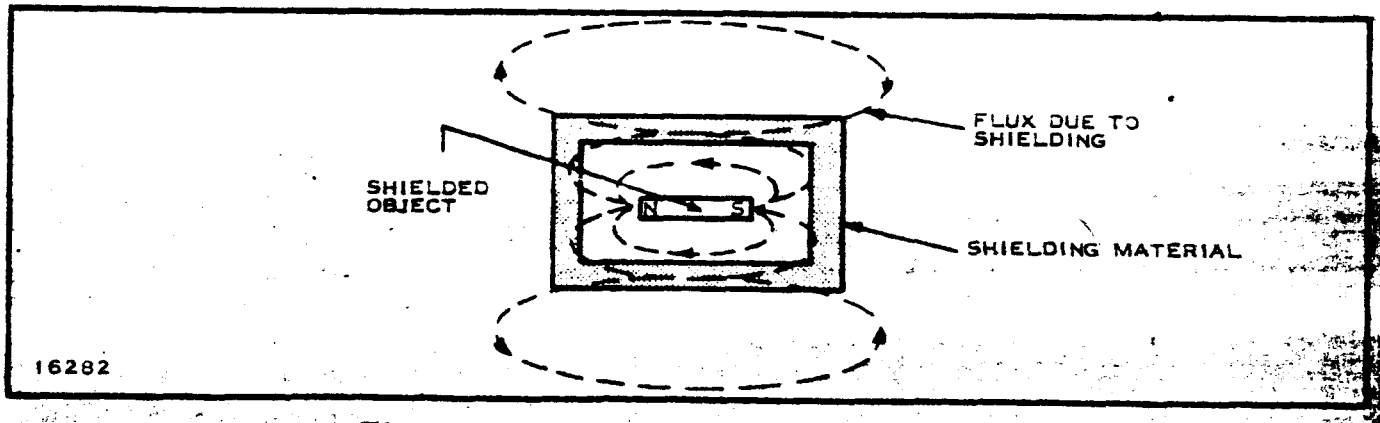


Figure 1-7. Incorrect Magnetic Shielding

than that due to the unshielded bar. Also, if the entire arrangement is sitting in an ambient field, such as the earth's field, the shielding material will assume a moment due to the ambient field. This may, again, completely negate the usefulness of the shielding. If a magnetic source must be compensated, it is far safer to place near it a dipole of the same moment but opposite sense. Either another magnetized sample or a properly designed coil would fill this requirement. Figure 1-8 shows the two compensating designs.

These remarks should not be taken to mean that it is impossible to reduce the field of a component by shielding. It is possible to design such a shield, but the geometry of the shield and the selection and preparation of the shielding material are quite critical. Full and completely enveloping shielding is the only sure type of magnetic shielding, and the less this envelope is broken by holes and cutouts the better the protection will be.

In selecting a shielding material, it is essential to know the range of magnetic flux density B over which the shielding must be effective. The proper shielding material can then be selected by consideration of the permeability curves of available materials. A permeability curve is a plot of permeability, $\mu$, versus flux density or induction, B. A typical permeability curve is shown in Figure 1-9. In general, it is desirable to design the shield to operate within the linear range of the curve between points A and B so that a change in ambient flux density is compensated by a linear change in permeability.

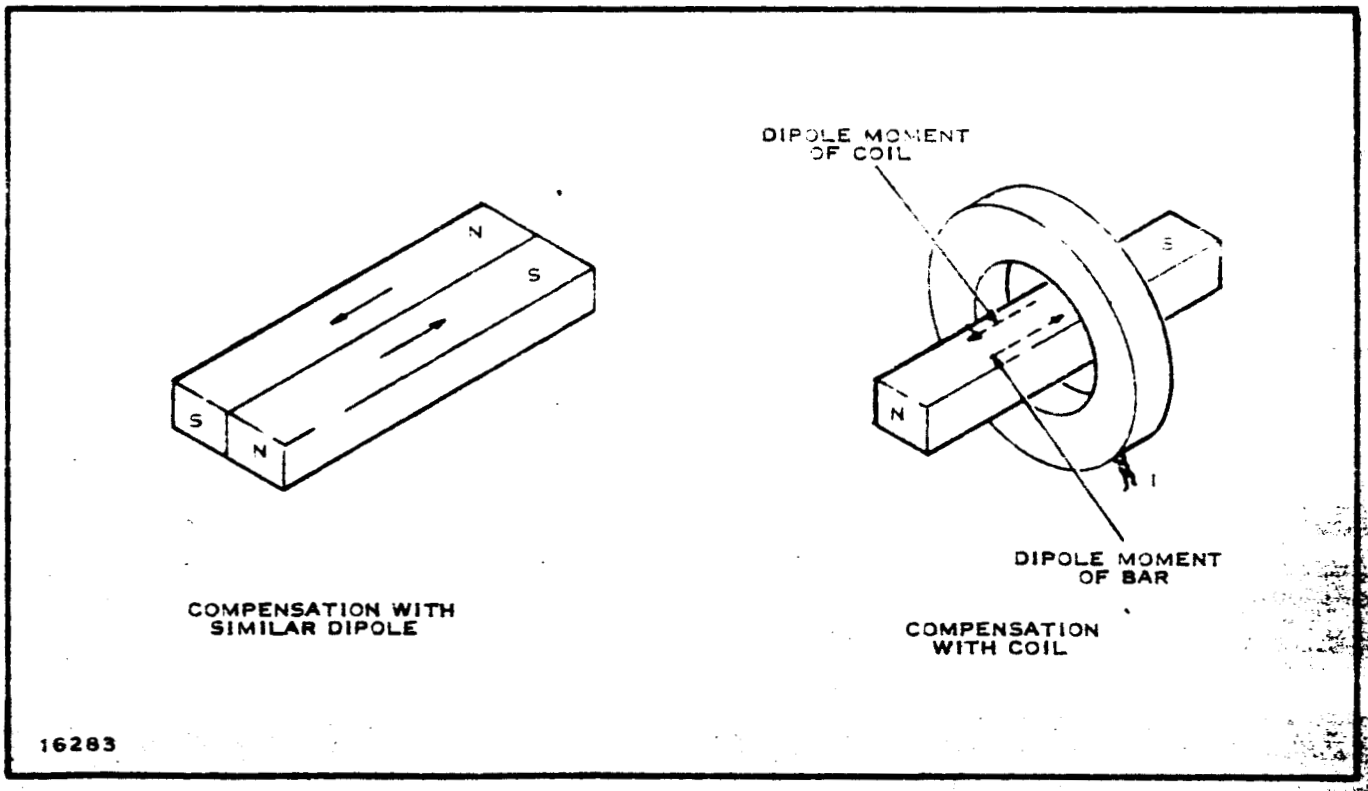


Figure 1-8. Magnetic Compensation

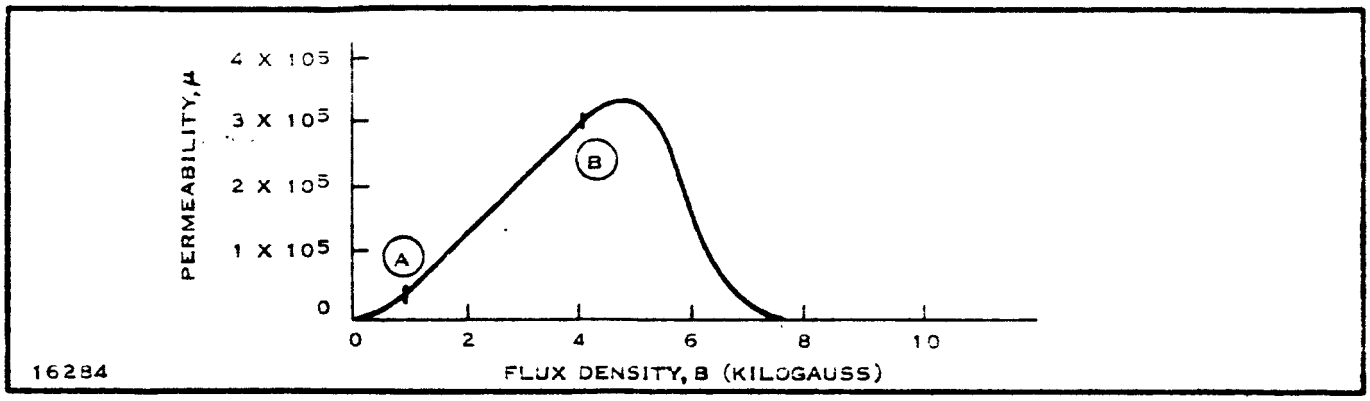


Figure 1-9. Permeability Curve

After a magnetic shield has been designed and fabricated, it is frequently annealed in order to gain a high permeability and remove internal stresses which may cause unstable residual flux densities. It is essential that annealing be performed after all machining and forming operations are completed.

It should be noted that, if the material used in magnetic shielding becomes saturated (that is, all the atomic dipoles become aligned with the field), the material will no longer act as an effective shield. This may be seen graphically on the permeability curve of Figure 1-9. For values of flux density between points A and B on the curve, the shielding material will be effective. However, as the flux density increases beyond point B, the material becomes saturated. This shows up as a decrease in permeability with increasing flux density.

The effectiveness of magnetic shielding may also be reduced by shock, vibration, and high temperature environments. Such conditions tend to destroy the alignment of the atomic dipoles in the material, thus affecting the shielding effect. The permeability of the shielding material and thus its effectiveness decreases with increasing temperatures until, at a critical temperature, the permeability is almost that of free space. Above this critical temperature, called the Curie temperature (point), the material will be paramagnetic rather than ferromagnetic. This effect occurs for all ferromagnetic materials.

It cannot be too strongly emphasized that the proper design of an effective magnetic shield requires the knowledge of an expert working in the field; it should not be attempted without such knowledge. It must also be emphasized that no one or two shielding materials provide a panacea for all shielding problems. Each and every shielding application requires individual consideration.

## I. DEMAGNETIZATION

Demagnetization of an object refers to the removal of the residual magnetization of the object. The process of demagnetization is also known as degaussing and deperming, since demagnetization removes the residual flux density (in gausses) and the permanent moment due to the residual magnetization. Demagnetization is often used in determining the magnetic properties of electronic components and assemblies. It has long been used by the Navy to reduce the magnetic moments of ships. Demagnetization can also be quite useful in reducing the magnetic effects of assemblies in close proximity to a sensitive magnetometer system.

There are two basic methods of demagnetizing an object. Both involve the use of a gradually decreasing alternating magnetic field. This has the effect of gradually shrinking to zero the area enclosed by the hysteresis curve of the object (see Figure 2-11, Section II, Glossary). Demagnetization may be accomplished by placing the magnetized object in an alternating magnetic field which is slowly being reduced in magnitude or by slowly moving the object out of a steady-state alternating magnetic field. The latter method is preferred, since it will usually yield more complete demagnetization.

An alternation frequency of 60 cycles per second is commonly used in demagnetization. The degree of demagnetization can be greatly improved by using a lower frequency, preferably in the neighborhood of 1 cycle per second.

The alternating magnetic field used in demagnetization will induce an electromotive force (emf) in any closed circuit loop in the object being demagnetized. The power due to this emf is dissipated as heat in the resistance of the circuit. For this reason, many designers fear that demagnetization procedures may damage an electronic circuit. There is little basis for these fears, since typical circuit loops are small enough so that normal demagnetization procedures will not harm the circuit.

The truth of this statement can be illustrated by an example. A 6 x 6 inch circuit module is to be demagnetized by gradually withdrawing it from a 100 gauss, 60 cps field. A circuit loop exists around the perimeter of the module. The induced emf may be calculated from Equation D-2-2 (Section III, Formulas) as

$$e = 6.45 \times 10^{-13}\, nA_{eff} \sin\phi \frac{\partial|\bar{B}|}{\partial t} \text{ volts}$$

where

$n = 1$ turn

$A_{eff} = (6 \times 6) = 36 \text{ in.}^2$

$\phi = 90°$ (for a maximum value of e)

$|\bar{B}| = 100 \sin(2\pi \times 60 \text{ cps})\, t \text{ (gausses)} = 10^7 \sin(377\, t) \text{ (gammas)}$

$$\frac{\partial|\bar{B}|}{\partial t} = 3.77 \times 10^9 \cos(377\, t) \text{ gammas/sec.}$$

Using the maximum value of $\partial|\bar{B}|/\partial t$ to find $e_{max}$,

$$e_{max} = (6.45 \times 10^{-13})\,(1)\,(36)\,(1)\,(3.77 \times 10^{9}) \text{ volts}$$

$$= 8.75 \times 10^{-2} \text{ volts} = 87.5 \text{ mv.}$$

The maximum power dissipated in the loop is

$$P_{max} = (e_{max})^2 / R_{min}.$$

If the minimum component resistance is assumed to be 1 ohm (a fairly liberal assumption),

$$P_{max} = \frac{(8.75 \times 10^{-2})^2}{1} \text{ watt}$$

$$= 7.66 \text{ milliwatt.}$$

It is extremely unlikely that this power level would damage any electronic component. It should be noted that, if a 1-cps alternation frequency were used instead of 60 cps, the power dissipated would be extremely small. In the above example, the maximum power dissipated in the 1-ohm circuit would be about 2 microwatts.

## J. THE INVERSE CUBE RELATIONSHIP

The inverse cube relationship mentioned briefly (see part 6. F. The Dipole Field) is sufficiently important in the study of magnetic effects of components to merit a separate discussion and derivation. It is standard procedure to measure the field due to a sample at a given distance from the sample. If the test distance is sufficiently large for a given sample, the field of the sample can be approximated by the field of an equivalent dipole which decreases in inverse proportion to the cube of the test distance.

Consider the bar magnet shown in Figure 1-10. The magnet may be visualized as consisting of two oppositely charged magnetic poles of strength $m_p$ separated by a distance $\ell$. It is desired to find the magnetic field intensity ($\bar{H}$) at a point P located on the pole axis of the magnet and a distance r from the center of the magnet.

The field intensity at P due to the north pole is:

$$\bar{H}_N = \frac{m_p}{\left(r - \frac{\ell}{2}\right)^2} \quad \text{oersted (CGS-EMU)}$$

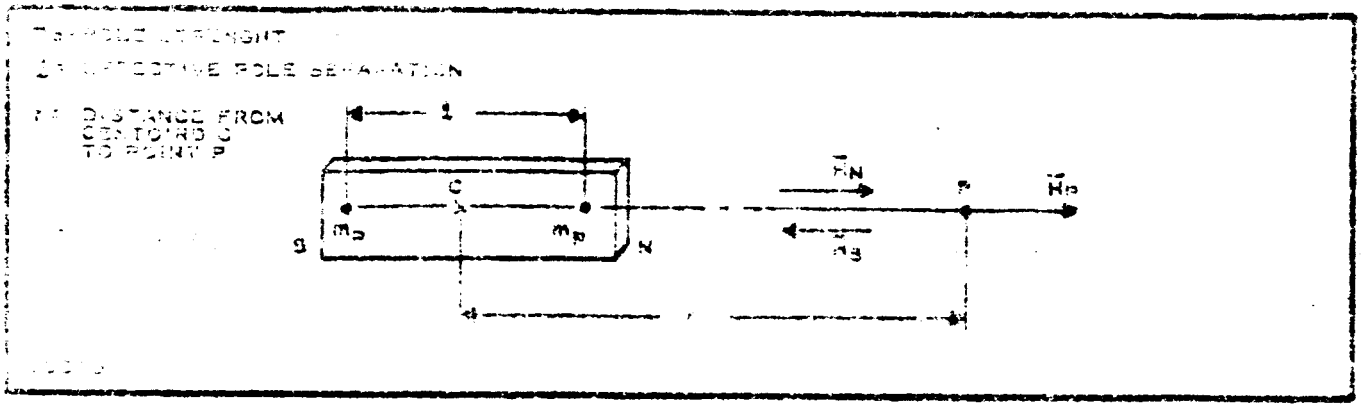


Figure 1-10. Derivation of Inverse Cube Relationship for Field of a Bar Magnet

The field intensity at P due to the south pole has the opposite direction as $\bar{H}_N$.

$$\bar{H}_S = \frac{-m_p}{\left(r + \frac{\ell}{2}\right)^2} \quad \text{oersted (CGS-EMU).}$$

Since both $\bar{H}_N$ and $\bar{H}_S$ act along a line parallel to the pole axis, the resultant field at point P is the algebraic sum of $\bar{H}_N$ and $\bar{H}_S$.

$$\bar{H}_p = \bar{H}_N + \bar{H}_S = \frac{m_p}{\left(r - \frac{\ell}{2}\right)^2} - \frac{m_p}{\left(r + \frac{\ell}{2}\right)^2} \quad \text{oersted (CGS-EMU).}$$

Simplifying:

$$|\bar{H}_p| = \frac{2\, r m_p \ell}{\left(r^2 - \frac{\ell^2}{4}\right)^2} \quad \text{oersted (CGS-EMU).}$$

Noting that the quantity ($m_p \ell$) is the magnitude of the dipole moment ($|\bar{m}|$) in CGS units (C-3-1, Section IV, Formulas),

$$|\bar{H}_p| = 2\,|\bar{m}|\,\frac{r}{\left(r^2 - \frac{\ell^2}{4}\right)^2} \quad \text{oersted (CGS-EMU).}$$

Since flux density ($\bar{B}$) and field intensity ($\bar{H}$) are equivalent in a nonmagnetic medium in the CGS-EMU system ($\mu = \mu_o = 1$), the above equation can be written

$$|\bar{B}_p| = |\bar{H}_p| = 2\,|\bar{m}|\,\frac{r}{\left(r^2 - \frac{\ell^2}{4}\right)^2} \times 10^5 \text{ gamma (CGS-EMU).}$$

This equation defines the flux density and field intensity at any point on the pole axis of a magnetic dipole. If $r \geq 3\,\ell$, this equation reduces to

$$|\bar{B}_p| = |\bar{H}_p| = \frac{2|\bar{m}|}{r^3} \times 10^5 \text{ gamma (CGS-EMU)}$$

with less than 6 percent error. The above equation defines the far-field values of $\bar{B}$ and $\bar{H}$ at a point on the pole axis of a magnetic dipole and is similar to formula E-4-2 (Section IV, Formulas) for the condition of $\theta = 0$ degree. Similar equations may be derived for $\bar{B}$ and $\bar{H}$ at any point in the far field.

As a rule of thumb, use of a sample-to-sensor distance equal to or greater than three times the largest dimension of the sample permits valid use of the far-field equations with negligible error.

## SECTION II

## GLOSSARY

### A. INTRODUCTION

This glossary of terms and symbols is furnished as a reference to many of the terms and symbols used in the study and application of magnetic effects.

In the glossary of terms, each term is followed (where applicable) by the preferred symbol (given first) and alternate symbols less commonly used. The dimensions of the quantities that follow the symbol are given in rationalized MKS units (RMKS) and in CGS-electromagnetic units (CGS-EMU). The terms "CGS units" and "EMU" are synonymous and refer to units in the CGS electromagnetic system to which no name has been given. For example, magnetic dipole moment is usually given in ampere-turns-meter$^2$ in the rationalized MKS system and in CGS units or EMU in the CGS-electromagnetic system (actual units: abamp-centimeter$^2$). Since the term "CGS Units" is more frequently used in this field, it will be used throughout this report.

The glossary of symbols lists those symbols most commonly used in magnetics and the quantities to which they refer.

### B. INDEX


| Item | Page |
|---|---|
| Abamp | 2-9 |
| Abcoulomb | 2-9 |
| Absolute Permeability (see Permeability) | 2-29 |
| Abvolt | 2-9 |
| Alloy | 2-9 |
| Ampere | 2-9 |
| Angle, Dip (see Dip Angle) | 2-12 |
| Anomaly, Magnetic (see Magnetic Anomaly) | 2-22 |
| Barkhausen Effect | 2-9 |
| Calibration, Favorable Position | 2-9 |
| Calibration, Unfavorable Position | 2-9 |
| Coercive Force | 2-10 |
| Coercivity | 2-11 |
| Co-Netic | 2-11 |

| Item | Page |
|---|---|
| Constant, Magnetic (see Permeability) | 2-28 |
| Coulomb | 2-11 |
| Curie Temperature | 2-11 |
| Current Density | 2-11 |
| Current Loop | 2-11 |
| Currents, Eddy (see Eddy Currents) | 2-15 |
| Curve, Initial Magnetization (see Initial Magnetization Curve) | 2-20 |
| Curve, Normal Magnetization (see Normal Magnetization Curve) | 2-27 |
| Curve, Permeability (see Permeability Curve) | 2-31 |
| Degaussing (see Demagnetization) | 2-12 |
| Demagnetization | 2-12 |
| Demagnetizing Factor | 2-12 |
| Density, Displacement Current (see Displacement Current Density) | 2-14 |
| Density, Magnetic Flux (see Magnetic Flux Density) | 2-23 |
| Density, Residual Flux (see Residual Flux Density) | 2-35 |
| Density, Saturation Flux (see Saturation Flux Density) | 2-37 |
| Deperming (see Demagnetization) | 2-12 |
| Diamagnetic | 2-12 |
| Diamagnetism | 2-12 |
| Differential Permeability (see Permeability) | 2-30 |
| Dip Angle | 2-12 |
| Dipole, Magnetic | 2-12 |
| Dipole Moment | 2-12 |
| Displacement | 2-13 |
| Displacement Current Density | 2-14 |
| Domain | 2-14 |
| Dumet | 2-14 |
| Dynamic Magnetic Field | 2-15 |
| Dyne | 2-15 |

| Item | Page |
|---|---|
| Eddy Currents | 2-15 |
| Effect, Barkhausen (see Barkhausen Effect) | 2-9 |
| Effect, Zeeman (see Zeeman Effect) | 2-40 |
| Effective Permeability (see Permeability) | 2-31 |
| Electromotive Force | 2-15 |
| Electromotive Force, Induced | 2-15 |
| Erg | 2-16 |
| Factor, Demagnetizing (see Demagnetizing Factor) | 2-12 |
| Fahy-Simplex, Permeameter | 2-16 |
| Fanselau Coils | 2-16 |
| Favorable Calibration Position (see Calibration, Favorable Position) | 2-9 |
| Ferric Induction | 2-16 |
| Ferrite | 2-16 |
| Ferromagnetic | 2-17 |
| Ferromagnetism | 2-17 |
| Field, Dynamic Magnetic (see Dynamic Magnetic Field) | 2-15 |
| Field, Homogeneous (see Homogeneous Field) | 2-19 |
| Flux, Magnetic (see Magnetic Flux) | 2-23 |
| Flux Density, Magnetic (see Magnetic Flux Density) | 2-23 |
| Flux-Gate Magnetometer | 2-17 |
| Flux, Intrinsic (see Intrinsic Induction) | 2-21 |
| Flux, Line of (see Line of Flux) | 2-22 |
| Flux Linkage | 2-18 |
| Force, Coercive (see Coercive Force) | 2-10 |
| Force, Electromotive (see Electromotive Force) | 2-15 |
| Force, Magnetic (see Magnetic Field Intensity) | 2-22 |
| Gamma | 2-18 |
| Gamma Slinger | 2-18 |
| Gauss | 2-18 |
| Gilbert | 2-19 |

| Item | Page |
|---|---|
| Gradient, Horizontal (see Horizontal Gradient) | 2-20 |
| Gradient, Vertical (see Vertical Gradient) | 2-40 |
| Hard Magnet (see Permanent Magnet) | 2-28 |
| Helmholtz Coils | 2-19 |
| Henry | 2-19 |
| Homogeneous Field | 2-19 |
| Horizontal Gradient | 2-20 |
| Hysteresis | 2-[illegible] |
| Hysteresis Loop | 2-[illegible] |
| Inclusion, Magnetic (see Magnetic Inclusion) | 2-24 |
| Incremental Permeability (see Permeability) | [illegible] |
| Inductance, Mutual (see Mutual Inductance) | 2-27 |
| Inductance, Self (see Self Inductance) | 2-39 |
| Induction, Magnetic (see Magnetic Flux Density) | 2-23 |
| Induction, Saturation (see Saturation Flux Density) | 2-37 |
| Intensity, Magnetic Field (see Magnetic Field Intensity) | 2-22 |
| Intensity, Maximum Magnetic Field (see Maximum Magnetic Field Intensity) | 2-26 |
| Intensity, Saturation Magnetic Field (see Saturation Magnetic Field Intensity) | 2-37 |
| Initial Magnetization Curve | 2-[illegible] |
| Intrinsic Flux (see Intrinsic Induction) | 2-[illegible] |
| Intrinsic Induction | 2-[illegible] |
| Joule | 2-[illegible] |
| Kovar | 2-[illegible] |
| Law, Lenz's | 2-[illegible] |
| Lenz's Law | 2-[illegible] |
| Line of Flux | 2-22 |
| Linkage, Flux (see Flux Linkage) | 2-18 |
| Loop, Hysteresis (see Hysteresis Loop) | 2-[illegible] |
| Loop, Saturation Hysteresis (see Saturation Hysteresis Loop) | 2-37 |

| Item | Page |
|---|---|
| Magnet, Permanent (see Permanent Magnet) | 2-28 |
| Magnet, Temporary (see Temporary Magnet) | 2-39 |
| Magnetic Anomaly | 2-22 |
| Magnetic Constant (see Permeability) | 2-28 |
| Magnetic Field, Dynamic (see Dynamic Magnetic Field) | 2-15 |
| Magnetic Field Intensity | 2-22 |
| Magnetic Field, Static (see Static Magnetic Field) | 2-38 |
| Magnetic Field Strength (see Magnetic Field Intensity) | 2-22 |
| Magnetic Flux | 2-23 |
| Magnetic Flux Density | 2-23 |
| Magnetic Induction | 2-24 |
| Magnetic Induction (see Magnetic Flux Density) | 2-23 |
| Magnetic Intensity (see Magnetic Field Intensity) | 2-22 |
| Magnetic Loop Moment (see Dipole Moment) | 2-12 |
| Magnetic Moment Per Unit Volume (see Magnetization) | 2-24 |
| Magnetic Pole (see Pole, Magnetic) | 2-32 |
| Magnetic Potential (see Potential, Magnetic) | 2-32 |
| Magnetic Shielding (Material) | 2-24 |
| Magnetization | 2-24 |
| Magnetization, Residual (see Residual Magnetization) | 2-36 |
| Magnetization, Saturation (see Saturation Magnetization) | 2-37 |
| Magnetization, Symmetrical and Cyclical (see Symmetrical and Cyclical Magnetization) | 2-39 |
| Magnetization Stability | 2-25 |
| Magnetometer, Flux Gate (see Flux Gate Magnetometer) | 2-17 |
| Magnetometer, Metastable Helium (see Metastable Helium Magnetometer) | 2-26 |

| Item | Page |
|---|---|
| Magnetometer, Precession | 2-25 |
| Magnetometer, Rubidium Vapor | 2-35 |
| Magnetometer, Torque (see Torque Magnetometer) | 2-39 |
| Magnetometer, Total Field (see Total Field Magnetometer) | 2-39 |
| Magnetometer, Vector (see Vector Magnetometer) | 2-40 |
| Magnetomotive Force | 2-28 |
| Magnetostriction | 2-19 |
| Material, Magnetic Shielding (see Magnetic Shielding—Material) | 2-21 |
| Maximum Flux Density | 2-28 |
| Maximum Magnetic Field Intensity | 2-28 |
| Maximum Permeability (see Permeability) | 2-32 |
| Maxwell | 2-26 |
| Metastable Helium Magnetometer | 2-26 |
| Mutual Inductance | 2-27 |
| Netic | 2-27 |
| Newton | 2-27 |
| Normal Hysteresis Loop (see Hysteresis Loop) | 2-20 |
| Normal Magnetization Curve | 2-27 |
| Oersted | 2-27 |
| Paramagnetic | 2-29 |
| Paramagnetism (see Paramagnetic) | 2-29 |
| Peak Permeability (see Permeability) | 2-33 |
| Perm (see Magnetization and Residual Flux Density) | 2-35/2-36 |
| Perm Stability (see Magnetization Stability) | 2-25 |
| Permanent Magnet | 2-28 |
| Permeability | 2-28 |
| Absolute | 2-29 |
| Differential | 2-30 |

| Item | Page |
|---|---|
| Permeability (Cont) | |
| Effective | 2-31 |
| Incremental | 2-30 |
| Maximum | 2-30 |
| Normal | 2-30 |
| Peak | 2-30 |
| Relative | 2-29 |
| Of Free Space | 2-28 |
| Permeability Curve | 2-31 |
| Permeance | 2-31 |
| Permeameter | 2-31 |
| Physical Point | 2-31 |
| Point Physical (see Physical Point) | 2-31 |
| Pole, Magnetic | 2-32 |
| Pole Strength | 2-32 |
| Pole, Unit (see Unit Pole) | 2-39 |
| Potential, Magnetic | 2-32 |
| Potential, Vector | 2-33 |
| Pragilbert | 2-33 |
| Praoersted | 2-33 |
| Pseudo-Perm | 2-33 |
| Rationalized Units | 2-33 |
| Relative Permeability (see Permeability) | 2-39 |
| Reluctance | 2-34 |
| Reluctivity | 2-34 |
| Remanence | 2-34 |
| Residual Flux Density | 2-35 |
| Residual Induction (see Residual Flux Density | 2-35 |
| Residual Magnetism | 2-36 |

| Item | Page |
|---|---|
| Retentivity | 2-36 |
| Rubidium Vapor Magnetometer | 2-37 |
| Saturation Flux Density | 2-37 |
| Saturation Hysteresis Loop | 2-37 |
| Saturation Induction (see Saturation Flux Density) | 2-37 |
| Saturation Magnetic Field Intensity | 2-37 |
| Saturation Magnetization | 2-37 |
| Self Inductance | 2-38 |
| Skin Depth, Magnetic | 2-38 |
| Slinger, Gamma (see Gamma Slinger) | 2-18 |
| Soft Magnet (see Temporary Magnet) | 2-39 |
| Static Magnetic Field | 2-38 |
| Static Permeability (see Permeability) | 2-28 |
| Susceptibility | 2-38 |
| Symmetrical and Cyclical Magnetism | 2-39 |
| Temporary Magnet | 2-39 |
| Torque Magnetometer | 2-39 |
| Total Field Magnetometer | 2-39 |
| Unit Pole | 2-39 |
| Vector Magnetometer | 2-40 |
| Vertical Gradient | 2-40 |
| Volt | 2-40 |
| Weber | 2-40 |
| Zeeman Effect | |

## C. DEFINITIONS

Abamp, Abcoulomb, Abvolt:

In the CGS-EMU system of units:

The abamp is the unit of current

The abcoulomb is the unit of charge

The abvolt is the unit of electrical potential.

Absolute Permeability:

See under Permeability (2).

Alloy:

An alloy is a homogenous mixture of two or more metals.

Ampere:

The ampere is the MKS unit of electrical current, or rate of flow charge.

$$1 \text{ ampere} = 1 \frac{\text{coulomb}}{\text{sec}} .$$

Annealing:

Annealing is a process of heat treatment and controlled cooling applied to some alloys to remove or prevent internal stresses. Magnetic shielding materials are normally annealed after forming to gain high permeabilities.

Anomaly, Magnetic:

See under Magnetic Anomaly.

Barkhausen Effect:

When a ferromagnetic material is placed in a magnetizing field, $\bar{H}$, and the field is smoothly increased, the induction, $\bar{B}$, in the material changes in discreet steps as the individual domains in the material change their alignment. This step-wise change is called the Barkhausen effect. (See Figure 2-11.)

Calibration, Favorable, Unfavorable Positions:

Magnetic sensing devices are generally calibrated by aligning the sensitive axis of the sensor with the earth's magnetic field and rotating a magnet of known strength at a known distance from the sensor. The peak-to-peak field seen at the sensor due to the rotating magnet, is used as the calibration.

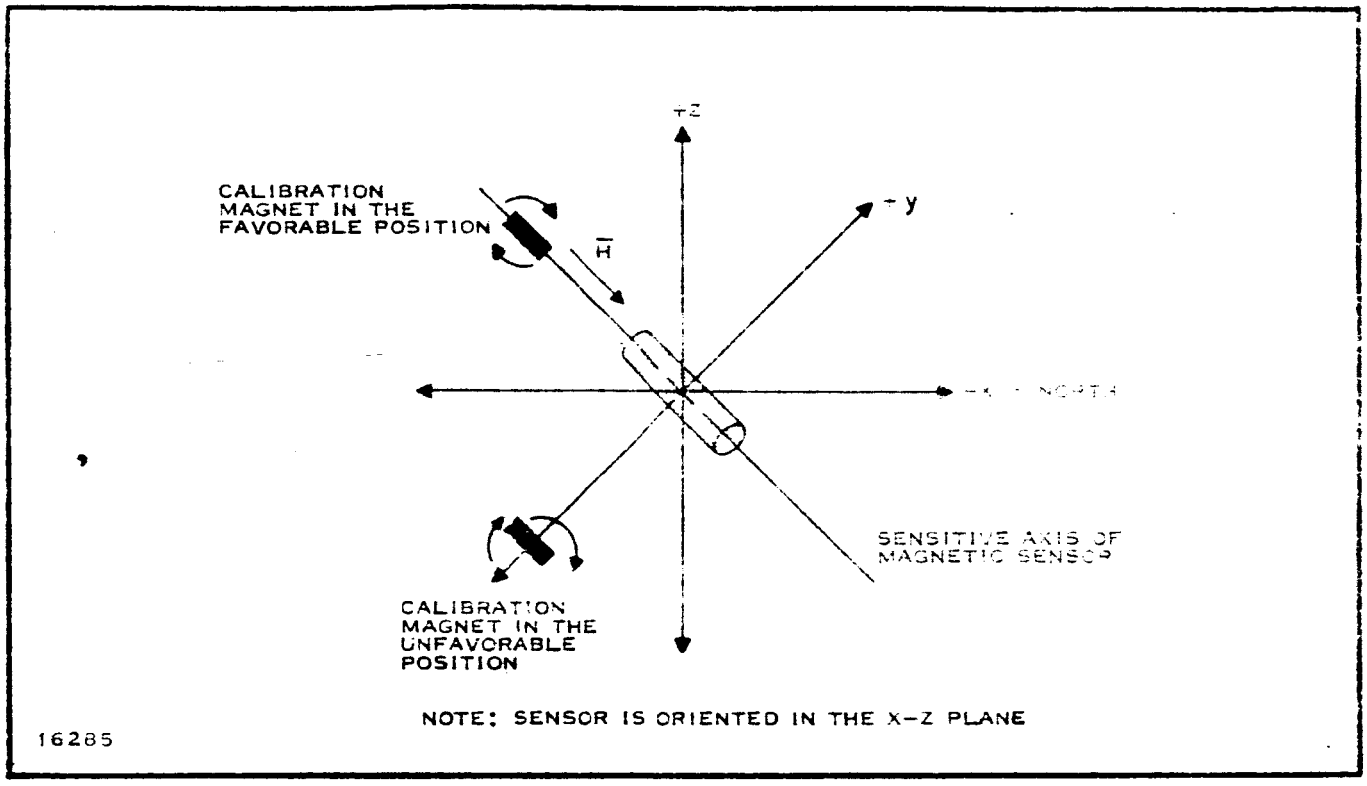


Figure 2-1. Favorable and Unfavorable Calibration Positions

If the calibration magnet is rotated in a plane perpendicular to another plane normal to the sensitive axis of the sensor and passing through the sensor, only the $B_z$ component of the calibration magnet is seen by the sensor. (See "Field due to a dipole" in Section IV, Formulas.) This is the unfavorable position.

If the calibration magnet is rotated at the same distance from the sensor as before but in an orientation so that at sometime during its rotation its longitudinal axis is aligned with the axis of the sensor, the peak-to-peak signal will be twice as great as before. This is the favorable position.

An example of both the favorable and unfavorable positions are shown in Figure 2-1.

Coercive Force: $H_c$

$$\frac{\text{amp-turn}}{\text{meter}} \text{ (RMKS); oersted (CGS-EMU).}$$

For a ferromagnetic material, the coercive force is the value of reverse magnetic field intensity required to reduce the residual flux density to zero when the material has been symmetrically and cyclically magnetized. The coercive force is the magnitude of $\bar{H}$

at the intersection of a closed hysteresis loop with the $-|\bar{H}|$ axis (Figure 2-11a).

Coercivity: $H_{cs}$

$$\frac{\text{amp-turn}}{\text{meter}} \text{ (RMKS); oersted (CGS-EMU).}$$

For a ferromagnetic material, the coercivity is the value of reverse magnetic field intensity required to reduce the residual flux density to zero when the material has been symmetrically and cyclically magnetized to saturation. The coercivity is therefore the maximum value of coercive force for a given material. It is the magnitude of $\bar{H}$ at the intersection of a saturation hysteresis loop with the $-|\bar{H}|$ axis (Figure 2-11b).

Co-Netic:

Co-Netic is a trade name (Perfection Mica Co.) for a high permeability, low saturation induction alloy. Manufacturer's recommended application is for low-level magnetic shielding.

Coulomb:

The coulomb is the unit of electrical charge in the MKS system of units.

Curie Temperature: $T_c$

As the temperature of a ferromagnetic material is increased, the relative permeability decreases until, at the Curie temperature (Curie point), it is nearly unity. Above the Curie temperature the material is paramagnetic but not ferromagnetic. A typical value for iron is

$$T_c = 760° \text{ C.}$$

Current Density: $\bar{J}$

$$\frac{\text{amperes}}{\text{meters}^2} \text{ (RMKS); } \frac{\text{abamps}}{\text{cm}^2} \text{ (CGS-EMU)}$$

The current density vector indicates the amount of charge flowing in a region per unit time per unit area. The direction of $\bar{J}$ indicates the direction of current flow.

Current Loop:

A current loop is defined as any complete, current-carrying circuit.

Degaussing:

See under Demagnetization.

**Demagnetization:**

Demagnetization refers to the removal of the residual flux density ($B_r$), of a magnetized material. Demagnetization is normally accomplished by placing the magnetized object in an alternating magnetic field which is slowly being reduced in magnitude, or by slowly withdrawing the object from a steady-state alternating magnetic field. This process is also called degaussing and deperming.

Demagnetizing Factor: D — Unitless

When a material is magnetized, a field is set up within the material which opposes the magnetizing field (Lenz's Law). This internal field, $\bar{H}_d$, is roughly proportional to the magnetization $\bar{M}$ such that

$$\bar{H}_d = - D\bar{M} .$$

D is called the demagnetizing factor.

**Deperming:**

See under Demagnetization.

**Diamagnetic, Diamagnetism:**

In a diamagnetic material, the effect of Lenz's Law on the electron orbits in individual atoms tends to decrease the flux through the material. This process is known as diamagnetism and is present in all materials though it may be masked by paramagnetic or ferromagnetic effects. A purely diamagnetic material will have a susceptibility $\chi_m$ in the range $-1 < \chi_m < 0$ and will be weakly repelled by a magnet.

**Differential Permeability:**

See under Permeability (7).

**Dip Angle:**

The dip angle is the angle between the earth's magnetic field and the surface of the earth. The line of zero dip angle is called the magnetic equator (see Figure 2-2).

**Dipole, Magnetic, Dipole Moment:** $\bar{m}$, $\bar{p}_m$

amp-turn-meter$^2$ or weber-meter (RMKS)
CGS units (CGS-EMU).

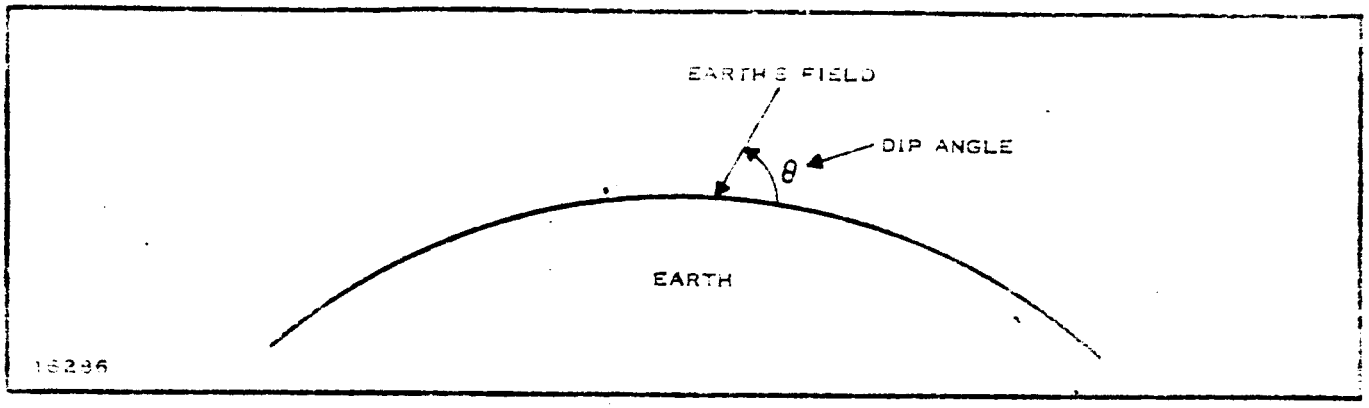


Figure 1-2. Dip Angle

A magnetic dipole is any system in which the [illegible] circulation of current such as [illegible] spins, or current loops. The strength [illegible] measured in terms of dipole moment which, for a bar magnet, is the product of the pole strength $m_p$ and the pole separation, $\ell$. The magnitude [illegible] moment is $|\bar{m}| = m_p \ell$. At a large distance, a current loop or coil may be assumed to be replaced by a small bar magnet with the same dipole moment and oriented along the axis perpendicular to the plane of the coil. Equations for the dipole moment of a coil are given in Section IV. Also called magnetic loop moment.

NOTE: The notation $\bar{p}_m$ is generally taken to mean

[illegible]

or

$$\bar{p}_m = \bar{m} \text{ (CGS-EMU)}.$$

Displacement: $\bar{D}$

$$\frac{\text{coulomb}}{\text{meter}^2} \text{ (RMKS)}; \quad \frac{\text{abcoulomb}}{\text{cm}^2} \text{ (CGS-EMU)}$$

The displacement vector is a vector defining the electric flux density at a physical point. This is analogous to the magnetic flux density $\bar{B}$. $\bar{D}$ is defined by

$$\bar{D} = \epsilon_o \bar{E} + \bar{P} \quad \text{(RMKS)}$$

where $\epsilon_o$ is the permittivity of free space, $\bar{E}$ is the electric field intensity, and $\bar{P}$ is the polarization.

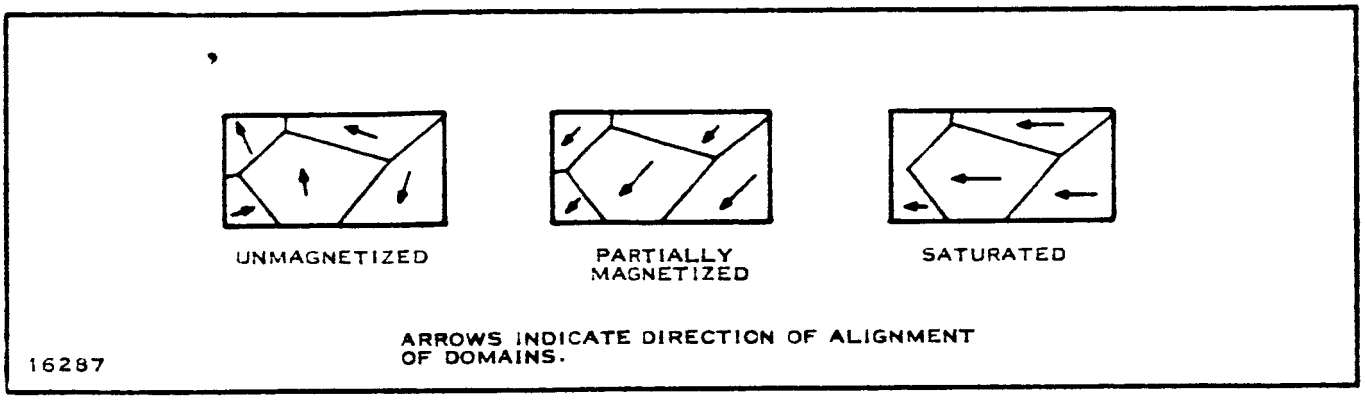


Figure 2-3. Domains

Displacement Current Density: $\frac{\partial \bar{D}}{\partial t}$

$$\frac{\text{amperes}}{\text{meter}^2}\ (\text{RMKS});\ \frac{\text{abamps}}{\text{cm}^2}\ (\text{CGS-EMU}).$$

The displacement current density describes an apparent flow of current due to displacement of charge, as in a charging capacitor. This apparent flow of current is able to contribute to a magnetic field.

Domain:

A domain is a small region ($10^{12}$ to $10^{15}$ atoms) in a ferromagnetic material which acts as a small bar magnet. Within each domain the magnetic moments of all electron spins are aligned parallel to one another. In other words, each domain is magnetized to saturation. In an unmagnetized sample of ferromagnetic material, there is a random variation in direction from one domain to another so that the net magnetic moment of any sizeable sample is zero. Domain boundaries are not constant and may change appreciably as applied fields change the state of magnetization in the material. At saturation, all domains are aligned with the applied field (Figure 2-3).

Dumet:

Dumet is an alloy of 42 percent nickel and 58 percent iron. Its thermal expansion characteristics are similar to those of platinum and it is used in many glass-to-metal seals.

Dynamic Magnetic Field:

A dynamic magnetic field is one which varies with time.

Dyne (CGS):

The dyne is the unit of force in the CGS system of units.

$$1 \text{ dyne} = 1 \frac{\text{gram-centimeter}}{\text{second}^2} .$$

Eddy Currents:

Eddy currents are currents induced in a mass of conductive material when the material is placed in a changing magnetic field or is moved through a magnetic field. The currents build up in such a way as to oppose the change in the magnetic induction (flux density or the change in lines of flux per unit area in the material) (Lenz's Law). Ohmic heating ($I^2R$) due to these currents results in power losses in magnetic devices (transformers, generators, etc.).

Effective Permeability:

See Permeability (9).

Electromotive Force: e, $\mathcal{E}$, emf

volts (RMKS); abvolts (CGS-EMU).

The electromotive force between two points is the open-circuit potential difference between those two points.

Electromotive Force, Induced: e, $\mathcal{E}$, emf

Volts (RMKS); abvolts (CGS-EMU)

If the magnetic flux $\Phi$ through a circuit bounding an area A changes at a rate $\partial\Phi / \partial t$, an emf will be induced in the circuit such that

$$e = - \frac{\partial \Phi}{\partial t} .$$

In accordance with Lenz's Law this effect will occur either if the circuit is moved or if the flux density changes, so long as the number of lines through the circuit changes (Figure 2-4).

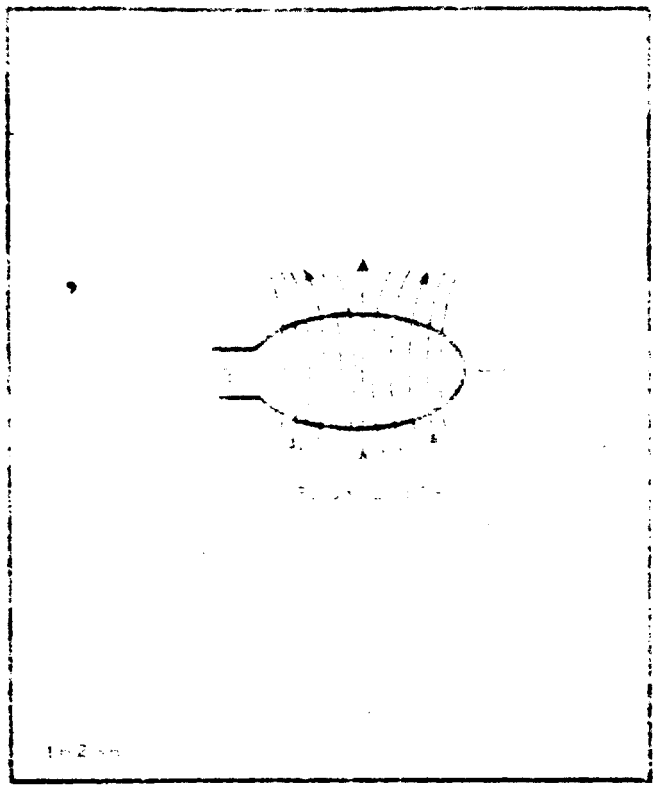

Figure 2-4. Illustration of Lenz' Law

However, provides a [illegible] volume than a Helmholtz system. [illegible] Section VI, Reference [illegible] arrangement of [illegible] geneous volume. These [illegible]

[illegible]

Ferrites

Ferrites are ferro[illegible] iron oxide. Most [illegible]

| | |
|---|---|
| Mn $Fe_2O_4$ | Mg [illegible] |
| Fe $Fe_2O_4$ | Al $Fe_2O_4$ |
| Ni $Fe_2O_4$ | Co $Fe_2O_4$ |
| Cu $Fe_2O_4$ | |

Ferrites [illegible] low conductivity and correspondingly [illegible] losses.

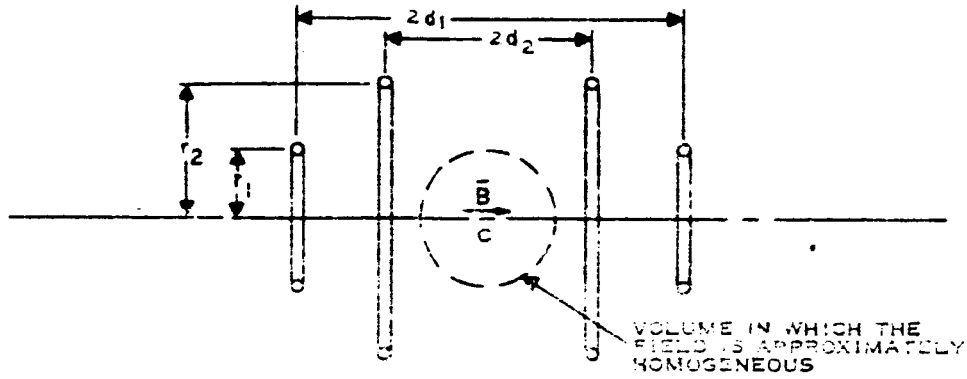


A. RELATIVE DIMENSIONS:

$\frac{d_1}{r_1} = 1.10723$ $\frac{r_2}{r_1} = 1.30915$ $\frac{d_2}{r_1} = 0.36401$ $\frac{d_2}{r_2} = 0.27805$

B. FOR A 1 GAUSS FIELD AT THE CENTER OF THE COIL SYSTEM, THE CURRENT REQUIRED IN EACH OF THE FOUR COILS IS $0.80852\ r_1$ AMPERES/TURN, WHERE $r_1$ IS IN CENTIMETERS.

16320

Figure 2-5. Fanselau Coils, Side View

Ferromagnetic, Ferromagnetism:

Ferromagnetism is classed as extreme paramagnetism. Ferromagnetic materials (such as nickel, cobalt, iron and many of their mixtures and compounds) are characterized by a large value of magnetization for small values of magnetizing field. Ferromagnetic materials are composed of domains which are individually magnetized to saturation. See also Domain.

Field, Homogeneous:

See under Homogeneous Field.

Flux, Magnetic: $\Phi$

See under Magnetic Flux.

Flux Density, Magnetic:

See under Magnetic Flux Density.

Flux-Gate Magnetometer:

A flux-gate magnetometer is one in which vector sum of measured (or perturbing) and exciting fields are sensed by a fixed coil wound on a ferromagnetic core operated near saturation.

Flux Linkage: $n\Phi$

weber-turn (RMKS); maxwell-turn (CGS-EMU)

Flux linkage is the product of the magnetic flux $\Phi$ through a circuit and the number of turns comprising the circuit.

Force, Coercive: $H_c$

See under Coercive Force.

Force, Magnetic:

See Magnetic Field Intensity.

Gamma: $\gamma$ (CGS-EMU)

The gamma is defined as a unit of magnetic field intensity ($\bar{H}$) and is equal to $10^{-5}$ gauss. NOTE: This is an apparent contradiction, since a gauss is a measure of magnetic flux density ($\bar{B}$). It would seem, then, that the gamma should be equal to $10^{-5}$ oersted. The definition is valid but only in a true nonmagnetic medium in which the permeability ($\mu$) is equal to 1 (CGS-EMU). The use of the term "gamma" as a unit of field intensity was first introduced in studies of geomagnetism (in which, of course, $\mu = \mu_o = 1$ and gausses and oersteds are equivalent) and is now internationally accepted. For example, the earth's magnetic field varies between 25,000 and 75,000 gammas, or 0.25 to 0.75 oersted (or gauss). The gamma is sometimes used for both field intensity and flux density when the permeability is unity. See also Oersted.

Gamma Slinger:

A gamma slinger is a device consisting of a magnet of known strength which may be rotated at various speeds to establish a periodic magnetic field for calibration of magnetic instruments.

Gauss: (CGS-EMU)

The gauss is the unit of magnetic flux density in the CGS-EMU system. The term gauss is often applied to magnetic field intensity since the relationship

$$\bar{B} = \bar{H} \text{ ( for free space in CGS-EMU system in which } \mu_o = 1)$$

suggests that field intensity and flux density must be in identical units.

Gilbert: (CGS-EMU)

The gilbert is the unit of magnetomotive force (mmf) in the CGS-EMU system. One gilbert = $10/4\pi$ ampere-turn = 0.796 ampere-turn.

Gradient, Horizontal:

See under Horizontal Gradient.

Gradient, Vertical:

See under Vertical Gradient.

Hard Magnet:

See under Permanent Magnet.

Helmholtz Coils:

Helmholtz coils consist of a pair of coaxial, series-aiding coils separated by a distance equal to the radius of one coil. The field in a small volume about point A shown below is very nearly homogeneous. Such an arrangement may be used to buck out ambient fields or to apply a test field to a sample (Figure 2-6). See Section Section IV, Formulas, for method of computing field.

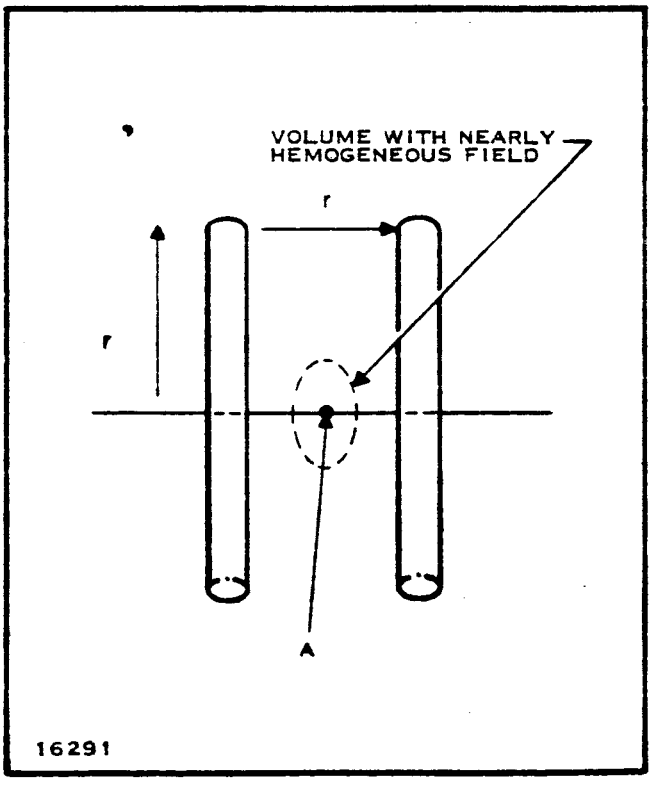


Figure 2-6. Helmholtz Coils, Side View

Henry: (RMKS)

The henry is the inductance of a closed circuit in which an electromotive force of 1 volt is produced when the electric current in the circuit varies uniformly at a rate of 1 ampere/second. Alternatively, it is the inductance of a circuit in which 1 ampere produces a flux linkage of 1 weber-turn. One henry (RMKS) is equal to $10^9$ CGS units (CGS-EMU).

Homogenous Field:

A homogeneous field is a field having the same magnitude and direction at all points within the region of homogeneity.

Horizontal Gradient:

The horizontal gradient is the rate of change of the earth's magnetic field with respect to position on the earth, or horizontal displacement.

Hysteresis:

When a ferromagnetic substance is subjected to a magnetic field, magnetic hysteresis causes the magnetic flux density to lag behind the magnetizing field. See also, "Hysteresis Loop," and Figure 2-11.

Hysteresis Loop:

A hysteresis loop is a plot of $|\bar{B}|$ versus $|\bar{H}|$ for a given material: i.e., a graph of magnetic flux density versus applied field intensity. The power losses in a magnetic circuit are proportional to the enclosed area of the hysteresis loop. In general, the term "hysteresis loop" is taken to mean a "normal" hysteresis loop for a material which has been symmetrically and cyclically magnetized. See Figure 2-11.

Inclusion, Magnetic:

See under Magnetic Inclusion.

Incremental Permeability:

See under Permeability (8).

Inductance, Mutual: M

See under Mutual Inductance.

Inductance, Self: L

See under Self Inductance.

Induction, Magnetic:

See under Magnetic Flux Density.

Induction, Saturation:

See under Saturation Flux Density.

Initial Magnetization Curve:

An initial magnetization curve is a plot of $|\bar{B}|$ versus $|\bar{H}|$ for an initially unmagnetized material. The magnetization curve passes through the origin of the B-H plane, but a hysteresis curve does not. See Figure 2-11b.

Intrinsic Flux:

See under Intrinsic Induction.

Intrinsic Induction: $\bar{B}_i$

$$\frac{\text{weber}}{\text{meter}^2} = \text{(RMKS); gauss (CGS-EMU)}$$

A ferromagnetic material offers a lower reluctance path to a magnetic field than does air. Thus, a given magnetic field intensity will produce a larger flux density in a ferromagnetic material than in air. The intrinsic induction is the vector difference between the magnetic flux density in a magnetic material and the magnetic flux density that would exist in a vacuum under the influence of the same applied field intensity. $\bar{B}_i$ is related to the flux density $\bar{B}$, the magnetic field intensity $\bar{H}$, and the magnetization $\bar{M}$ by

$$\bar{B}_i = \bar{B} - \mu_o\bar{H} = \mu_o\bar{M} \text{ (RMKS)}$$

where $\mu_o$ is the permeability of free space, and by

$$\bar{B}_i = \bar{B} - \bar{H} = 4\pi\,\bar{M} \text{ (CGS-ESU).}$$

The intrinsic induction is also called <u>intrinsic flux</u> and <u>ferric induction</u> in various texts. See also Magnetization.

Joule:

The joule is the MKS unit of energy.

$$1 \text{ joule} = 1 \text{ newton-meter} = 1\,\frac{\text{kilogram-meter}^2}{\text{second}^2}.$$

Kovar:

Alloy of approximately 15 percent cobalt, 31 percent nickel, and 54 percent iron. Kovar is useful in that its expansion characteristics are similar to those of glass into which it may be sealed. It is found in the hermetic glass-to-metal seals of many components, all of which are extremely ferromagnetic.

Lenz's Law:

Lenz's Law states that an induced electromotive force (emf) is directed so as to tend to oppose the cause producing it. For instance, if an emf is "caused" by a change in flux through a closed circuit, the current resulting from the emf will set up a flux of its own which will be directed opposite to the direction of change of the original flux. In other words, the induced emf will try to maintain a constant flux through the circuit.

Line of Flux:

A line of flux is a concept which permits the visualization of a magnetic field as lines of equal force or strength. Although the "lines" are imaginary, they are convenient for describing a magnetic field. Flux lines of magnetic circuits must always form closed loops. While the concept of lines of force or flux flowing and having directional properties is an advantage, it should be remembered that the idea is used for convenience only and the field is actually homogeneous. The direction of the flux lines yield the direction of the magnetic flux density ($\bar{B}$), and their density yields the magnitude of $\bar{B}$.

A line is a unit of magnetic flux (CGS-EMU) equal to 1 maxwell.

Magnetic Anomaly:

A magnetic anomaly is a distortion or irregularity in the earth's magnetic field due to the presence of another magnetic field.

Magnetic Constant:

See under Permeability (1).

Magnetic Field, Dynamic:

See under Dynamic Magnetic Field.

Magnetic Field Intensity: $\bar{H}$

$$\frac{\text{amp-turn}}{\text{meter}} \text{ (RMKS); oersted (CGS-EMU)}$$

A moving charge sets up a disturbance in the space surrounding it. This disturbance is known as the magnetic field. The intensity and direction of the magnetic field is denoted by the quantity $\bar{H}$. The magnetic field intensity is a measure of the ability of an electric current to produce magnetic flux density ($\bar{B}$) at a given point. $\bar{H}$ is related to the flux density $\bar{B}$ and the magnetization $\bar{M}$ by

$$\bar{H} = \frac{1}{\mu_o} \bar{B} - \bar{M} \text{ (RMKS)}$$

where $\mu_o$ is the permeability of free space and by

$$\bar{H} = \bar{B} - 4\pi \bar{M} \text{ (CGS-EMU).}$$

The magnetic field intensity is also called <u>magnetic field strength</u>, <u>magnetic intensity</u>, and <u>magnetizing force</u>

in various texts. These quantities are sometimes given as gilberts/cm = gauss (oersted). This appears primarily in older texts and is now outdated.

Magnetic Field, Static:

See under Static Magnetic Field.

Magnetic Field Strength:

See under Magnetic Field Intensity.

Magnetic Flux: $\Phi$

weber (RMKS); maxwell (CGS-EMU)

The total number of lines of induction threading through a surface is called the magnetic flux through the surface. In the special case of a uniform flux density, $\bar{B}$, normal to a plane area, $\bar{A}$, the flux $\Phi$ through A is:

$$\Phi = BA.$$

For an arbitrary area A composed of differential elements dA, the total flux through A is:

$$\Phi = \int_A \bar{B} \cdot \bar{n}\, dA = \int_A B \cos\theta\, dA$$

where $\bar{B}$ is the flux density and $\bar{n}$ is a unit vector directed normal to dA (Figure 2-7).

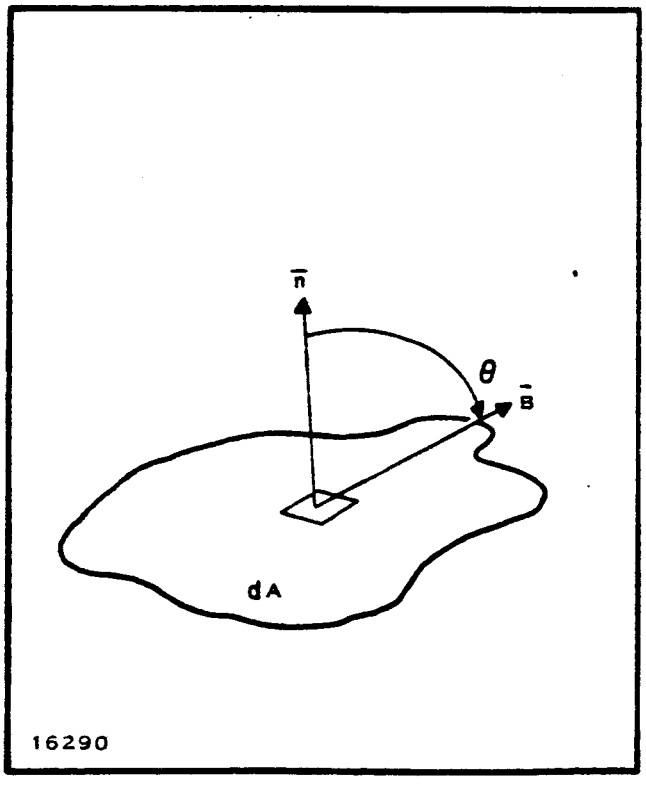


Figure 2-7. Magnetic Flux Through an Arbitrary Area

Magnetic Flux Density: $\bar{B}$

$\frac{\text{weber}}{\text{meter}^2}$ (RMKS); gauss (CGS-EMU)

The flux density, $\bar{B}$, is a vector describing the magnitude and direction of magnetic flux per unit area. $\bar{B}$ is related to the magnetic field $\bar{H}$ and the magnetization $\bar{M}$ by

$$\bar{B} = \mu_o (\bar{H} + \bar{M}) \text{ (RMKS)}$$

where

$\mu_o$ is the permeability of free space, or

$$\bar{B} = \bar{H} + 4\pi \bar{M} \quad \text{(CGS-EMU)}.$$

$\bar{B}$ is also known as the <u>magnetic induction.</u>

Magnetic Inclusion:

A magnetic inclusion is a small particle or region of a magnetic material in an otherwise homogeneous sample of nonmagnetic material.

Magnetic Induction:

See under Magnetic Flux Density.

Magnetic Intensity:

See under Magnetic Field Intensity.

Magnetic Loop Moment:

See under Dipole Moment.

Magnetic Moment Per Unit Volume:

See under Magnetization (1).

Magnetic Polarization:

See under Magnetization (1).

Magnetic Shielding (Material):

A magnetic shielding material is any of a number of high permeability materials(mumetal, permalloy, moly-permalloy, etc.) which may be used to confine a magnetic field to a certain region, e.g., to the walls of an enclosure bounded by the shielding material.

Magnetization: $\bar{M}$

$\frac{\text{amp-turn}}{\text{meter}}$ (RMKS); oersted (CGS-EMU)

1. The magnetization of a material is a measure of the degree to which the atomic dipole moments in the material are aligned with a magnetizing field. Specifically, magnetization is defined as the vector sum of the atomic dipole moments per unit volume at a physical point, i.e., the magnetic moment per unit volume or the magnetic polarization of the material. Magnetization, $\bar{M}$, is related to flux density, $\bar{B}$, and the field, $\bar{H}$, in a material by

$$\bar{M} = \frac{1}{\mu_o} \bar{B} - \bar{H} \quad \text{(RMKS)}$$

$$\bar{M} = \frac{\bar{B} - \bar{H}}{4\pi} \quad \text{(CGS-EMU).}$$

NOTE: In some technical publications, the name "magnetization" has been given to the quantities $\bar{J}$ or $\bar{\mathcal{P}} = \mu_o \bar{M}$ (RMKS) and $\bar{\mathfrak{J}} = 4\pi \bar{M}$ (CGS-EMU).

These are, of course, not the magnetic moment per unit volume, but that part of the flux density due to the material, i.e., the intrinsic induction.

2. The term "magnetization" may also be used in reference to the tendency of a material to retain a residual flux density ($B_r$) after exposure to a magnetizing field. The process of magnetization refers to placing an object in a unidirectional magnetic field in order to induce a residual flux density. This process is also known as perming, and the residual flux density may be called a perm.

Magnetizing Force:

See under Magnetic Field Inetnsity.

Magnetization Stability:

Magnetization stability refers to the tendency for a sample to retain both magnitude and direction of magnetization under varying magnetic and physical conditions such as vibration, changing temperature, and varying magnetic field. Also called perm stability.

Magnetometer, Flux Gate:

See under Flux Gate Magnetometer.

Magnetometer, Metastable Helium:

See under Metastable Helium Magnetometer.

Magnetometer, Proton Precession:

Operation of the proton precession magnetometer is based on the precession, or gyration, frequency of protons in a sample of distilled water (or a convenient hydrocarbon). This frequency is directly proportional to the total magnetic field. In practice, a strong polarizing field is applied to the sensor. When the field is switched off, the proton precession frequency is measured with a counter.

Magnetometer, Rubidium Vapor:

See under Rubidium Vapor Magnetometer.

Magnetometer, Torque:

See under Torque Magnetometer.

Magnetometer, Total Field:

See under Total Field Magnetometer.

Magnetometer, Vector:

See under Vector Magnetometer.

Magnetomotive Force: $F$, F, mmf

ampere-turn (RMKS); gilbert (CGS-EMU)

The magnetomotive force is the line integral of magnetic field intensity around any closed path. It is proportional to the net current linked with any closed path. An mmf of the coil system of an electromagnet, [illegible] is considered to be responsible for the magnetic flux through the magnetic circuit in the same way that the emf of a battery is responsible for the passage of current through an electric circuit.

Magnetostriction:

Magnetostriction is the tendency for a sample to change dimensions under the application of a magnetic field. This effect is quite small, being on the order of 0.004 percent of the length of a sample for nickel in a 1000 oersted field.

Maximum Flux Density: $B_m$

$\frac{\text{weber}}{\text{meter}^2}$ (RMKS); gauss (CGS-EMU)

The maximum magnetic flux density is the value of $\bar{B}$ at the tip of a hysteresis loop (Figure 2-11a).

Maximum Magnetic Field Intensity: $H_m$

$\frac{\text{ampere-turn}}{\text{meter}}$ (RMKS); oersted (CGS-EMU)

The maximum magnetic field intensity is the value of $\bar{H}$ at the tip of a hysteresis loop (Figure 2-11a).

Maximum Permeability:

See under Permeability (5).

Maxwell: (CGS-EMU)

The maxwell is the CGS unit of magnetic flux and is equal to one line of flux.

Metastable Helium Magnetometer:

The metastable helium magnetometer is based on the light absorption properties of optically-pumped helium due to Zeeman splitting of energy levels in the presence of a magnetic field. The degree of splitting is directly

proportional to the intensity of the total magnetic field. NOTE: A metastable helium magnetometer which yields vector field data has been developed for low field (space) measurements. It should not be confused with the above device.

Mutual Inductance: M

henry (RMKS); abhenry (CGS-EMU)

If two circuits are inductively coupled, the mutual induction (or coefficient of mutual induction) M, is defined as the ratio of the induced electromotive force, $e_2$, in one circuit to the rate of change of current, $dI_1/dt$, in the other.

$$M = -\frac{e_2}{dI_1/dt} .$$

If $e_2$ = 1 volt when $dI_1/dt$ = 1 amp/sec, then M = 1 henry. The symbol, M, a scalar, should not be confused with the symbol for magnetization, $\bar{M}$, a vector.

Netic:

Netic is a trade name (Perfection Mica Co.) for a medium permeability, high saturation induction alloy. Manufacturer's recommended application is for high-level magnetic shielding.

Newton:

The newton is the unit of force in RMKS units.

$$1 \text{ newton} = \frac{\text{kilogram-meter}}{\text{second}^2} .$$

Normal Hysteresis Loop:

See under Hysteresis Loop.

Normal Magnetization Curve:

If the tips of a series of hysteresis loops of increasing size, obtained with different values of maximum field intensity ($H_m$), are joined by a line, a normal magnetization curve results (Figure 2-11a). NOTE: The normal and initial magnetization curves do <u>not</u> coincide, even if their trend is generally the same.

Oersted: (CGS-EMU)

The oersted is the CGS unit of magnetic field intensity. If the field equation $\bar{B} = \mu_o (\bar{H} + 4\pi \bar{M})$ is considered for

a true nonmagnetic medium in which the permeability ($\mu_o$) is unity and the magnetization ($\bar{M}$) is zero, it becomes apparent that flux density ($\bar{B}$) and magnetic field intensity ($\bar{H}$) must be in equivalent units. In this case, the term "oersted" is often dropped and the term "gauss" applied to both flux density and field intensity.

**Paramagnetic, Paramagnetism:**

In a paramagnetic substance each atom possesses an intrinsic magnetic dipole moment due to unpaired electron spins. Under the influence of a magnetic field these moments will line up parallel to the field resulting in a net dipole moment per unit volume, or magnetization. This effect of alignment is known as paramagnetism. Paramagnetic substances are characterized by susceptibilities, $\chi_m$, in the range $o < \chi_m < 1$, and are weakly attracted by a magnet. If this effect is stong, i.e., there are many unpaired spins, the material is called ferromagnetic.

**Peak Permeability:**

See under Permeability (6).

**Perm:**

See under Magnetization (2) and Residual Flux Density.

**Perm Stability:**

See under Magnetization Stability.

**Permanent Magnet:**

A permanent magnet is a sample capable of retaining magnetization after the magnetizing field is removed. Materials used in permanent magnets are characterized by broad hysteresis loops (high-coercivity). Permanent magnets are also known as <u>hard magnets</u>.

**Permeability:**

$$\frac{\text{henrys}}{\text{meter}} \text{ (RMKS); unitless (CGS-EMU)}$$

Permeability is a general term used to express various relationships between changes in magnetic flux density ($\bar{B}$) and changes in magnetic field intensity ($\bar{H}$) under specified conditions.

1. Permeability of Free Space: $\mu_o$

The permeability of free space is a physical constant equal to the ratio of $|\bar{B}|$ to $|\bar{H}|$ in a vacuum or in air (free space).

$$\mu_o = 4\pi \times 10^{-7} \frac{\text{henrys}}{\text{meter}} \text{ (RMKS)}$$

$$= 1 \text{ (CGS-EMU)}$$

The permeability of free space is frequently called the <u>magnetic constant</u> and is represented by $\Gamma_m$.

2. Absolute Permeability:

The absolute permeability of a material is defined as the ratio of the flux density $\bar{B}$ in the material to the applied magnetic field intensity $\bar{H}$. It is usually referred to simply as the <u>permeability</u>.

$$\mu = \frac{|\bar{B}|}{|\bar{H}|}.$$

The physical significance of $\mu$ is most obvious when the CGS-EMU system is used in which $\bar{B}$ and $\bar{H}$ are in equivalent units such that, in free space,

$$\mu = \mu_o = \frac{|\bar{B}|}{|\bar{H}|} = 1.$$

In paramagnetic materials where $\bar{B}$ is greater than $\bar{H}$, $\mu > 1$, and $\mu < 1$ in diamagnetic materials in which $\bar{B}$ is less than $\bar{H}$. In ferromagnetic materials in which $\bar{B}$ is much larger than $\bar{H}$, $\mu >> 1$ but is not constant for changing magnetic conditions.

3. Relative Permeability: Unitless

$k_m$, $\mu_r$

Relative permeability is defined as the ratio of the permeability of a material ($\mu$) to the permeability of free space ($\mu_o$) and is related to the magnetic susceptibility ($X_m$) by

$$k_m = \frac{\mu}{\mu_o} = (1 + X_m) \text{ (RMKS)}$$

$$= (1 + 4\pi X_m) \text{ (CGS-EMU).}$$

The relative permeability of a given material is the ratio of the flux density produced in that material by a given value of magnetic field intensity to the flux density which would be produced in air (free space, where $\mu_o = 1$). The relative permeabilities of paramagnetic materials are greater than 1, and those of diamagnetic materials are less than 1. Materials with relative permeabilities greater than about 4 are considered ferromagnetic.

4. Normal Permeability: $\mu_n$

At any point on the normal magnetization curve of a material, the normal permeability is the ratio of the flux density and field intensity values corresponding to that point. In other words, it is the slope of the line drawn through the origin to the point on the normal magnetization curve. The normal permeability is also known as the static permeability.

5. Maximum Permeability: $\mu_m$

The maximum permeability is the largest value of the normal permeability obtained by varying the applied field intensity ($\bar{H}$).

6. Peak Permeability: $\mu_p$

The peak permeability is the ratio of the values of flux density and field intensity at the tip of a hysteresis loop of a symmetrically and cyclically magnetized material (Figure 2-11a). It is less than the maximum permeability.

7. Differential Permeability: $\mu_d$

The differential permeability is the absolute value of the slope of a hysteresis loop at any point; i.e., $\mu_d = d\bar{B}/d\bar{H}$.

8. Incremental Permeability: $\mu_\Delta$

If a fixed value of magnetic field intensity ($\bar{H}$) is changed by an increment $\Delta\bar{H}$, the incremental permeability is the ratio of the subsequent incremental change in flux

density $\Delta\bar{B}$ to the incremental change in $\bar{H}$; i.e.,

$$\mu_{\Delta} = \frac{\Delta\bar{B}}{\Delta\bar{H}} .$$

9. Effective Permeability: $\mu_e$

Effective permeability is the ratio of flux density to magnetic field intensity for special conditions which are not otherwise defined. For instance, if a magnetic material is placed in an alternating field of sufficiently high frequency, there may be appreciable skin effect losses. The term "effective permeability" would be useful in such circumstances. Effective permeability is sometimes used interchangeably with <u>incremental permeability</u>.

Permeability Curve:

A permeability curve is a plot of normal permeability ($\mu_n$) for a given material versus flux density in the material (Figure 1-9, Section I, Origin of Magnetic Effects). Consideration of permeability curves is very important in selecting materials for magnetic shielding.

Permeance: $P$, $\Lambda$

Permeance is a measure of the degree of ease with which magnetic flux is produced in a material. It is the reciprocal of reluctance.

Permeameter:

A permeameter is a magnetic circuit provided with magnetizing and test windings in which a test specimen can be inserted as part of the magnetic circuit. Permeameters are used in dc testing of ferromagnetic materials to obtain data from which normal magnetization curves and hysteresis loops can be plotted. An example is the <u>Fahy-Simplex permeameter</u> used for testing with magnetic field intensities up to 300 oersteds. See also Section V, Measurement Methods.

Physical Point:

A physical point is a small but finite volume which is generally defined as being large enough to contain a few atoms. It may be $10^{-25}$ meter$^3$ or smaller.

Pole, Magnetic:

The pole is the magnetic analog of electric charge. Although no free magnetic poles exist, the concept of a "pole" is a useful tool in simplifying certain problems.

Poles are either + (North) or − (South). Magnetic flux lines are directed, by convention, from south to north (Figure 2-8).

Pole Strength: $m_p$*

weber (RMKS); CGS units (CGS-EMU)

If a bar of magnetic material is axially magnetized, apparent 'poles' are formed at the ends. The pole strength, $m_p$, is given by

$$m_p = -\bar{M} \cdot \bar{A}$$

where

$\bar{M}$ = magnetization

and

$\bar{A}$ = area of end

for flat ends, or, more generally

$$m_p = -\int_A \bar{M} \cdot d\bar{A} = -\int_A M \cos\theta \, dA.$$

A unit CGS-EMU pole produces a field of 1 oersted at a distance of 1 cm.

*Not to be confused with dipole moment $\bar{m}$, which is a vector (Figure 2-9).

Potential, Magnetic: $\Omega$ (scalar)

ampere-turns (RMKS); gilberts or CGS units (CGS-EMU)

The magnetic potential, $\Omega$, is the magnetic analog of electric potential. If $\Omega$ is known, the magnetic field, $\bar{H}$, will be given by

$$\bar{H} = -\nabla \Omega .$$

This concept of a scalar potential for a magnetic field is applicable only in regions of zero current density.

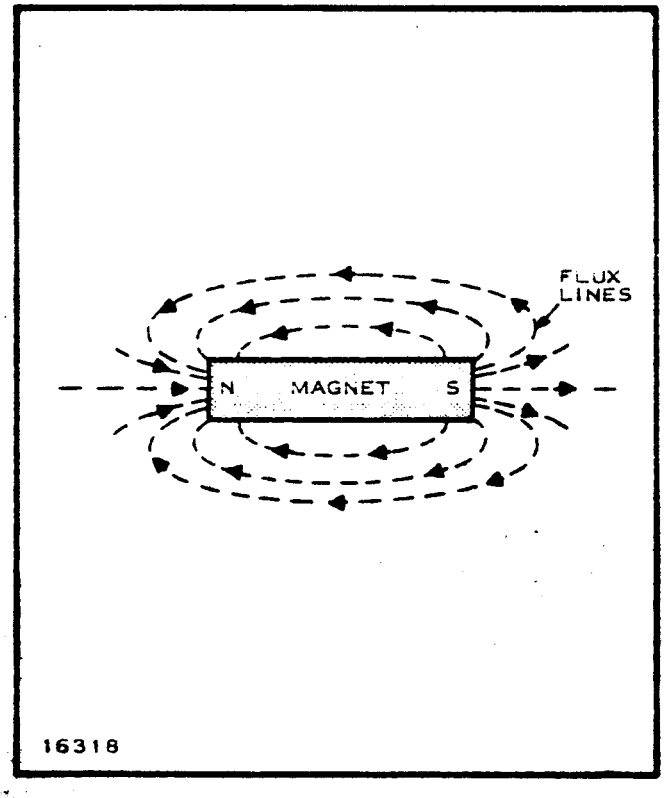


Figure 2-8. Magnetic Poles of a Bar Magnet

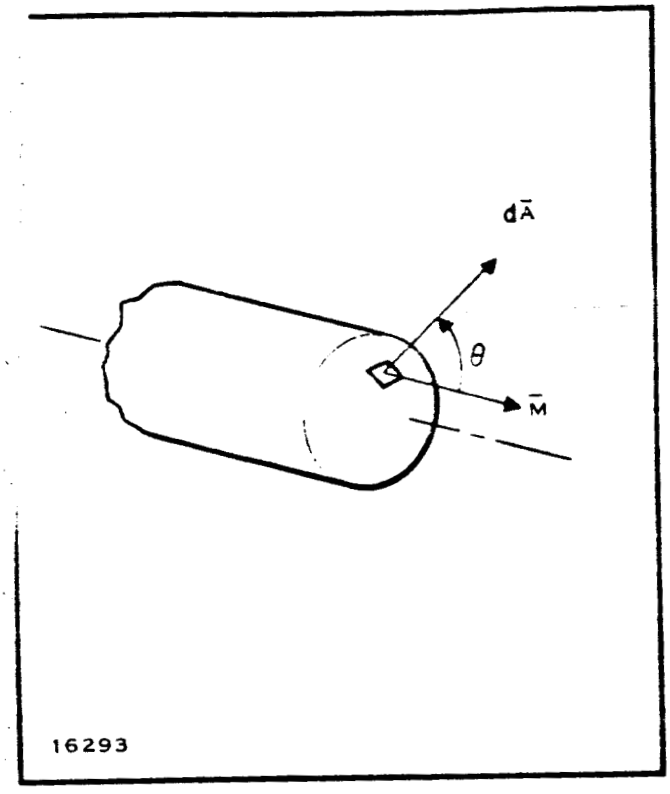


Figure 2-9. Pole Strength of a Bar Magnet

Potential, Vector: $\bar{A}$

For regions in which a current density exists, a scalar potential cannot describe a magnetic field. In such regions a vector potential, $\bar{A}$, may be used to express the flux density, $\bar{B}$, by

$$\bar{B} = \bar{\nabla} \times \bar{A}.$$

This will be seen in theoretical treatments of magnetic effects.

Pragilbert:

The pragilbert is the unit of magnetomotive force in the practical, nonrationalized MKS system and is equal to 10 gilberts (CGS-EMU). This term is no longer used but may occur in some pre-World War II texts.

Praoersted:

The praoersted is the unit of magnetic field intensity (H) in the practical, nonrationalized MKS system and is equal to 1000 oersteds (CGS-EMU). This term is no longer used but may occur in some pre-World War II texts.

Pseudo-Perm:

Pseudo-perm refers to the magnetic moment which may be induced in a substance due to neighboring ferromagnetic components.

Rationalized Units:

A rationalized system of units is one in which a factor of $4\pi$ is absorbed in the permeability, $\mu$, and the dielectric constant, $\epsilon$, so that this factor of $4\pi$ does not appear in Maxwell's equations. Thus, $\mu_o = 10^{-7}$ in the nonrationalized MKS system and $4\pi \times 10^{-7}$ in the rationalized MKS system (RMKS).

For example, the equation for the curl of a magnetic field in rationalized MKS units, is

$$\nabla \times \bar{H} = \bar{J} \quad \text{(RMKS)}$$

where

$\bar{J}$ is the current density.

In the unrationalized CGS electrostatic, units, this equation becomes

$$\nabla \times \bar{H} = 4\pi \bar{J} \quad \text{(CGS-EMU)}$$

Relative Permeability:

See under Permeability (3).

Reluctance: $\mathcal{R}$

$$\frac{\text{ampere-turn}}{\text{weber}} \text{ (RMKS)}; \frac{\text{gilbert}}{\text{maxwell}} \text{ (CGS-EMU)}.$$

Reluctance is a measure of the difficulty with which magnetic flux is produced in a circuit, i.e., the opposition offered by a material to magnetic flux. This is the magnetic equivalent of resistance in an electrical circuit. For a magnetic circuit element of length $\ell$, flux $\Phi$, and field $\bar{H}$, the reluctance, $\mathcal{R}$, is

$$\mathcal{R} = \frac{\bar{H}\ell}{\Phi}$$

or, if A is the cross-sectional area of the element and $\mu$ is its permeability

$$\mathcal{R} = \frac{\ell}{\mu A}.$$

Reluctivity: $\nu$

$$\frac{\text{meter}}{\text{henry}} \text{ (RMKS)}; \text{ unitless (CGS-EMU)}.$$

Reluctivity, or specific reluctance, is the reciprocal of the absolute permeability ($\mu$).

Remanence: $M_{rs}$

$$\frac{\text{ampere-turn}}{\text{meter}} \text{ (RMKS)}, \text{ oersted (CGS-EMU)}$$

If a magnetic field intensity sufficiently strong to produce <u>saturation</u> is applied to a ferromagnetic material,

the value of the residual magnetization remaining when the field is removed is called the remanence. Remanence is thus the maximum value of the residual magnetization. The magnitude of the remanence can be computed from the equations

$$\bar{B} = \mu_o (\bar{H} + \bar{M}) \quad \text{(RMKS)}$$

and

$$\bar{B} = \bar{H} + 4\pi \bar{M} \quad \text{(CGS-EMU)}$$

for the condition where $|\bar{B}| = B_{rs}$, the retentivity of the material, and $\bar{H} = 0$. Thus

$$M_{rs} = \frac{B_{rs}}{\mu_o} \quad \text{(RMKS)}$$

$$= \frac{B_{rs}}{4\pi} \quad \text{(CGS-EMU)}.$$

NOTE: Most texts erroneously state or imply that remanence refers to and is the same as retentivity. Many texts fail to make clear that remanence is defined <u>only</u> for a material which has been magnetized to <u>saturation</u>. It is important to note these errors in usage. See also Retentivity and Figure 2-11b.

**Residual Flux Density: $B_r$**

$\frac{\text{weber}}{\text{meter}^2}$ (RMKS); gauss (CGS-EMU)

The residual flux density is that value of flux density ($\bar{B}$) which remains in a ferromagnetic sample after the applied magnetic field intensity has been reduced to zero. The magnitude of $B_r$ can be computed from the equations:

$$\bar{B} = \mu_o (\bar{H} + \bar{M}) \quad \text{(RMKS)}$$

and

$$\bar{B} = \bar{H} + 4\pi \bar{M} \quad \text{(CGS-EMU)}$$

for the condition where $\bar{H} = 0$ and $|\bar{M}| = M_r$, the residual magnetization. Thus

$$B_r = \mu_o M_r \quad \text{(RMKS)}$$

$$= 4\pi M_r \quad \text{(CGS-EMU)}.$$

The residual flux density is also known as the <u>residual induction</u>. See also Figure 2-11a.

**Residual Induction:**

**See under Residual Flux Density.**

Residual Magnetization: $M_r$

$\frac{\text{ampere-turn}}{\text{meter}}$ (RMKS); oersted (CGS-EMU)

The residual magnetization is that value of magnetization ($\bar{M}$) which remains in a ferromagnetic sample after the applied magnetic field intensity ($\bar{H}$) has been reduced to zero. The magnitude of $M_r$ can be computed from the equations

$$\bar{B} = \mu_o (\bar{H} + \bar{M}) \quad \text{(RMKS)}$$

and

$$\bar{B} = \bar{H} + 4\pi \bar{M} \quad \text{(CGS-EMU)}$$

for the condition in which $\bar{H} = 0$ and $|\bar{B}| = B_r$, the residual flux density. Thus,

$$M_r = \frac{B_r}{\mu_o} \quad \text{(RMKS)}$$

$$= \frac{B_r}{4\pi} \quad \text{(CGS-EMU).}$$

**Retentivity: $B_{rs}$**

$\frac{\text{weber}}{\text{meter}^2}$ (RMKS); gauss (CGS-EMU)

If a magnetic field intensity ($\bar{H}$) sufficiently strong to produce <u>saturation</u> is applied to a ferromagnetic material, the value of the residual flux density which remains when the field is removed is called the retentivity. The retentivity is thus the maximum value of the residual flux density for a given material. The magnitude of the retentivity can be computed from the equations

$$\bar{B} = \mu_o (\bar{H} + \bar{M}) \quad \text{(RMKS)}$$

and

$$\bar{B} = \bar{H} + 4\pi \bar{M} \quad \text{(CGS-EMU)}$$

for the condition where $\bar{H} = 0$ and $|\bar{M}| = M_{rs}$, the remanence of the material. Thus,

$$B_{rs} = \mu_o M_{rs} \quad \text{(RMKS)}$$

$$= 4\pi M_{rs} \quad \text{(CGS-EMU).}$$

Note: The same comments on misuse of the term <u>remanence</u> apply to retentivity. See also Figure 2-11b.

Rubidium Vapor Magnetometer:

The rubidium vapor magnetometer is based on the anomalous Zeeman splitting of optically pumped rubidium energy levels in the presence of a magnetic field. It is similar in theory to the metastable helium magnetometer.

Saturation Flux Density: $B_s$

$\frac{\text{weber}}{\text{meter}^2}$ (RMKS); gauss (CGS-EMU)

The saturation flux density of the value of $|\bar{B}|$ at the tip of the saturation hysteresis loop (Figure 2-11b). For a first approximation, $B_s$ is the maximum value of magnetic flux density possible in a given ferromagnetic material, although $\bar{B}$ linearly increases very slightly with increasing magnetic field intensity ($\bar{H}$). $B_s$ is also called the <u>saturation induction</u>.

Saturation Hysteresis Loop:

The saturation hysteresis loop is a graph of magnetic flux density versus applied field intensity for a material which has been symmetrically and cyclically magnetized to saturation. See also Hysteresis Loop.

Saturation Induction:

See under Saturation Flux Density.

Saturation Magnetic Field Intensity: $H_s$

$\frac{\text{ampere-turn}}{\text{meter}}$ (RMKS); oersted (CGS-EMU)

The saturation flux density is the value of $|\bar{H}|$ at the tip of a saturation hysteresis loop (Figure 2-11b).

Saturation Magnetization: $M_s$

$\frac{\text{ampere-turn}}{\text{meter}}$ (RMKS); oersted (CGS-EMU)

The saturation magnetization is the value of $|\bar{M}|$ corresponding to $B_s$ and $H_s$ at the tip of a saturation hysteresis loop and is the maximum value of magnetization for the material. For increasing values of magnetic field intensity beyond $H_s$, the magnetization remains constant at $M_s$. All further increase in flux density is therefore a linear function of field intensity.

Self Inductance: L

henry (RMKS); abhenry (CGS-EMU)

The self-inductance, L, of a coil, or other such inductive element, is defined as the ratio of the electromotive force, e, developed across the coil to the rate of change of current in the coil; i.e.,

$$L = -\frac{e}{dI/dt} .$$

If e = 1 volt when dI/dt = 1 amp/sec, then L = 1 henry may also be represented in terms of the flux, $\Phi$, through the coil by

$$L = \frac{n\Phi}{I}$$

where n is the number of turns and I is the current through the coil.

Skin Depth, Magnetic: S meter (RMKS) cm (CGS)

Magnetic skin depth is a measure of the penetration of the surface field into the interior of a material. This is usually expressed (in CGS units) as

$$S = \frac{1}{2\pi\sqrt{\frac{\mu f}{\rho}}} .$$

where S is skin depth, $\mu$ is permeability, f is the frequency of the applied field (sinusoidal), and $\rho$ is the resistivity of the material.

Soft Magnet:

See under Temporary Magnet.

Static Magnetic Field:

A static magnetic field is a nonvarying magnetic field. This term is sometimes applied (incorrectly) to a very slowly varying field, such as the earth's magnetic field.

Static Permeability:

See under Permeability (4).

Susceptibility: $\chi_m$, k Unitless

Susceptibility is defined as the ratio of magnetization $\bar{M}$ of a material to applied field $\bar{H}$: i.e.,

$$\chi_m = \frac{\bar{M}}{\bar{H}} .$$

[illegible] the material [illegible] H. In ferromagnetic substances [illegible] and so the definition is generalized to

$$\chi_{m} = \frac{\partial M}{\partial H} .$$

Symmetrical and Cyclical Magnetization:

A material is said to be in a symmetrical and cyclical magnetized condition when, under the influence of [illegible] field intensity (H) [illegible] positive and negative limits, its [illegible] are both identical and symmetrical with respect to the origin of the axes.

Temporary Magnet:

A temporary magnet is a substance which [illegible] degree of magnetization after magnetizing [illegible] removed. Materials used in temporary magnets are characterized by narrow hysteresis loops (low coercivity). Temporary magnets are also known as <u>soft magnets</u>.

Toroid:

A toroid is a doughnut or inner-tube shaped coil or coil form with circular or rectangular cross-section (Figure 2-10).

Torque Magnetometer:

A torque magnetometer is one which uses the torque on a magnetic moment of known value as the field-determining process. Such instruments are [illegible] quite fragile and lack [illegible] in sensitivity [illegible] flux-gate, helium, and rubidium magnetometers.

Total Field Magnetometer

A total field magnetometer measures the total value of the magnetic field regardless of the direction of the field in relation to the magnetometer. The rubidium vapor, proton precession, and metastable helium magnetometers are examples of total field devices.

Unit Pole:

A unit pole is defined as one which will repel an equal and similar pole placed 1 centimeter away in a vacuum with a force of one dyne. The pole strength of a unit pole is 1 CGS unit (or 1 EMU).

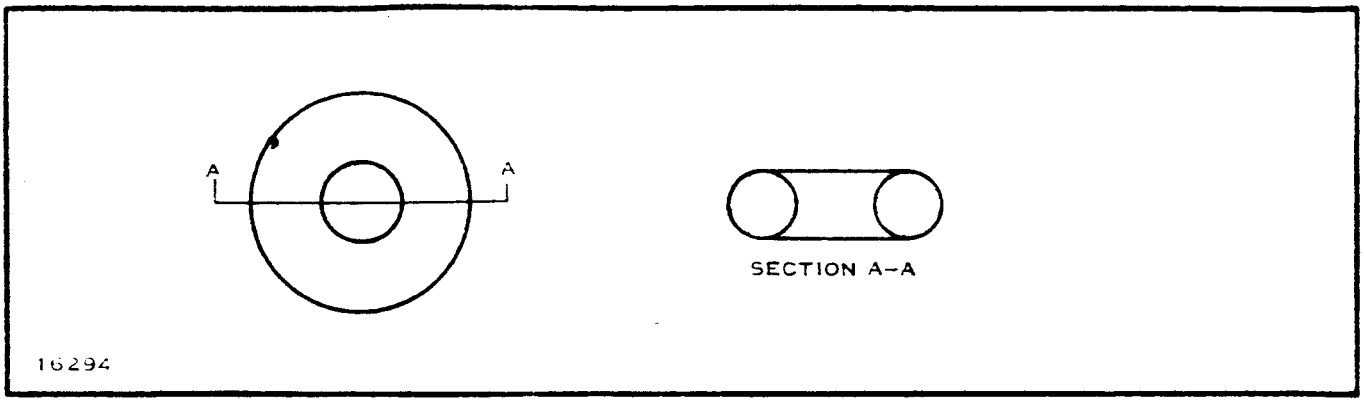


Figure 2-10. Toroid, Circular Cross Section.

Vector Magnetometer:

A vector magnetometer is one which measures only the component of the magnetic field in the direction of the sensitive axis of the magnetometer. The flux-gate magnetometer is an example of a vector device.

Vertical Gradient:

The vertical gradient is the rate of change of the earth's magnetic field, with respect to vertical displacement.

Volt: (RMKS)

The volt is the potential difference between two points on a conducting wire carrying a current of 1 ampere when the power dissipated between these points is 1 watt.

Weber: (RMKS)

The weber is that magnetic flux which, linking [illegible] one turn, produces in it an electromotive force of 1 volt as the flux is reduced to zero at a uniform rate in 1 second.

Zeeman Effect:

The Zeeman effect is the splitting of electronic energy levels into several symmetrically disposed sublevels under the influence of a magnetic field. Unless otherwise specified, the term refers to the anomalous rather than the normal Zeeman effect. The normal Zeeman effect predicts a splitting of a level into a center frequency and two sidebands. The anomalous Zeeman effect includes consideration of intrinsic electron spins and thus provides a more complete description of the many sublevels which may occur.

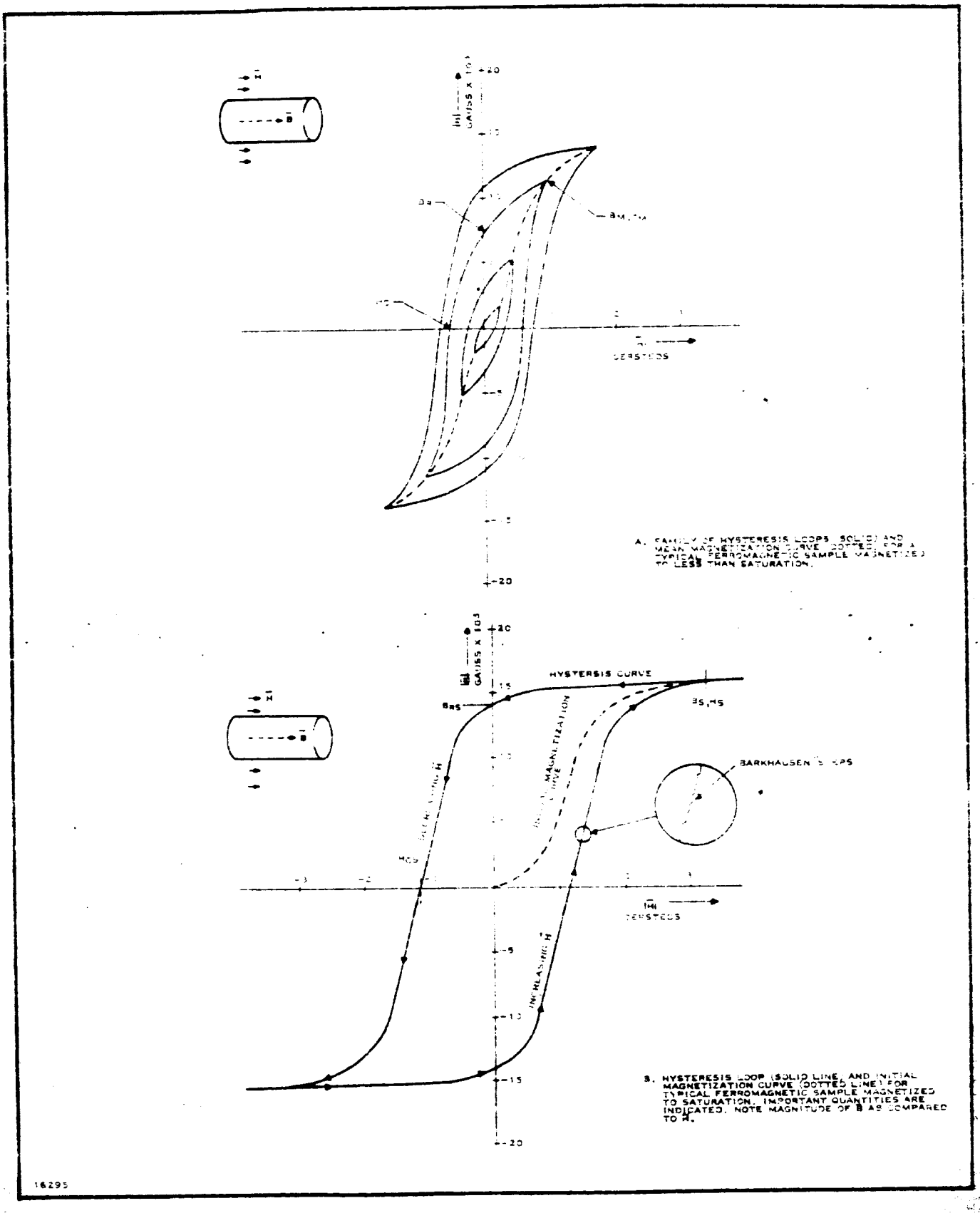


Figure 2-11. Magnetization Curves and Hysteresis Loops

D. SYMBOLS

| Symbol | Quantity |
|---|---|
| $A$ | Area |
| $A_{eff}$ | Effective area |
| $\bar{A}$ | Magnetic vector potential: vector area |
| $B_m$ | Maximum value of flux density (on a hysteresis loop) |
| $B_r$ | Residual flux density: radial component of $\bar{B}$ |
| $B_{rs}$ | Retentivity |
| $B_s$ | Saturation flux density (saturation value of $B_m$) |
| $B_\theta$ | Tangential component of $\bar{B}$ |
| $\bar{B}$ | Magnetic flux density (induction) |
| $\bar{B}_i$ | Intrinsic induction |
| $D$ | Demagnetizing factor |
| $\bar{D}$ | Displacement vector |
| $\mathcal{E}$ | Electromotive force |
| $\bar{E}$ | Electric field intensity |
| $e$ | Electromotive force |
| $F$ | Magnetomotive force |
| $H_c$ | Coercive force |
| $H_{cs}$ | Coercivity |
| $\bar{H}_d$ | Demagnetizing field intensity |
| $H_m$ | Maximum value of magnetic field intensity (on a hysteresis loop) |
| $H_s$ | Saturation magnetic field intensity (saturation value of $H_m$) |
| $\bar{H}$ | Magnetic field intensity |
| $I$ | Current |
| $\bar{I}$ | Magnetization |
| | Magnetization ( $= 4\pi\bar{I}$ ) |
| $\bar{J}$ | Current density |
| $k_m$ | Relative permeability |

| Symbol | Quantity |
|---|---|
| $L$ | Inductance |
| $\ell$ | Length |
| $M$ | Mutual inductance |
| $M_{rs}$ | Remanence |
| $M_r$ | Residual magnetization |
| $\bar{M}$ | Magnetization |
| $\mathfrak{M}$ | Magnetization ( $\mathfrak{M} = \mu_o \bar{M}$ ) |
| $m_p$ | Magnetic pole strength |
| $\bar{m}$ | Magnetic dipole moment |
| $n$ | Number of items |
| $\bar{n}$ | Unit vector |
| $\bar{P}$ | Electric polarization |
| $\bar{p}_m$ | Magnetic dipole moment ($\bar{p}_m = \mu_o \bar{m}$) |
| $\mathcal{P}$ | Permeance |
| $Q$ | Electric charge |
| $\mathcal{R}$ | Reluctance |
| $S$ | Skin depth |
| $T$ | Temperature |
| $T_c$ | Curie temperature |
| $\gamma$ | Magnetic field strength |
| $\Delta$ | Vector operator |
| $\epsilon$ | Permittivity of material |
| $\epsilon_o$ | Permittivity of free space |
| $\theta$ | Angle |
| $\mu$ | Permeability of material |
| $\mu_o$ | Permeability of free space |
| $\nu$ | Reluctivity |
| $\pi$ | 3.14159 |
| $\rho$ | Charge density: resistivity |
| $\Phi$ | Magnetic flux |

| Symbol | Quantity |
| --- | --- |
| $\phi$ | Angle, electrostatic potential |
| $\chi_m$ | Magnetic susceptibility |
| $\Omega$ | Magnetic scalar potential |
| $\Gamma_m$ | Magnetic constant |
| $\Lambda$ | Permeance |

## SECTION III

## UNIT SYSTEMS AND CONVERSION TABLES

### A. INTRODUCTION

The problem of units is one of the most confusing and troublesome areas encountered in a study of magnetism and magnetic phenomena. Determination of the terminology used in magnetism has been in a state of transition for many years, and it does not appear that the problem will soon be settled to the mutual satisfaction of all concerned. Choose a half-dozen books or articles at random and a different system of notation may be found in each; but all have something in their favor. Many authors recognize the fact that, no matter which system they adopt for their own works, the reader would certainly encounter different systems of units in other references. The problem is further compounded by the preferrential usage of different systems by physicists, power engineers, electronics engineers, and those working in geomagnetics. Standards committees of the professional societies of these groups each praise the merits of their preferred system.

We cannot hope to resolve this situation in this handbook, nor will a preference be given for any one system. However, since a choice must be made, all terms have been given in both rationalized meter-kilogram-second (RMKS) units and in unrationalized centimeter-gram-second electromagnetic (CGS-EMU) units. The formulas are given exclusively in the CGS-EMU system for reasons to be discussed in the next section.

### B. HISTORICAL DEVELOPMENT OF UNITS SYSTEMS*

Although observations of electrostatic phenomena date back to the time of Homer, the first recorded scientific study of magnetism did not occur until the 16th century, when Gilbert studied the forces due to permanent magnets. Electro-magnetism was born when Coulomb, in 1789, demonstrated that the forces between static charges and magnetic poles both obeyed the inverse-square law. At that time it is likely that his work was reported in the existing unit system of classical mechanics.

There are no fundamental constants inherent in the mathematical theories of classical mechanics. If a mass-length-time (MLT) system of units is chosen, it can be proved that all physical laws in classical mechanics "scale" perfectly for any change in parameters over an arbitrary range of magnitudes. Such a system is still used in quantum mechanical calculations by defining the velocity

---

*Two of the better discussions on this subject are contained in Principles of Electricity by Pugh and Pugh (Reference 2) and Electromagnetic Theory by Stratton (Reference 7).

of light in vacuum, c, and Planck's constant, h, are equal to unity. This system is known as the "natural" system of units and is of interest to electromagnetics solely for its historical value.

Electromagnetic theory differs from classical mechanics by the fact that the velocity of light in vacuum appears as a fundamental constant of the theory and cannot be set equal to unity. This leaves two possibilities: a constant in one of the equations relating mechanical (MLT) and electromagnetic quantities can arbitrarily be set equal to unity, or, if this is not done, one of the electrical units may be arbitrarily chosen and assigned a dimension. The second alternative yields a four-dimensional system of units—mass, length, time, and an electrical unit.

Coulomb's discovery made possible the parallel development of the laws of electrostatics and magnetostatics in the 19th century. During this period scientists sought to relate these laws to the fundamental dimensions of mechanics with an "absolute" system of units, one in which every quantity may be expressed in terms of mass, length, and time. In searching for a single system of units which could properly be called "the absolute system," scientists had developed a number of systems all based on the centimeter, gram, and second as units of length, mass, and time. Having established such a CGS system for use in mechanics, they set about extending this system to the more recently discovered laws of electrostatics and magnetostatics. It was soon realized that two different systems were emerging, each of which had equally good claims to the term "absolute."

Maxwell's field equations yielded the relationship

$$c = \frac{1}{\sqrt{\epsilon_o \mu_o}}$$

where $\epsilon_o$ is the dielectric constant or permittivity of a vacuum in electrostatic equations and $\mu_o$ is the permeability of a vacuum in magnetostatics. Precise measurements showed that when experiments were conducted in any medium other than a vacuum, the results depended upon this medium. Since c had been chosen equal to unity in the "natural" CGS system, the above relationship was satisfied by arbitrarily choosing $\epsilon_o$ and $\mu_o = 1$ in a vacuum. This led to the use of a centimeter-gram-second-electrostatic unit (CGS-ESU) system for electrostatics and a centimeter-gram-second-electromagnetic unit (CGS-EMU) system for magnetostatics. When the speed of light was experimentally determined as approximately $3 \times 10^{10}$ centimeters per second, it was no longer possible to set both $\epsilon_o$ and $\mu_o = 1$ in any one unit system. Most textbooks written before World War II therefore used one system for electrostatics and the other system for electromagnetics, despite the fact that units of the same quantity are not of the same magnitude in the two systems.

Originally, no names were assigned for units either in the CGS-ESU or the CGS-EMU. This was probably due to the fact that each was considered to be an absolute system of fundamental dimensions. To further compound the

problem, the electric power industry adopted a third (and somewhat modified) CGS system in the latter part of the 19th century. The system they adopted was called the "practical" system because the magnitudes of the various units were selected to be more useful in the practical problems of the day than were the CGS units used by scientists.

Some of the confusion was removed in the 1930's by assigning names to the units in each of the CGS systems. Because the practical units were obtained by multiplying the corresponding units in the CGS-EMU system by powers of ten, the CGS-EMU system was considered to be the absolute system, whose units should be the absolute ampere, the absolute ohm, the absolute volt, etc. The names actually chosen and used for these quantities in the CGS-EMU were the practical units with the prefix ab, i.e., abampere, abvolt, abohm, etc. The prefix stat (for electrostatic) was used to identify the CGS-ESU units in a similar manner, yielding statampere, statvolt, statohm, etc.

Still another CGS system came about through a suggestion by Gauss which permitted the combination of the CGS-EMU and CGS-ESU systems into one system. The Gaussian system of units is obtained by using the electrical quantities from the CGS-ESU system and the magnetic quantities from the CGS-EMU system. This system is now the one most commonly used in studies of theoretical physics.

A further refinement of the Gaussian system results in the Heaviside-Lorentz system. This refinement, called rationalization, involves the substitution of the expression for the area of a sphere, $4\pi r^2$, for the $r^2$ term in the denominator of the equations of Coulomb's law and of the Biot-Savart law for the field of an arbitrary conductor of differential length ($dH = I\, dl \sin\theta / cr^2$, in the Gaussian system). The object of rationalization is to transfer the factor $4\pi$ from linear equations to those having circular symmetry. While at first glance this may seem to make some equations more complicated, it does remove the factor $4\pi$ from many frequently used equations. This development was important because it lead to a system of rationalized rather than unrationalized meter-kilogram-second units.

In 1901, Giorgi followed up an idea of Maxwell's by calling attention to the fact that the "practical" system could be converted into an absolute system by an appropriate choice of fundamental units. He suggested the international meter, the kilogram, and the second, and, as a fourth quantity, any electrical quantity from the practical system such as the coulomb, the ampere, or the ohm. Such a system is called an MKS system. The derived quantities of such a system have the same relationship to each other as those of the "practical" system and may, therefore, be expressed in practical units. In particular, it was found that $\mu_o$ must have the value $4\pi \times 10^{-7}$ henries per meter. $\epsilon_o$ is then computed from the relationship between c, $\epsilon_o$, and $\mu_o$ given earlier.

In June 1935, the International Electrotechnical Commission (IEC) unanimously adopted Giorgi's absolute MKS system and also recommended that the system be rationalized. The IEC has subsequently chosen electric current I

as the fourth dimension. The result is the widely-used rationalized MKS (RMKS) system. It should be mentioned in passing that an unrationalized MKS system does exist but is very seldom used. As commonly used, the CGS-EMU and CGS-ESU systems are always unrationalized. The CGS-ESU system is of little importance in the area of magnetic measurements and will not be discussed further in this handbook.

There is considerable feeling at present that the rationalized MKS system will eventually receive world-wide adoption. It is already widely used in much scientific literature. There is certainly a great deal in its favor to recommend adoption. Many of the units of the RMKS system have the "practical" system names with which most engineers are familiar. Use of the RMKS system provides considerable simplification in many of the equations of electromagnetic theory. And finally, the RMKS system removes the ambiguity between units of flux density ($\bar{B}$) and field intensity ($\bar{H}$) in the CGS-EMU system caused by letting the permeability ($\mu$) be equal to unity.

In areas of high-field magnetic studies such as transformer design, one will find both the RMKS and CGS-EMU systems used in the literature. The area of low-field magnetic studies such as electronic component and material magnetism measurements, however, has evolved primarily from the science of geomagnetics. The literature in this field uses the CGS-EMU system almost exclusively, with formulas and results being given in terms of gammas and CGS units. These units are much more convenient in low-field work than micro-ampere-turns per meter or weber-meters, although these RMKS units could be used. For these reasons, the formulas in Section IV have been given in the CGS-EMU system. The conversion tables which follow will permit the reader to convert his results to RMKS if this is desirable or necessary.

## C. USE OF THE CONVERSION TABLES

There are nearly as many ways to set up conversion tables as there are unit systems. Many of the tables tend to cause more confusion than they eliminate. The following tables are provided as an aid to rapid conversion between the two unit systems most commonly used in studies of magnetic effects. The tables are constructed so that the reader need only perform a multiplication to convert a quantity in one system to an equivalent quantity in the other. Note: There is an apparent contradiction in the conversion factors between RMKS and CGS-EMU units for magnetic field intensity ($\bar{H}$) and magnetization ($\bar{M}$). For $\bar{H}$, 1 ampere-turn/meter (RMKS) = $4\pi \times 10^{-3}$ oersted (CGS-EMU), while for $\bar{M}$, 1 ampere-turn/meter = $10^{-3}$ oersted (CGS-EMU). This anomaly arises from the fact that the RMKS is a <u>rationalized</u> system whereas the CGS-EMU is an <u>unrationalized</u> system. Since $\bar{B} = \mu_o (\bar{H} + \bar{M})$ in the RMKS system and $\bar{B} = \bar{H} + 4\pi \bar{M}$ in the CGS-EMU system, we must retain the difference in conversion factors to retain the definition of $\bar{M}$ and not confuse it with $4\pi \bar{M}$ (the intrinsic induction). This problem might become significant in a detailed study of ferromagnetic properties of materials but should cause no difficulty for more common low-field design and measurement problems.

## Table 1. RMKS to CGS-EMU

| Quantity | Symbol | Multiply the Number of RMKS Units in This Column | By | To Obtain the Number of CGS-EMU Units in This Column |
|---|---|---|---|---|
| Length | $\ell$ | Meters | $10^2$ | Centimeters |
| Area | A | Square meters | $10^4$ | Square centimeters |
| Mass | m | Kilograms | $10^3$ | Grams |
| Time | t | Seconds | 1 | Seconds |
| Force | F | Newtons | $10^5$ | Dynes |
| Energy, Work | W | Joules | $10^7$ | Ergs |
| Power | P | Watts | $10^7$ | Ergs/second |
| Electric Charge | q | Coulombs | $10^{-1}$ | Abcoulombs |
| Electromotive Force | e, d, emf | Volts | $10^8$ | Abvolts |
| Current | I | Amperes | $10^{-1}$ | Abamperes |
| Current Density | $\bar{J}$ | Amperes/meter$^2$ | $10^{-5}$ | Abamperes/centimeter$^2$ |
| Resistance | R | Ohms | $10^9$ | Abohms |
| Capacitance | C | Farads | $10^{-9}$ | Abfarads |
| Inductance | L | Henries | $10^9$ | Abhenries |
| Resistivity | $\rho$ | Ohm-meters | $10^{11}$ | Abohm-centimeters |
| Magnetic Pole Strength | $m_p$ | Webers, or ampere-turn-meters | $10^8/4\pi = 7.9[illegible] \times 10^7$ | CGS units |
| Magnetic Dipole Moment | $\bar{m}$ | Weber-meters, or ampere-turn-meter$^2$ | $10^{10}/4\pi = 7.9[illegible] \times 10^8$ | CGS units |
| Magnetic Flux | $\Phi$ | Webers | $10^8$ | Maxwells or lines |
| Magnetic Flux Density | $\bar{B}$ | Webers/meter$^2$ | $10^4$ | Gauss, lines/centimeter$^2$ |
| Magnetic Field Intensity | $\bar{H}$ | Ampere-turns/meter | $4\pi/10^3 = 1.2[illegible] \times 10^{-[illegible]}$ | Oersted |
| Magnetization | $\bar{M}$ | Ampere-turns/meter | $10^{-[illegible]}$ | Oersted |
| Magnetomotive Force | F, mmf | Ampere-turns | $4\pi/10^1 = 1.2[illegible]$ | Gilberts |
| Magnetic Scalar Potential | $\Omega$ | Ampere-turns | $4\pi/10^1 = 1.2[illegible]$ | Gilberts |
| Permeability | $\mu$ | Henries/meter | $10^7/4\pi = 7.9[illegible] \times 10^5$ | (unitless) |

* When $\mu_0 = 1$ (CGS-EMU), 1 gamma = $10^{-5}$ gauss = $10^{-5}$ oersted = $10^{-9}$ weber/meter$^2$.

** See Note at end of Paragraph C

## Table II. CGS-EMU to RMKS

| Quantity | Symbol | Multiply the Number of CGS-EMU Units in This Column | By | To Obtain the Number of RMKS Units in This Column |
|---|---|---|---|---|
| Length | $\ell$ | Centimeters | $10^{-2}$ | Meters |
| Area | A | Square centimeters | $10^{-4}$ | Square meters |
| Mass | m | Grams | $10^{-3}$ | Kilograms |
| Time | t | Seconds | 1 | Seconds |
| Force | F | Dynes | $10^{-5}$ | Newtons |
| Energy, Work | W | Ergs | $10^{-7}$ | Joules |
| Power | P | Ergs/second | $10^{-7}$ | Watts |
| Electric Charge | q | Abcoulombs | 10 | Coulombs |
| Electromotive Force | e, $\mathcal{E}$, emf | Abvolts | $10^{-8}$ | Volts |
| Current | I | Abamperes | 10 | Amperes |
| Current Density | $\bar{J}$ | Abamperes/centimeter$^2$ | $10^5$ | Amperes/meter$^2$ |
| Resistance | R | Abohms | $10^{-9}$ | Ohms |
| Capacitance | C | Abfarads | $10^9$ | Farads |
| Inductance | L | Abhenries | $10^{-9}$ | Henries |
| Resistivity | $\rho$ | Abohm-centimeters | $10^{-11}$ | Ohm-meters |
| Magnetic Pole Strength | $m_p$ | CGS units | $4\pi/10^8 = 1.257 \times 10^{-7}$ | Webers, or ampere-turn-meters |
| Magnetic Dipole Moment | $\bar{m}$ | CGS units | $4\pi/10^{10} = 1.257 \times 10^{-9}$ | weber-meters, or ampere-turn-meter$^2$ |
| Magnetic Flux | $\Phi$ | Maxwells or line | $10^{-8}$ | Webers |
| Magnetic Flux Density | $\bar{B}$ | Gausses*, or lines/centimeter$^2$ | $10^{-4}$ | Webers/meter$^2$ |
| Magnetic Field Intensity | $\bar{H}$ | Oersteds | $10^3/4\pi = 7.958 \times 10^1$ | Ampere-turns/meter |
| Magnetization | $\bar{M}$ | Oersteds | $10^3/4\pi$** | Ampere-turns/meter |
| Magnetomotive Force | F, mmf | Gilberts | $10/4\pi = 7.958 \times 10^{-1}$ | Ampere-turns |
| Magnetic Scalar Potential | $\Omega$ | Gilberts | $10/4\pi = 7.958 \times 10^{-1}$ | Ampere-turns |
| Permeability | $\mu$ | (Unitless) | $4\pi/10^7 = 1.257 \times 10^{-6}$ | Henries/meter |

*When $\mu_o = 1$ (CGS-EMU), 1 gamma = $10^{-5}$ gauss = $10^{-5}$ oersted = $10^{-9}$ weber/meter$^2$.

**See Note at end of Paragraph C.

## SECTION IV

## FORMULAS

The formulas in this section may be used to compute various magnetic quantities frequently encountered in low magnetic field measurements and design problems. The formulas are listed under general headings, with subheadings pertaining to special cases. The formulas are designated by heading, subheading, and number within the subheading, e.g., [illegible] refers to heading E (Flux Density), subheading [illegible] (Solenoid Coils), Formula 2.

Most literature in the area of low-field magnetics [illegible] the CGS-EMU unit system, since quantities such as [illegible] convert quite readily into CGS units and gammas respectively. The term "CGS units" refers to CGS-electromagnetic units [illegible] have been assigned such as unit pole strength and unit dipole moment. The term "EMU", which appears in some texts on magnetics, is equivalent to CGS units. For convenience, linear dimensions are given both in centimeters and in inches.

The direction of current (I) used in these formulas follows the convention of positive current flow, i.e., from positive to negative, as shown in Figure 4-1.

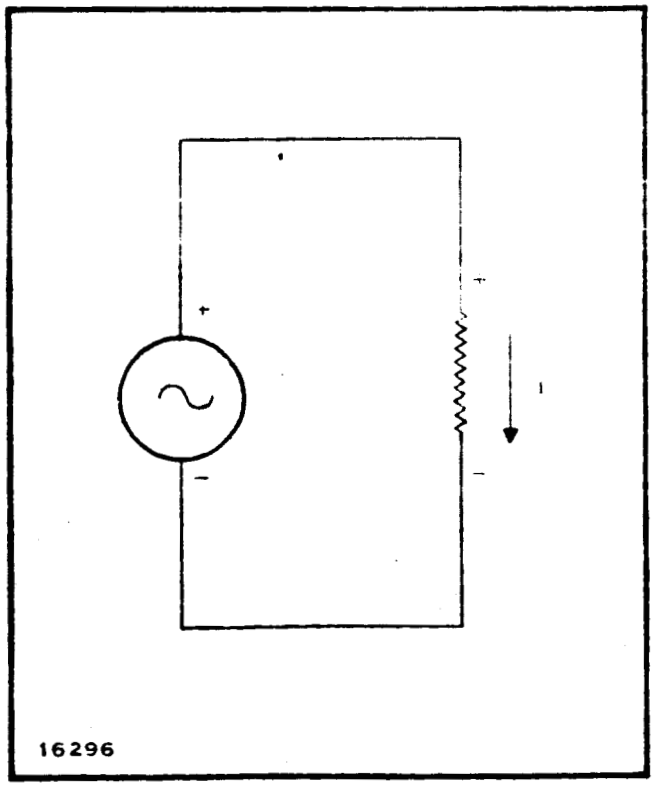


Figure 4-1. Current Convention

Unless otherwise noted, all formulas apply to a nonmagnetic medium in which the permeability $\mu = \mu_0 = 1$ (CGS-EMU). In such a medium, flux density ($\bar{B}$) and field intensity ($\bar{H}$) are equal and may be used interchangeably in all equations. Examples are worked out at the end of this section.

## A. INDEX


| Item | Page |
|---|---|
| Area, Effective | 4-3 |
| Circular Coil | 4-3 |
| Multilayer Coil | 4-4 |
| Rectangular Coil | 4-4 |
| Dipole Moment | 4-4 |
| Circular Plate (rotating about diameter) | 4-5 |
| Coil | 4-4 |
| Magnet (pole strength known) | 4-6 |
| Density, Flux (see Flux Density) | |
| Dipole Field Gradient (see Gradient, Dipole Field) | |
| Effective Area (see Area, Effective) | |
| Electromotive Force, Induced (EMF) | 4-6 |
| Coil, Fixed (in varying field) | 4-7 |
| Coil (rotating about diameter) | 4-6 |
| Flux Density | 4-7 |
| Arbitrary Conductor | 4-13 |
| Coil, Fanselau | 4-9 |
| Coil (on axis) | 4-7 |
| Solenoid (on axis) | 4-7 |
| Straight Conductor | 4-11 |
| Gradient, Dipole Field | 4-12 |
| Angular | 4-14 |
| Radial | 4-15 |
| Magnetization | 4-14 |
| Magnet of known moment | 4-16 |
| Magnet of known pole strength | 4-16 |

| Item | Page |
|---|---|
| Pole Strength | |
| Magnetized Bar (constant cross-section) | |
| Right-Hand Rule | |
| Wire | |
| Coil | |
| Rule, Right-Hand (see Right-Hand Rule) | |
| Strength, Pole (see Pole Strength) | |


E. AREA, EFFECTIVE: $A_{eff}$

1. Coil (Circular, Multilayer), Figure 4-2

a. Symbols:

$A_{eff}$ – Effective area of coil

$r_1$ – Internal radius of coil

$r_2$ – External radius of coil.

b. For $r_1$ and $r_2$ in centimeters, $A_{eff}$ is in $(cm)^2$

For $r_1$ and $r_2$ in inches, $A_{eff}$ is in $(in)^2$

$$A_{eff} = \frac{\pi}{3}(r_1^2 + r_2^2 + r_1 r_2) = 1.047\,(r_1^2 + r_2^2 + r_1 r_2) \qquad \text{(B-1-1)}$$

NOTE: For a single layer coil this reduces to simply the area of the coil.

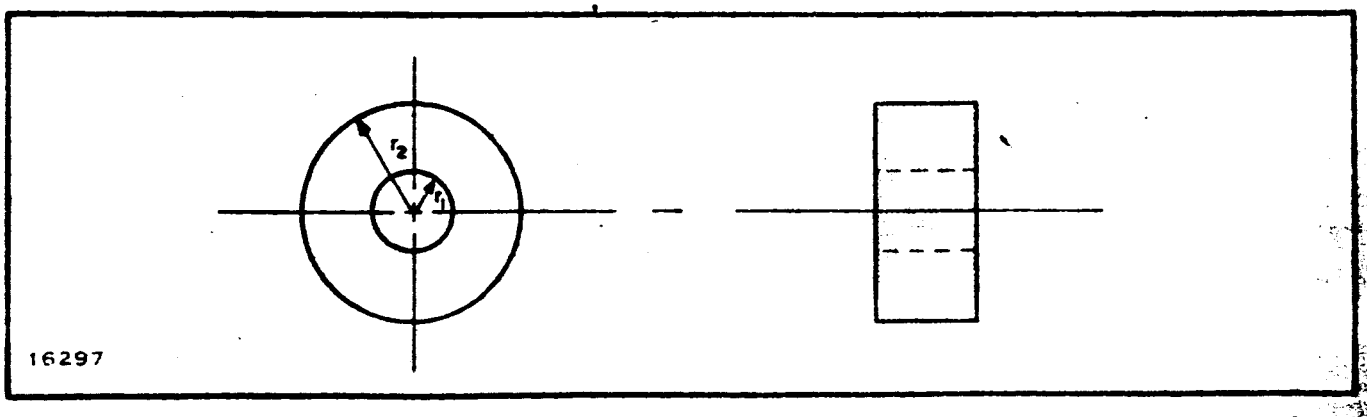


Figure 4-2. Circular Coil

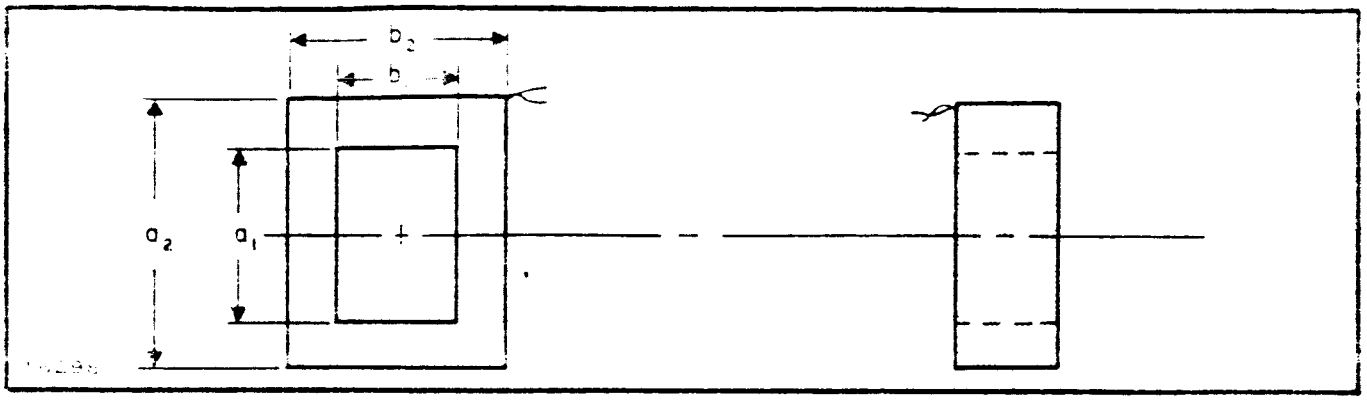


Figure 4-3. Rectangular Coil

2. Coil (Rectangular, Multilayer), Figure 4-3

a. Symbols:

$A_{eff}$–Effective area of coil

$a_1$, $a_2$, $b_1$, $b_2$–As shown in Figure 4-3.

b. For $a_1$, $a_2$, $b_1$, $b_2$ in centimeters, $A_{eff}$ is in $(cm)^2$

For $a_1$, $a_2$, $b_1$, $b_2$ in inches, $A_{eff}$ is in $(in)^2$

$$A_{eff} = \frac{1}{4} (a_1 + a_2) (b_1 + b_2). \qquad \text{(B-2-1)}$$

C. DIPOLE MOMENT

1. Coil

a. Symbols:

$A_{eff}$–Effective area of coil

I–Coil current (amperes)

$|\bar{m}|$ –Magnitude of dipole moment (CGS units)

n–Number of turns on coil.

b. For $A_{eff}$ in $(cm)^2$

$$|\bar{m}| = 0.1\, n\, I\, A_{eff} \text{ (CGS units).} \qquad \text{(C-1-1)}$$

c. For $A_{eff}$ in $(in)^2$

$$|\bar{m}| = 0.645\, n\, I\, A_{eff} \text{ (CGS units).} \qquad \text{(C-1-2)}$$

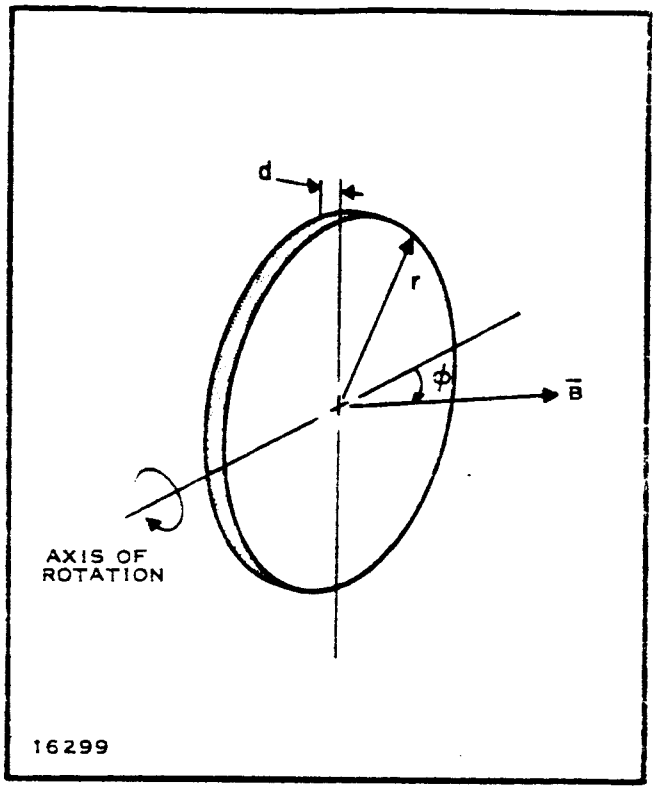


Figure 4-4. Dipole Moment of Circular Plate Rotating in a Magnetic Field

2. Plate (Circular, Rotating about Diameter), Figure 4-4

a. Symbols

A – Area of plate ($A = \pi r^2$)

$\bar{B}$ – Ambient magnetic flux density (gammas)

$\phi$ – Angle $\bar{B}$ makes with axis of rotation of plate

d – Thickness of plate

f – Frequency of rotation (revolutions/second)

t – Time (seconds); t = 0 when plate is parallel to $\bar{B}$

$\rho$ – Resistivity of plate material (ohm-cm)

$|\bar{m}|$ – Dipole moment (CGS units).

b. For A in $(cm)^2$, d in centimeters

$$|\bar{m}| = 2.508 \times 10^{-15} \frac{dA^2}{\rho} f |\bar{B}| \sin(2\pi ft) \sin\phi \text{ (CGS units)}. \quad \text{(C-2-1)}$$

c. For A in $(in)^2$, d in inches

$$|\bar{m}| = 2.63 \times 10^{-15} \frac{dA^2}{\rho} f |\bar{B}| \sin(2\pi ft) \sin\phi \text{ (CGS units)}. \quad \text{(C-2-2)}$$

NOTE:

(1) The dipole moment of a metal plate rotating in a static magnetic field is due to eddy currents induced in the plate. These equations assume that the plate is homogeneous and of uniform thickness.

(2) Equations C-2-1 and C-2-2 are equally valid for a rectangular plate of length $\ell$, width w, and thickness d rotating about an axis of symmetry. In this case, the area $A = \ell w$.

(3) The direction of the moment $\bar{m}$ is always normal to the plate.

1. Magnet (Pole Strength Method), Figure 4-5

a. Symbols

$\ell$ – Length of magnet

$m_p$ – Pole strength (CGS units or gauss-cm$^2$)

$|\bar{m}|$ – magnitude of dipole moment (CGS units)

b. For $\ell$ in centimeters

$|\bar{m}| = m_p \ell$ (CGS units).

c. For $\ell$ in inches

$|\bar{m}| = 2.54\, m_p \ell$ (CGS units). (4-5-3)

D. INDUCED ELECTROMOTIVE FORCE (EMF), Figure 4-

1. Coil (rotating about diameter)

a. Symbols

$A_{eff}$ – Effective area of coil

$\bar{B}$ – Ambient field (gammas)

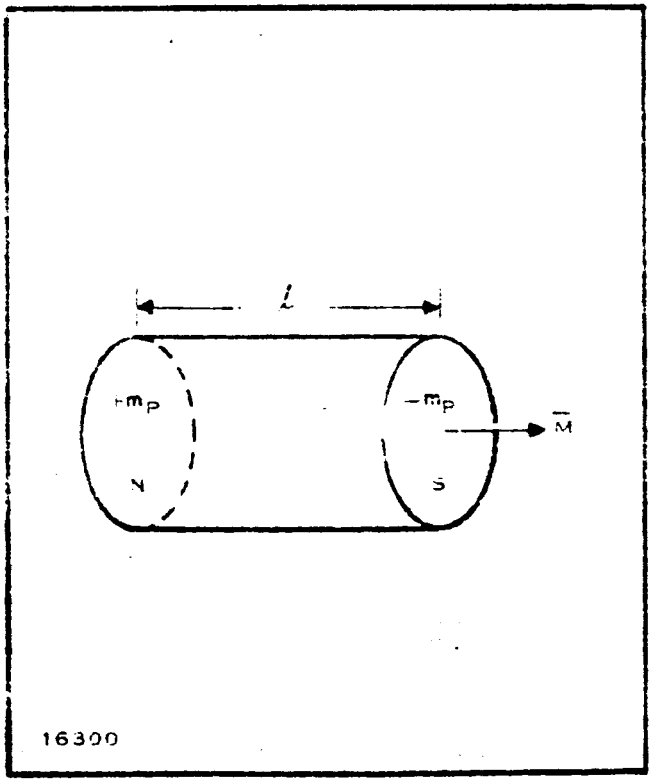


Figure 4-5. Dipole Moment of a Cylindrical Magnet

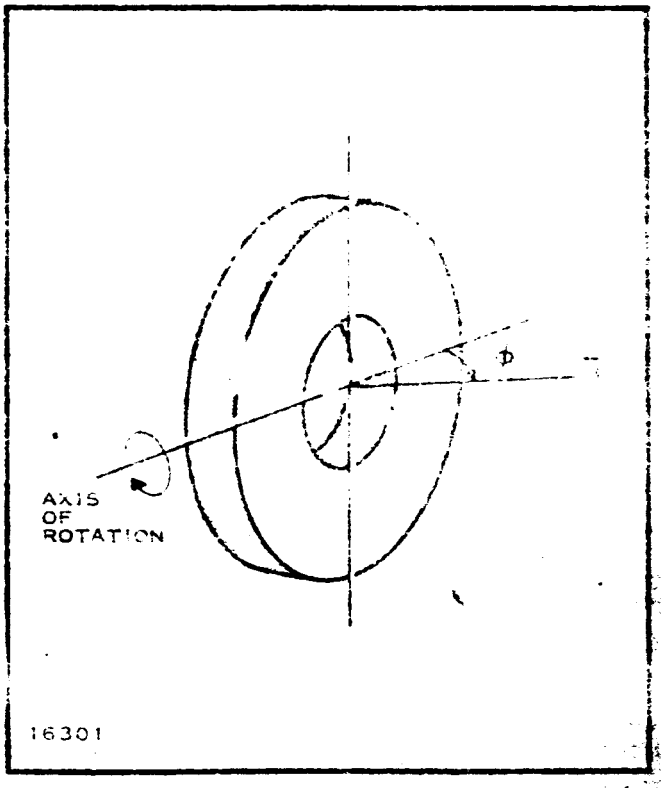


Figure 4-6. Rotating Coil

e–Induced emf in coil (volts)

f–Frequency of rotation (revolutions per second)

n–Number of turns on coil

t–Time (seconds); t = 0 when plane of coil is parallel to $\bar{B}$

$\phi$–Angle $\bar{B}$ makes with axis of rotation of coil.

b. For $A_{eff}$ in $(cm)^2$

$$e = 6.28 \times 10^{-9}\, n\, |\bar{B}|\, f\, A_{eff} \sin(2\pi f t + \phi) \text{ (volts)} \qquad \text{(D-1-1)}$$

c. For $A_{eff}$ in $(in)^2$

$$e = 4.05 \times 10^{-8}\, n\, |\bar{B}|\, f\, A_{eff} \sin(2\pi f t + \phi) \text{ (volts)} \qquad \text{(D-1-2)}$$

2. Coil (Fixed, in Varying Field), Figure 4-7

a. Symbols

$A_{eff}$–Effective area of coil

$\frac{\partial \bar{B}}{\partial t}$–Rate of change of ambient flux density (gammas/second)

e–Induced emf in coil (volts)

n–Number of turns on coil

$\phi$–angle $\bar{B}$ makes with plane of coil

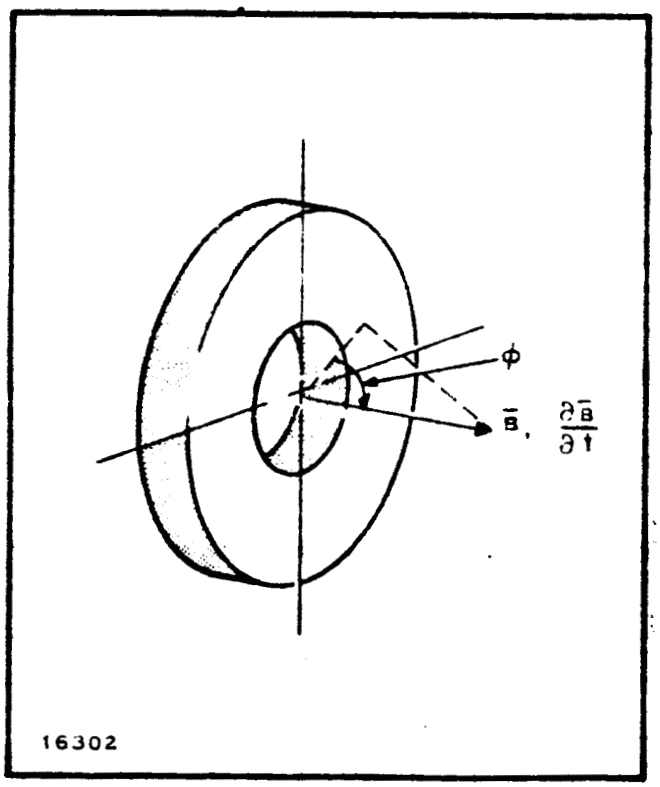


Figure 4-7 Fixed Coil in Varying Field

b. For $A_{eff}$ in $(cm)^2$

$$e = 10^{-13}\, n\, A_{eff} \sin\phi \frac{\partial |\bar{B}|}{\partial t} \text{ (volts)} \qquad \text{(D-2-1)}$$

c. For $A_{eff}$ in $(in)^2$

$$e = 6.45 \times 10^{-13}\, n\, A_{eff} \sin\phi \frac{\partial |\bar{B}|}{\partial t} \text{ (volts)} \qquad \text{(D-2-2)}$$

## E. FLUX DENSITY: $\bar{B}$

1. Coil (on axis), Figure 4-8

a. Symbols

$A_{eff}$–Effective area of coil

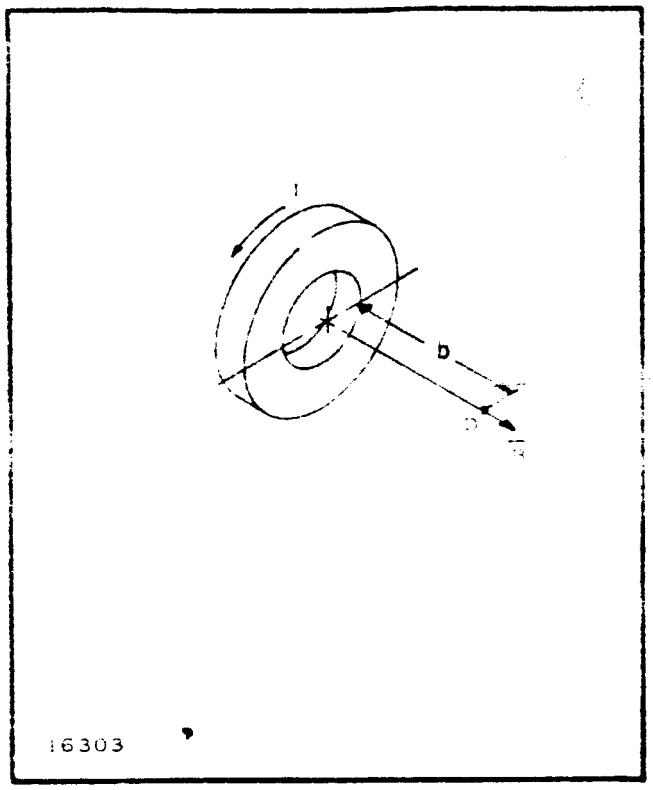


Figure 4-8. Single Coil

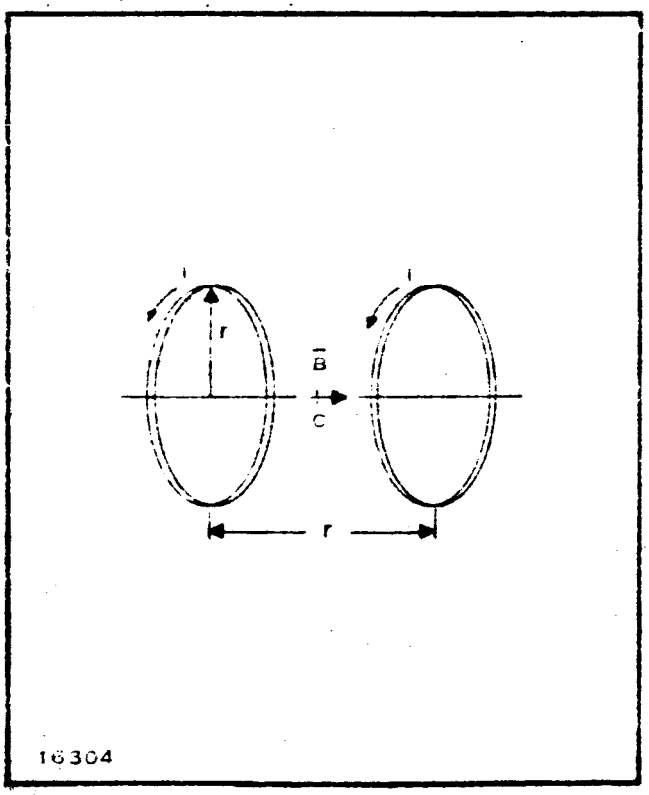


Figure 4-9. Helmholtz Coils

$r^2$ – Effective squared radius [illegible]

$\bar{B}$ – Flux density at point D (gamma)

b – Distance from coil along axis

I – Coil current (amperes)

b. For A, [illegible] (cm)², [illegible]

$$|\bar{B}| = 2 \times 10^{[illegible]} \frac{[illegible]}{(r^2 + b^2)^{[illegible]}} \text{ (gammas)}. \quad \text{(E-1-1)}$$

c. For A, [illegible] (inches)

$$|\bar{B}| = 7.88 \times 10^{[illegible]} \frac{n I A_{eff}}{(r^2 + b^2)^{3/2}} \text{ (gammas)}. \quad \text{(E-1-2)}$$

2. Coil, Helmholtz (at center), Figure 4-9

a. Symbols

r – Radius of single coil

$\bar{B}$ – Flux density at point C (gammas)

I – Coil current (amperes)

n – Number of turns on one coil (identical coils).

b. For r in centimeters

$$|\bar{B}| = 8.98 \times 10^{4} \frac{nI}{r} \text{ (gammas)}. \quad \text{(E-2-1)}$$

c. For r in inches

$$|\bar{B}| = 3.54 \times 10^{4} \frac{nI}{r} \text{ (gammas)}. \quad \text{(E-2-2)}$$

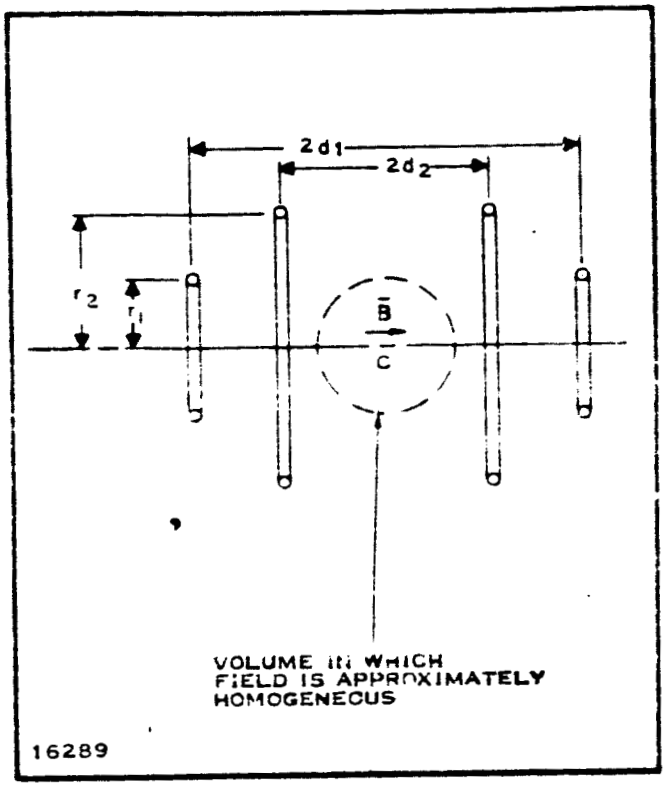


Figure 4-10. Fanselau Coil, Side View

3. Coil, Fanselau (Figure 4-10)

a. Symbols

$r_1$ – Radius of an outer coil

$r_2$ – Radius of an inner coil

$2d_1$ – Separation of the outer coil pair

$2d_2$ – Separation of the inner coil pair

I – Coil current (amperes)

n – Number of turns in one coil

$\bar{B}$ – Flux density at the center of the coil system (gammas).

b. Assumptions

(1) All coils have the same number of turns.

(2) All coils are connected series-aiding.

(3) Formulas are for free space where $\mu = \mu_0 = 1$ (CGS-EMU). Therefore, $\bar{B} = \bar{H}$.

c. Relative dimensions for r1, r2, d1, and d2 (all in centimeters or all in inches)

$$\frac{d_1}{r_1} = 1.10723, \quad \frac{r_2}{r_1} = 1.30915, \quad \frac{d_2}{r_1} = 0.36401, \quad \frac{d_2}{r_2} = 0.27805. \qquad \text{(E-3-1)}$$

d. Flux density at point C for dimensions in centimeters

$$|\bar{B}| = \frac{10^5\, n\, I}{0.80852\, r_1} = 1.23683 \times 10^5 \frac{n\, I}{r_1} \text{ (gammas).} \qquad \text{(E-3-2)}$$

e. Flux density at point C for dimensions in inches

$$|\bar{B}| = \frac{10^5\, n\, I}{2.05364\, r_1} = 4.86940 \times 10^4 \frac{n\, I}{r_1} \text{ (gammas).} \qquad \text{(E-3-3)}$$

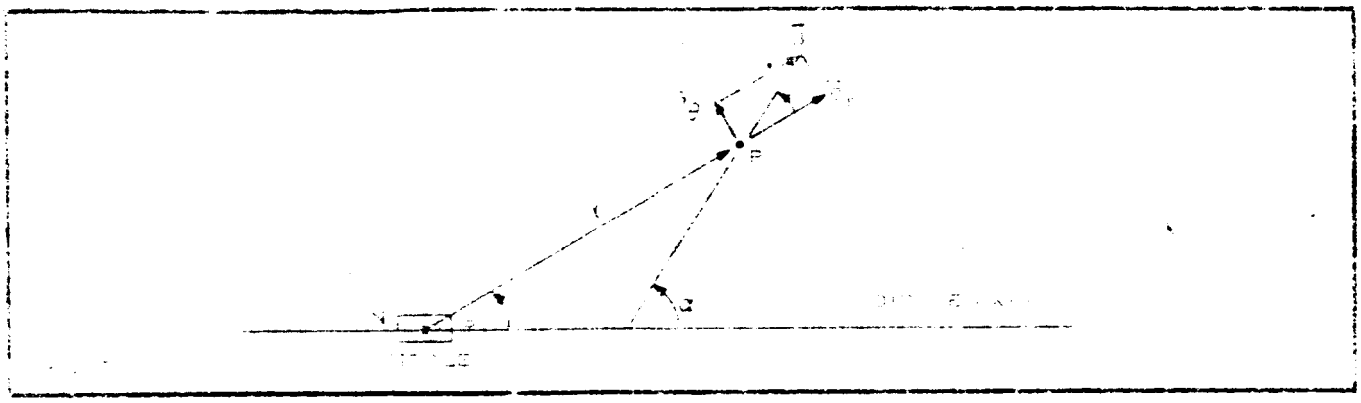

[illegible]

a. [illegible] Figure 4-[illegible]

b. [illegible]

$\bar{B}_\theta$ – Component of $\bar{B}$ [illegible] (increasing $\theta$)

$\bar{B}_r$ – Component of $\bar{B}$ in direction of r (gammas)

$\bar{B}$ – Total flux density at P due to $\bar{m}$ (gammas)

$\bar{m}$ – Dipole moment of dipole (CGS units)

r – Distance from dipole to measurement point P

$\alpha$ – Angle between $\bar{B}$ and dipole axis

$\theta$ – Angle between r and dipole axis

$\phi$ – Angle between $\bar{B}$ and r.

c. [illegible]

$$|\bar{B}_\theta| = \frac{|\bar{m}|}{r^3} \text{ [illegible] (gammas)} \qquad \text{[illegible]}$$

$$|\bar{B}_r| = \frac{2|\bar{m}|}{r^3} \cos \text{[illegible]} \times 10^3 \text{ (gammas)} \qquad \text{[illegible]}$$

$$|\bar{B}| = \frac{|\bar{m}|}{r^3} \sqrt{1 + 3\cos^2\theta} \times 10^3 \text{ (gammas).} \qquad \text{(E-4-3)}$$

c. For r in inches

$$|\bar{B}_\theta| = 6.11 \times 10^3 \frac{|\bar{m}|}{r^3} \text{ [illegible] (gammas)} \qquad \text{[illegible]}$$

$$|\bar{B}_r| = 6.11 \times 10^3 \frac{|\bar{m}|}{r^3} \cos\theta \text{ (gammas)} \qquad \text{(E-4-5)}$$

$$|\bar{B}| = 6.11 \times 10^{5} \frac{\bar{m}}{r^{3}} \sqrt{1 + 3\cos^{2}\theta} \text{ (gammas)}. \qquad (E\text{-}4\text{-}6)$$

NOTE: These equations are approximations to infinite series. They are reasonably valid for r greater than three times the largest dimension of the dipole.

d. Angle Relationships

$$\tan\theta = 2\frac{|\bar{B}_{\theta}|}{|\bar{B}_{r}|} = 2\tan\phi \qquad (E\text{-}4\text{-}7)$$

$$\tan\phi = \frac{|\bar{B}_{\theta}|}{|\bar{B}_{r}|} \qquad (E\text{-}4\text{-}8)$$

$$\phi = \tan^{-1}\left(\frac{1}{2}\tan\theta\right) \qquad (E\text{-}4\text{-}9)$$

$$\theta = \tan^{-1}(2\tan\phi) \qquad (E\text{-}4\text{-}10)$$

$$\alpha = \theta + \phi \qquad (E\text{-}4\text{-}11)$$

$$|\bar{B}_{\theta}| = |\bar{B}| \sin\alpha \qquad (E\text{-}4\text{-}12)$$

$$|\bar{B}_{r}| = |\bar{B}| \cos\alpha. \qquad (E\text{-}4\text{-}13)$$

5. Solenoid (on axis), Figure 4-12

a. Symbols

$|\bar{B}|$ –Magnitude of flux density at point P (gammas)

I–Solenoid current (amperes)

$\ell$ –Solenoid length

n–Number of turns on solenoid

$\alpha$, $\beta$–Angles shown on Figure 4-12.

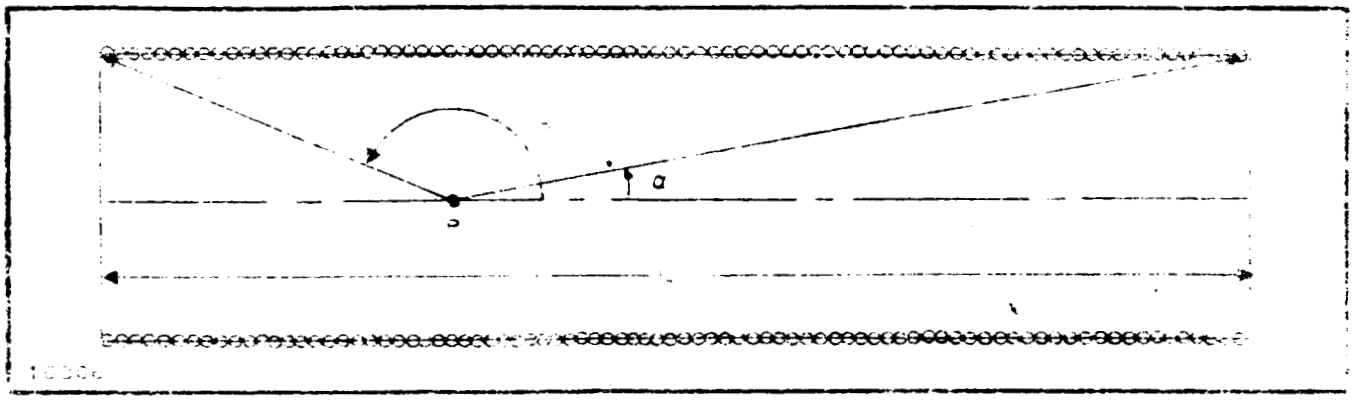


Figure 4-12. Solenoid Field

b. For $\ell$ in centimeters

$$\bar{B} = 6.2 \times 10^{4} \frac{nI}{\ell} (\cos\beta - \cos\delta) \text{ (gammas)}. \qquad (E\text{-}5\text{-}1)$$

c. For $\ell$ in inches

$$\bar{B} = 2.47 \times 10^{4} \frac{nI}{\ell} (\cos\beta - \cos\delta) \text{ (gammas)}. \qquad (E\text{-}5\text{-}2)$$

NOTE: These equations hold for any point on the axis of the solenoid. The direction of $\bar{B}$ is determined by the right-hand rule (see Section I, page 4-17).

c. Straight Conductor, Figure 4-13

a. Symbols

$|\bar{B}|$ – Magnitude of flux density at point [illegible]

$I$ – Conductor current (amperes)

$\ell$ – Length of conductor

$r$ – Perpendicular distance from conductor to point P

$\alpha$, $\beta$ – Angles as shown on drawing.

b. For r in centimeters

$$|\bar{B}| = 10^{4} \frac{I}{r} (\cos\beta + \cos\alpha) \text{ (gammas)}. \qquad (E\text{-}6\text{-}1)$$

c. For r in inches

$$|\bar{B}| = 3.94 \times 10^{3} \frac{I}{r} (\cos\beta + \cos\alpha) \text{ (gammas)}. \qquad (E\text{-}6\text{-}2)$$

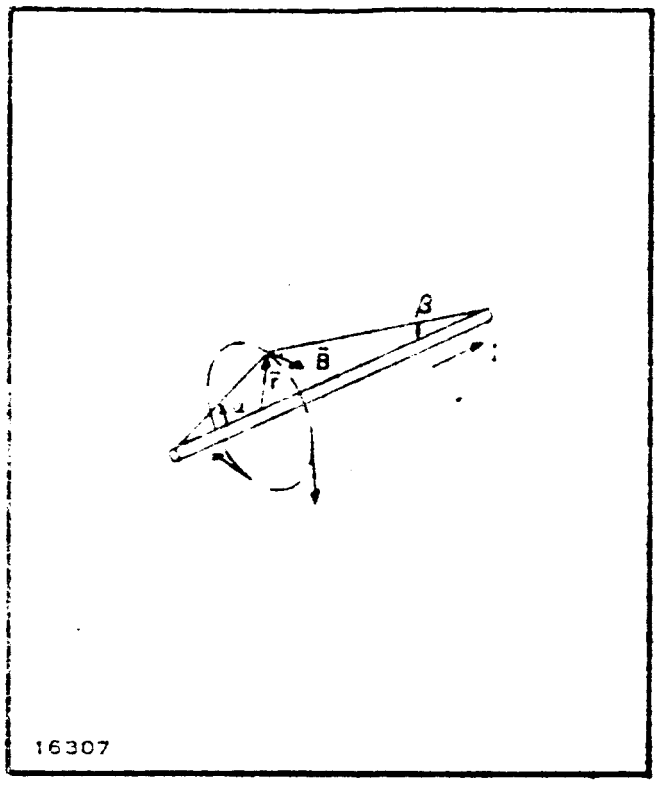


Figure 4-13. Field of a Straight Conductor

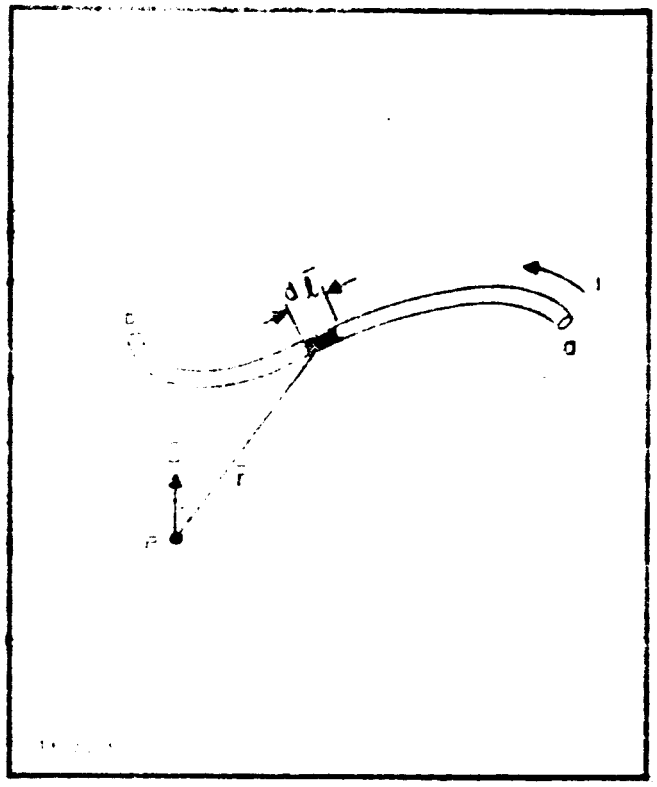

Figure 4-14. Field of an Arbitrary Conductor

d. For a wire sufficiently long such that $\alpha = \beta \approx 0°$, $\cos\alpha = \cos\beta \approx 1$. Equations E-6-1 and E-6-2 then reduce to Equations E-6-3 and E-6-4 respectively:

$$|\bar{B}| = 2 \times 10^4 \frac{I}{r} \text{ (gammas)} \qquad \text{(E-6-3)}$$

$$|\bar{B}| = 7.88 \times 10^3 \frac{I}{r} \text{ (gammas)} \qquad \text{(E-6-4)}$$

NOTE: Direction of $\bar{B}$ is determined by the right-hand rule.

7. Arbitrary Conductor (Biot-Savart Law), Figure 4-14

a. Symbols

a, b – End points of conductor

$\bar{B}$ – Flux density at point P (gammas)

I – Current in conductor (amperes) (I is assumed positive when flowing in direction of $d\bar{\ell}$)

$d\bar{\ell}$ – Differential element of conductor

$\bar{r}$ – Vector from point P to element

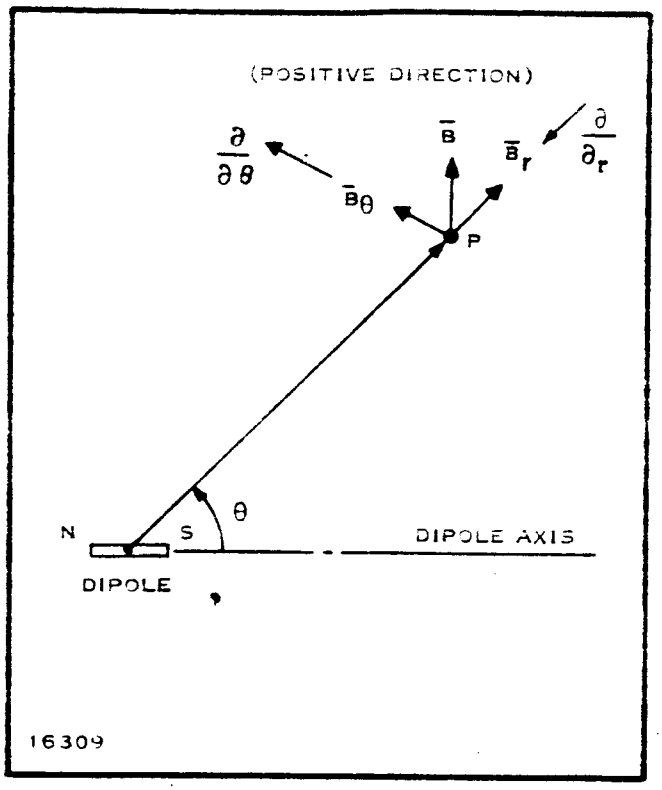


Figure 4-15. Dipole Field Gradient

b. For $\bar{r}$, $d\bar{\ell}$ in centimeters

$$\bar{B} = 10^4 I \int_a^b \frac{d\bar{\ell} \times \bar{r}}{|\bar{r}|^3} \text{ (gammas).} \qquad \text{(E-7-1)}$$

c. For $\bar{r}$, $d\bar{\ell}$ in inches

$$\bar{B} = 2.54 \times 10^4 I \int_a^b \frac{d\bar{\ell} \times \bar{r}}{|\bar{r}|^3} \text{ (gammas).} \qquad \text{(E-7-2)}$$

## F. GRADIENT, DIPOLE FIELD

1. Radial

$$\frac{\partial|\bar{B}_\theta|}{\partial r}, \quad \frac{\partial|\bar{B}_r|}{\partial r}, \quad \frac{\partial|\bar{B}|}{\partial r}$$

a. Symbols

$\bar{B}_\theta$ – Angular component of B (perpendicular to r) (gammas)

$\bar{B}_r$ – Radial component of B (along r) (gammas)

$\bar{B}$ – Total flux density at point P due to $\bar{m}$ (gammas)

$\bar{m}$ – Dipole moment (CGS-units)

r – Distance from dipole to point P.

b. For r in centimeters

$$\frac{\partial|\bar{B}_\theta|}{\partial r} = -\frac{3|\bar{m}|}{r^4} \sin\theta \times 10^5 = -\frac{3|\bar{B}_\theta|}{r} \quad \frac{\text{gammas}}{\text{cm}} \qquad \text{(F-1-1)}$$

$$\frac{\partial|\bar{B}_r|}{\partial r} = -\frac{6|\bar{m}|}{r^4} \cos\theta \times 10^5 = -\frac{3|\bar{B}_r|}{r} \quad \frac{\text{gammas}}{\text{cm}} \qquad \text{(F-1-2)}$$

$$\frac{\partial|\bar{B}|}{\partial r} = -\frac{3|\bar{m}|}{r^4} (1 + 3\cos^2\theta) \times 10^5 = -\frac{3|\bar{B}|}{r} \quad \frac{\text{gammas}}{\text{cm}}. \qquad \text{(F-1-3)}$$

b. For r in inches

$$\frac{\partial|\bar{B}_\theta|}{\partial r} = -1.833 \times 10^4 \frac{|\bar{m}|}{r^4} \sin\theta = -\frac{3|\bar{B}_\theta|}{r} \quad \frac{\text{gammas}}{\text{in.}} \tag{F-1-4}$$

$$\frac{\partial|\bar{B}_r|}{\partial r} = -3.666 \times 10^4 \frac{|\bar{m}|}{r^4} \cos\theta = -\frac{3|\bar{B}_r|}{r} \quad \frac{\text{gammas}}{\text{in.}} \tag{F-1-5}$$

$$\frac{\partial|\bar{B}|}{\partial r} = -1.833 \times 10^4 \frac{|\bar{m}|}{r^4} (1 + 3\cos^2\theta) = -\frac{3|\bar{B}|}{r} \quad \frac{\text{gammas}}{\text{in.}} \tag{F-1-6}$$

(See Note Following Formula E-4-6.)

2. Angular

$$\frac{\partial|\bar{B}_\theta|}{\partial\theta}, \frac{\partial|\bar{B}_r|}{\partial\theta}, \frac{\partial|\bar{B}|}{\partial\theta}.$$

a. Symbols as in 1a.

b. For r in centimeters

$$\frac{\partial|\bar{B}_\theta|}{\partial\theta} = +\frac{|\bar{m}|}{r^3} \cos\theta \times 10^5 \quad \frac{\text{gammas}}{\text{degree}} \tag{F-2-1}$$

$$\frac{\partial|\bar{B}_r|}{\partial\theta} = -\frac{2|\bar{m}|}{r^3} \sin\theta \times 10^5 \quad \frac{\text{gammas}}{\text{degree}} \tag{F-2-2}$$

$$\frac{\partial|\bar{B}|}{\partial\theta} = -\frac{6|\bar{m}|}{r^3} \sin\theta\cos\theta \times 10^5 \quad \frac{\text{gammas}}{\text{degree}} \tag{F-2-3}$$

$$\frac{\partial|\bar{B}_\theta|}{\partial\theta} = +6.11 \times 10^3 \frac{|\bar{m}|}{r^3} \cos\theta \quad \frac{\text{gammas}}{\text{degree}} \tag{F-2-4}$$

$$\frac{\partial|\bar{B}_r|}{\partial\theta} = -1.222 \times 10^4 \frac{|\bar{m}|}{r^3} \sin\theta \quad \frac{\text{gammas}}{\text{degree}} \tag{F-2-5}$$

$$\frac{\partial|\bar{B}|}{\partial\theta} = -3.666 \times 10^4 \frac{|\bar{m}|}{r^3} \sin\theta\cos\theta \quad \frac{\text{gammas}}{\text{degree}} \tag{F-2-6}$$

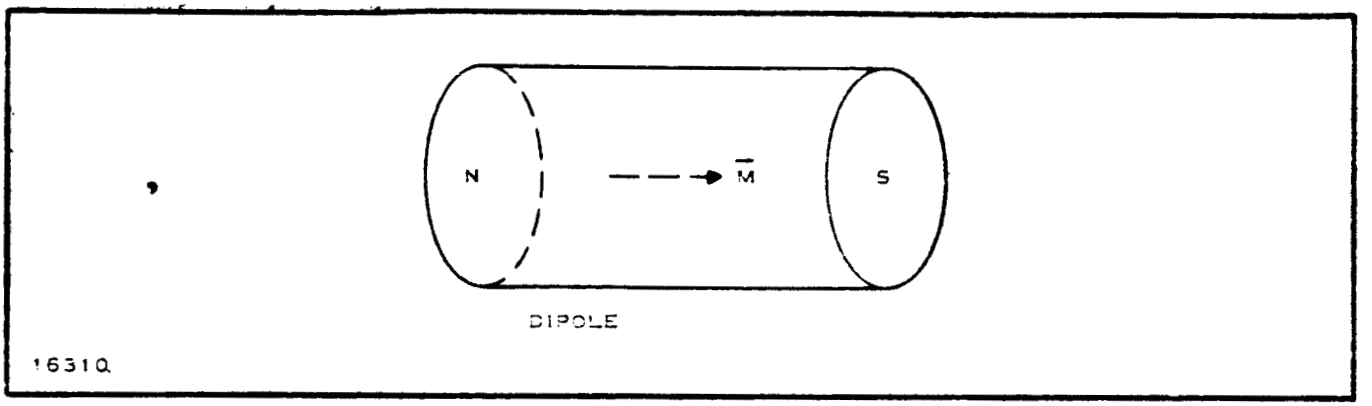


Figure 4-16. Magnetization of a Cylindrical Magnet

## G. MAGNETIZATION: $\bar{M}$

### 1. Magnet of Known Moment ($\bar{m}$), Figure 4-16

a. Symbols

A – Area of end of magnet

$\ell$ – Length of magnet

$\bar{m}$ – Magnitude of dipole moment magnet (CGS units)

$\bar{M}$ – Magnetization (oersted).

b. For A in $(cm)^2$, $\ell$ in centimeters

$$|\bar{M}| = \frac{\bar{m}}{\ell A} \text{ (oersted).} \qquad \text{(G-1-1)}$$

c. For A in $(in.)^2$, $\ell$ in inches

$$|\bar{M}| = 6.11 \times 10^{-2} \frac{|\bar{m}|}{\ell A} \text{ (oersted).} \qquad \text{(G-1-2)}$$

### 2. Magnet of Known Pole Strength, $m_p$

a. Symbols

$m_p$ – Pole strength (CGS units)

Others as in G1.

b. For A in $(cm)^2$

$$|\bar{M}| = \frac{m_p}{A} \text{ (oersted).} \qquad \text{(G-2-1)}$$

c. For A in $(in.)^2$

$$|\bar{M}| = 1.55 \times 10^{-1} \frac{m_p}{A} \text{ (oersted).} \qquad \text{(G-2-2)}$$

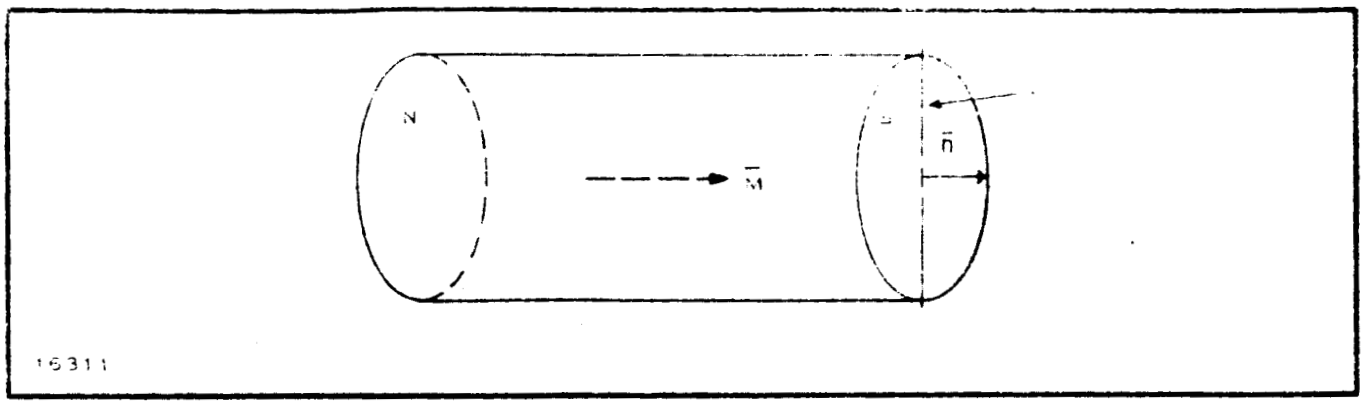


Figure 4-17. Pole Strength of a Cylindrical Magnet

H. POLE STRENGTH: $m_p$, Figure 4-17

1. Magnetized Bar (constant cross-section)

a. Symbols

A – Area of end

dA – Differential element of area A

$\bar{M}$ – Magnetization of bar (oersteds)

$m_p$ – Pole strength (CGS units)

$\bar{n}$ – Unit vector perpendicular to area element

$\theta$ – Angle between $\bar{M}$ and $\bar{n}$.

b. For A in $(cm)^2$

$$m_p = -\int_A \bar{M} \cdot \bar{n}\, dA = \text{(for flat ends)} - \bar{M} A \cos\theta$$

(CGS units). (II-1-1)

c. For A in $(in.)^2$

$$m_p = -6.45 \int_A \bar{M} \cdot \bar{n}\, dA = \text{(for flat ends)} -6.45\, \bar{M} A \cos\theta$$

(CGS units). (II-1-2)

I. RIGHT-HAND RULE

The right hand rule may be used to determine the direction of the magnetic field of a wire or coil in the following manner.

1. Wire (Figure 4-18)

Grasp the wire in the right hand so that the thumb points in the direction of positive (positive electrode to negative electrode) current flow. The fingers will then point in the direction of $\bar{B}$ (or $\bar{H}$).

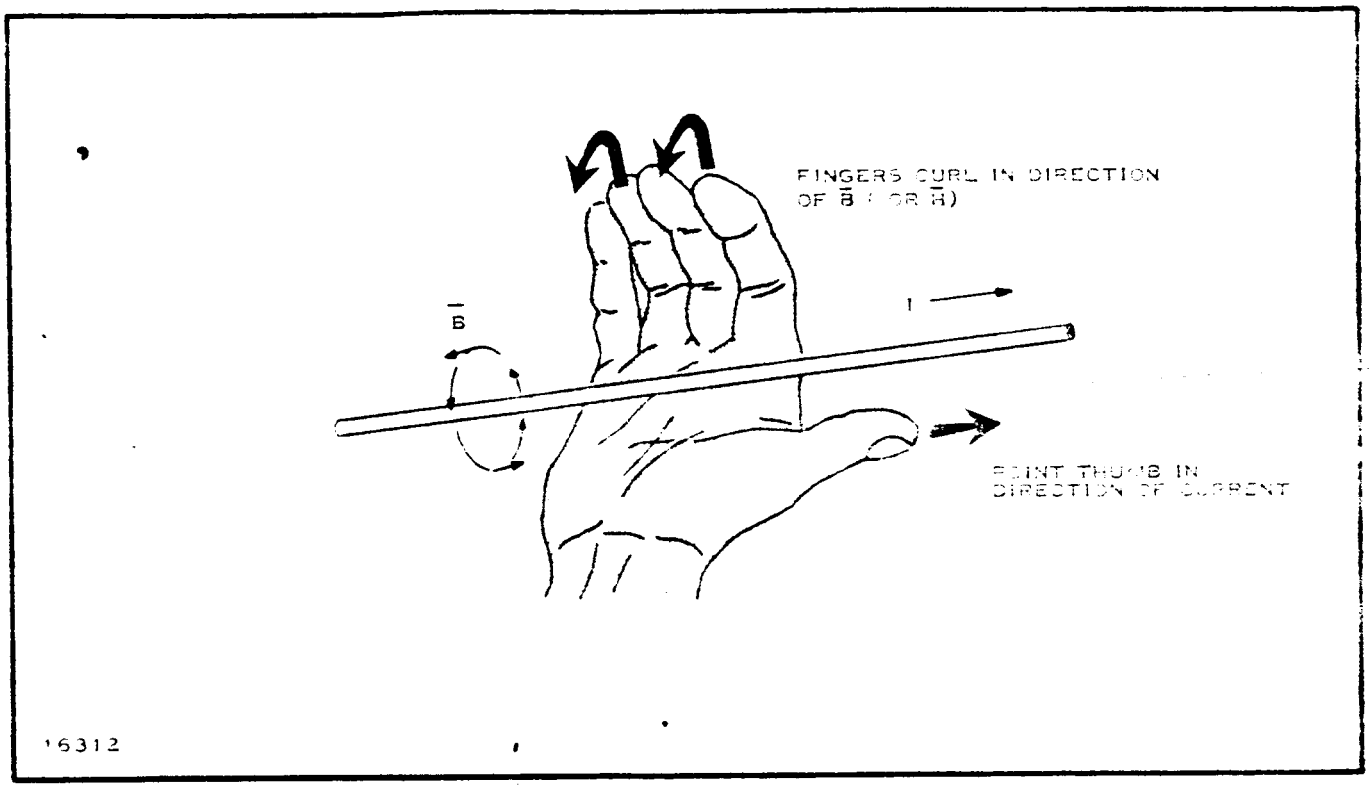


Figure 4-18. Right-Hand Rule for a Current Carrying Wire

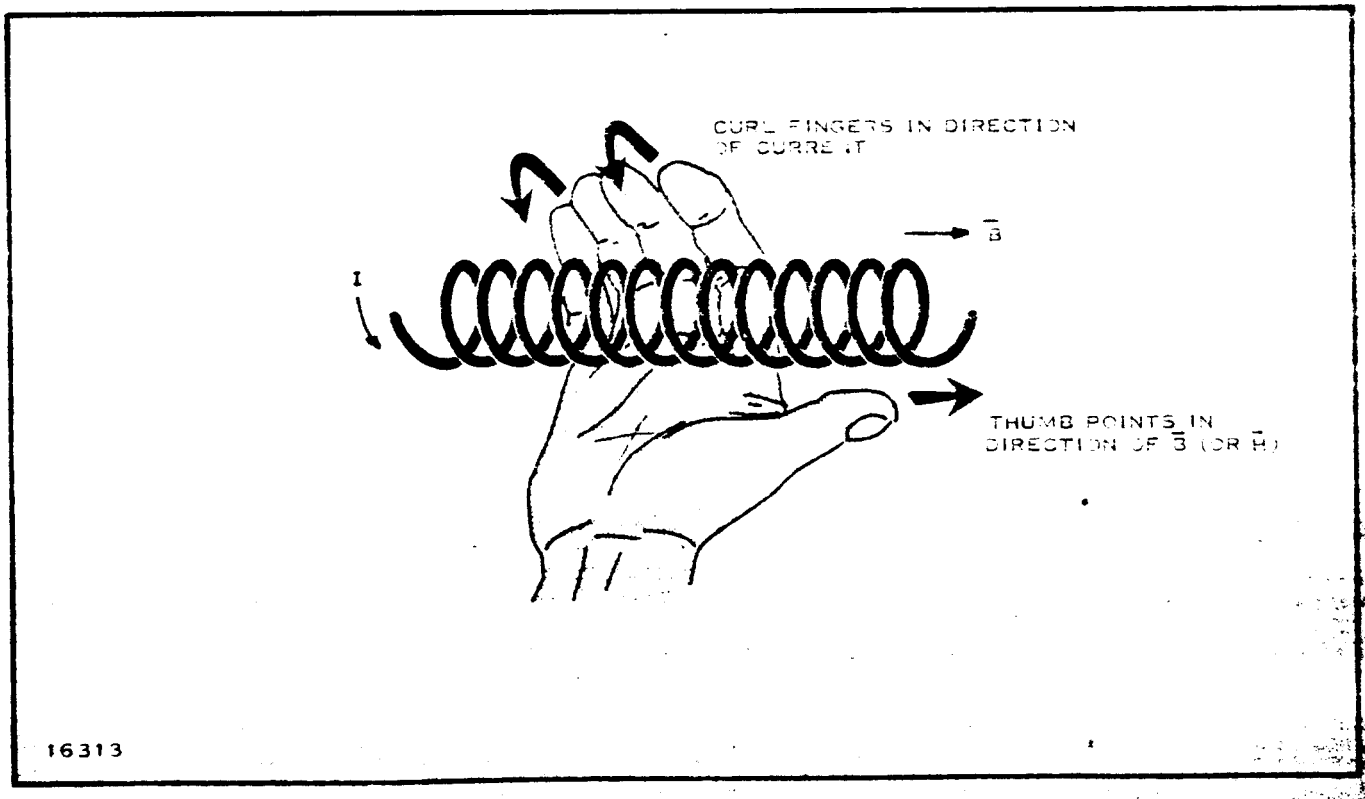


Figure 4-19. Right-Hand Rule for a Coil

2. Coil (Figure 4-19)

Grasp the coil so that the fingers point in the direction of positive current flow. The thumb will indicate the direction of $\bar{B}$ (or $\bar{H}$).

## J. EXAMPLE NO. 1

Formulas involved:

a. Effective area of coil

b. Dipole moment of coil

c. Flux density due to dipole

d. Helmholtz coil flux density

e. Right-hand rule.

A coil with specifications given below is energized by a direct current of 1 ampere. It is necessary to buck out (apply an opposing field) the field of this coil at a point P which is 100 cm from the center of the coil and 70 degrees off the coil axis. This is to be done with a Helmholtz coil array with specifications below. It is necessary to compute the orientation and coil current for the Helmholtz coils so that their flux density $\bar{B}_h$ will be the same magnitude as the flux density $\bar{B}_c$ due to the coil, but in the opposite direction; i.e., $\bar{B}_h = -\bar{B}_c$ (Figure 4-20).

1. Coil Specifications

$r_1$ = Internal radius = 1 centimeter

$r_2$ = External radius = 5 centimeters

$I_c$ = Coil current = 1 ampere

n = Number of turns on coil = 1000 turns

$\bar{B}_c$ = Flux density due to coil.

2. Helmholtz Coil Specifications

$r_h$ = Radius of Helmholtz coil = 3 centimeters

$n_h$ = Number of turns per coil = 100 turns

$\bar{B}_h$ = Flux density due to Helmholtz coil (gammas)

$I_h$ = Helmholtz coil current (amperes).

First, the dipole moment $\bar{m}$ of the coil must be computed from the coil's effective area, $A_{eff}$, and the coil current $I_c$. From the coil dipole moment, the magnitude and direction of the flux density $\bar{B}_c$ at P may be calculated. This will determine the orientation and current for the Helmholtz coils.

a. Compute $A_{eff}$

$$A_{eff} = \frac{\pi}{3} \left(r_1^2 + r_2^2 + r_1 r_2\right). \qquad \text{(B-1-1)}$$

Substituting for

$$A_{eff} = \frac{\pi}{3} \left(1^2 + 5^2 + 5\right) = \frac{\pi}{3} (31) - 32.5 \ (\text{cm})^2.$$

b. Compute $|\bar{m}|$

$$|\bar{m}| = 0.1 \ n \ I_c \ A_{eff} \ \text{(CGS units)}. \qquad \text{(C-1-1)}$$

Substituting for n, $I_c$, $A_{eff}$

$$|\bar{m}| = 0.1 \ (1000) \ (1) \ (32.5) = 3250 \ \text{(CGS units)}.$$

c. Compute $|\bar{B}|$ at P

$$|\bar{B}| = \frac{|\bar{m}|}{r_h^3} \cdot \sqrt{1 + 3 \cos^2 \theta} \times 10^5 \ \text{(gammas)}. \qquad \text{(E-4-3)}$$

Substituting for $|\bar{m}|$, $r_h$, and $\theta$ (= 70°)

$$|\bar{B}| = 10^5 \frac{3250}{100^3} \sqrt{1 + 3 \cos^2 70°} = \frac{3250}{10^6} \sqrt{1.348} \times 10^5$$

$$|\bar{B}| = 377 \ \text{(gammas)}.$$

d. Compute $\phi$ and $\alpha$

$$\phi = \tan^{-1} \left(\frac{1}{2} \tan \theta\right). \qquad \text{(E-4-9)}$$

Substituting $\theta = 70°$

$$\phi = \tan^{-1} \left(\frac{1}{2} \tan 70°\right) = \tan^{-1} \left(\frac{2.75}{2}\right) = \tan^{-1} (1.38)$$

$$= 54.1 \text{ degrees}$$

$$\alpha = \theta + \phi. \qquad \text{(E-4-11)}$$

Substituting $\theta = 70$ degrees and $\delta = 54.1$ degrees

$$\alpha = 70° + 54.1° = 124.1°.$$

Or, considering only the acute angle, $180° - \alpha$, between the coil axis and the Helmholtz coil axis:

$$180° - \alpha = 180° - 124.1° = 55.9°.$$

e. Compute Helmholtz coil current, $I_h$

$$|\bar{B}_h| = |\bar{B}_c| = 8.98 \times 10^4 \frac{n_h I_h}{r_h}.$$

Solving for $I_h$

$$I_h = \frac{r_h |\bar{B}_h|}{n_h (8.98 \times 10^4)} \quad \text{(amperes)}.$$

Substituting for $r_h$, $n_h$, and $|\bar{B}_h|$

$$I_h = \frac{3(377)}{100\,(8.98 \times 10^4)}$$

$$I_h = \frac{1131}{8.98} \times 10^{-6}$$

$$I_h = 1.26 \times 10^{-4} \quad \text{(amperes)}.$$

3. Summary

The Helmholtz coils must be oriented with their axis at an angle of 55.9 degrees to the coil axis. The center of the Helmholtz coil array must coincide with point P. The necessary exciting current for the Hemholtz coils is $1.26 \times 10^{-4}$ amperes. The direction of this current is determined by the right-hand rule (Figure 4-20).

## K. EXAMPLE NO. 2

**Formula involved: $B_\theta$ component of dipole field.**

It is desired to determine the magnetic dipole moment of an axially magnetized cylindrical bar. This is to be done in a magnetically unshielded area using a magnetometer with a strip chart recorder readout. The

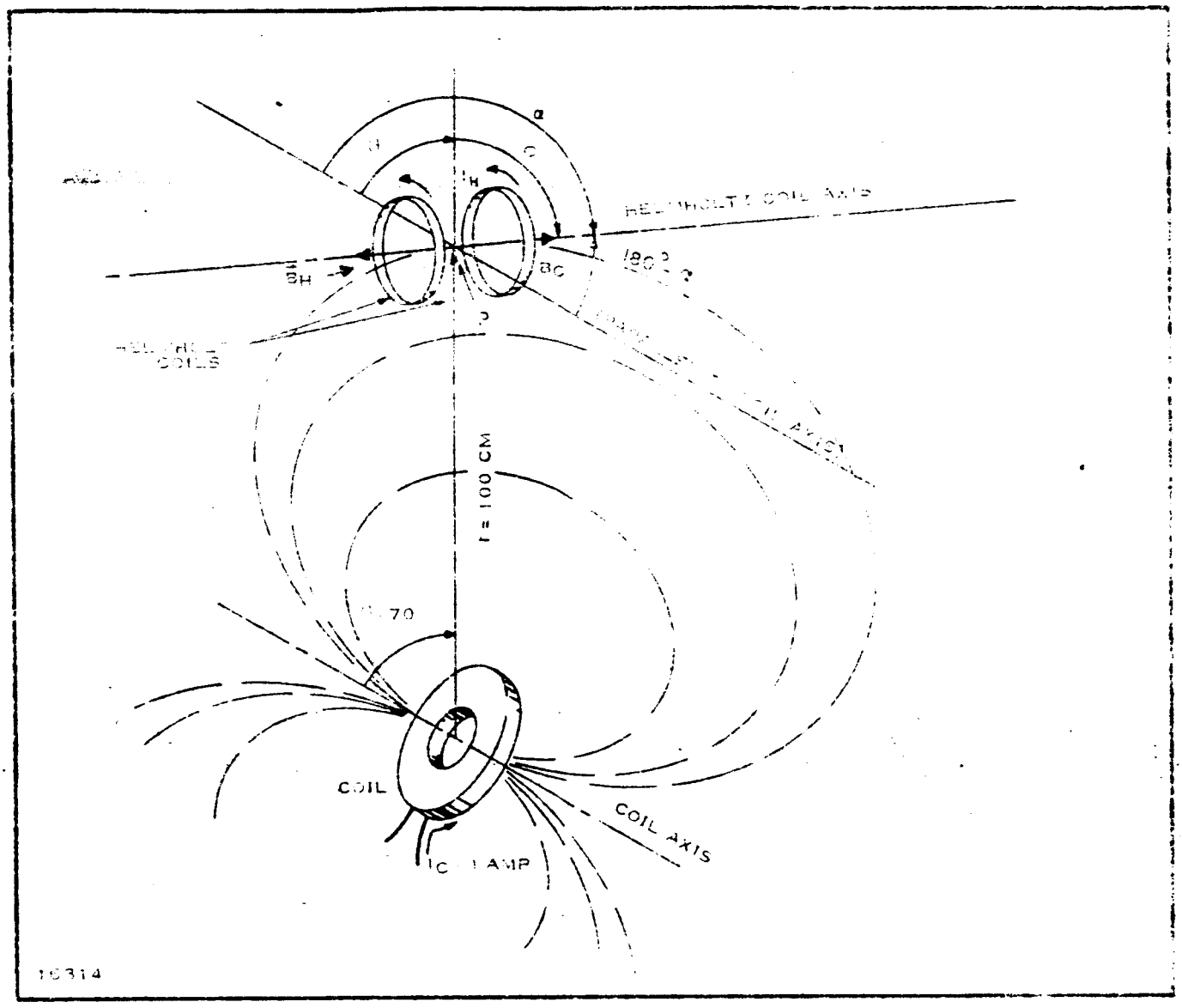


Figure 4-20. Helmholtz C[illegible] Compensation System
(Example [illegible])

magnetometer must first be calibrated. A 1000 CGS unit standard magnet is available for this purpose.*

1. Calibration

It is convenient to calibrate the magnetometer with a 1 gamma peak-to-peak magnetic field intensity using the standard magnet in the unfavorable orientation. The sensitive axis of the magnetometer is first aligned with the earth's magnetic field. The calibration magnet is rotated at a distance r

*1000 CGS unit calibration magnets may be obtained from the Indiana General Corporation, Magnet Division, Valparaiso, Indiana.

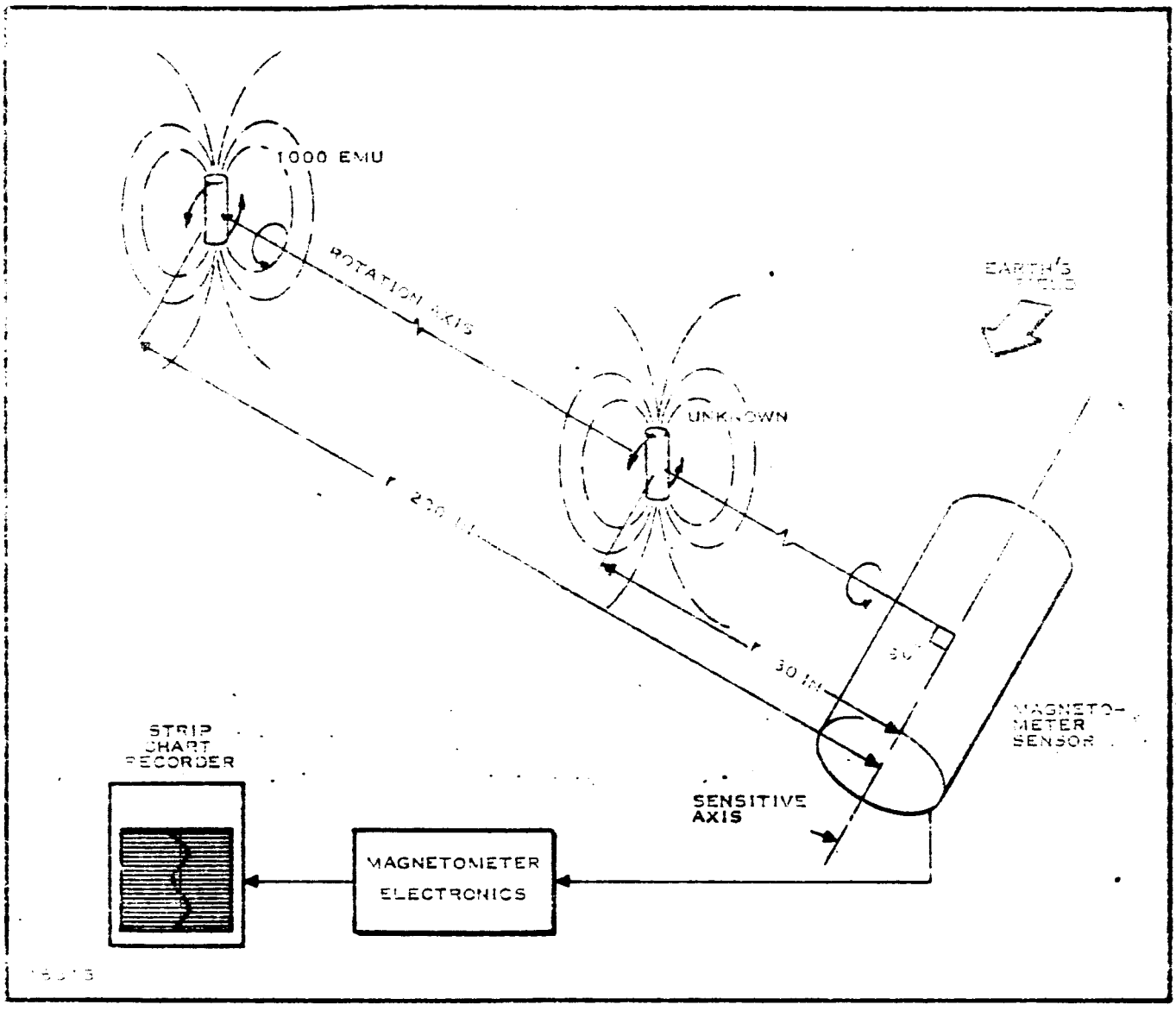


Figure 4-21. Calibration and Measurement Arrangement Showing Unfavorable Position (Example No. 2)

from the magnetometer about a line perpendicular to the sensitive axis of the magnetometer as shown in Figure 4-21. The magnetometer now sees the $B_\theta$ component of the magnet alternately adding to and subtracting from the earth's field. The peak-to-peak signal due to the magnet will be twice the $B_\theta$ component. Thus, for a 1 gamma peak-to-peak signal, $B_\theta = 0.5$ gamma. The magnitude of the $B_\theta$ component is given by Equation E-4-4.

$$B_\theta = 6.11 \times 10^3 \frac{|\bar{m}|}{r^3} \sin\theta \text{ (gammas)}. \qquad \text{(E-4-4)}$$

This equation is now solved for r when

$$B_\theta = 0.5 \text{ gamma}$$

$$|\bar{m}| = 1000 \text{ CGS units}$$

$$\theta = 90 \text{ degrees.}$$

Solving Equation E-4-4 for r with the above values:

$$r = \sqrt[3]{\frac{6.11 \times 10^3 \, |\bar{m}|}{B_\theta}} \quad \text{(inches)}$$

$$r = 230 \text{ inches.}$$

With the calibration magnet rotating 230 inches from the magnetometer sensor as shown in Figure 4-21, the magnetometer sensitivity is adjusted to indicate a 1 gamma peak-to-peak reading on the recorder. The chart trace will be sinusoidal, corresponding to the rotation of the calibration magnet.

2. Determination of Unknown Dipole Moment

The moment of the unknown dipole may now be found by rotating the magnetized sample in a manner similar to that in which the calibration magnet was rotated but at a distance which will give a convenient reading on the magnetometer chart. The sensitivity of the magnetometer should be set so that the magnetized sample may be rotated as far as possible from the magnetometer and still give an accurate reading. Suppose the unknown dipole gives a p-p reading of 2.6 gamma at r = 30 inches. The $B_\theta$ component will be half this reading, or 1.3 gamma. Since $B_\theta$ and r are known, the magnitude of the unknown dipole moment may be found from the same equation used in calibration (with $\theta = 90°$).

$$B_\theta = 6.11 \times 10^3 \frac{|\bar{m}|}{r^3} . \qquad \text{(E-4-4)}$$

Solving for $|\bar{m}|$,

$$|\bar{m}| = \frac{B_\theta \, r^3}{6.11 \times 10^3} \quad \text{(CGS units).}$$

The values of $B_\theta$ and r were found to be

$$B_\theta = 1.3 \text{ (gammas)}$$

$$r = 30 \text{ (inches).}$$

## SECTION V

## MEASUREMENT METHODS

### A. INTRODUCTION

The field of magnetic measurements can be divided into two very general classifications, high-field and low-field measurements; however, the line that divides them is somewhat arbitrary.

Measurements made in ambient magnetic field intensities greater than one oersted can be considered high-field measurements. Such measurements are usually made to determine the properties of ferromagnetic materials used in electrical machinery, transformers, inductors, meters, magnetic amplifiers, electromagnets, computer memories, and similar devices. Several measurement techniques used in high-field work will be discussed briefly at the end of this section; however, they are of limited importance to the purposes of this handbook.

Until recently, the most important use of low-field magnetic measurements has been in investigations of geomagnetism or terrestrial magnetism.* Scientists have studied changes in the earth's magnetic field, which varies geographically from approximately 0.25 to 0.75 oersted (25,000 to 75,000 gammas). Oil companies have found airborne magnetic anomaly detectors (MAD) and ground-based magnetometers quite useful in their geological surveys. More recently, airborne MAD has been used by the military as a valuable tool in antisubmarine warfare.

One of the lesser known uses of low-field magnetic measurements is in archaeology. It has been found that magnetic techniques provide a rapid and sensitive means of locating and dating the remains of earlier civilizations. The newest area of low-field magnetics is the use of spacecraft-borne magnetometers to measure planetary and interplanetary magnetic fields. One of the more widely publicized accomplishments in this area was the determination, by the Mariner II magnetometer, that the planet Venus has no significant magnetic field.

The search for nonmagnetic electronic components was begun by designers of MAD equipment in order to make their magnetometers more sensitive. Component development and testing will be greatly accelerated as an increasing number of deep-space probes carry requirements for nonmagnetic components. This section of the handbook will briefly describe various measurement devices and techniques used in low-field magnetic measurements, and their advantages and disadvantages for electronic component measurements.

---

*The term "low-field magnetometer" has been used to describe devices intended for measurement of interplanetary and deep-space magnetic fields in the order of 0 to 300 gammas.

## B. MAGNETIC FIELD MEASUREMENT DEVICES

### 1. General

The two basic methods used to measure a magnetic field are

- Mechanical force exerted on a current-carrying conductor in a magnetic field
- Induced electromotive force (emf) produced in a conducting loop by a change in magnetic flux linking the loop.

The quantity measured in both of these methods is actually magnetic flux density ($\overline{B}$). If the measurements are made in vacuum or air, however, and the CGS-EMU system is used in expressing the results, magnetic flux density and magnetic field intensity ($\overline{H}$) are numerically equal.

Additional methods by which magnetic fields may be measured include the

- Change in electrical resistance of some materials due to the presence of a magnetic field
- Hall effect
- Behavior of saturable magnetic cores in a magnetic field
- Nuclear magnetic resonance.

### 2. Pivoted Coil Gaussmeter

In a standard d'Arsonval meter movement, the deflection of a coil in the field of a permanent magnet is a measure of the current in the coil. If the magnetic field to be measured is substituted for the field of the permanent magnet, the current required to produce a standard deflection of the meter is a measure of the field strength.

The pivoted coil gaussmeter may be used to measure flux densities greater than approximately one gauss. Its major limitation is that the field must be uniform throughout the volume occupied by the coil. Therefore, it is not applicable to measurements of fields produced by small objects, such as electronic components.

### 3. Pivoted Magnet

A gaussmeter may also be made by supporting a small, high-coercivity permanent magnet between jewel bearings. The field may be measured in terms of the torque exerted on the magnet. The magnet is connected to a hairspring and pointer mechanism. Like the pivoted coil, the pivoted magnet is applicable to measurements of fields above one gauss and is therefore not sufficiently sensitive for electronic component measurements.

4. Flip Coil

If a test coil is placed in a magnetic field with its axis in the direction of the field, a change will occur in the flux linking the coil if the coil is abruptly rotated or "flipped" 180 degrees. The current impulse produced by this change in flux can be measured with a ballistic galvanometer connected to the coil. The galvanometer deflection is then proportional to the magnetic flux density.

The flip coil system must be calibrated by measuring the deflection of the galvanometer when the coil is rotated in a known field of a standard inductor or a Helmholtz coil system. The number of turns required for sufficient sensitivity also makes the flip coil too large and unwieldy for component measurement

5. Rotating Coil

The rotating test coil method is basically an extension of the flip coil method and operates on the same principle. The voltage induced in a test coil continuously rotated about its diameter in a magnetic field is proportional to the rate of change of flux linking the coil. The ac voltage produced may either be observed on an oscilloscope or commutated and measured on a dc instrument. In either case, the apparatus must be calibrated by observing the signal produced in a known field.

The test coil is usually attached to a long shaft which in turn is driven by a synchronous motor. The shaft must be long enough to avoid errors due to stray fields from the motor and drive mechanism. The sensitivity of this method is somewhat greater than that of the flip coil, since the induced voltage increases with rotation frequency. The accuracy of the measurement depends directly on the accuracy of the motor drive power.

6. Astatic Magnetometer

In its simpliest form, an astatic magnetometer consists of two magnets of equal strength fixed rigidly at either end of a rod about four inches long. The entire assembly is suspended by a fine fiber of quartz or phosphor bronze. This is shown in Figure 5-1.

With the two magnets mounted in opposition (Figure 5-1), the torque due to the earth's magnetic field on the upper magnet is exactly cancelled by the torque on the lower magnet. If a magnetized sample is placed four inches below the lower magnet, its field will exert a greater torque on the lower magnet than on the upper magnet. The resulting deflection can be measured by measuring the deflection of a light beam directed at the mirror. The amount of deflection depends on the magnitude of the field, the restoring torque of the quartz fiber, and the degree of matching of the two magnets.

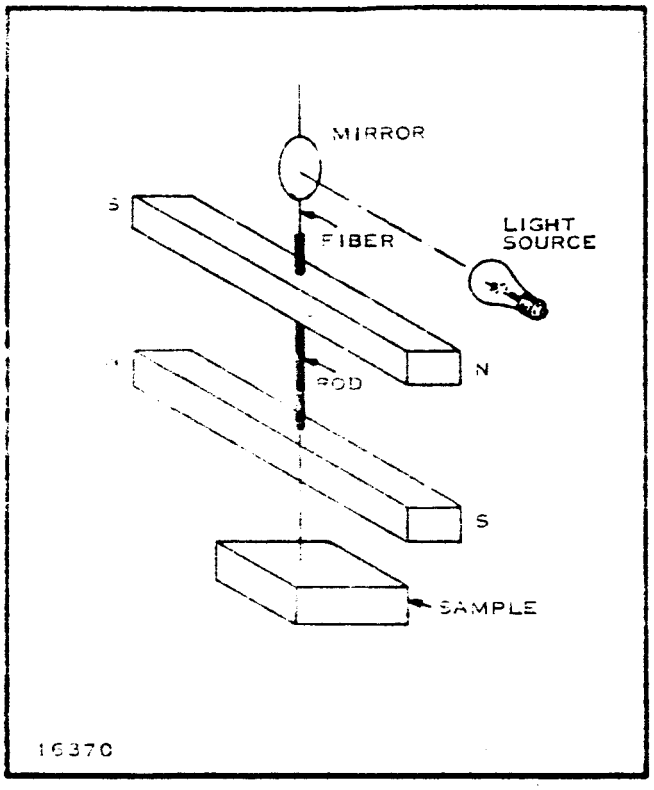


Figure 5-1. Astatic Magnetometer

[illegible] extremely sensitive vector device which yields the component of the sample's magnetic field in the direction of the suspension fiber. This device is affected by vibration and by locally produced magnetic fields such as steel-frame buildings or movable masses of iron. This method is applicable primarily to the measurement of small samples of regular dimensions [illegible] could also be used for [illegible] component field measurements. It is used chiefly by archaeologists and geologists for studies of rock magnetism. Advanced models are capable of sensitivities in excess of [illegible] milligamma.

7. Spinner Magnetometer

A logical corollary of a coil rotating near a fixed sample is the rotation of a sample in the center of a pickup coil. The voltage induced in the coil is a function of the sample's magnetic field, speed of rotation, number of turns on the coil, and coil geometry. This method yields vector field information; the sample must therefore be rotated in three mutually perpendicular planes to obtain the total field.

Like the astatic magnetometer, spinner magnetometers are used primarily in studies of rock magnetism. In this field, the [illegible] samples permits very high rotation rates (usually obtained by [illegible] turbine). Since the voltage induced in the coil is a function of frequency, high sensitivity results. Spinner magnetometers may be calibrated with a magnetized needle of known moment.

Spinning magnetometer methods are applicable to electronic component measurements; however, due to the larger size of these components, lower rotation frequencies must be used. The main advantage of this method is that the signal representing the magnetic field intensity of the sample is an ac voltage which may readily be amplified. By using an amplifier with a relatively narrow bandpass, the effects of electrical background noise and extraneous background disturbances may be greatly reduced.

8. Bismuth Spiral

[illegible] piece of high-purity bismuth wire is coiled into a spiral and placed [illegible] transverse magnetic field, its electrical resistance will change

as a function of the field intensity. Major limitations of this method are that it is sensitive only to large changes in magnetic field and that bismuth has two temperature coefficients. Not only does bismuth have the ordinary temperature coefficient in the absence of a magnetic field, but also the change in resistance due to the presence of a magnetic field depends on the temperature. For these reasons, bismuth spirals are very seldom used in magnetic testing.

9. Hall Effect Magnetometers

If a thin strip of metal has a current flowing in it, two points exist at opposite ends of a line perpendicular to the flow of current which will be at the same electrical potential in the absence of a magnetic field. A difference in potential occurs between these two points if a magnetic field is applied at right angles to the plane of the strip. This difference in potential is proportional to the magnetic field intensity. This is the well-known Hall effect which, for lack of a suitable material, was little more than a theoretical curiosity until recent years. For greater ease of signal amplification, present day devices use an alternating current through a strip of bismuth, indium antimonide or indium arsenide. The sensitivity of Hall effect magnetometers is at present limited to about 100 gammas; they are therefore not sufficiently sensitive for electronic component measurements.

10. Saturable Core Magnetometer

A saturable core is one composed of a material (such as mumetal or permalloy) which reaches practical saturation under the influence of a relatively low magnetic field intensity. A magnetometer is made by energizing a single core with an alternating current by means of a center-tapped winding on the core. This excitation current switches the core between positive and negative saturation points on its hysteresis loop. If an external magnetic field is present, more current will be required to drive the core into positive saturation than into negative saturation, or vice versa. This unbalance appears as a second harmonic of the excitation frequency. The amplitude of the second harmonic signal is proportional to the magnetic field intensity of the ambient field. The magnetic field is usually determined by measuring the second harmonic signal, thereby obtaining a voltage proportional to the external magnetic field, or by measuring the direct current which must be applied to null out the second harmonic signal. Knowing the number of turns and the coil geometry, a strip chart recorder readout may be obtained directly in terms of the vector component of field intensity. The sensitivity of this type of device is somewhat better than 0.1 gamma which is quite satisfactory for electronic component testing.

11. Flux-Gate Magnetometer

The flux-gate is essentially a modification of the saturable core magnetometer and operates on the same principle. The flux-gate usually uses a bridge circuit composed of two parallel cores and a drive transformer, or of

four cores. An alternating current is applied to the bridge to swing the cores into and out of saturation. The presence of an external magnetic field appears as the second harmonic of the excitation frequency, as in the saturable core magnetometer. Flux-gate magnetometers yield vector field information and are quite useful in testing of electronic components.

12. Proton-Precession Magnetometer

Operation of the proton-precession magnetometer is based on the precession frequency of protons in a sample of distilled water or a convenient hydrocarbon such as kerosene. The precession frequency is directly proportional to the total ambient magnetic field. In practice, a dc current is applied to the water sample to produce a polarizing magnetic field of several hundred oersteds. When the polarizing field is switched off, the precession frequency may be measured with an electronic counter. The value of the ambient magnetic field is then calculated from the precession frequency.

The sensitivity of the proton-precession magnetometer is about 0.1 gamma under ideal conditions. Continuous field measurements are not possible, since the water sample must be repolarized before each reading. This device is therefore not applicable to electronic component testing.

13. Metastable Helium Magnetometer

As the name implies, this device uses helium atoms in their metastable state. The principle of operation of the helium magnetometer depends upon the ability of a 1-micron light to orient the helium atoms by the process of optical pumping. In a weak magnetic field, the metastable state of the helium atoms splits into three Zeeman sublevels whose energy separation is directly proportional to the magnetic field intensity. Application of rf energy at the proper frequency produces a resonance signal observable as a reduced transparency of the helium. This signal acts as an error signal in a feedback loop to control the frequency of the rf oscillator. Since the required oscillator frequency varies with the ambient magnetic field intensity (approximately 28 cps per gamma), the oscillator frequency provides a direct measure of field intensity. Signal processing circuitry provides an analog output to a strip chart recorder.

The metastable helium magnetometer is a total field device (as opposed to a vector field magnetometer) and is usually calibrated by means of a rotating magnet of known moment. It is a continuous reading magnetometer capable of detecting changes in the total field in the order of 0.01 gamma. This type magnetometer is very satisfactory for electronic component measurements, although, as in most sensitive magnetometers, care must be taken to prevent interference from locally produced magnetic fields.

14. Rubidium Vapor Magnetometer

The rubidium vapor magnetometer operates on the principle of Zeeman splitting of optically pumped rubidium energy levels in the presence of a magnetic field. It is similar in operation to the metastable helium magnetometer, except that a self-oscillator is used instead of a feedback-controlled oscillator. It too is applicable to electronic component testing.

## C. MEASUREMENT OF ELECTRONIC COMPONENT MAGNETISM.

The previous section has briefly surveyed the field of devices available for low-field measurements of magnetic flux density ($\overline{B}$) and magnetic field intensity ($\overline{H}$). As noted, some of these devices are applicable to component testing and some are not. This section will discuss some of the techniques and considerations involved in making these measurements.

One of the goals of the contract under which this handbook was written was to determine a preferred method for measuring the magnetic effects of electronic components. The prime considerations for a "preferred" method included accuracy, repeatability, simplicity, high sensitivity (in the order of 0.1 gamma), and relatively low cost. It was also considered highly desirable, although not mandatory, that the measurement system operate in a laboratory environment without elaborate field cancellation mechanisms. The "modified spinner" method described below fulfills these requirements.

### 1. Modified Spinner Method

The apparatus required for this method is shown in Figure 5-2. This method takes advantage of the best characteristics of several of the devices previously described.

The electronic component to be tested is placed in a sample holder and is rotated at approximately five revolutions per second. A Hewlett-Packard Model 3529A Magnetometer Probe senses the vector component of the sample's magnetic field which is parallel to the cylindrical axis of the probe. The combination of the probe and a Hewlett-Packard Model 428B Clip-on DC Milliammeter forms a fairly sensitive flux-gate magnetometer. The 428B provides a low-impedance 5-cps output signal proportional to the component magnetic field intensity. This signal is applied to a high-impedance two-channel strip chart recorder through a bandpass filter which reduces the effects of low-frequency interference (changes in the geomagnetic field intensity and locally produced magnetic fields such as equipment being moved) and high-frequency interference (especially magnetic fields at 60-cps and 400-cps power frequencies so often found in laboratories). An event marker is used to relate the direction of the sample's magnetic field to the physical dimension of the sample.

The spinning mechanism consists of a 1500-rpm fan motor and suitable pulleys to give approximately a 5-cps rotation frequency. It is essential that all parts of the spinner which rotate or touch be nonmagnetic. If they are not

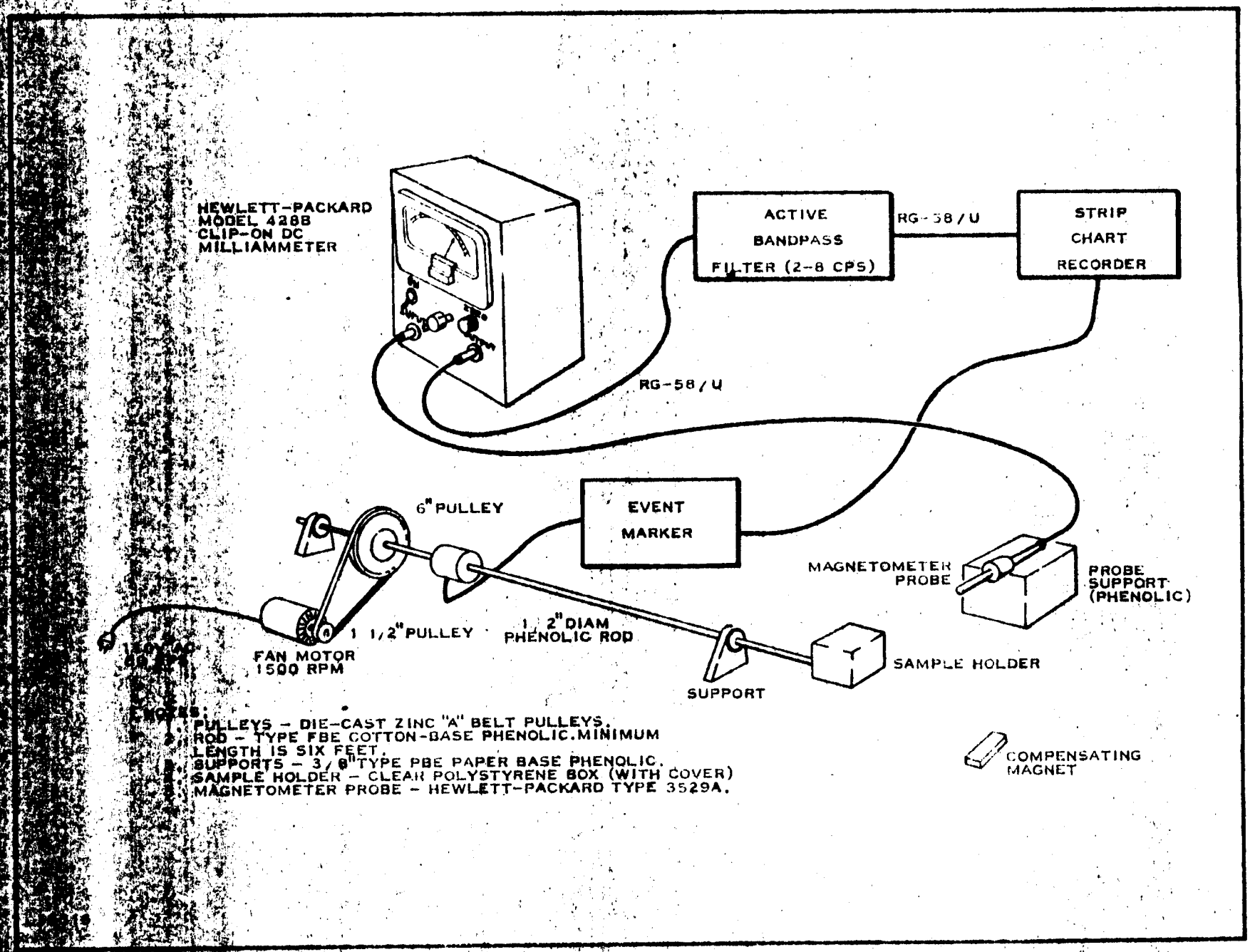


Figure 5-2. Component Measurement Test Setup

the spinner itself will produce a 5-cps magnetic field. The rotating rod and all supports are therefore made of phenolic or wood. The rod itself must be at least six feet long to avoid stray fields due to the motor and drive mechanism. Both pulleys are die-cast zinc, and the larger pulley should be spoke-type rather than solid to reduce eddy current fields. The sample holder is a polystyrene box secured to the phenolic rod with a 6-32 aluminum or nylon screw. The rod is drilled and tapped for a 6-32 beryllium copper heli-coil insert. The component sample is held in place in the sample holder with a nonmagnetic foam rubber or plastic (such as virgin polyurethene foam).

The magnetometer probe is normally furnished with a cable seven feet long, but longer cables are available. A cable 25 feet long is preferable, since this allows the operator to make adjustments without his movements affecting the field at the probe. Since the 3529A probe is a vector field sensor, the effect of the geomagnetic field (approximately 50,000 gammas in the United States) may be reduced by orienting the probe orthogonally to the geomagnetic field. The probe tip is placed a standard distance from the center of the sample holder; if the probe-to-sample distance is at least three times the largest dimension of the sample, the inverse cube relationship (see Section I, Origin of Magnetic Effects, page 1-16) will hold and the equivalent field may be computed at any distance. A probe-to-sample separation of 12 inches should be adequate for most measurements.

The conversion factor of the 3529A probe is 1:1, producing a reading from 428B in milliamperes which is directly equal to the measured field strength in milligauss. Full-scale deflection on the 1-milliampere scale therefore corresponds to 100 gammas. The sensitivity of the flux-gate is limited to 1 gamma by the meter scale of the 428B, but this may be appreciably improved by applying the magnetometer output to a high-sensitivity recorder such as the Sanborn Model 150 with Stabilized DC Preamplifier Model 150-1800. Sensitivity in excess of 0.1 gamma has been achieved by this method.

A compensating magnet is used to produce a static magnetic field sufficient to allow the 428B to operate on its most sensitive scale. It serves to buck out or oppose ambient fields due to nearby equipment. A small meter magnet works quite well for this purpose.

The event marker may be a microswitch that is tripped once per revolution of the rod. The switch controls a battery which applies a marker to the chart recorder each time the switch is tripped.

The apparatus is calibrated by manually rotating a small magnet, noting the meter deflection on the 428B, and adjusting the recorder sensitivity for the equivalent deflection.

The major precaution to be taken with this method is to avoid local disturbances (such as moving equipment) which will cause the 428B meter to swing off scale. This will not harm the instrument since the circuit automatically limits overloads. Such a disturbance will, however, disrupt the output signal from the 428B to the recorder.

Although only one device has been described here, this method can be used with other flux-gate and saturable core systems, the metastable helium magnetometer, or the rubidium vapor magnetometer.

2. Testing in a Coil System

In most component test methods, it is necessary to perform the actual testing in a region of zero magnetic field. One method by which a zero field may be achieved is with a suitable coil system aligned with the earth's magnetic field so that the field at the center of the coil system is equal in magnitude and opposite in direction to the geomagnetic field. A Helmholtz coil pair (see Section IV, formula E-2-1) may be used if a relatively small homogeneous volume is required. If a larger and more uniform homogeneous volume is required for a given coil diameter, a Fanselau coil system should be used (see Section IV, formulas E-3-1 and E-3-2).

A turntable is usually placed at the center of the coil system. In some cases, the turntable may rotate in zenith as well as in azimuth. Usually, however, the component position is changed to obtain complete vector information. In both methods, the turntable and component are slowly rotated through 360 degrees and the magnetic field measured with some form of a magnetometer sensor placed a fixed distance from the component. The metastable helium, rubidium vapor, saturable core, and flux-gate magnetometers may be used with this method. If a saturable core or flux-gate system is used, the field measured is the vector component of the sample's field projected upon the sensitive axis of the magnetometer sensor. If a metastable helium or rubidium vapor device is used, the field measured is the change in total field produced by the field of the rotating sample. Readout is normally made on a strip-chart recorder or an X-Y plotter.

As with the previous method, care must be taken to make the turntable and drive mechanism nonmagnetic and to avoid extraneous field disturbances. Since the coil system is driven with direct current, a change in the ambient field (such as the field of a nearby power cable) without a compensating change in coil current will affect the zero field condition at the center of the coil system.

3. Testing in a Shielded Enclosure

The other method by which the ambient field may be reduced is with a shielded enclosure (sometimes called a flux tank). An enclosure usually consists of two or more nesting magnetic shield cans (although some attenuation may be achieved with a single can). The design and construction of the shield cans is quite critical and appreciably affects the resulting attenuation of the ambient magnetic field. The degree of attenuation depends on the type of shielding material used, the thickness of the material, the [illegible]

Testing is performed by placing a magnetometer sensor at the bottom of the shielded enclosure and either manually or mechanically rotating the electronic component a known distance from the sensor. The vector component of the sample's magnetic field (for a saturable core or flux-gate system) or the change in total field (for a metastable helium or rubidium magnetometer) is read out on a strip-chart recorder. As in the previous methods, care must be taken to eliminate moving magnetic objects (wristwatches, rings, etc.) in the vicinity of the magnetometer sensor.

## D. INDIRECT MEASUREMENTS

The low-field measurements described in the previous section are direct measurements of the magnetic field intensity of a sample. As such, they are the most meaningful measurements in the area of electronic component testing.

In testing materials for electronic components, it is sometimes impractical to make direct field intensity measurements. It then becomes necessary to make indirect measurements of the magnetic properties of these materials. These include determination of the permeability of strong paramagnetic ($\mu$ less than 4) materials and ferromagnetic materials and the susceptibility of paramagnetic and diamagnetic materials. Since there is little applicability of these methods to low-field component testing, very brief mention will be made of these methods in this handbook. More complete discussions are available in the publications listed in Section VI, References.

### 1. Permeability Measurements

Direct current testing is normally performed on ferromagnetic materials to determine the hysteresis loops and magnetization curves of the materials. The desired permeability (see Section II, Glossary) is then computed from the test data. The required data may be taken either by using suitably shaped samples of the material (such as rings or straight bars) which make up the entire metallic part of the magnetic circuit or by using a permeameter. A permeameter is a magnetic circuit provided with magnetizing and test windings in which a material sample can be inserted so as to form a part of the circuit.

#### a. Ring Method

Primary and secondary windings are wound on a ring-shaped material sample. A known magnetic field intensity is applied to the primary and the resultant flux density computed from the reading of a ballistic galvanometer in the secondary circuit. The advantages of the ring method are the absence of air gaps and end effects, but it is subject to errors due to nonuniformity of the sample and winding irregularities. This method is not suitable for materials with a high [illegible] [illegible]

b. Straight Bar and Solenoid

Flux density may also be determined by ballistic methods for a solenoid wound around a straight bar of the sample material. In this case, however, it is much more difficult to determine the magnetic field intensity because the magnetic circuit includes the air space in which the flux lines extend from one end of the bar to the other as well as the bar itself. A demagnetizing factor is employed to account for this effect. This method is not applicable to high-accuracy measurements due to the difficulty of accurately determining the demagnetizing factor.

c. Burrows Permeameter

This permeameter requires two samples with approximately the same dimensions and magnetic characteristics. The magnetomotive force is so distributed that there is negligible leakage from the sample under test. This method is quite sensitive to nonuniformity in the magnetic properties along the length of the test sample. The Burrows permeameter is applicable to magnetic testing with field intensities in the range of 0.1 to 300 oersteds.

d. MH Permeameter

The MH (or medium H, where H is the magnetic field intensity) permeameter overcomes many of the disadvantages of the Burrows permeameter. It requires only a single sample, is simple and rapid to operate, and much less sensitive to nonuniformities in the magnetic properties of the sample. It is accurate to 0.5 percent or 0.05 oersted (whichever is larger) over the range of field intensities from 0.1 to 300 oersteds.

e. High-H Permeameter

The high-H permeameter is used for testing high-coercivity materials over the field intensity range of 100 to 5000 oersteds and is accurate to about one percent over this range. It avoids appreciable heating of the sample by using a very short sample length.

f. Fahy-Simplex Permeameter

The Fahy-Simplex permeameter is widely used in high-field testing because of its ease of operation and simplicity of construction. It uses a bar-shaped sample clamped to a yoke about which the magnetizing winding is wound. A ballistic galvanometer connected to a winding surrounding the sample is used to compute the flux density. This permeameter yeilds average values of the properties of a nonuniform sample. It is not an absolute device and must be calibrated by reference to an absolute instrument or compared to a standard. The Fahy-Simplex permeameter operates over a range of 0.1 to 300 oersteds.

g. Fahy Low-Mu Permeameter

This device is used in testing materials with permeabilities less than 4. It consists of a coil into which the sample is inserted and a slightly larger coil which acts as a compensating winding. When a sample is inside the test coil and the magnetizing current is reversed, the deflection of a ballistic galvanometer in the circuit is proportional to the magnetic flux density. The Fahy Low-Mu permeameter operates over a range of 0.1 to 300 oersteds.

2. Susceptibility Measurements

The measurement of magnetic susceptibility requires much more sensitive apparatus than is needed for permeability measurements. As a result, the sample size is usually quite small. Magnetic susceptibility may be determined by induction methods but, for accuracy, is usually determined by measuring the mechanical forces experienced by a sample placed in a nonuniform magnetic field.

a. Gouy Method

In this method, the material to be tested must be in the form of a rod of uniform cross section or as a solution of finely ground powder which can be placed in a glass tube of uniform cross section. The sample is suspended with its axis vertical from one arm of a sensitive balance so that its lower end is near the midpoint of the magnetic field between two flat pole pieces of an electromagnet while its upper end is in a region well outside the gap. The sample is weighed first with the electromagnet turned off and then with the magnet energized. The susceptibility is calculated from the force of the field on the sample, the flux density, and the cross-sectional area of the sample. Relative calibration is obtained by comparison against a known paramagnetic substance such as Mohr's salt.

b. Faraday Method

This method is useful for measurement of the susceptibility of samples too small for the Gouy method. It is based on the principle that a small sample of magnetically isotropic material experiences no mechanical force when placed in a uniform magnetic field but does experience a force in the presence of a field gradient. This apparatus requires carefully shaped electromagnet pole pieces and optical measurements of the suspension beam's deflection.

c. Quartz Fiber Susceptibility Balance

This device uses a quartz spring to support a sample tray containing minute quantities of the material to be tested. The sample is

turned on. The susceptibility is calculated from the spring constant, the mass of the sample, the maximum flux density between the pole pieces, and the area under the curve of sample displacement versus distance of the sample from the magnet. This method is applicable to milligram and submilligram samples of diamagnetic and paramagnetic materials. Operating in a vacuum, the accuracy of this method is about 2 percent.

## SECTION VI

## REFERENCES


Magnetic Theory, General

1 F. W. Sears, Electricity and Magnetism (Addison-Wesley Publishing Co., Inc., 1956).

2 E. M. Pugh and E. W. Pugh, Principles of Electricity and Magnetism (Addison-Wesley Publishing Co., 1960).

3 A. S. Kompaneyets, Theoretical Physics (New York: Dover Publications, Inc., 1962).

4 B. I. Bleaney and B. Bleaney, Electricity and Magnetism (Oxford University Press, 1957).

5 E. Hallen, Electromagnetic Theory (Chapman and Hall, 1962).

6 W. T. Scott, The Physics of Electricity and Magnetism (New York: John Wiley and Sons, Inc., 1959).

7 J. A. Stratton, Electromagnetic Theory (New York: McGraw-Hill Book Co., Inc., 1941).

8 W. K. H. Panofsky and M. Phillips, Classical Electricity and Magnetism, (Addison-Wesley Publishing Co., Inc., 1955).

9 M. Planck, Theory of Electricity and Magnetism (London: Macmillan and Co., Ltd., 1932).

10 R. B. Leighton, Principles of Modern Physics (New York: McGraw-Hill-Book Co., Inc., 1959).

11 G. P. Harnwell and J. J. Livingood, Experimental Atomic Physics (New York: McGraw-Hill Book Co., Inc., 1961).

12 R. Plonsey and R. E. Collins, Principles and Applications of Electromagnetic Fields (New York: McGraw-Hill Book Co., Inc., 1961).

13 "Methods of Electromagnetic Interference – Free Design and Interference Suppression," Vol. 3 of Handbook on Radio Frequency Interference (Frederick Research Corp., 1962).

14 R. L. Sanford and L. R. Cooper, "Basic Magnetic Quantities and the Measurement of the Magnetic Properties of Materials," National Bureau of Standards Monograph [illegible] (1959).

17 W. Braunbek, "Die Erzeugung von [illegible] homogener Magnetfelder durch Kreisströme," Zeitschrift für Physik, Vol. 88 (1934).

18 L. B. Loeb, "Fundamentals of Electricity and Magnetism (John Wiley and Sons, Inc., 1938).

Thermoelectric Effects

19 P. H. Egli, ed., Thermoelectricity (New York: John Wiley and Sons, Inc., 1960).

20 R. R. Heikes, Thermoelectricity (New York: Interscience Publishers, John Wiley and Sons, Inc., 1961).

Units and Conversion Tables

21 See Reference 1.

22 See Reference 2.

23 See Reference 4.

24 See Reference 7.

25 See Reference 5.

26 See Reference 8.

27 See Reference 15.

28 T. S. Gray, Applied Electronics, The Technology Press (MIT) (New York: John Wiley and Sons, Inc., 1954).

29 "Tentative Definitions of Terms, Symbols, and Conversion Factors Relating to Magnetic Testing," ASTM Designation A340-61T, Standards of the American Society for Testing and Materials, Part 3 (1961).

30 H. P. Westman, ed., Reference Data for Radio Engineers (International Telephone and Telegraph Corp., fourth edition, 1956).

31 C. D. Hodgman, ed., Handbook of Chemistry and Physics (Chemical Rubber Publishing Co., 1962).

32 "Symbols and Units: Report of the SUN Commission of the IUPAP," Physics Today, Vol. 9, No. 11 (November 1956).

33 "SUN Commission Report, Document 56-7," Physics Today, Vol. 10, No. 3 (March 1957).

34 F. B. Silsbee, "Establishment and Maintenance of the Electrical Units," National Bureau of Standards Circular 475 (1949). [illegible] Magnetic Units and Measurements [illegible]

35 See Reference 4.

38 T. Spooner, Properties and Testing of Magnetic Materials (New York: McGraw-Hill Book Co., Inc., 1927).

39 F. B. Doane, Principles of Magnaflux Inspection (Photopress, Inc., 1941).

40 L. F. Bates, Modern Magnetism (London: Cambridge University Press, John Wright and Sons, Ltd., 1951).

41 M. J. Aitken, Physics and Archaeology (New York: Interscience Publishers, John Wiley and Sons, Inc., 1961).

42 "Operating and Service Manual, 428B Clip-On Milliammeter and 3529A Magnetometer Probe" (The Hewlett-Packard Company, 1962).

43 W. A. Geyger, "The Ring-Core Magnetometer-A New Type of Second-Harmonic Flux-Gate Magnetometer," AIEE Transactions (March 1962).

44 N. F. Ness, "PIQSY Magnetic Field Experiment Spacecraft Restraints" (NASA Goddard Space Flight Center, May 1963).

45 A. R. Keyser, J. A. Rice, and L. D. Schearer, "A Metastable Helium Magnetometer for Observing Small Geomagnetic Fluctuations," Journal of Geophysical Research (December 1961).

46 T. L. Skillman and P. L. Bender, "Measurement of the Earth's Magnetic Field with a Rubidium Vapor Magnetometer," Journal of Geophysical Research (September 1958).

47 "Standard Methods of Test for Normal Induction and Hysteresis of Magnetic Materials," ASTM Designation A341-55, Standards of the American Society for Testing and Materials, Part 3 (1961).

48 "Tentative Methods of Test for Permeability of Feebly Magnetic Materials," ASTM Designation A341-60T, Standards of the American Society for Testing and Materials, Part 3 (1961).

49 J. A. McMillan, "Equipment for Determination of Magnetic Susceptibility," American Journal of Physics (May 1959).

50 F. F. Senftle, M. D. Lee, A. A. Monkewicz, J. W. Mayo, and T. Pankey, "Quartz Helix Magnetic Susceptibility Balance Using the Curie-Cheveneau Principle," Review of Scientific Instruments (May 1958).