13P

125

.7

Technical Report No. 32-559

# Thermal Conductivity and Radiant Energy Transport Apparatus for Nonelectrical Conductors to 2000° C

Martin H. Leipold

001

FACILITY FORM 602

N64-28966 (ACCESSION NUMBER)

(THRU)

13 (PAGES)

1 (CODE)

CR 58132 (NASA CR OR TMX OR AD NUMBER)

15 (CATEGORY)

JET PROPULSION LABORATORY
CALIFORNIA INSTITUTE OF TECHNOLOGY
PASADENA, CALIFORNIA

June 1, 1964

OTS PRICE

XEROX $ 1.60 ph

MICROFILM $ _____

*Technical Report No. 32-559*

# *Thermal Conductivity and Radiant Energy Transport Apparatus for Nonelectrical Conductors to 2000°C*

*Martin H. Leipold*

C. Levine, Chief
*Materials Section*

JET PROPULSION LABORATORY
CALIFORNIA INSTITUTE OF TECHNOLOGY
PASADENA, CALIFORNIA

June 1, 1964

Copyright © 1964
Jet Propulsion Laboratory
California Institute of Technology

Prepared Under Contract No. NAS 7-100
National Aeronautics & Space Administration

## CONTENTS

I. Introduction . . . . . 1

II. Apparatus Design and Construction . . . . . 1

III. Thermal Conductivity Specimen . . . . . 4

IV. Operating Procedure . . . . . 5

V. Data Reduction . . . . . 6

VI. Calibration and Evaluation . . . . . 6

References . . . . . 8

## FIGURES

1. Schematic view of thermal conductivity measurement technique . . . 2

2. Schematic view of radiation detector head . . . . . 4

3. Configuration of thermal conductivity specimen . . . . . 5

## ABSTRACT

28966

An apparatus for measuring the thermal conductivity of nonelectrical conductors to approximately 2000°C is described. A direct measurement technique is employed, with radial heat directed through a thick-walled cylinder. Heat is applied at the center of the cylinder by means of a refractory metal heater. The temperature gradient is measured in a series of longitudinal holes, located at varying distances from the center of the specimen. An error analysis has been conducted for random errors, which indicates precision to be between $\pm 5$ and $\pm 10\%$. Systematic errors are also discussed.

The apparatus has been in operation for over a year, and approximately 150 runs have been completed. Results agree with published values for materials investigated, and the nature of the high-temperature anamolous behavior is under analysis.

It should be pointed out that operation is extremely slow for several reasons. First, the technique is inherently slow because of the heating and cooling rates required, and the time to reach thermal equilibrium. Second, considerable care is required to properly align the specimen in the apparatus. Third, runs are not infrequently aborted or discarded because of improper sighting of the specimen or failure of the specimen resulting from thermal stresses.

To permit an evaluation of a popular theory for anomalous thermal conductivity, a device is incorporated to study the radiant energy being transmitted through the specimen. The measurement of this energy is made concurrently with the thermal conductivity measurement. Radiation energy being emitted from the surface or near surface of the specimen is determined over a wave-length range of 0.4 to 2.0 $\mu$.

Author

# I. INTRODUCTION

The measurement of thermal conductivity of materials which are not electrical conductors, at temperatures above 1000°C, requires the utmost care in the design of equipment and the operation of such equipment. The information obtained from such thermal conductivity data is becoming of considerable interest in today's technology. Engineering applications of materials at temperatures well above 1000°C are proposed with increasing frequency. Consequently, precise information is needed. Thermal conductivity values are needed especially for nonelectrical conductors, because these materials are most commonly used as thermal insulators.

Of even greater fundamental interest is the understanding of the mechanism by which these materials transmit heat. In the temperature range below approximately 1000°C, proposed theories for thermal conductivity have been well supported by observations (see Refs. 1, 2, 3, and 4). In this temperature region, heat is transmitted through the materials by means of lattice vibrations. The resistance to flow is the result of the anharmonic nature of the vibrations. At higher temperatures, theoretical and experimental results no longer show such excellent agreement. Experimental results show a thermal conductivity that is significantly higher than that which would be predicted by lattice conductivity, and this deviation has been the source of numerous investigations (Refs. 1, 5, and 6). Without a knowledge of the mechanisms by which heat is transmitted in these electrical nonconductors at temperatures above 1200°C, there is little possibility for controlling the thermal conductivity of existing materials. The test apparatus described in this report was designed to evaluate the nature of this high temperature conductivity.

Since the primary goal of this investigation was to explain the nature of the anomalous thermal conductivity encountered in lattice conductors, capability was included in the design of the equipment to evaluate one of the presently held theories of anomalous conductivity, that of radiant transfer through translucent materials (Ref. 6 and 7). Consequently, observation was made of the quantity and distribution of radiant energy being transmitted through the specimen.

# II. APPARATUS DESIGN AND CONSTRUCTION

Upon consideration of the various techniques available for the study of thermal conductivity, several choices were readily eliminated. Transient techniques in general were felt to be unsuitable for these lattice thermal conductor materials because of their high susceptibility to thermal shock damage. Many of the various steady-state techniques were also discarded. Methods based on a comparison of the unknown material with a known standard were not applicable because of the lack of satisfactory standards for these temperatures and because of problems of reaction between standard material and test material at high temperatures. Linear heat-flow techniques were felt to be unsuitable because of the extreme difficulty in guarding against thermal losses in the directions perpendicular to those in which the measurements were being made (Ref. 8). Eliminating these various techniques resulted in a choice between biaxial or triaxial flow. In this particular case, biaxial flow was chosen because of the greater ease of specimen preparation and furnace construction.

The thermal conductivity measurement technique was based on radial heat-flow through a thick-walled cylinder. A schematic representation of the system is shown in Fig. 1. The test zone was 1 in. long and was located at the center of the specimen. The electrical power input to this zone was determined by measuring the current flow through the heater tube and the voltage drop across the two voltage probes. The radial temperature gradient was determined by means of measurements in the five longitudinal sight holes (1/16 in. dia) located at various radial distances from the center of the specimen.

The furnace shell employed in this apparatus consisted of a double-walled, water-cooled aluminum cylinder with removable water-cooled end plates. Electrical power to

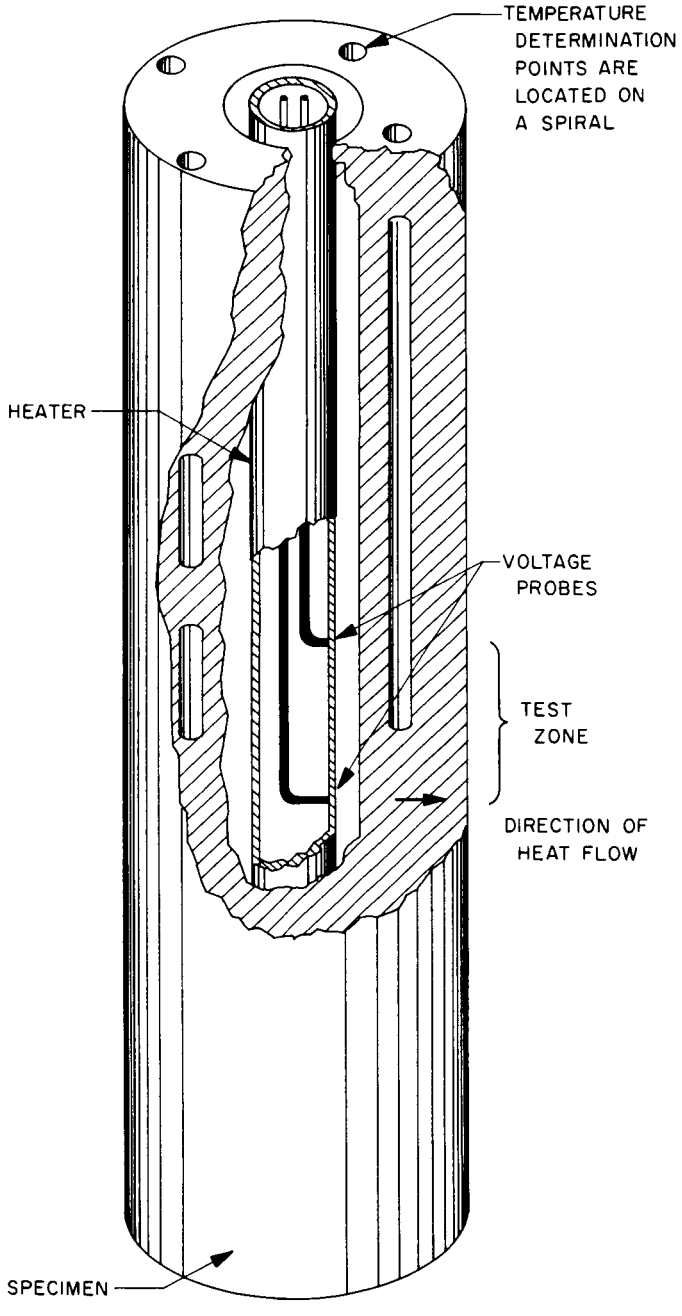


**Fig. 1. Schematic view of thermal conductivity measurement technique**

the furnace was in the form of low-voltage 60-cycle ac power with a maximum of 50 kva available. The heater tube was supported in water-cooled copper chucks held in the end plates. A slip fit was employed between the heater and the chucks to permit movement resulting from thermal expansion. One of the two end plates was electrically insulated by means of a glass-bonded mica disk.

The heater (½ in. dia) was made from either extruded tantalum or pyrolytic tungsten. The voltage probes were spot welded in place in the case of the tantalum or deposited in place in the case of tungsten. The power input to the furnace was adjusted by means of a motor-driven, multi-turned potentiometer controlling a saturable reactor. By means of an on-off timer and a percentage timer controlling the drive motor, semiautomatic operation and controlled heating and cooling rates could be maintained. Control of these rates was necessary to prevent excessive thermal shock to the specimens.

The electrical measurements to determine the power input to the gauge section were made with a vacuum tube voltmeter accurate to one quarter of 1% of the true rms value and a current transformer and ammeter with an American Standards Association accuracy rating of one quarter of 1%.

Above 800°C the temperature gradient through the wall of the specimen was determined by a calibrated optical pyrometer sighting into the longitudinal 1/16-in. dia holes. Sighting to the bottom of such long narrow holes required a large depth of field in the pyrometer. This was obtained with a long-focal-distance lens. The light path was compressed by means of prisms to permit readings to be taken in proximity to the furnace. The large ratio of length of hole at test temperature (approximately 0.5 in.) to diameter (0.060 in.) assured black-body conditions. See Calibration and Evaluation Section for discussion of longitudinal temperature gradient.

To permit some control of the temperature gradient within the specimen, a series of concentric tantalum radiation shields were placed around the specimen within the test chamber. As many as six shields were used in these tests, and they permitted the quantity of heat flowing through the specimen to be varied over a factor of approximately 10.

To protect the refractory metal heater tube and other metal portions of the furnace, it was necessary to operate this apparatus in a nonoxidizing environment. Normally, an atmosphere of purified argon was used, although tests could be conducted in purified helium or a vacuum of the order of $10\mu$. A 15-$ft^3$/min compound mechanical vacuum pump was used for vacuum operation or to exhaust the system for refilling with inert gas.

The inert gas was purified by passing it over magnesium perchlorate to remove water vapor, and a calcium

chip furnace at 650°C to remove hydrogen, oxygen, and any residual water vapor (Ref. 9). This gaseous atmosphere was introduced into the furnace at the point of the optical pyrometer sight window to sweep deposits from this sight window.

To evaluate the radiant transport theory of high-temperature conductivity, provision was made in this test apparatus to measure the magnitude and spectral distribution of radiant energy emitted from the surface or near surface of the specimen. This additional measurement was based on the assumption that the true outside temperature of the specimen could be determined by extrapolating the temperature vs hole location curve. The radial distribution of temperature in a cylinder heated along the axis of the cylinder obeys the well known law for heat flow and is discussed in the Data Reduction Section. Integration of this law reveals that a plot of measured temperature at each of the holes vs the natural logarithm of the radius would yield a straight line and thus may be accurately extrapolated to the radius corresponding to the surface of the specimen. With this knowledge of the true outside surface temperature of the specimen it was possible to compare the magnitude of the radiation at any wave length within the range of 0.4 to 2.0 $\mu$ to that which would be emitted from a black-body at the same temperature. This value would be a spectral emittance of the surface. However, in any case if a significant quantity of radiation were being transported through the solid specimen, i.e., the specimen were becoming transparent, the material producing this radiation would be at a higher temperature, and an increase in the value in the spectral emittance would be observed. In order to include a significant quantity of radiant energy developed by the specimen in the range of 1000 to 2000°C, measurements were made over the wavelength spectrum of 0.4 to 2.0 $\mu$. In the range above 1300°C where analogous conductivity becomes most apparent this wavelength spectrum includes more than a third of all energy emitted.

The increase in spectral emittance, which would be observed because of radiation from the hotter interior of the specimen, could result in apparent emittances greater than one. The depth to which it is possible to see into the semitransparent material would be a function of absorption and scattering of the radiant energy. The absorption would be a fundamental property of the particular material. Based on Kingery's analysis (Ref. 7), the mean free path for photons in MgO due to absorption is calculated to be of the order of centimeters. The scattering of photons may reduce this mean free path to considerably less than this; however, since the scattering is microstructure-dependent, some control of the scattering could be attained.

The apparatus for the determination of the radiant energy emitted from the surface was designed and constructed at the Jet Propulsion Laboratory. It consisted of a radiation detection head, sensitive to the wavelength region of from 0.4 to 2.0 $\mu$, sighted on the surface of the specimen with an output in the form of an alternating electrical signal. This is shown schematically in Fig. 2.

The manually operated shutter in front of the radiation detector sight window was used to prevent buildup of deposits during operation. It was opened only during actual readings of the radiation. The chopper was driven by an hysteresis–synchronous motor, the speed of which is controlled by line frequency to 0.1% accuracy. The optical filters were continuously variable interference filters. Two filters were used—one with transmission continuously graded from 0.4 to 0.7 $\mu$, and a second continuously graded from 0.84 to 2.0 $\mu$. The theoretical band-pass characteristics of these filters were 32 m$\mu$ for the visible range and 85 m$\mu$ for the infrared range. However, because a small but significant range of filter must be employed to obtain a finite signal, the effective band-pass characteristics are slightly greater—45 m$\mu$ for the visible, and 95 m$\mu$ for the infrared. The effective absorption of the various lenses and windows within the radiation detector head were not determined individually, but were taken into account by means of calibration with a black-body specimen. This will be described in the Calibration and Evaluation Section.

The radiant energy was detected by a lead sulfide photo cell, mounted on a heat sink, operated at a constant temperature of 25°C. A blanked-off photo cell was used as a load resistor, and all photo cells were aged before they were used. Bias voltage for the detector was supplied by a stabilized dc supply, accurate to $\pm 1\%$.

The alternating electrical signal from the radiation detector was subsequently amplified, electrically filtered, and indicated on a vacuum-tube voltmeter. By mechanically locating the optical filters to correspond with various wavelengths, a measure of signal strength vs wavelength could be obtained at various specimen surface temperatures. Constant electrical gain of the amplification system was obtained by means of calibrating with an electrical signal from a constant output oscillator introduced into the radiation detector in series with the photo cell.

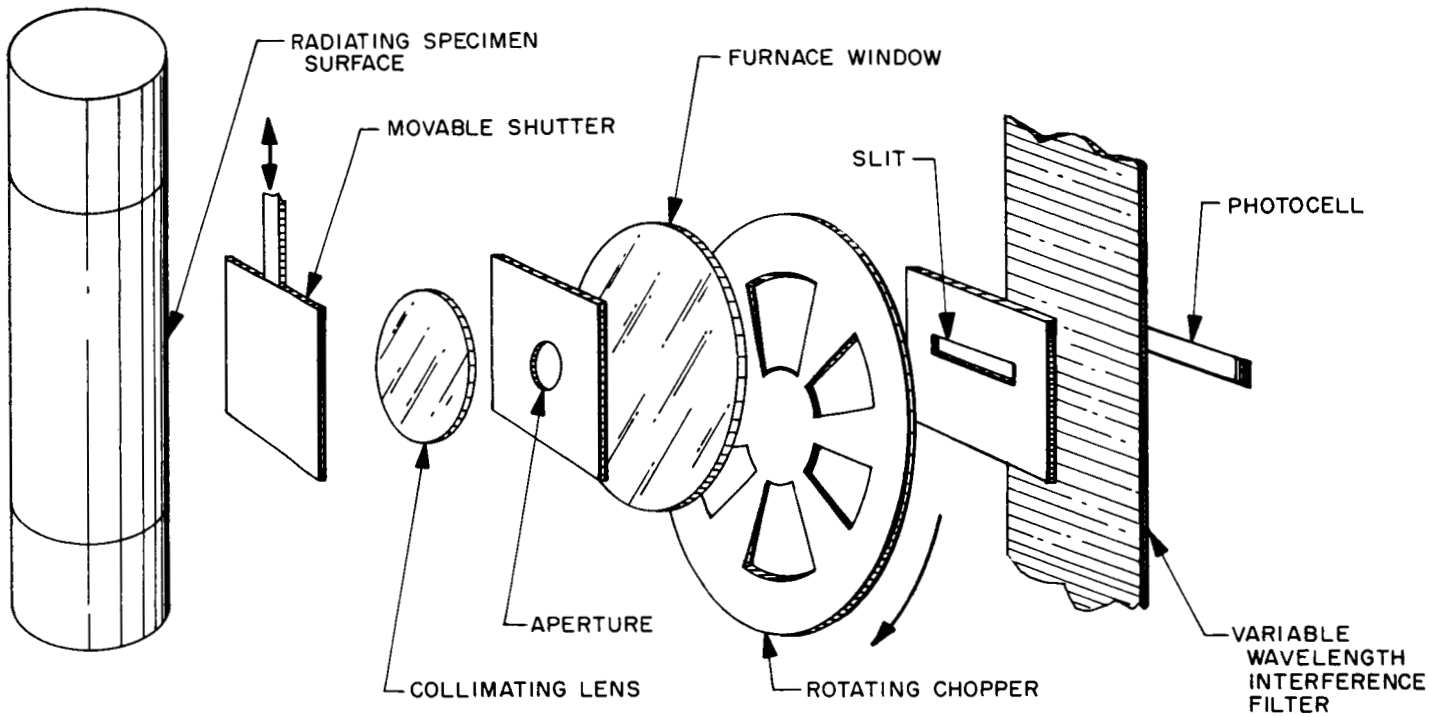


**Fig. 2. Schematic view of radiation detector head**

## III. THERMAL CONDUCTIVITY SPECIMEN

Suitable specimens for use in this apparatus may be prepared by various techniques, depending on the particular material under evaluation. Most of the specimen blanks were prepared by hot pressing. Specimens of the necessary final configuration may be prepared by this technique (see Fig. 3). The entire test specimen was normally prepared in three approximately equal-sized pieces.

The lower shield contained no sight holes, the test section contained 1/16-in.-dia holes half way through, while the upper shield portion contained 1/8-in.-dia sight holes all of the way through the specimen. The mating ends of the specimen were surface ground to insure good contact. The location of the sight holes within the specimen was precisely determined by means of sonic depth measurement techniques.

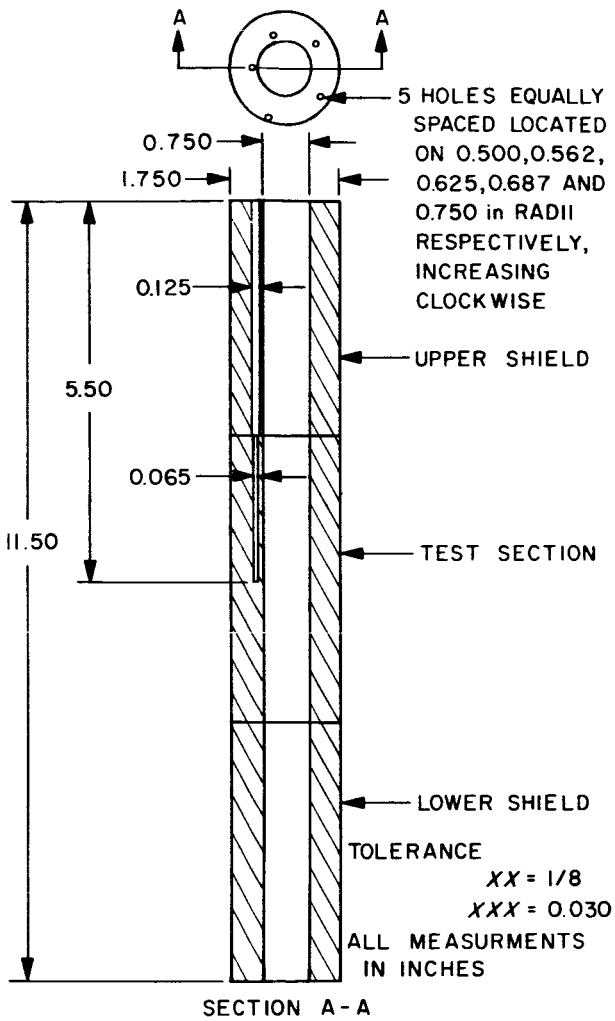


**Fig. 3. Configuration of thermal conductivity specimen**

## IV. OPERATING PROCEDURE

The test specimen was loaded into the furnace and aligned with the sight holes before heating of the furnace was begun. This was normally performed the day before the determinations in order to permit the use of slow heating rates. By means of the timer and automatic heat rate controller, the specimen was brought to the desired test temperature overnight and held until thermal equilibrium was reached. The time normally required to attain equilibrium was approximately one hour after reaching desired test temperature. The temperature at each of the five sight holes was then recorded, and voltage and current input to the heater was determined. In some cases, portions of the sight holes were occluded, in which case the run was aborted. Finally, the electrical output of the radiation detector at each of the preselected wave lengths was determined. The recording of this complete set of data normally required 10 to 15 min. During this time the temperature change was not more than 4°C.

The automatic heat-rate controller was then used to bring the apparatus to a new temperature, and the procedure was repeated until the desired maximum was attained, or some failure occurred. Failure most frequently took the form of heater tube destruction.

At the conclusion of a set of determinations, the automatic heat-rate controller was used to slowly bring the specimen back to room temperature. The specimen was removed and examined for any cracks or other peculiarities which might have influenced the results.

## V. DATA REDUCTION

The thermal conductivity data obtained from this apparatus were manually recorded in the form of voltage and current, with temperature readings at each of the five sight holes. The thermal conductivity was then calculated according to the formula:

$$k = \frac{VI}{2\pi L}\left(\frac{\Delta T}{\Delta \ln R}\right)^{-1}$$

where

$R$ = radial distance of sight hole from centerline of specimen

$V$ = voltage

$I$ = current

$L$ = length of test zone

$\frac{\Delta T}{\Delta \ln R}$ = temperature $T$ at distance $R$ from the center of the cylinder

The quantity $\Delta T/\Delta \ln R$ was determined by means of a least-squares analysis of the temperature vs $\ln R$ data, using a digital computer. The temperature corresponding to this particular value of thermal conductivity was arbitrarily taken to be that of hole 3, which was located approximately in the center of the wall of the specimen. This temperature was then corrected for window and prism optical absorption as determined in the following section.

In addition to thermal conductivity, the quantity of heat being conducted through the specimen and the deviation of the measured temperatures from the least-squares line were determined. Finally, by extrapolating the least-squares line to the value of $\ln R$ corresponding to the surface of the specimen, a true surface temperature was determined.

The radiation transfer data were recorded manually in the form of relative electrical output for selected wavelengths concurrent with thermal conductivity determination. The wavelength intervals selected were 0.05-$\mu$ increments between 0.4 and 0.8 $\mu$, and 0.2-$\mu$ increments between 0.8 and 2.0 $\mu$. The magnitude of the electrical signal was then compared to that determined for a blackbody at the corresponding temperature. The ratio of these values was taken as a spectral emittance value for that particular wavelength and temperature.

## VI. CALIBRATION AND EVALUATION

The pyrometer used for temperature measurement was calibrated periodically against a National Bureau of Standards strip lamp. All prisms and windows in the optical path were calibrated for optical absorption.

An error analysis was conducted on the equipment, and based on the equation:

$$\sigma_U^2 = \left(\frac{\partial U}{\partial A}\right)^2 \sigma_A^2 + \left(\frac{\partial U}{\partial B}\right)^2 \sigma_B^2 + \cdots \text{(Ref. 10)}$$

where

$U = f(A, B, \cdots)$ and $\sigma$ is the standard deviation

This analysis indicated the accurate determination of the temperature gradient to be the limiting factor to the pre-

cision of the technique. The magnitude of the gradient in these determinations ranged from 20°C at the low temperatures to approximately 150°C at the maximum temperatures employed. The absolute accuracy of any temperature within the range of investigation was approximately ±10°C; however, the error in the gradient determination was not so great. The sensitivity of the temperature measurement was approximately ±2°C. This is the precision within which the same operator could reproduce a reading under the same conditions. This precision, therefore, would be the limiting factor for the determination of the temperature gradient. The absolute accuracy of the temperature measurement would determine the accuracy of the temperature for which a given thermal conductivity value is reported.

Based on the aforementioned limits of precision, error analyses of the thermal conductivity results show the results at low temperatures to be precise to ±10%, and at high temperatures, to about ±5%.

To assure that the electrical instruments used to measure the power input were operating within their specified frequency ranges and that the power input was equal to the product of the voltage and amperage (power factor = 1.0), a harmonic analysis was conducted on the system, and the power factor of the various harmonics was determined. It was found that at temperatures below 1200°C, it would be necessary to derate the accuracy of the ammeter to approximately 1% because of a significant quantity of harmonics above the rated frequencies for this meter. At higher temperatures no derating is necessary. Further, by measurement of the phase relationship of each harmonic existing in the waveform, it was found that the power factor at all temperatures was at least 0.997, and therefore, no correction was necessary. It was concluded that the true power produced in the test zone of the specimen was accurately represented by the product of indicated volts times amps within 2%. This included reading errors and less than full-scale deflection of the meters.

For the purpose of calibrating the response of the various optical and electrical components in the radiant energy detector, a black-body specimen was employed. It consisted of a graphite specimen and a black-body cavity, into which the radiant energy detector was focussed. Normal thermal conductivity data reduction techniques were employed, with the exception that the temperature of the emitting body was taken as the interior of the black-body hole rather than that of the specimen surface. This was because the black-body hole extended into the specimen for a definite distance. In graphite, this was approximately 20°C higher than the surface.

It should be noted that this calibration of the sensitivity of the radiant energy detector for any particular run is not based on calibration with the specimen while in place, but rather on a different specimen during a different run. To provide an additional calibration of the particular specimen being evaluated, an 0.040-in.-dia black-body hole, 0.08 in. deep, was drilled into selected specimens diametrically opposite the point viewed by the radiant energy detector. By means of an optical pyrometer measurements were made of the surface brightness temperature of this specimen and the apparent black-body-hole temperature. This black-body-hole temperature was then corrected for the temperature gradient existing within the specimen assuming that the mean indicated temperature was that of the mean temperature of the hole. Values of the spectral emittance at 0.65 $\mu$ were then calculated from the surface brightness temperature, and the true temperature of the surface obtained from extrapolation of the thermal conductivity data and also from the surface brightness temperature and the corrected black-body-hole temperature. These values were then compared with the emissivity at 0.65 $\mu$ as determined from the radiation detection head.

At this point, it is necessary to determine whether or not a source of inherent error might have existed which could have influenced the results for thermal conductivity. The primary source of such errors would be heat losses from the test zone. Since the specimen was made of several pieces, the effect of this multiple-part construction was evaluated. Results indicated that with a coarse-grained, approximately 80% dense MgO body, significant errors were introduced when sections existed within the test zone. Thermal conductivities under these conditions were approximately 50% higher than those in which the sections existed only outside of the test zone. Consequently, in all tests it was necessary to maintain one-piece construction for 1 in. or more around the test zone. In actual practice, the test zone was located in the center of a 3-in. test piece.

To determine that the heat flow in the test zone was radial (without a substantial longitudinal component), a temperature profile was run on the heater with specimen and shields in place. The temperature variation within the test zone was ±5°C at 1000°C, and ±25°C at 1700°C. The variations cause a nonradial component of heat flow of approximately 2% of the total.

There also existed a possibility of a loss in heat from the specimen test zone resulting from convection currents flowing up through the ⅛-in. angular space surrounding the heater tube. To preclude this possibility, a tightly fitted sleeve was placed inside the specimen. This sleeve extended from the specimen to the furnace body, and was fitted such that no more than one thousandth of an inch of clearance existed at temperature of evaluation. Results were the same for tests conducted with and without this shield. Consequently, it was concluded that convection did not result in a significant loss of thermal energy from the test zone.

## ACKNOWLEDGMENT

The author wishes to thank Mr. Robert D. Allen for the preliminary design and Mr. Bobby L. Burch for his care and assistance in setting up this facility.

## REFERENCES

1. Kingery, W. D., and McQuarrie, M., "Thermal Conductivity: I, Concepts of Measurement and Factors Affecting Thermal Conductivity of Ceramic Materials," *Journal of American Ceramic Society*, Vol. 37, pp. 67–72, 1954.
2. Peierls, R. E., *Ann. Physik*, Vol. 3, p. 1055, 1929.
3. Eshelby, J. D., "Fundamental Physics of Heat Conduction," *Proc. General Discussion of Heat Transfer*, Institute of Mechanical Engineers (London) p. 267, 1951.
4. Klemens, P. G., "Thermal Conductivity and Lattice Vibrational Modes," in *Solid State Physics*, Vol. 7, Academic Press Inc., New York, pp. 1–98, 1958.
5. McQuarrie, M., "Thermal Conductivity: VII, Analysis of Variation of Conductivity with Temperature for $Al_2O_3$, BeO, and MgO," *Journal of American Ceramic Society*, Vol. 37, pp. 91–94, 1954.
6. Kingery, W. D., "Thermal Conductivity: XII, Temperature Dependence of Conductivity for Single Phase Ceramics," *Journal of American Ceramic Society*, Vol. 38, pp. 251–255, 1955.
7. Lee, D. W., and Kingery, W. D., "Radiation Energy Transfer and Thermal Conductivity of Ceramic Oxides," *Journal of American Ceramic Society*, Vol. 43, pp. 594–607,1960.
8. Laubitz, M. J., "On Measurement of Thermal Conductivity at High Temperatures," *Canadian Journal of Physics*, Vol. 39, pp. 1029–1039, 1961.
9. Seybolt, A. V., and Burke, J. E., *Procedures in Experimental Metallurgy*, John Wiley and Sons, p. 113, 1953.
10. Hetenyi, M., *Handbook of Experimental Stress Analysis*, John Wiley and Sons, p. 1055, 1950.