175 P

N64-29505
(ACCESSION NUMBER) (THRU)
175 1
(PAGES) (CODE)
CR-58698 08
(NASA CR OR TMX OR AD NUMBER) (CATEGORY)
FACILITY FORM 602

FINAL REPORT FOR

AIRBORNE RANGE AND ORBIT

DETERMINATION SYSTEM

4126-6002-RU-000

29 JANUARY 1964

VOLUME I

VEHICLE MASTER OSCILLATOR AND FREQUENCY SYNTHESIZER

Prepared for

NATIONAL AERONAUTICS AND SPACE ADMINISTRATION
GEORGE C. MARSHALL SPACE FLIGHT CENTER
Huntsville, Alabama

CONTRACT NAS8-5482

OTS PRICE
XEROX $ 12.25
MICROFILM $

TRW SPACE TECHNOLOGY LABORATORIES
THOMPSON RAMO WOOLDRIDGE INC.

TRW/Space Technology Laboratories was contracted by the George C. Marshall Space Flight Center to provide A Portion of the Airborne Range and Orbit Determination System.

This final report documents and summarizes the results of the entire contract work performed during the development, fabrication, assembly and test of the Vehicle Master Oscillator and Frequency Synthesizer (Volume I) and the Vehicle Tracking Transmitter (Volume II). The report is divided into two volumes to facilitate its use as a working document and to permit the issuance of the pertinent data as soon as possible after the delivery of each unit.

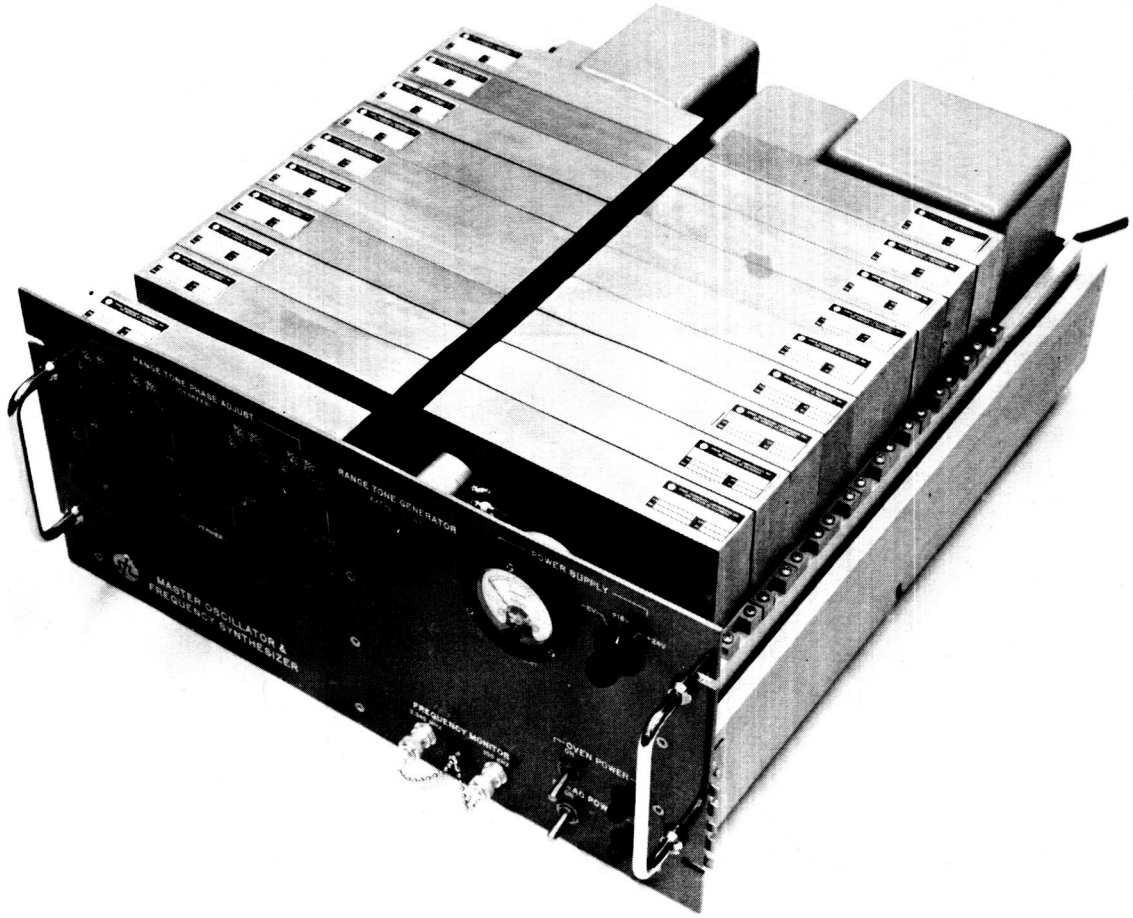

Figure 1. Master Oscillator and Frequency Synthesizer

1. VEHICLE MASTER OSCILLATOR AND FREQUENCY SYNTHESIZER

1.1 Function of Equipment

5

The Vehicle Master Oscillator and Frequency Synthesizer (MOFS) is the source of all signal frequencies required in the vehicleborne portion of the AROD system. It is an all solid-state unit consisting of a highly stable Master Oscillator and appropriate coherent frequency synthesizing circuitry to derive the specified frequencies. The MOFS provides five signal frequency outputs to the Vehicle Tracking Transmitter, eight to the Vehicle Tracking Receiver, five to the Range Data Extraction equipment, two to the Frequency Monitor, and one each to the Vehicle Command Transmitter and Timing Unit. In addition to its generation function, the frequency synthesizing portion of the equipment will accept four range tones from the Range Data Extraction equipment for subsequent frequency translation preparatory to modulating the Vehicle Tracking Transmitter.

Figure 1 is a view of the MOFS chassis as seen from the front.

1.2 Description of Equipment

The Master Oscillator is the prime frequency source for the frequency synthesizer and all output frequencies are coherently derived from it. Hence, they possess excellent frequency stability, minimizing receiver acquisition problems and doppler and timing errors. The Master Oscillator operates at a frequency of 2.3420000 MHz with a frequency accuracy of better than 1 part in 10^7 due to temperature,* and 1 part in 10^9 per day due to aging. The short term stability was not measured but comparison with other oscillators possessing similar characteristics indicates a short term stability of 1 part in 10^{11}.

The frequency synthesizer performs a sensitive and critical function when used in conjunction with a phase lock receiver. As such a receiver has a low threshold sensitivity due to its narrowband character, the spectral purity of the synthesizer outputs must be high to prevent spurious

*The Master Oscillator in the first deliverable Master Oscillator and Frequency Synthesizer had an accuracy of 0.20 parts in 10^7 over the temperature range of $-10^{\circ}C$ to $+75^{\circ}C$. The long term frequency drift was better than 1 part in 10^9.

Table of Contents

	Page
1. VEHICLE MASTER OSCILLATOR AND FREQUENCY SYNTHESIZER	1
1.1 Function of Equipment	1
1.2 Description of Equipment	1
1.3 Theory of Operation	9
1.3.1 Block Diagram Analysis	9
1.3.2 Circuit Analysis	14
1.3.3 Power Distribution	38
1.3.4 Temperature Control	39
1.4 Special Tools and Test Equipment	39
1.5 Maintenance	39
1.5.1 Maintenance Precautions	39
1.5.2 Alignment Procedures	40
1.6 Drawings	50
1.6.1 Circuit Schematics	50
1.6.2 Module Assembly	51

Illustrations

Figure		Page
1	Master Oscillator and Frequency Synthesizer	2
2	Typical Modules in the MOFS	8
3	Block Diagram Master Oscillator and Frequency Synthesizer	10
4	Master Oscillator Block Diagram	14
5	Master Oscillator Simplified Schematic	15
6	Buffer Amplifier Simplified Schematic	16
7	Modules Nos. A-11500-1, -2; A-11305-1; A-11306-5 2.34 MHz Amplifiers and Power Dividers	18
8	Simplified Schematic of the Power Dividers	19
9	Block Diagram of a Typical Multiplier or Mixer Arrangement	19
10	Simplified Electrical Schematic of a Typical Multiplier	20
11	A Simplified Electrical Schematic of a Typical Mixer	21
12	Representative Filter Amplifier	22
13	Simplified Electrical Schematic of a Typical Divider	23
14	Block Diagram of a Typical Divider Arrangement	23
15	Block Diagram of the Cascaded Binary Stages	24
16	Typical Schematic of Flip-Flop	25
17	Block Diagram of a Low Frequency Mixer	26
18	Diode Balanced Modulator	26
19	Filter Amplifier	27
20	2.3 MHz Phase Shifter	28
21	Module No. A-11502-5 20 KHz Phase Detector and DC Amplifier	30
22	Phase Detector Schematic	31
23	VCO Schematic	31
24	Doubler and Power Amplifier	35
25	Quadrupler Schematic	36
26	A11900 Tuning Adjustments	49

Final Report for

Airborne Range and Orbit

Determination System

4126-6002-RU-000 29 January 1964

Volume I

Master Oscillator and Frequency Synthesizer

Approved J. E. Holland

J. E. Holland, Manager
AROD Project

or false lock. Hence, the employment of careful filtering methods in the synthesizer is mandatory to ensure adequate suppression of the extraneous outputs. Secondly, when employing CW ranging techniques extreme care must be exercised to avoid inducing phase fluctuations attributable to temperature or aging effects. Hence, temperature stabilization is needed in the range tone generation circuitry to minimize this type of error.

7

The synthesizer provides 22 outputs, distributed as follows, to various sections of the vehicleborne portion of the AROD system:

<u>Vehicle Tracking Transmitter</u>

(a)	Power	
	(Ranging Tones)	10 dbm +1 db -1.25 db
	(Transmitter Carrier)	10 dbm ±1 db
(b)	Impedance	50 ohms
(c)	Frequency	
	(Ranging Tones)	2.342000 MHz 2.340892 MHz 2.340820 MHz 2.268812 MHz
	(Transmitter Carrier)	71.13825 MHz
(d)	Connector	Type TNC
(e)	Number of Connectors	5

<u>Vehicle Tracking Receiver</u>

(a)	Power	
	2114.826 MHz	4.25 dbm ±1.0 db
	140.5200 MHz	10 dbm +1.25 db -1.0 db
	All Others	10 dbm ±1.0 db
(b)	Impedance	50 ohms
(c)	Frequency	2114.83 MHz 12.646800 MHz 14.052000 MHz 19.438600 MHz 20.843800 MHz 70.260000 MHz 140.520000 MHz 4.684000 MHz
(d)	Connector	
	2114.826 MHz	Type N
	All Others	Type TNC
(e)	Number of Connectors	8

Range Data Extraction Equipment

(a)	Power	10 dbm ±1.0 db
(b)	Impedance	50 ohms
(c)	Frequency	2.342000 MHz 73.1875 KHz 2.2871 KHz 71.47 Hz 4.684000 MHz
(d)	Connector	Type TNC
(e)	Number of Connectors	5

Vehicle Command Transmitter

(a)	Power	10 dbm ±1.0 db
(b)	Impedance	50 ohms
(c)	Frequency	68.997516 MHz
(d)	Connector	Type TNC
(e)	Number of Connectors	1

Timing Unit

(a)	Power	10 dbm ±1.0 db
(b)	Impedance	50 ohms
(c)	Frequency	200 KHz
(d)	Connector	Type TNC
(e)	Number of Connectors	1

Frequency Monitor

(a)	Power	
	100 KHz	13 dbm +1 db -1.5 db
	2.342 MHz	13 dbm ±1 db
(b)	Impedance	50 ohms
(c)	Frequency	100 KHz 2.342 MHz
(d)	Connector	Type BNC with cap
(e)	Number of Connectors	2

The synthesizer will accept ranging tones with the following characteristics from the Range Data Extraction Equipment:

(a)	Power	10 dbm ±1.0 db
(b)	Impedance	50 ohms
(c)	Frequency	2.342000 MHz 73.1875 KHz 2.2871 KHz 71.47 Hz
(d)	Connector	Type TNC
(e)	Number of connectors	4

9

In addition to the above signal outputs there are five Test and Monitoring Points (TMP's) built into the equipment which provide DC voltages to indicate the presence or absence of the Master Oscillator signal and the four range tones. The TMP's voltages are available at the rear of the chassis via a Bendix Pygmy connector. Test points are indicated for monitoring the following signals:

(a) Master Oscillator outputs
(b) Frequency Synthesizer outputs
(c) Frequency Determination Module outputs
(d) Timing Synthesizer outputs
(e) X32 Multiplier output
(f) Power supply voltages to each module.

The MOFS circuitry is operated from three power supplies providing regulated outputs at +18 volts DC, -6 volts DC, and +24 volts DC when connected to a 115 volt AC, 60 cps input. Each module is decoupled from the power supply to prevent mutual coupling through common power supply impedances. The nominal currents drawn from the power supplies are as follows:

+24 V - 50 ma
+18 V - 600 ma
-6 V - 400 ma.

The total power dissipated in the MOFS is nominally 70 volt-amperes.

Panel controls and indicator lights are provided for the following functions:

(a) AC Power - Toggle switch to turn the unit ON and OFF and a pilot lamp indicating when power is ON.

(b) Oven Power - Toggle switch to turn the Master Oscillator oven power ON and OFF and a pilot lamp to indicate when the oven power is ON.

(c) Power Supply Current - A three position rotary switch and associated meter to measure the current drain on each of the three supplies.

(d) Range Tone Selector - Two position rotary switch to select either internally generated or externally generated range tones.

(e) Range Tone Phase Adjustor - A group of four rotary switches and vernier controls to adjust the range tone phase through 360°.

(f) Frequency Monitor - Two pilot lamps to indicate the presence of the Master Oscillator and 100 KHz outputs to the Frequency Monitor.

The MOFS is designed to be mounted in a standard 19-inch relay rack. Its overall dimensions measured behind the panel are 17 inches wide by 8-1/8 inches high by 20 inches deep. An additional 2-5/8 inches is needed in the front for the panel, handles and panel hardware. The MOFS consists of 22 modules of circuitry, three power supplies and the Master Oscillator with its oven. Twenty of the modules, located on the top of the chassis, are identical in physical dimensions and possess common mounting provisions. The other two are mounted on the underside of the main frame. The former modules have five separate compartments to isolate individual circuits from each other. Also, each module has cover plates to shield the circuitry in one module from the adjacent ones.

The modules can be unbolted and lifted out for servicing without removing any of the power or signal wiring. Photographs of typical modules appear in Figure 2.

The unit weighs 95 pounds and is mounted on chassis slides for ease of maintenance.

A complete listing of the modules is given in the following tabulation:

Unit Number	Title
A-11200	Oscillator Assy., Vehicle Master
A-11300	Module Assy., Main Frequency Synthesizer, No. 1
A-11301	Module Assy., Main Frequency Synthesizer, No. 2
A-11302	Module Assy., Main Frequency Synthesizer, No. 3
A-11303	Module Assy., Main Frequency Synthesizer, No. 4
A-11304	Module Assy., Main Frequency Synthesizer, No. 5
A-11305	Module Assy., Main Frequency Synthesizer, No. 6
A-11306	Module Assy., Main Frequency Synthesizer, No. 7
A-11307	Module Assy., Main Frequency Synthesizer, No. 8
A-11400	Module Assy., Main Frequency Synthesizer, No. 9
A-11401	Module Assy., Main Frequency Synthesizer, No. 10
A-11500	Module Assy., Time Synthesizer, No. 1
A-11501	Module Assy., Time Synthesizer, No. 2
A-11502	Module Assy., Time Synthesizer, No. 3
A-11600	Module Assy., Frequency Determination, No. 1-A
A-11601	Module Assy., Frequency Determination, No. 1-B
A-11700	Module Assy., Frequency Determination, No. 2-A
A-11701	Module Assy., Frequency Determination, No. 2-B
A-11800	Module Assy., Frequency Determination, No. 3-A
A-11801	Module Assy., Frequency Determination, No. 3-B
A-11900	Module Assy., X32 Multiplier
	Power Supply, +24 v d-c, Technipower S-23.3-0.75A-P
	Power Supply, +18 v d-c, Technipower S-17.5-1.5A-P
	Power Supply, -6 v d-c, Technipower S-6.0-1.5A-P

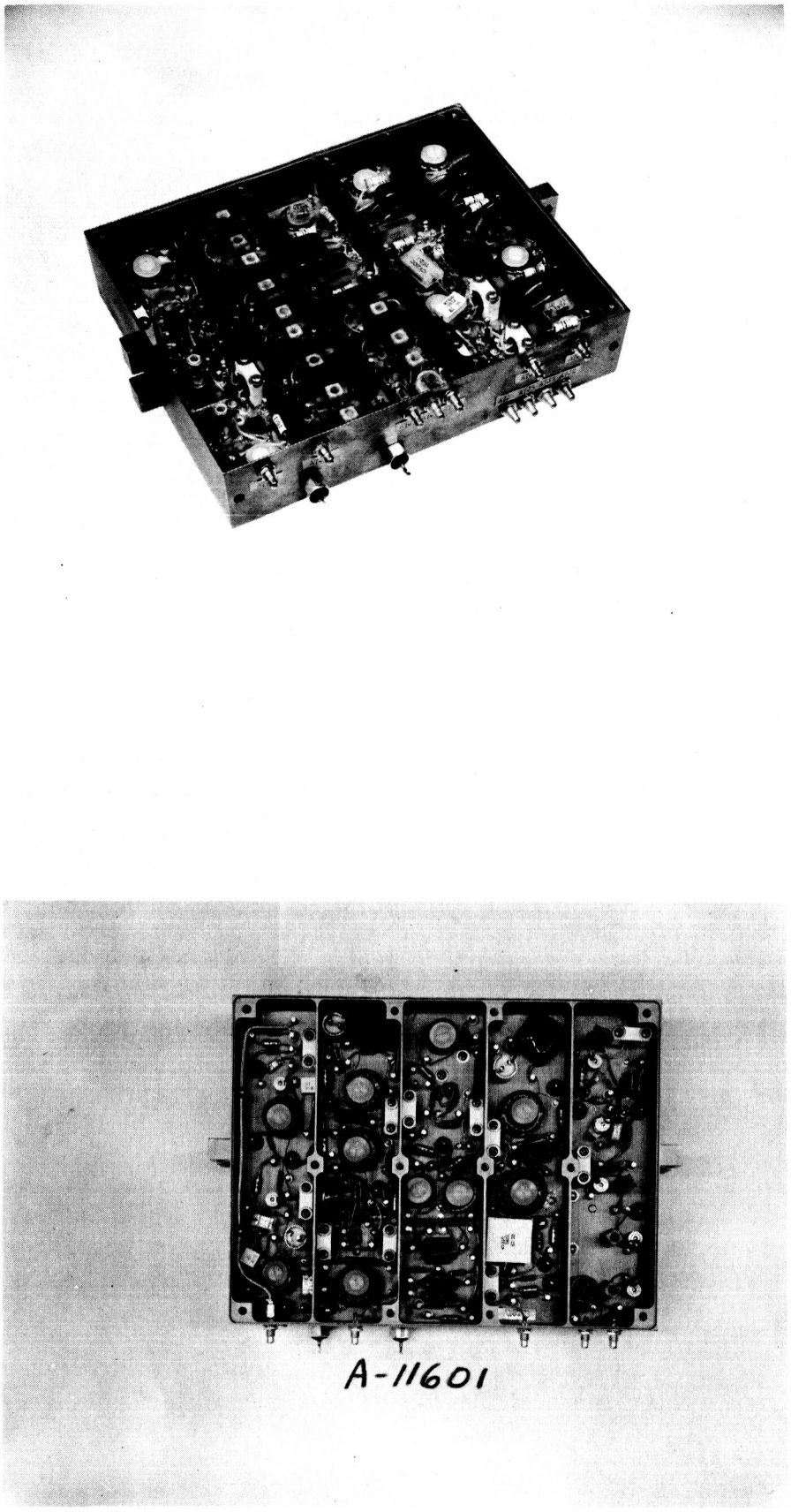

Figure 2. Typical Modules in the MOFS

1.3 Theory of Operation

The Master Oscillator and Frequency Synthesizer provides a number of signal frequencies for use throughout the vehicleborne portion of the AROD system. This is accomplished by synthesizing all of the output frequencies from a very stable Master Oscillator.

1.3.1 Block Diagram Analysis

A block diagram of the Master Oscillator and Frequency Synthesizer is shown in Figure 3. It is partitioned by broken lines into areas which correspond to the circuitry contained in the various enumerated modules. Output signals with their respective power levels are shown near the associated output connector. Test Points are indicated by AXTPX and Test and Monitoring Points by J27-X(TMP). Some internal signal paths have been shown with letters at each end in order to eliminate confusing lines.

The Master Oscillator, operating at 2.342 MHz, is located in the upper left corner of the block diagram in Module A11200. It possesses a long term stability better than 1 part in 10^7 due to temperature and 1 part in 10^9 per day due to aging after a suitable warmup period. Any spurious outputs from the oscillator are suppressed greater than 60 db below the rated output. A buffer amplifier is used following the oscillator to minimize the effects of load variation on frequency stability and ensure good isolation between the oscillator and its load. The amplifiers and power dividers distributing the 2.342 MHz oscillator signal to the various output ports and internal circuits are fed by a driver amplifier.

The signal from the power distribution network used to synthesize the untranslated ranging tones is fed to Module A11301 where it is divided down to successively lower frequencies, with the first division being a division by 4 to obtain a 0.5855 MHz signal for subsequent use by the Frequency Determination Modules. The latter signal frequency is then divided by 8 to get 73.1875 MHz for internal use and

as an output to the Range Data Extraction Equipment. The 73.1875 KHz is subsequently divided by 4 for use in the Frequency Determination Modules as well as being sent to Module A11400 where it is further divided by 8, giving 2.28711 KHz. This signal is employed internally as well as being sent to the Range Data Extraction Equipment. Lastly, the 2.28711 KHz signal is divided by 32 to obtain 71.47 Hz for use by the Range Data Extraction Equipment and within the synthesizer.

15 Module A11307, down in the middle of the block diagram, contains a chain of multipliers. The input signal at 2.342 MHz is doubled to supply 4.684 MHz to the Vehicle Tracking Receiver and the Range Data Extraction Equipment as well as for subsequent use internally. This signal is next tripled to realize 14.052 MHz for use within the synthesizer and Vehicle Tracking Receiver. The 14.052 MHz is multiplied by 5 to supply 70.26 MHz to the Vehicle Tracking Receiver. Further multiplication by 2 yields the 140.52 MHz also needed by the Vehicle Tracking Receiver. Each signal is individually filtered and the power distributed in circuitry designed to minimize cross coupling between circuits receiving a common frequency.

To the lower left, in Module A11306, the 2.342 MHz is multiplied by 25 in two stages of quintuplers to obtain 58.55 MHz for use by the Frequency Determination Modules.

At the middle left, in Module A11305, the 2.342 MHz is divided by 5 and the resultant multiplied by 3 to obtain a frequency of 1.4052 MHz. The 1.4052 MHz is then divided by 2 and the 702.6 KHz signal is used as one input to a mixer. The other input to the mixer is the 4.684 MHz signal from the multiplier chain in Module A11307. The sum output from this mixer is employed as an input to a second mixer in Module A11306 which has as its other input, the 14.052 MHz from the multiplier chain in Module A11307. The sum output of the latter mixer becomes the 19.4386 MHz signal for the Vehicle Tracking Receiver. It is further mixed with the 1.4052 MHz signal in Module A11306 to yield the 20.8438 MHz output to the Vehicle Tracking Receiver. The 1.4052 MHz signal

from Module A11305 is also mixed with the 14.052 MHz from the multiplier chain in Module A11307 and the difference frequency becomes the 12.6468 MHz supplied to the Vehicle Tracking Receiver.

At the lower center of the block diagram are four inputs from the Range Data Extraction Equipment and a switch to select either these or their equivalents generated within the synthesizer. The modulating frequencies sent to the Vehicle Tracking Transmitter are synthesized from these four frequencies in the following manner. First the 71.47217 Hz and the 2.28711 KHz signals are mixed in Module A11401. The sum and difference frequencies are separated and divided by 2 yielding two frequencies near 1 KHz and separated by 71.47 Hz. Each of these signals is mixed with the 73.1875 KHz in Module A11302 and the difference frequencies sent to a mixer in Module A11303. Here they are mixed with the 2.342 MHz signal and the sum frequencies are sent to the following mixer where they are again mixed with the 73.1875 KHz providing the desired outputs at 2.34082 MHz and 2.34089 MHz. These signals, after being phase corrected by the phase shifters $\Delta\phi_3$ and $\Delta\phi_2$, are sent to the Vehicle Tracking Transmitter. The 2.342 MHz and the 73.1875 KHz are mixed in Module A11303 and the difference frequency, 2.2688 MHz, after passing through the phase shifter, $\Delta\phi_4$, is then sent to the Tracking Transmitter. After phase adjustment in $\Delta\phi_1$, the 2.342 MHz signal is sent to the phase modulator in the Vehicle Tracking Transmitter.

The 100 KHz and 200 KHz signals are synthesized in Modules A11500, A11501, A11502 and A11503. The 2.342 MHz is fed to a mixer with 2 MHz as the other input in Module A11500. The 0.342 MHz difference frequency is fed to a second mixer which has a second input at 300 KHz. The difference frequency is sent to a third mixer which has a 40 KHz signal as a second input. The difference frequency, 2 KHz, is multiplied by 5 to get 10 KHz which is in turn multiplied by 2 to obtain a 20 KHz signal. This is fed to a phase detector whose output is filtered, amplified and used to control the frequency of a 100 KHz voltage controlled

oscillator. The output of this oscillator, after division by 5, is used as the second input to its controlling phase detector. This signal is also multiplied by 2 and used as the second input at 40 KHz, to the last mixer. The 100 KHz output is also sent to the Frequency Monitor, a tripler and a doubler. The output of the tripler is used as an input to the second mixer in Module A11501 and the doubler provides the 200 KHz output signal to the Timing Unit. The 200 KHz signal is further multiplied by 5 and then by 2 to obtain a 2 MHz signal for the second input to the first mixer in Module A11500. Acquisition of the phase lock loop is accomplished by a sweep circuit which drives the integrator between two voltage limits. The resulting frequency variation of the VCO is sufficient to accommodate uncertainties in the VCO frequency and drift in the integrator.

To the right of the block diagram are three phase lock oscillator loops and a multiplier chain providing two transmitter signals and a receiver local oscillator signal. Each of the three oscillator loops have the same input frequencies, 18.2969 KHz, 73.1875 KHz, 0.5855 MHz, 2.342 MHz and 58.55 MHz. In the first VCO loop, contained in Modules A11600 and A11601, the 2.342 MHz is multiplied by 4 to obtain 9.368 MHz for a mixer input. The 73.1875 KHz is multiplied by 6 to provide 0.439135 MHz for another mixer input and lastly the 18.2969 KHz signal is multiplied by 3 to obtain 54.8906 KHz, a phase reference for the phase detector. The 58.55 MHz input and the VCO output are mixed and the difference frequency of 10.4475 MHz is impressed on the following mixer. Here it is differenced with 9.368 MHz to obtain 1.0795 MHz. The latter signal is mixed with the 0.5855 MHz input to produce 0.4940 MHz. The latter signal is differenced with 0.4391 MHz in the last mixer to obtain a second input for the phase detector. The phase detector output is filtered, amplified and used to control the frequency of the VCO. The VCO output, 68.9975 MHz, is supplied to the Vehicle Command Transmitter.

The other two loops operate in a similar fashion with the synthesizer inputs used to mix the VCO frequency down to a suitable

reference frequency. The phase of the signal derived from the oscillator is compared to the reference and the error used to correct the oscillator frequency. The middle loop is used to generate a 71.1383 MHz signal for the Vehicle Tracking Transmitter. The lower Frequency Determination unit is employed to drive a series of multipliers to provide the receiver first local oscillator signal in the following manner. The oscillator frequency, 66.0883 MHz is multiplied by 2 and amplified to drive passive varactor multipliers which multiply it by 16 in two quadrupler stages to reach a signal frequency of 2114.826 MHz which serves as the local oscillator signal in the Vehicle Tracking Receiver.

The block diagram is completed with the three power supplies and their associated current meters.

1.3.2 Circuit Analysis

The circuitry used in the MOFS is all solid-state and, to the maximum extent possible, devices performing a particular function such as mixing, amplifying, and filtering are of a common type to minimize the variety of components needed. The following section discusses circuit design details using simplified schematics and block diagrams. Complete schematics and layouts of the modules are included in Section 1.6.

1.3.2.1 Master Oscillator

The Master Oscillator consists of an oscillator stage, a buffer stage, an amplifier, and a bandpass filter. A block diagram of this subassembly is shown below in Figure 4.

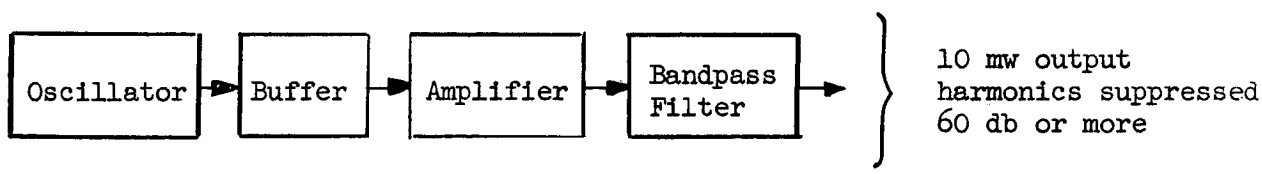

Figure 4. Master Oscillator Block Diagram

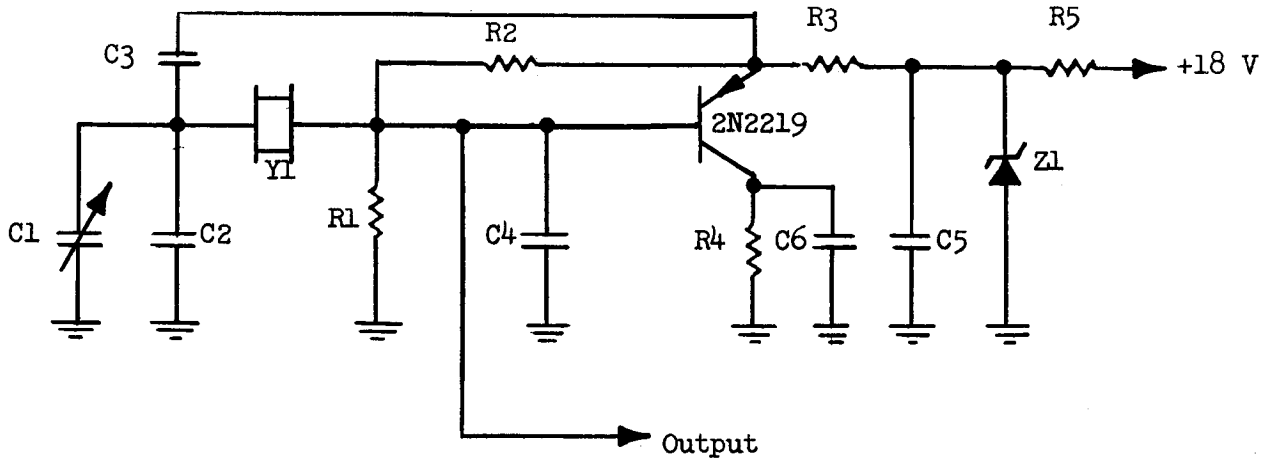

Figure 5. Master Oscillator Simplified Schematic

Figure 5 illustrates the schematic of the oscillator. It is a feedback type modified Pierce oscillator with the crystal operating in the series resonant mode. The feedback loop is from the transistor collector to base. The output from the oscillator itself is taken from a low impedance point in the loop to minimize frequency fluctuations due to load variations. Circuit Q is maximized by using just sufficient drive to make the circuit sustain oscillations. The C_o and C_i of the transistor are swamped by the feedback loop capacity. Low impedances in parallel with the base and collector of the transistor reduce the effects of any changes in input or collector impedances, thus minimizing phase shift caused by the amplifier. To ensure good isolation between

the oscillator and its load, a high input impedance buffer stage is employed which lightly loads the oscillator, improving its frequency stability. The buffer amplifier consists of an emitter follower stage with an input impedance of about 30 K ohms and an output impedance of about 400 ohms. A simplified schematic of the buffer amplifier is shown below in Figure 6.

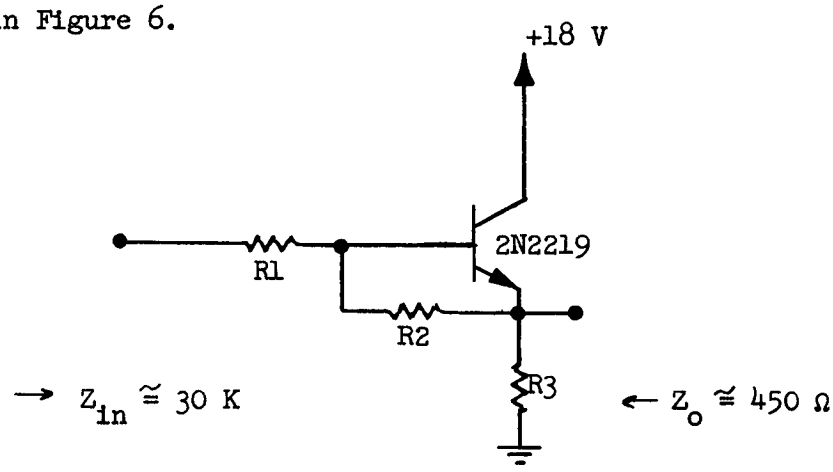

Figure 6. Buffer Amplifier Simplified Schematic

The calculated current stability of this circuit is about four. The buffer stage is located in the oven with the oscillator circuitry to stabilize the oscillator load and minimize frequency drift. The oscillator and buffer amplifier power dissipation is kept to a minimum (approximately 35 mw) to minimize oven control requirements. The supply voltage is regulated with a low temperature coefficient reference diode. Following the buffer is a driver amplifier consisting of a two stage grounded-emitter, tuned amplifier providing an output of 10 mw to the following power divider circuitry.

The required attenuation of all spurious signals at the Master Oscillator output is at least 60 db below the fundamental. Since the harmonics from the Master Oscillator itself are only about 30 db below the fundamental a series tuned filter is installed at the output of the amplifier to suppress the second and all higher order harmonics at least 60 db below the fundamental.

1.3.2.2 Power Divider

The amplifier-power divider circuits are contained in portions of three modules. The circuits are designed to provide the required power outputs with sufficient isolation between both the input and other outputs. A total of 11 outputs at various power levels are derived from one 2.342 MHz - 10 mw input.

The input signal power for the divider circuits is obtained from the Master Oscillator driver amplifier. An emitter follower is used at the input in Module A11500-2 to provide isolation between the input and the output amplifier stages. The emitter follower drives three amplifier stages, as shown in Figure 7, which are isolated from each other by resistors in the transistor base circuits. The outputs of the amplifiers are connected to double tuned filter circuits and the filters are isolated from each other by 1 K resistors at the respective filter inputs. The 10 mw and 20 mw outputs each have a separate amplifier stage to provide additional isolation. Part of the output of the amplifier stage in A11500-1 is connected to Modules A11305-1 and A11306-5 by transformers T-4 and T-5. The circuits in these two modules contain only amplifier stages with the various output filters. The power for all the outputs can be adjusted by using the variable coupling capacitors in the filters. Each of these circuits is adjusted for the power output indicated on the block diagram. Figure 8 is a schematic of a typical amplifier-power divider. Similar circuits supply power to the other eight outputs.

1.3.2.3 Typical Circuits

The frequency synthesizer consists of a number of multipliers, dividers, mixers, amplifiers and filters. Figure 9 illustrates a typical circuit arrangement.

The output of the multiplier or mixer is fed to a wave filter which is driven and terminated in its characteristic impedance.

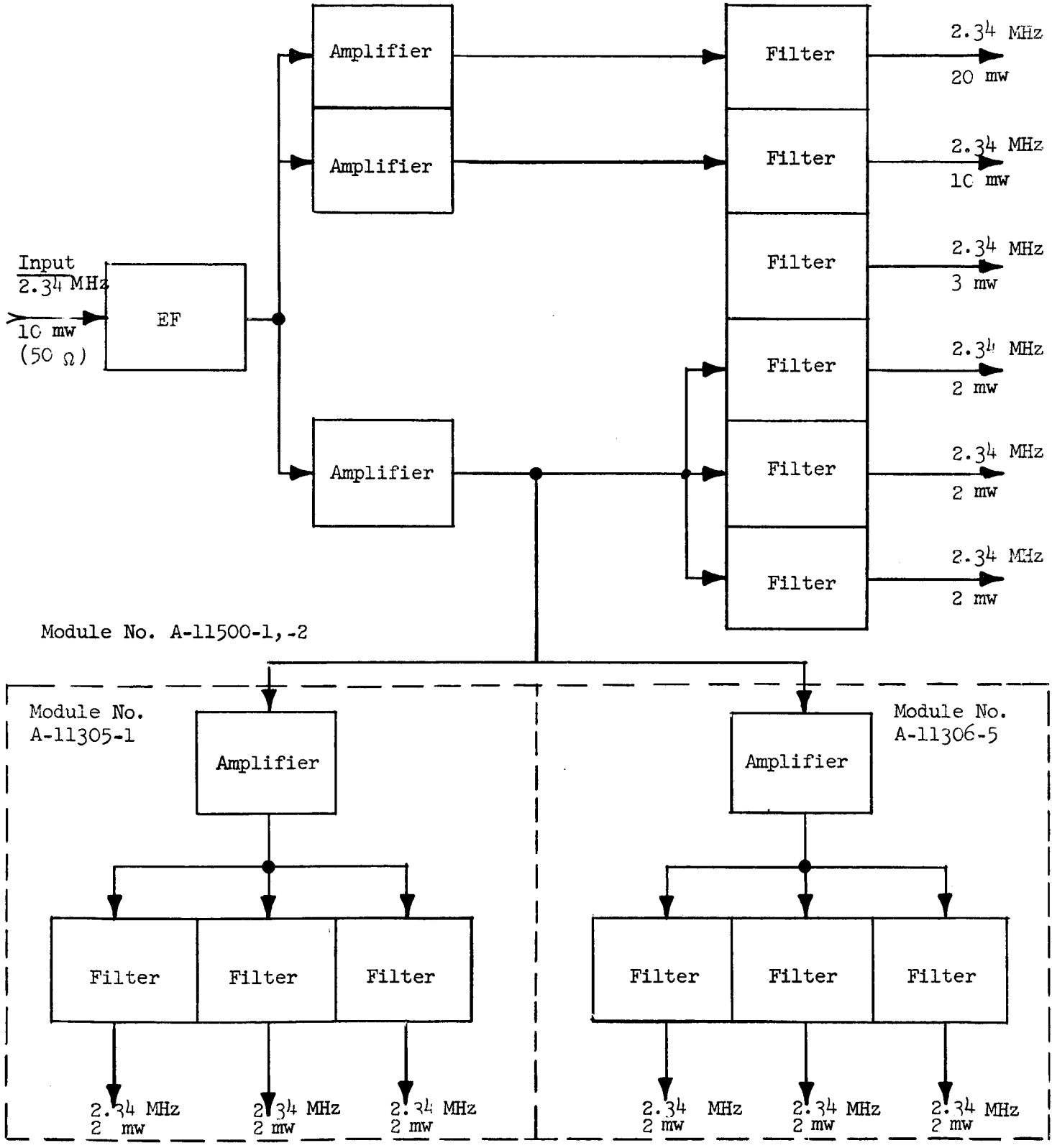

Figure 7. Modules Nos. A-11500-1,-2; A-11305-1; A-11306-5
2.34 MHz Amplifiers and Power Dividers

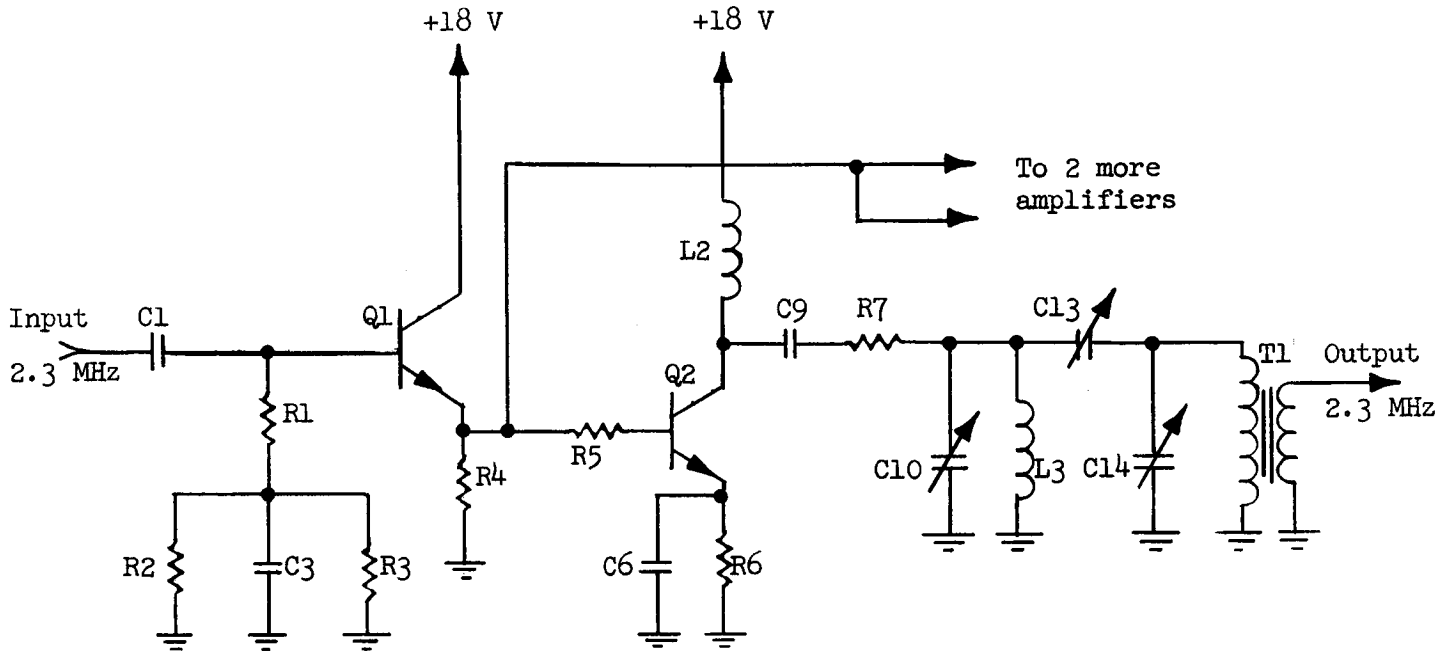

Figure 8. Simplified Schematic of the Power Dividers

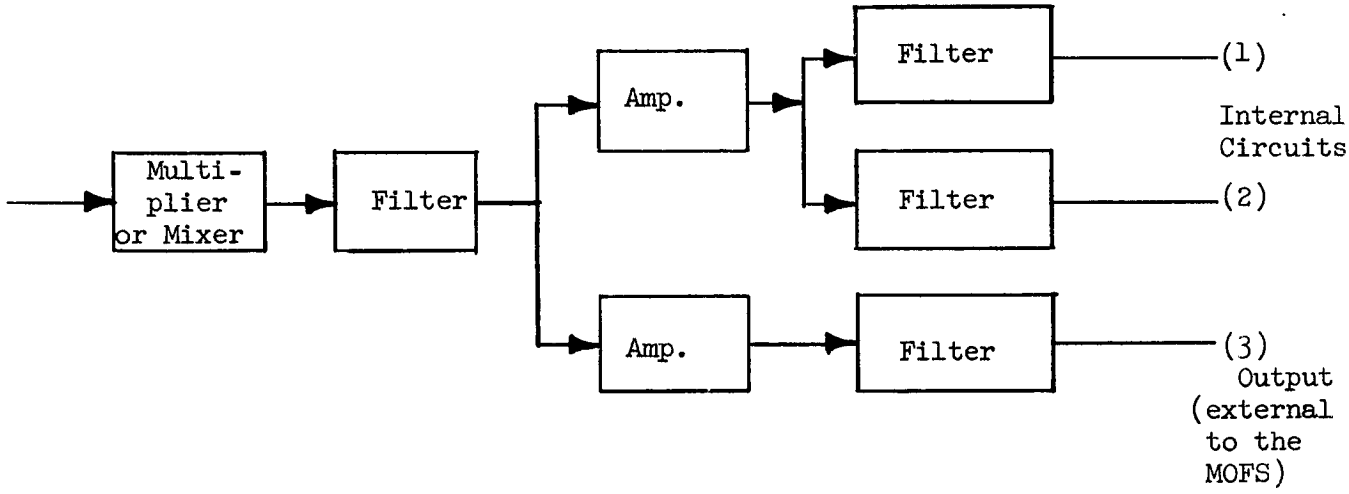

Figure 9. Block Diagram of a Typical Multiplier or Mixer Arrangement

The filter suppresses all harmonics and spurious outputs to 50 db below the signal level. As shown in the block diagram of Figure 9, where there are internal and external circuits to be driven by the multiplier, a separate buffer amplifier and filter is used in each. The filters provide decoupling and isolation between the various circuits being driven as well as elsewhere within the synthesizer.

24

1.3.2.4 Multipliers

All of the X2, X3, and X5 multipliers of the Main Frequency Synthesizer and the Time Synthesizer are of the same basic design. Figure 10 is a simplified electrical schematic of a typical unit.

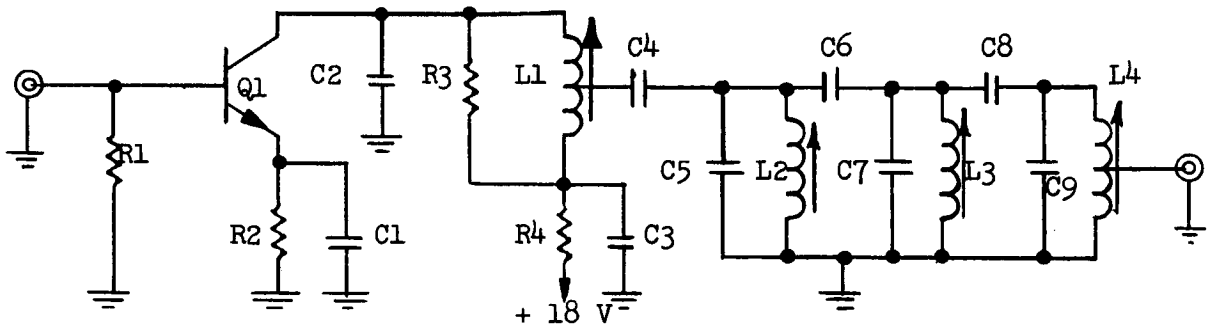

Figure 10. Simplified Electrical Schematic of a Typical Multiplier

The multiplier makes use of a single transistor which is slightly reverse biased when driven at the nominal signal level of 2 mw. Hence, the operation of the multiplier can be described as class C. The output coil is tapped at a point that provides a source impedance to the wave filter equal to the characteristic impedance of the filter.

1.3.2.5 Mixers

Figure 11 is a simplified electrical schematic of a typical mixer. The mixer employs two transistors with the modulation signal driving them in push-pull and the carrier signal applied

simultaneously to both bases, providing a balanced mixer which suppresses the carrier signal at the output. The input and output transformers are broadly tuned.

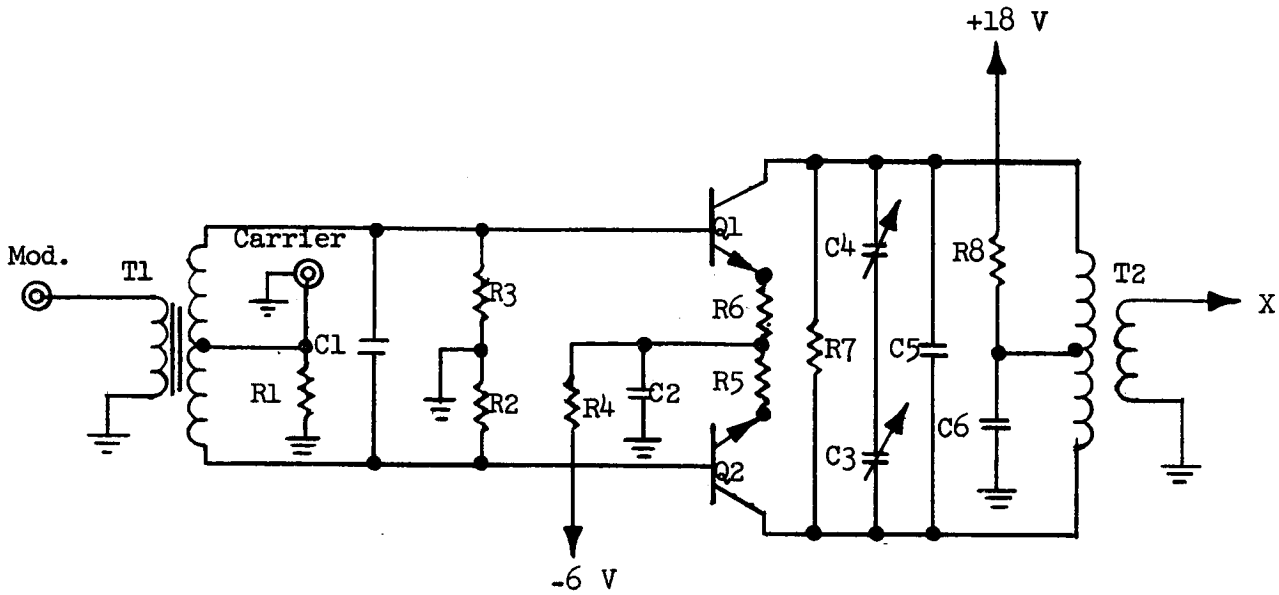

Figure 11. A Simplified Electrical Schematic of a Typical Mixer

1.3.2.6 Filter Amplifiers

A filter amplifier always follows a mixer and a typical schematic of this circuit is shown in Figure 12. Filtering is provided by the two-section filter following the output of the mixer. A tuned, grounded-emitter amplifier following the filter brings the output up to the desired level. Other filter amplifiers consist of a tuned grounded-emitter amplifier and doubled tuned capacitively-coupled filters.

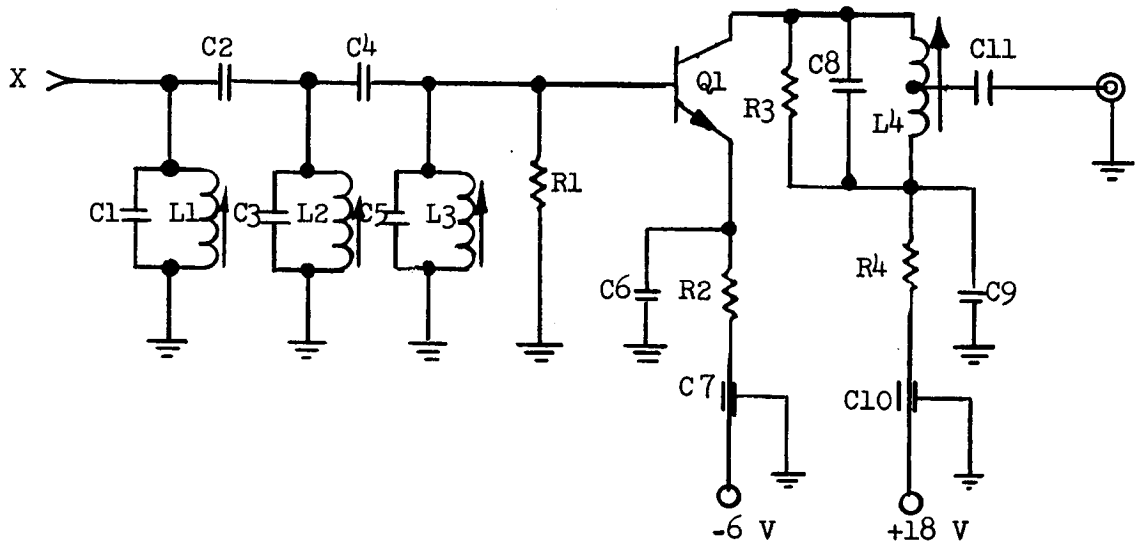

Figure 12. Representative Filter Amplifier

1.3.2.7 Regenerative Dividers

The regenerative frequency divider circuit used in the Master Oscillator and Frequency Synthesizer utilizes semiconductor diodes to achieve harmonic generation. The general configuration of the regenerative divider is presented in Figure 13. Initially, the voltage amplitude of the input signal at a frequency, f_o, must be greater than the threshold of diode CR2 and as long as the gain of the amplifier is quite large, there will be enough amplification to excite the output tank at its resonant frequency, f_o/n.

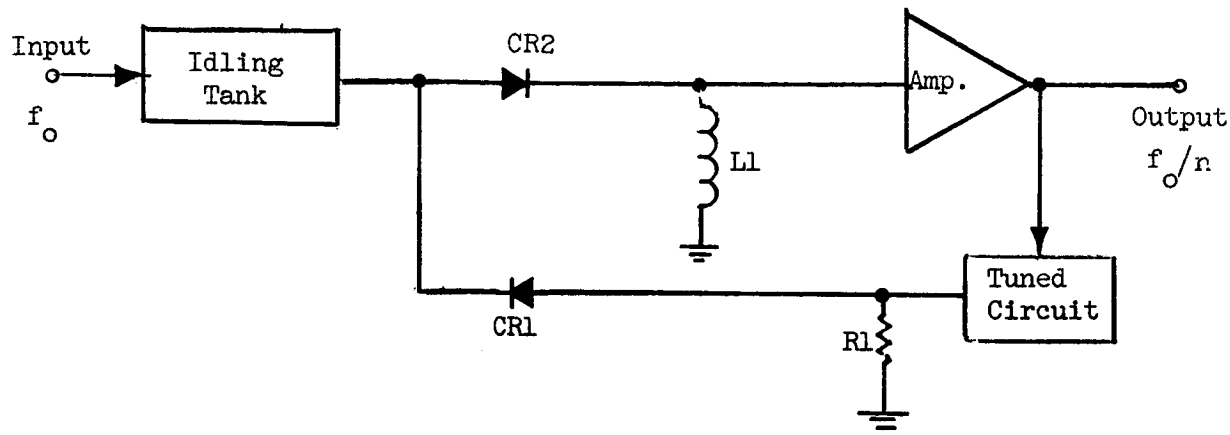

Figure 13. Simplified Electrical Schematic of a Typical Divider

At first there is no d-c component biasing diode CR1 and if the amplification is sufficient to overcome the zero biased threshold level some feedback will result, exciting the idling tank. Once there is feedback, the circuit very quickly reaches steady state wherein diode CR1 generates an (n + 1) harmonic from the output which appears across the idling tank. Diode CR2 mixes the idling frequency voltage with the input to give mixing products. The desired mixing product is the difference between the idling frequency and the input frequency which is selectively amplified by the succeeding bandpass amplifier.

Figure 14 illustrates the block diagram of a typical regenerative divider circuit. Each output is fed to a buffer amplifier and filter which provides isolation and decoupling between the output circuits.

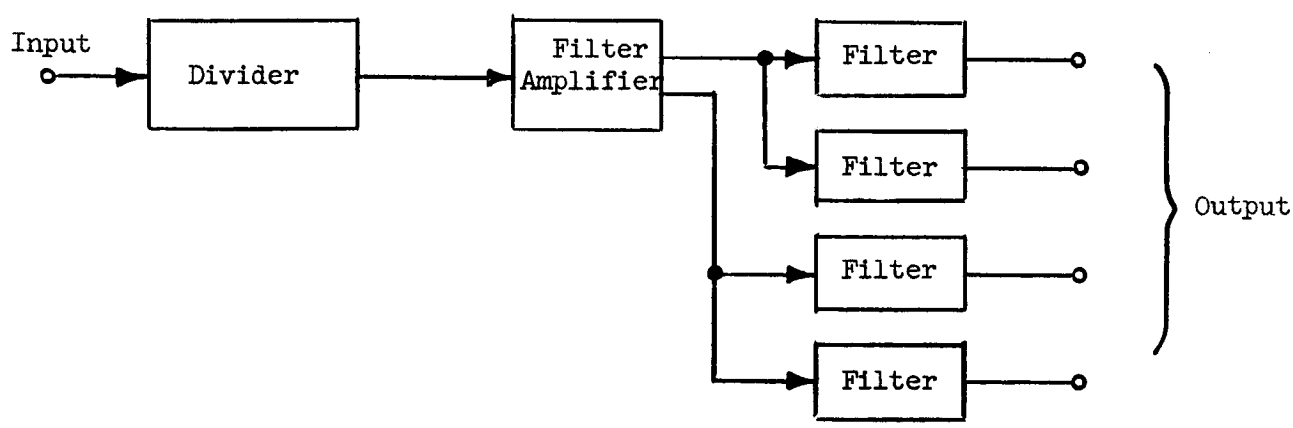

Figure 14. Block Diagram of a Typical Divider Arrangement

1.3.2.8 Binary Dividers

The frequency dividers developed for the Master Oscillator and Frequency Synthesizer are of the regenerative type except the last divide-by-32 circuit (2.287 KHz to 71.47 Hz) which is composed of five cascaded binary stages. The block diagram of the divider chain is shown in the upper left corner of the overall block diagram and is described functionally in Section 1.3.1.

The circuit layout of the binary divider is shown in Figures 15 and 16. The binary stages are identical, each being composed of saturated flip-flops utilizing diode steering gates.

The multiplier chain in Module A11307 is a group of multipliers and power splitters as described above. The X25 multiplier in Module A11306 is also made up of similar circuitry. The dividers and mixers in Modules A11305, A11306 and A11307 are comprised of circuits similar to those described in the paragraphs above.

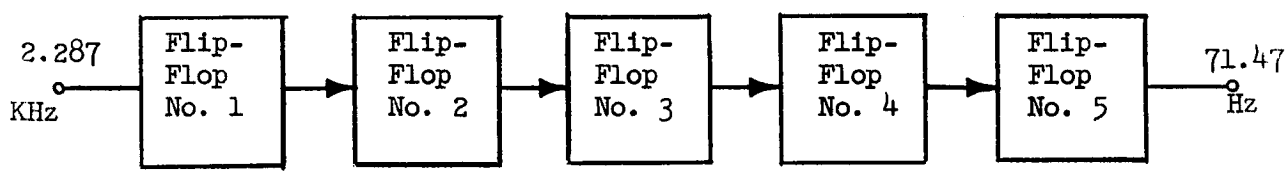

Figure 15. Block Diagram of the Cascaded Binary Stages

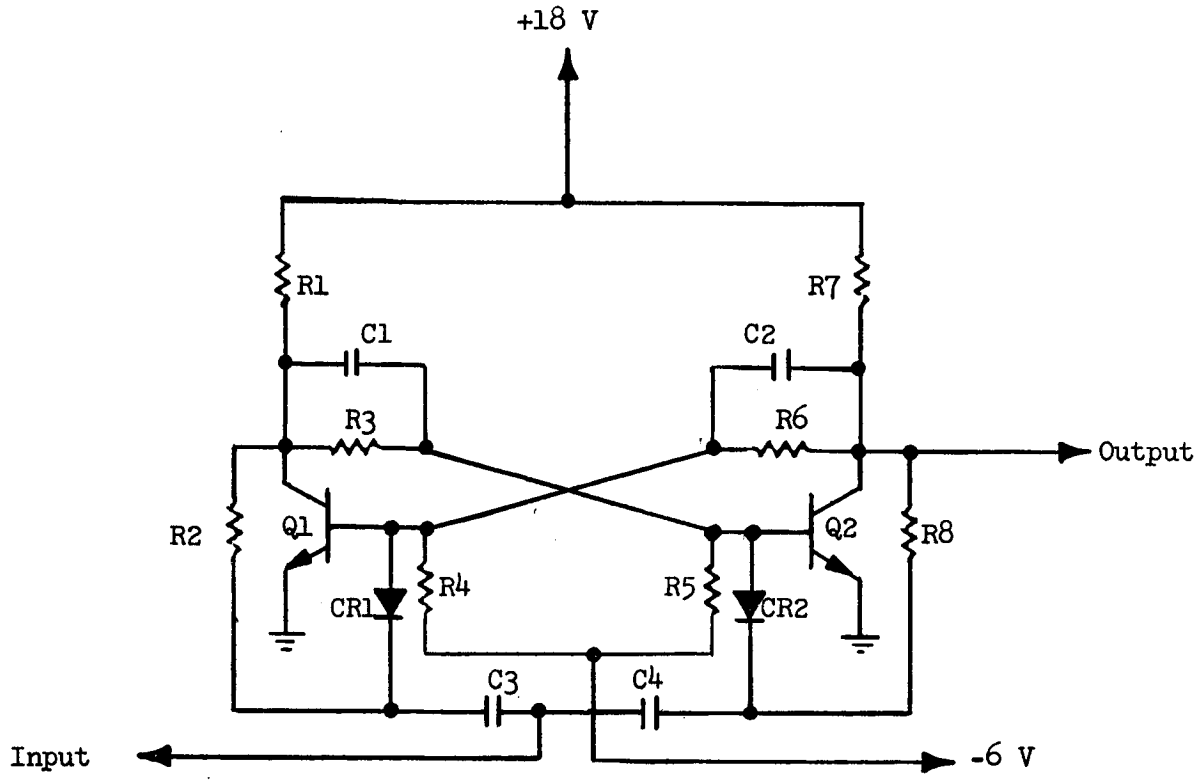

Figure 16. Typical Schematic of Flip-Flop

1.3.2.9 Low Frequency Mixers

A single sideband technique is used in Module A11401 to generate the 2.2156371 KHz and 2.3585815 KHz signals because of the near proximity of spurious signals. The single sideband approach appreciably eases the resultant filtering needs. Each of the buffer amplifiers contain phase shifters to provide two outputs shifted plus and minus 45 degrees from each other. Each pair of outputs, separated by 90 degrees, is used to drive two balanced modulators as shown in the block diagram of Figure 17.

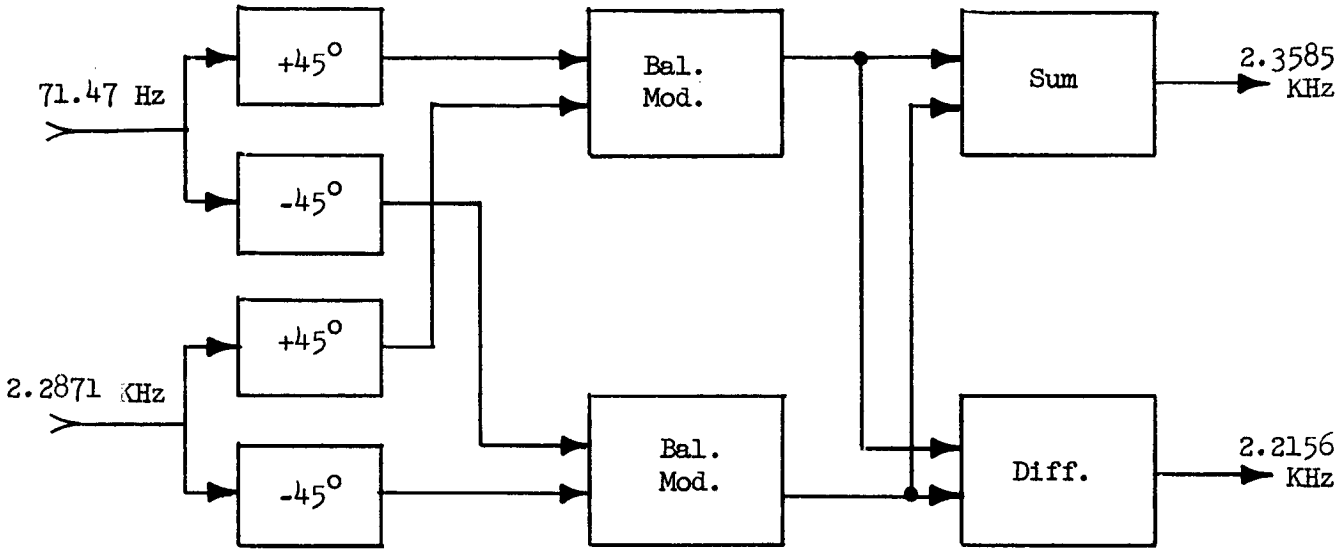

Figure 17. Block Diagram of a Low Frequency Mixer

These balanced modulators are not of the standard type used in the remainder of the unit but are diode modulators as shown in the schematic diagram of Figure 18.

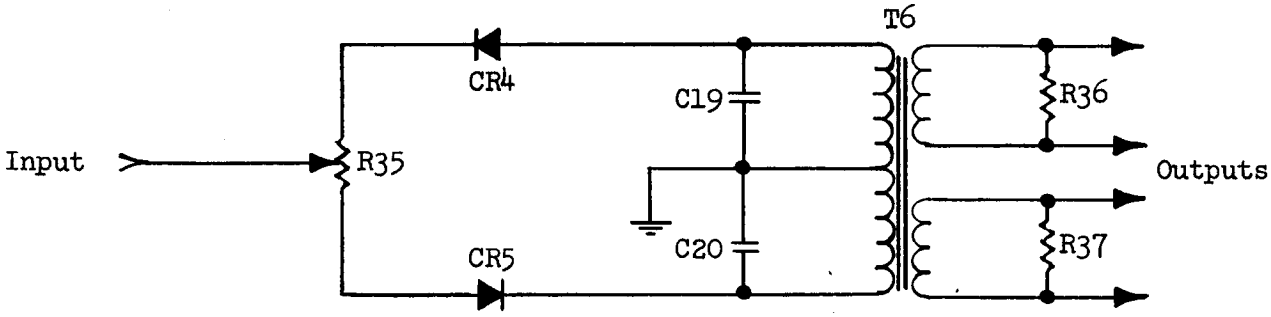

Figure 18. Diode Balanced Modulator

The outputs of each of the balanced modulators contain the sum and difference frequencies or sidebands with the two input signal frequencies suppressed. The phase of the sidebands are such that when the two outputs are summed, one sideband is enhanced while the other is cancelled. The carrier and unwanted sideband are further reduced by the succeeding filter amplifier which is of the three-stage bandpass type with a tuned feedback path around each of the first two stages as shown in Figure 19.

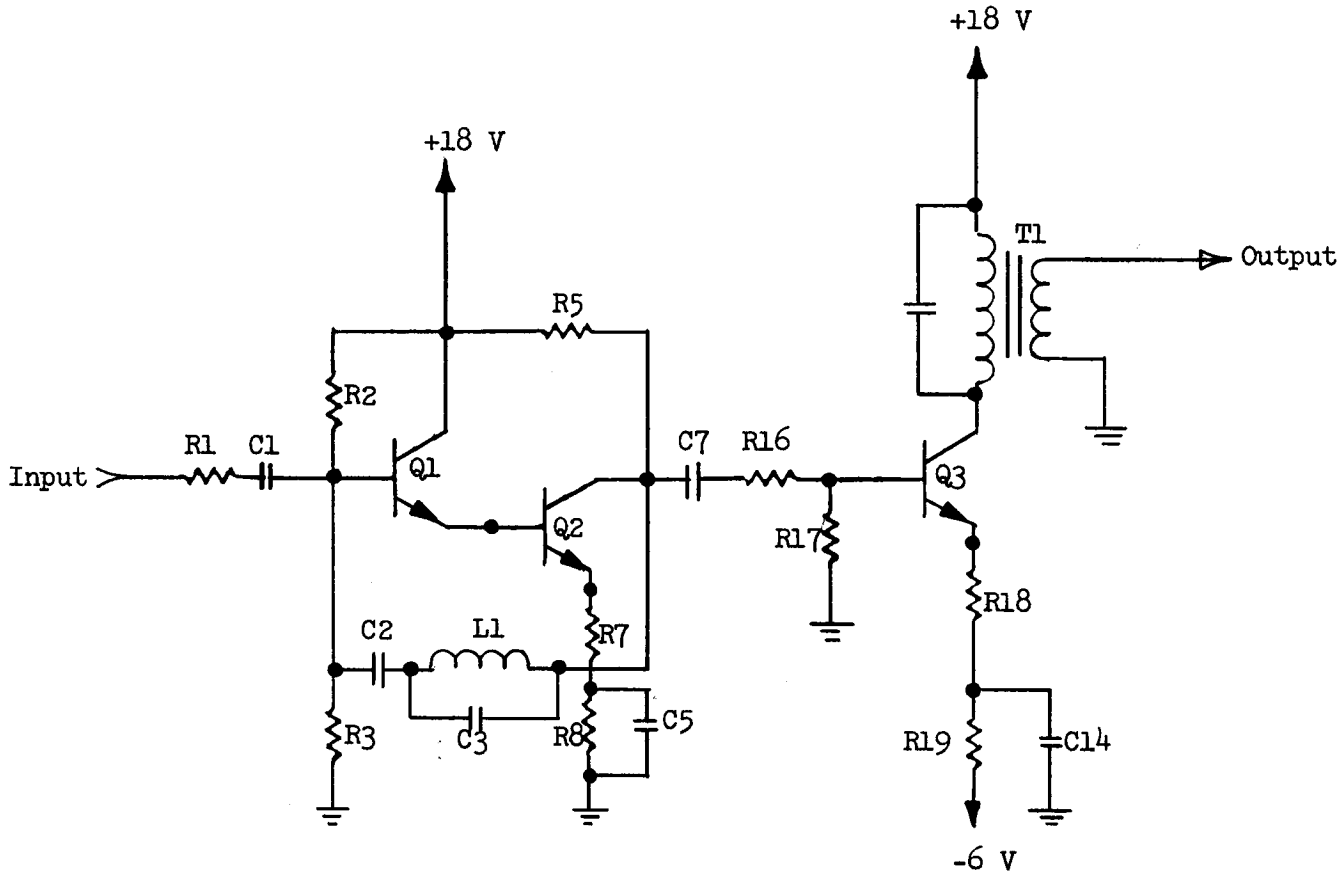

Figure 19. Filter Amplifier

The mixers, filter amplifiers, and power dividers following the low frequency mixers are of the conventional type described earlier.

1.3.2.10 Phase Shifters

The phase shifters in Module A11304 are novel in their circuitry design. The module contains four similar phase shifter circuits tuned to four different frequencies each near 2.3 MHz. The block diagram is shown in Figure 20. A continuously variable phase shift is provided over 360 degrees by use of the rotary switch and the control in the variable phase shifting network. The rotary switch

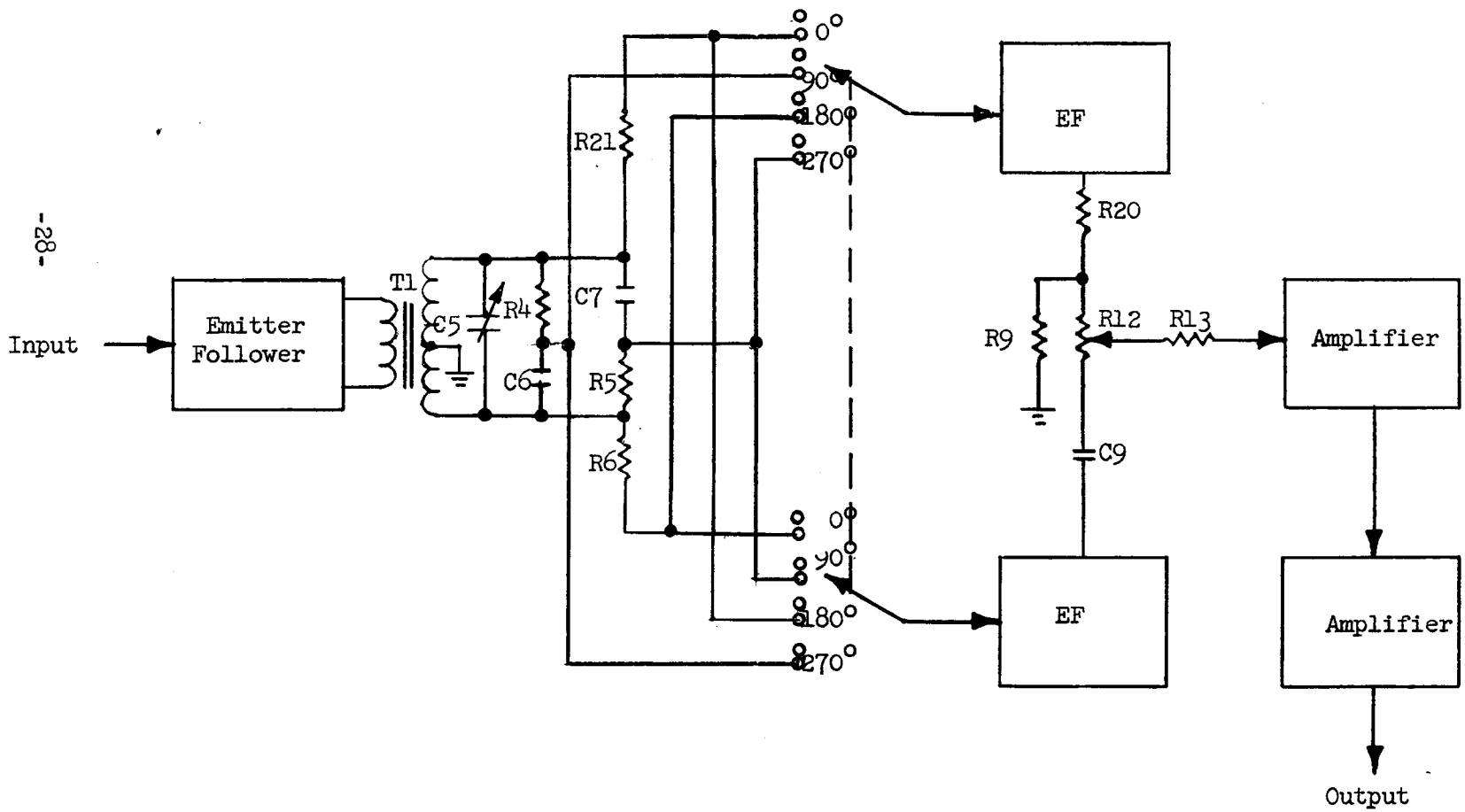

Figure 20. 2.3 MHz Phase Shifter

shifts the phase in 90 degree steps over a range of 270 degrees and the variable phase shifting network provides a vernier adjustment of phase shift within each step position.

The input signal power required by Module A11304 is 2 mw and the four frequencies are 2.342 MHz, 2.2688 MHz, 2.34082 MHz, and 2.34089 MHz, respectively. The base of the input emitter follower is shunted with 50 ohms to provide the correct load for the input signal and the output of this stage drives a transformer and two R-C phase shifting networks. The transformer and the R-C networks produce two signals separated by 180 degrees and with approximately equal amplitude. They are shifted in phase at 90 degree intervals. The outputs of the fixed phase shifting network are connected to the rotary switch and drive two emitter followers. The emitter followers provide the high input impedance necessary to prevent loading of the fixed phase shifters and also provide a low driving impedance for the variable R-C network. The variable phase shifter consists of a 5000-ohm potentiometer and a 100 μμf capacitor. By varying the resistance of the 5000-ohm potentiometer, the output signal can be shifted in phase over a range greater than 90 degrees with only a small change in amplitude. The amount of amplitude variation is a function of the load presented by the following amplifier stage; therefore a large resistance is used in the base of the first stage following the control. The last stage provides the necessary gain and filtering to furnish an output of 10 mw.

1.3.2.11 Phase Detector

The block diagram of the 20 KHz phase detector and integrating d-c amplifier used in the synthesis of the 100 KHz signal is shown in Figure 21. The phase detector is of the balanced type where there is diode conduction during each half cycle for both in-phase and out-of-phase signals. Referring to the schematic in Figure 22, the two inputs to the phase detector are amplified by Q-7 and Q-8 and the outputs drive the diode detector circuit. The two voltages applied to the diodes

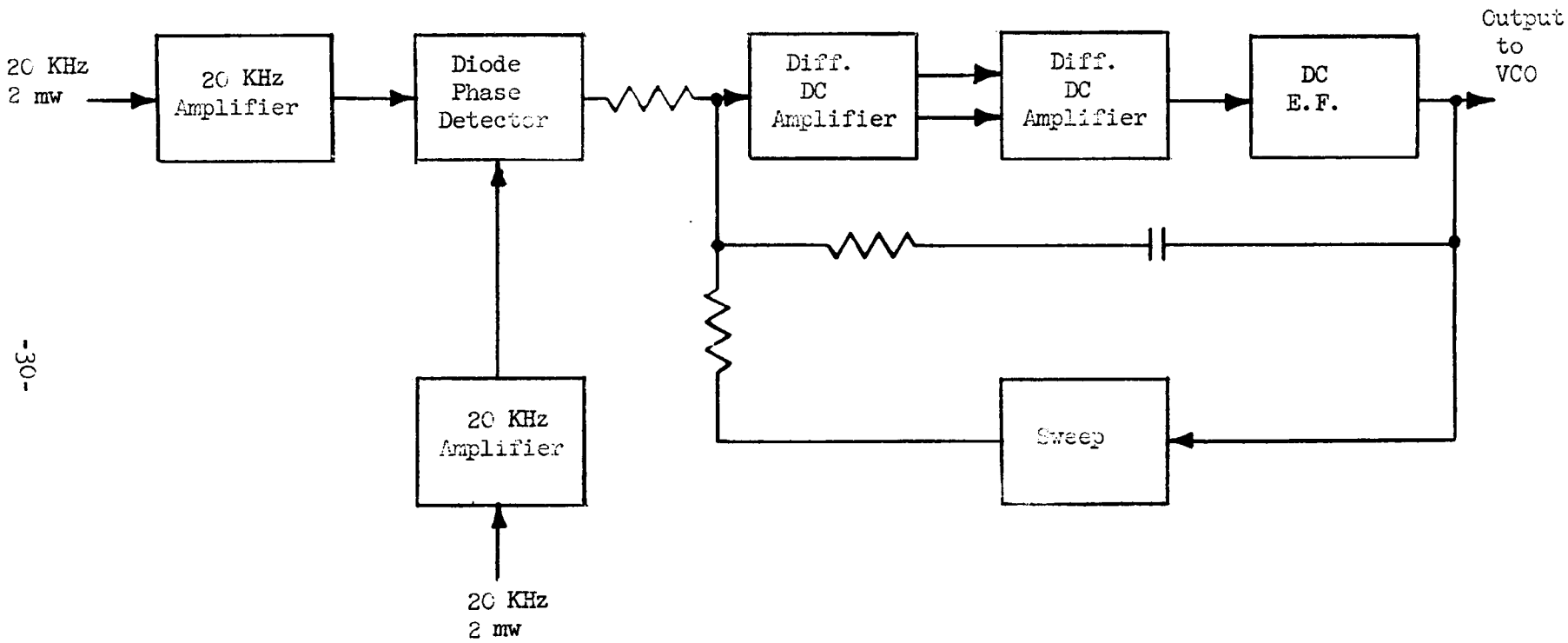

Figure 21. Module No. A-11502-5
20 KHz Phase Detector and DC Amplifier

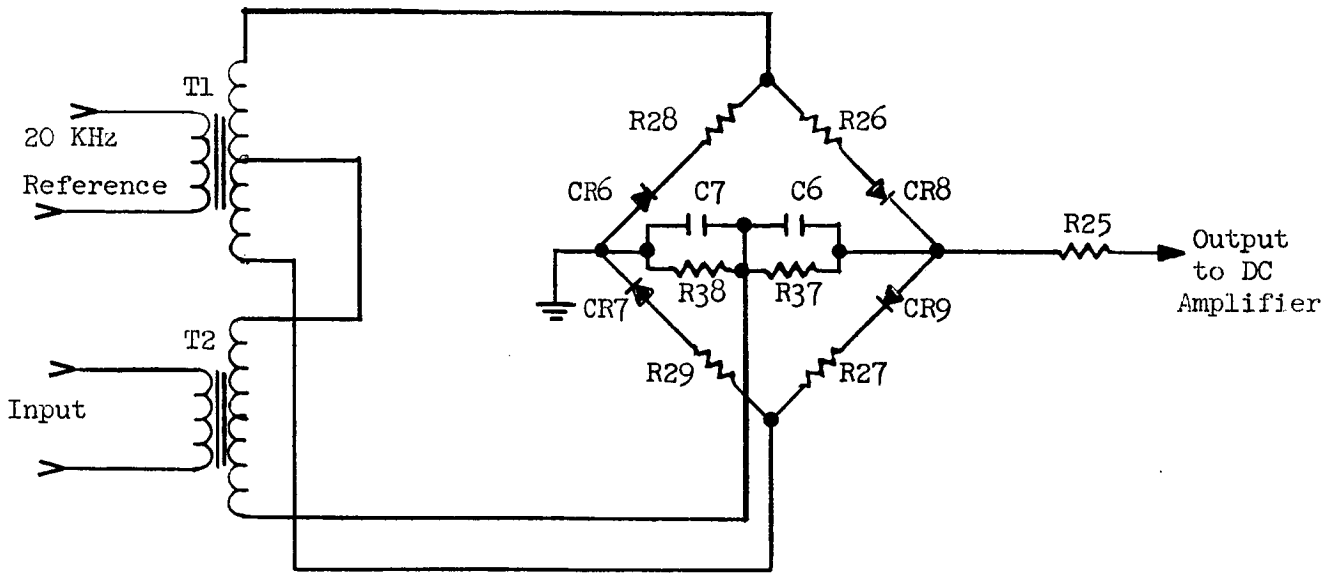

Figure 22. Phase Detector Schematic

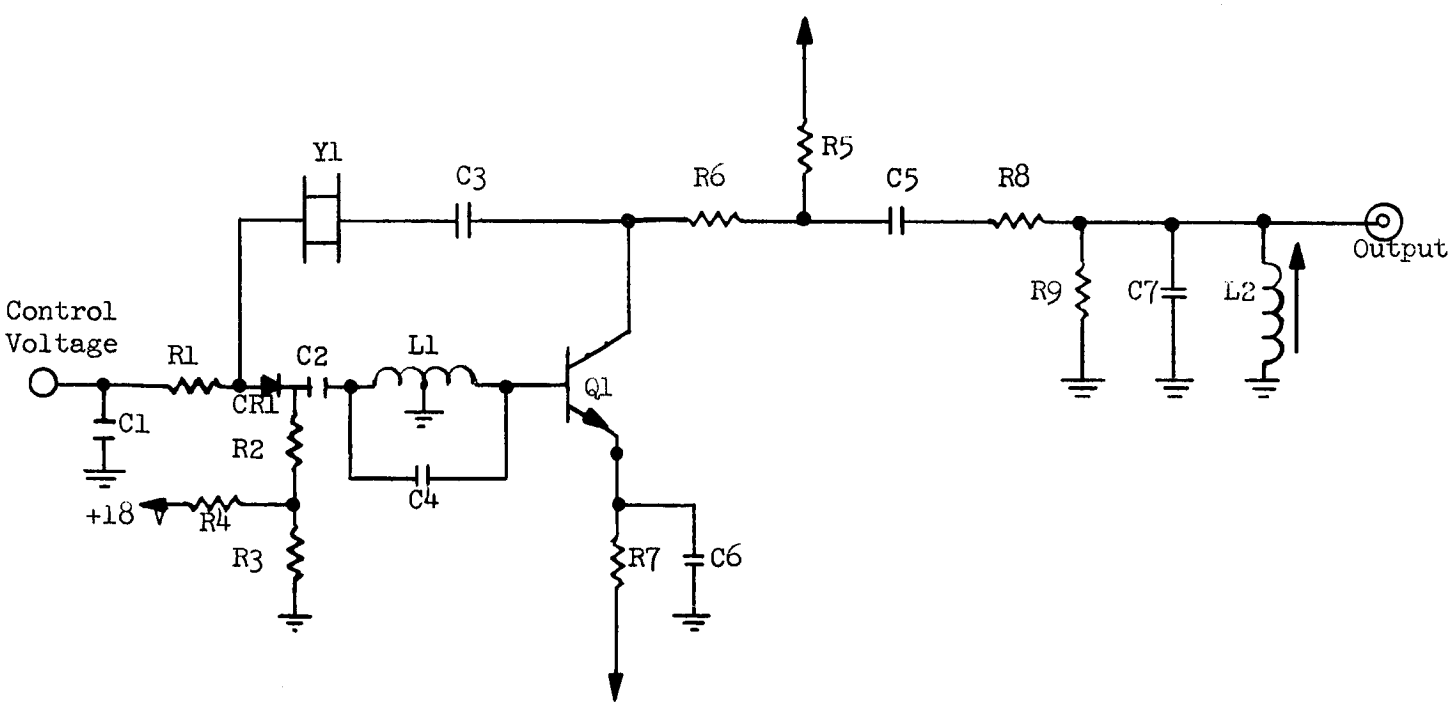

Figure 23. VCO Schematic

are approximately equal in amplitude and when the signals are in phase a maximum negative output voltage is obtained due to the conduction of CR-9 and CR-7. When the signals are 180 degrees out of phase, a maximum positive output is obtained due to the conduction of CR-8 and CR-6. The output voltage is zero when the inputs are 90 degrees out of phase.

1.3.2.12 Integrating Amplifier

The integrating d-c amplifier consists of two differential amplifiers and an emitter follower. The phase detector output is coupled to the differential amplifier stage at the input of the integrating d-c amplifier. The differential amplifier stages are used to minimize output voltage drift and a common heat sink is used for both differential amplifiers to keep the transistors as close to the same temperature as possible, thereby reducing the deleterious effects of varying transistor leakage currents as the ambient temperature changes. The input differential amplifier circuit contains a balancing potentiometer to adjust for balanced output at the collectors of the second differential stage. The total gain of the d-c amplifier is approximately 800. An R-C feedback circuit is used to obtain the integrating action and provides the necessary loop filtering.

1.3.2.13 VCO Sweep

The 100 KHz VCO is swept in frequency when the loop is not locked to acquire. The frequency sweep is accomplished by generating a symmetrical sawtooth waveform with the integrating amplifier. This is done by using the output of the integrating amplifier to trip a bistable multivibrator which in turn is used to drive an input to the integrating amplifier. This is shown in the block diagram in Figure 21. When the output of the integrator reaches 5.5 volts, the multivibrator is tripped through the biased diode and the input to the integrating amplifier is reversed. The output goes down until it reaches 2.3 volts where the multivibrator is tripped through the other biased diode and the integrating amplifier starts up. This process will continue until the loop is properly locked to the Master Oscillator.

1.3.2.14 Voltage Controlled Oscillator

The 100 KHz VCO is basically similar to the Hartley oscillator circuit in that it obtains its positive feedback by using the phase reversal of the tapped oscillator tank circuit. The natural frequency of the oscillator is largely determined by the high Q, series resonant crystal in the feedback loop. Small changes in frequency can be made by changing the capacity in series with the crystal. The Varicap diode is placed in the feedback loop in series with the crystal as is the 47 pf temperature compensating capacitor. The d-c input from the integrating amplifier is applied across the Varicap to control the oscillator frequency. (See Figure 23 for schematic.)

1.3.2.15 Frequency Determination Loops

The three VCO loops that appear on the right of the master block diagram are comprised of standard mixers, multipliers, and filter amplifiers. The phase detectors are similar to those described above for the 100 KHz VCO loop. The oscillator is a feedback type modified Pierce oscillator with the crystal operating in the series resonant mode. The feedback loop is from collector to base. The output is taken from a low impedance point in the loop to improve frequency stability due to load variations. Circuit Q is maximized by using the minimum drive that will sustain oscillation. The C_o and C_i of the transistor are swamped by the feedback loop capacity. Low impedances in parallel with the base and collector of the transistor tend to render any change in input or collector impedances negligible, thus reducing phase shift caused by the amplifier itself. The total oscillator and buffer power dissipation is kept to a minimum (35 mw) to minimize the oven power requirements, as this total circuit is packaged within the oven. The supply voltage is regulated with a low temperature coefficient reference diode.

1.3.2.16 X32 Local Oscillator Chain

The 66 MHz signal from the VCO in Module A11801 is multiplied up to 2214.826 MHz by the circuitry in Module A11900. The 66 MHz signal is first multiplied by 2 in an active doubler, then amplified in a power amplifier whose output is impressed upon two cascaded passive quadruplers. Figure 24 is a schematic of the doubler and power amplifier. The doubler circuit utilizes a 2N918 transistor with an emitter bias resistor to provide emitter-to-base reverse bias varying as a function of input signal level. The value of the bias resistor was chosen to provide optimum conduction angle for doubling at an input level of 10 mw. The interstage coupling between the doubler and power amplifier consists of a double-tuned circuit with capacitive mutual coupling. The input impedance of the 2N2219 power amplifier, 750 ohms, is obtained at the collector of the doubler by the interstage transformer and coupling capacitor. The coupling capacitor is variable and provides a method for adjusting the power output level. The 50 ohm load impedance is transformed up to approximately 300 ohms at the collector to provide maximum power output.

Good source impedance stability for the UHF varactor quadrupler is insured by the 100-ohm resistor across the output of the preceding amplifier. The output signal level of the varactor multipliers would drop excessively at the lower temperature limit if it were not for the thermistor compensation network employed in the transistor doubler. The latter's output is power supply voltage limited, however, at low temperatures the d-c collector voltage is increased as the resistance of the thermistor is decreased. Hence, the output of the multiplier increases with decreasing temperature to compensate for the fall-off in the following multipliers.

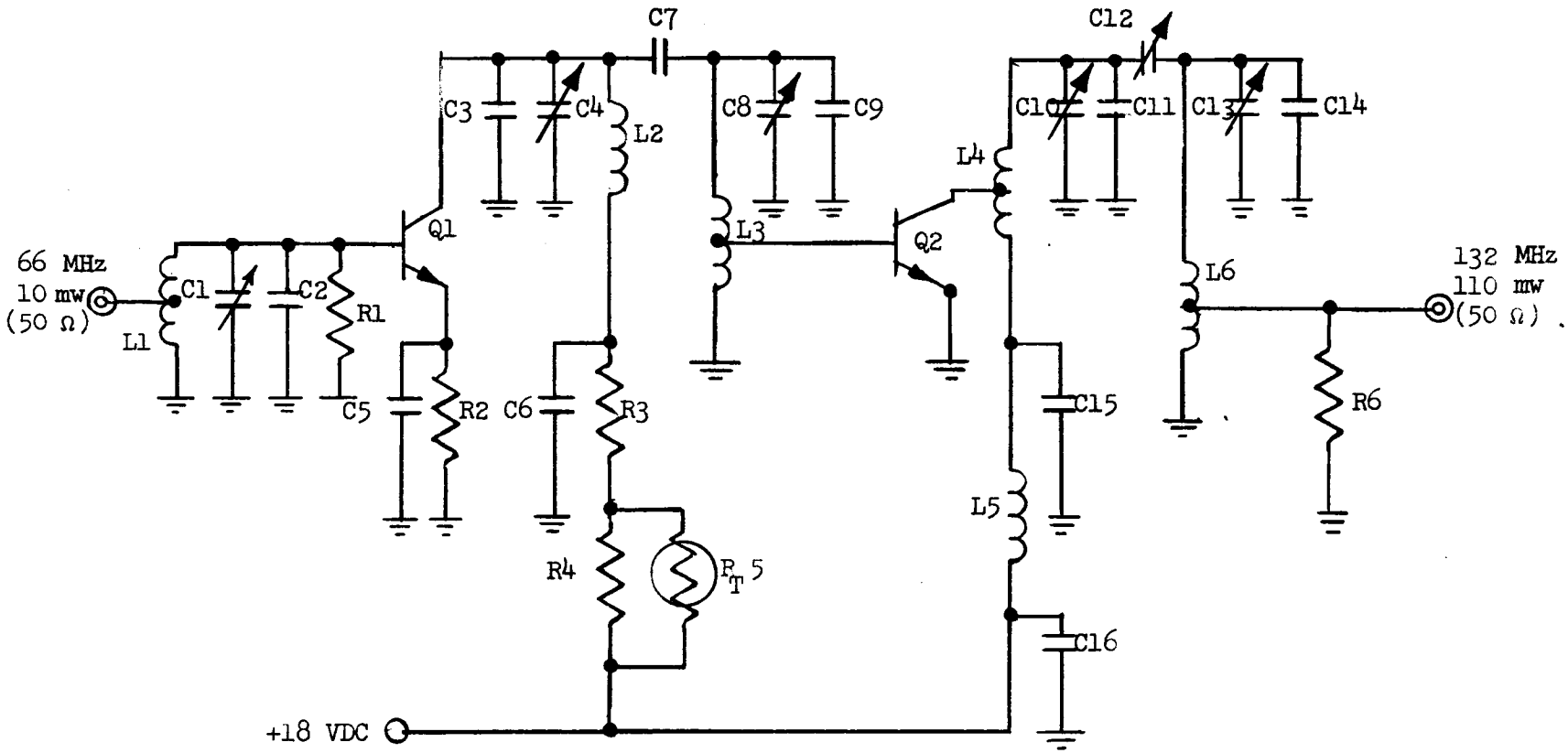

Figure 24. Doubler and Power Amplifier

1.3.2.17 Varactor Quadrupler

40 The power amplifier drives two varactor quadruplers to obtain the desired output frequency. (A typical quadrupler schematic is shown in Figure 25.) The varactor harmonic quadrupler is a combination of three resonant circuits coupled together through a common impedance which is the varactor diode itself. Ordinarily the varactor impedance is small compared to the reactances in any of the resonant loops, thereby creating a division of current. One loop, resonant with the diode at the fundamental frequency, is coupled to the input. Another loop, containing L2 and C3, is resonant with the diode at the second harmonic frequency. The second harmonic is the idler frequency necessary to achieve maximum efficiency by allowing second harmonic currents to flow. The third loop is resonant with the diode at the fourth harmonic and is coupled to the output. The frequency range for the above multiplier is such that lumped constant components were most suitable for its construction. The second multiplier is identical in principle and circuit concept, but a stripline configuration is used rather than lumped constants. The stripline technique facilitates the construction of resonant circuits at higher frequencies where distributed elements are substituted for lumped constant components. The efficiency is somewhat reduced in comparison to coaxial transmission line by the loss tangent of the dielectric materials involved. The varactor diode was selected based upon conversion efficiency over the operational frequency range and power level.

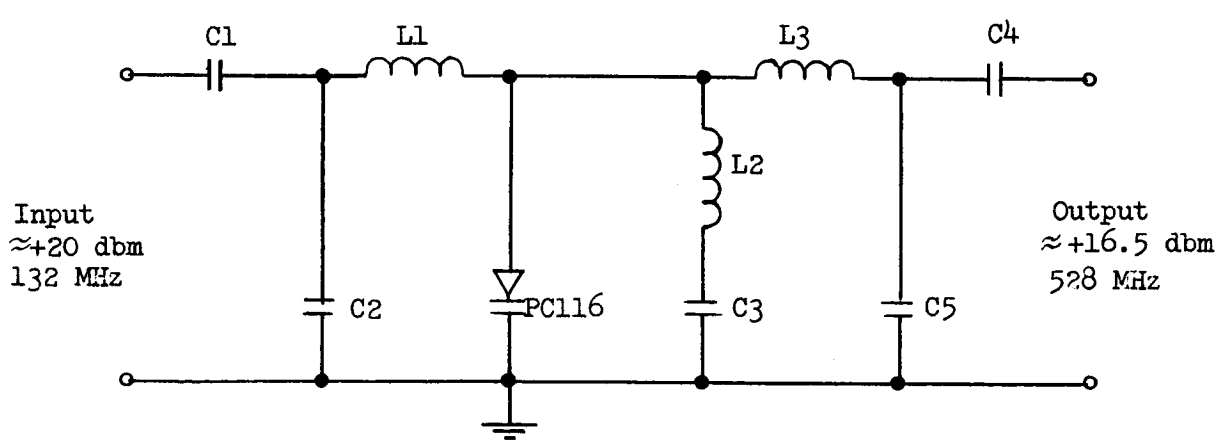

Figure 25. Quadrupler Schematic

41

An interdigital bandpass filter is used following the multipliers to prevent undesired harmonics at the local oscillator chain output. It has the following characteristics:

Interdigital Bandpass Filter

Center frequency - 2115 MHz

VSWR - less than 1.5 to 1 from 2058 MHz to 2172 MHz

Nominal impedance - 50 ohms

Passband insertion loss at 2115 MHz - 1.5 db maximum

3 db relative bandwidth - 2051.5 MHz to 2178.5 MHz

Stop band attenuation - 25 db minimum at 2020 MHz
- 25 db minimum at 2210 MHz

The output of the bandpass filter is fed into a three port junction circulator, the third port of which is terminated in a matched load. The remaining ports are the input and output terminals. The resulting performance is that of a ferrite isolator, where the input signal is allowed to pass through the device with little attenuation and any reflections resulting from external sources are absorbed in the third port termination. The characteristics are as follows.

Insertion loss (db)	0.4
Isolation db	33.5

1.3.2.18 Power Supplies

The three power supplies are sealed units manufactured by Technipower. They are regulated supplies with ample capacity to provide current for the associated circuitry.

1.3.3 Power Distribution

The power input to the MOFS is provided at 115 V AC, 60 cps at a nominal current of 0.65 amperes. It is converted to three DC voltages, -6 V, +18 V and +24 V, by three Technipower power supplies. The -6 V DC and +18 V DC are used in all modules to operate the circuitry and the +24 V DC is used only in the Master Oscillator oven thermal control circuitry. Line filtering has been provided in each module to eliminate any cross coupling between modules through the common power supply impedance. Also, each stage is decoupled from the power supply within the modules itself.

The nominal current drain by module, is given in the following table.

Table 1. Tabulation of Module Currents

	Module Currents at Indicated Voltage Levels (ma)		
Module	-6 V	+18 V	+24 V
A11200	---	---	Approx. 70
A11300	10	8	---
A11301	9	18	---
A11302	22	22	---
A11303	12	32	---
A11304	56	54	---
A11305	21	35	---
A11306	37	42	---
A11307	66	86	---
A11400	35	79	---
A11401	25	43	---
A11500	34	51	---
A11501	16	19	---
A11502	33	37	---
A11503	26	29	---
A11600	11	12	---
A11601	39	38	---
A11700	14	14	---
A11701	34	33	---
A11800	12	12	---
A11801	40	40	---
A11900	---	58	---

1.3.4 Temperature Control

The MOFS must dissipate 14 watts of power within the circuitry which constitutes a small amount of energy to be dissipated in a unit of its mass. Convection and natural conduction should be sufficient to cool the unit provided that there are no high heat producing units mounted in the same rack below the MOFS. Most any standard rack ventilation blower is adequate to maintain the MOFS in a safe thermal operating range if the room or aircraft ambient is comfortable for the equipment operators.

1.4 Special Tools and Test Equipment

The following items or equivalent are required to perform minor alignment of the Master Oscillator and Frequency Synthesizer in the field.

Alignment Cover Plates
(Cover plates with holes located over the variable components to be used during alignment.)

Non-metallic alignment tools (2 each)

Differential Voltmeter, Boonton Model 98A

VOM, Triplett Model 630-A or equivalent

RF Voltmeter, Hewlett-Packard 410B

Signal Generator, HP606A (2 each)

Electronic Counter, HP524A

Freq. Converter Unit HP525A

Field Intensity Meter, Empire Devices, NF105

Tuning Unit, Empire Devices, T-A/N105

Tuning Unit, Empire Devices, T-1/N105

1.5 Maintenance

1.5.1 Maintenance Precautions

To minimize maintenance the circuitry in the MOFS has been designed to accommodate the greatest possible latitude in component variation while still operating properly.

Outside of the normal precautions taken when servicing RF and AF transistor circuitry, such as loading unused outputs to prevent erroneous measurements, no special precautions need be taken in maintaining the MOFS. No high voltages or high powers are present in the equipment.

1.5.2 Alignment Procedures

All of the frequency selective circuits are synchronously tuned. Before tuning, the cover plate over the r-f side of the module is removed and replaced by the special alignment cover plate. The tuning slug for the variable inductors are adjusted from the d-c or under side of the modules. The cores are locked in place with a nylon locking screw accessible from the top or r-f side of the module. The locking process takes place simultaneously with the tuning procedure. After tuning the module, the alignment plate is removed and the original cover plate is installed prior to inserting the module into the main chassis. The alignment procedures pertinent to the indicated modules are outlined below. The jack numbers called out in the tuning procedures below are those which are on the individual module under discussion.

Master Oscillator

A. Module A11200

There is one control on the Master Oscillator, the fine frequency setting adjustment, which is the external capacitor mounted below the oscillator on the chassis. To adjust, connect the oscillator to the A11500 Module in its normal operating configuration and connect a very accurate counter to monitor the output or compare the oscillator output to a secondary frequency standard. Adjust the oscillator frequency to 2.342000 MHz. CAUTION - NO NOT ATTEMPT TO ADJUST UNLESS A SUITABLY ACCURATE REFERENCE IS AVAILABLE.

B. Module A11300

Divide-by-8. The idler tank is tuned to 512.3125 KHz. To tune the idler, supply this frequency to J1 and tune L1 for a maximum

signal across L2 in Section 4 of the module. Apply a 585.5 KHz signal to J1 and tune L3 for maximum response at 73.1875 KHz at the base of Q2 also in Section 4. The amplifier in Section 4 and the filters in Section 3 have fixed components and cannot be tuned. An 8 to 1 Lissajous figure can be observed on an oscilloscope with the input 585.5 KHz signal on the horizontal input and the 73.1815 KHz output signal present at J6 on the vertical input. Slight adjustments on L1 and L3 should be made to maximize the allowable frequency variation of the input at J1 on either side of 585.5 KHz before the 8:1 division factor is lost.

The divide-by-4 amplifier and filters are fixed tuned and cannot be adjusted.

C. Module A11301

Divide-by-4. The idler tank, consisting of C1 and L1, is tuned to the difference frequency of the input and output -- 1.7575 MHz in this case. This is accomplished by inserting a 1.757 MHz signal in J11 and tuning L1 for maximum voltage across L6. With a 2.342 MHz input, L2 is tuned for a maximum output measured at the base of Q2. A 4 to 1 Lissajous figure can be observed on an oscilloscope with the 2.342 MHz input signal on the horizontal input and the module output, J7, J8, J9 or J10 on the vertical input. Slight adjustments of L1 and L2 should be made to allow the frequency of the input to be varied an equal amount on either side of 2.342 MHz before the 4:1 division factor is lost.

Power Divider, Section 2. If the divide-by-4 circuitry in Module A11301 is operating properly, each of the three filters in this section have a 585.5 KHz input signal. The inductors are tuned for a peak output from each filter. The outputs of the filters must be loaded with a 50 ohm termination during any tuning adjustment. Each output is 2 milliwatts when properly tuned.

Power Divider, Section 3. Same as Power Divider, Section 2.

D. Module A11302

All tuned circuits in this module have fixed components and cannot be tuned. The variable capacitors in Sections 3 and 4 are used to balance out crystal holder capacity and are factory adjustments. Do not attempt to adjust these.

E. Module A11303

Power Divider. Apply a 2.342 MHz signal to the J5 input in Section 5. Tune the filters for a maximum 2.342 MHz signal at each of the outputs of the power divider. Outputs can be measured at J6, R11 in Section 1, R2 in Section 2, and R2 in Section 3. Tuning adjustments are found in Sections 5, 2, and 3, respectively.

2.2688 MHz Mixer. Apply a 73.18 KHz signal to J8 in Section 5. Tune C10 in Section 1, L5 in Section 5, and C13 in Section 4 for a maximum at the 2.2688 MHz output, J3. This completes the tuning of this mixer.

2.34089 MHz Mixer. Apply a 72.079 KHz signal to J10 and tune C9, L2, and C13 in Section 2 for a maximum signal across R1 in Section 1.

2.34082 MHz Mixer. Apply a signal at 72.008 KHz to J1 and tune C9, L2 and C13 in Section 3 for maximum response across R1 in Section 4. Add a 73.18 KHz signal to J4 and tune C3, L1 and C9 for maximum output at J2.

F. Module A11305

Amplifier - Power Dividers. Apply 2.342 MHz to J3 in Section 1. Tune the input, C2, and each of the filters for a maximum at the three outputs of the power divider, J1, J2, and across C1 in Section 3.

Divide-by-5. See Module A11301 for a tuning procedure. The idler tank, L1 and C2 in Section 3, is tuned to 1.8736 MHz and the output is tuned to 468.4 KHz. The amplifier and filter are synchronously tuned for a peak power at the base of Q1 in Section 4.

X-3 Multiplier. In Section 4, the first stage and filter, T1, L2, and L3, are tuned for a peak at the collector of Q2. The three outputs are tuned to peak the signals at J4, J5, and C1 in Section 5 by T4, T5, and T6, respectively.

Divide-by-2. See Module A11301 for tuning procedure. The idler tank, L1 and C2 in Section 5, is tuned to 702.6 KHz as is the output. The amplifier and the filter are tuned for a peak signal at the output terminal of T2. Assuming the above circuits are properly tuned, a 4.684 MHz signal is applied to J6. L1, L2, and L3 in Section 2 are tuned for a peak output at J7.

G. Module A11306

2.342 MHz Power Divider. Insert a 2.342 MHz signal into J4 in Section 5. Tune C2 for a peak signal at the collector of Q1. Tune each of the output filters for a maximum output. Each output must be loaded with 50 ohms or the input to the succeeding module.

X-25 Multiplier. With a 2.342 MHz signal at the input, J4 or J5, T1 is tuned for a peak of the 11.71 MHz at the base of Q2 in Section 2. L1, L2, and L3 are also tuned for a maximum at 11.71 MHz at the base of Q2. T2 and T3 are tuned for a peak 58.5 MHz signal at the output of T3 or the base of Q1 in Section 1. The 58.55 MHz amplifier and power divider in Section 1 are synchronously tuned. The amplifiers and filters should be tuned for a peak output at each of the three outputs, J6, J7, and J8.

19.4386 MHz Mixer. With a 14.052 MHz signal at J12 and a 5.386 MHz signal at J14, tune for response at 19.4386 MHz outputs, J13 and J15. Terminate J15 with a jumper to J9 which is its normal termination and measure the signal with a Tee adaptor in the jumper cable.

20.8438 MHz Mixer. Apply a 19.4386 MHz signal to J9 and a 1.4052 MHz signal to J10. Peak all inductors for a maximum output at 20.8438 MHz at J11.

H. Module A11307

X-2 Multiplier and Power Divider. Supply a 2.342 MHz signal to J10. The multiplier in Section 1 near the connector is tuned for a maximum 4.684 MHz output at T2 by adjusting T2. Each of the three amplifiers and filters in Section 5 are tuned for maximum response at their respective outputs, J6, J7, J8, and the base of Q1 in Section 3. The input to the X-3 multiplier, T1, in Section 3 should also be tuned for a maximum signal at the base of Q1.

X-3 Multiplier and Power Divider. The input is supplied from the X-2 multiplier so a 2.342 MHz signal must be supplied to J10. The output of the multiplier is tuned by adjusting T2 for a peak signal at the output of T3. The filter inductors, L1, L2, and L3, are tuned for a peak 14.052 MHz output signal at T3. The two amplifiers and their associated filters are tuned for maximum output at J3, J4, J5, and the output of T6.

The input to the X-5 multiplier, T5 in Section 2, should also be tuned at this time. To do this, a jumper is placed from J5 to J12 and T5 is tuned for a maximum signal at the base of Q4.

12.646 MHz Mixer. In addition to the 2.342 MHz signal on J10, insert a 1.4052 MHz signal on J2. Tune the mixer in Section 4 with C5 and C6 for a maximum signal on the base of Q3. Tune the filter and amplifier T3, T4, T5, and T6, for a maximum at J1.

The trap composed of T7 and C19 is tuned for minimum second harmonic content at J1 using a field intensity meter as a monitoring instrument.

X-5 Multiplier. A 14.052 MHz signal is applied to J12, preferably from J5. The input to the multiplier must be tuned -- see the procedure for the X-3 multiplier above. The X-5 multiplier, Q4 in Section 2, is tuned by T6 for a maximum 70.26 MHz signal at the base of Q3 or at J11. The filters, L4, L3, and T4 and the amplifier tank, T3, are each tuned for a peak output at J11.

The power divider stages, Q1 and Q2, are tuned for maximum outputs at the base of Q1 in Section 1 and at J11.

X-2 Multiplier. If the rest of the module is tuned and operating properly, a 14.052 MHz signal will be present at the input to the X-2 multiplier, Q1 in Section 1. The multiplier tank inductor, L1, and the filter inductors, L2, L3, L4, are tuned for a maximum output at J9.

I. Module A11400

There are no variable components in this module. The tuned circuits have been tuned by component selection and should require no further tuning.

J. Module A11401

Low Frequency Mixer. Apply a 71.47 Hz signal input to J1. With phase meter, measure the phase of the signals appearing across R20 and R21 in Section 1 and adjust R10 to obtain a 90-degree phase relationship. Adjust R12 for equal signal amplitudes across R20 and R21. Remove the 71.47 Hz input and connect a 2.287 KHz input to J2. Measure phase of the two signals across R20 and R21 and adjust R32 for a 90-degree phase relationship.

Balanced Modulators. Measure the 2.287 KHz signal across R40 in Section 4 with the wave analyzer and adjust R38 for a null. Measure the 2.287 KHz signal across R36 with the wave analyzer and adjust R34 for a null. Readjust R10, R12, R32, R34, and R38 as necessary to minimize all unwanted signals in the two outputs, J3 and J4.

K. Module A11500

Power Dividers. Connect J10 and J11 to the Master Oscillator or apply a 2.342 MHz signal to J10. Terminate all the outputs with 50 ohms. Monitor all outputs with an r-f voltmeter and tune the variable capacitors in parallel with the transformers and coils in Sections 1 and 2 for

maximum outputs at J1, J3, J4, J5, J6, J7, and across R1 in Section 3. Adjust each of the variable coupling capacitors in the filters for the correct power output and repeat the tuning adjustment for maximum output. (NOTE: Transformers T4 and T5 in Section 1 are slug tuned and are to be tuned only for maximum output.)

X-5 Multiplier. Apply a 200 KHz signal to J13 in Section 4. Tune T2, L1, L2, L3, T3, and T4 for a maximum 1 MHz signal at the output of T4 or the base of Q1 in Section 5. Tune L4 for a minimum of 2 MHz signal at the output of T4.

X-2 Multiplier. With 200 KHz at J13, the input to the X-5 multiplier, a 1 MHz signal should be present at the input to the X-2 multiplier, the base of Q1 in Section 5. Tune C4, C8, and L1 for a maximum 2 MHz signal at the input to T1 in Section 3.

L. Module A11501

X-3 Multiplier. Provide a 100 KHz signal to the input of the X-3 multiplier, J1. Tune L2 in Section 2 for a maximum 300 KHz signal at the output of the filter, the junction of C11 and the wire to T1 in Section 1. All other circuits in this module are fixed tuned.

M. Module A11502

DC Amplifier Balance. Short the input to the d-c amplifier by shorting the junction of R24 and R25 to ground. Adjust the potentiometer for equal voltages at the collectors of Q3 and Q4. This should give a d-c output voltage at J2, with no load, of approximately 4 volts.

N. Module A11503

100 KHz VCO. Supply a d-c voltage of 4.0 volts to J1. Tune L2 for a peak 100 KHz output at J2.

O. Module A11600

10.44 MHz Mixer. Provide a 58.55 MHz signal to J2 and tune C1 in Section 4 for peak signal at the bases of Q1 and Q2. Add a 68.99 MHz

signal to J1 and tune C4, C8, and L1 for a peak 10.44 MHz signal at the input to T1 in Section 1.

X-4 Multiplier. Apply a 2.342 MHz signal to J4. Tune C3, C9, and L1 for a peak 9.368 MHz signal across R1 in Section 1.

1.0795 MHz Mixer. If the 10.44 MHz mixer and the X-4 multiplier are properly tuned and have the correct inputs, the proper signals should be present at the input to the 1.0795 MHz mixer. Tune C5 and L1 in Section 1 for a peak 1.0795 MHz output at J7.

494 KHz Mixer. Jumper the 1.0795 MHz signal from J7 to J3 and apply a 585.5 KHz signal to J5. In Section 3, tune C4 and L1 for a peak signal at J6.

P. Module A11601

X-6 Multiplier. Supply a 73.18 KHz signal to J5. Tune C3, C9, and L1 in Section 2 for a maximum 440 KHz signal across R1 in Section 3.

54.89 KHz Mixer. One input is derived from the X-6 multiplier and the second is a 494 KHz signal applied to J4. Tune L1 in Section 3 for a peak 54.89 KHz output at the base of Q2 in Section 4.

X-3 Multiplier. Supply an 18.297 KHz signal to J3 and tune L1 in Section 1 for a peak 54.9 KHz signal at the base of Q1 in Section 4.

Phase Detector. If the circuits described above are operating properly and have the correct inputs, two signals will be present at the inputs to the phase detector.

The potentiometer R11 is adjusted to give equal amplitude signals across the secondaries of T1 and T3.

Voltage Controlled Oscillator. Adjust R3 for -3 volts, then ground the arm of R3 with a clip lead. Apply approximately +1.75 volts to the phase detector output. Adjust the frequency of VCO (with a counter monitoring the base of Q2) to 68.997516 MHz by varying C2.

Remove counter leads from the base of Q2. Install power meter on the 10 mw output jacks and peak C10, C13, C15. Vary order of tuning and repeat. Monitor frequency with a counter. C2 may have to be readjusted. Adjust the level of the 2 mw output, J1, with C9 and set the level of the 10 mw output, J2, with R10. Balance the two outputs with the two controls until the proper outputs are reached. Repeat until all adjustments are optimally set. Remove the jumper on R3 arm and the external voltage from phase detector output.

Q. Module A11700

Tuning procedure for all VCO's is the same. The tuning of this module is very similar to the tuning of Module A11600. Use the procedure for the A11600 as a guide.

R. Module A11701

The tuning of this module is similar to that of the A11601 Module. Use the tuning procedure for the A11601 Module as a guide.

S. Module A11800

The tuning of this module is similar to that of the A11600 Module. Use the tuning procedure for the A11600 Module as a guide.

T. Module A11801

The tuning of this module is similar to that of the A11601 Module. Use the tuning procedure for the A11601 Module as a guide.

U. Module A11900

Doubler. Supply a 66.088 MHz signal to J4. Tune C2, C6 and C12 in Bay A for a peak 132.176 MHz signal at the base of Q2.

Power Amplifier. With the doubler operating properly, a 132.176 MHz signal should be present at the input to the power amplifier, transistor Q2. Tune C16 and C19 for a peak signal at the output of L7 with a 50 ohm load in lieu of the following quadrupler.

Adjust the output level to +20 dbm with C17 and retune C16 and C19 for optimum output. Retune C2, C6, C12, C16 and C19 for a maximum output at L7.

First Quadrupler. With the doubler and power amplifier operating properly a 132.176 MHz signal at a level of approximately +20 dbm should be available at the input to the first quadrupler in Bay B. Adjust C1, C2, C3, C4 and C5 for maximum signal at 528.8 MHz at the output connector.

Second Quadrupler. The 528.8 MHz signal out of the first quadrupler is used to drive the second quadrupler. Adjust A, B, and C, Figure 26, in sequence for maximum 2115 MHz signal at J1.

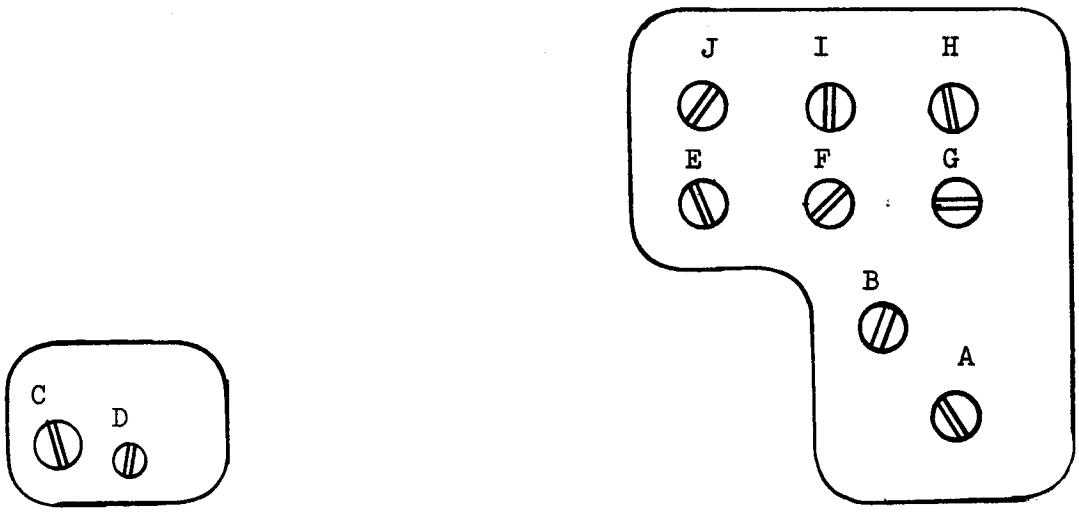

Figure 26. A11900 Tuning Adjustments

D is the diode post, do not remove. Adjustments E, F, G, H, I and J are tuning screws in a double stub tuner. These are used to optimize the output power, flatten the output power versus temperature curve and minimize spurious outputs. CAUTION - THE A11900 MODULE IS FACTORY ADJUSTED AND SHOULD BE TUNED ONLY IF ABSOLUTELY NECESSARY SUCH AS WHEN REPLACING COMPONENTS. BEFORE ATTEMPTING TUNING, BE SURE THAT THE INPUT FROM THE A11801 MODULE IS 66.088 MHz AT A POWER LEVEL OF APPROXIMATELY 10 MILLIWATTS.

1.6 Drawings

The block diagram of Figure 3 in Section 1.3.1 in conjunction with the module assembly drawings and the electrical schematic drawings given in this section provide the information needed in locating subassemblies, or components as required for the maintenance or repair of the equipment.

The module number of a given electronic function is determined from the block diagram. The functional block that this represents can then be located on the module assembly drawing. The block diagram appearing on the module assembly drawing designates through the use of hyphenated numbers which compartment in the module the functional block is located. The electrical schematic drawings which also contain the component subassemblies is keyed through the aforementioned hyphenated numbers.

1.6.1 Circuit Schematics

The circuit schematics (SK-11200 through SK-11900) enable a technician to isolate any malfunction in a module down to the particular circuit. Each schematic provides a circuit diagram and a detailed circuit layout of each subassembly. Also provided is a parts tabulation used for identification, requisitioning and storage of parts.

The description column provides a breakdown of the subassembly into its component parts. Where appropriate, the description column also includes parts description data, i.e., size, tolerance, type of material, etc. It should be noted that a ① or ② designation indicates the part value for the first or second unit, respectively. The "MFG" column includes the vendor's name. The reference designation figures key the parts breakdown to the applicable illustration. The manufacturer's part number column includes vendor code number for an

individual component. Quantities specified in the "NO REQD" column are the total number of each part required per subassembly.

1.6.2 Module Assembly

The module assembly drawings (A11200 through A11900) provide useful maintenance information giving a breakdown of the equipment into its assemblies. Jack numbers appearing on these drawings are those referenced in Maintenance, Section 1.5.

The following engineering drawings were prepared during the development phase of the Master Oscillator and Frequency Synthesizer. They are ordered as follows for easy reference:

a) Miscellaneous hardware fixtures

b) Module assembly drawings

c) Layouts and schematics for each module.

MOFS Engineering Drawing List A 11000

Drawing Number	Drawing Title
A11001	Block Diagram -- Master Oscillator Frequency Synthesizer
A11002	Master Osc. and Freq. Syn. Final Assy.
A11010	Module, Frequency Synthesizer
A11011	Cover, Module -- Frequency Synthesizer
A11012	Panel Detail -- Master Oscillator and Frequency Synthesizer (Engraving)
A11015	Bracket, Power Supply Mtg.
A11016	Bracket, Master Osc. Mtg.
A11017	Clamp, Power Supply Bracing
A11018	Clamp, Oven Bracing
A11019	Strip, Compartment Divider - 1
A11020	Strip, Power Supply Clamping
A11025	Module, Lower Section
A11028	Top Cover -- Module -- Frequency Synthesizer X32 Multiplier
A11029	Bottom Cover Module -- Frequency Synthesizer X32 Multiplier
A11031	Housing, Capacitor Mtg.
A11100	Module Assy -- A20 Variable Attenuator
A11300	Module Assy -- A6
A11301	Module Assy -- A7
A11302	Module Assy -- A8
A11303	Module Assy -- A9
A11304	Module Assy -- A10
A11305	Module Assy -- A3
A11306	Module Assy -- A5
A11307	Module Assy -- A4
A11400	Module Assy
A11401	Module Assy
A11500	Module Assy -- A1
A11501	Module Assy -- A13
A11502	Module Assy -- A12
A11503	Module Assy -- A2

MOFS Engineering Drawing List (Cont'd)

Drawing Number	Drawing Title
A11600	Module Assy -- A19 Freq. Determination No. 1-A
A11601	Module Assy -- A18
A11700	Module Assy -- A17 Freq. Determination No. 2-A
A11701	Module Assy -- A16
A11800	Module Assy -- A15 Freq. Determination No. 3-A
A11801	Module Assy -- A14
A11900	X32 Multiplier Assy
A11201	Master Oscillator
A11300-1	n/4 Divider 73.1875 KHZ - 18.297 KHZ
A11300-2	Filter 18.297 KHZ
A11300-3	Filters 73.1875 KHZ and 18.297 KHZ
A11300-4	n/8 Divider 585.5 KHZ - 73.1875 KHZ
A11300-5	Filter 18.297 KHZ
A11301-1	Frequency Divider (n/4) 2.342 MHZ - 585.5 KHZ
A11301-2	Filter 585.5 KHZ
A11301-3	Filter 585.5 KHZ and 73.1875 KHZ
A11301-4 and -5	73.187 KHZ Power Divider
A11302-1	73.187 KHZ Power Divider
A11302-2	Filter, 73.187 KHZ
A11302-3	Mixer
A11302-4	Mixer
A11302-5	Mixer
A11303-1	2.34089 MC Mixer
A11303-2	2.414079 MC Mixer
A11303-3	2.414008 MC Mixer
A11303-4	2.34082 MC Mixer
A11303-5	2.342 MC Power Divider
A11304-100	Shield, Transformer (T50-2)
A11304-1 and -3	Phase Shifter (1 - 2.2688 MC) (3 - 2.34089 MC)
A11304-2 and -4	Phase Shifter (2 - 2.34082 MC) (4 - 2.34200 MC)

MOFS Engineering Drawing List (Cont'd)

Drawing Number	Drawing Title
A11305-1	Amp. and Power Divider 2.34 MC
A11305-2	Mixer, 3.684 MC, 0.702 MC, 5.386 MC
A11305-3	Freq. Divider 2.342 MC - 468.4 KC
A11305-4	X3 Multiplier, 1.4 MC out
A11305-5	Frequency Divider, 1.405 MC - 702.6 KC
A11306-1	58.5 MC Power Divider
A11306-2	X25 Multiplier, 58.5 MC
A11306-3	Mixer, 20.8438 MHZ
A11306-4	Mixer, 19.438 MHZ
A11306-5	2.34 MC Power Divider
A11306-400 A11305-400	R.F. Shield
A11307-1	X2 Multiplier 140 MHZ
A11307-2	X5 Multiplier 70.26 MC
A11307-3	X3 Multiplier 14 MC
A11307-4	Mixer
A11307-5	Power Divider
A11307-200	R. F. Shield
A11307-300	R. F. Shield
A11400-1	Divider
A11400-2	Divider
A11400-3	Divider
A11400-4	Divider
A11400-5	Divider
A11400-6	Divider
A11401-1	Low Frequency Mixer
A11401-2 A11401-3	Divide by 2 and Filter Amp. 2.216 KC in - 1.108 KC out 2.358 KC in - 1.179 KC out
A11401-4	Low Frequency Mixer
A11401-5 and -6	Filter Amp. 2.216 KC and 2.318 KC

MOFS Engineering Drawing List (Cont'd)

Drawing Number	Drawing Title
A11500-1	2.342 MHZ Power Divider
A11500-2	2.342 MHZ Power Divider
A11500-3	Mixer 34.2 KHZ
A11500-4	x 5 Mul. 1 MHZ
A11500-5	Driver Amp. x2 1 MHZ to 2 MHZ
A11501-1	Mixer, KHZ
A11501-2	x 3 Mul. 300 KHZ
A11501-3	x2 Multiplier
A11501-4	Sweep Circuit
A11502-1	x2 Mul. 40 KHZ
A11502-2	x 2 Mul. 20 KHZ
A11502-3	x 5 Mul. 10 KHZ
A11502-4	Mixer 2 KHZ
A11502-5	20 KC Phase Detector and D.C. Amplifier
A11503-1	Divide by 5 20 KC Divider
A11503-2	Filter Amp.
A11503-3	Amplifier
A11503-4	Amplifier
A11503-5	VCO and Amplifier
A11600-1	Mixer, 1.0795 MHZ
A11600-2	x 4 Mul.
A11600-3	Mixer, .494 MHZ
A11600-4	Mixer, 10.44 MHZ
A11601-1	x 3 Mul., 54.9 KHZ
A11601-2	x 6 Mul., 440 KHZ
A11601-3	Mixer, 54.89 KHZ
A11601-4	54 KC Ø Detector
A11601-5	68.997515 MC VCO
A11700-1	Mixer, .29275 MHZ
A11700-2	x 5 Mul., 11.7 MHZ

MOFS Engineering Drawing List (Cont'd)

Drawing Number	Drawing Title
A11700-2	x 5 Mul., 11.7 MHZ
A11700-3	Mixer, .8785 MHZ
A11700-4	Mixer, 12.588 MHZ
A11701-1	x 3 Mul., 220 KHZ
A11701-2	Mixer, 73.1875 KHZ
A11701-3	73 KC Phase Detector
A11701-4	71.138250 MC VCO
A11800-1	x 2 Mul., 4.686 MHZ
A11800-2	Mixer, 2.854 MHZ
A11800-3	Mixer, 7.53 MHZ
A11800-4	Mixer, .5123 MHZ
A11800-5	2.342 MHZ Power Amplifier
A11801-1	Module Compartment
A11801-2	x 6 Mul., 440 KHZ
A11801-3	73 KC Phase Detector
A11801-4	66.088312 MC VCO
A11900-1	x2/Power Amp./x4, 66 MHZ - 528.8 MHZ
A11902-A	Ferrite Isolator

Drawing Number A-11001 is Figure 3, page 10, of the text.

SK | CHG LTR

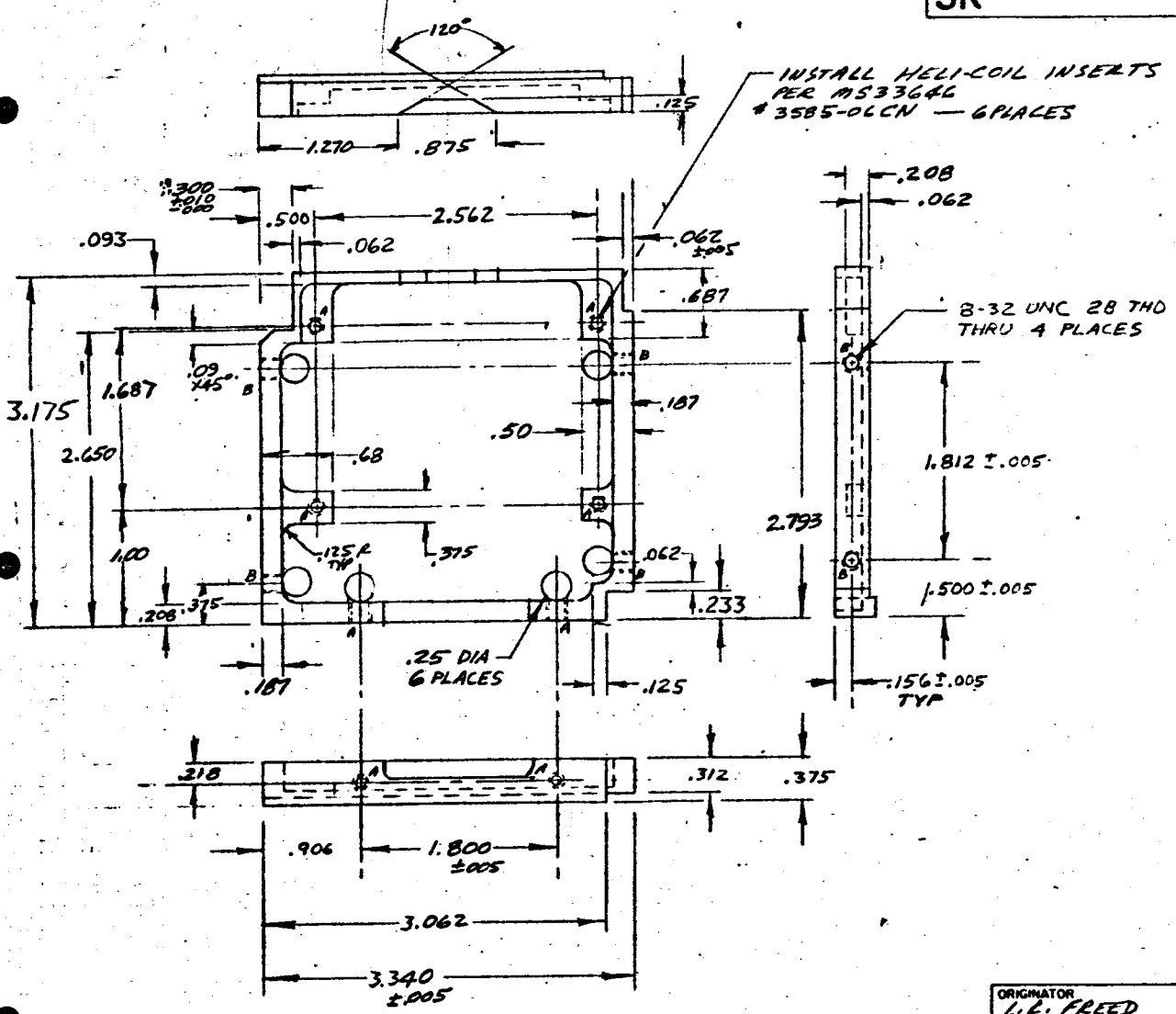

6061-T6 ALUM

ORIGINATOR	DATE	TITLE	ENGINEERING SKETCH
L. L. FREED	10-16-63	BRACKET, MASTER OSC. MTG.	SPACE TECHNOLOGY LABORATORIES, INC. LOS ANGELES, CALIFORNIA
			A-11016
MJO			SHEET OF

STL Form 5238 (Rev. 2-59)

SK A-11017 CHG LTR

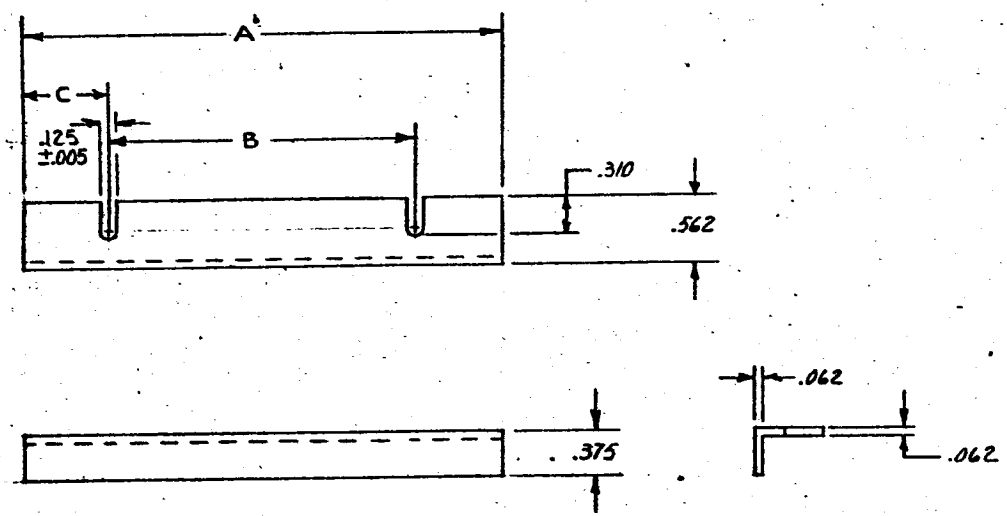

TABULATION BOX			
DASH NO.	DIMENSION		
	A	B	C
-1	4.00	2.562±.005	.718
-2	3.25	1.687±.005	.750

NOTE: MATERIAL. ALUMINUM ANGLE

ORIGINATOR	DATE	TITLE	ENGINEERING SKETCH
LARRY PRICE	12/9/63	CLAMP, POWER SUPPLY BRACING	SPACE TECHNOLOGY LABORATORIES, INC. LOS ANGELES, CALIFORNIA
			SK A-11017
MJO			SHEET OF

STL Form 523B (Rev. 2-59)

88

SK | CHG LTR

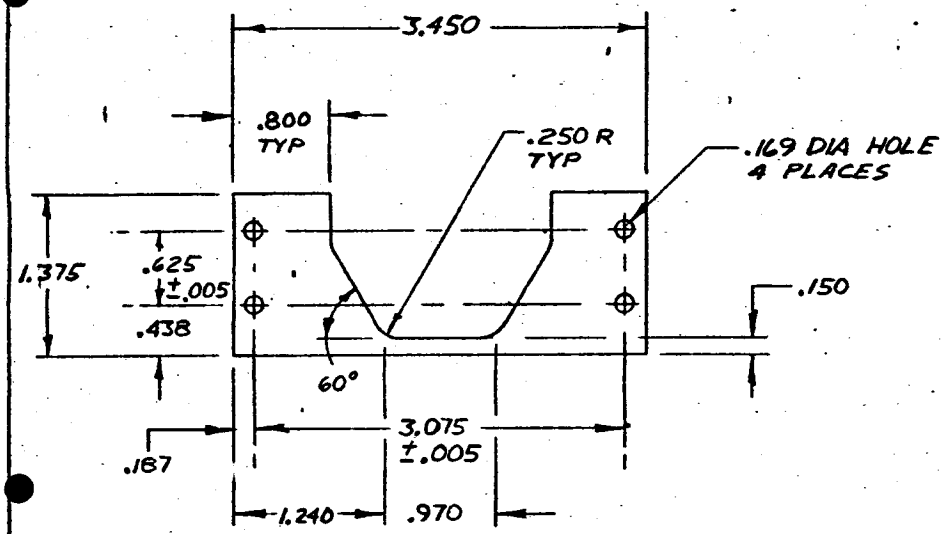

NO REQD	MRR OR STL PART NO	PART NO.	DESCRIPTION	SYM
			.09 X 1.37 X 3.45 6061-T6 AL ALY	

ORIGINATOR	DATE	TITLE
L. L. FREED	10-15-63	CLAMP, OVEN BRACING
MJO		

ENGINEERING SKETCH
SPACE TECHNOLOGY LABORATORIES, INC.
LOS ANGELES, CALIFORNIA

SK A-11018

SHEET OF

STL Form 5238 (Rev. 2-59)

68

X214368 A

REVISIONS						
ZONE	SYM	DESCRIPTION	BY	DATE	CK'D	APPROVAL
		100 ±.005 WAS .160 ±.005				

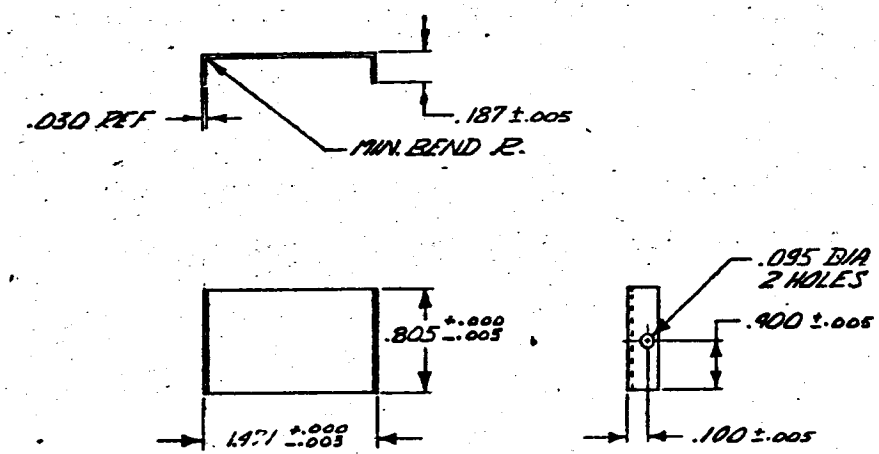

QTY REQD	PART NO.	PART NAME	STOCK	MATERIAL	SPEC	CODE IDENT	ZONE	ITEM NO.	USED ON	NEXT ASSY	NEXT ASSY	FINAL ASSY
	-1	STRIP	.03 SHT	6061-T6 AL ALY	QQ-A-287a					X214316		
			DESCRIPTION						APPLICATION		QTY REQD	

LIST OF MATERIALS

UNLESS OTHERWISE SPECIFIED

DIMENSIONS IN INCHES
TOLERANCES .XXX = ±.010
.XX = ±.03
.X = ±.1
ANGLES ±0° 30'

REMOVE BURRS & SHARP EDGES
DIMENSIONING & TOLERANCING PER MIL-STD-8
SURFACE ROUGHNESS PER MIL-STD-10 ✓
THREADS PER MIL-STD-8, MIL-S-7742 & MIL-P-7105
RIVET CODING PER NAS 523
WELD SYMBOLS PER JAN-STD-19
STD HOLE TOLERANCES PER AND 10387
ELECTRICAL & ELECTRONIC SYMBOLS & REFERENCE DESIGNATIONS PER MIL-STD-15 & MIL-STD-16

FINISH
ELECTROLESS NICKLE .001 THK PER STL. SPEC P6-3

HEAT TREAT

DO NOT SCALE DRAWING

THE FOLLOWING E.O.'S HAVE BEEN ATTACHED TO THIS PRINT

STL APPROVALS

DRAWN	J. HARRIS	8-28-63
CHECKED		
STRUCTURES		
MAT'LS & PROCESSES		
LEAD ENGR		
SUPERVISION		
SPECIAL		
OTHER APPROVALS		

SPACE TECHNOLOGY LABORATORIES, INC.
LOS ANGELES 45, CALIFORNIA

STRIP, COMPARTMENT DIVIDER -1

CODE IDENT NO. 11982 | DWG SIZE B | A-11019

SCALE 1/1 | WEIGHT | SHEET 1 OF 1

P6-3
APPLICABLE SPECIFICATIONS
THE ABOVE REFERENCED STL SPECS FORM A PART OF THIS DRAWING.

MJ04126-01-01

STL FORM 14318

DIETERICH-POST CLEARPRINT 1029

SK A-11020 | CHG LTR

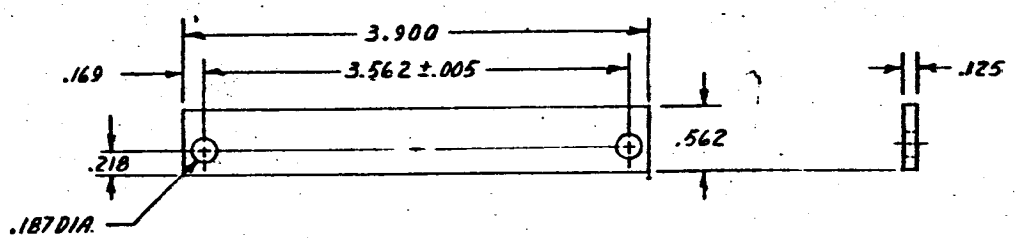

NOTE: MATERIAL 2024-T3 ALUMINUM STRIP

ORIGINATOR	DATE	TITLE	ENGINEERING SKETCH
LARRY PRICE	12/9/63	STRIP, POWER SUPPLY CLAMPING	SPACE TECHNOLOGY LABORATORIES, INC. LOS ANGELES, CALIFORNIA
			SK A-11020
MJO			SHEET OF

STL Form 523B (Rev. 2-59)

SK | CHG LTR

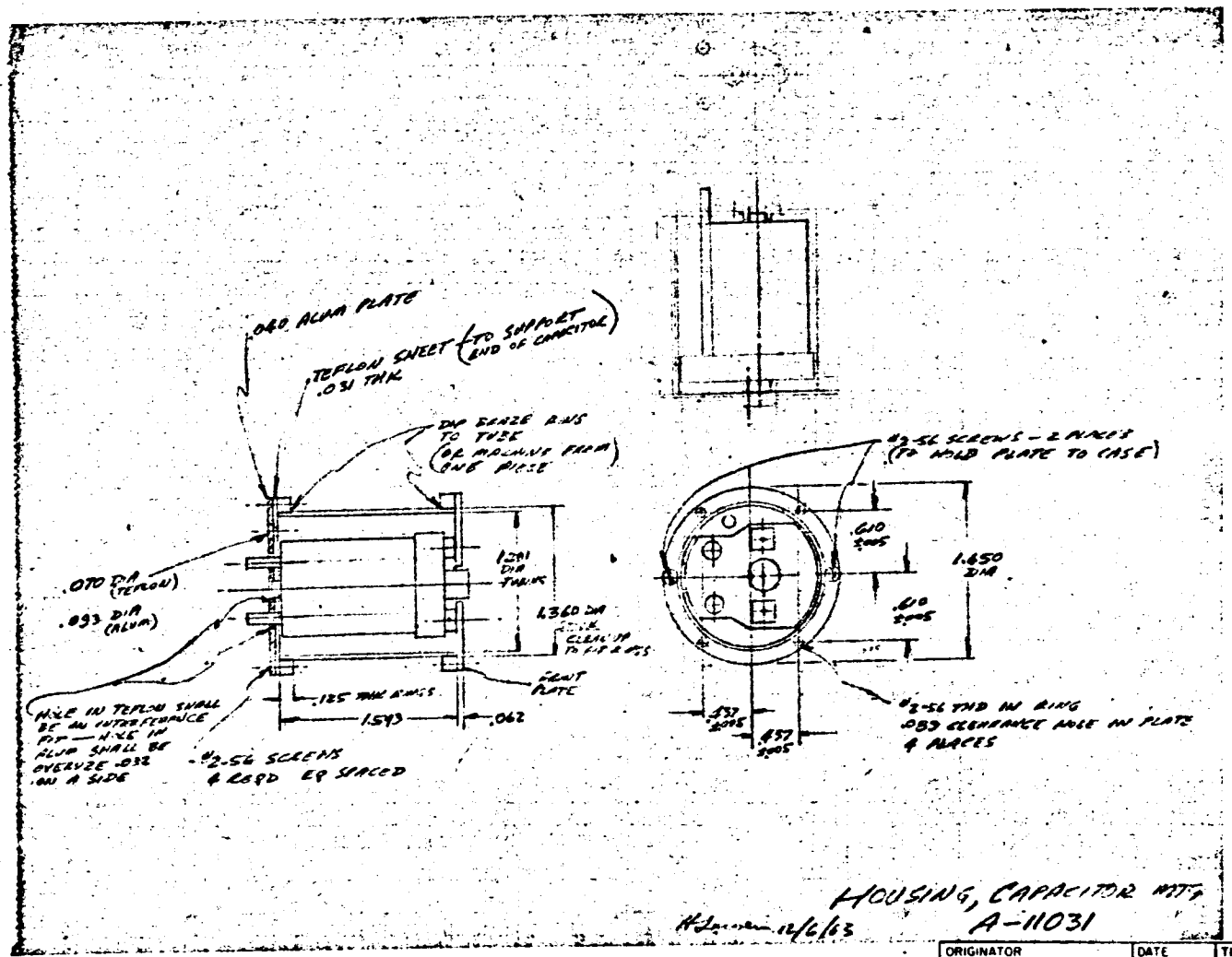

HOUSING, CAPACITOR MTG
A-11031

H. Jensen 12/6/63

ORIGINATOR	DATE	TITLE	ENGINEERING SKETCH
		HOUSING, CAPACITOR MTG	SPACE TECHNOLOGY LABORATORIES, INC. LOS ANGELES, CALIFORNIA
			SK A-11031
MJO			SHEET OF

STL Form 5238 Rev 2 59

SK

CHG LTR

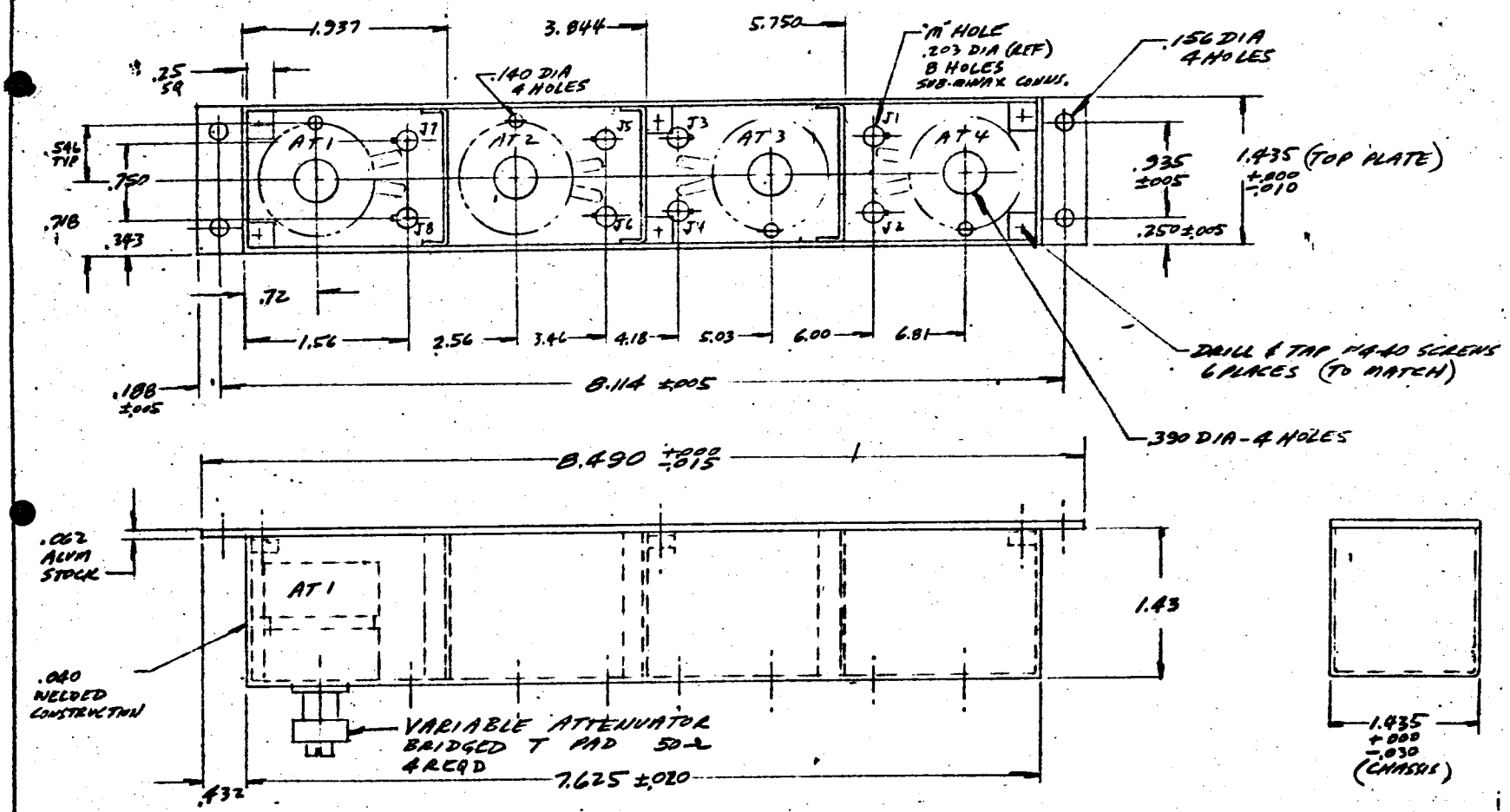

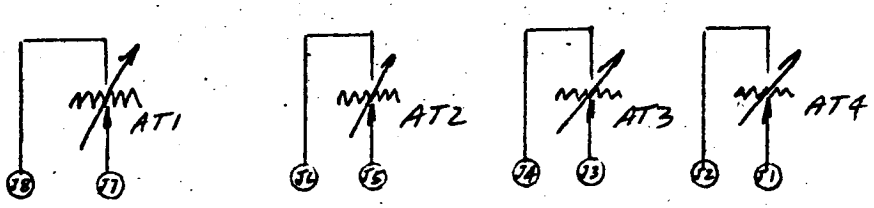

ORIGINATOR	DATE	TITLE	ENGINEERING SKETCH
H.L.	12/11	MODULE ASSY-A20 VARIABLE ATTENUATOR	SPACE TECHNOLOGY LABORATORIES, INC. LOS ANGELES, CALIFORNIA
MJO			SK A-11100
			SHEET 1 OF 1

STL Form 5238 (Rev. 2-59)

REVISIONS						
ZONE	SYM	DESCRIPTION	BY	DATE	CK'D	APPROVAL
	A	ADDED -5 COMP.				

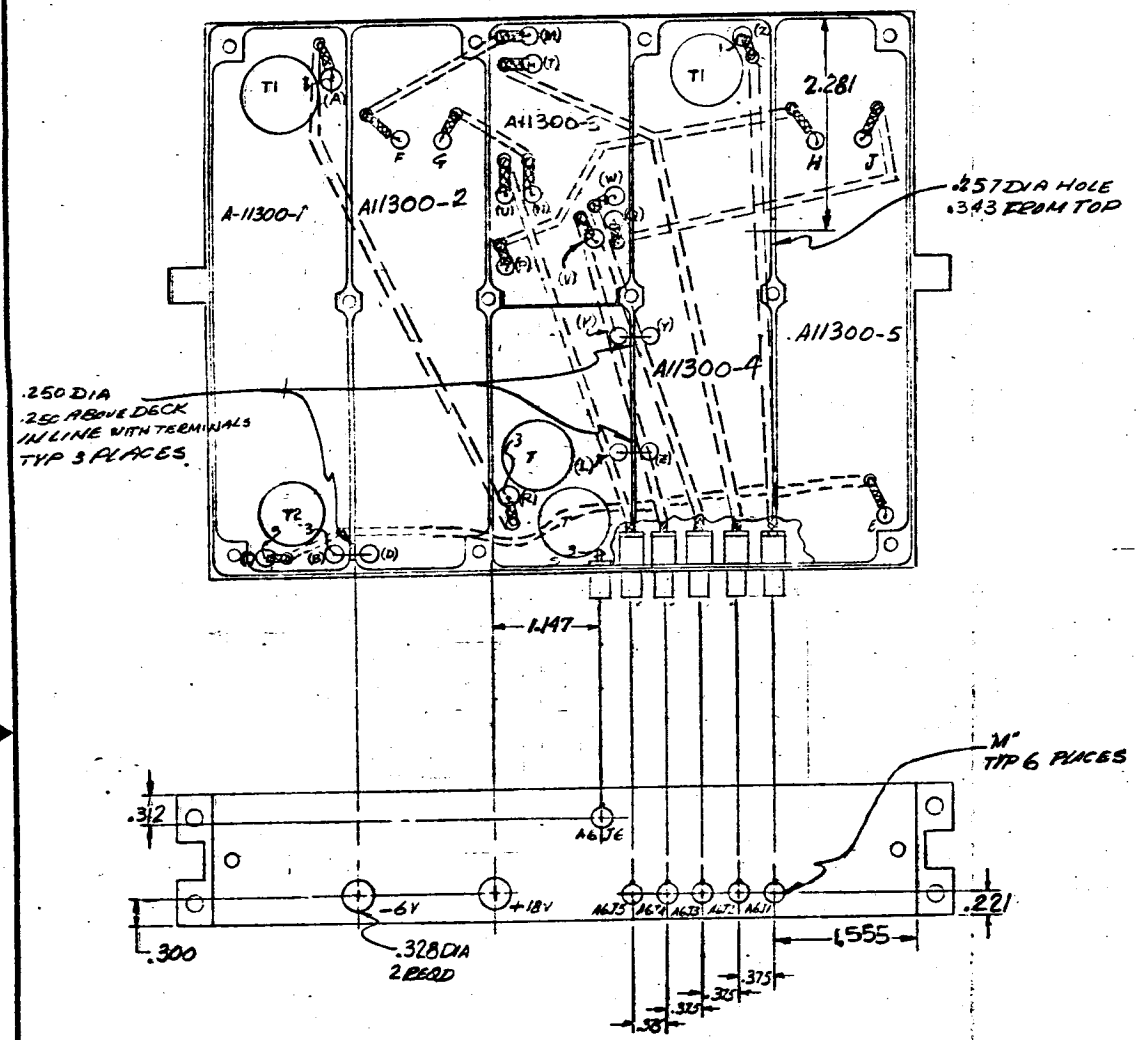

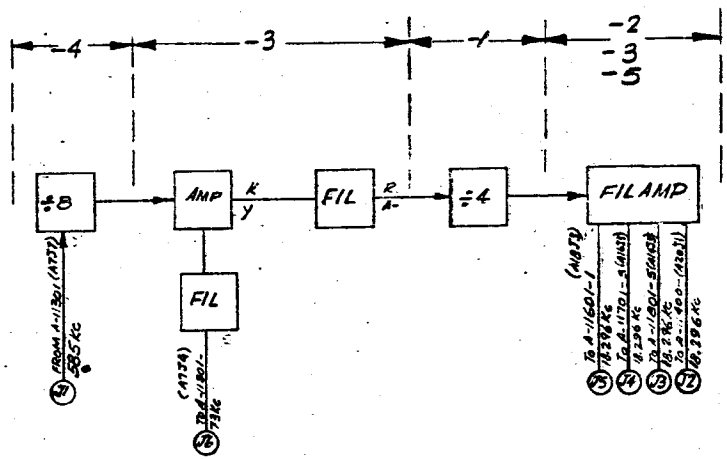

A-11300

A

QTY REQD	PART NO.	PART NAME	STOCK	MATERIAL	SPEC	CODE IDENT	ZONE	ITEM NO.	USED ON	NEXT ASSY	NEXT ASSY	FINAL ASSY
			DESCRIPTION						APPLICATION		QTY REQD	

LIST OF MATERIALS

UNLESS OTHERWISE SPECIFIED

DIMENSIONS IN INCHES
TOLERANCES .XXX = ± .010
.XX = ± .030
.X = ± .1
ANGLES ± 0° 30'

REMOVE BURRS & SHARP EDGES
DIMENSIONING & TOLERANCING PER MIL-STD-8
SURFACE ROUGHNESS PER MIL-STD-10 ✓
THREADS PER MIL-STD-8, MIL-S-7742 & MIL-F-7105
RIVET CODING PER NAS 523
WELD SYMBOLS PER JAN-STD-19
STD HOLE TOLERANCES PER AND 10387
ELECTRICAL & ELECTRONIC SYMBOLS & REFERENCE DESIGNATIONS PER MIL STD-15 & MIL-STD-16

FINISH

HEAT TREAT

DO NOT SCALE DRAWING

STL APPROVALS

DRAWN	
CHECKED	
STRUCTURES	
MAT'LS & PROCESSES	
LEAD ENGR	
SUPERVISION	
SPECIAL	
OTHER APPROVALS	

THE FOLLOWING E.O.'S HAVE BEEN ATTACHED TO THIS PRINT

SPACE TECHNOLOGY LABORATORIES, INC.
LOS ANGELES 45, CALIFORNIA

MODULE ASSY-A6

CODE IDENT NO. 11982

SIZE C

A11300

SCALE

WEIGHT

SHEET

STL FORM 1-56C

DIETERICH-POST CLEARPRINT 1020

REVISIONS						
ZONE	SYM	DESCRIPTION	BY	DATE	CK'D	APPROVAL

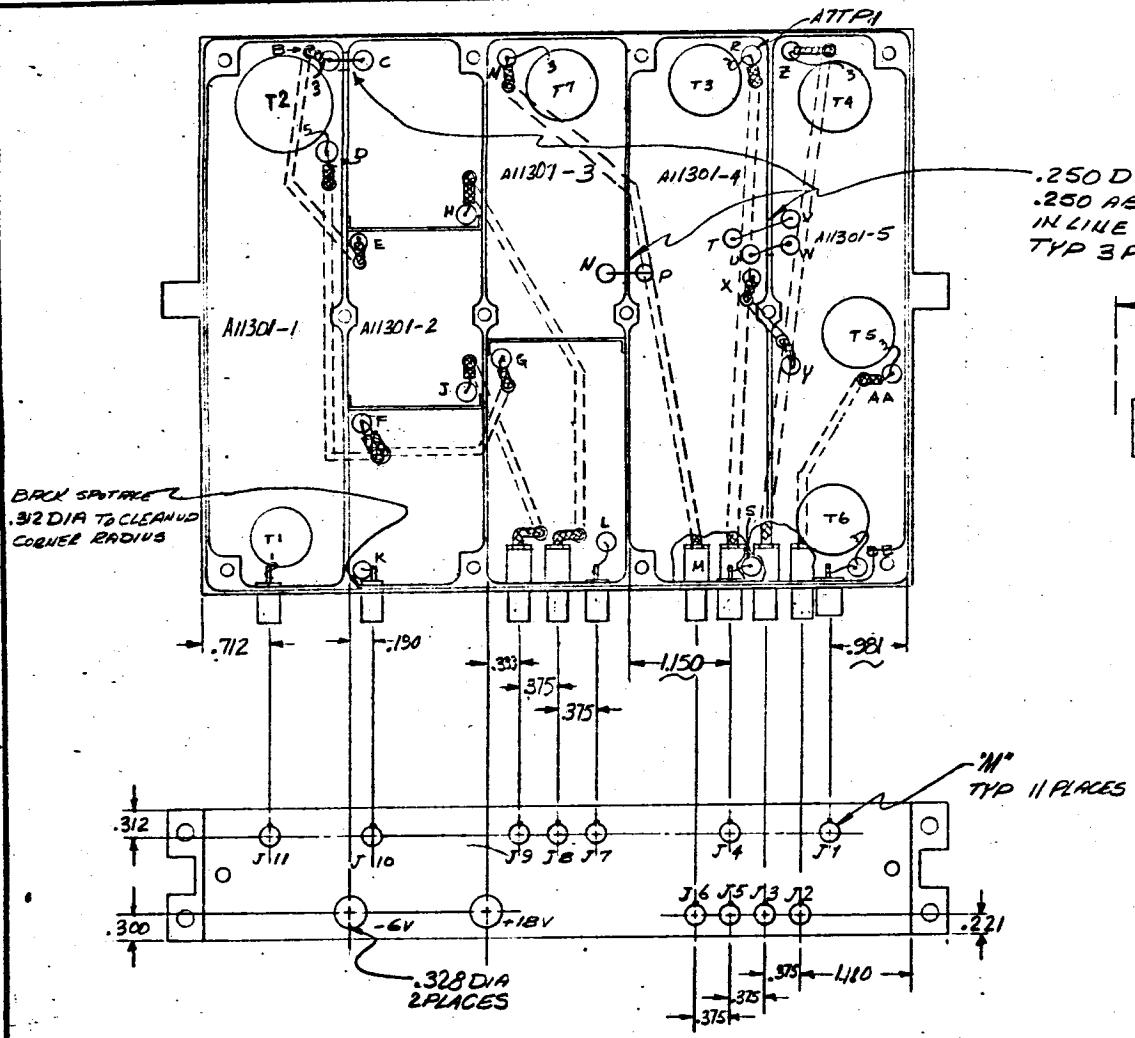

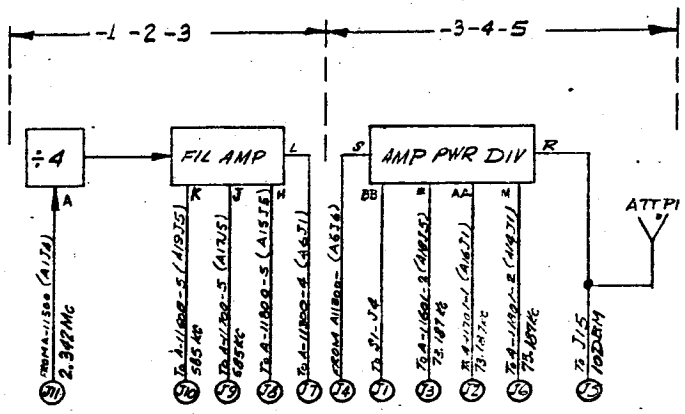

A-11301

QTY REQD	PART NO.	PART NAME	STOCK	MATERIAL / DESCRIPTION	SPEC	CODE IDENT	ZONE	ITEM NO.	USED ON	NEXT ASSY	NEXT ASSY	FINAL ASSY
									APPLICATION		QTY REQD	

LIST OF MATERIALS

UNLESS OTHERWISE SPECIFIED

DIMENSIONS IN INCHES
TOLERANCES .XXX = ±.010
.XX = ±.03
.X = ±.1
ANGLES ±0° 30'

REMOVE BURRS & SHARP EDGES
DIMENSIONING & TOLERANCING PER MIL-STD-8
SURFACE ROUGHNESS PER MIL-STD-10 ✓
THREADS PER MIL-STD-9, MIL-S-7742 & MIL-P-7105
RIVET CODING PER NAS 523
WELD SYMBOLS PER JAN-STD-19
STD HOLE TOLERANCES PER AND 10387
ELECTRICAL & ELECTRONIC SYMBOLS & REFERENCE DESIGNATIONS PER MIL-STD-15 & MIL-STD-16.

FINISH

HEAT TREAT

DO NOT SCALE DRAWING

THE FOLLOWING E.O.'S HAVE BEEN ATTACHED TO THIS PRINT

STL APPROVALS: DRAWN, CHECKED, STRUCTURES, MAT'LS & PROCESSES, LEAD ENGR, SUPERVISION, SPECIAL, OTHER APPROVALS

SPACE TECHNOLOGY LABORATORIES, INC.
LOS ANGELES 45, CALIFORNIA

MODULE ASSY—A7

CODE IDENT NO. 11982 | DWG SIZE C | A11301

SCALE | WEIGHT | SHEET

REVISIONS					
ZONE	SYM	DESCRIPTION	BY	DATE	CK'D	APPROVAL

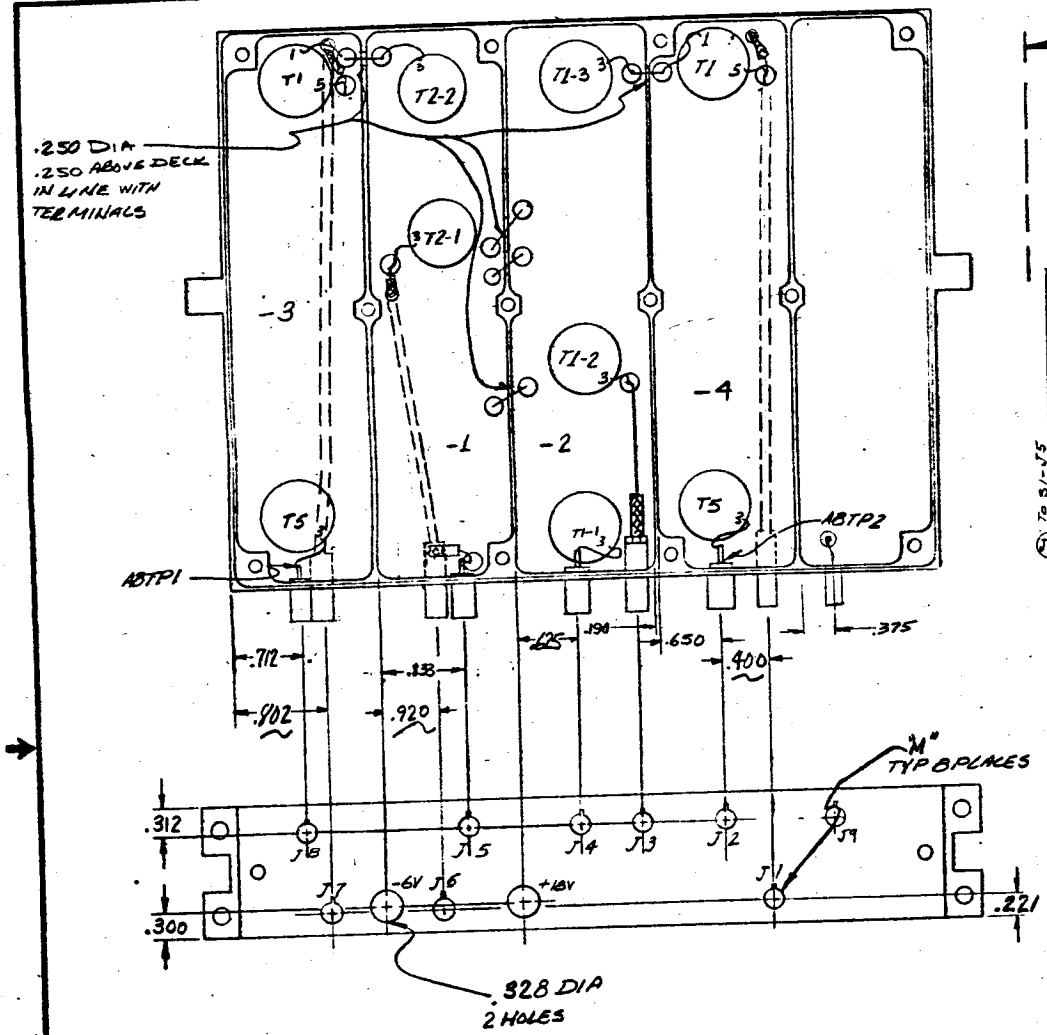

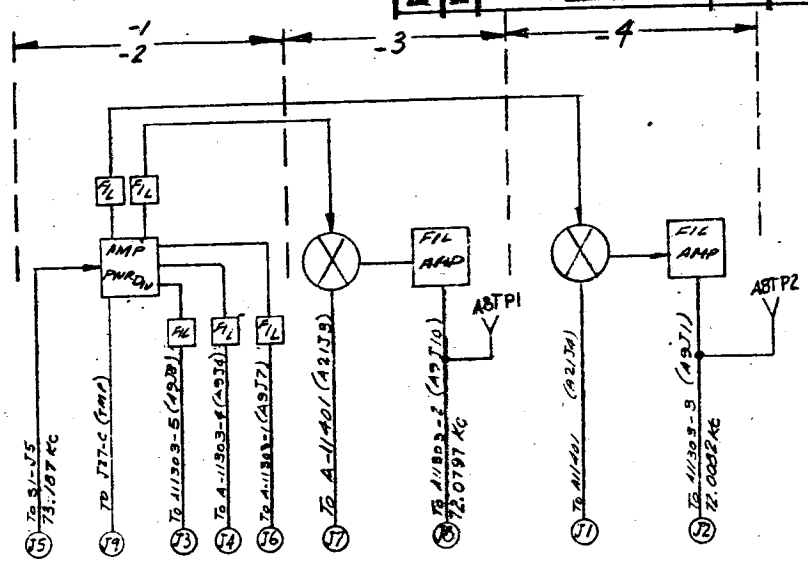

A-11302

QTY REQD	PART NO.	PART NAME	STOCK	MATERIAL	SPEC	CODE IDENT	ZONE	ITEM NO.	USED ON	NEXT ASSY	NEXT ASSY	FINAL ASSY
			DESCRIPTION						APPLICATION		QTY REQD	

LIST OF MATERIALS

UNLESS OTHERWISE SPECIFIED

DIMENSIONS IN INCHES
TOLERANCES .XXX = ±.010
.XX = ±.03
.X = ±.1
ANGLES ±0° 30'

REMOVE BURRS & SHARP EDGES
DIMENSIONING & TOLERANCING PER MIL-STD-8
SURFACE ROUGHNESS PER MIL-STD-10 ✓
THREADS PER MIL-STD-9, MIL-S-7742 & MIL-P-7105
RIVET CODING PER NAS 523
WELD SYMBOLS PER JAN-STD-19
STD HOLE TOLERANCES PER AND 10387
ELECTRICAL & ELECTRONIC SYMBOLS & REFERENCE DESIGNATIONS PER MIL-STD-15 & MIL-STD-16

FINISH

HEAT TREAT

DO NOT SCALE DRAWING

STL APPROVALS

DRAWN	
CHECKED	
STRUCTURES	
MAT'LS & PROCESSES	
LEAD ENGR	
SUPERVISION	
SPECIAL	
OTHER APPROVALS	

THE FOLLOWING E.O.'S HAVE BEEN ATTACHED TO THIS PRINT

SPACE TECHNOLOGY LABORATORIES, INC.
LOS ANGELES 45, CALIFORNIA

MODULE ASSY-A8

CODE IDENT NO.	DWG SIZE	
11982	C	A11302

SCALE | WEIGHT | SHEET

STL FORM 1441C

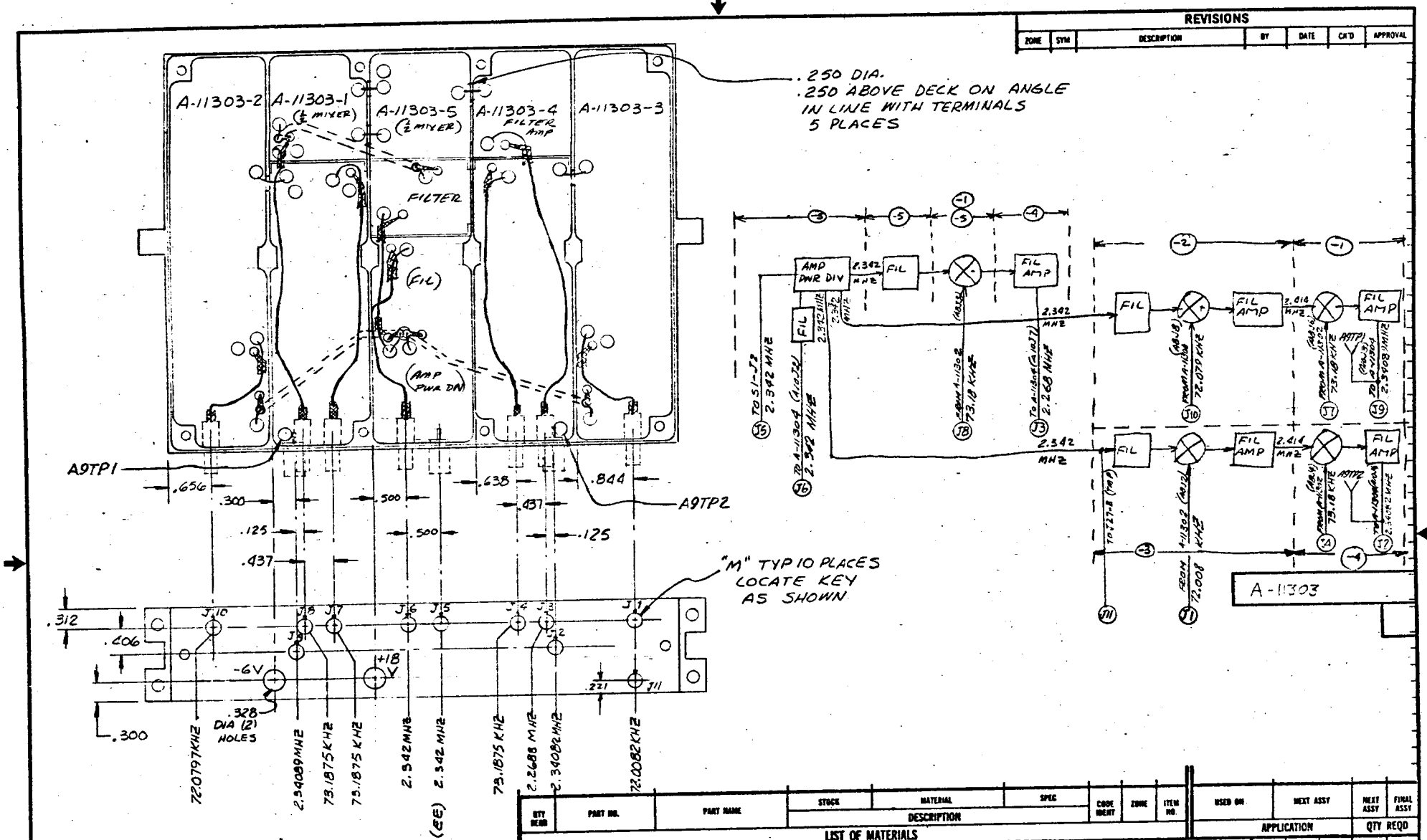

QTY REQD	PART NO.	PART NAME	STOCK	MATERIAL	SPEC	CODE IDENT	ZONE	ITEM NO.	USED ON	NEXT ASSY	NEXT ASSY	FINAL ASSY
			DESCRIPTION						APPLICATION		QTY REQD	

LIST OF MATERIALS

UNLESS OTHERWISE SPECIFIED

DIMENSIONS IN INCHES
TOLERANCES .XXX = ±.010
.XX = ±.03
.X = ±.1
ANGLES ±0° 30'

REMOVE BURRS & SHARP EDGES
DIMENSIONING & TOLERANCING PER MIL-STD-8
SURFACE ROUGHNESS PER MIL-STD-10 ✓
THREADS PER MIL-STD-9, MIL-S-7742 & MIL-P-7105
RIVET CODING PER NAS 523
WELD SYMBOLS PER JAN-STD-19
STD HOLE TOLERANCES PER AND 10387
ELECTRICAL & ELECTRONIC SYMBOLS & REFERENCE DESIGNATIONS PER MIL STD-15 & MIL STD 16

FINISH

HEAT TREAT

DO NOT SCALE DRAWING

STL APPROVALS

DRAWN	Hawse	10/25/63
CHECKED	VA	
STRUCTURES		
MAT'LS & PROCESSES		
LEAD ENGR		
SUPERVISION		
SPECIAL		
OTHER APPROVALS		

THE FOLLOWING E.O.'S HAVE BEEN ATTACHED TO THIS PRINT

SPACE TECHNOLOGY LABORATORIES, INC.
LOS ANGELES 45, CALIFORNIA

MODULE ASSY-A9

CODE IDENT NO. 11982 | DWG SIZE C | A-11303

SCALE | WEIGHT | SHEET

STL FORM 1410C

DIETERICH-POST CLEARPRINT 1020

REVISIONS						
ZONE	SYM	DESCRIPTION	BY	DATE	CK'D	APPROVAL

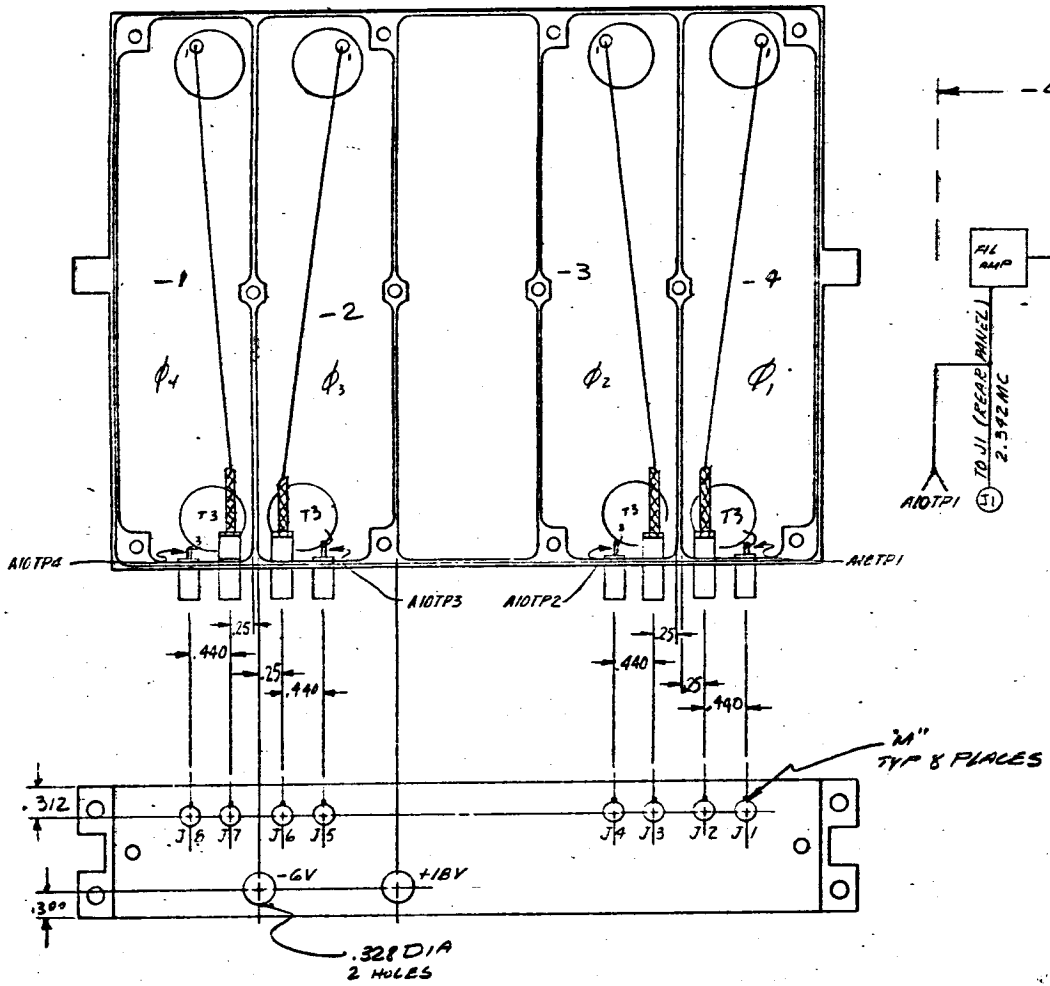

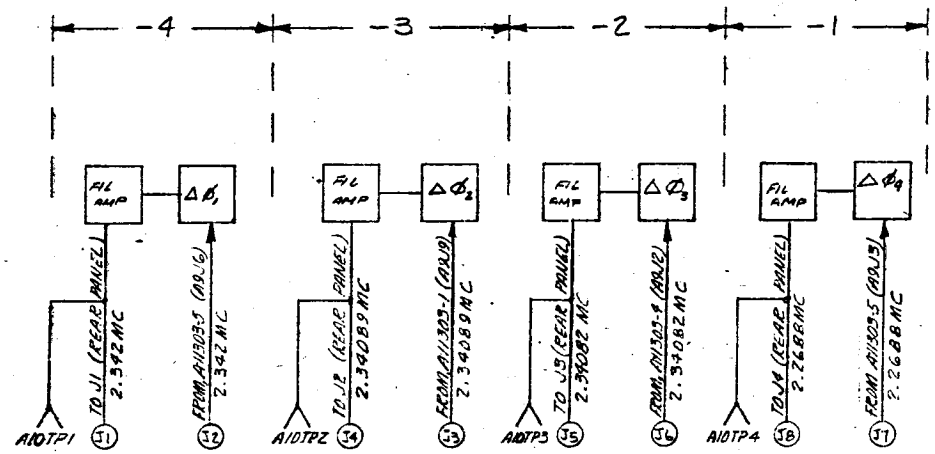

A-11304

QTY REQD	PART NO.	PART NAME	STOCK	MATERIAL	SPEC	CODE IDENT	ZONE	ITEM NO.	USED ON	NEXT ASSY	NEXT ASSY	FINAL ASSY
			DESCRIPTION						APPLICATION		QTY REQD	

LIST OF MATERIALS

UNLESS OTHERWISE SPECIFIED

DIMENSIONS IN INCHES
TOLERANCES .XXX = ±.010
.XX = ±.03
.X = ±.1
ANGLES ±0° 30'

REMOVE BURRS & SHARP EDGES

DIMENSIONING & TOLERANCING PER MIL-STD-8

SURFACE ROUGHNESS PER MIL-STD-10 ✓

THREADS PER MIL-STD-8, MIL-S-7742 & MIL-P-7105

RIVET CODING PER NAS 523

WELD SYMBOLS PER JAN-STD-19

STD HOLE TOLERANCES PER AND 10387

ELECTRICAL & ELECTRONIC SYMBOLS & REFERENCE DESIGNATIONS PER MIL-STD-15 & MIL-STD-16

FINISH

HEAT TREAT

DO NOT SCALE DRAWING

THE FOLLOWING E.O.'S HAVE BEEN ATTACHED TO THIS PRINT

STL APPROVALS

DRAWN

CHECKED

STRUCTURES

MAT'LS & PROCESSES

LEAD ENGR

SUPERVISION

SPECIAL

OTHER APPROVALS

SPACE TECHNOLOGY LABORATORIES, INC.
LOS ANGELES 45, CALIFORNIA

MODULE ASSY-A10

CODE IDENT NO.	DWG SIZE	
11982	C	A11304

SCALE | WEIGHT | SHEET

STL FORM 1461C

REVISIONS						
ZONE	SYM	DESCRIPTION	BY	DATE	CK'D	APPROVAL

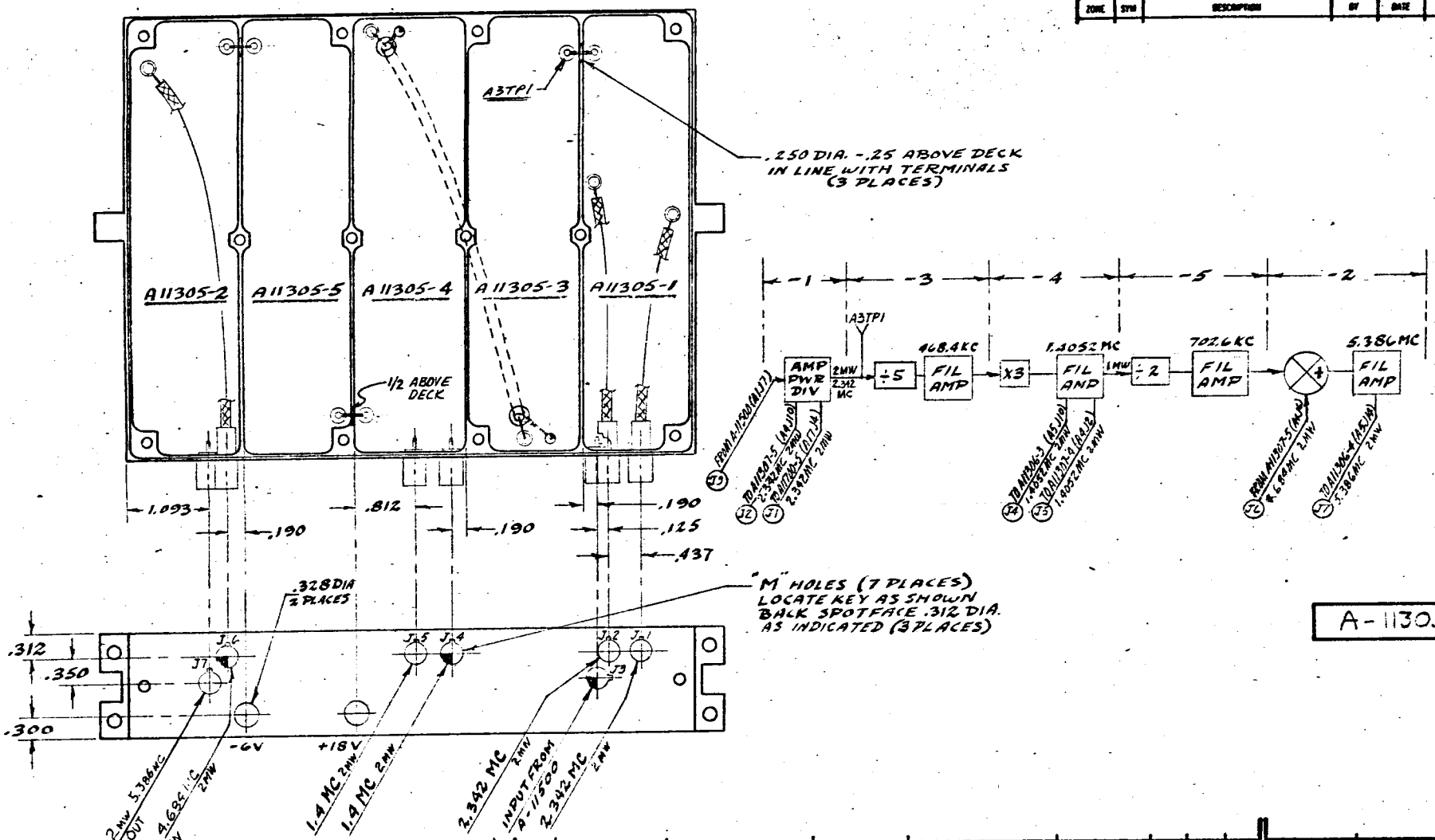

A-11305

QTY REQD	PART NO.	PART NAME	STOCK / MATERIAL / SPEC — DESCRIPTION	CODE IDENT	ZONE	ENGR NO.	USED ON	NEXT ASSY	NEXT ASSY	FINAL ASSY
							APPLICATION		QTY REQD	

LIST OF MATERIALS

UNLESS OTHERWISE SPECIFIED

DIMENSIONS IN INCHES
TOLERANCES .XXX = ±.010
.XX = ±.03
.X = ±.1
ANGLES ±0° 30'

REMOVE BURRS & SHARP EDGES
DIMENSIONING & TOLERANCING PER MIL-STD-8
SURFACE ROUGHNESS PER MIL-STD-10 ✓
THREADS PER MIL-STD-8, MIL-S-7742 & MIL-P-7105
RIVET CODING PER NAS 523
WELD SYMBOLS PER JAN-STD-19
STD HOLE TOLERANCES PER AND 10387
ELECTRICAL & ELECTRONIC SYMBOLS & REFERENCE DESIGNATIONS PER MIL-STD-15 & MIL-STD-16

FINISH

HEAT TREAT

DO NOT SCALE DRAWING

THE FOLLOWING E.O.'S HAVE BEEN ATTACHED TO THIS PRINT

STL APPROVALS: DRAWN, CHECKED, STRUCTURES, MAT'LS & PROCESSES, LEAD ENGR, SUPERVISION, SPECIAL, OTHER APPROVALS

SPACE TECHNOLOGY LABORATORIES, INC.
LOS ANGELES 45, CALIFORNIA

MODULE ASSY-A3

CODE IDENT NO. 11982 | ENG SIZE C | A-11305

SCALE | WEIGHT | SHEET

STL FORM 1466C

SHEETCHOPOST CLEARPRINT 1020

REVISIONS						
ZONE	SYM	DESCRIPTION	BY	DATE	CK'D	APPROVAL

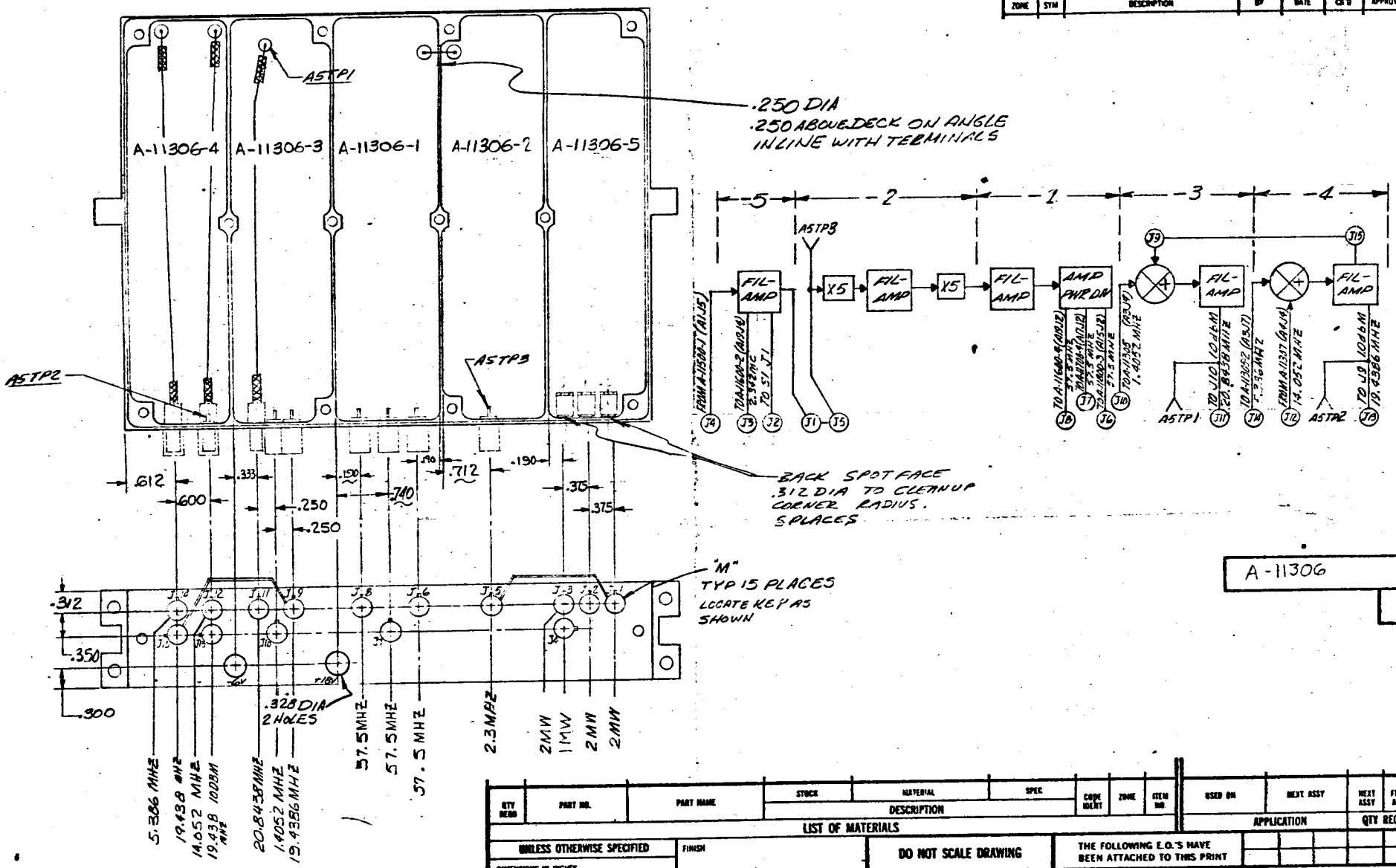

A-11306

QTY REQD	PART NO.	PART NAME	STOCK	MATERIAL	SPEC	CODE IDENT	ZONE	ITEM NO.	USED ON	NEXT ASSY	NEXT ASSY	FINAL ASSY
			DESCRIPTION						APPLICATION		QTY REQD	

LIST OF MATERIALS

UNLESS OTHERWISE SPECIFIED

DIMENSIONS IN INCHES
TOLERANCES .XXX = ±.010
.XX = ±.03
.X = ±.1
ANGLES ±0° 30'

REMOVE BURRS & SHARP EDGES
DIMENSIONING & TOLERANCING PER MIL-STD-8
SURFACE ROUGHNESS PER MIL-STD-10 ✓
THREADS PER MIL-STD-9, MIL-S-7742 & MIL-P-7105
RIVET CODING PER NAS 523
WELD SYMBOLS PER JAN-STD-19
STD HOLE TOLERANCES PER AND 10387
ELECTRICAL & ELECTRONIC SYMBOLS & REFERENCE DESIGNATIONS PER MIL-STD-15 & MIL-STD-16

FINISH

HEAT TREAT

DO NOT SCALE DRAWING

STL APPROVALS

DRAWN	
CHECKED	
STRUCTURES	
MAT'LS & PROCESSES	
LEAD ENGR	
SUPERVISION	
SPECIAL	
OTHER APPROVALS	

THE FOLLOWING E.O.'S HAVE BEEN ATTACHED TO THIS PRINT

SPACE TECHNOLOGY LABORATORIES, INC.
LOS ANGELES 45, CALIFORNIA

MODULE ASSY-A5

CODE IDENT NO.	DWG SIZE	
11982	C	A-11306

SCALE | WEIGHT | SHEET

STL FORM 1451C

REVISIONS						
ZONE	SYM	DESCRIPTION	BY	DATE	CK'D	APPROVAL

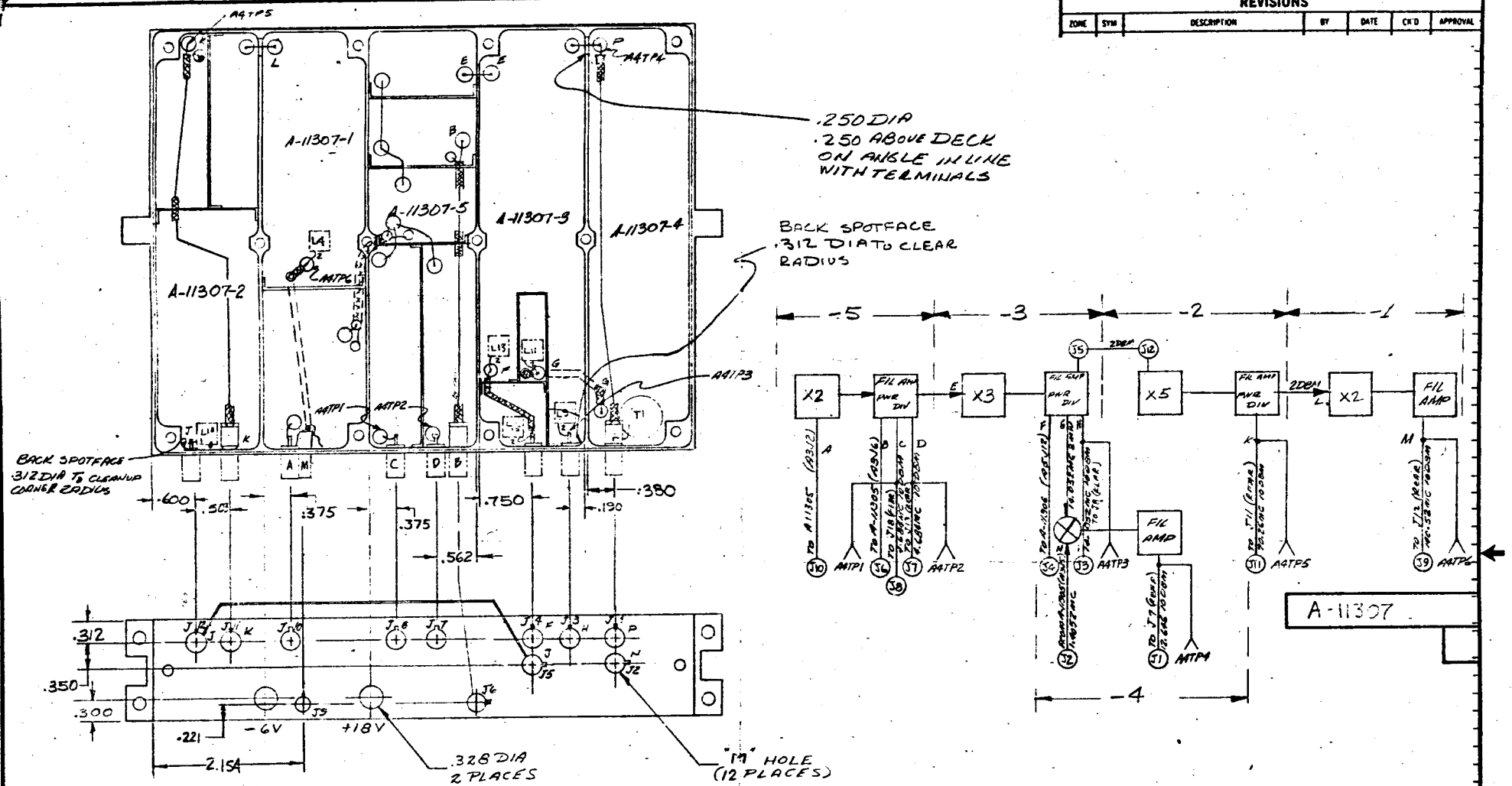

QTY REQD	PART NO.	PART NAME	STOCK	MATERIAL	SPEC	CODE IDENT	ZONE	ITEM NO.	USED ON	NEXT ASSY	NEXT ASSY	FINAL ASSY
			DESCRIPTION						APPLICATION		QTY REQD	

LIST OF MATERIALS

UNLESS OTHERWISE SPECIFIED

DIMENSIONS IN INCHES
TOLERANCES .XXX = ±.010
.XX = ±.03
.X = ±.1
ANGLES ±0° 30'

REMOVE BURRS & SHARP EDGES
DIMENSIONING & TOLERANCING PER MIL-STD-8
SURFACE ROUGHNESS PER MIL-STD-10 ✓
THREADS PER MIL-STD-8, MIL-S-7742 & MIL-P-7105
RIVET CODING PER NAS 523
WELD SYMBOLS PER AN-STD-19
STD HOLE TOLERANCES PER AND 10387
ELECTRICAL & ELECTRONIC SYMBOLS & REFERENCE DESIGNATIONS PER MIL-STD-15 & MIL-STD-16

FINISH

HEAT TREAT

DO NOT SCALE DRAWING

STL APPROVALS

DRAWN	
CHECKED	M-F
STRUCTURES	
MAT'LS & PROCESSES	
LEAD ENGR	
SUPERVISION	
SPECIAL	
OTHER APPROVALS	

THE FOLLOWING E.O.'S HAVE BEEN ATTACHED TO THIS PRINT

SPACE TECHNOLOGY LABORATORIES, INC.
LOS ANGELES 45, CALIFORNIA

MODULE ASSY-A4

CODE IDENT NO.	DWG SIZE	
11982	C	A-11307
SCALE	WEIGHT	SHEET

DIETERICH-POST CLEARPRINT 1020

STL FORM 1451C

SK A 11400 | CHG LTR

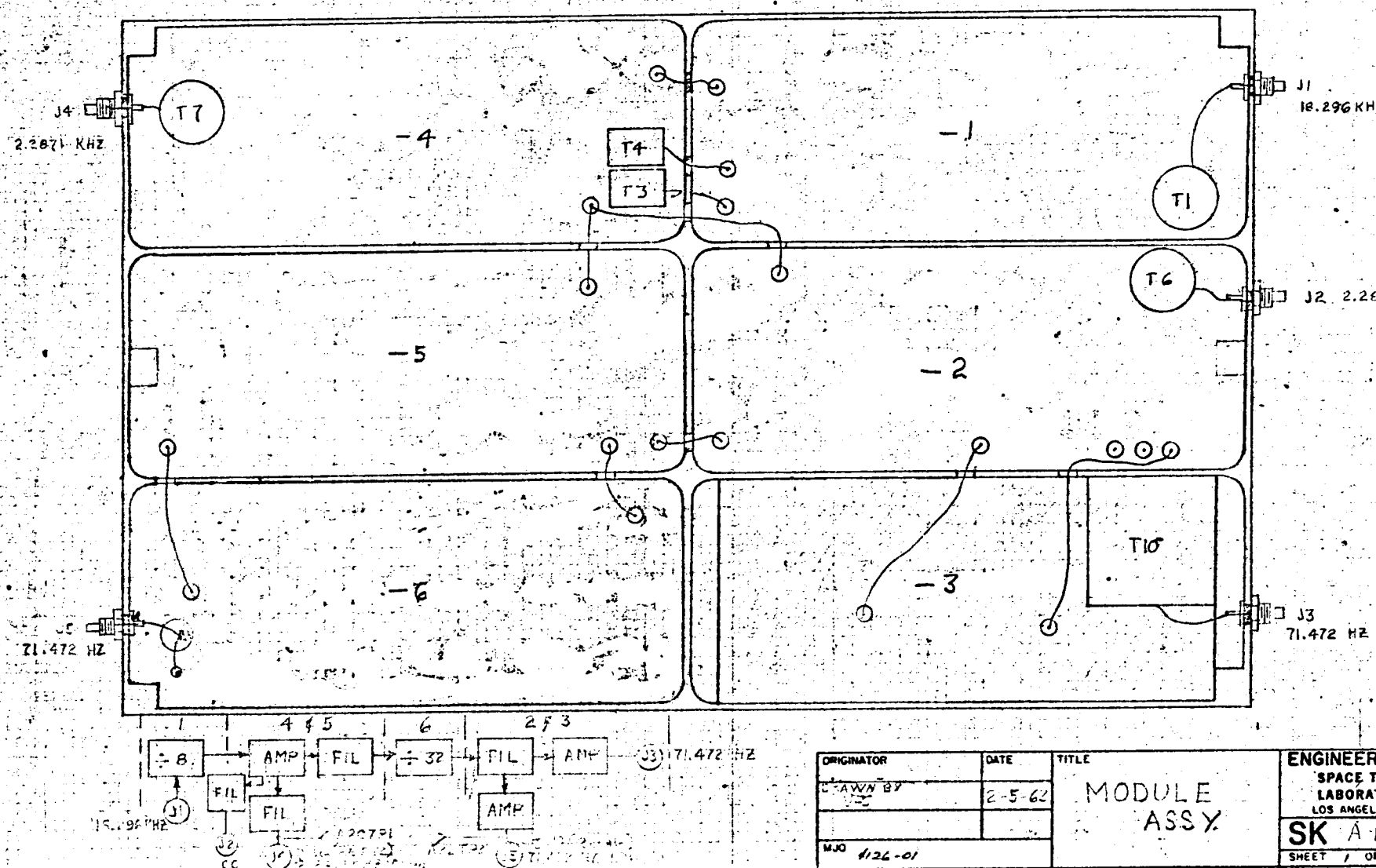

ORIGINATOR	DATE	TITLE	ENGINEERING SKETCH
DRAWN BY	2-5-62	MODULE ASSY.	SPACE TECHNOLOGY LABORATORIES, INC. LOS ANGELES, CALIFORNIA
MJO 6126-01			SK A 11400
			SHEET 1 OF 1

STL Form 5218 (Rev. 2 59)

SK A11401 CHG LTR

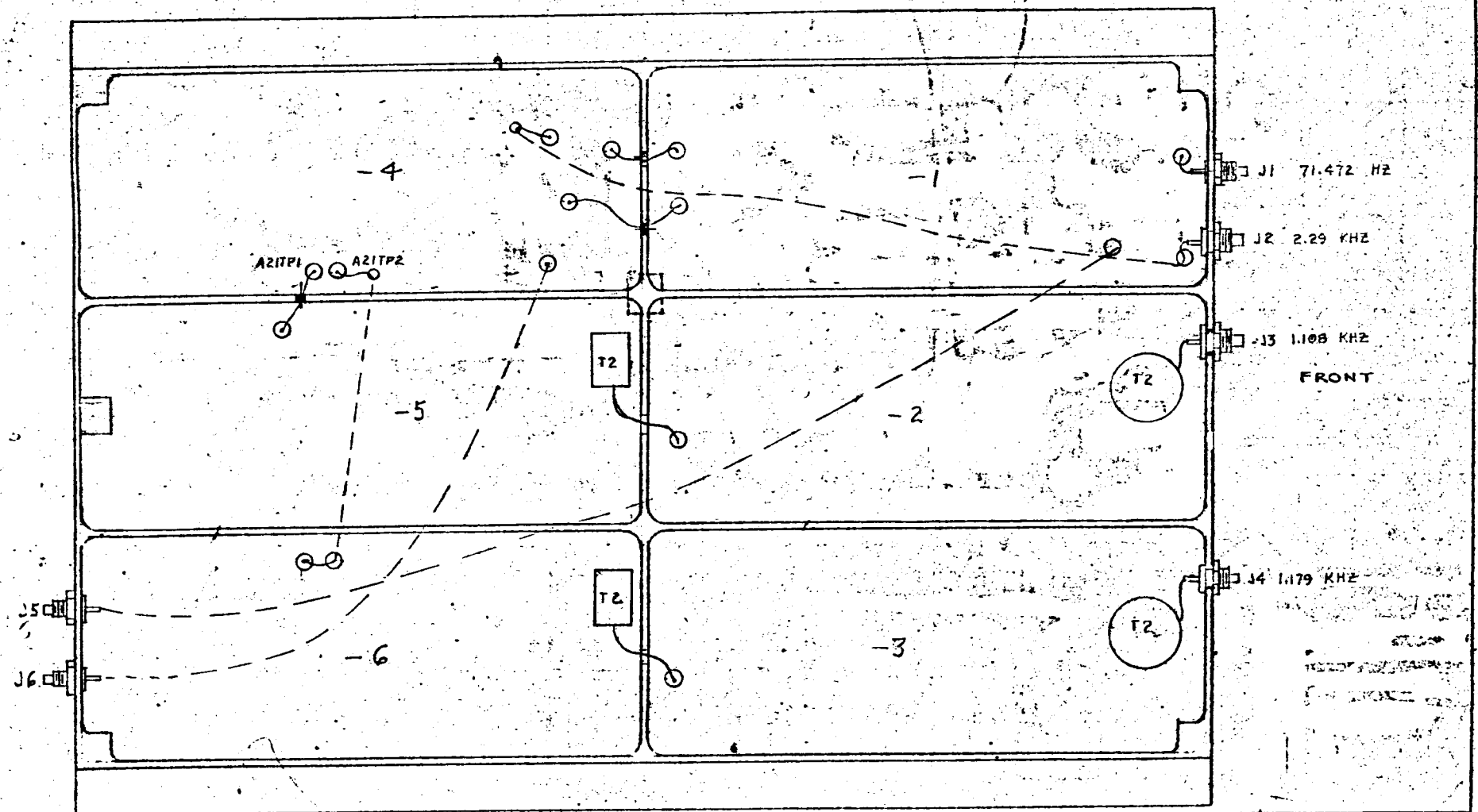

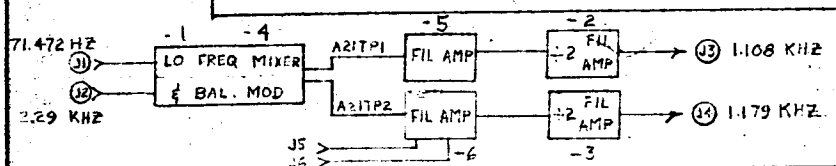

ORIGINATOR	DATE	TITLE
D. OBRADY	12-5-69	MODULE ASSY
DRAWN BY V.S.		
MJO		

ENGINEERING SKETCH
SPACE TECHNOLOGY LABORATORIES, INC.
LOS ANGELES, CALIFORNIA

SK A 11401

SHEET OF

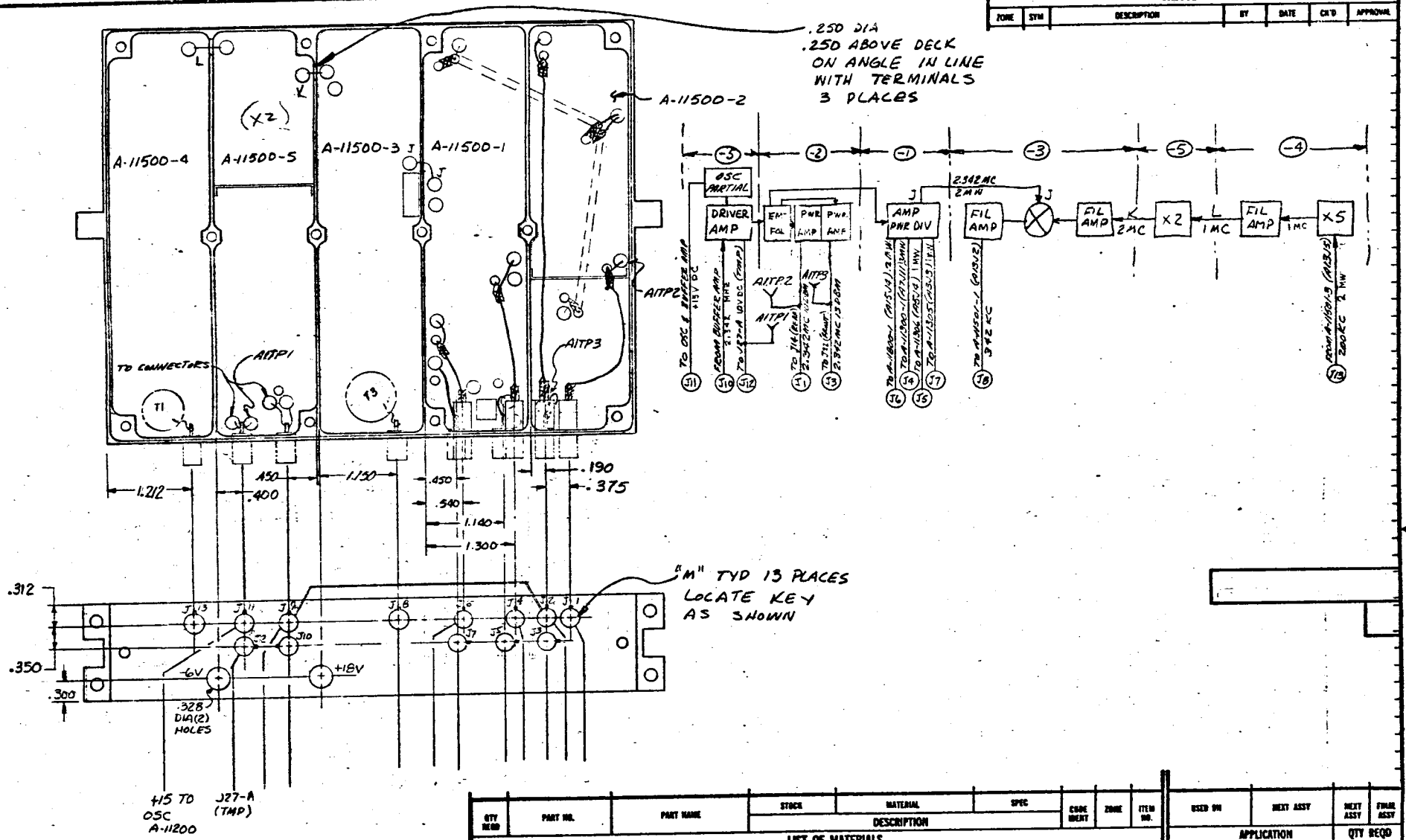

REVISIONS						
ZONE	SYM	DESCRIPTION	BY	DATE	CK'D	APPROVAL

QTY REQD	PART NO.	PART NAME	STOCK	MATERIAL	SPEC	CODE IDENT	ZONE	ITEM NO.	USED ON	NEXT ASSY	NEXT ASSY	FINAL ASSY
			DESCRIPTION						APPLICATION		QTY REQD	

LIST OF MATERIALS

UNLESS OTHERWISE SPECIFIED

DIMENSIONS IN INCHES
TOLERANCES .XXX = ±.010
.XX = ±.03
.X = ±.1
ANGLES ±0° 30'

REMOVE BURRS & SHARP EDGES
DIMENSIONING & TOLERANCING PER MIL-STD-8
SURFACE ROUGHNESS PER MIL-STD-10 ✓
THREADS PER MIL-STD-9, MIL-S-7742 & MIL-P-7105
RIVET CODING PER NAS 523
WELD SYMBOLS PER JAN-STD-19
STD HOLE TOLERANCES PER AND 10387
ELECTRICAL & ELECTRONIC SYMBOLS & REFERENCE DESIGNATIONS PER MIL-STD-15 & MIL-STD-16

FINISH

HEAT TREAT

DO NOT SCALE DRAWING

STL APPROVALS

DRAWN	[signature]	11-13-63
CHECKED	[signature]	
STRUCTURES		
MAT'LS & PROCESSES		
LEAD ENGR		
SUPERVISION		
SPECIAL		
OTHER APPROVALS		

THE FOLLOWING E.O.'S HAVE BEEN ATTACHED TO THIS PRINT

SPACE TECHNOLOGY LABORATORIES, INC.
LOS ANGELES 45, CALIFORNIA

MODULE ASSY-A1

CODE IDENT NO. 11982

DWG SIZE C

A-11500

SCALE

WEIGHT

SHEET

STL FORM 1461C

REVISIONS						
ZONE	SYM	DESCRIPTION	BY	DATE	CK'D	APPROVAL

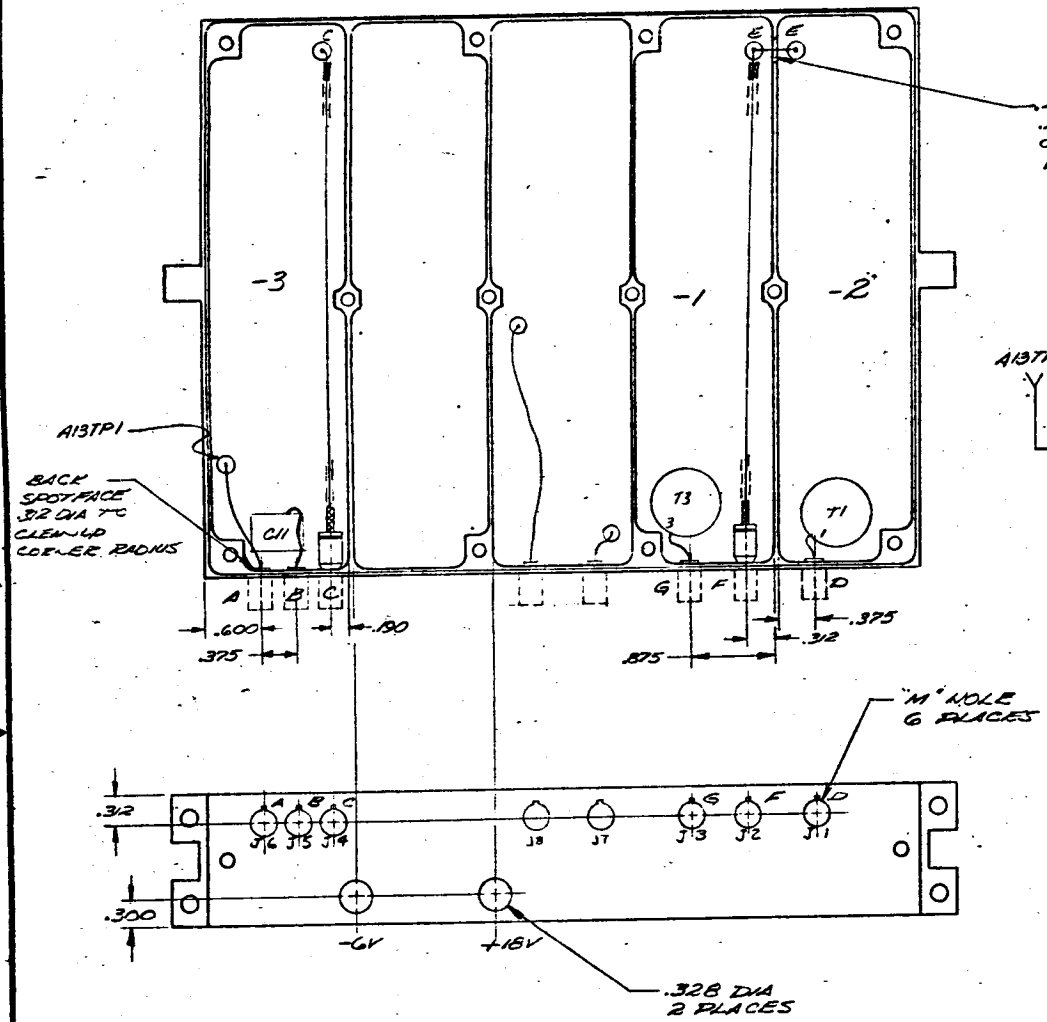

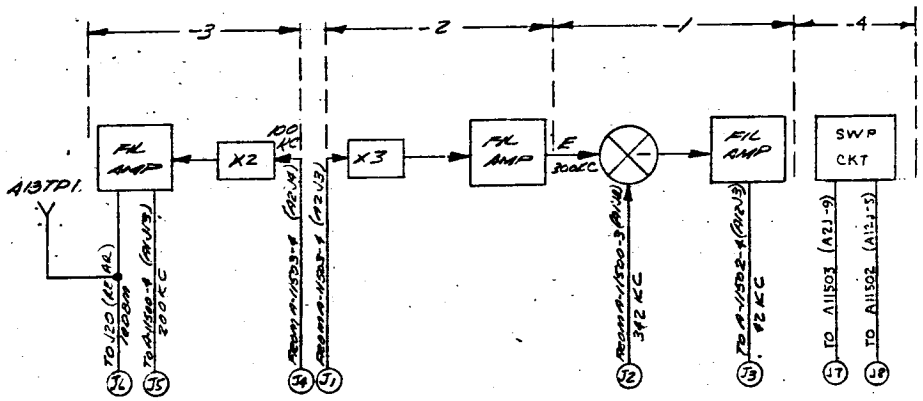

A-11501

QTY REQD	PART NO.	PART NAME	STOCK	MATERIAL	SPEC	CODE IDENT	ZONE	ITEM NO.	USED ON	NEXT ASSY	NEXT ASSY	FINAL ASSY
			DESCRIPTION						APPLICATION		QTY REQD	

LIST OF MATERIALS

UNLESS OTHERWISE SPECIFIED

DIMENSIONS IN INCHES
TOLERANCES .XXX = ±.010
.XX = ±.03
.X = ±.1
ANGLES ±0° 30'

REMOVE BURRS & SHARP EDGES
DIMENSIONING & TOLERANCING PER MIL-STD-8
SURFACE ROUGHNESS PER MIL-STD-10 ✓
THREADS PER MIL-STD-8, MIL-S-7742 & MIL-P-7105
RIVET CODING PER NAS 523
WELD SYMBOLS PER AN-STD-19
STD HOLE TOLERANCES PER AND 10387
ELECTRICAL & ELECTRONIC SYMBOLS & REFERENCE DESIGNATIONS PER MIL-STD-15 & MIL-STD-16

FINISH

HEAT TREAT

DO NOT SCALE DRAWING

STL APPROVALS		
DRAWN	[illegible]	18 Nov 63
CHECKED		
STRUCTURES		
MAT'LS & PROCESSES		
LEAD ENGR		
SUPERVISION		
SPECIAL		
OTHER APPROVALS		

THE FOLLOWING E.O.'S HAVE BEEN ATTACHED TO THIS PRINT

SPACE TECHNOLOGY LABORATORIES, INC.
LOS ANGELES 45, CALIFORNIA

MODULE ASSY-A13

CODE IDENT NO.	DWG SIZE	
11982	C	A-11501

SCALE | WEIGHT | SHEET

STL FORM 14

REVISIONS						
ZONE	SYMB	DESCRIPTION	BY	DATE	CH'D	APPROVAL

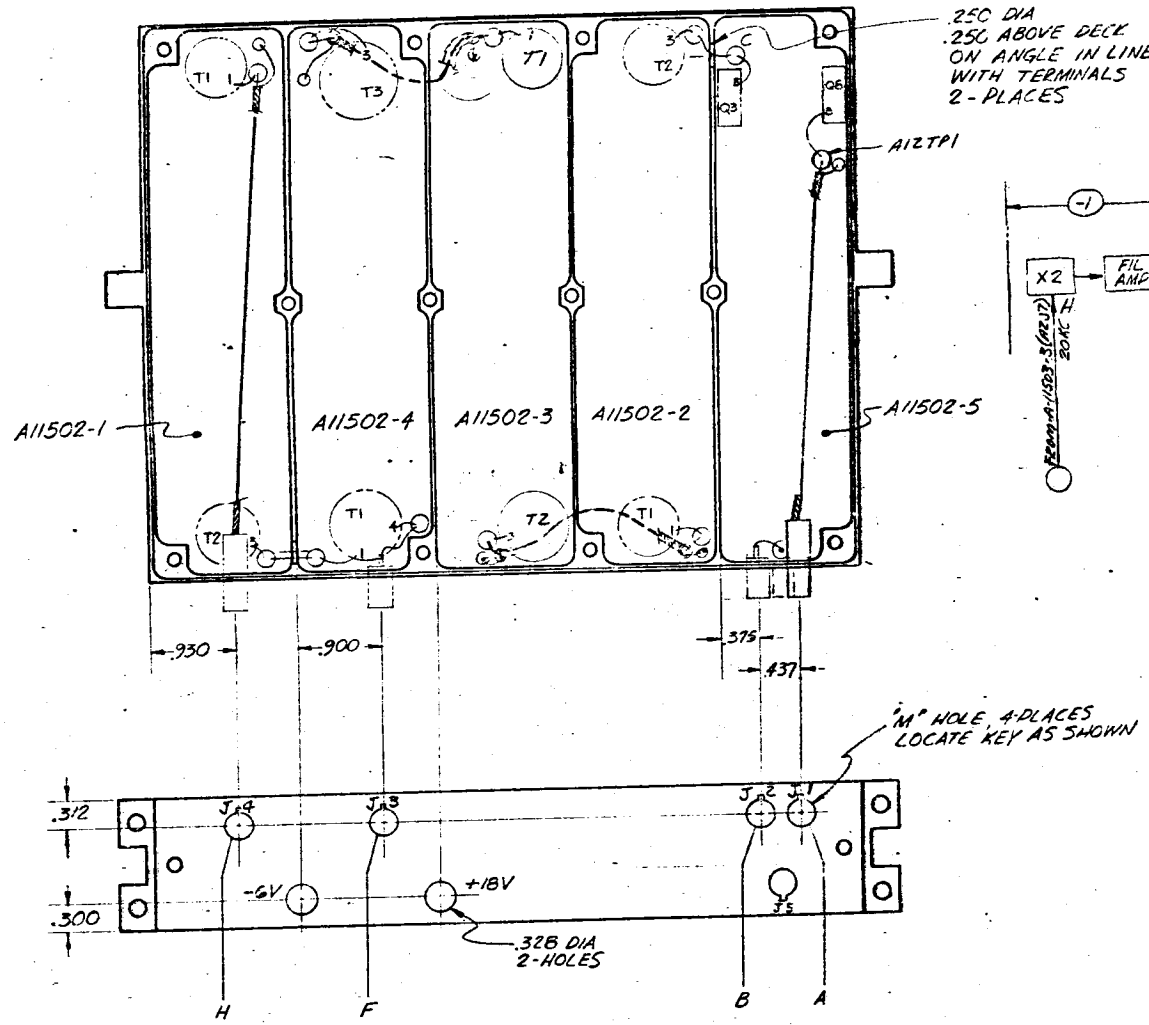

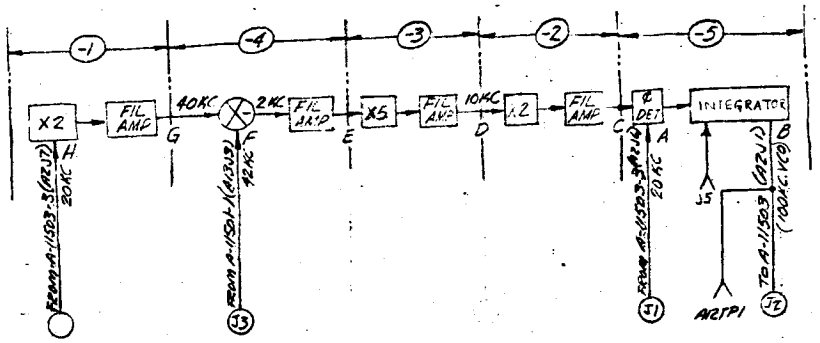

A-11502

QTY REQD	PART NO.	PART NAME	SIZE	MATERIAL / DESCRIPTION	SPEC	CODE IDENT	ZONE	ITEM NO.	USED ON	NEXT ASSY	NEXT ASSY	FINAL ASSY
									APPLICATION		QTY REQD	

LIST OF MATERIALS

UNLESS OTHERWISE SPECIFIED

DIMENSIONS IN INCHES
TOLERANCES .XXX = ±.010
.XX = ±.00
.X = ±.1
ANGLES ±0° 30'

REMOVE BURRS & SHARP EDGES
DIMENSIONING & TOLERANCING PER MIL-STD-8
SURFACE ROUGHNESS PER MIL-STD-10 ✓
THREADS PER MIL-STD-9, MIL-S-7742 & MIL-F-7105
RIVET CODING PER NAS 523
WELD SYMBOLS PER JAN-STD-19
STD HOLE TOLERANCES PER AND 10387
ELECTRICAL & ELECTRONIC SYMBOLS & REFERENCE DESIGNATIONS PER MIL-STD-15 & MIL-STD-16

FINISH

HEAT TREAT

DO NOT SCALE DRAWING

STL APPROVALS

DRAWN	E. GREEN	11-15-62
CHECKED		
STRUCTURES		
MAT'LS & PROCESSES		
LEAD ENGR		
SUPERVISION		
SPECIAL		
OTHER APPROVALS		

THE FOLLOWING E.O.'S HAVE BEEN ATTACHED TO THIS PRINT

SPACE TECHNOLOGY LABORATORIES, INC.
LOS ANGELES 45, CALIFORNIA

MODULE ASSY-A12

CODE IDENT NO.	DWG SIZE	
11982	C	A-11502

SCALE | WEIGHT | SHEET

STL FORM 1461C

REVISIONS						
ZONE	SYM	DESCRIPTION	BY	DATE	CK'D	APPROVAL

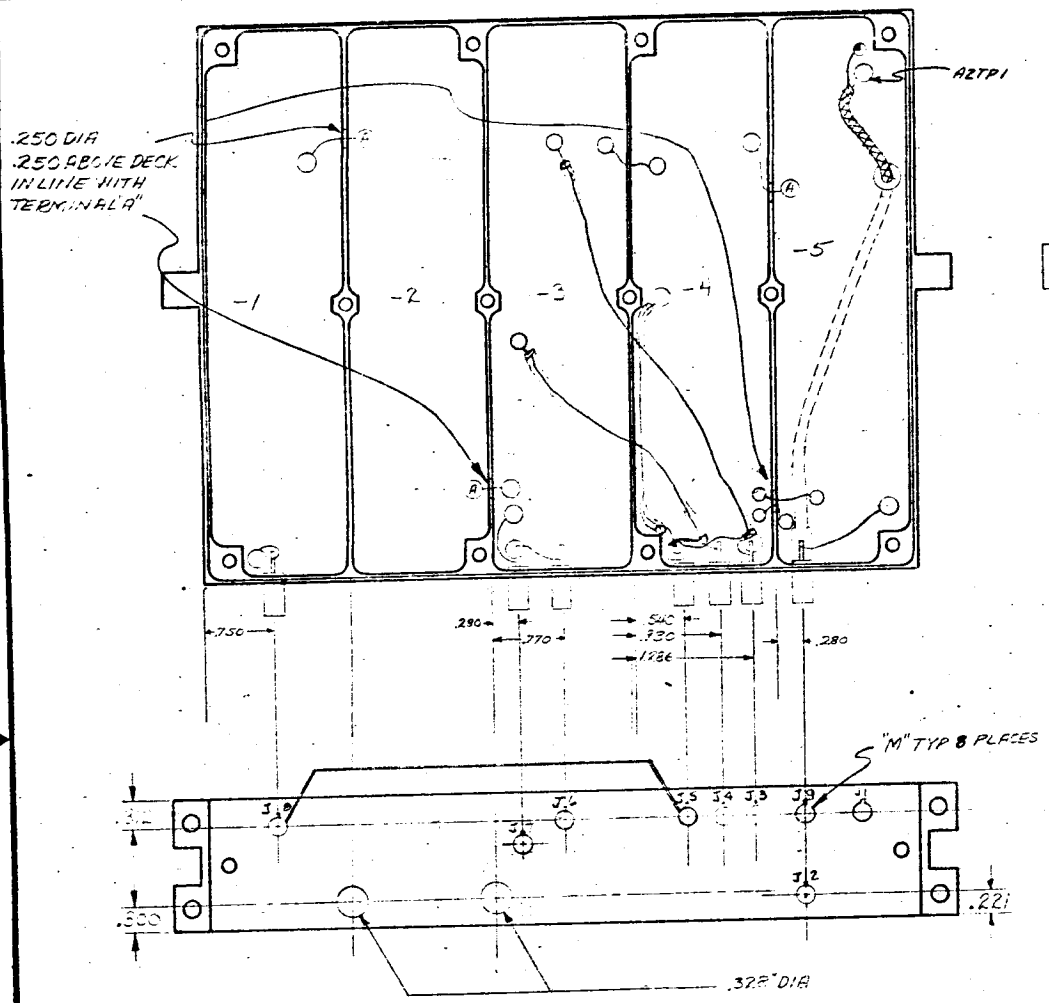

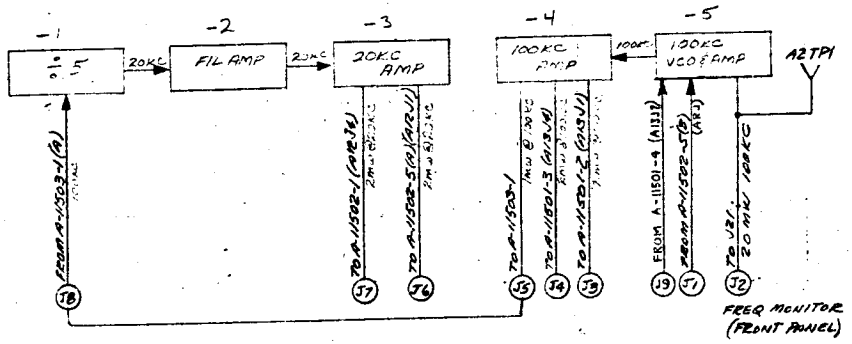

A 11503

QTY REQD	PART NO.	PART NAME	STOCK	MATERIAL	SPEC	CODE IDENT	ZONE	ITEM NO.	USED ON	NEXT ASSY	NEXT ASSY	FINAL ASSY
			DESCRIPTION						APPLICATION		QTY REQD	

LIST OF MATERIALS

UNLESS OTHERWISE SPECIFIED

DIMENSIONS IN INCHES
TOLERANCES .XXX = ±.010
.XX = ±.03
.X = ±.1
ANGLES ±0° 30'

REMOVE BURRS & SHARP EDGES
DIMENSIONING & TOLERANCING PER MIL-STD-8
SURFACE ROUGHNESS PER MIL-STD-10 ✓
THREADS PER MIL-STD-8, MIL-S-7742 & MIL-P-7105
RIVET CODING PER NAS 523
WELD SYMBOLS PER JAN-STD-19
STD HOLE TOLERANCES PER AND 10387
ELECTRICAL & ELECTRONIC SYMBOLS & REFERENCE DESIGNATIONS PER MIL STD-15 & MIL STD-16

FINISH

HEAT TREAT

DO NOT SCALE DRAWING

STL APPROVALS

DRAWN	
CHECKED	
STRUCTURES	
MAT'LS & PROCESSES	
LEAD ENGR	
SUPERVISION	
SPECIAL	
OTHER APPROVALS	

THE FOLLOWING E.O.'S HAVE BEEN ATTACHED TO THIS PRINT

SPACE TECHNOLOGY LABORATORIES, INC.
LOS ANGELES 45, CALIFORNIA

MODULE ASSY-A2

CODE IDENT NO.	DWG SIZE	DWG NO.
11982	C	A11503

SCALE | WEIGHT | SHEET

STL FORM 1451C

REVISIONS						
ZONE	SYM	DESCRIPTION	BY	DATE	CK'D	APPROVAL

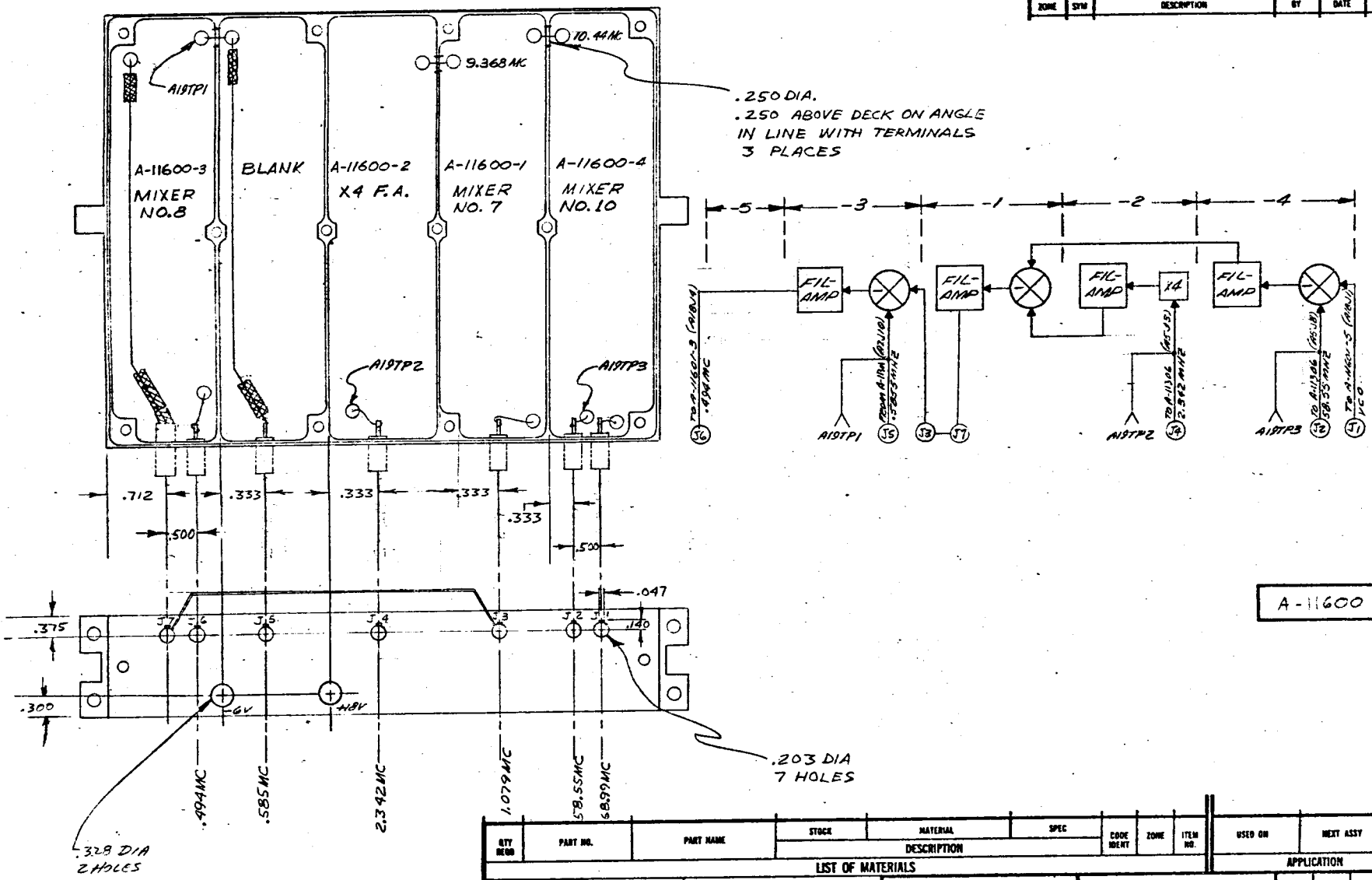

A-11600

QTY REQD	PART NO.	PART NAME	STOCK	MATERIAL	SPEC	CODE IDENT	ZONE	ITEM NO.	USED ON	NEXT ASSY	NEXT ASSY	FINAL ASSY
			DESCRIPTION						APPLICATION		QTY REQD	

LIST OF MATERIALS

UNLESS OTHERWISE SPECIFIED

DIMENSIONS IN INCHES
TOLERANCES .XXX = ±.010
.XX = ±.03
.X = ±.1
ANGLES ±0° 30'

REMOVE BURRS & SHARP EDGES
DIMENSIONING & TOLERANCING PER MIL-STD-8
SURFACE ROUGHNESS PER MIL-STD-10 ✓
THREADS PER MIL-STD-9, MIL-S-7742 & MIL-P-7105
RIVET CODING PER NAS 523
WELD SYMBOLS PER JAN-STD-19
STD HOLE TOLERANCES PER AND 10387
ELECTRICAL & ELECTRONIC SYMBOLS & REFERENCE DESIGNATIONS PER MIL STD-15 & MIL-STD-16

FINISH

HEAT TREAT

DO NOT SCALE DRAWING

THE FOLLOWING E.O.'S HAVE BEEN ATTACHED TO THIS PRINT

STL APPROVALS

DRAWN	
CHECKED	KJ
STRUCTURES	
MAT'LS & PROCESSES	
LEAD ENGR	
SUPERVISION	
SPECIAL	
OTHER APPROVALS	

SPACE TECHNOLOGY LABORATORIES, INC.
LOS ANGELES 45, CALIFORNIA

MODULE ASSY-A19
FREQ. DETERMINATION
#1-A

CODE IDENT NO.	DWG SIZE	
11982	C	A-11600

SCALE | WEIGHT | SHEET

STL FORM 1451C

DHTER/CN-POST LLLARPRINT 3028

REVISIONS						
ZONE	SYM	DESCRIPTION	BY	DATE	CH'D	APPROVAL

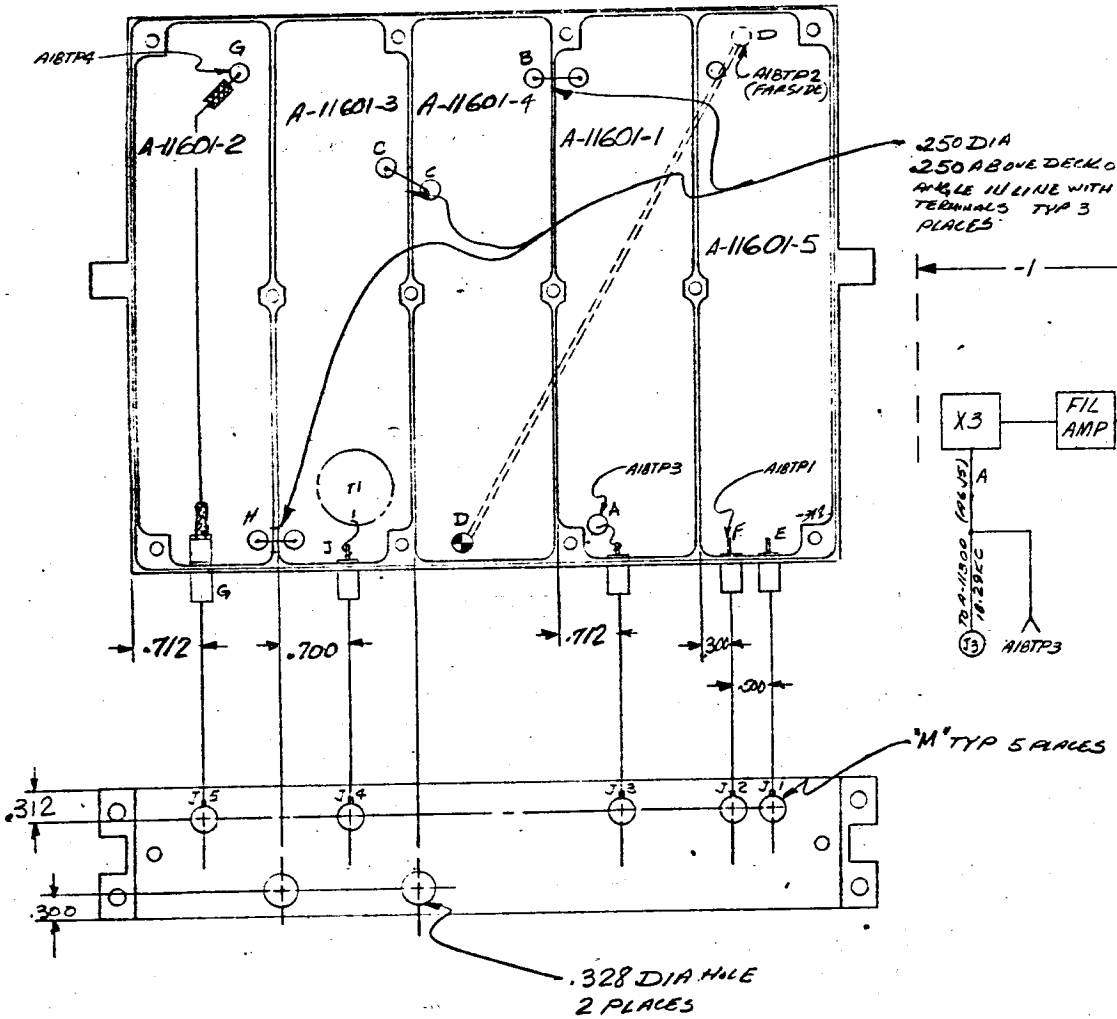

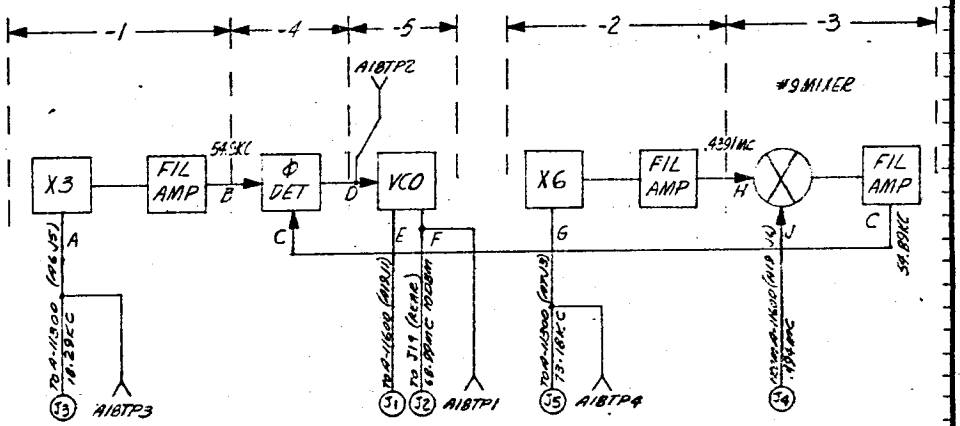

A-11601

QTY REQD	PART NO.	PART NAME	STOCK	MATERIAL	SPEC	CODE IDENT	ZONE	ITEM NO	USED ON	NEXT ASSY	NEXT ASSY	FINAL ASSY
			DESCRIPTION						APPLICATION		QTY REQD	

LIST OF MATERIALS

UNLESS OTHERWISE SPECIFIED

DIMENSIONS IN INCHES
TOLERANCES .XXX = ±.010
.XX = ±.03
.X = ±.1
ANGLES ±0° 30'

REMOVE BURRS & SHARP EDGES
DIMENSIONING & TOLERANCING PER MIL-STD-8
SURFACE ROUGHNESS PER MIL-STD-10 ✓
THREADS PER MIL-STD-9, MIL-S-7742 & MIL-P-7105
RIVET CODING PER NAS 523
WELD SYMBOLS PER JAN-STD-19
STD HOLE TOLERANCES PER AMD 10387
ELECTRICAL & ELECTRONIC SYMBOLS & REFERENCE DESIGNATIONS PER MIL STD-15 & MIL STD-16

FINISH

HEAT TREAT

DO NOT SCALE DRAWING

STL APPROVALS

DRAWN	
CHECKED	N/A
STRUCTURES	
MAT'LS & PROCESSES	
LEAD ENGR	
SUPERVISION	
SPECIAL	
OTHER APPROVALS	

THE FOLLOWING E.O.'S HAVE BEEN ATTACHED TO THIS PRINT

SPACE TECHNOLOGY LABORATORIES, INC.
LOS ANGELES 45, CALIFORNIA

MODULE ASSY-A18

CODE IDENT NO.	DWG SIZE	
11982	C	A-11601

SCALE | WEIGHT | SHEET

STL FORM 1451C

REVISIONS						
ZONE	SYM	DESCRIPTION	BY	DATE	CK'D	APPROVAL

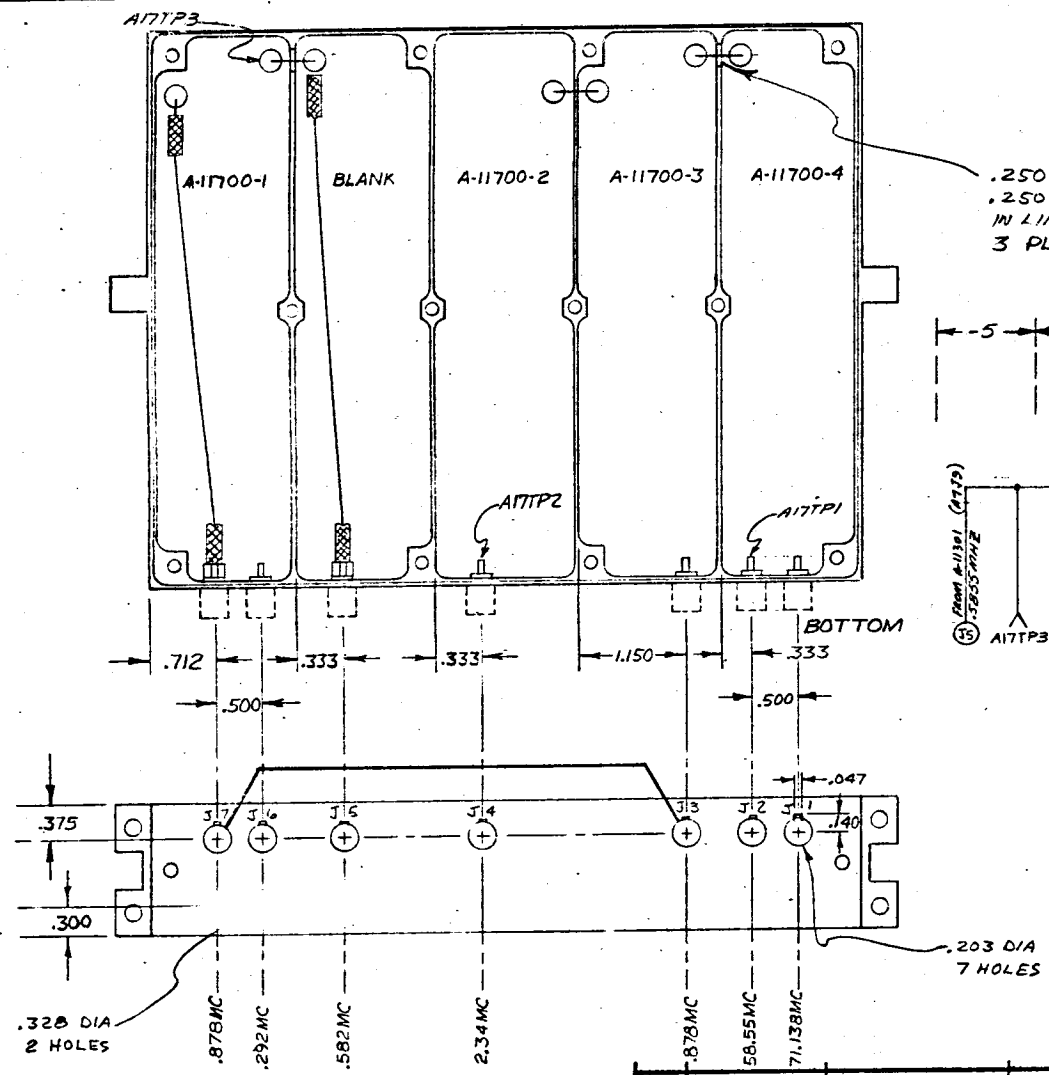

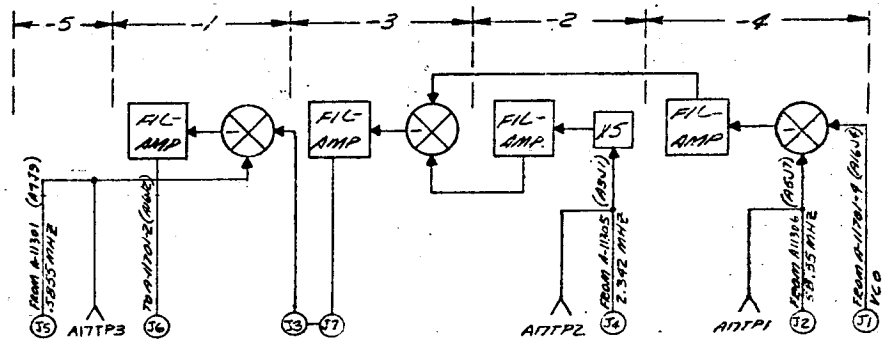

A-11700

QTY REQD	PART NO.	PART NAME	STOCK	MATERIAL	SPEC	CODE IDENT	ZONE	ITEM NO.	USED ON	NEXT ASSY	NEXT ASSY	FINAL ASSY
			DESCRIPTION						APPLICATION		QTY REQD	

LIST OF MATERIALS

UNLESS OTHERWISE SPECIFIED

DIMENSIONS IN INCHES
TOLERANCES .XXX = ±.010
.XX = ±.03
.X = ±.1
ANGLES ±0° 30'

REMOVE BURRS & SHARP EDGES
DIMENSIONING & TOLERANCING PER MIL-STD-8
SURFACE ROUGHNESS PER MIL-STD-10 ✓
THREADS PER MIL-S-8879, MIL-S-7742 & MIL-P-7105
RIVET CODING PER NAS 523
WELD SYMBOLS PER AN-STD-19
STD HOLE TOLERANCES PER AND 10387
ELECTRICAL & ELECTRONIC SYMBOLS & REFERENCE DESIGNATIONS PER ANSI STD-15 & MIL STD-16

FINISH

HEAT TREAT

DO NOT SCALE DRAWING

THE FOLLOWING E.O.'S HAVE BEEN ATTACHED TO THIS PRINT

STL APPROVALS

DRAWN	
CHECKED	H.C
STRUCTURES	
MAT'LS & PROCESSES	
LEAD ENGR	
SUPERVISION	
SPECIAL	
OTHER APPROVALS	

SPACE TECHNOLOGY LABORATORIES, INC.
LOS ANGELES 45, CALIFORNIA

MODULE ASSY, -A17
FREQ. DETERMINATION
- #2A

CODE IDENT NO.	DWG SIZE	
11982	C	A-11700

SCALE | WEIGHT | SHEET

DIETERICH-POST CLEARPRINT 1400

STL FORM 1451C

REVISIONS						
ZONE	SYM	DESCRIPTION	BY	DATE	CK'D	APPROVAL

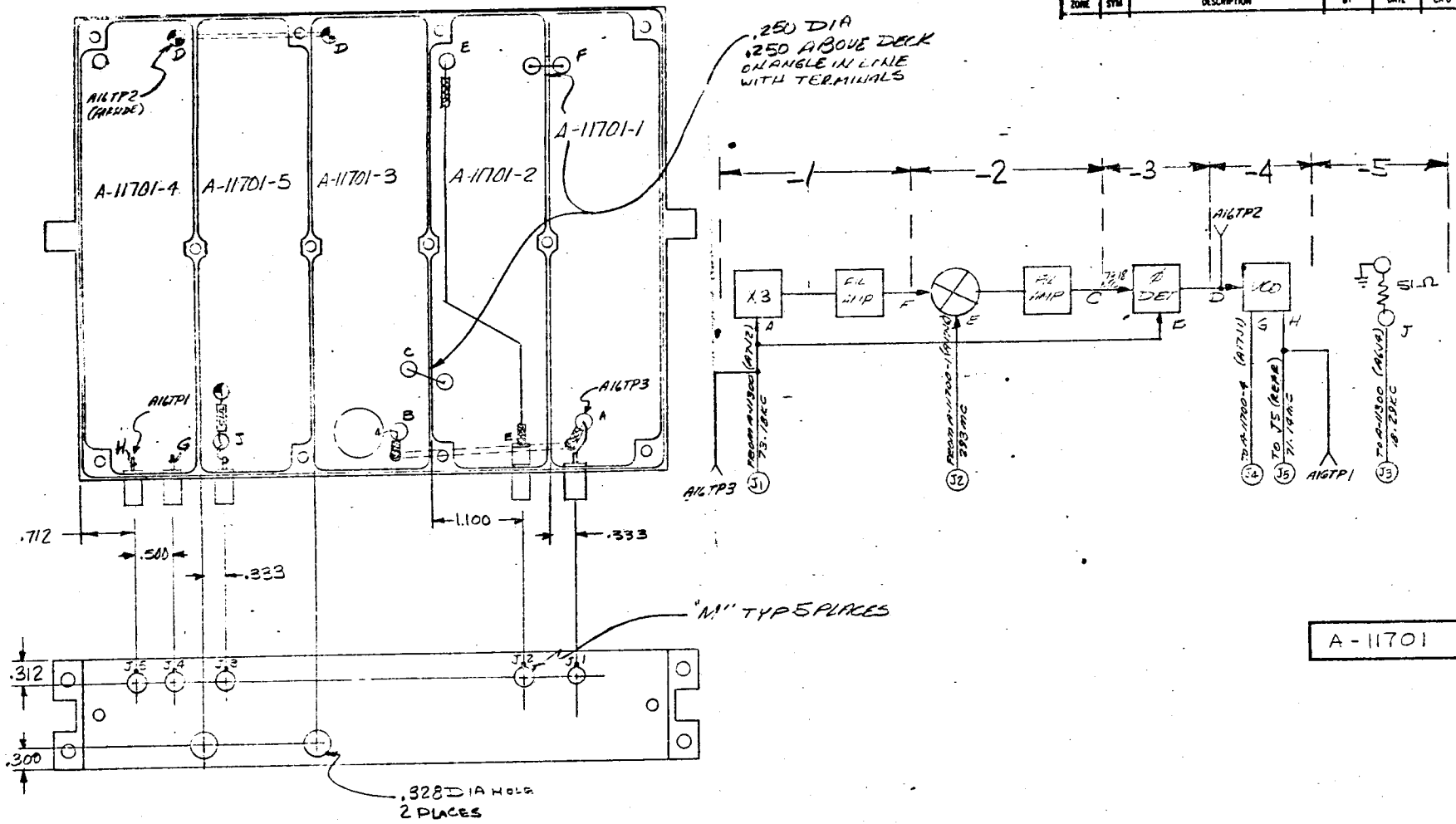

A-11701

QTY REQD	PART NO.	PART NAME	STOCK	MATERIAL	SPEC	CODE IDENT	ZONE	ITEM NO	USED ON	NEXT ASSY	NEXT ASSY	FINAL ASSY
			DESCRIPTION						APPLICATION		QTY REQD	

LIST OF MATERIALS

UNLESS OTHERWISE SPECIFIED

DIMENSIONS IN INCHES
TOLERANCES .XXX = ± .010
.XX = ± .03
.X = ± .1
ANGLES ± 0° 30'

REMOVE BURRS & SHARP EDGES

DIMENSIONING & TOLERANCING PER MIL-STD-8

SURFACE ROUGHNESS PER MIL-STD-10 ✓

THREADS PER MIL-STD-9, MIL-S-7742 & MIL-P-7105

RIVET CODING PER NAS 523

WELD SYMBOLS PER JAN-STD-19

STD HOLE TOLERANCES PER AND 10387

ELECTRICAL & ELECTRONIC SYMBOLS & REFERENCE DESIGNATIONS PER MIL-STD-15 & MIL STD-16

FINISH

HEAT TREAT

DO NOT SCALE DRAWING

STL APPROVALS

DRAWN

CHECKED

STRUCTURES

MAT'LS & PROCESSES

LEAD ENGR

SUPERVISION

SPECIAL

OTHER APPROVALS

THE FOLLOWING E.O.'S HAVE BEEN ATTACHED TO THIS PRINT

SPACE TECHNOLOGY LABORATORIES, INC.
LOS ANGELES 45, CALIFORNIA

MODULE ASSY-A16

CODE IDENT NO. 11982

DWG SIZE C

A-11701

SCALE

WEIGHT

SHEET

STL FORM 1451

REVISIONS						
ZONE	SYM	DESCRIPTION	BY	DATE	CK'D	APPROVAL

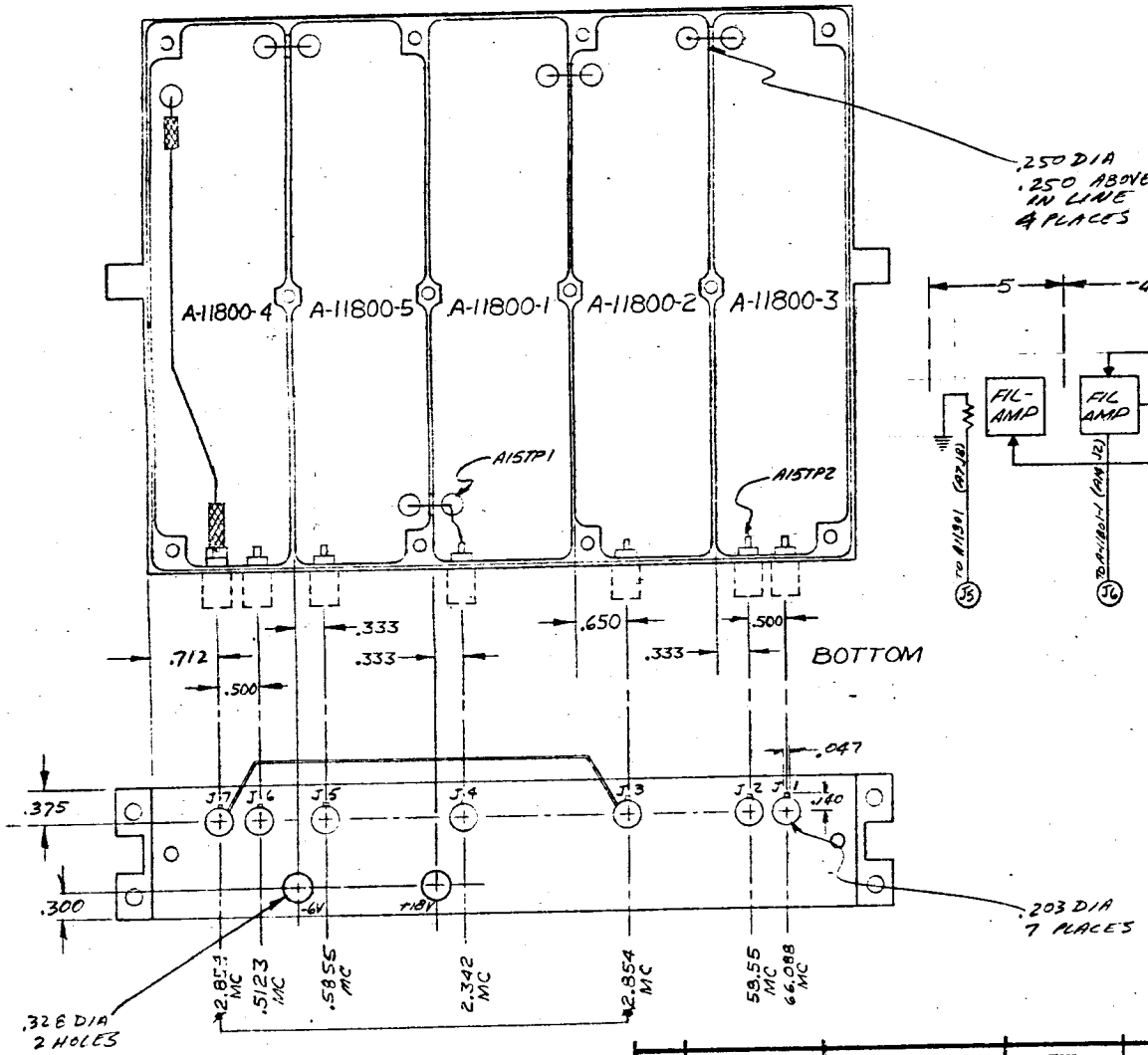

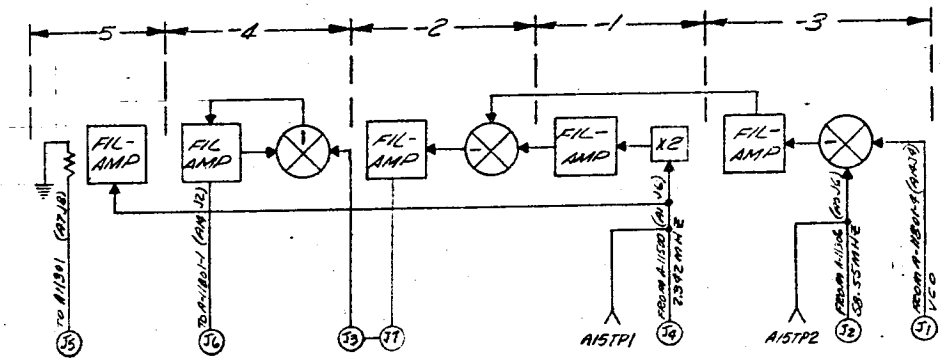

A - 11800

QTY REQD	PART NO.	PART NAME	STOCK	MATERIAL	SPEC	CODE IDENT	ZONE	ITEM NO.	USED ON	NEXT ASSY	NEXT ASSY	FINAL ASSY
			DESCRIPTION						APPLICATION		QTY REQD	

LIST OF MATERIALS

UNLESS OTHERWISE SPECIFIED
DIMENSIONS IN INCHES
TOLERANCES .XXX = ±.010
.XX = ±.03
.X = ±.1
ANGLES ±0° 30'
REMOVE BURRS & SHARP EDGES
DIMENSIONING & TOLERANCING PER MIL-STD-8
SURFACE ROUGHNESS PER MIL-STD-10 ✓
THREADS PER MIL-STD-9, MIL-S-7742 & MIL-P-7135
RIVET CODING PER NAS 523
WELD SYMBOLS PER JAN-STD-19
STD HOLE TOLERANCES PER AND 10387
ELECTRICAL & ELECTRONIC SYMBOLS & REFERENCE DESIGNATIONS PER MIL STD-15 & MIL STD-16

FINISH

HEAT TREAT

DO NOT SCALE DRAWING

STL APPROVALS
DRAWN
CHECKED NJ
STRUCTURES
MAT'LS & PROCESSES
LEAD ENGR
SUPERVISION
SPECIAL
OTHER APPROVALS

THE FOLLOWING E.O.'S HAVE BEEN ATTACHED TO THIS PRINT

SPACE TECHNOLOGY LABORATORIES, INC.
LOS ANGELES 45, CALIFORNIA

MODULE ASSY, -A15
FREQ. DETERMINATION
#3-A

CODE IDENT NO.	DWG SIZE	
11982	C	A-11800
SCALE	WEIGHT	SHEET

STL FORM 1451C

DIETERICH-POST CLEARPRINT

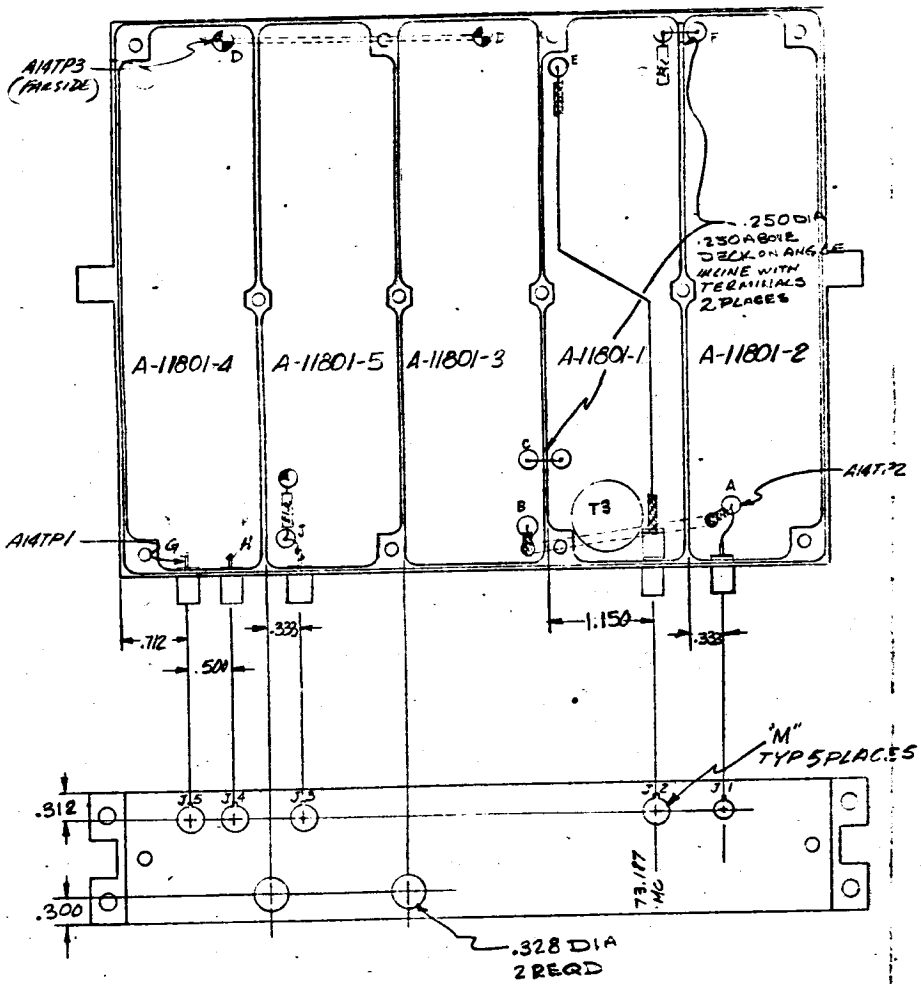

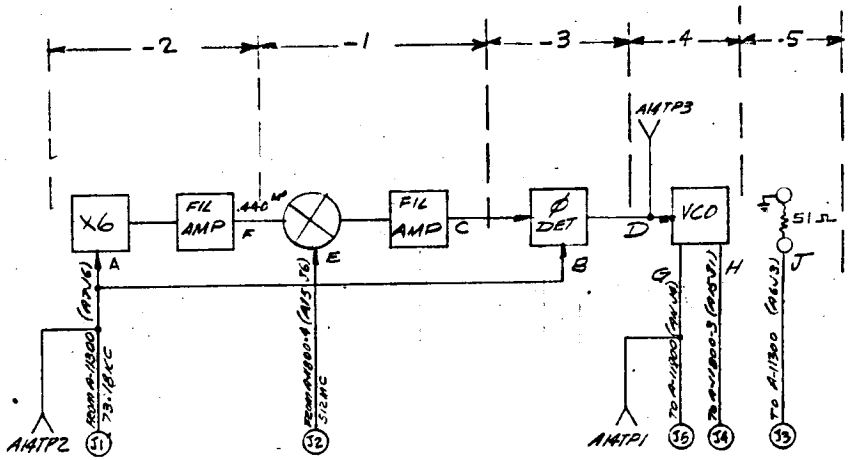

A-11801

REVISIONS						
ZONE	SYM	DESCRIPTION	BY	DATE	CK'D	APPROVAL

QTY REQD	PART NO.	PART NAME	STOCK	MATERIAL	SPEC	CODE IDENT	ZONE	ITEM NO.	USED ON	NEXT ASSY	NEXT ASSY	FINAL ASSY
			DESCRIPTION						APPLICATION		QTY REQD	

LIST OF MATERIALS

UNLESS OTHERWISE SPECIFIED

DIMENSIONS IN INCHES
TOLERANCES .XXX = ±.010
.XX = ±.03
.X = ±.1
ANGLES ±0° 30'

REMOVE BURRS & SHARP EDGES
DIMENSIONING & TOLERANCING PER MIL-STD-8
SURFACE ROUGHNESS PER MIL-STD-10 ✓
THREADS PER MIL-STD-9, MIL-S-7742 & MIL-P-7105
RIVET CODING PER NAS 523
WELD SYMBOLS PER JAN-STD-19
STD HOLE TOLERANCES PER AND 10387
ELECTRICAL & ELECTRONIC SYMBOLS & REFERENCE DESIGNATIONS PER MIL-STD-15 & MIL-STD-16

FINISH

HEAT TREAT

DO NOT SCALE DRAWING

STL APPROVALS

DRAWN
CHECKED
STRUCTURES
MAT'LS & PROCESSES
LEAD ENGR
SUPERVISION
SPECIAL
OTHER APPROVALS

THE FOLLOWING E.O.'S HAVE BEEN ATTACHED TO THIS PRINT

SPACE TECHNOLOGY LABORATORIES, INC.
LOS ANGELES 45, CALIFORNIA

MODULE ASSY-A14

CODE IDENT NO. 11982 | DWG SIZE C | A-11801

SCALE | WEIGHT | SHEET

STL FORM 1452

DIETERICH-POST CLEARPRINT 1020

SK | CHG LTR

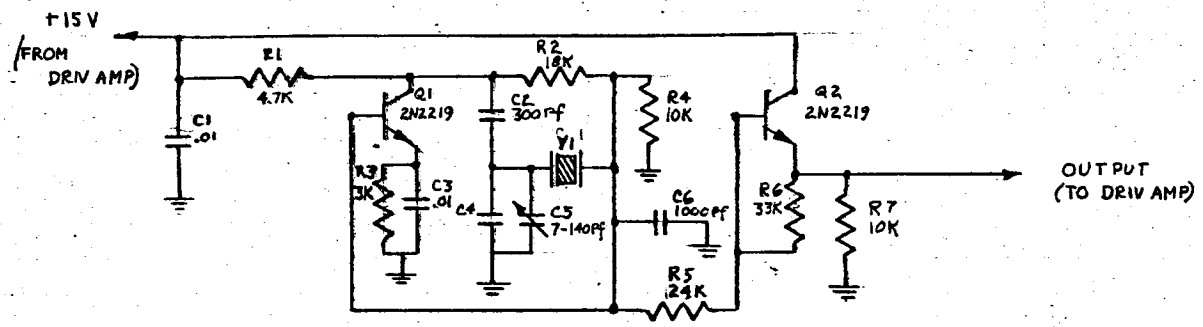

NO REQD	MFR OR STL PART NO	MFR	DESCRIPTION	SYM
2			TRANSISTOR 2N2219	Q1, Q2
1			CRYSTAL 2,342,000.0 MC	Y1
1		CORNING	CAPACITOR 1000 Pf	C6
1		HAMMURLAND	7-140 VARIABLE	C5
1		CORNING	1100 Pf - ① 820 Pf - ②	C4
1		VITRAMON	300 Pf	C2
2		VITRAMON	CAPACITOR .01	C1, C3
1			RESISTOR 33 K	R6
1			24K	R5
2			10 K	R4, R7
1			3 K	R3
1			18 K	R2
1			RESISTOR 4.7K	R1

ORIGINATOR J HABRA	DATE	TITLE MASTER OSCILLATOR	ENGINEERING SKETCH SPACE TECHNOLOGY LABORATORIES, INC. LOS ANGELES, CALIFORNIA
MJO			SKA-11201 SHEET OF

STL Form 5238 (Rev. 2-59)

SK

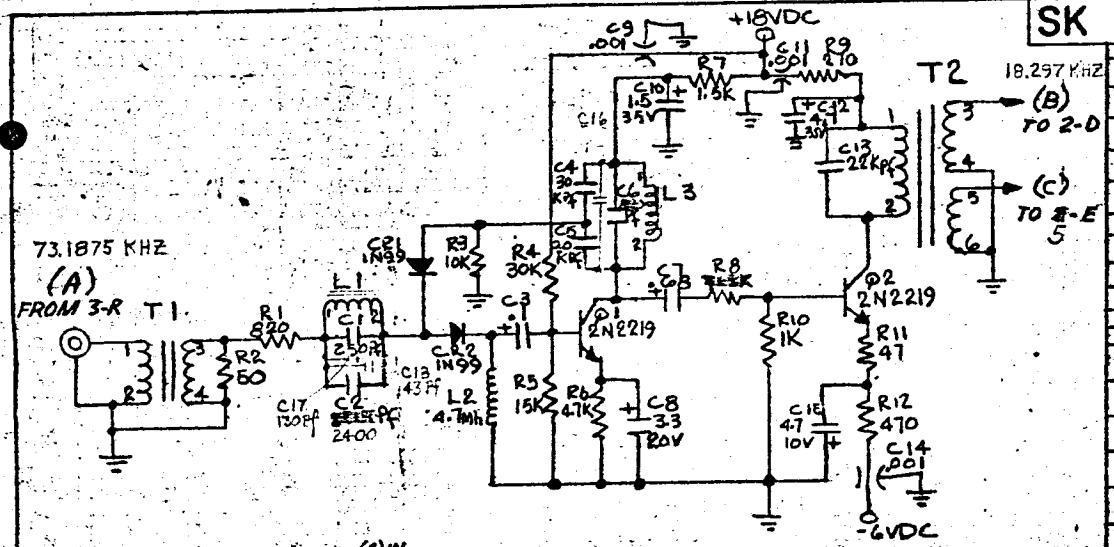

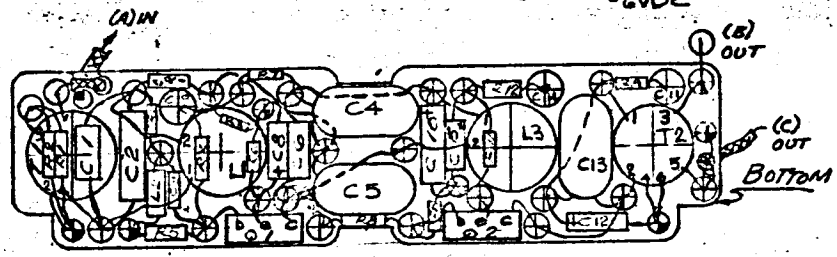

T1
PRI 70T #32 } BIFILAR
SEC 70T #32

T2
PRI 210T #32
SEC #1 120T #34 } BIFILAR
SEC #2 120T #34

L1
207 T #32

L3
250 T #32

NO REQD	MFR OR STL PART NO	MFR	DESCRIPTION	REF DESIG.
1	[illegible]	[illegible]	1800 pf CAP.	C14
2	A11022	STL	HEAT SINK	
	4073-062	LERCO	TERMINAL, INSUL	
	1280B/ET2064	USECO/STL	TERMINAL; GRD	
4	55120-W4		CORE	
1	SWD-4700	NYTRONICS	CHOKE 4.7 Mh	L2
2	1N99	HUGES	DIODE	CR1, CR2
2	2N2219	MOTOROLA	TRANSISTOR	Q1, Q2
1	HRDM-20-223J	ELMENCO	22 K Pf CAPACITOR	C13
1	150D475X9010	SPRAGUE	4.7 uf 10VDC	C15
1	150D475X9035	SPRAGUE	4.7 uf 35VDC	C12
1	150D155X9035	SPRAGUE	1.5 uf 35VDC	C10
3	FA5C-102W	ALLENBRADLEY	.001 uf STAND OFF	C9, C11, C14
1	150D335X9020	SPRAGUE	3.3 uf 20VDC	C8
1	150D684X9035	SPRAGUE	.68 uf 35VDC	C7
1	CYFM15C821J	CORNING	820 Pf	C6
2	HRDM-30-303J	ELMENCO	30K Pf	C4 C5
1	150D104X9035	SPRAGUE	.1 uf 35VDC	C3
1	CYFM20C252J	CORNING	2500 Pf 2400	C2
1	CYFM10C251J	CORNING	250 Pf 240 CAPACITOR 173 pf - ①	C1
1			470Ω RESISTOR 1/4W, 5%	R12
1			47Ω	R11
1			1K	R10
1			270Ω	R9
1			7.5K 9.1K - ① 7.5K - ②	R8
1			1.5K	R7
1			4.7K	R6
1			15K	R5
1			30K	R4
1			10K	R3
1			50Ω	R2
1			820Ω RESISTOR 1/4W, 5%	R1

NO REQD	PART NO	MFR	DESCRIPTION	ITEM
1			43 Pf CAPACITOR	C18
1			130 Pf	C17
1			510 Pf	C16

ORIGINATOR: J. Andreisen
DATE: 11/7/63
MJO

TITLE: r/4 DIVIDER
INPUT
73.1875 KHZ - 18.297 KHZ

ENGINEERING SKETCH
SPACE TECHNOLOGY LABORATORIES, INC.
LOS ANGELES, CALIFORNIA

SK A-11300-1
SHEET OF

STL Form 523B (Rev. 2-59)

SK | CHG LTR

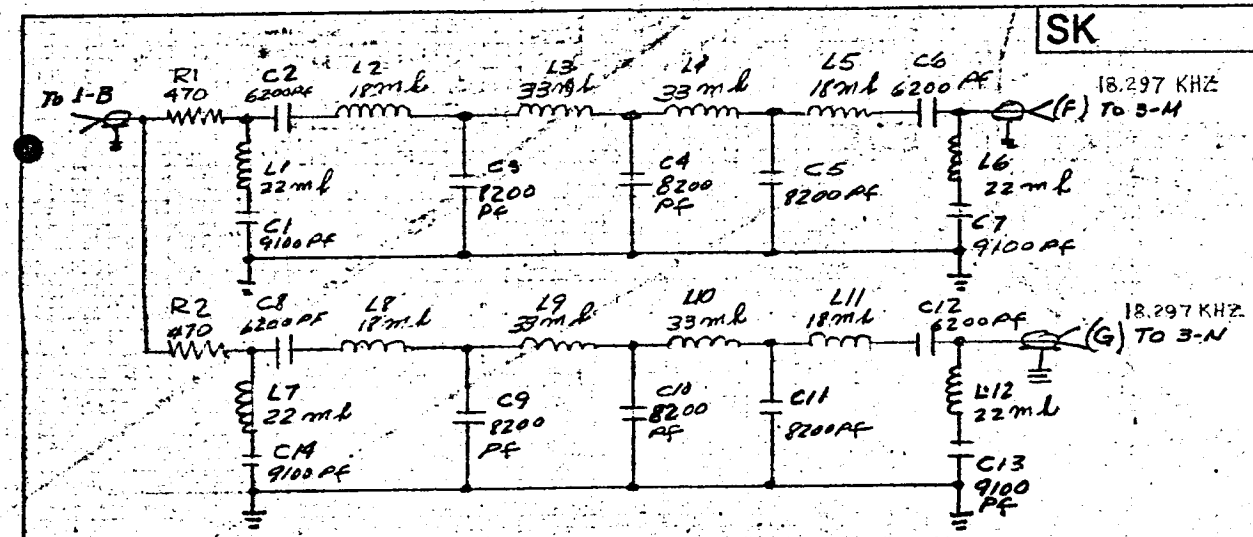

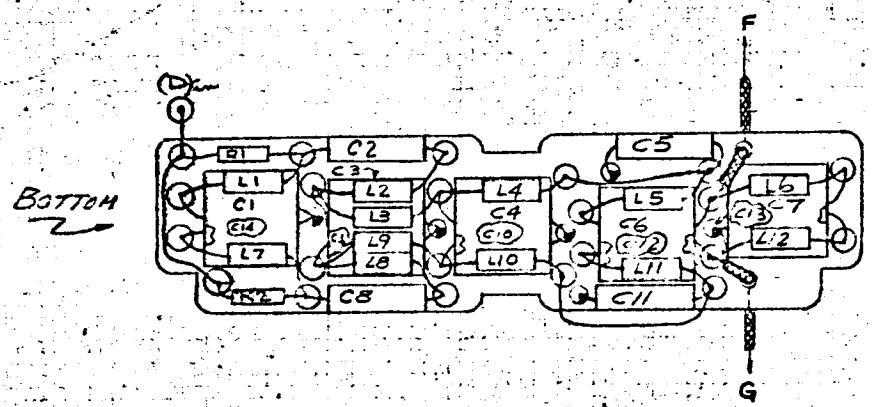

UNIT #2

4	SWD-33,000	WEE-DUCTOR	33 mh CHOKE	L3,4,9,8,10
4	SWD-18,000	{	18 mh {	L2, 5,8 & 11
4	SWD-22,000	WEE-DUCTOR	22 mh CHOKE	L1,L6,7 & L12
6	CYFM30C122J		8200 PF CAP.	C3,4,C5,C9 10 & C11
4	CYFM30C912J		9100 PF CAP	C1,7,13 & C14
4	CYFM30C622J		6200 PF CAP	C2,C8,C6 & C12
2			470Ω RESISTOR	R1 & R2
NO. REQD	MFG OF STL PART NO.	MFG	DESCRIPTION	REF DESIG

ORIGINATOR	DATE	TITLE	ENGINEERING SKETCH
D. E. Anderson	12/3/03	FILTER 18.297 KHZ	SPACE TECHNOLOGY LABORATORIES, INC. LOS ANGELES, CALIFORNIA
			SK A1130[illegible]
MJO 4126-01-02			SHEET OF

STL F[illegible] Rev. 2-90)

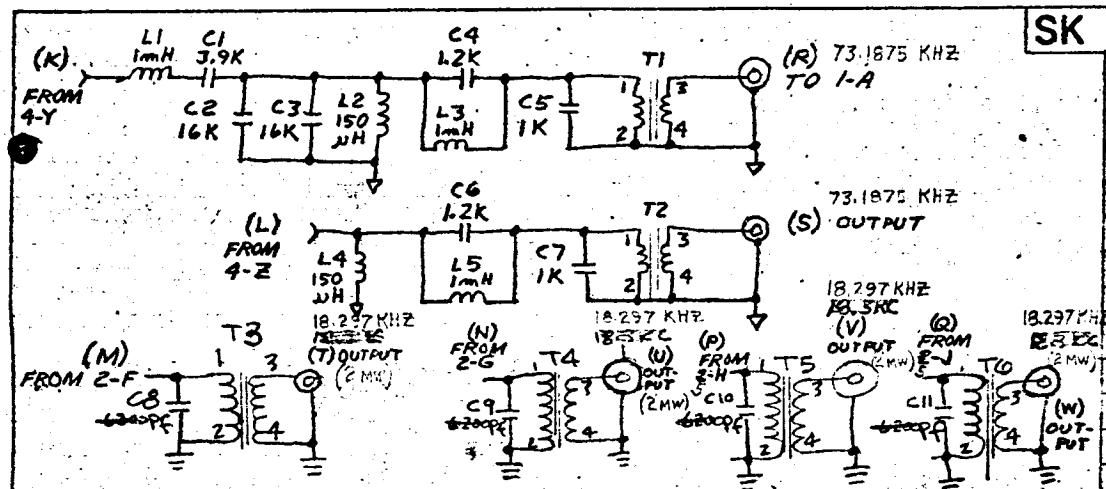

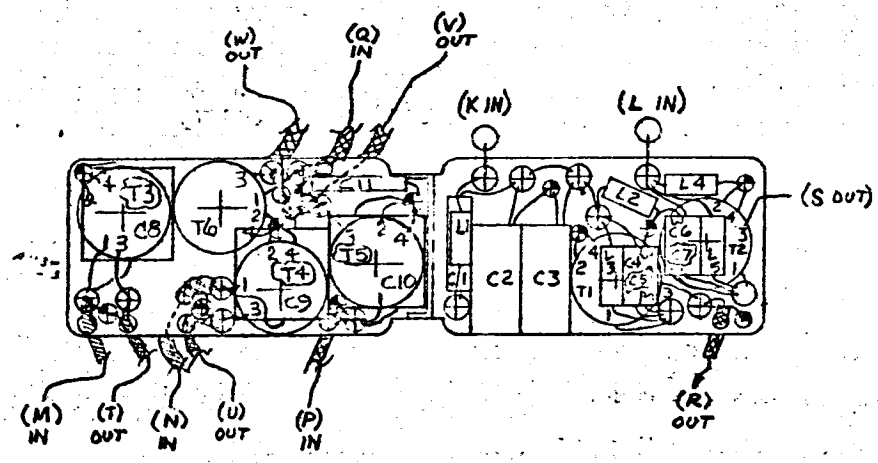

T1,2
PRI. 230T #34
SEC. 72T #30

T3,4,5,6
PRIM = 400T #34
SEC = 68T #32

SK

NO. REQD	MFR OR STL PART NO.	MFR	DESCRIPTION	SYM
17	4873-062	LERCO	TERMINAL, INSUL.	○
12	ET2064	STL	TERMINAL, GRD	⊖
6	55120-W4	MAG. INC.	TRANSFORMER	T1,2,3,4,5,6
2	SWD-150	ESSEX SUPER WEE-DUCTOR	150μH INDUCTOR	L2,4
3	SWD-1,000	ESSEX SUPER WEE-DUCTOR	1mH INDUCTOR	L1,3,5
4	CYFM30C622J	CORNING	6200 PF - ① 10K pf - ② CAPACITOR	C8,9,10,11
2	CYFM15C102J	CORNING	1KPF	C5,7
2	CYFM15C122J	CORNING	1.2KPF	C4,6
2	DM-30-163J	ELMENCO	16KPF	C2,3
1	CYFM20C392J	CORNING	3.9KPF CAPACITOR	C1

ORIGINATOR: MJO
DATE:
TITLE: FILTERS 73.1875 KHZ & 18.297 KHZ

ENGINEERING SKETCH
SPACE TECHNOLOGY LABORATORIES, INC.
LOS ANGELES, CALIFORNIA
SK 11300-3
SHEET OF

STL Form 5238 (Rev. 2-59)

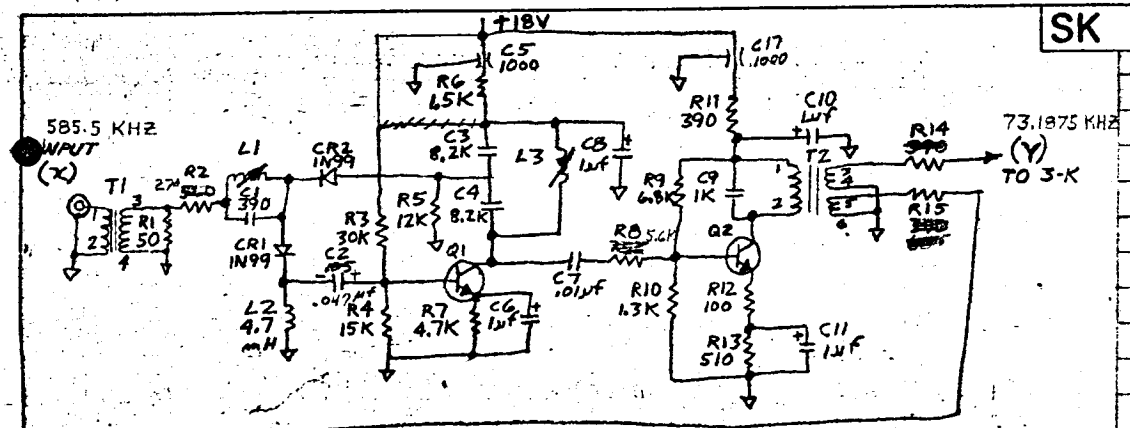

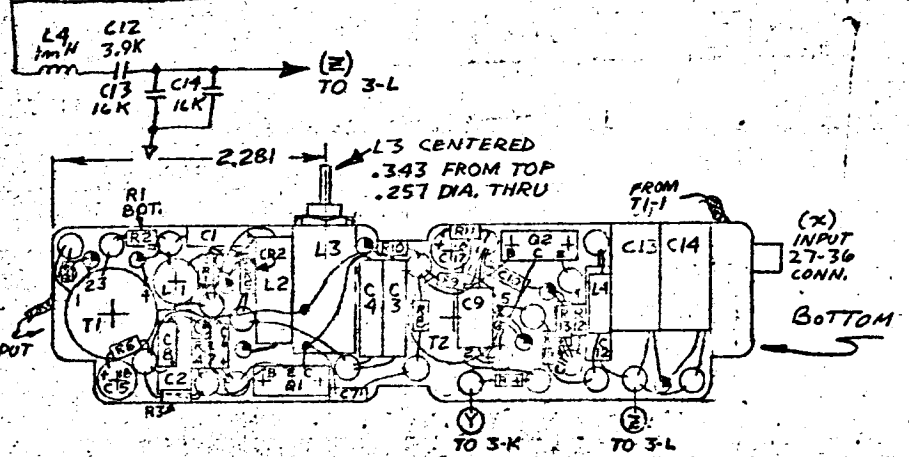

T1		T2	
T68-3	MICROMETALS	MAG INC	55120-W4
PRI	75T #30	230T	#34
SEC	75T #30	94T	#34 Bifi

SK

		CHG LTR			
1				390Ω RESISTOR	R11
1	SWD-1000	ESSEX		1 mh super-wea ductor	L4
1	~~4313~~ 4413	MILLER			L3
1	~~REC-L 4700~~ SWD-4700	ACDC ESSEX		~~4700 mH~~ 4.7 mh	L2
1	4315	MILLER			L1
2	1N99	PACIFIC-SEMI		DIODE	CR1, 2
1	CYFM20C392J	CORNING		3.9KPF CAPACITOR	C12
23	4073-062	LERCO		TERMINAL, INSUL	
2	DM-30-163 J	ELMENCO		16KPF CAPACITOR	C13,14
9	ET-2064	STL		TERMINAL, GRD	
1	CYFM15C102J	CORNING		1000 PF CAPACITOR	C9
1	VK30CW103K	VITRAMON		.01 µf	C7
4	150D-1µf	SPRAGUE		1 µf	C6,8,10,11
2	FA5C-102W	ALLEN/BRADLEY		1000 PF	C5,17
2	CYFM30C822J 150D-.047µf	CORNING		8200 PF	C3,4
1	~~VK30CW503K~~	~~VITRAMON~~ SPRAGUE		~~[illegible]~~ .047µf	C2
1	CYFM15C391J	CORNING		390 PF CAPACITOR	C1
2	2N2219	MOTOROLA		TRANSISTOR	Q1, 2
1				510Ω RESISTOR	R13
1				100Ω	R12
~~3~~ 2				~~390Ω~~ 680-① R15 200-② R14 270-② R15 390-① R14	R14,15
1				1.3K	R10
1				6.8K	R9
1				~~[illegible]~~ 5.6K	R8
1				4.7K	R7
1				1.5K	R6
1				15K	R4
1				30K	R3
1				12K	R5
1				50Ω	R1
1				~~[illegible]~~ 270Ω RESISTOR	R2

ORIGINATOR	DATE	TITLE	ENGINEERING SKETCH
L. L. FREED		n/8 DIVIDER 585.5 KHZ - 73.1875 MHZ	SPACE TECHNOLOGY LABORATORIES, INC. LOS ANGELES, CALIFORNIA
MJO			SK A-11300-4
			SHEET OF

STL Form 5238 (Rev. 2-59)

SK | CHG LTR

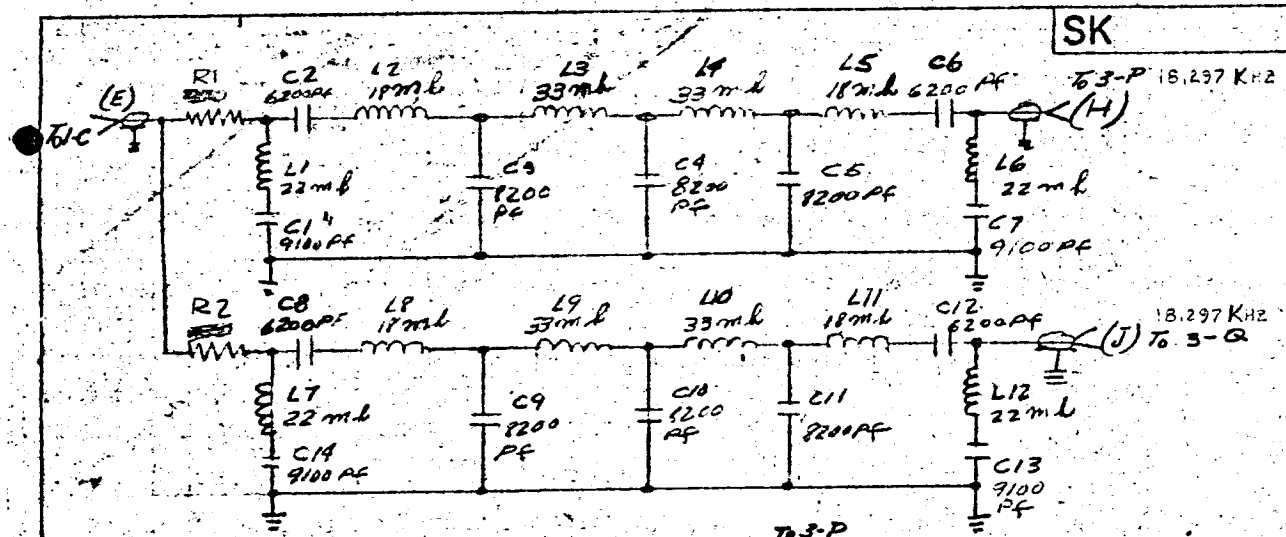

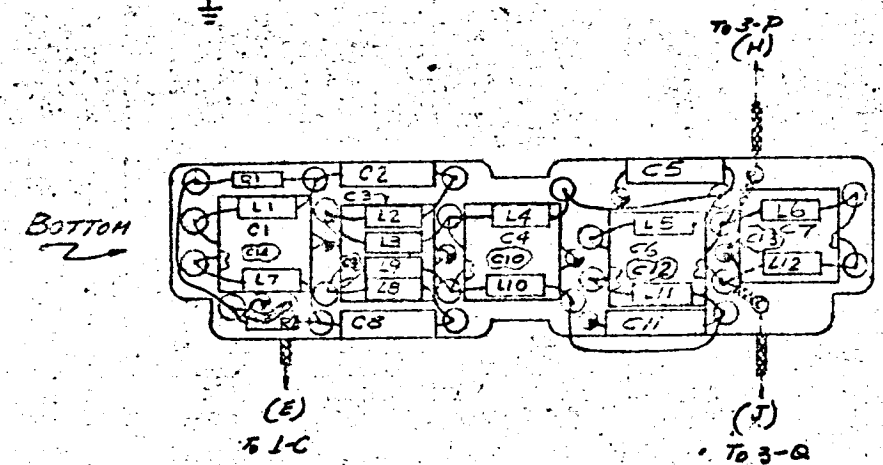

1			470Ω - ① 180Ω - ② RESISTOR	R1
4	SWD-33,000	WEE-DOCTOR	33 mh CHOKE	[illegible]
4	SWD-18,000	{	18 mh {	[illegible]
4	SWD-22,000	WEE-DOCTOR	22 mh CHOKE	[illegible]
6	CYFM30C122J		8200 PF CAP.	[illegible]
4	CYFM30C912J		9100 PF CAP	[illegible]
4	CYFM30C622J		6200 PF CAP	C2, C8, C6, C12
2			470Ω RESISTOR	[illegible]
NO. REQD	MFG OF STD PART NO	MFG	DESCRIPTION	REF DESIG

ORIGINATOR	DATE	TITLE	ENGINEERING SKETCH
[illegible]	[illegible]/03	FILTER 18.297	SPACE TECHNOLOGY LABORATORIES, INC. LOS ANGELES, CALIFORNIA
MJC 4126-01-02			SK A11300-5
			SHEET OF

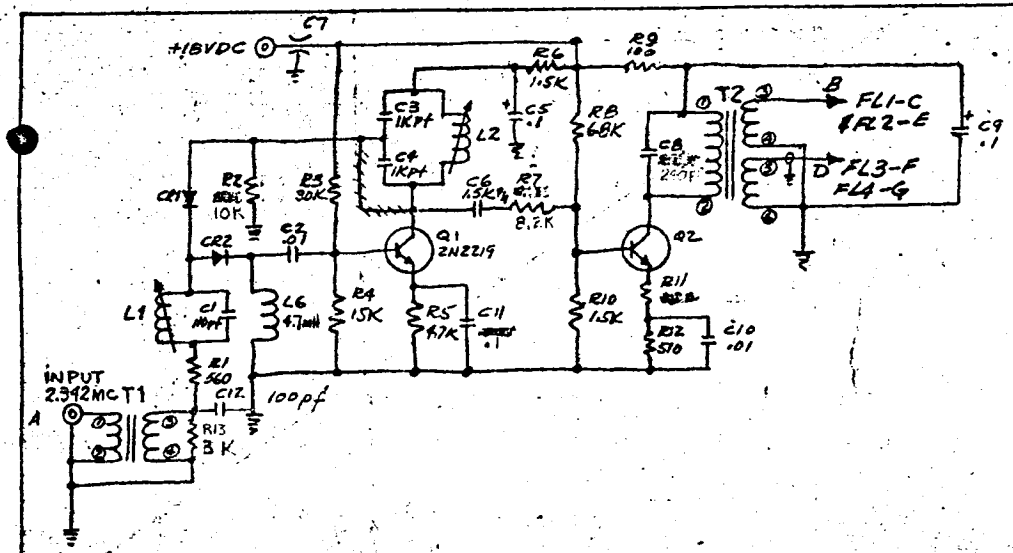

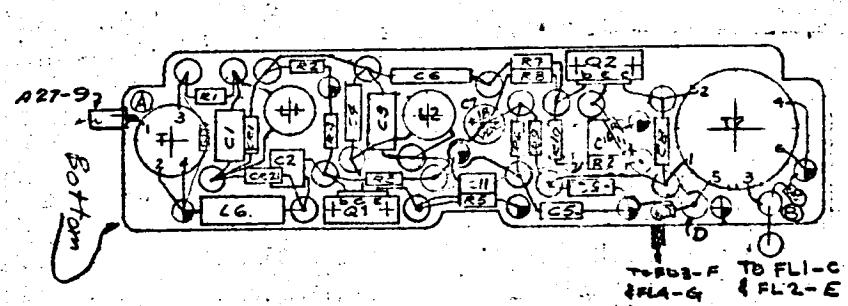

T1

PRIM - 13T 30 GAGE WIRE, SEC 75T 30 GAGE WIRE.

T2

PRIM - 100T 26 GAGE WIRE, SEC 37T 26 GAGE WIRE.
(37-T EACH WOUND BIFILAR)

SK | CHG LTR

NO REQD	MFR OR STL PART NO.	MFR	DESCRIPTION	SYM
			3.0K RESISTOR	R13
22			TERMINAL INSULATED	
7			TERMINAL GRD	⊕
1	ACDC		4.7MH	L6
1	4314	MILLER		L2
1	4313	MILLER		L1
1			15K RESISTOR 1/4W ±5%	R4
1	T80-3	MICRO METALS	COIL FORM	T2
1	T50-2	MICRO METALS	COIL FORM	T1
1	CYFM10C101J	CORNING	100 pf CAPACITOR	C12
2	1N99	HUGHES	SEMICONDUCTORS	CR1 & CR2
1	MCBOV104AM	AEROVOX	.1μf CAPACITOR	C11
2	2N2219	MOTOROLA	TRANSISTOR	Q1 & Q2
~~1~~	~~VK30CW102J~~	~~VITRAMON~~	~~.001 μf~~	~~C11~~
1	CYFM15C241J	CORNING	240 pf CAPACITOR	C8
1	FA5C-102W	ALLEN BRADEY	.001μf	C7
1	CYFM20C152J	CORNING	1.5K pf	C6
2	150D	SPRAGUE	.1μf	C5 & C9
2	CYFM15C13J	CORNING	1Kpf	C3 & C4
2	VK306CW103K	VITRAMON	.01μf	C2 & C10
1	CYFM10C111J	CORNING	110pf CAPACITOR	C1
1			8.2K RESISTOR 1/4W ±5%	R7
1			510 RESISTOR 1/4W ±5%	R12
1			51Ω -② 68Ω -①	R11
1			100	R9
1			6.8K	R8
2			1.5K	R6 & R10
2			4.7K	R5 & [illegible]
1			30K	R3
1			10K	R2
1			560 RESISTOR 1/4W ±5%	R1

ORIGINATOR: LARRY PRICE | DATE: 11/1/63

TITLE: FREQUENCY ~~DRIVER~~ (N/4) DIVIDER

MJO 4126-01-01

ENGINEERING SKETCH
SPACE TECHNOLOGY LABORATORIES, INC.
LOS ANGELES, CALIFORNIA

SK A-11301-1

SHEET 1 OF 2

STL Form 523B (Rev. 2-59)

SK | CHG LTR

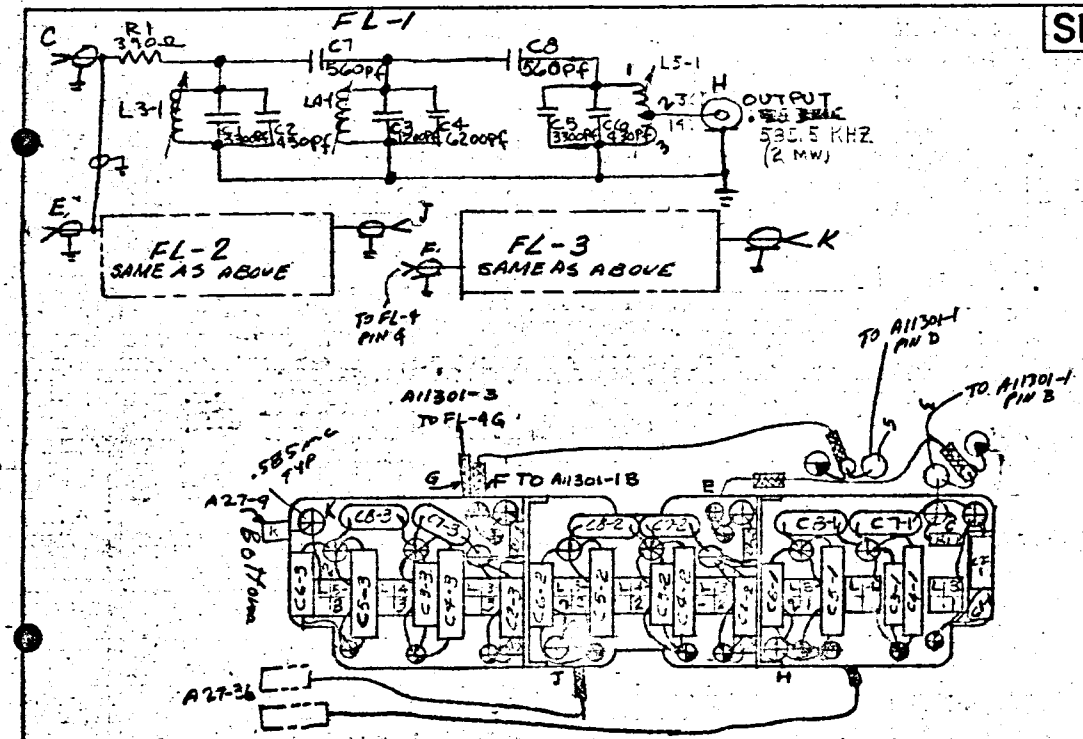

L3-1,2&3 50T #36

L4-1,2&3 33T #36

L5-1,2&3 50T #36 TAP 36T

NO REQD	MFR OR STL PART NO	MFR	DESCRIPTION	SYM
15	4073-062	LERCO	TERMINAL, INSULATED	
11	ET2064	STL	TERMINAL GRD	⊕
6	26-003F	MICRO METALS	CORE	
6	A-11021	STL	COIL FORM	L3-1,2&3 L4-1,2&3 L5-1,2&3
3			RESISTORS 390Ω ¼W ± 5%	R1-1,2&3
6	HRDM-15-561J	ELMENCO	CAPACITOR 560PF SILVER MICA (DT4-1003)	C7-1,2&3 C8-1,2&3
6	CYFM15C431J	CORNING	CAPACITOR 430 PF	C2-1,2&3 C6-1,2&3
3	CYFM30C622J	↕	6.2KPF	C4-1,2&3
3	CYFM15C122J		1.2KPF	C3-1,2&3
~~3~~	~~CYFM20C432J~~		~~4.3KPF~~	~~C2-1,2&3~~
6	CYFM20C332J	CORNING	CAPACITOR 3.3KPF	C1-1,2,3 C5-1,2&3

ORIGINATOR	DATE	TITLE	ENGINEERING SKETCH
D.E. Anderson		FILTER 585.5 KHZ	SPACE TECHNOLOGY LABORATORIES, INC. LOS ANGELES, CALIFORNIA
MJO			SK A-11301-2
			SHEET OF

STL Form 5213 (Rev. 2-59)

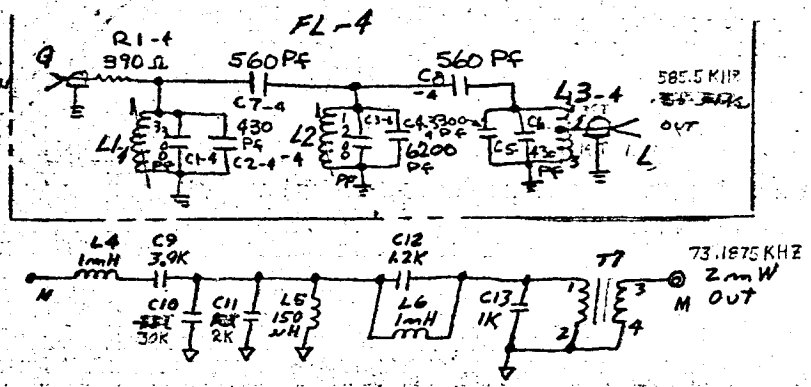

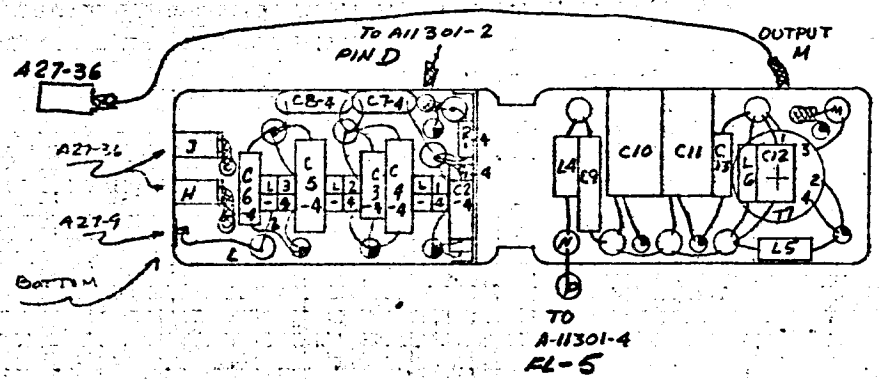

T1
PRI. 230T #34
SEC 72T #30

L1
50T #36
CORE
MICROMETALS
26-003F

L2
33T #36
CORE
MIC/MET
26-003F

L3
50T #36 TAP 36T
CORE
MIC/MET
26-003F

SK

NO. REQD.	MFR OR STL PART NO.	MFR	DESCRIPTION	SYM
12	4073-062	LERCO	TERMINAL, INSUL.	
8	ET2064	STL	TERMINAL, GRD	
1	55120-W4	MAG. INC	TRANSFORMER	T1-4
1	SWD-150	ESSEX SUPER WEE-DUCTOR	150 μH INDUCTOR	L5
2	SWD-1000	ESSEX SUPER WEE-DUCTOR	1mH INDUCTOR	L4,6
3	A-11021	STL	COIL FORM	L1,2,3-4
1	DM42-303J	ELMENCO	30 K CAPACITOR	C10
1	CYFM15C102J	CORNING	1K PF CAPACITOR	C13
1	CYFM15C122J	CORNING	1.2KPF	C12
~~2~~	~~HRDM-30-163J~~	~~ELMENCO~~	~~16KPF~~	~~C10,11~~
1	CYFM30C392J	CORNING	3.9KPF	C9
2	HRDM-15-561J	ELMENCO	560PF	C7,8-4
1	CYFM-30C622J	CORNING	6.2KPF	C4-4
1	CYFM15C122J	CORNING	1.2KPF	C3-4
2	CYFM15C431J	CORNING	430PF	C2-4 C6-4
2	CYFM20C332J	CORNING	3.3KPF CAPACITOR	C1,5-4
1	DM19-202J	ELMENCO	2 K CAPACITOR	C11
1			390 Ω RESISTOR	R1-4

ORIGINATOR	DATE	TITLE	ENGINEERING SKETCH
		FILTER 585.5 KHZ & 73.1875 KHZ	SPACE TECHNOLOGY LABORATORIES, INC. LOS ANGELES, CALIFORNIA
MJO			SK A11301-3
			SHEET OF

STL Form 523B (Rev. 2-59)

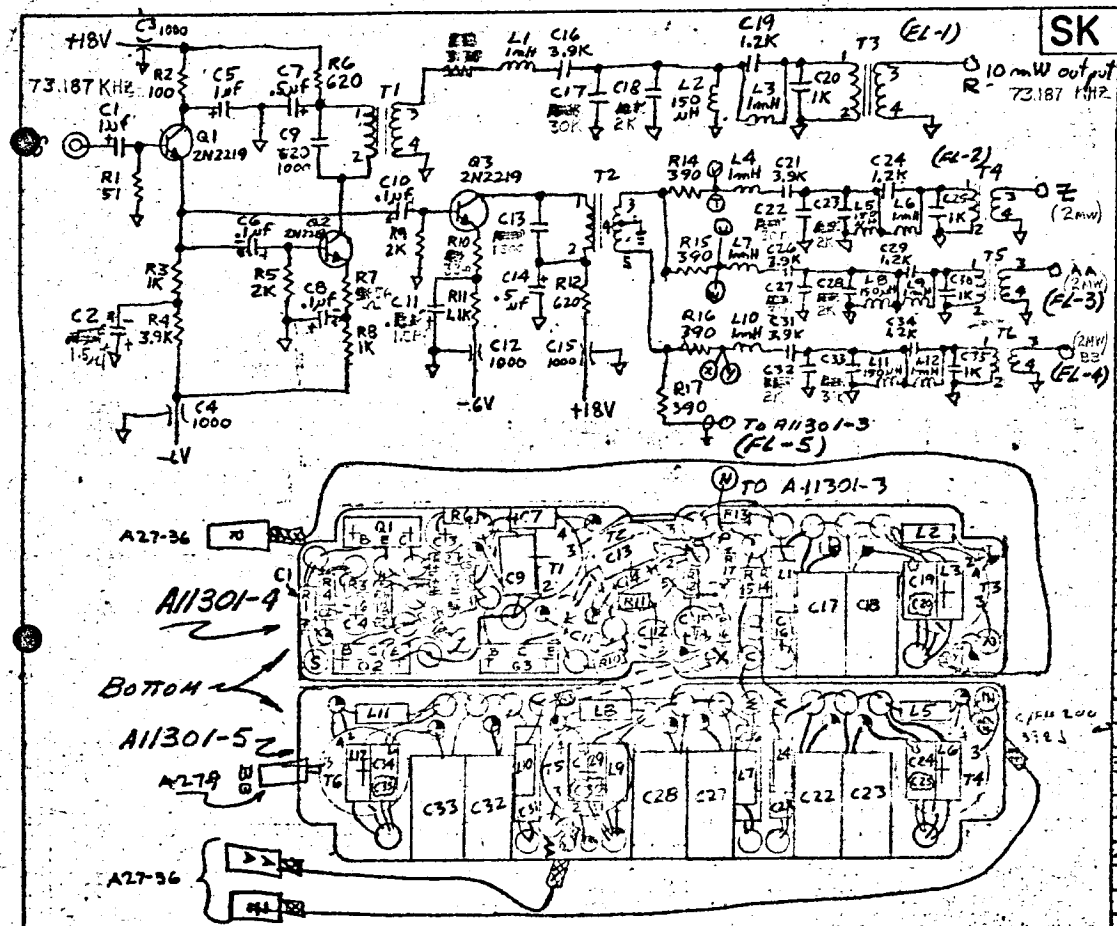

4	DM42-303J	ELMENCO	30K Pf CAPACITOR	C17, C22, C24, C33
4	DM19-202J	ELMENCO	2K Pf	C18, C23, C1, C32
49	4073-062	LERCO	TERMINAL, INSUL. ST/OFF	
21	ET2064	STL	TERMINAL, GRD	
2	150D155X002042	SPRAGUE	1.5 µf CAPACITOR	C2, C4
6	55120-W4	MAG. INC.	TRANSFORMER T1,T2	T3,4,5,6
~~2~~	~~55930-W4~~	~~MAG. INC.~~	~~TRANSFORMER~~	~~T1,2~~
3	A-11022	STL	HEAT SINK, BORON NITRATE	
1	CYFM20C152J	CORNING	1500 Pf CAPACITOR	C13
1			1.5 µf	C2
4	FA5C-102W	ALLEN/BRADLEY	1000 Pf CAPACITOR	C3,4,12,15
4	CYFM15C102J	CORNING	1000 Pf CAPACITOR	C20,25,30,35
3	2N2219	MOTOROLA	TRANSISTOR	Q1,2,3
5	SWD-150	ESSEX	150 µH CHOKE	L2,5,8,11
10	SWD-1000	ESSEX	1mH "	L1,3,4,6,7,9,10,12
8	DM-30-163J	ELMENCO	16 K Pf CAPACITOR	C13,15,22,23,27,28,32,33
4	CYFM15C122J	CORNING	1.2K Pf	C19,24,29,34
4	CYFM20C392J	CORNING	3.9K Pf	C16,21,26,31
6	CYFM15C102J	CORNING	1000 Pf - ① 680 pf - ②	C[illegible]
~~1~~	~~CYFM15C62N~~	~~CORNING~~	~~620 Pf~~	~~C9~~
2	150D-.5µf	SPRAGUE	.5µf	C7,14
4	150D-.1µf	SPRAGUE	.1µf	C8,6,8,10,11
2	150D-1µf	SPRAGUE	1µf CAPACITOR	C1,5
4			390 Ω RESISTOR	R13,14,15,16,17
1			1.1K	R11
1			33 Ω	R10
1			56 Ω - ① 62 Ω - ②	R7
2			620 Ω	R6,12
2			2K	R5,9
1			3.9K	R4
2			1K	R3,8
1			100 Ω	R2
1			51 Ω RESISTOR	R1
No Req	PART No	MFR or STL	DESCRIPTION	SYM.

ORIGINATOR J.E. Anderson Jr	DATE 11/8/63	TITLE 73.187 MHZ PWR DIV	ENGINEERING SKETCH SPACE TECHNOLOGY LABORATORIES, INC. LOS ANGELES, CALIFORNIA
MJO			SK A11301-4&5
			SHEET OF

T1
PRI. 230T #34
SEC. 72T #30

T2
230T #34
70T BI-FILAR #30

T3,4,5,6
230T #34
72T #30

SK CHG LTR

STL Form 523B (Rev. 2-59)

SK | CHG LTR

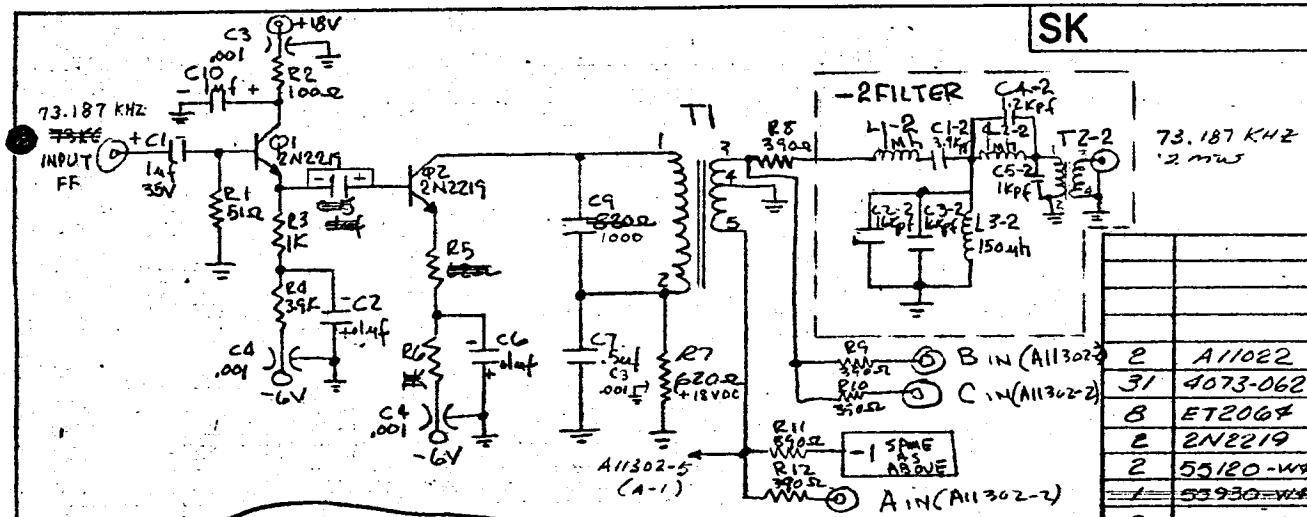

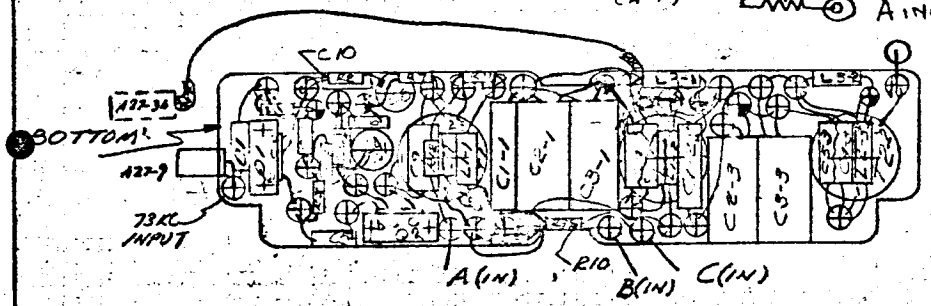

T1 230T #34
PRI - ~~173T #30~~
SEC - 63T #30 (BIFILAR)

T2-1 & T1-2
PRI 230T #34
SEC 72T #30

NO REQD	PART Nº	MFR	DESCRIPTION	SYM
2	A11022	STL	HEAT SINK	
31	4073-062	LERCO	TERMINAL, INSUL	⊕
8	ET2064	STL	TERMINAL, GRD	⊕
2	2N2219	MOTOROLA	TRANSISTOR	Q1, Q2
2	55120-W4	MAG. INC	CORE T1	T2-1-2
~~1~~	~~55930-W4~~	~~MAG. INC~~	~~CORE~~	~~T1~~
2	SWD-150	WEE-DUCTORS	150uh CHOKE	L3-1-2
4	SWD-1000	WEE-DUCTORS	1mh CHOKE	L1-1-2 L2-1-2
2	CYFM15C102J	CORNING	1KPf C9	C5-1, C5-2
2	CYFM15C122J	CORNING	1.2KPf CAPACITOR	C4-1 C4-2
4	HRDM-30-163J	ELMENCO	16KPf	C2-1-2 C3-1-2
2	CYFM20C392J	CORNING	3.9 KPf	C1-1, C1-2
~~1~~	~~CYFM15C82N~~	~~CORNING~~	~~820Pf~~	~~C9~~
1	150D-.5uf	SPRAGUE	.5uf	C7
3	FA5C-102W	ALLEN/BRADLEY	.001uf STAND-OFF	C3, C4, C8
3	150D-.1uf	SPRAGUE	.1uf	C2, C5, C6
2	150D-1uf	SPRAGUE	1uf 35V CAPACITOR	C1, C10
5			390Ω RESISTOR	R8, R9, R10, R11, R12
1			620Ω	R7
1			62Ω	R5
1			3.9K	R4
2			1K	R3, R6
1			100Ω	R2
1			51Ω RESISTOR	R1

ORIGINATOR J.E. Anderson Jr. | DATE 11/18/63 | TITLE 73.187 KHZ POWER DIVIDER

ENGINEERING SKETCH
SPACE TECHNOLOGY LABORATORIES, INC.
LOS ANGELES, CALIFORNIA

SK A11302-1

MJO 4126-01-01

SHEET OF

STL Form 523B (Rev. 2-59)

SK | CHG LTR

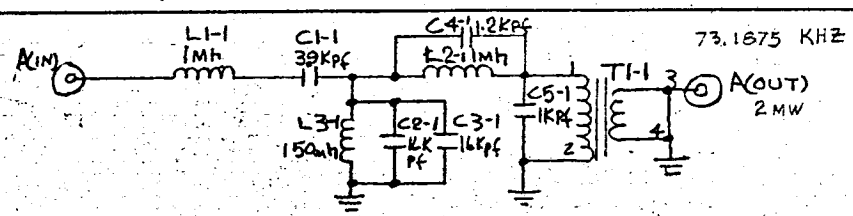

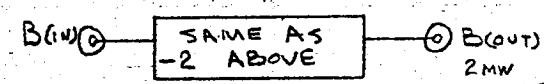

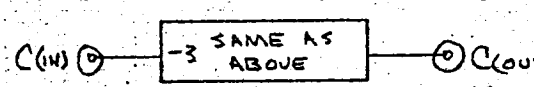

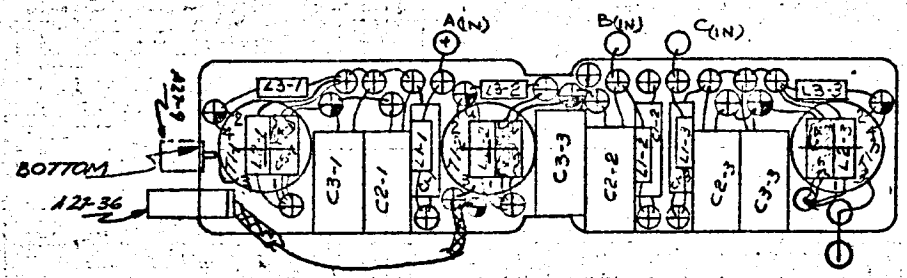

T1-1-2-3
PRI - 230T #34
SEC - 72T #30

NO REQD	PART Nº	MFR	DESCRIPTION		SYM
24	4073-062	LERCO	TERMINAL, INSUL		⊕
9	ET2064	STL	TERMINAL, GRD		⊕
3	55120-WA	MAG INC.	CORE		T1-1-2-3
3	SWD-150	WEE-DUCTORS	150uh	CHOKE	L3-1-2-3
6	SWD-1000	WEE-DUCTORS	1Mh	CHOKE	L1, L2-1, L2-2
3	CYFM15C102J	CORNING	1KPf	CAPACITOR	C5-1-2-3
3	CYFM15C122J	CORNING	1.2K pf	CAPACITOR	C4-1-2-3
6	HRDM-30-163J	ELMENCO	16 KPf	CAPACITOR	C2-1-2-3, C3-1-2-3
3	CYFM20C392J	CORNING	3.9 KPf	CAPACITOR	C1-1-2-3

ORIGINATOR: E.E. Anderson, Jr. | DATE: 11/12/68 | TITLE: FILTER 73.1875 MHZ

MJO 4126-01-01

ENGINEERING SKETCH
SPACE TECHNOLOGY LABORATORIES, INC.
LOS ANGELES, CALIFORNIA

SK A11302-2

SHEET OF

STL Form 5238 (Rev. 2-69)

SK | CHG LTR

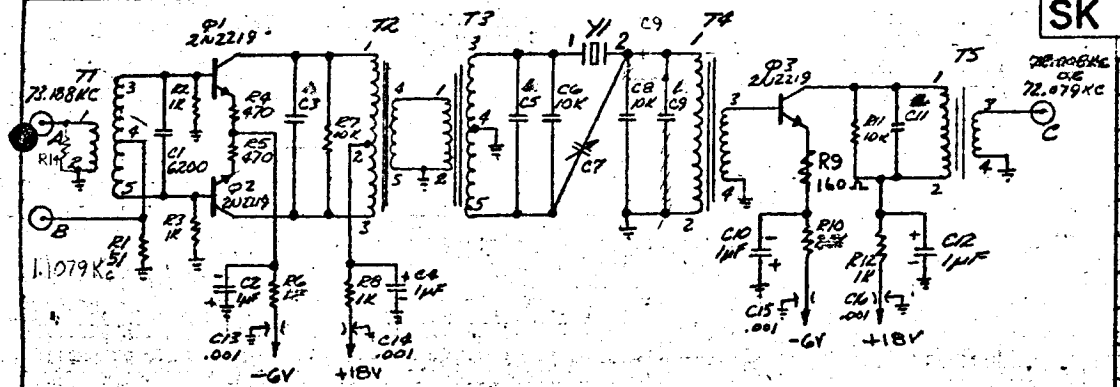

▲ SELECT FOR RESONANCE

NOTE:

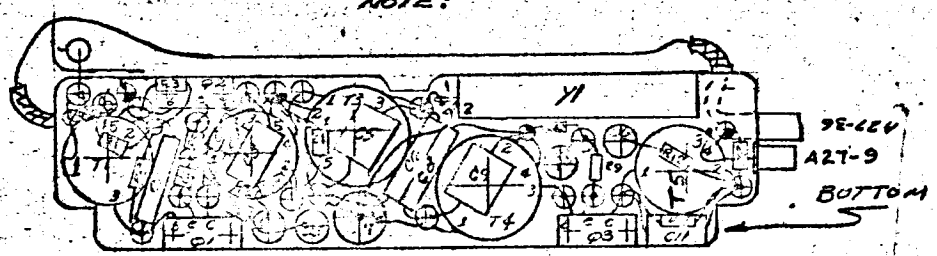

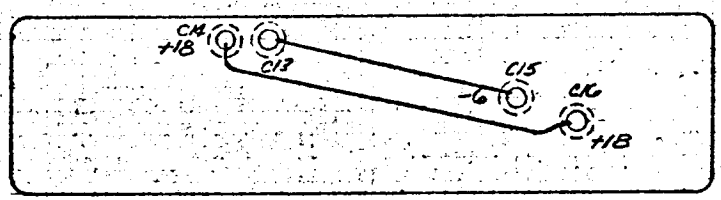

T1, PRI - 40T #30
SEC - 200T #30 CT

T2, PRI - 400 T #30 CT
SEC - 32T #30

T3, PRI - 16T #30
SEC - 160T #30 CT

T4, PRI - 160T #30
SEC - 75T #30

T5, PRI-400T #30
SEC - 30T #30

NO REQD	MFR OR STL PART NO	MFR	DESCRIPTION	SYM
1			82Ω - ① RESISTOR	R14
19	4073-062	LERCO	TERMINAL INSUL.	⊕
4	ET2064	STL	TERMINAL GRD	⊕
3	A-11022	STL	HEAT SINK	
1			CRYSTAL	Y1
3	2N2219	MOTOROLA	TRANSISTOR	Q1,2,3
2	55120	MAGNETICS	CORE, XFMR	T2, T5
2	T80-3	MICRO METALS	CORE, XFMR	T3, T4
1	T68-3	MICRO METALS	CORE, XFMR	T1
4	FA5C-102W	ALLEN BRADLEY	FEED THRU CAPACITOR	C13,14,15,16
1	2950	JOHANSON	ADJ CAPACITOR	C7
2	CYFM30C103J	CORNING	10K	C6, 8
1		CORNING	SELECT FOR RESONANCE ▲ 330 PF -(1) 270 PF -(2)	C11
1		CORNING	470 PF -① 390 PF -②	C9
1		CORNING	680 PF	C5
			SELECT FOR RESONANCE ▲	C3
4	150D	SPRAGUE	1µF	C2,4,10,12
1	CYFM30C622J	CORNING	6200 PF CAPACITOR	C1
			4.3K -(1) 10K -(2) RESISTOR	R6
1			2.2K RESISTOR	R10
1			160Ω	R9
2			10K	R7, 11
2			470Ω	R4, 5
5			1K	R2,3,8,12
1			51Ω RESISTOR	R1

ORIGINATOR: Ponce de Leon | DATE: 15 Nov 65

TITLE: MIXER

ENGINEERING SKETCH
SPACE TECHNOLOGY LABORATORIES, INC.
LOS ANGELES, CALIFORNIA

SK A-11302-3

SHEET OF

MJO 4126-01-01

STL Form 528B (Rev. 2-59)

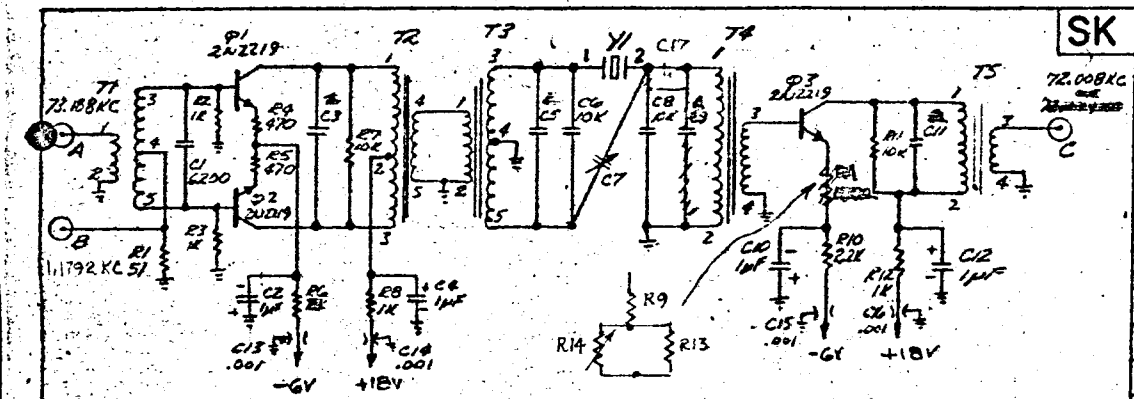

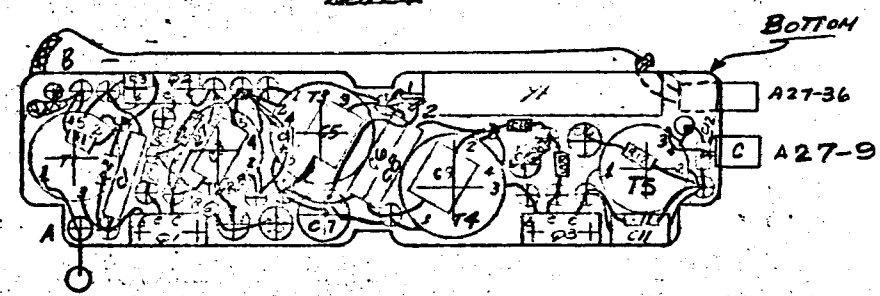

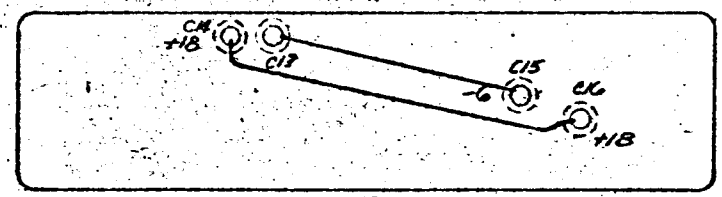

T1, PRI - 40T #30
SEC - 200T #30 CT

T2, PRI - 400T #30 CT
SEC - 32T #30

T3, PRI - 16T #30
SEC - 160T #30 CT

T4, PRI - 160T #30
SEC - 75T #30

T5, PRI - 400T #30
SEC - 30T #30

SK | CHG LTR

NO REQD	MFR OR STL PART NO	MFR	DESCRIPTION	SYM
1	33R1	GLENNITE	THERMISTOR	R14
1			RESISTOR 200Ω -① 470Ω -②	R13
19	4073-062	LERCO	TERMINAL INSUL	⊕
4	ET2064	STL	TERMINAL GRD	⊕
3	A-11022	STL	HEAT SINK	
1			CRYSTAL	Y1
3	2N2219	MOTOROLA	TRANSISTOR	Q1,2,3
2	55120	MAGNETICS	CORE, XFMR	T2, T5
2	T80-3	MICRO METALS	CORE, XFMR	T3, T4
1	T68-3	MICRO METALS	CORE, XFMR	T1
1		CORNING	CAPACITOR 750Pf -① 360Pf -②	C17
4	FA5C-102W	ALLEN BRADLEY	FEED THRU CAPACITOR	C13,14,15,16
1	2950	JOHANSON	ADJ CAPACITOR	C7
2	CYFM30C103J	CORNING	10K	C6, 8
1			~~SELECT FOR RESONANCE~~ 330Pf -① 200Pf -②	C11
1			220 Pf -②	C9
1			330 Pf -②	C5
			~~SELECT FOR RESONANCE~~	C3
4	150D	SPRAGUE	1μF	C2,4,10,12
1	CYFM30C622J	CORNING	6200Pf CAPACITOR	C1
1			4.3K -① 5.6K -②	R6
1			~~2.2K~~ 1.3K -① 1.5K -② RESISTOR	R10
1			~~[illegible]~~ 27Ω -① 10Ω -②	R9
2			10K	R7, 11
2			470Ω	R4, 5
~~5~~4			1K	R2,3,8,12
1			51Ω RESISTOR	R1

ORIGINATOR: Bruce de Leon
DATE: 15 Nov 65
TITLE: MIXER
MJO 4126-01-01

ENGINEERING SKETCH
SPACE TECHNOLOGY LABORATORIES, INC.
LOS ANGELES, CALIFORNIA

SK A-11302-4
SHEET OF

SK

CHG LTR

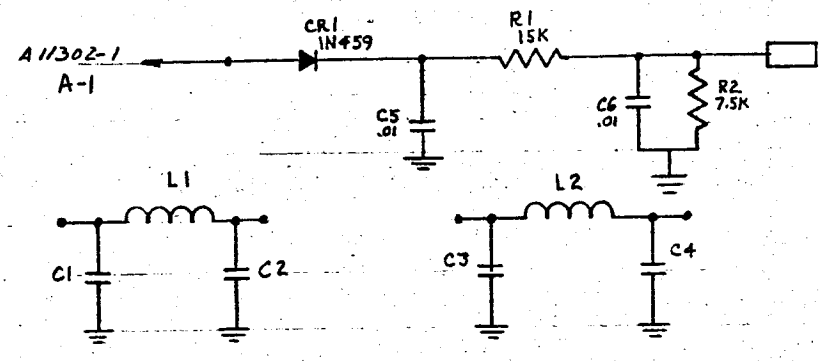

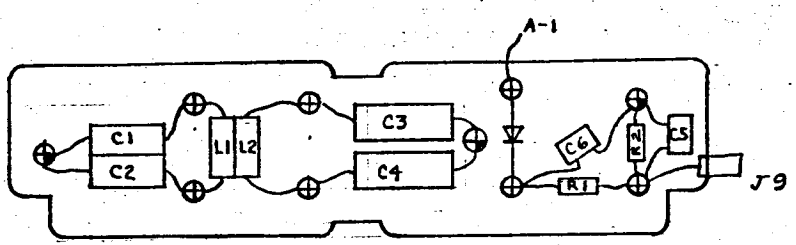

NO REQD	MFR OR STL PART NO	MFR	DESCRIPTION		SYM
2	7034	VANGUARD	22 mh	INDUCTOR	L1, L2
1			IN459	DIODE	CR1
2	VK306CW103K	VITRAMON	.01 uf	CAPACITOR	C5, C6
4		SPRAGUE	4.7 uf	CAPACITOR	C1, C2, C3, C4
1			7.5K	RESISTOR	R2
1			15K	RESISTOR	R1

ORIGINATOR	DATE 1-27-63	TITLE	ENGINEERING SKETCH SPACE TECHNOLOGY LABORATORIES, INC. LOS ANGELES, CALIFORNIA
V.F. STEWART		MIXER	SK A11302-5
MJO 4126-01-01			SHEET 5 OF 5

STL Form 523B (Rev. 2-59)

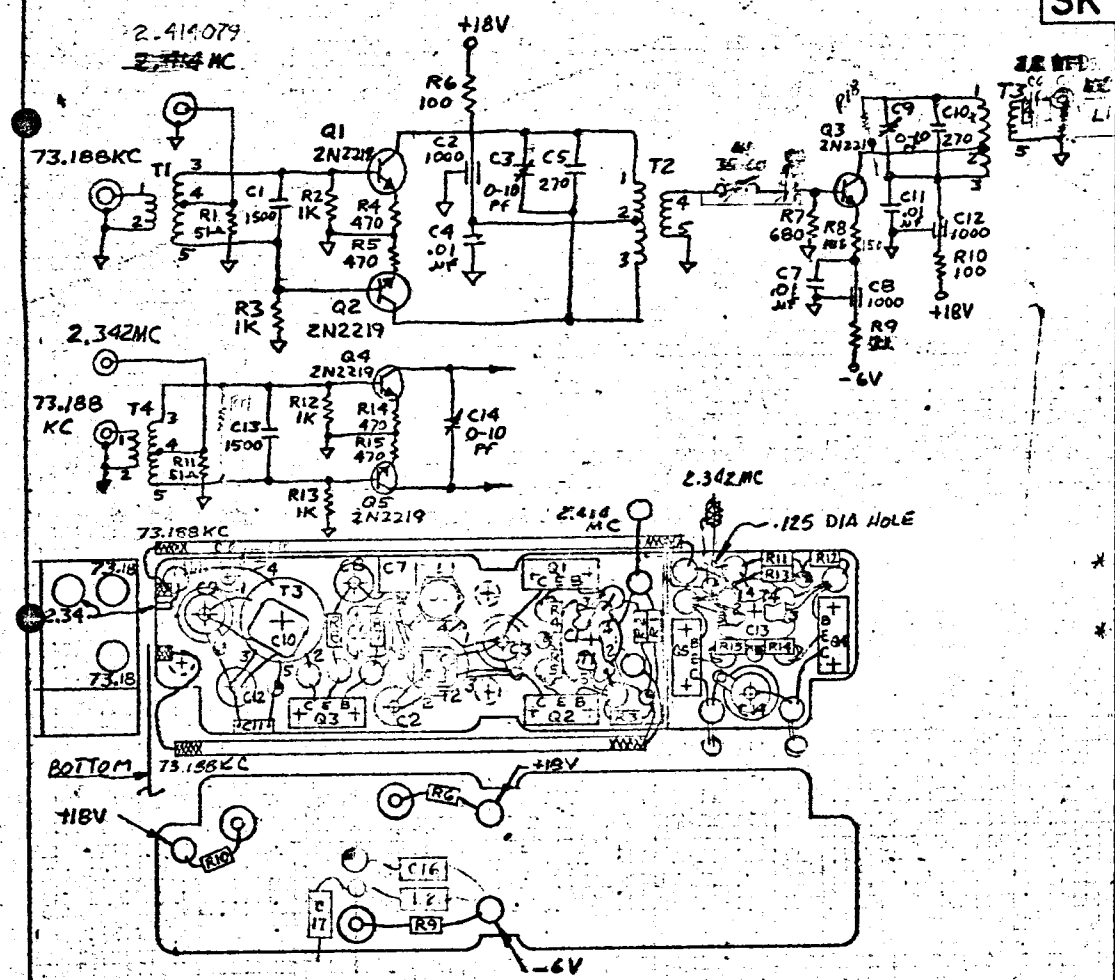

T1, T4
48T CT #30 270°
8T EINK #30 45°

T2
60T CT #30 270°
6T EINK #30 45°

T3
60T TAPPED AT 16T
5T EINK #30

SK		CHG LTR		
	2.34089 MC			
2F2	4073-062	LERCO	TERMINAL, INSUL	
7 8	ET2064	STL	TERMINAL, GRD	
5	TO-5		HEAT SINK, BORON NITRATE	
1			33 K Ω ① RESISTOR	R18
2		VANGUARD	220 µh INDUCTOR	L2 L1
2	T50-7	MICRO METALS	TRANSFORMER	T2, T3
2	03	GENERAL CERAMICS	TRANSFORMER	T1, T4
1			1.6K - ② RESISTOR	R17
5	2N2219	MOTOROLA	TRANSISTOR	Q1,2,3,4,5
1	~~4312~~	~~MILLER~~	~~35-60 Mh~~ INDUCTOR, VARIABLE	~~L1~~
1		CORNING	1E Pf CAPACITOR	C15
1	HRDM-15-910J	ELMENCO	91 PF CAPACITOR	C6
2	HRDM-15-271J	ELMENCO	270 PF	C5, C10
3	VK30CW103J	VITRAMON	.01 µf CAPACITOR	C4,7,11
4 3	2950	JOHANSON	0-10 PF CAPACITOR, VARIABLE	C3,9,14
3	SS5A-102W	ALLEN-BRADLEY	1000 PF , STANDOFF	C2,8,12
2	HRDM-19-152J	ELMENCO	1500 PF CAPACITOR	C1, C13
2		SPRAGUE	47 µf CAPACITOR	C16, C17
1			150 Ω ① RESISTOR	R8
1			3K 1.5K ① 1.6 RESISTOR	R9
1			680 Ω	R7
3 2			100 Ω	R6, 7, 10
4			470 Ω	R4,5,14,15
4			1K	R2,3,12,13
2			51 Ω RESISTOR	R1, R11

ORIGINATOR	DATE	TITLE	ENGINEERING SKETCH
L.L. FREED	10-23-63	2.34089 MC MIXER	SPACE TECHNOLOGY LABORATORIES, INC. LOS ANGELES, CALIFORNIA
112			SK A-11303-1
MJO 4126-01-01			SHEET OF

STL Form 5238 (Rev. 2-59)

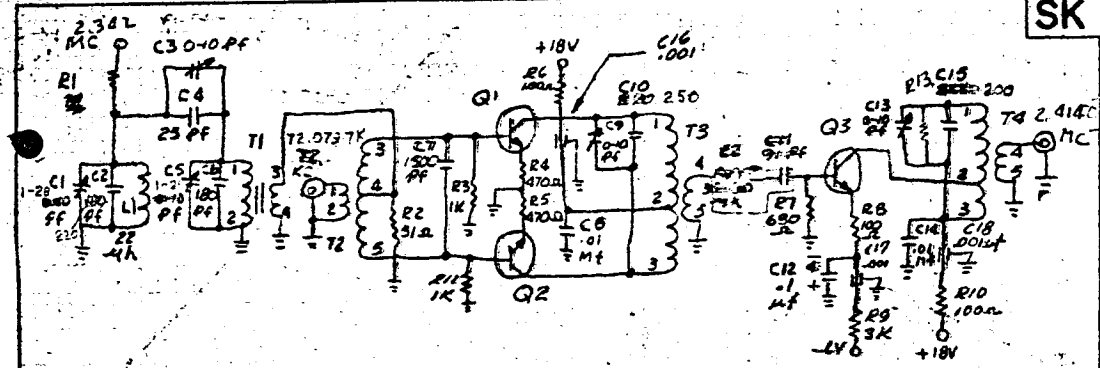

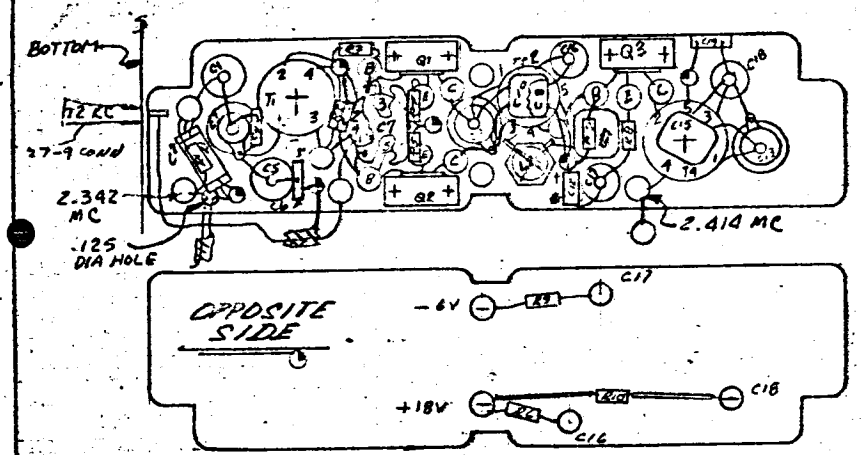

(2MW) 72.0797KC → MIXER → 2.414079MC (2MW)
(2MW) 2.342MC →

T1 PRIM 60T #30
SEC 9T #26

T2	T3	T4
48 TURNS C.T. #30 FORMVAR 270°	60 TURNS C.T. #30 FORMVAR 200°	60 TURNS TAPPED AT 16 TURNS 120°
8 TURN #30 FORMVAR 45°	6 TURN #30 FORMVAR 30°	5 TURN LINK #30 FORMVAR 30°

NO. REQD	MFR or STL PART NO.	MFR	DESCRIPTION	SYM
1			33K-② RESISTOR 1/4W	R13
1			1K-① 2K-② RESISTOR 1/2W	R7
1		EL MENCO	200 Pf CAPACITOR	C15
2	MC 603	JFD	1-28 Pf	1C, 5C
17			TERMINAL INSUL	○
7	1280B/ET2064	STL	TERMINAL GND	◐
1		CORNING	220 Pf CAPACITOR	C2
1	T50-2	MICRO METALS	TRANSFORMER	T1
2	T50-7	MICRO METALS	TRANSFORMER	T3 & T4
1	03	GEN. CERAMICS	TRANSFORMER	T2
3	A-11022	STL	HEAT SINK	
3	2N2219	MOTOROLA	TRANSISTOR	Q1, Q2 & Q3
1	15CD104A5035A2	SPRAGUE	.1µF CAPACITOR	C12
~~1~~	~~4372~~	~~MILLER~~	~~25-60µF CHOKE VARIABLE~~	~~L2~~
1	WEE 22	ESSEX	22mh	L1
~~1~~	~~HRDM-15-910J~~	~~EL MENCO~~	~~[illegible] CAPACITOR~~	~~C11~~
1	HRDM-15-271J	EL MENCO	250Pf "	C10
2	VK30CW103J	VITRAMON	.01uf "	C8 & C14
1	HRDM-19-152J	EL MENCO	1500 Pf "	C7
4	CYFM10C250J	CORNING	25 Pf "	C4
* 1	CYFM10C181J	CORNING	180 Pf "	C6
3	2950	JOHANSON	0-10 " VARIABLE	C3, C5, C9 & C13
3	FA5C-102W	ALLEN BRADLEY	.001 " FEED THRU	C16, C17 & C18
1			3K RESISTOR 1/4W 5%	R9
1			680Ω " "	R7
2			100Ω " "	R6, R8 & R10
2			470Ω " "	R4 & R5
1			51Ω " "	R2
2			1K " "	R1, R3 & R11

1			100Ω-① 510Ω-② RESISTOR	R8

ORIGINATOR L. HARRIS
DATE 10-23-63
TITLE 2.414079 MC MIXER
H-1
MJO 4126-01-01

ENGINEERING SKETCH
SPACE TECHNOLOGY LABORATORIES, INC.
LOS ANGELES, CALIFORNIA
SK A-11303-2
SHEET OF

4hRs

STL Form 523B (Rev. 2-59)

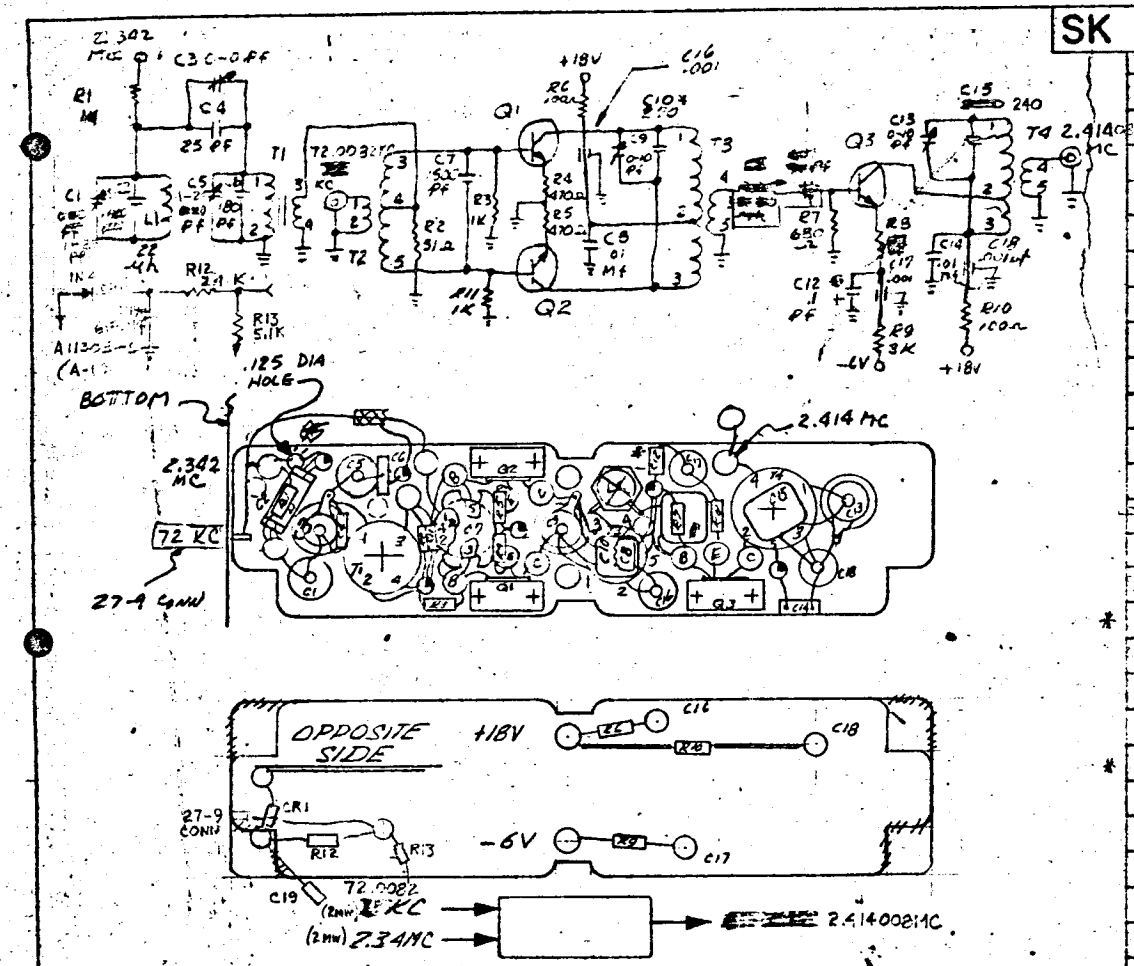

T1 PRIM 60T #30
SEC 9T #26

T2 T3 T4

48 TURNS C.T. #30 FORMVAR 270° 60 TURNS C.T. #30 FORMVAR 200° 60 TURNS TAPPED AT 16 TURNS 120°
8 TURN #30 FORMVAR 45° 6 TURN #30 FORMVAR 30° 5 TURN #30 FORMVAR 30°

1			100Ω-① 430Ω-②	RF

SK

NO. REQD	MFR or STL PART NO.	MFR	DESCRIPTION	SYM
1			24K RESISTOR	R12
1		CORNING	680 Pf CAPACITOR	C19
1			5.1K RESISTOR	R13
2	MC603	JFD	1-25 PF CAPACITOR, VARIABLE	C1, C5
19			TERMINAL INSUL	○
6	1280B/ET206A		TERMINAL GND	◐
1	IN964		DIODE	CR1
1	T50-2	MICRO METALS	TRANSFORMER	T1
2	T50-7	MICRO METALS	TRANSFORMER	T3 & T4
1	03	GEN. CERAMICS	TRANSFORMER	T2
3	A-11022	STL	HEAT SINK	
3	2N2219	MOTOROLA	TRANSISTOR	Q1, Q2 & Q3
1	150D104X5035A2	SPRAGUE	.1uf CAPACITOR	C12
~~1~~	~~43 F2~~	~~MILLER~~	~~25-60 μh SHORE VARIABLE~~	~~L2~~
1	WEE 22	ESSEX	22 μh	L1
1	~~HRDM-15-[illegible]~~	EL MENCO	~~[illegible]~~ 240 Pf CAPACITOR	C1 ~~C4~~
* 1	HRDM-15-271J	EL MENCO	270 Pf "	C10 & C5
2	VK30CW103J	VITROMON	.01uf "	C8 & C14
1	HRDM-15-152J	EL MENCO	1500 Pf "	C7
4	CYFM10C250J	CORNING	25 Pf "	C4
* 2	CYFM10C181J	CORNING	180 Pf "	C2 & C6
3	2950	JOHANSON	0-10 " VARIABLE	C3, C9 & C13
3	FA5C-102W	ALLEN BRADLEY	.001 " FEED THRU	C16, C17 & C18
1			3K RESISTOR 1/4 W 5%	R9
1			680Ω " "	R7
2			100Ω " "	R6, R8 & R10
2			470Ω " "	R4 & R5
1			51Ω " "	R2
3			1K " "	R1, R3 & R11

ORIGINATOR	DATE	TITLE	
I. HARRIS	10-23-63	2.414008 MC MIXER	ENGINEERING SKETCH SPACE TECHNOLOGY LABORATORIES, INC. LOS ANGELES, CALIFORNIA
HL			SK A-11303-3
MJO 4126-01-01			SHEET OF

2 NS

STL Form 5218 (Rev. 7-59)

SK

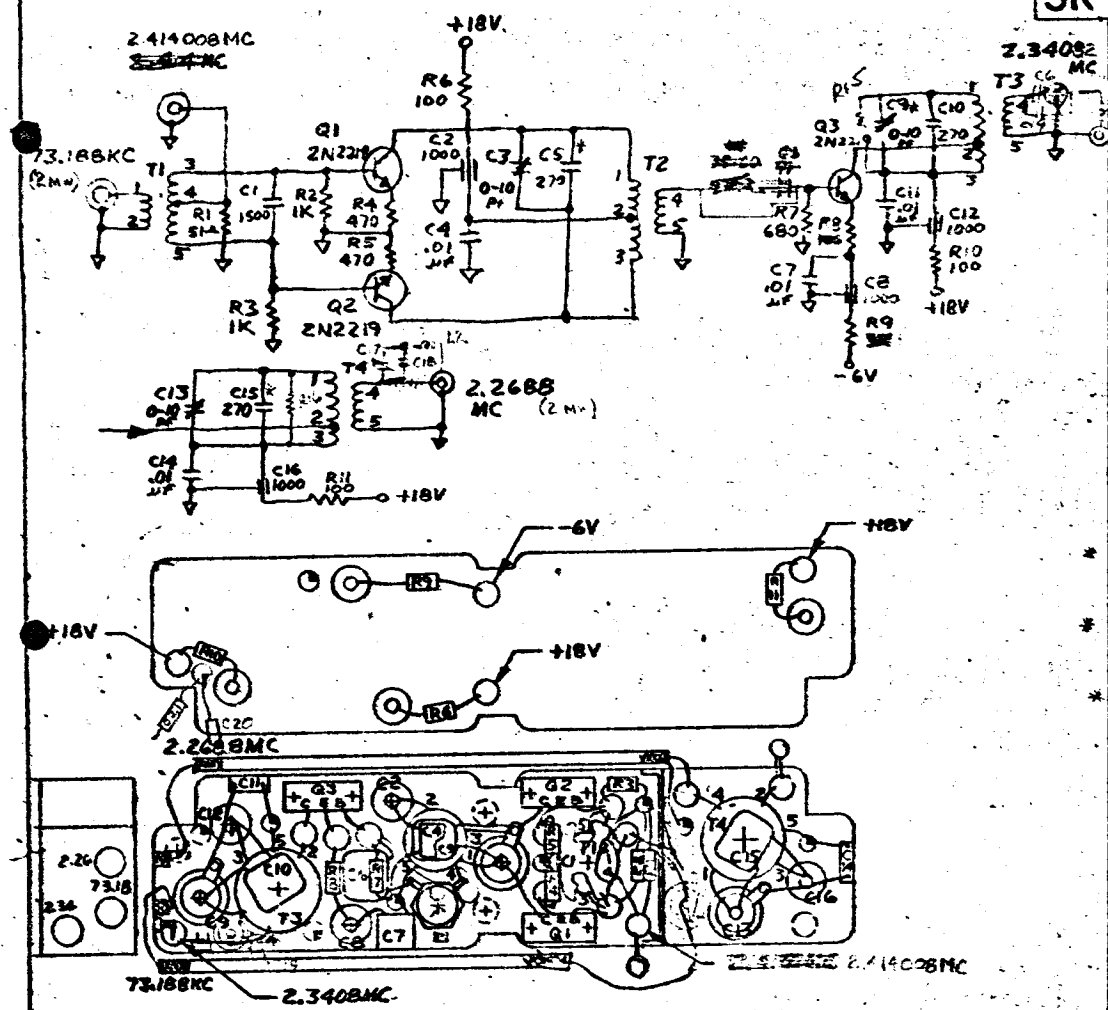

16 17	4073-062	LERCO	TERMINAL, INSUL.	○
8 6	ET2064	STL	TERMINAL, GRD	◐
3	TO-5		HEAT SINK, BORON NITRATE	
3	T50-7	MICRO METALS	TRANSFORMER	T2,3,4
1	03	GENERAL CERAMICS	TRANSFORMER	T1
2			33 K RESISTOR 1/4W	R15, R16
3	2N2219	MOTOROLA	TRANSISTOR	Q1,2,3
2	[illegible]	ACDC [illegible]	[illegible] INDUCTOR, [illegible]	L1, L2
* 2		CORNING	15 PF CAPACITOR	C19, C18
1	HRDM-15-910J	ELMENCO	91 PF CAPACITOR	C6
* 2	HRDM-15-271J	ELMENCO	270 PF	C5, 15
4	WK30CW103J	VITRAMON	.01 µF CAPACITOR	C4, 7, C11, 14
* 3 5	2950	JOHANSON	0-10 PF CAPACITOR, VARIABLE C6 C17	C3, 9, 13
4	SS5A-102W	ALLEN-BRADLEY	1000 PF , STANDOFF	C2, 8, C12, 16
1	HRDM-19-152J	ELMENCO	1500 PF CAPACITOR	C1
2		SPRAGUE	74 µF	C21, C20
1			150 Ω -① RESISTOR	R8
1			1.5K-① 1.6K RESISTOR	R9
1			680 Ω	R7
5			100 Ω	R6, 8, R10, 11
2			470 Ω	R4, 5
2			1K	R2, 3
1			51 Ω RESISTOR	R1

T1
48T CT #30 270°
8T [illegible] #30 30°

T2
60T CT #30 200°
6T [illegible] #30 30°

T3, T4 #30
60T TAPPED AT 16T 200°
5T [illegible] #30 30°

ORIGINATOR	DATE	TITLE	ENGINEERING SKETCH
L.L. FREED	10-24-3	234052MC MIXER	SPACE TECHNOLOGY LABORATORIES, INC. LOS ANGELES, CALIFORNIA
			SK A-11303-4
MJO 4126-01-01			SHEET OF

STL Form 5030 (Rev. 2-59)

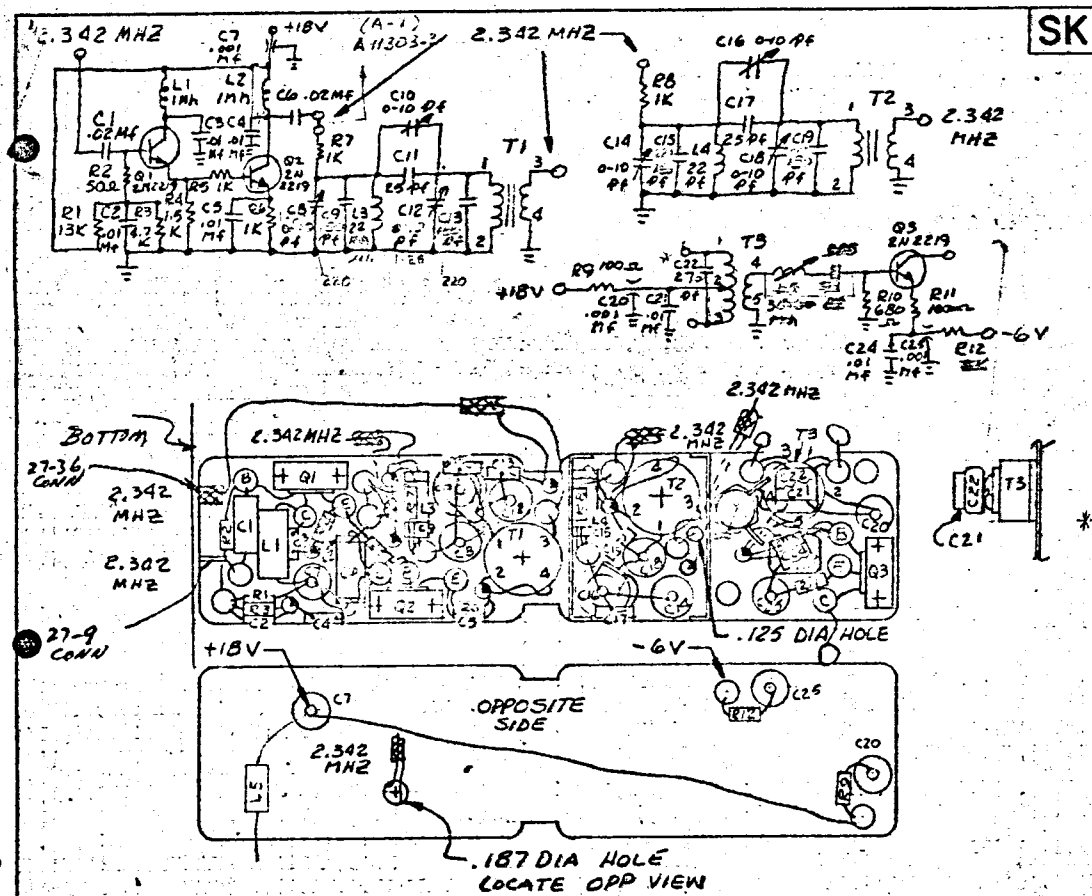

T1 & T2

PRIM 60T #30 360°

SEC 9T #26 360°

T3

PRIM 60T C.T. #30 200°

SEC 6T LINK 30°

SK A-11303-5

CHG LTR

NO REQ	MFR OR STL PART NO	MFR	DESCRIPTION	SYM
2	A-11023	STL	BUSHING INSUL	
22	4073-062	LERCO	TERMINAL INSUL	
9	1280B/ET2064	USECO/STL	TERMINAL GRD	
1	T50-7	MICRO METALS	COIL FORM	T3
2	T50-2	MICRO METALS	COIL FORM	T1, T2
~~1~~	~~4312~~	~~MILLER~~	~~35-60 MH INDUCTOR, VARIABLE~~	~~L5~~
2		ACDC	22 μh CHOKE	L3, L4
2		AC DC	1 MH CHOKE	L1, L2
3	A-11022	STL	HEAT SINK (TO-5)	
3	2N2219	MOTOROLA	TRANSISTOR	Q1, Q2, Q3
1		VANGUARD	220 μh INDUCTANCE	L5
~~1~~	~~HRDM-15-910J~~	~~ELMENCO~~	~~91 Pf CAPACITOR~~	~~C23~~
1	HRDM-15-271J	ELMENCO	270 Pf CAPACITOR	C22
2	CYFM10C250J	CORNING	25 Pf	C11, C17
4	CYFM10C181J	CORNING	220 Pf	C9, C13, C15, C19
2	2950	JOHANSON	0-10 Pf	C2, C4, C6, C8
3	SS5A-102W	ALLEN BRADLEY	.001 μf	C7, C20, C25
6	VK30CW103K	VITRAMON	.01 μf	C2, C3, C4, C5, C21, C24
2	MC80V203K	AEROVOX	.02 μf CAPACITOR	C1 & C6
4	MC603	JFD	1-28 Pf VARIABLE	C8, C12, C16, C19
1			3K-Ω RESISTOR 1/4 W	R12
1			680 Ω	R10
2			100 Ω	R9,
4			1K	R5, R6, R7 & R8
1			1.5K	R4
1			4.7K	R3
1			50 Ω	R2
1			13K RESISTOR 1/4 W	R1
1			100Ω-Ω RESISTOR	R11

ORIGINATOR Hansen

DATE 10-23-63

TITLE 2.342 MC PWR DIV

MJO 4126-01-01

ENGINEERING SKETCH
SPACE TECHNOLOGY LABORATORIES, INC.
LOS ANGELES, CALIFORNIA

SK A-11303-5

SHEET 1 OF 1

STL Form 5238 (Rev. 2 59)

SK | CHG LTR

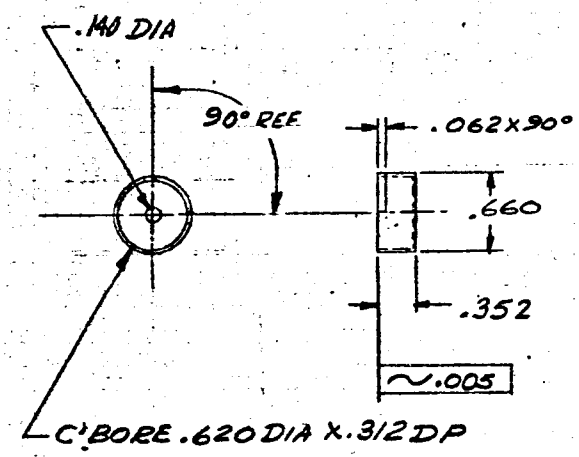

ORIGINATOR	DATE	TITLE	ENGINEERING SKETCH SPACE TECHNOLOGY LABORATORIES, INC. LOS ANGELES, CALIFORNIA
		SHIELD, TRANSFORMER (T50-2)	SK A11304-100
MJO 4126-01-02			SHEET OF

STL Form 5238 (Rev. 2-59)

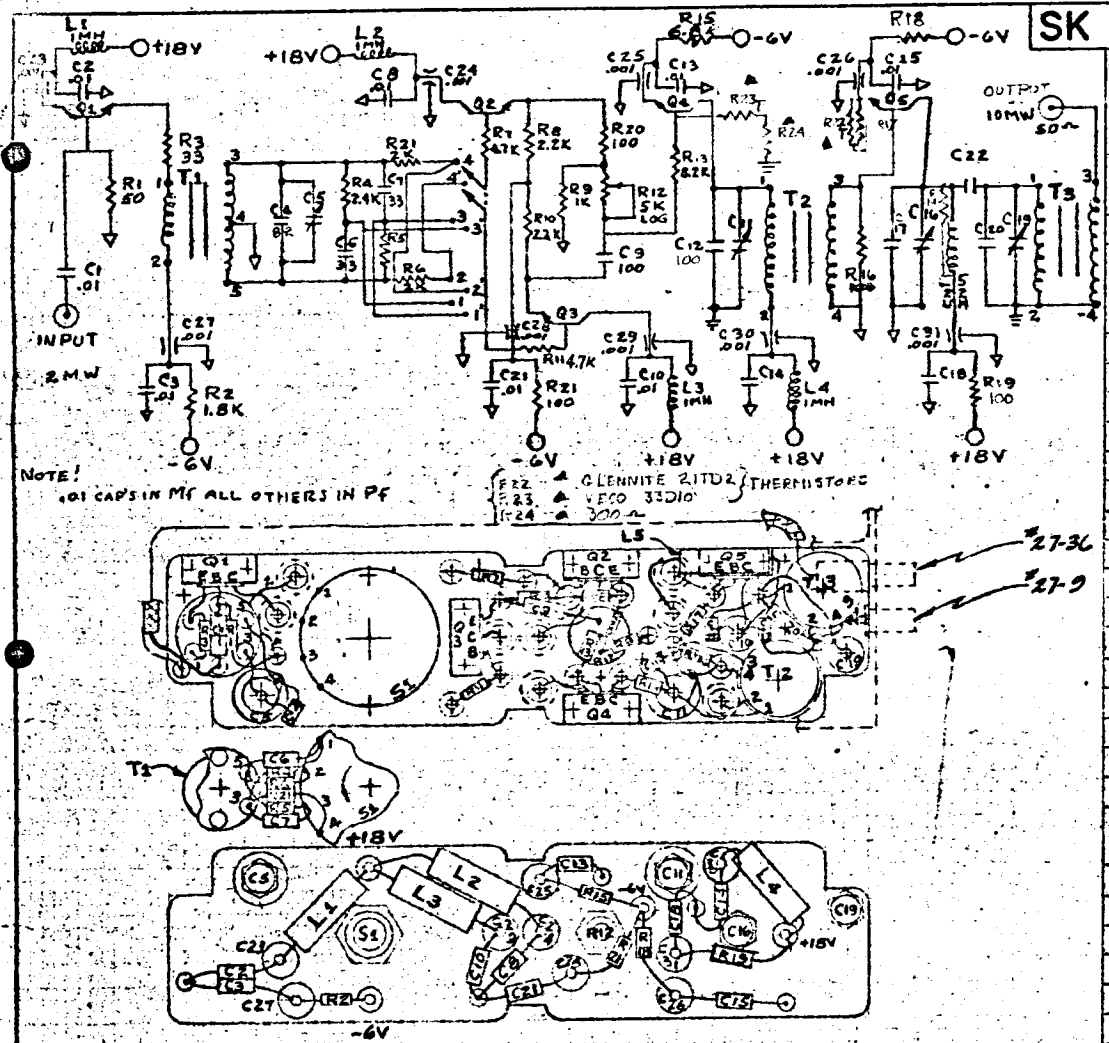

1			RESISTOR 6.8K ¼W ±5%	R15
15	4073-062	LERCO	TERMINAL, INSULATED	⊚
15	ET 2064	STL	TERMINAL, GROUND	⊙
4	A-11023-2	STL	INSULATOR (CAPACITOR)	C5, 11
1		POBOG	SWITCH, ROTARY	S1
5	2N2219	MOTOROLA	TRANSISTOR	Q1,2,3,4,5
5	A11021	STL	HEAT SINK (TO-5 CASE ZnZ.OxNITRATE)	
3	50-2	MICRO METALS	CORE, TRANSFORMER	T1, 2, 3
1		ACDC	CHOKE 22 Uh	L5
4		ACDC	CHOKE 1Mh	L1, 2, 3, 4
9	FA5C-102W	ALLEN BRADLEY	CAPACITOR FEEDTHRU .001	C23 THRU 31
4	MC 603	JFD	ADJ. 1-23	C6, 8, 14, 19
1		CORNING	22pf	C22
1			130 pf	C20
1			150 pf	C17
1			100 pf	C12, C9
2			33 pf	C6, 7
2		CORNING	82 pf	C4.
10	VK30CW103J	VITRAMON	CAPACITOR .01μf (C.W. -- C31 2M 18 21)	
			RESISTOR 7.5Ω -12 9.1Ω -13	P17
1		ALLEN BRADLEY	RESISTOR 5K LOG ADJ.	R12
1			620 -11 820 -13	R18
3			100Ω (R16 - 50Ω)	R16, 20, 21
1			100Ω	R19
1			3.3K	R14
1			8.2K	R13
1			1K	R9
2			2.2K	R8, 10
2			4.7K	R7, 11
1			2K	R6
2			2.4K	R4, 5
2			33Ω	R3,
1			1.8K	R2
1			RESISTOR 50Ω ¼W ±5%	R1
NO REQD	MFR OR STL PART NO	MFR	DESCRIPTION	SYM

	T1	T2	T3
PRIM.	7 T - 30 GA.	68 T. - 30 GA.	68 T - 30 GA.
SEC.	42 T. - 26 GA.	10 T. - 26 GA.	10 T - 26 GA.

ORIGINATOR S. BASHIN

DATE

TITLE PHASE SHIFTER (1 - 2.2688MC) (3 - 2.34089MC)

MJO

ENGINEERING SKETCH
SPACE TECHNOLOGY LABORATORIES, INC.
LOS ANGELES, CALIFORNIA

SK A11304-1 F-3

SHEET 1 OF 1

STL Form 523B (Rev. 2-59)

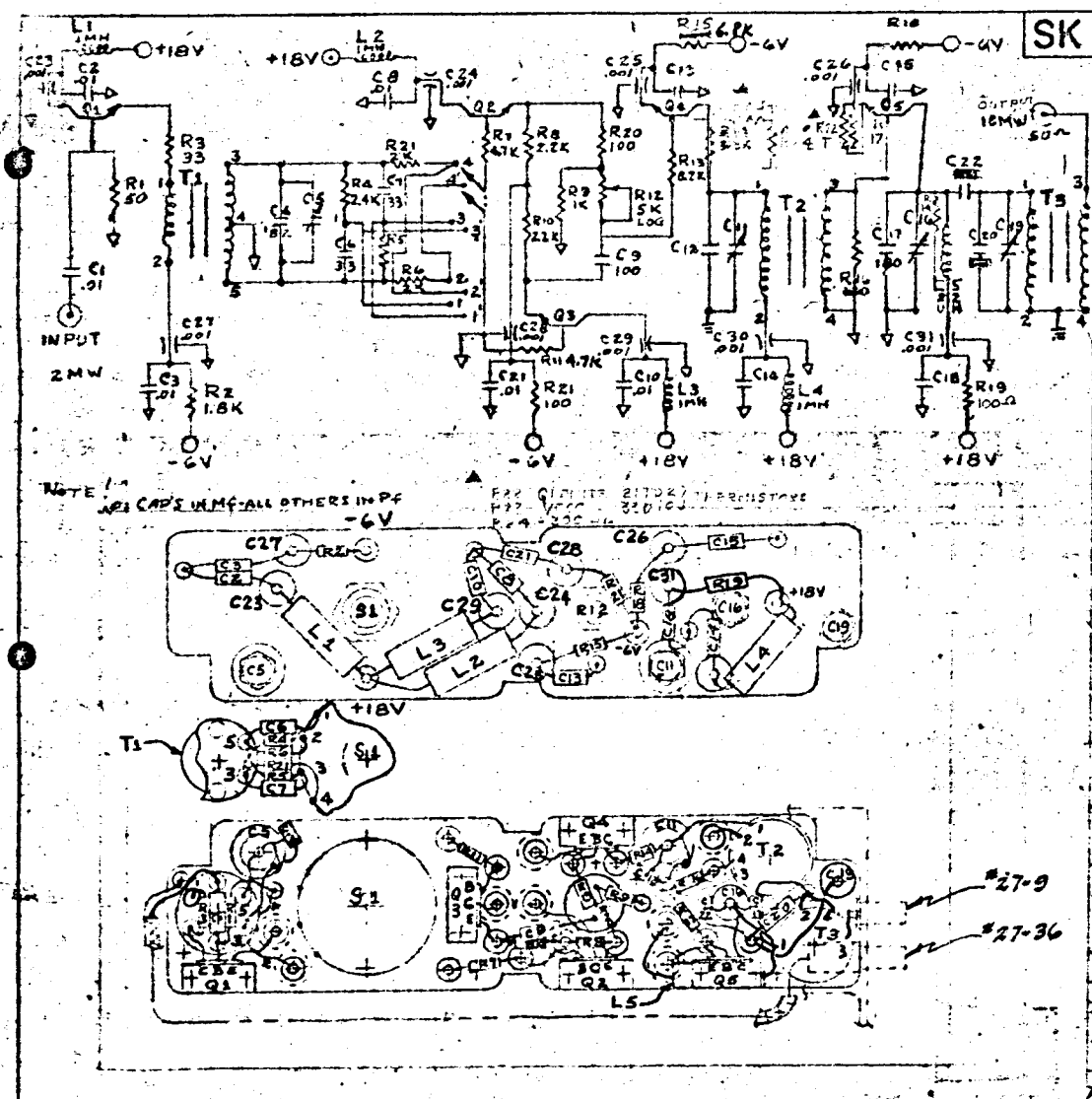

	T1 26	T2	T3
PRIM.	7/T - 30 GA.	68T. - 30GA.	68T - 30GA.
SEC.	7/T. - 30 GA.	10 T. - 26 GA.	10T - 26GA.

SK

CHG LTR

No REQD	MFR OR STL PART No	MFR	DESCRIPTION	SYM
1			RESISTOR 6.8K	R15
15	4073-062	LERCO	TERMINAL, INSULATED	◎
15	ET 2064	STL	TERMINAL, GROUND	⊙
4	A-11023-2	STL	INSULATOR (CAPACITOR)	C5, 11
1		POBOG	SWITCH, ROTARY	S1
6	2N2219	MOTOROLA	TRANSISTOR	Q1,2,3,4,5
5	A11021	STL	HEAT SINK (TO-5 CASE ZERO NITRATE)	
3	50-2	MICRO METALS	CORE, TRANSFORMER	T1,2,3
1		ACDC	CHOKE 22 UH	L5
4		ACDC	CHOKE 1MH	L1,2,3,4
9	FA5C-102W	ALLEN BRADLEY	CAPACITOR FEEDTHRU .001	C23 THRU 31
4	MC 603	JFD	ADJ. 1-28 pf	C6,8,16,19
1		CORNING	22 pf	C22
1			130 pf	C20
1			150 pf	C17
12			100 pf	C12, C9
2			33 pf	C6,7
21		CORNING	CAPACITOR 82 pf	C4
10	VK30CW103J	VITRAMON	CAPACITOR .01 μf (C3,13,14,15,31) 0.1 μf	[illegible]
		ALLEN BRADLEY	9.1 Ω	[illegible]
1		ALLEN BRADLEY	RESISTOR 5K LOG ADJ.	R12
1			820 Ω	R18
3			100 Ω R19	R20,21
1			50	R16
1			3.3K	R14
1			8.2K	R13
1			1K	R9
2			2.2K	R8,10
2			4.7K	R7,11
1			2K	R6
2			2.4K	R4,5
2			38 Ω	R3,[illegible]
1			1.8K	R2
1			RESISTOR 50 Ω	R1

ORIGINATOR S. BASHIN

DATE

TITLE PHASE SHIFTER (-2 = 2.34082 MC) (-4 = 2.34200 MC)

MJO

ENGINEERING SKETCH
SPACE TECHNOLOGY LABORATORIES, INC.
LOS ANGELES, CALIFORNIA

SK A11304-2 & -4

SHEET 1 OF 1

STL Form 523B (Rev. 2)

SK | CHG LTR

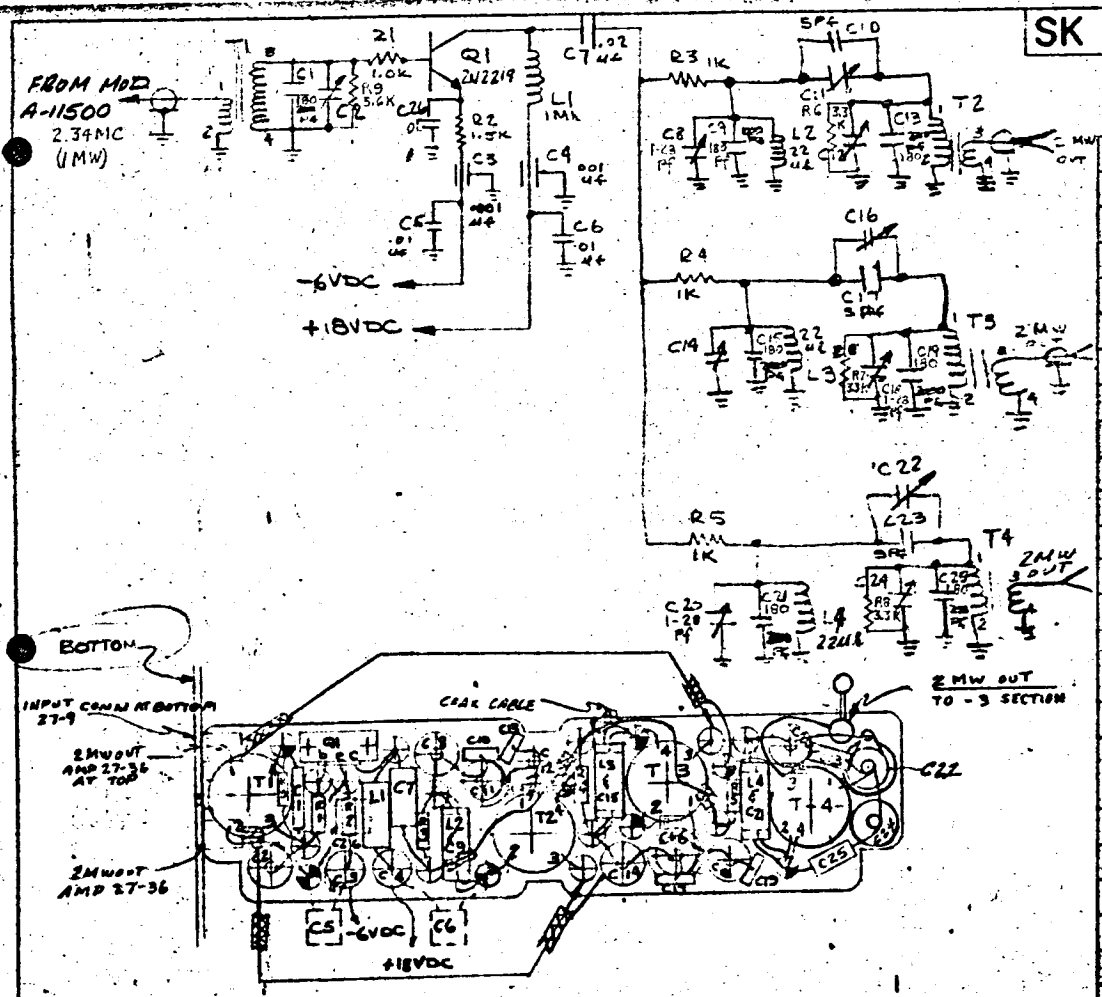

T1 PRIM = 12T NO.30 SEC = 60T NO.30

T2 PRIM 60T NO.30 SEC 9T NO.26

T3 PRIM 60T NO.30 SEC 9T NO.26

T4 PRIM 60T NO.30 SEC 9T NO.26

NO. REQD	MFG OR STL PART NO.	MFG	DISCRIPTION	REF DESIG
13	4073-062	LERCO	TERMINAL INSULATED	
2	ET2066	STL	TERMINAS GRD FEED/THRU	
6	2208/2064	USECO/STL	TERMINAS GRD STD/OFF	
1	A-11022	STL	HEATSINK TRANSISTOR	
3	JMC2950	JOHANSON	.2-10 PF CAPACITOR	C11, C16 & C22
7	MC603	JFD	1-28 PF	C2, C8, C12, C14, C18, C20 & C24
1	MC80V203K	AEROVOX	.02 uf	C7
2	FA5C-102W	ALLEN BRADLEY	CAPACITOR FEED THRU	C3 & C4
3	VK906 [illegible] .03K	VITRAMON	.01 uf	C5, C6 & C26
3	CYFM10C050J	CORNING	5 PF	C10, C17, C23
7	CYFM10C[illegible]J	CORNING	180 PF, CAPACITOR	C1, C9, C13, C15, C19, C21 & C25
	T50-2	MICROMETALS	COIL FORM	T1-T4
1	2N2219	[illegible]	TRANSISTOR	Q1
1			RESISTOR 5.6K 1/4W ±5%	[illegible]
3		ACDC	CHOKE RF 22 uh	L2, L3 & L4
1		ACDC	CHOKE RF 1 Mh	L1
3			RESISTOR 3.3K 1/4W ±5%	[illegible]
1			RESISTOR 1.5K 1/4W ± 5%	R2
4			RESISTOR 1K 1/4W ± 5%	R1, R3, R4 & R5

ORIGINATOR [illegible] | DATE 10/21/63 | TITLE AMP & PWR DIVIDER 2.34 MC

ENGINEERING SKETCH
SPACE TECHNOLOGY LABORATORIES, INC.
LOS ANGELES, CALIFORNIA

SK A-11305-1

SHEET OF

MJO

24 hrs

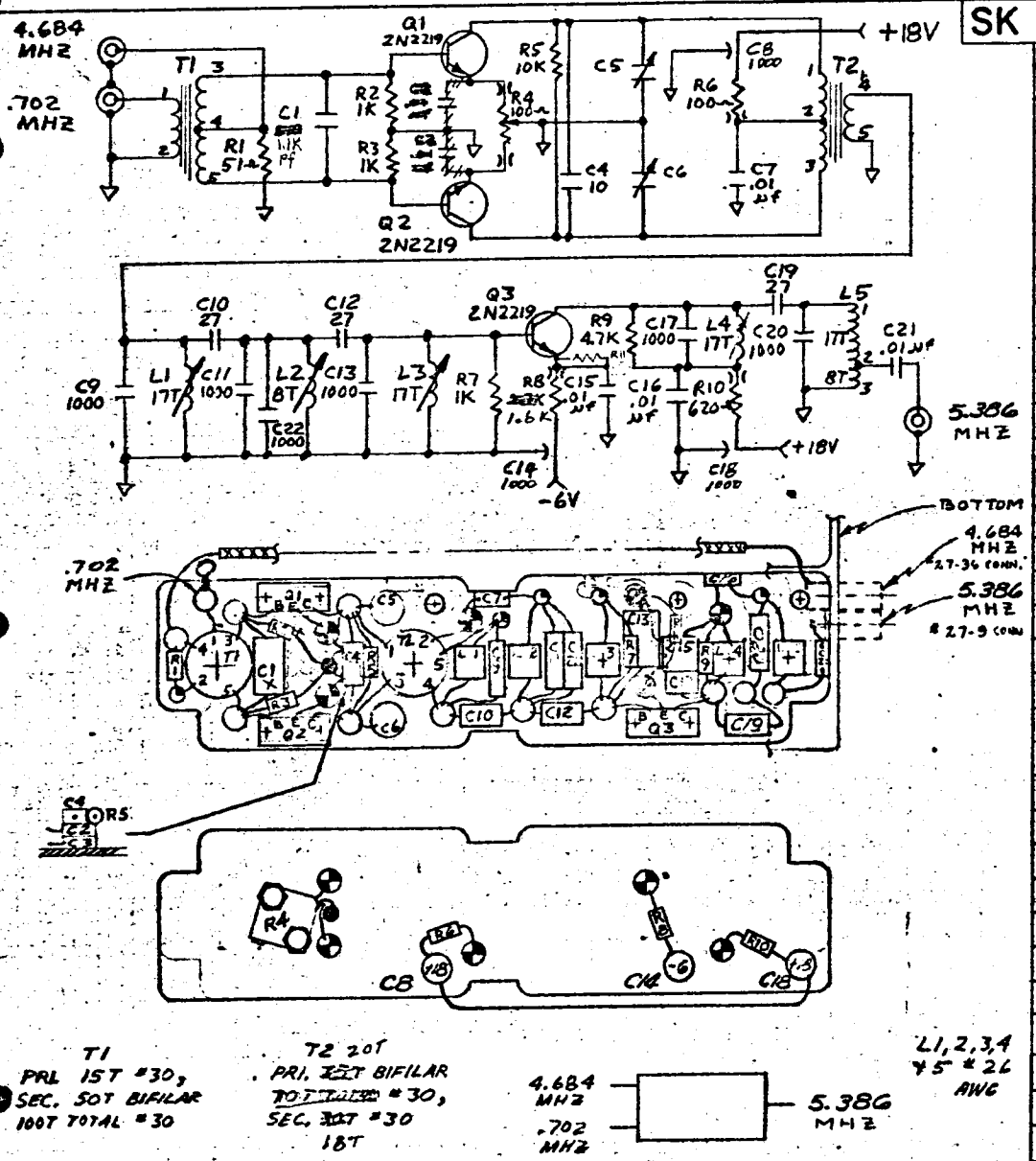

SK

NO. REQD	MFR OR STL PART NO.	MFR	DESCRIPTION	SYM
5	4442-B-9	USECO	TERMINAL, INSUL F/T	
11	4073-062	LERCO	TERMINAL, INSUL ST/OFF	
1	ET2066	STL	TERMINAL, GRD F/T	
5	ET2064	STL	TERMINAL, GRD ST/OFF	
3	TO-5		HEATSINK BORON NITRATE	
3	2N2219	MOTOROLA	TRANSISTOR	Q1,Q2,Q3
1	T50-2	MICRO-METALS	TRANSFORMER CORE	T2
1	T50-7	MICRO-METALS	TRANSFORMER CORE	T1
4	23-003	MICRO-METALS	INDUCTOR CORE	L2,3,4,5
1	23-003	MICRO-METALS	INDUCTOR CORE	L1
3	FASC-102W	ALLEN-BRADLEY	1000 PF CAPACITOR	C8,C14,C18
2	JMC 2950	JOHANSON		C5,C6
4	VK30CW103K	VITRAMON	.01 µF	C7, C15,C16,C21
3	CYFM10CZ70J	CORNING	27 PF	C10,C12,C19
6	CYFM15C102J	CORNING	1000 PF	C9,C11,C22 C13,C17,C20
1	CYFM10C100J	CORNING	10 PF	C4
1	CYFM15C[illegible]J	CORNING	1.1K PF CAPACITOR	C1
1			56Ω-① 51Ω-② RESISTOR ¼W ±5%	R11
1	300-66H-100	DAYSTROM PACIFIC	100Ω RESISTOR, VARIABLE	R4
1			620Ω RESISTOR	R10
1			4.7K	R9
1			1.6K	R8
1			100Ω	R6
1			10K	R5
3			1K	R2,3,7
1			51Ω RESISTOR	R1

ORIGINATOR L.L. FREED — DATE 10-18-63 — TITLE MIXER 4.684 MC .702 MC 5.386 MC

ENGINEERING SKETCH
SPACE TECHNOLOGY LABORATORIES, INC.
LOS ANGELES, CALIFORNIA

SK A-11305-2

SHEET OF

MJO

STL Form 5238 (Rev. 2-59)

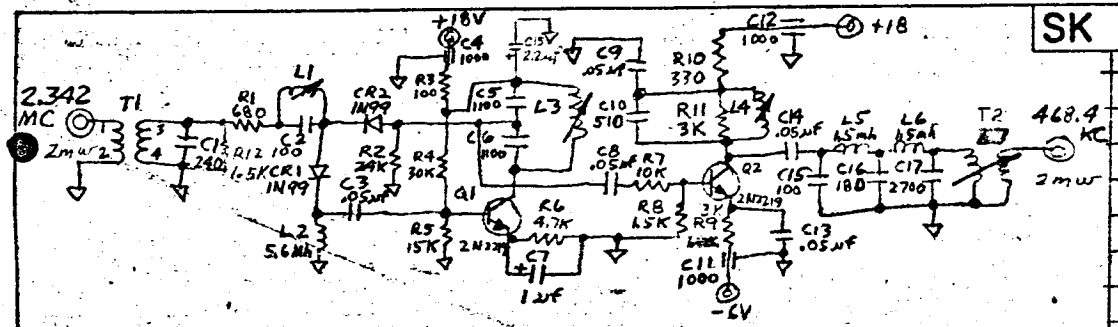

2.342 MC → ÷ 5 → 468.4 KC

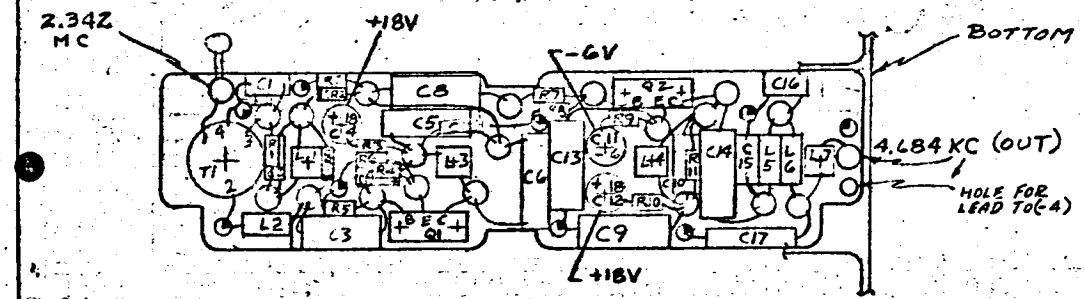

T1
PRI. 10T #28
SEC. 50T #28

L1
70 µh NOMINAL
#32
150T

L3, L4
220 µh NOMINAL
~~#32~~ #34
250 T

T2
PRI 120T
SEC 22T
#32

NO REQD	MFR OR STL PART NO	MFR	DESCRIPTION	SYM
18	4073-062	LERCO	TERMINAL, INSUL	
8	ET 2064	STL	TERMINAL, GND	

NO REQD	MFR OR STL PART NO	MFR	DESCRIPTION	SYM
	SK	CHG LTR		
2	TO-5		HEAT SINK, BORON NITRATE	
2	1N99	PSI	DIODES	CR1, CR2
2	2N2219	MOTOROLA	TRANSISTORS	Q1, Q2
2	WEE-1500	ESSEX	1.5 mh INDUCTOR	L5, L6
1	WEE-5600	ESSEX	5.6 mh INDUCTOR	L2
4	23-007	MICRO-METALS	INDUCTOR CORE	L1, 3, 4, E
1	T50-2	MICRO-METALS	TRANSFORMER	T1, T2
1	150D225X9035BZ	SPRAGUE	2.2 µf CAPACITOR 35V DC	C15
5	CB0V503AM	AEROVOX	.05 µF	C3, 8, 9, C13, 14
1	CYFM20C272J	CORNING	2700 PF	C17
1	CY12C181J	VITRAMON	180 PF	C16
1	CY16C511J	VITRAMON	510 PF	C10
1	105X9020	SPRAGUE	1 µf	C7
2	CY21C112J	VITRAMON	1100 PF	C5, C6
3	FA5C-102W	ALLEN/BRADLEY	1000 PF	C4, C11, C12
2	CY12C101J	VITRAMON	100 PF	C2, C15
1	CY12C241J	VITRAMON	240 PF CAPACITOR	C1
1			3K RESISTOR	R11
1			330 Ω	R10
1			~~1.5K~~ 3 K	R9
1			1.5K	R8, R12
1			10K	R7
1			4.7K	R6
1			15K	R5
1			30K	R4
1			100 Ω	R3
1			24K	R2
1			680 Ω RESISTOR	R1

ORIGINATOR	DATE	TITLE	
L.L. FREED	10-22-63	FREQ. DIVIDER 2.342 MC 468.4 KC	ENGINEERING SKETCH SPACE TECHNOLOGY LABORATORIES, INC. LOS ANGELES, CALIFORNIA
L.B.	10-23-63		SK A-11305-3
MJO			SHEET OF

STL Form 523B (Rev. 2 59)

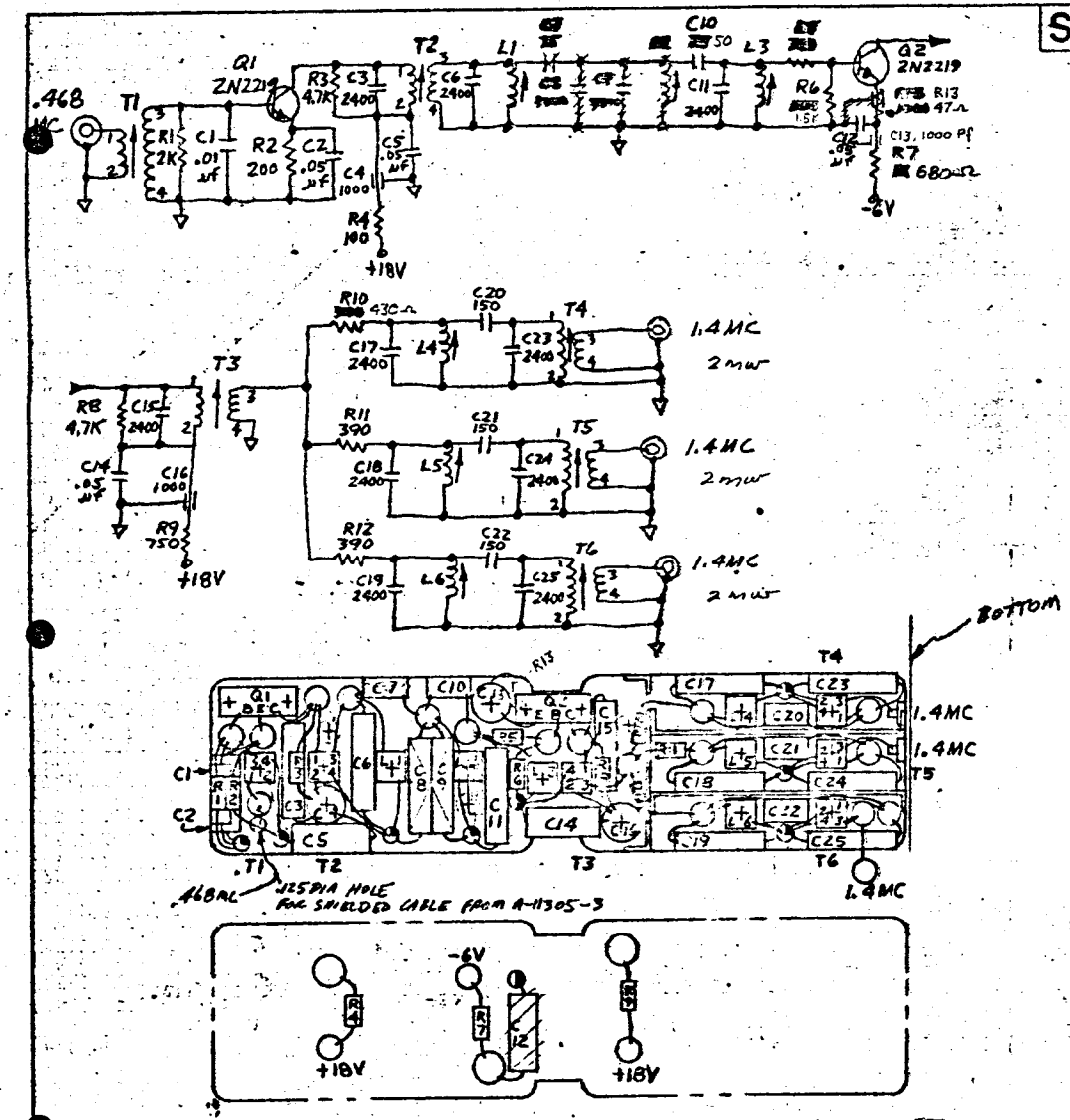

T1	T2	T3	T4,5,6	L1,3,4,5,6	~~T7~~
PRI. 55T #34	43T #32	43T #32	43T #32	43T #32	~~20T #28~~
SEC. 15T #34	27T #32	18T #32	14T #32		
23-002 CORE	23-003	23-003	23-003	23-003	~~23-003~~

MICROMETAL CORES

SK

CHG LTR

LEN 9 HRS

NO. REQD	MFR OR STL PART NO.	MFR	DESCRIPTION	SYM
19	4073-062	LERCO	TERMINAL, INSUL. S/O	
2	ET2066	STL	TERMINAL, GRD F/T	
6	ET2064	STL	TERMINAL, GRD S/O	
2	A-11022	STL	HEATSINK, BORON NITRATE	
5	A-11021	STL	INDUCTOR	L1,2,3,4,5,6
6	A-11021	STL	TRANSFORMER	T1,2,3,4,5,6
1			47Ω RESISTOR 5% 1/4W	R13
2	2N2219	MOTOROLA	TRANSISTOR	Q1,2
1			430Ω RESISTOR 5% 1/4W	R10
4	YY12C151J	VITRAMON	150 Pf CAPACITOR C/O	C20,21,22
~~2~~	~~CYFM20E302~~	~~CORNING~~	~~3000 Pf~~	~~C8,9~~
~~2~~	~~YY12C75OJ~~	~~VITRAMON~~	~~75 Pf~~	~~C7,10~~
3	FA5C-102W	ALLEN/BRADLEY	1000 Pf, F/T	C4,13,16
10	CYFM20C242J	CORNING	2400 Pf C25	C3,6,11,15,17,18,19,23,24
4	MC80V503AK	AEROVOX	.05 µf CAPACITOR	C2,5,12,14
~~1~~	~~MC80V103AK~~	~~AEROVOX~~	~~.01 µf~~	~~C1~~
1	CYFM30C103J	CORNING	10,000 Pf	C1
1			750 RESISTOR	R9
1			680	R7
1			1.5K	R6
2			390	11,12
1			100	R4
2			4.7K	R3,8
1			200Ω	R2
1			2K RESISTOR	R1

ORIGINATOR	DATE	TITLE	ENGINEERING SKETCH
L. L. FREED	11-1-63	x3 MULTIPLIER 1.4 MC OUT	SPACE TECHNOLOGY LABORATORIES, INC. LOS ANGELES, CALIFORNIA
MJO			SK A-11305-4
			SHEET OF

STL Form 523B (Rev. 2-59)

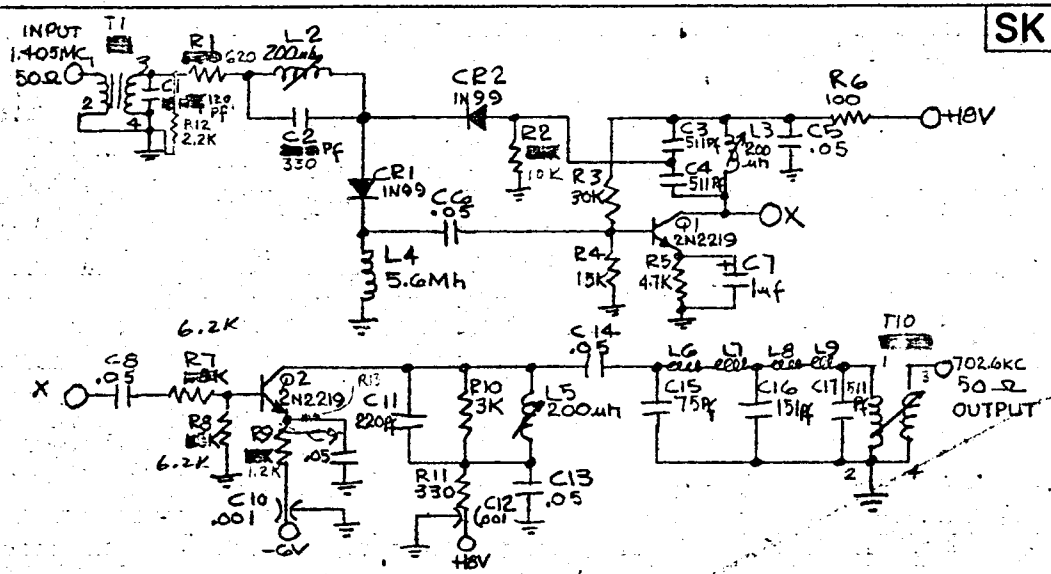

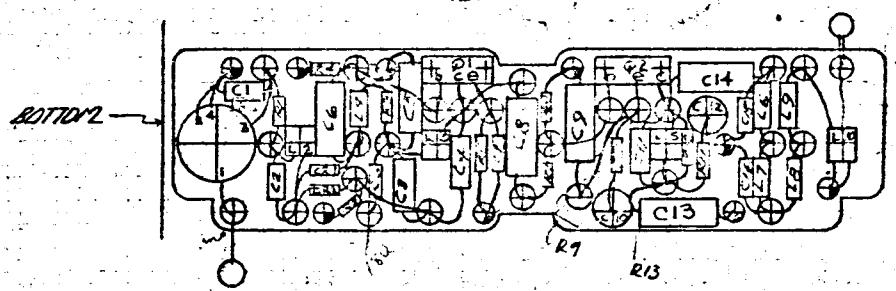

T1
PRI 20T #28 GA
SEC 100T #28 GA

L2, L3, L5
215T
#32

T10
PRIM 196T #32
SEC 14T #32

NO REQD	MFR OR STL PART NO	MFR	DESCRIPTION	SYM
1	SWD-5600	NYTRONICS	5.6 Mh CHOKE	L4
26	4073-062	LERCO	TERMINAL INSUL	
9	1280B ET2064	USECO STL	TERMINAL GRD	
3	A11022	STL	HEAT SINK	
1	T50-2	MICRO METALS	TRANSFORMER	
4	A11021	STL	COIL FORM	
2	1N99	HUGES	DIODE	CR1, CR2
2	2N2219	MOTOROLA	TRANSISTOR	Q1, Q2
4	SWD-680	NYTRONICS	680 uh CHOKE	L6 L7 L8, L9
1	CYFM10C151J	CORNING	151 pf CAPACITOR	C16
1	CYFM10C750J	CORNING	75 pf	C15
1	CYFM10C221J	CORNING	220 pf	C11
2	FA5C-102W	ALLEN BRADLEY	.001 uf FEED THRU	C12, C10
1	150D	SPRAGUE	10 uf	C7
6	MCB0V503AK	AEROVOX	.05 uf	C5, C6, C8 C9, C13, C14
3	CYFM10C511J	CORNING	511 pf	C3, C4, C17
1	CYFM10C331J	CORNING	330 pf	C2
1	CYFM10C121J	CORNING	120 pf CAPACITOR	C1
3	23-007	MICRO METAL	CORE	
1			3K RESISTOR 1/4W, 5%	R10
1			12.0 Ω	R13
2			6.2K RB	R7, R8
1			100 Ω	R6
1			4.7K	R5
1			15K	R4
1			30K	R3
1			10K	R2
2			330 Ω RESISTOR 1/4W, 5%	R9, R11

NO REQD	MFR OR STL PART NO	MFG	DESCRIPTION	SYM
2	27-002	MICRO METALS	INDUCTOR CORE	L3, L5 T10
1	23-003	MICRO METALS	INDUCTOR CORE	L2
1			RESISTOR ±5% 1/4W 1.2K	R9
1			↓ ↓ ↓ 620 Ω	R1
1			RESISTOR ±5% 1/4W 2.2K	R12

ORIGINATOR J. E. Anderson Jr. DATE 11/1/68

MJO 4126-01-01

TITLE FREQ DIVIDER 1.405MC 702.6 KC

ENGINEERING SKETCH
SPACE TECHNOLOGY LABORATORIES, INC.
LOS ANGELES, CALIFORNIA

SK A-113C

SHEET OF

STL Form 5

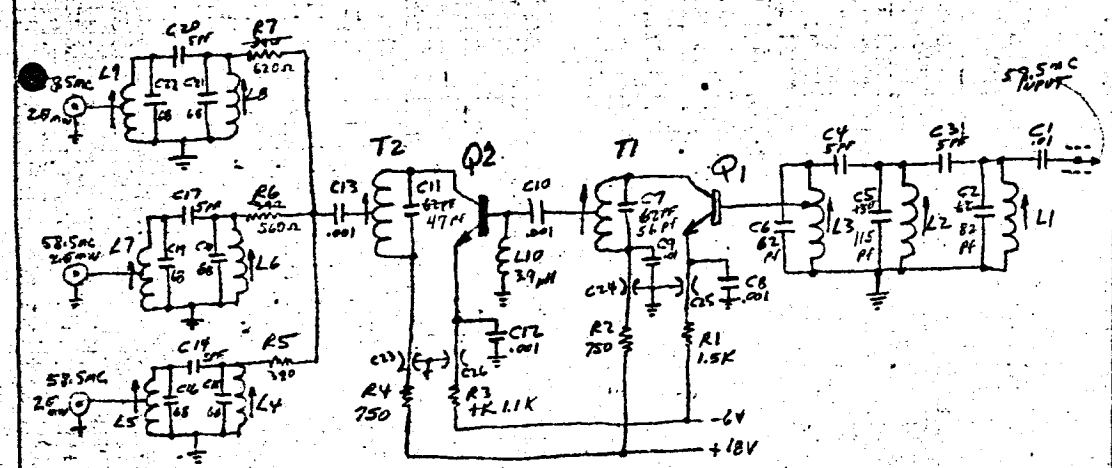

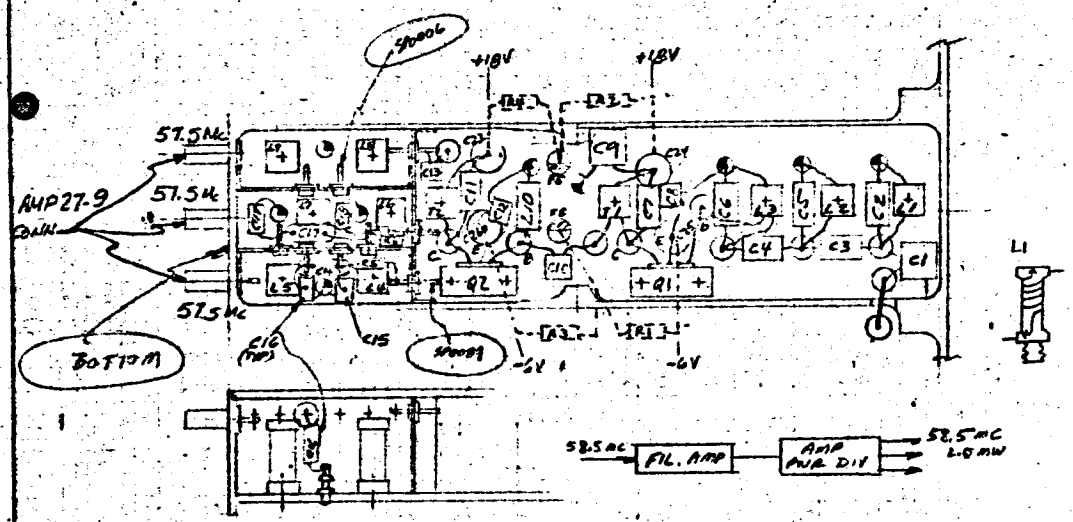

L1 — 5 TURNS #22 BARE TINNED WIRE
L2 — 3 " " " " "
L3 — 6 " " " " " TAP AT 1 TURN FROM BOTTOM.
L4 THRU L9 — 5 TURNS #22 BARE TINNED WIRE
(L5, L7, L9) — TAP 1 TURN FROM BOTTOM
T1 — 5 TURNS #22 BARE TINNED WIRE, TAPPED 1 TURN FROM BOTTOM
T2 — 5 " " " " " 4 " " "

SK

NO. REQD	MFR OR STL PART NO.	MFR	DESCRIPTION	SYM
11			TERMINAL, INSUL	
9	1280B/ET2064	USECO/STL	TERMINAL, GND	
7	/SP0006	/STL	TERMINAL, GLASS TO METAL	
3	/SP0089	/STL	TERMINAL, GLASS TO METAL FEED THRU	
3	27-9	AMPHENOL	CONNECTOR	
1		ACDC	CHOKE 3.9 μH	L10
4	FASC-102W	ALLEN BRADLEY	FEED THRU CAP	C23,24,25,26
2	A11022	STL	HEAT SINK	
2			TRANSISTOR	Q1,Q2
11	A11021	STL	COIL FORMS	L1 THRU 9 T1,2
11	23-002	MICRO METALS	TRANSFORMER CORE	
1			CAPACITOR 47 PF	C11
6	CORNING	CYFM10C680J	68PF	C15,16,18,19 C21,22
4	VITRAMON	VK20CW102K	.001 μF	C8,10,12,13
1	CORNING	CYFM10C135J	115 PF ±30PF	C5
5			5PF	C3,4,14,17 C20
4.1	CORNING	CYFM10C620J	62PF	C2,6,7,16
2	VITRAMON	VK30CW103K	CAPACITOR .01 μF	C1,9
1			82 PF	C2
1			62 PF	C6
3			390	R5,6,7
1			1.0K	R3
2			750	R2,4
1			RESISTOR 1/4 W 5% 1.5K	R1

ORIGINATOR LOWEN
DATE 10-1-63
TITLE 58.5 MC POWER DIVIDER
MJO 4126-01-01

ENGINEERING SKETCH
SPACE TECHNOLOGY LABORATORIES, INC.
LOS ANGELES, CALIFORNIA
SK A-11306-1
SHEET OF

STL Form 523B (Rev. 2-59)

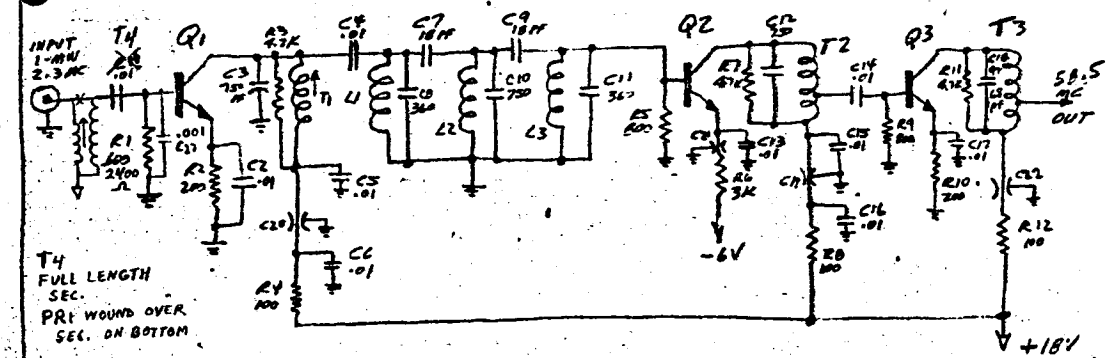

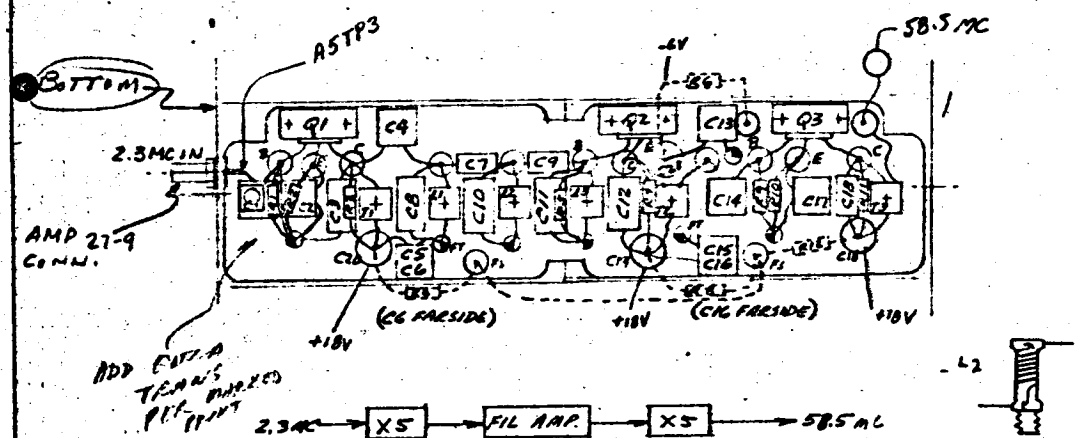

T3 — CORE #23-002 (ONLY)
ALL OTHER CORES — 23-003

ALL WINDINGS ARE WOUND FULL LENGTH OF COIL FORM (EXCEPT L2)

T1 — 9 TURNS #22 FORMVAR — RESONATES AT 11.5 MC WITH 750 PF
T2 — 9 TURNS #22 FORMVAR - TAP 4 TURNS FROM BOTTOM - RES AT 11.5 MC
T3 — 4 TURNS #22 BARE TINNED WIRE - TAP 2 TURNS FROM BOTTOM - RES AT 57.5 MC
T4 — PRI 14T #38 SEC. 38T #38
L1 — 13 TURNS #22 FORMVAR — RESONATES AT 11.5 MC WITH 360 PF
L2 — 7 TURNS #22 FORMVAR — RESONATES AT 11.5 MC WITH 750 PF
L3 — 13 TURNS #22 FORMVAR — RESONATES AT 11.5 MC WITH 360 PF

SK

NO REQD	MFR OR STL PART NO	MFR	DESCRIPTION		SYM
		CHG LTR			
15			TERMINAL, INSUL		
5	USECO/STL	1280B /ET2064	TERMINAL, GND		
2	USECO/STL	/ET2066	TERMINAL, GND F.T.		
4	ALLEN BRADLEY	FASC-10 ½ W	FEEDTHRU CAP.		C22,19,29,31
3	A-11022	STL	HEAT SINK		
3	2N2219	MOTOROLA	TRANSISTOR		
6	A-11021	STL	COIL FORMS		
1	23-002	ARMCO METALS	TRANS. CORE		
5	23-003	" "	" "		
1	↑	CYFM10C910J	↑	68 PF - 91 PF	C16
2		CYFM15C361J		360 PF	C8,11
2		CYFM10C180J		18 PF	C7,9
3	CORNING	CYFM15C751J		750 PF	C3,10,12
10	VITRAMON	VK306CW103K	CAPACITOR	.01 MF	C1,2,4,5,6 C13,14,15,16,17
1	VITRAMON			.001	C22
1				3K	R6
2				800	R5,R9
3				100	R4,R8,12
3				4.7K	R3,R7,11
2				200	R2,R10
1			RESISTOR ¼W 5%	600	R1

ORIGINATOR	DATE	TITLE	ENGINEERING SKETCH
LOVIEN	9-30-63	X 25 MUL. 58.5 MC	SPACE TECHNOLOGY LABORATORIES, INC. LOS ANGELES, CALIFORNIA
MJO 4126-01-01			SK A-11306-2
			SHEET OF

STL Form 523B (Rev. 2-59)

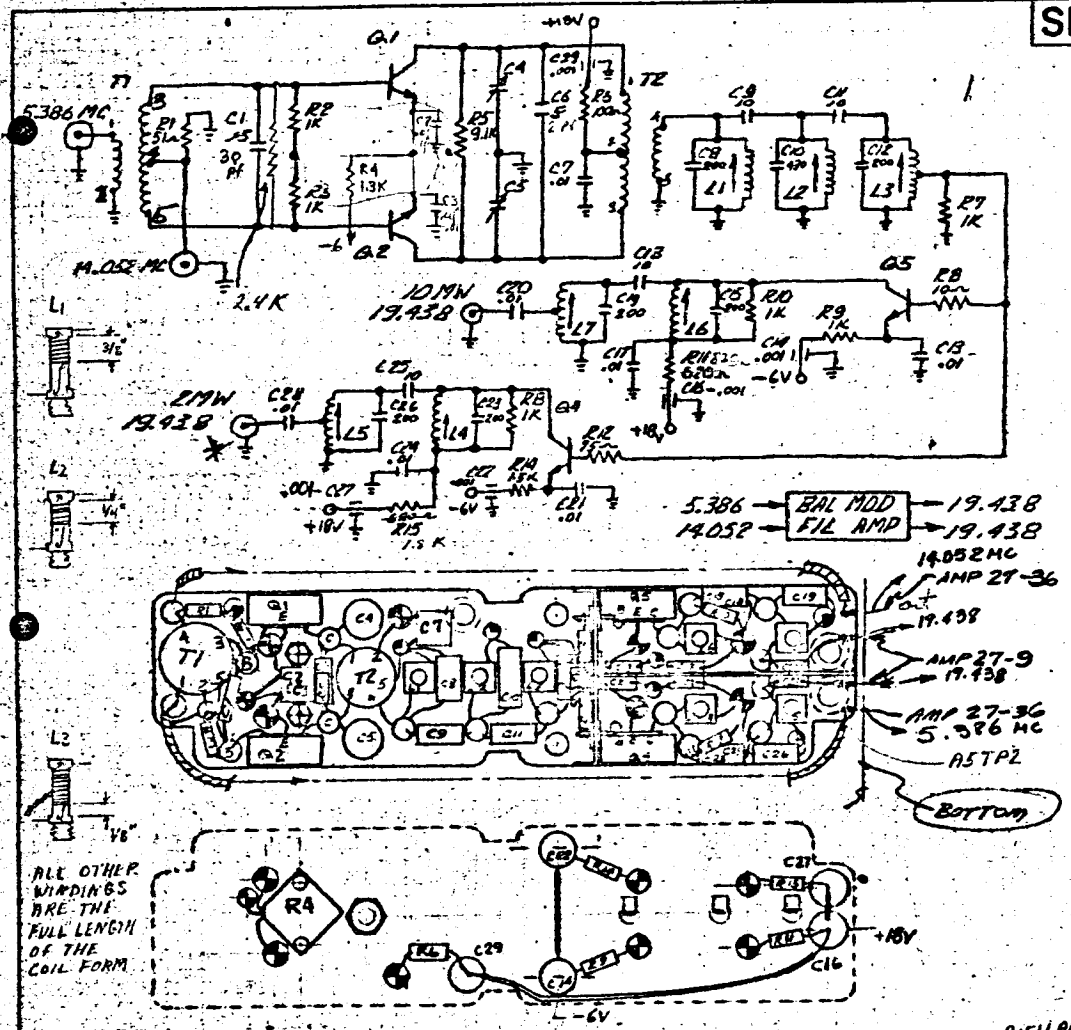

T1 14T PRIM 36T 30 GAGE WIRE 360° SEC 40T BIFILAR 30 GAGE WIRE

T2 28 BIFILAR 360° PRIM 14T 30 GAGE WIRE SEC 15T 30 GAGE WIRE 360°

L1 9 TURNS 22 GAGE WIRE
L2 5 TURNS 22 GAGE WIRE
L3 9 TURNS 22 GAGE WIRE - TAP 3 TURNS FROM BOTTOM
L4 10 TURNS 22 GAGE WIRE
L5 10 TURNS 22 GAGE WIRE - TAP 2 TURNS FROM BOTTOM
L6 10 TURNS 22 GAGE WIRE
L7 10 TURNS 22 GAGE WIRE - TAP 2 TURNS FROM BOTTOM

SK

NO. REQD	MFR OR STL PART NO.	MFR	DISCRIPTION	SYM
7			TERMINAL GND FEED THRU	
17			TERMINAL INSUL	
6			TERMINAL FEED THRU INSUL	
9	1280BET2069	STL	TERMINAL GND	
4	2N2219	MOTOROLA	TRANSISTOR	Q1 thru Q4
4	A-11022	STL	HEAT SINK	
7	84-001	MICRO METALS	CORE	L1 thru L7
7	A-11021	STL	COIL FORM	L1 thru L7
1	T44-6	MICRO METALS	TRANSFORMER	T2
1	T50-2	MICRO METALS	TRANSFORMER	T1
5	SS5A-102W	ALLEN BRADLEY	.001µf CAPACITOR STD OFF	C14, C16, C17, C22 & C29
1			1.8K "	R16
1	VY2C430J	VITRAMON	430 Pf "	C10
4	VY2C100J	VITRAMON	10 Pf "	C9, C11, C18 & C25
6	VY2C200J	VITRAMON	200 Pf "	C8, C12, C15, C19, C23 & C26
1	VY2C500J	VITRAMON	5 Pf 2 Pf "	C6
2	JMC2950	JOHANSON	"	C4 & C5
9	VK30CK103J	VITRAMON	.01µf "	C2, C3, C7, C13, C17, C20, R1, C24 & C28
1	VY2C150J	VITRAMON	15 Pf 30 Pf "	C1
1			1.3K RESISTOR	R4
1			1.5K RESISTOR 1/4W 5%	R14
1			75Ω 620Ω " " "	R12
2			620Ω " " "	R11 & R15
1			10Ω 130Ω " " "	R8
1			9.1K " " "	R5
1			100Ω " " "	R6
6			1K " " "	R2, R3, R7, R9, R10 & R13
1			51Ω " " "	R1

ORIGINATOR I. HARRIS DATE 10-14-63

TITLE MIXER 19.438 MHZ

MJO 4126-01-01

ENGINEERING SKETCH
SPACE TECHNOLOGY LABORATORIES, INC.
LOS ANGELES, CALIFORNIA

SK A-11306-4

SHEET OF

STL Form 523B (Rev. 2-59)

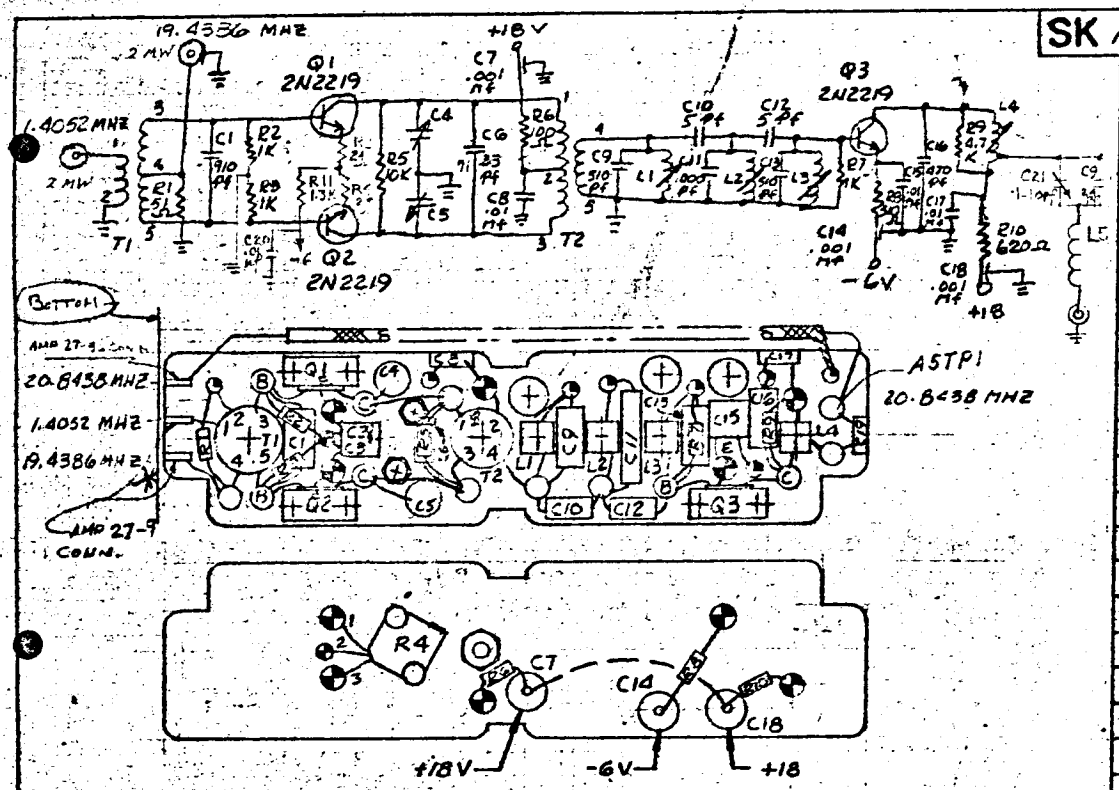

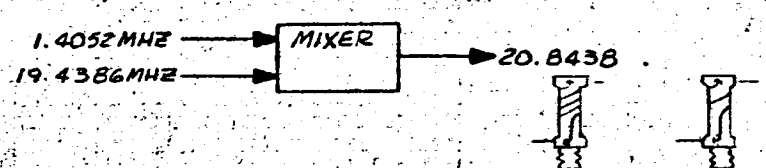

T1 9T #28 PRIM ~~17T~~ #28 360° SEC 25T BIFLAR 360° (50 T TOTAL) #28

T2 PRIM 7T BIFLAR 360° (~~14T TOTAL~~) #28 SEC 9T #28 360°

L1 & L3 4T #22

L2 2T #22

L4 4T TAP 1T FROM BOTTOM #22

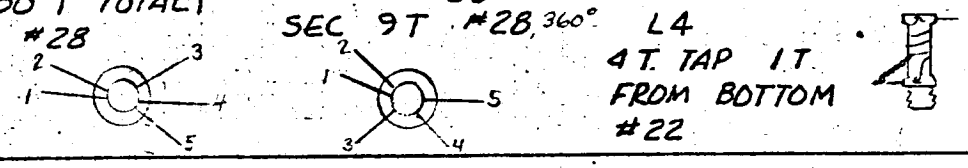

SK A-11306-3 CHG LTR

RESISTOR 1.3K R2
COIL 1.5mh AC/DC CHOKE

NO REQD	MFR OR STL PART NO	MFR	DESCRIPTION	SYM
13	4073-062	LERCO	TERMINAL INSUL	
5	4442-B-9	USECO	INSUL FEED THRU	
8	1280B/ET2064	USECO/STL	GRD	
1	ET2066	STL	TERMINAL GRD FEED THRU	
3	A-11022	STL	HEAT SINK (TO-5)	
3	2N2219	MOTOROLA	TRANSISTOR	Q1, Q2, Q3
1	T44-6	MICRO METALS	TRANSFORMER	T2
1	T50-2	MICRO METALS	TRANSFORMER	T1
4	A-11021	STL	COIL FORM	L1, L2, L3, L4
1			24 pf CAPACITOR	C9
1	VY16C471J	VITRAMON	470 pf CAPACITOR	C16
1	VY21C102J		1000 pf	C11
2	VY12C5R1J		5.1 pf	C10, C12
2	VY16C511J	VITRAMON	510 pf	C13
3	SS5A-102W	ALLEN BRADLEY	.001 mf	C7, C14, C18
1	VY12C330J	VITRAMON	~~33 pf~~ 71 pf	C6
2	JMC2950	JOHANSON	.8 TO 10 pf	C4, C5
~~6~~ 4	VK30CW103K	VITRAMON	.01 mf	C20 C2, C3, C8, C15, C17, C19
1	VY16C911J	VITRAMON	910 pf CAPACITOR	C1
1	JPDM601		1-10 pf CAPACITOR VARIABLE	C21
2			.24 Ω RESISTOR	R4, R3
1			620 Ω RESISTOR 1/4W	R10
1			4.7K	R9
1			510 Ω	R8
1			100 Ω	R6
1			10K	R5
3			1K	R2, R7
1			51 Ω RESISTOR 1/4W	R1

ORIGINATOR House DATE 10-10-63

TITLE MIXER 20.8438 MHZ

MJO 4126-01-01

ENGINEERING SKETCH
SPACE TECHNOLOGY LABORATORIES, INC.
LOS ANGELES, CALIFORNIA

SK A-11306-3

SHEET 1 OF 1

STL Form 5230 (Rev. 2-59)

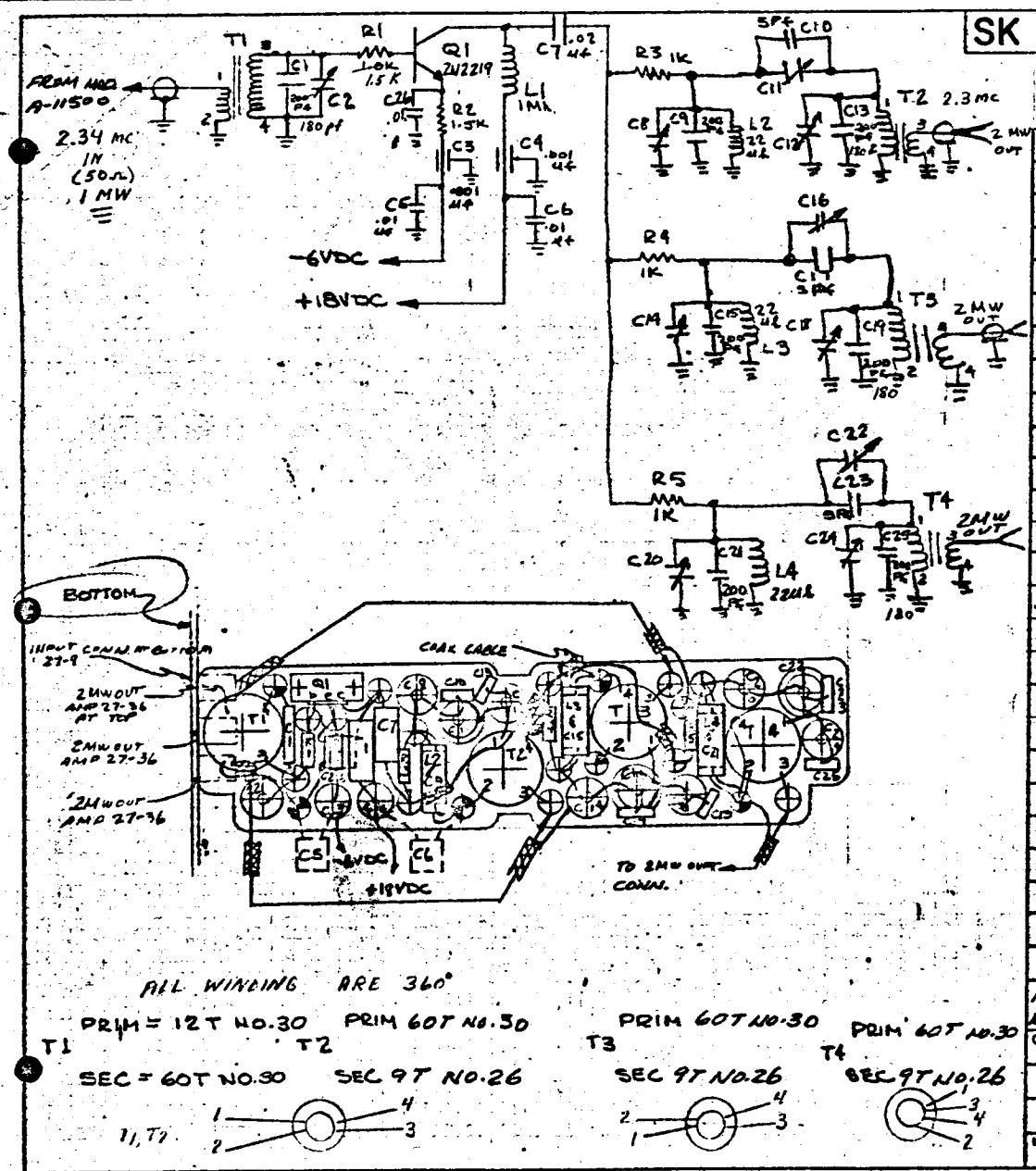

SK

NO. REQD	MFG OR STL PART NO.	MFG	DISCRIPTION	REF DESIG
13	4073-062	LERCO	TERMINAL INSULATED	
2	ET2066	STL	TERMINAS GRD FEED/THRU	
6	1280B/206#	USECO/STL	TERMINAS GRD STD/OFF	
1	A-11022	STL	HEATSINK TRANSISTOR	
3	JMC2950	JOHANSON	.8-10 PF CAPACITOR	C11, C16 & C22
6	MC603	JFD	1-28 PF	C8, C12, C14, C18, C20 & C24
1	MC80V203K	AEROVOX	.02 uf	C7
2	FA5C-102W	ALLEN BRADLEY	CAPACITOR FEED THRU	C3 & C4
3	VK306CW103K	VITRAMON	.01 uf	C5, C6 & C26
3	CYFM10C050J	CORNING	5 PF	C10, C17, C23
4	CYFM10C201J	CORNING	200 PF CAPACITOR	C1, C9, C13, C15, C19, C21 & C25
4			180 PF	C13, C19, C21, C25
2	T50-2	MICROMETALS	COIL FORM	T1-T4
1	2N2219	TEXAX I.	TRANSISTOR	Q1
3		ACDC	CHOKE RF 22 uh	L2, L3 & L4
1		ACDC	CHOKE RF 1 Mh	L1
1			1.5 K	R1
1			RESISTOR 1.5K 1/4W ± 5%	R2
2			RESISTOR 1K 1/4W ± 5%	R1, R3 & R4

ORIGINATOR D.E. Anderson DATE 10/21/63

TITLE 2.34 MC POWER DIVIDER

ENGINEERING SKETCH
SPACE TECHNOLOGY LABORATORIES, INC.
LOS ANGELES, CALIFORNIA

SK A-11306-5

SHEET OF

MJO

24 hrs

STL Form 523B (Rev. 2-59)

SK | CHG LTR

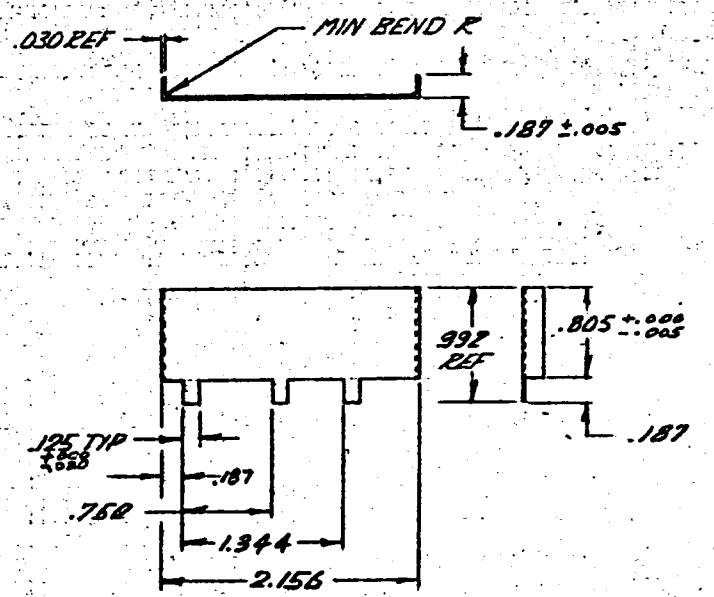

MATERIAL — .03 SHT — 6061-T6 ALALY — QQ-A-287a
FINISH — . ELECTROLESS NICKLE .001 THK PER STL SPEC P6-5

ORIGINATOR	DATE	TITLE	ENGINEERING SKETCH
T. HARRIS	10-19-63	R.F SHIELD	SPACE TECHNOLOGY LABORATORIES, INC. LOS ANGELES, CALIFORNIA
			SK A-11306-400
MJO			SHEET 1 OF ~~A-11305-400~~

STL Form 5238 (Rev. 2-59)

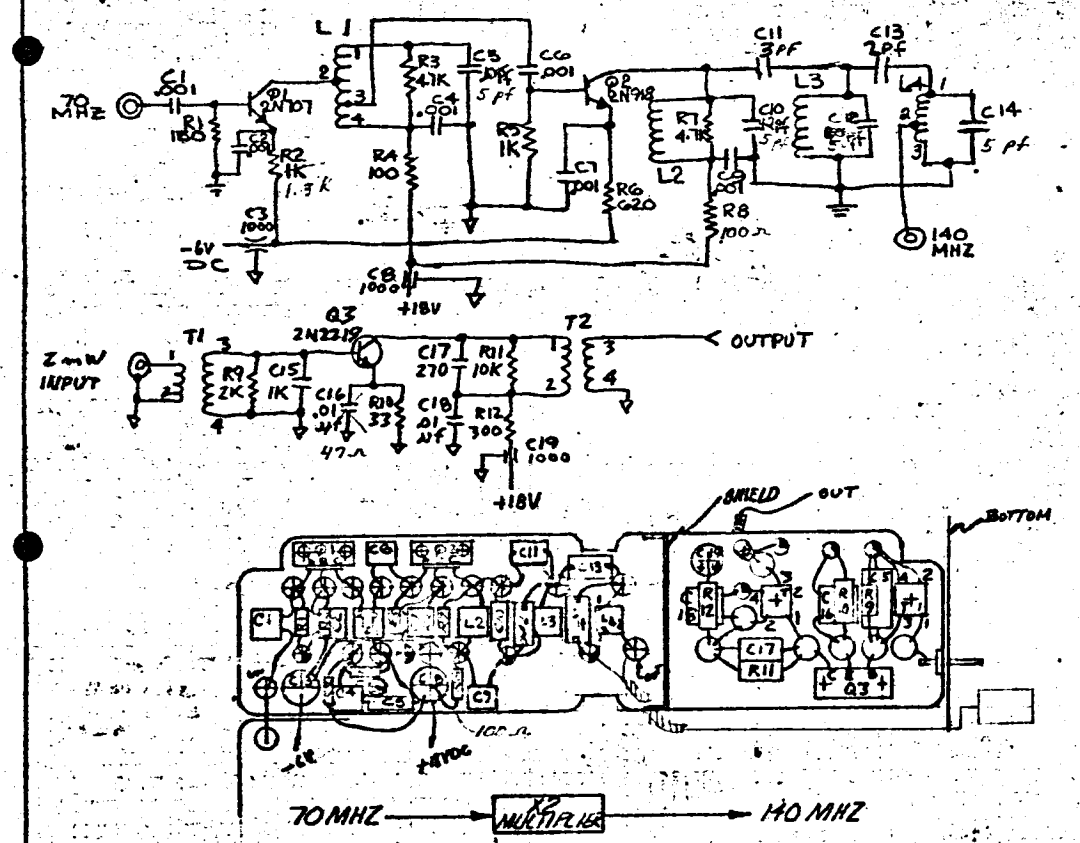

L1
4T CT. 7/8 T FROM TOP
7/8 T FROM BOTTOM
#22 GA FORMVAR

L2
4T #22 GA
FORMVAR

L3
4T BTW

L4
4T CT. 3/4T
FROM BOTTOM

	T1	T2
PRI.	12T	36T
SEC.	36T	36T

SK | CHG LTR

NO REQD	MFR OR STL PART No	MFR	DESCRIPTION	SYM
1	A-11022	STL	HEAT SINK, BORON NITRATE	Q3
1	VY12C271J	VITRAMON	270 PF	C17
2	VK30CW103K	VITRAMON	.01 µf	C16, 18
1	VY16C102J	VITRAMON	1000	C15
1	2N2219	MOTOROLA	TRANSISTOR	Q3
23			TERMINAL INSUL	
9	1280B/ET2084	USECO/STL	TERMINAL GRD	
2	A-11024	STL	HEAT SINK (TD-18)	Q1, 2
1	2N918		TRANSISTOR	Q2
1	2N707		TRANSISTOR	Q1
1	A-11307-100	STL	STD SHIELD	
6	A-11021	STL	COIL FORM T1, 2	L1, L2, L3, L4
1	VY12C3R0J	VITRAMON	3 PF CAP	C11
1	VY12C2R0J	VITRAMON	2Pf CAPACITOR	C13
2	VY12C200K		20Pf	C12, C14
1	VY12C120K		12 Pf	C10
1	VY12C100K		10Pf	C5
6	VK20CW102K	VITRAMON	.001 µf	C6, C7, C8, C9, C11, C13
3	FA5C-102W	ALLEN BRADLEY	.001 µf CAPACITOR	C3, 8, 19
1 1			47Ω 2K	R10 R9
1			1.3K RESISTOR 1/4W ±5%	R8
1 1			300Ω 10K	R12 R11
1 1			620Ω 100Ω	R6 R4, R3
2			4.7K	R3, R7
2			1K	R2, R5
1			150Ω RESISTOR 1/4W	R1

ORIGINATOR	DATE	TITLE	
J.E. Anderson Jr	11/29/65	X2 MUL 140 MHZ	ENGINEERING SKETCH SPACE TECHNOLOGY LABORATORIES, INC. LOS ANGELES, CALIFORNIA
MJO 9126-01-01			SK A-11307-1 SHEET 1 OF 1

STL Form 5238 (Rev. 2-59)

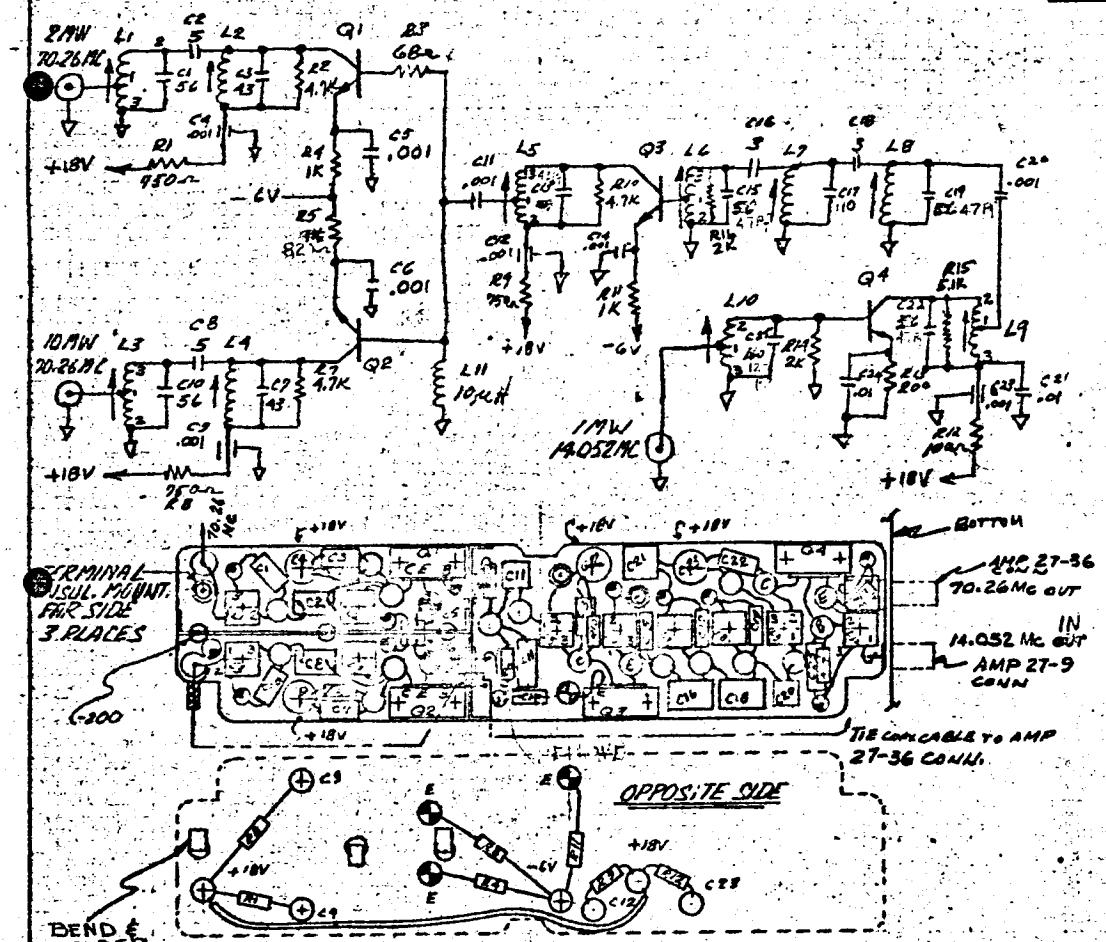

L1 – 4T TURNS NO.22 WIRE TAP 1 TURN FROM BOTTOM
L2 – 4T TURNS NO.22 WIRE
L3 – 4T TURNS NO.22 WIRE TAP 1 TURN FROM BOTTOM
L4 – 4T TURNS NO.22 WIRE
L5 – 4T TURNS NO.22 WIRE TAP 1 TURN FROM BOTTOM
L6 – 4T TURNS NO.22 WIRE TAP 1 TURN FROM BOTTOM
L7 – 2T TURNS NO.22 WIRE
L8 – 4T TURNS NO.22 WIRE
L9 – 4T TURNS NO.22 WIRE TAP 2 TURNS FROM BOTTOM
L10 – 20T TURNS NO.24 FORMVAR WIRE TAP 7 TURNS FROM BOTTOM

SK

NO. REQ'D	MFR OR STL PART NO.	MFR	DESCRIPTION	SYM
2	SP0089-1	STL	TERMINAL INSUL	
20	4073-062	LERCO	TERMINAL INSUL	
10	1280B/ET2084	STL	TERMINAL GND	
3			TERMINAL INSUL. FEED THRU	
		CORNING	47Pf CAPACITOR	C22, C15, C19
4	A-11022	STL	HEAT SINK TO-5	
4	2N2219	MOTOROLA	TRANSISTOR	Q1, Q2, Q3, Q4
1		ACDC	10μh CHOKE	L11
10	A-11021	STL	COIL FORM	L1 THRU L10
1	VYRC160J	VITRAMON	120 PF CAPACITOR	C25
2	VK30CW103J	VITRAMON	.01μf "	C21 & C24
1	VYRC110J	VITRAMON	91 Pf "	C17
2	VYRC300J	VITRAMON	3 Pf "	C16 & C18
1	VYRC430J	VITRAMON	43 Pf "	C13
5	VK30CW102K	VITRAMON	.001uf "	C5, C6, C11, C14 & C20
4	FA5C-102W	ALLEN BRADLEY	.001uf " FEED THRU	C1, C9, C12 & C23
2	VYRC430J	VITRAMON	43 Pf "	C3 & C7
2	VYRC500J	VITRAMON	5 Pf "	C2 & C8
5	VYRC560J	VITRAMON	56 Pf "	Q1, Q2, Q3, Q4 & Q5
			CONES 27-002.	
2			2K RESISTOR 1/4 W 5%	R14, 16
1			200Ω " " "	R13
1			100Ω " " "	R12
1			5.1KΩ " " "	R15
3			1K " " "	R4, R6 & R11
1			68Ω " " "	R3
3			4.7K " " "	R2, R7 & R10
3			750Ω " " "	R1, R8 & R9

ORIGINATOR J. HARRIS	DATE 10-9-63	TITLE	ENGINEERING SKETCH SPACE TECHNOLOGY LABORATORIES, INC. LOS ANGELES, CALIFORNIA
JB	10-23-63		SK A-11307-2
MJO 4186-01-01			SHEET OF

STL Form 5238 (Rev. 2-64)

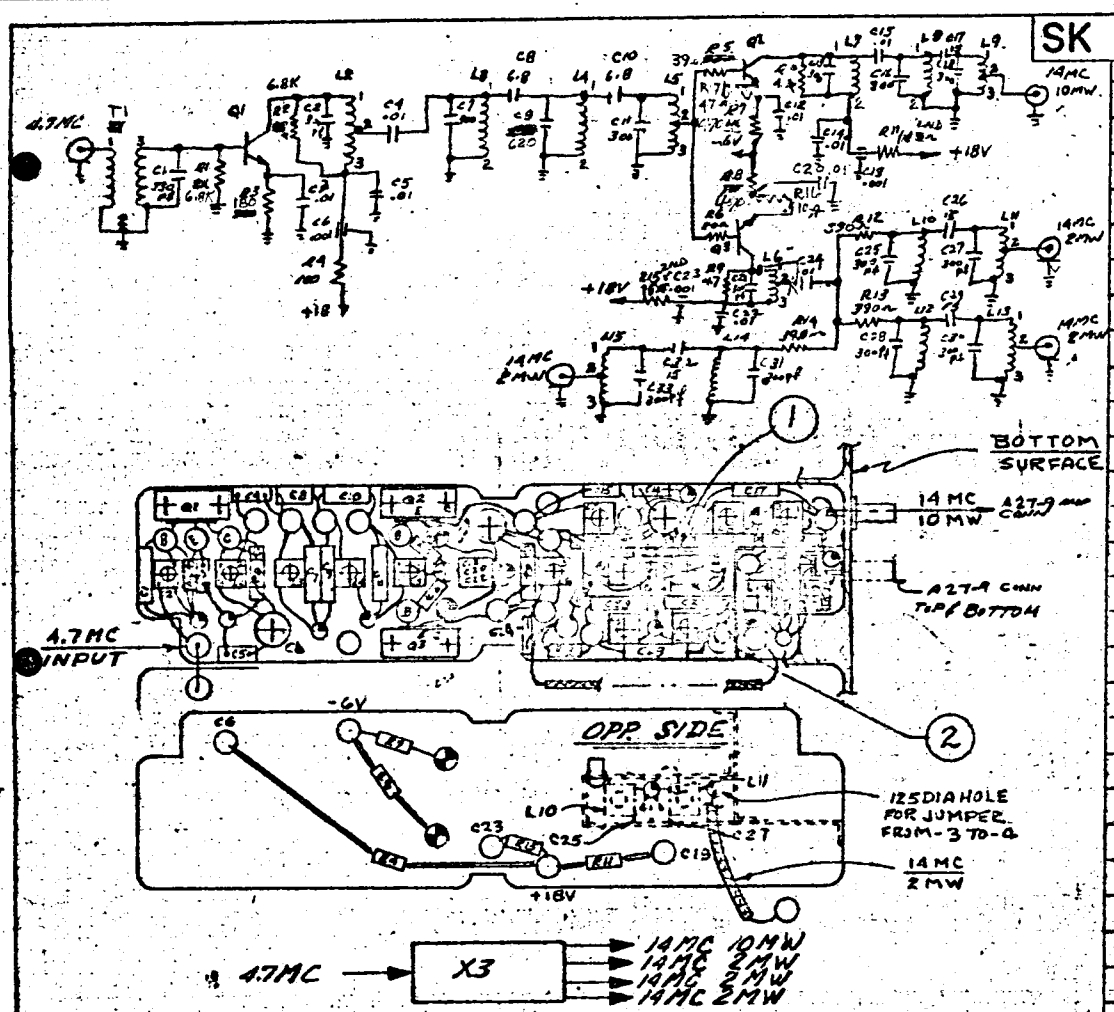

L1 35T NO.30 GAGE WIRE
L2 10T NO 22 GAGE WIRE TAP 5 TURNS FROM BOTTOM
L4 5T NO. 22 GAGE WIRE
L6 & L5 10T NO.22 GAGE WIRE TAP 4 TURNS FROM BOTTOM
L3, L7, L8, L10, L12 & L14 10T NO. 22 GAGE WIRE
L9, L13, L11 & L15 10T NO.22 GAGE WIRE, TAP 2 TURNS FROM BOTTOM

SK

NO. REQD	MFR OR STL PART NO.	MFR	DESCRIPTION	SYM
1			4.7Ω RESISTOR	R17
3	SP0006	STL	TERMINAL GLASS TO METAL	
15	A-11021	STL	COIL, FORM	
24	4073-062	LERCO	TERMINAL INSUL	
12	12808/E2706A	STL	TERMINAL GND	
2			TERMINAL, INSUL THRU	
3	A-11022	STL	HEAT SINK TO-5	
3	2N2219	MOTOROLA	TRANSISTOR	Q1, Q2 & Q3
			CORES 24-0015	
4	CYFM20C150J	CORNING	15 PF CAPACITOR	C17, C26, C29 & C32
1	CYFM15C571J	CORNING	620 PF "	C9
2	VY12C6R8	VITRAMON	6.8 PF "	C8 & C10
3	FA5C-102W	ALLEN BRADLEY	.001 µf " FEED THRU	C6, C19 & C23
9	VF306CW103K	VITRAMON	.01 µf "	C3, C4, C5, C12, C14, C15, C20, C22 & C24
13	CYFM15C301J	CORNING	300 PF "	C2, C7, C11, C13, C16, C18, C21, C25, C27, C28, C30 & C31
1	CYFM15C331J	CORNING	330 PF "	C1
			10Ω RESISTOR	R16
3			390Ω RESISTOR 1/4 W 5%	R12, R13 & R14
2			150Ω " " "	R11 & R15
2			56Ω " " "	R7 & R8
1			20Ω " " "	R6
1			33Ω " " "	R5
1			100Ω " " "	R4
1			180 " " "	R3
3			4.7K " " "	R9, R10 & R[illegible]
2			6.8K " " "	R1 & R2

ORIGINATOR	DATE	TITLE
T. HARRIS	10-21-63	
MJO 4126-01-01		

ENGINEERING SKETCH
SPACE TECHNOLOGY LABORATORIES, INC.
LOS ANGELES, CALIFORNIA

SKA-11307-3

SHEET OF

STL Form 5238 (Rev. 2-59)

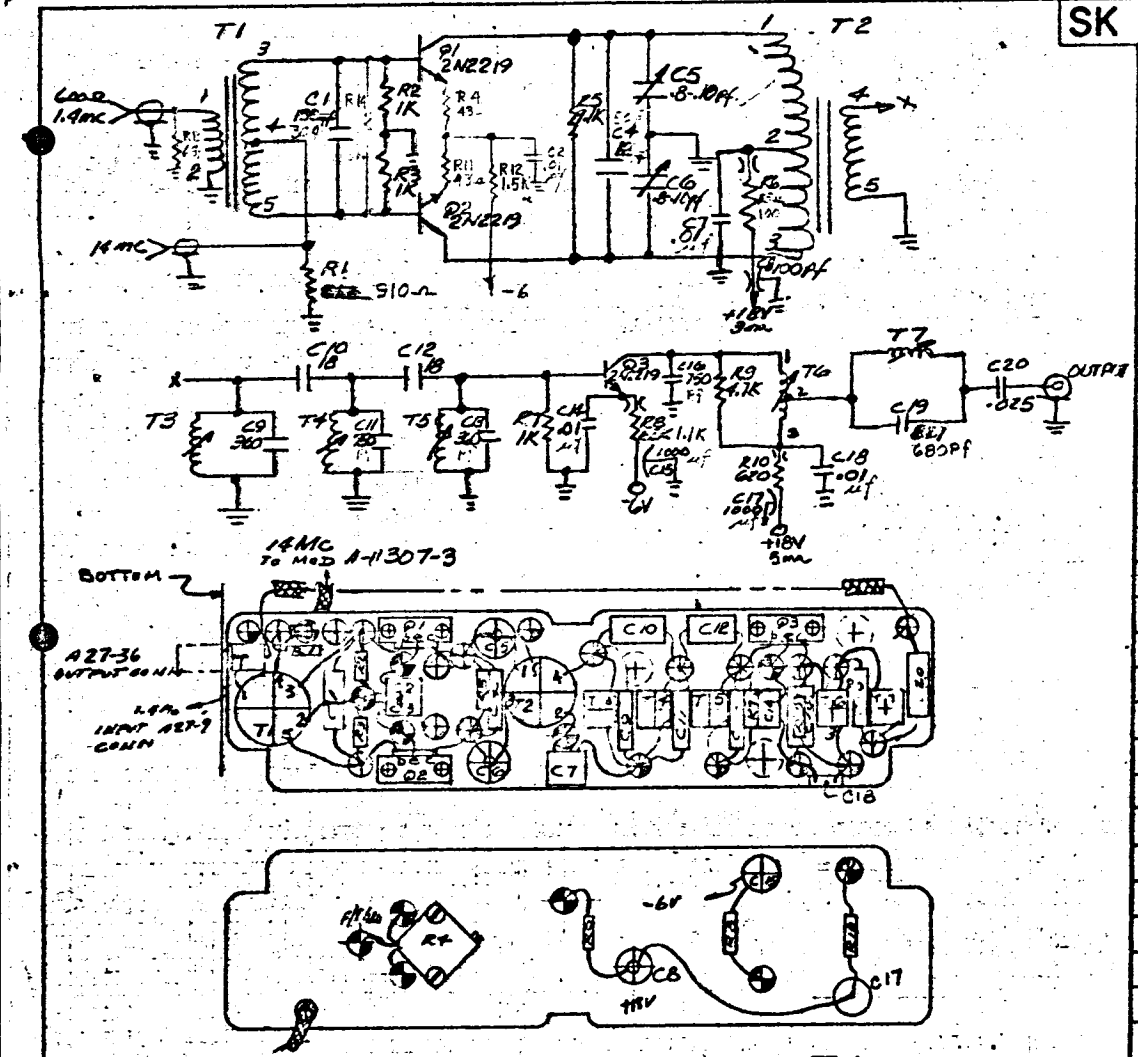

T1 24T 26
PRI- 70T 28GA
SEC- 100T 28GA
CT BIFILAR
40T 26

T2 PRI- 30T 28 GA
BIFILAR
SEC- 30T 28GA
14T 26

T3, T5
12T 22 GA

T4
6T 22GA

T6
7T 22GA
1½T 22GA C.T.

T7
2T 22GA

SK		CHG LTR		
1			3K RESISTOR	R14
			68Ω RESISTOR	R13
1			1.5K RESISTOR	R12
5			TERMINAL FEED/THRU	⊕
14	4073-062	LERCO	TERMINAL INSULATED	⊕
1	ET2066	STL	TERMINAL GRD FEED/THRU	⊕
6	1280D/ET2068	USECO STL	TERMINAL GRD STD/OFF	⊕
5	A-11021	STL	COIL FORM	
3	A-11022	STL	HEAT SINK TO-5	
3	2N2219	MOTOROLA	TRANSISTOR	Q1,Q2,Q3
2	T50-2	MICRO-METALS	COIL FORM	
1	MC80V223AK	AEROVOX	.025 µf CAPACITOR	C20
1	CYFM15C821J	CORNING	8 Pf 680Pf	C19
2	SS5A-102W	ALLEN BRADLEY	.001 µf STAND OFF	C15, C17
2	CYFM15C751J	CORNING	750 pf	C11, C16
2	CYFM10C180J	CORNING	18 pf	C10, C12
2	CYFM15C361J	CORNING	360 pf	C9, C13
1	CYFM10C101J	CORNING	100 Pf	C8
2	JMC2950	JOHANSON	.8-.10 Pf	C5, C6
1	CYFM10C120J	CORNING	12 Pf 56 Pf	C4
5	VF306CW103K	VITRAMON	.01 µf	C2, C7, C14, C18
1	CYFM10C151J	CORNING	150 Pf CAPACITOR 300 Pf	C1
5	2400-1	STL	COIL FORM	
2			43Ω RESISTOR	R11, R4
1			620Ω RESISTOR 1/4W, 5%	R10
1			4.7K	R9
1			1.1K	R8
1			100Ω	R6
1			9.1K	R5
3			1K	R2, R3, R7
1		910Ω	RESISTOR 1/4W, 5%	R1
NO REQD	MFR OR STL PART No	MFR	DESCRIPTION	SYM

ORIGINATOR J.E. Anderson
DATE 10/30/6
TITLE MIXER
MJO 4126-01-01

ENGINEERING SKETCH
SPACE TECHNOLOGY LABORATORIES, INC.
LOS ANGELES, CALIFORNIA

SK A-11307-4
SHEET OF

STL Form 5238 (Rev. 2-59)

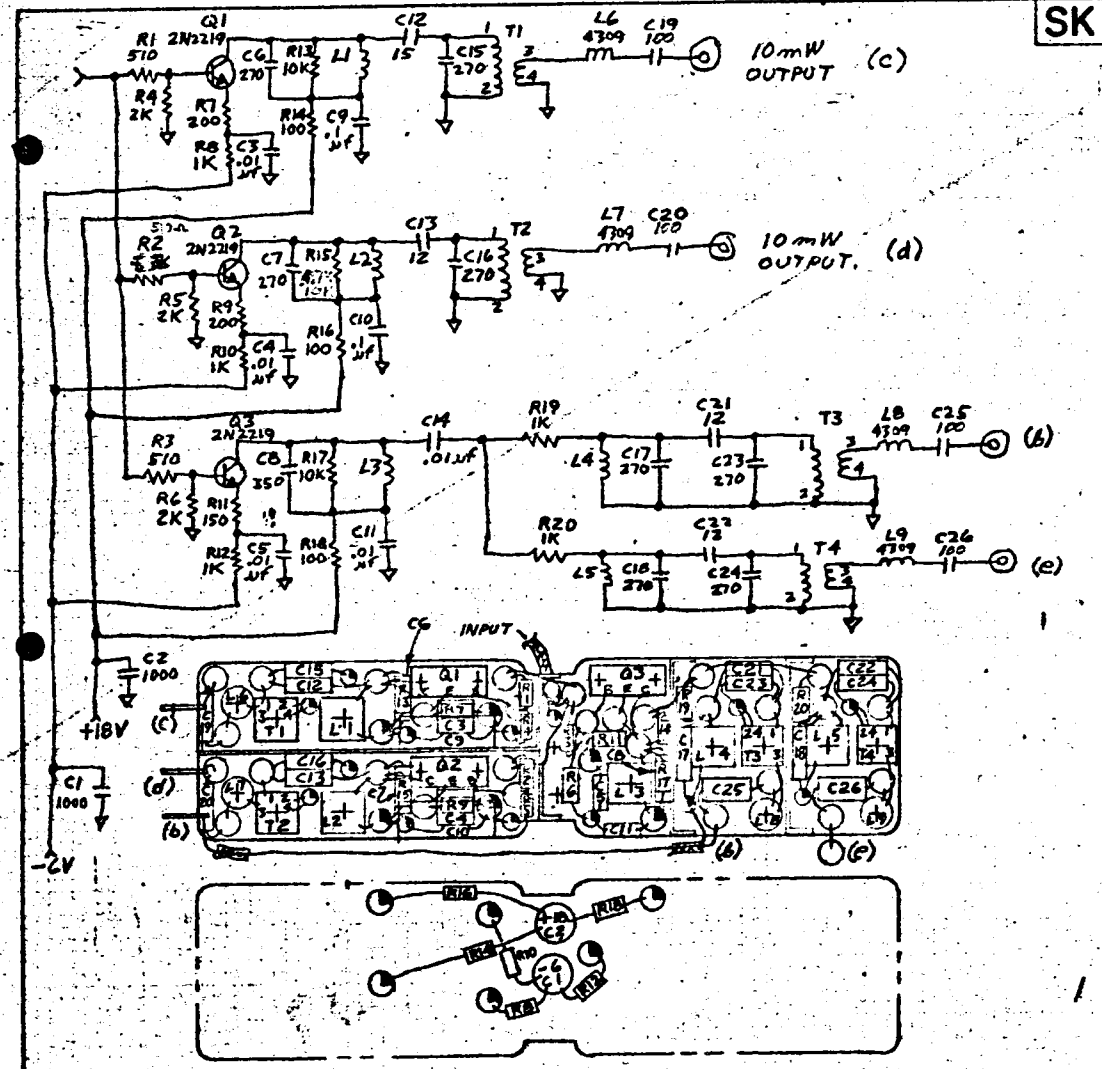

T1	T2	T3	T4	L1,2,3,4,5
PRI. 36T	36T	36T	36T	36T
SEC. 8T	12T	7T	4T	

SK

NO. REQD.	MFR OR STL PART NO.	MFR	DESCRIPTION	SYM
6	4442-B-9	USECO	TERMINAL, INSUL F/T	
29	4073-062	LERCO	TERMINAL, INSUL S/O	
14	ET 2064	STL	TERMINAL, GRD	
3	A-11022	STL	HEAT SINK, BORON NITRATE	
4	4309	MILLER	INDUCTOR, VARIABLE	L6,7,8,9
5	A-11021	STL	COIL FORM	L1,2,3,4,5
3	2N2219	MOTOROLA	TRANSISTOR	Q1,2,3
			CORES (SLUG) 24-0019	
4	VY12C101J	VITRAMON	100 CAPACITOR	C19,20,25,26
3	VY12C120J	VITRAMON	12	C13,21,22
1	VY12C150J	VITRAMON	15	C12
2	MC80V104AK	AEROVOX	.1 µf	C9,10
1	VY12C351J	VITRAMON	350	C8
8	VY12C271J	VITRAMON	270	C6,7,15,16,17,18,23,24
5	VK30CW103K	VITRAMON	.01 µf	C3,4,5,11,14
2	SS5A-102W	ALLEN/BRADLEY	1000 CAPACITOR S/O	C1,2
1			4.3K RESISTOR	R15
3			100Ω	R14,16,18
2			10K	R13,17
1			150Ω	R11
5			1K	R8,10,12,19,20
2			200Ω	R7,9
3			2K	R4,5,6
1			1.5K	R2
2			510Ω RESISTOR	R1,3

ORIGINATOR L.L. FREED
DATE 11-13-63
TITLE POWER DIVIDER
MAD 4126-01-02

ENGINEERING SKETCH
SPACE TECHNOLOGY LABORATORIES, INC.
LOS ANGELES, CALIFORNIA
SK A-11307-5
SHEET OF

STL Form 5238 (Rev. 2-59)

SK | CHG LTR

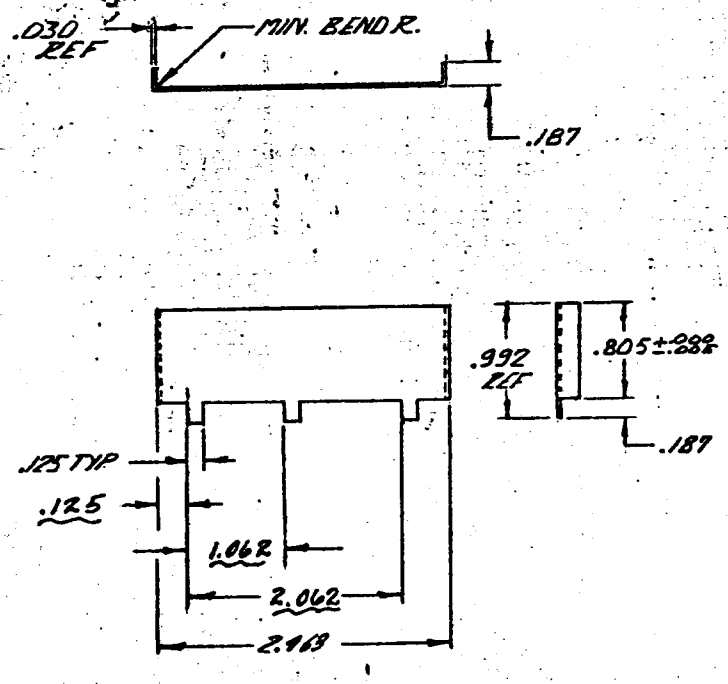

MATERIAL ___. .03 SHT — 6061-T6 AL ALY — QQ-A-287a

FINISH ___. ELECTROLESS NICKEL .001 THK PER STL SPEC P6-3

ORIGINATOR	DATE	TITLE	ENGINEERING SKETCH
I. HARRIS	10-9-63	R.F. SHIELD	SPACE TECHNOLOGY LABORATORIES, INC. LOS ANGELES, CALIFORNIA
J.B.	10-23-63		SK A-11307-200
MJO: 4126-01-01			SHEET OF

STL Form 5238 (Rev. 2-59)

SK CHG LTR

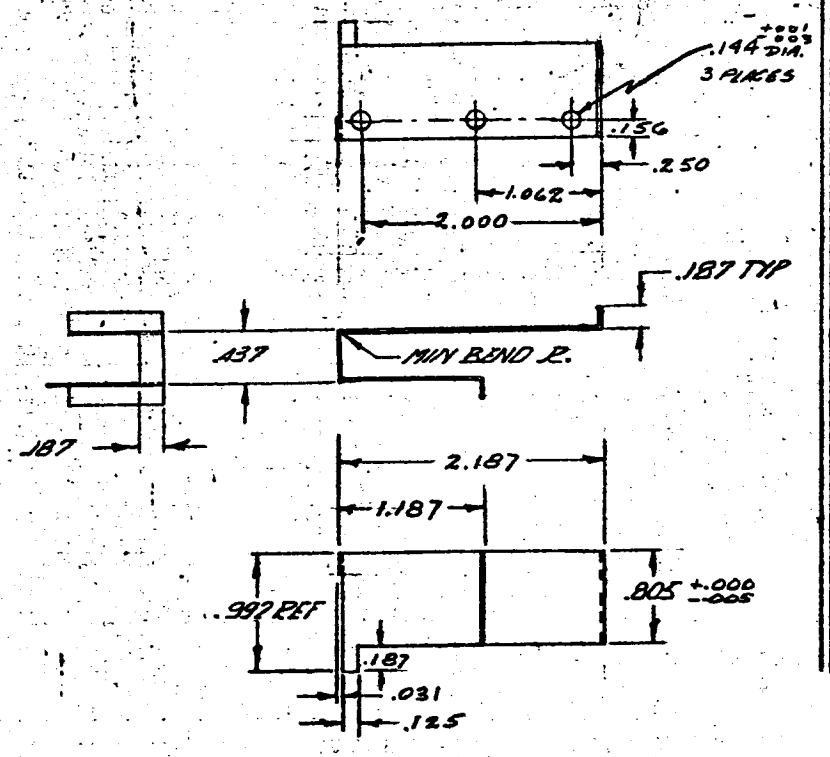

-1

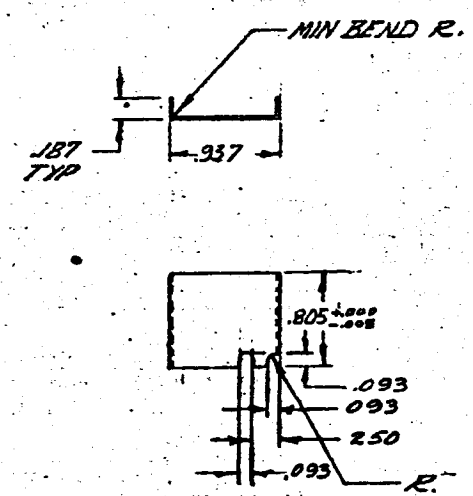

-2

MATERIAL ..03 SHT — 6061-T6 AL ALY — QQ-A-287a
FINISH . ELECTROLESS NICKEL .001 THK PER STL SPEC P6-3

ORIGINATOR	DATE	TITLE	ENGINEERING SKETCH
T. HARRIS	10-21-63	RF SHIELD	SPACE TECHNOLOGY LABORATORIES, INC. LOS ANGELES, CALIFORNIA
			SK A-11507-300
MJO 4126-01-01			SHEET OF

STL Form 5338 (Rev. 2-59)

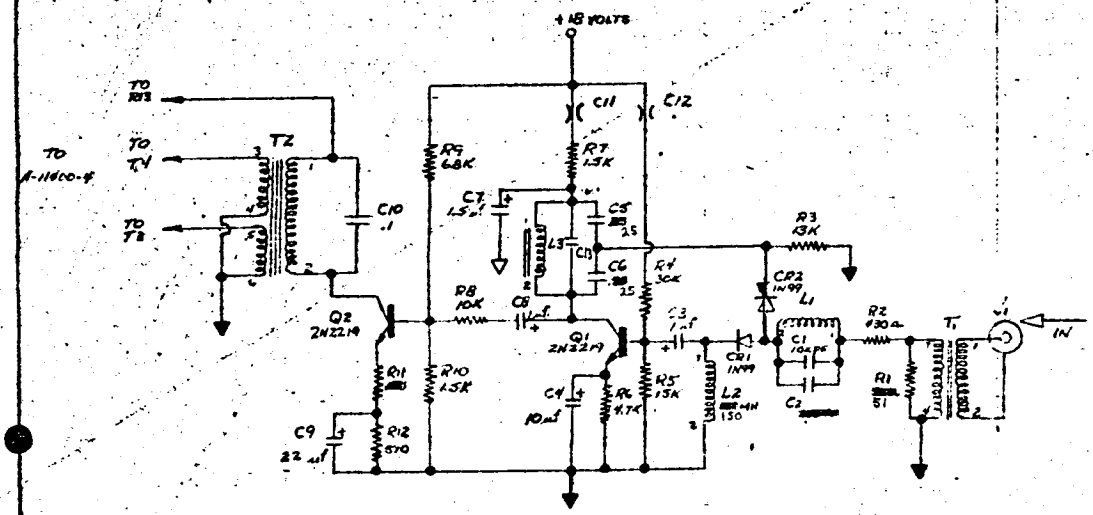

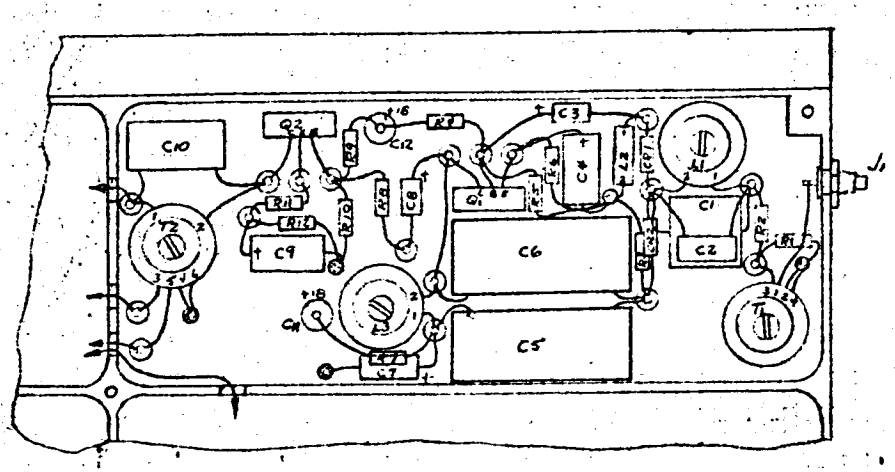

SK A-11400-1A

NO. REQD.	MFG PART OR STL NO.	MFR.	DESCRIPTION	SYM.
1		CORNING	CAPACITOR 5200PF -① 1500PF -②	C13
5			TERMINAL GROUND	●
18			TERMINAL INSUL.	◎
1	27-9	AMPHENOL	SUB MINAX CONNECTOR	J1
2		SYLVANIA	1N99 DIODE	CR1, CR2
2	FASC-102W	ALLEN BRADLEY	.001 FEED THRU CAPACITOR	C11, C12
2	A-11021	STL	HEAT SINK BORON/NITRATE	
2	2N2219	MOTOROLA	TRANSISTOR	Q1, Q2
4	55120	MAGNETICS	CORE	T1, L1, L3, T2
1		ESSEX	MH 150 WEE-DUCTOR	L2
1		ELMENCO	.1µf CAPACITOR	C10
1		SPRAGUE	22µf 35V TANTALUM	C9
1		SPRAGUE	1.5µf 35V TANTALUM	C7
2		ELMENCO	.25µf	C5, C6
1		SPRAGUE	10µf 15V TANTALUM	C4
2		SPRAGUE	1µF 35V TANTALUM	C3, C8
1		CORNING	620PF -① 510PF -②	C2
1		ELMENCO	10KPF CAPACITOR	C1
1			510Ω RESISTOR ¼W 5%	R12
1			150Ω -② 200 -①	R11
1			6.8K	R9
1			10K	R8
2			1.5K	R7, R10
1			4.7K	R6
1			15K	R5
1			30K	R4
1			13K	R3
1			430	R2
1			51Ω RESISTOR ¼W 5%	R1

ORIGINATOR	DATE	TITLE	
F. FOWLER	20 NOV 65	DIVIDER	ENGINEERING SKETCH SPACE TECHNOLOGY LABORATORIES, INC. LOS ANGELES, CALIFORNIA
MJO			SK A-11400-1 SHEET 1 OF 1

STL Form 5238 (Rev. 2-59)

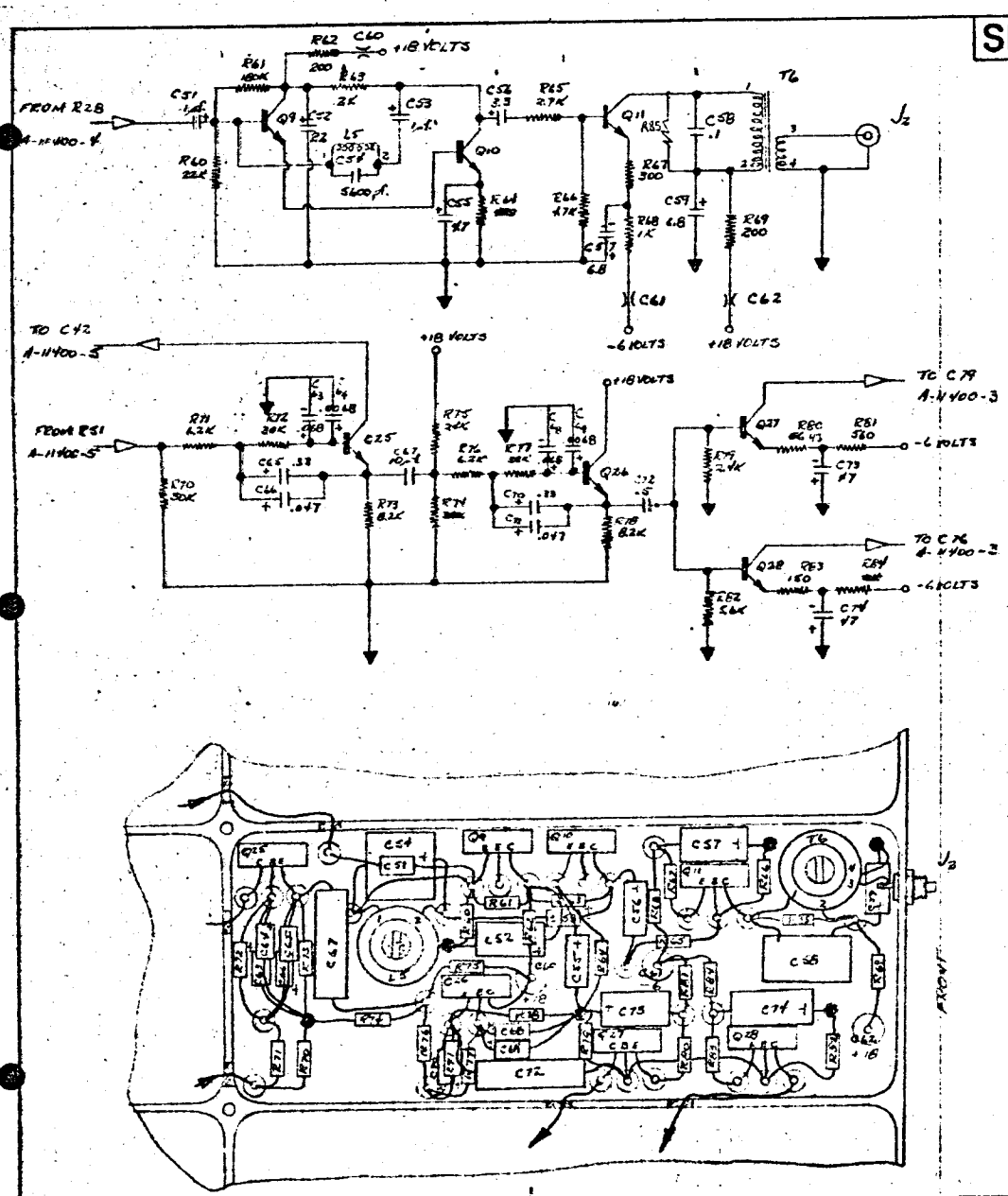

SK

CHG LTR

6			TERMINAL, GROUND	●
32			TERMINAL, INSUL	©
3	FASC-102W	ALLEN BRADLEY	.001 FEED THRU. CAPACITOR	C60, 61, 62
2	55120	MAGNETICS	CORE	L5, T6
1	27-9	AMPHENOL	SUB-MINAX CONNECTOR	J2
7	A-11021	STL	HEAT SINK BORON/NITRIDE	
7	2N2219	MOTOROLA	TRANSISTOR	Q9, 10, 11 Q25, 26, 27, 28
1			16 K - ① 7.5 K - ②	R85
1			13 K - ① 20 K - ② RESISTOR 1/4 W	R74
1			1 K - ① 470 Ω - ②	R84
1			150 Ω - ① 130 Ω - ② RESISTOR 1/4 W 5%	R83
1			5.6 K	R82
1			560 Ω	R81
1			43 Ω	R80
1			2.4 K	R79
1			24 K	R75
2			8.2 K	R73, R78
2			6.2 K	R71, R76
3			30 K	R70, R72, R77
1			1 K - ① 470 Ω - ②	R68, R84
1			300 Ω - ① 100 Ω -	R67
1			4.7 K	R66
1			2.7 K	R65
1			220 Ω - ① 470 Ω - ②	R64
1			2 K	R63
2			200 Ω	R62, R69
1			180 K	R61
1			22 K RESISTOR 1/4 W 5%	R60

ORIGINATOR FRANK FOWLER	DATE 26 NOV 63	TITLE	ENGINEERING SKETCH SPACE TECHNOLOGY LABORATORIES, INC. LOS ANGELES, CALIFORNIA
			SK A-11400-2
MJO			SHEET 1 OF 2

STL Form 523B (Rev. 2-59)

SK A-11400-1C | CHG LTR

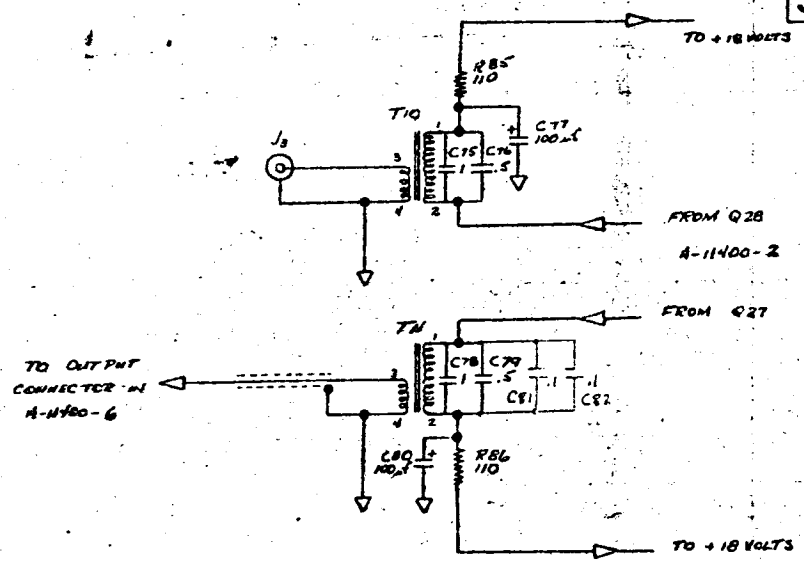

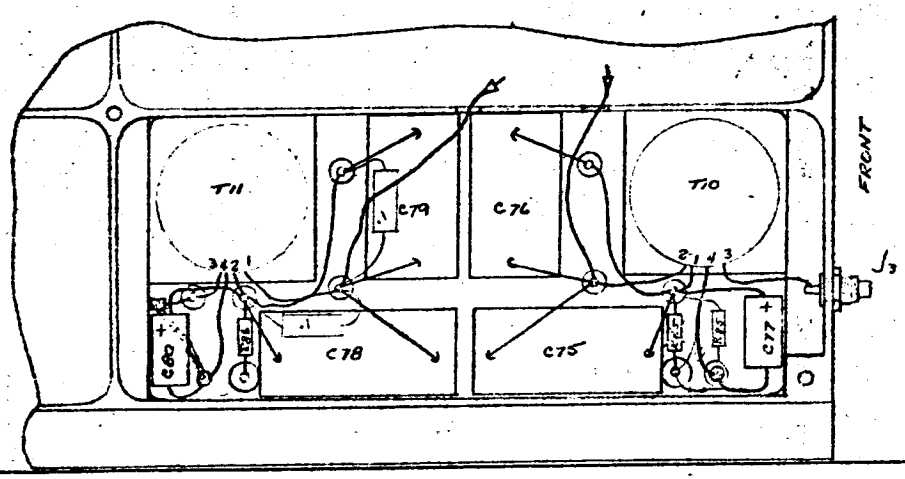

2			TERMINAL, GROUND	●
7			TERMINAL, INSUL.	⊖
2	58930	MAGNETICS	CORE	T10, T11
1	27-9	AMPHENOL	SUB MINIAX CONNECTOR	J_3
1			1.0 µf - ① .7 µf - ②	C76
2			.1 µf CAPACITOR	C81, C82
1			.5 µf CAPACITOR	C79
2			1 µf CAPACITOR	C75, C78
2		SPRAGUE	100 µf CAPACITOR, TANTALUM 20V.	C77, C80
2			110 Ω RESISTOR 1/4 W 5%	R85, R86

ORIGINATOR F. FOWLER	DATE 21 Nov '63	TITLE	ENGINEERING SKETCH SPACE TECHNOLOGY LABORATORIES, INC. LOS ANGELES, CALIFORNIA
			SK A-11400-3
MJO			SHEET OF

STL Form 5238 (Rev. 2-59)

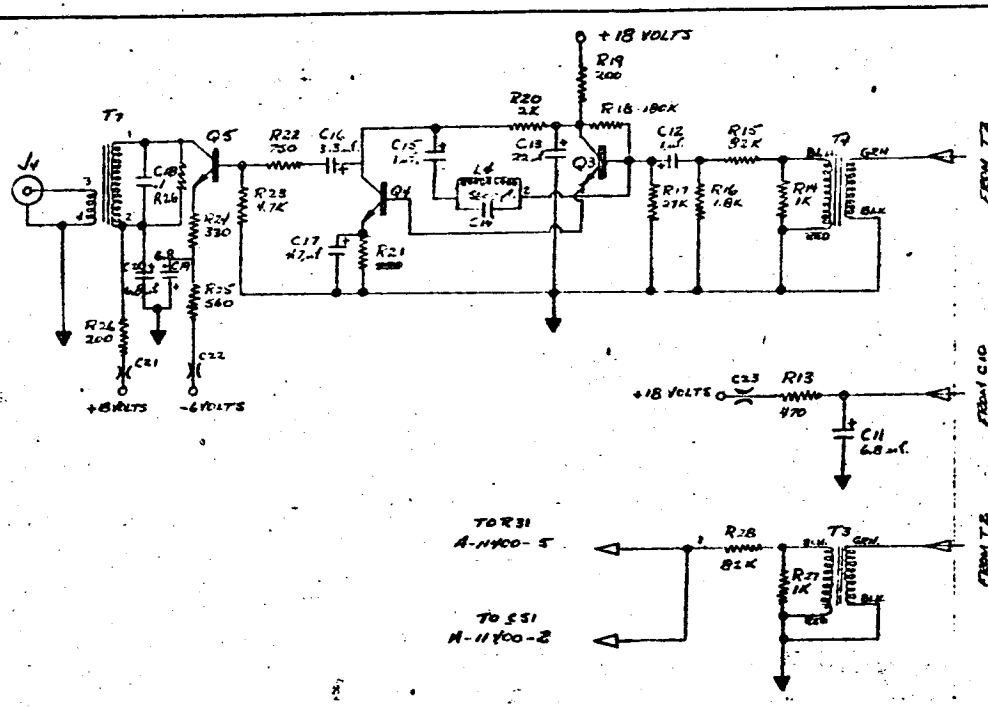

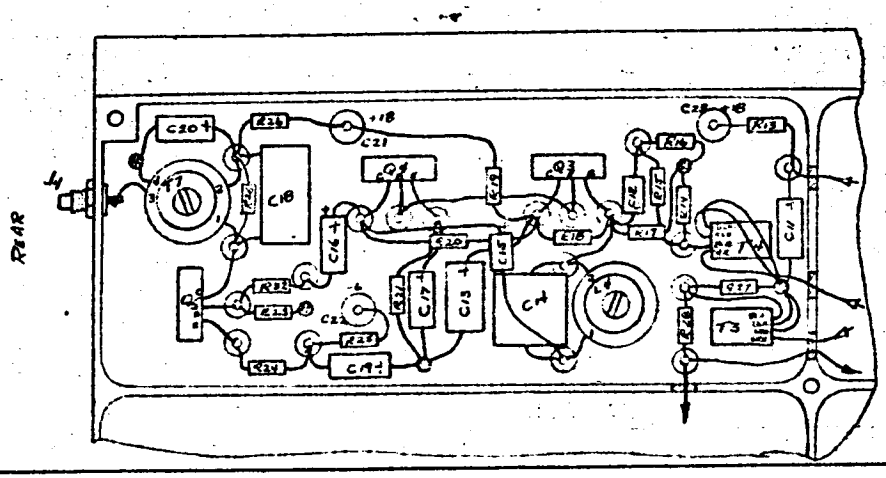

SK A-11400-1D | CHG LTR

5			TERMINAL, GROUND	●
19			TERMINAL, INSUL.	◎
3	FASC-102W	ALLEN BRADLEY	.001 FEED THRU CAPACITOR	C21,22,23
1	27-9	AMPHENOL	SUB MINIAT CONNECTOR	J1
3	A-11001	STL	HEAT SINK BORON/NITRATE	
3	2N2219	MOTOROLA	TRANSISTOR	Q3,4,5
2	55120	MAGNETICS	CORE	L4, T1
2	DO-T3		TRANSFORMER	T3, T4
1			NO RESISTOR - (2) 20K - (1)	R26
1			390Ω RESISTOR 1/4 W	R21
1		ELMENCO	.1 CAPACITOR	C18
1		ELMENCO	5600pf. CAPACITOR	C14
1		SPRAGUE	4.7µf 35V CAPACITOR, TANTALUM	C17
1			3.3µf 35V	C16
1			22µf 35V	C13
2			1µf 35V	C12,15
3		SPRAGUE	6.8µf 35V CAPACITOR, TANTALUM	C11,19,20
1			560Ω RESISTOR 1/4 W 5%	R25
1			330Ω - (1) ~~390Ω~~ - (2)	R24
1			4.7K	R23
1			750Ω	R22
1			2K	R20
2			200Ω	R19,26
1			180K	R18
1			27K	R17
1			1.8K	R16
2			82K	R15,28
2			1K	R14,27
21			470Ω RESISTOR 1/4 W 5%	R13,~~[illegible]~~

ORIGINATOR	DATE	TITLE	ENGINEERING SKETCH
F. FOWLER	21 NOV 63		SPACE TECHNOLOGY LABORATORIES, INC. LOS ANGELES, CALIFORNIA
			SK A-11400-4
MJO			SHEET 1 OF 1

STL Form 5238 (Rev. 2 59)

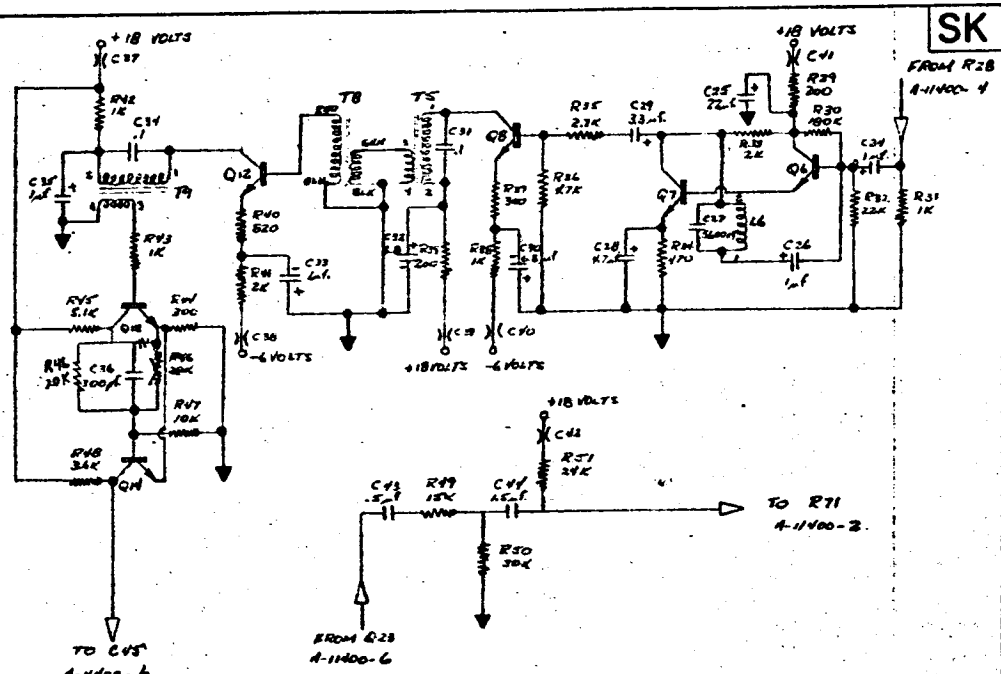

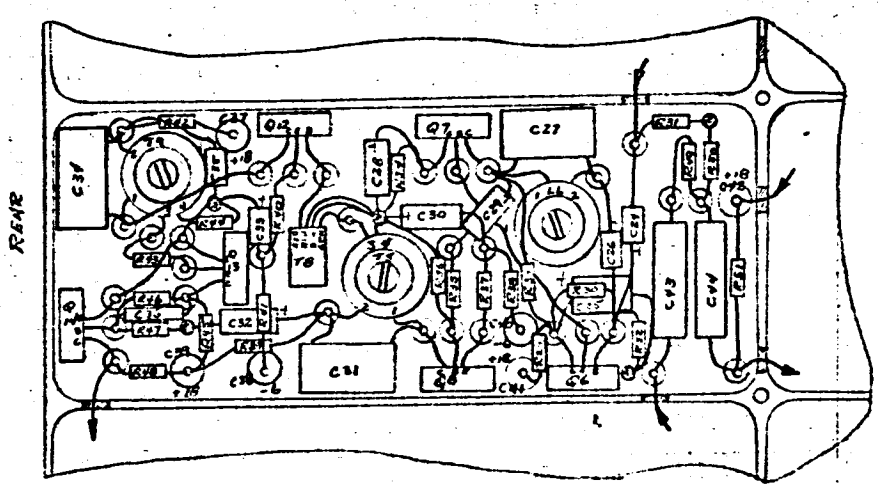

SK A-11400-1E				CHG LTR
5			TERMINAL, GROUND	○
32			TERMINAL, INSUL.	⊙
6	FASC-102W	ALLEN BRADLEY	.001 FEED THRU CAPACITOR	C37,38,39,40, 41,42
6	A-11021	STL	HEAT SINK BORON/NITRIDE	
6	2N2219	MOTOROLA	TRANSISTOR	Q6,7,8 Q12,13,14
3	55120	MAGNETICS	CORE	L6,T5,T9
1	DO-T3		TRANSFORMER	T8
2		SPRAGUE	6.8 µf 35V CAPACITOR, TANTALUM	C30,32
1			3.3 µf 35V	C29
1			47 µf 35V	C28
1			22 µf 35V	C25
4		SPRAGUE	1 µf 35V CAPACITOR, TANTALUM	C24,26,33,35
1			24K RESISTOR ¼W 5%	R51
1			30K	R50
1			15K	R49
1			3.6K	R48
1			10K	R47
1			20K	R46
1			5.1K	R45
1			820Ω	R40
2			300Ω	R37,44
1			47K	R36
1			2.7K	R35
1			470Ω	R34
2			2K	R33,41
1			22K	R32
4			1K	R31,38,42,43
1			180K	R30
2			200Ω RESISTOR ¼W 5%	R29,39

ORIGINATOR	DATE	TITLE	ENGINEERING SKETCH SPACE TECHNOLOGY LABORATORIES, INC. LOS ANGELES, CALIFORNIA
			SK A-11400-6
MJO			SHEET 1 OF 2

STL Form 5238 (Rev. 2-59)

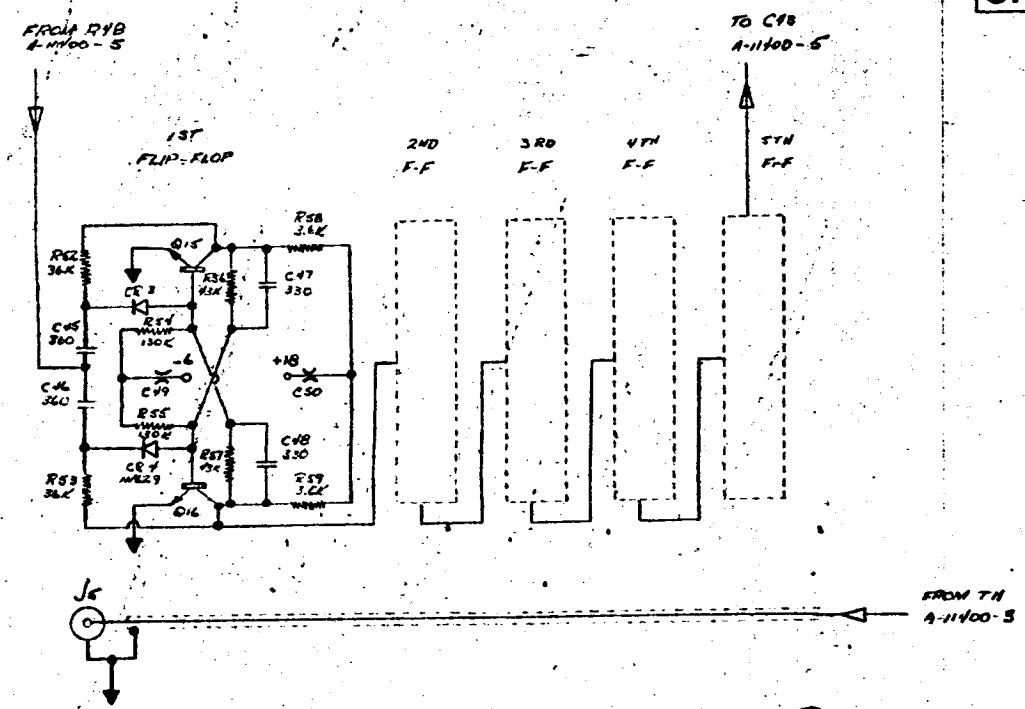

SK

CHG LTR

11			TERMINAL, GROUND	○
35			TERMINAL, INSUL.	◎
10	FA5C-102W	ALLEN BRADLEY	.001 FEED THRU. CAPACITOR	C49, C50
10	A-11021	STL	HEAT SINK BORON/NITRIDE	
10	2N2219	MOTOROLA	TRANSISTOR	Q15 - Q24
1	27-9	AMPHENOL	SUB-MINIAK CONNECTOR	J5
10		CORNING	330pf CAPACITOR	C47, C48
10		CORNING	360pf CAPACITOR	C45, C46
10			3.6K RESISTOR 1/4 W 5%	R58, 59
10			13K	R56, R57
10			130K	R54, R55
10			36K RESISTOR 1/4 W 5%	R52, R53

ORIGINATOR	DATE	TITLE
FRANK FOWLER	25 NOV '63	
MJO		

ENGINEERING SKETCH
SPACE TECHNOLOGY LABORATORIES, INC.
LOS ANGELES, CALIFORNIA

SK A-11400-6

SHEET OF

STL Form 9238 (Rev. 2-59)

SK | CHG LTR

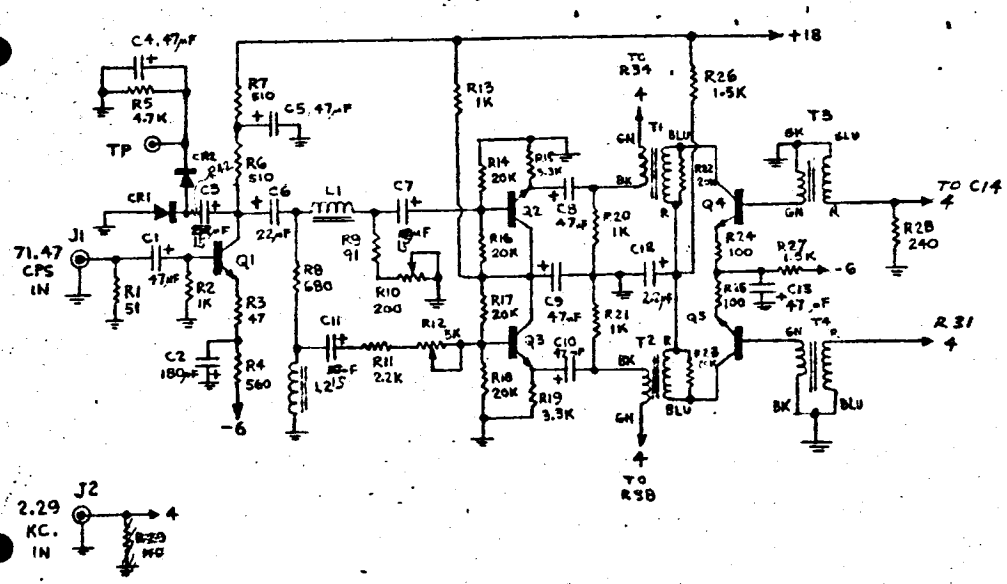

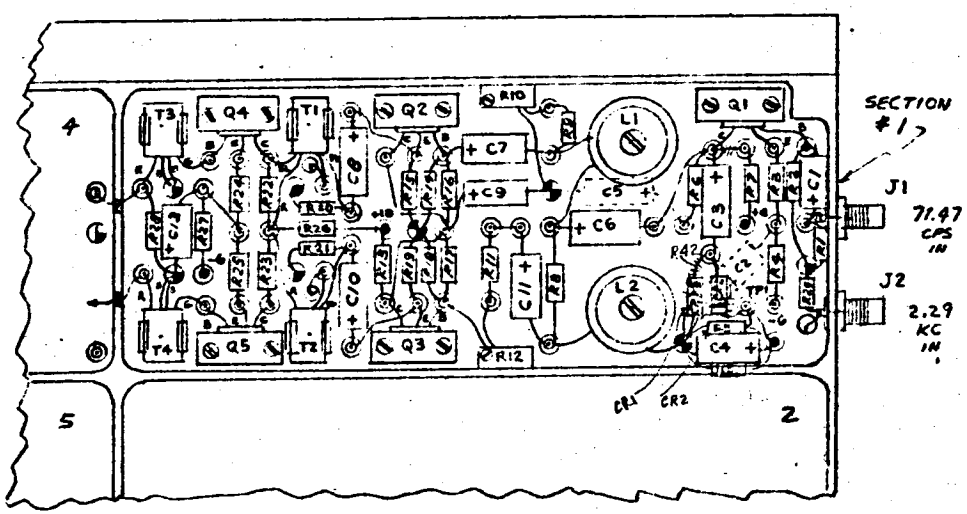

L1 - 3000 TURNS #38 FORMVAR
L2 - 3000 TURNS #38 FORMVAR

NO REQ.	MFR OR STL PART NO.	MFR	DESCRIPTION	SYM
5		MOTOROLA	TRANSISTORS, 2N2219	Q1, Q2 Q3, Q4, Q5
5	A-11021	STL	HEAT SINK, BORON NITRATE	
2		AMPHENOL	CONNECTOR, SUB-MINAX, 27-9	J1, J2
1	TYPE 150D	SPRAGUE	180 MFD. 6V. CAPACITOR, TANTALUM	C2
~~2~~ 3	TYPE 150D	SPRAGUE	~~[illegible]~~ 15 MFD. 35V. CAPACITOR, TANTALUM	C7, C11 C9
~~2~~ 1	TYPE 150D	SPRAGUE	2.2 MFD. 35V. CAPACITOR, TANTALUM	~~C3~~, C12
1	TYPE 150D	SPRAGUE	22 MFD. 35V CAPACITOR, TANTALUM	C6
5	TYPE 150D	SPRAGUE	47 MFD. 35V. CAPACITOR, TANTALUM	C5, C8, C9 C10, C13
2	TYPE 150D	SPRAGUE	47 MFD. 6V. CAPACITOR, TANTALUM	C1, C4
4		UTC	TRANSFORMER, DO-T1	T1, T2 T3, T4
2		MAGNETICS	CORE, TOROID, 55120 W4	L1, L2
1	300-66	DAYSTROM	5K POTENTIOMETER, SQUARE-TRIM	R12
1	300-66	DAYSTROM	200Ω POTENTIOMETER, SQUARE-TRIM	R10
1			~~110Ω RESISTOR 1/4 W~~	~~R29~~
1			240Ω	R28
2			100Ω	R24, R25
2			3.3 K	R15, R19
6			20K	R14, 16, 17, 18, 22, 23
1			2.2 K	R11
1			91Ω	R9
1			680Ω	R8
2			510Ω	R6, R7
1			4.7K	R5
~~1~~ 2			560Ω	R4, R42
1			47Ω	R3
2			1.5K	R26, R27
4			1K	R2, R13 R20 R21
1			51Ω RESISTOR, 1/4 W	R1

ORIGINATOR: P. Guastarolo
DATE: 11-26-63
MJO

TITLE: LOW FREQUENCY MIXER

ENGINEERING SKETCH
SPACE TECHNOLOGY LABORATORIES, INC.
LOS ANGELES, CALIFORNIA

SK A11401-1

SHEET OF

STL Form 523B (Rev. 2-59)

SK | CHG LTR | RESISTOR -(SEC 3 - 150K) (SEC 2: SYS 1 - 500K, SYS 2 - 220K) R8

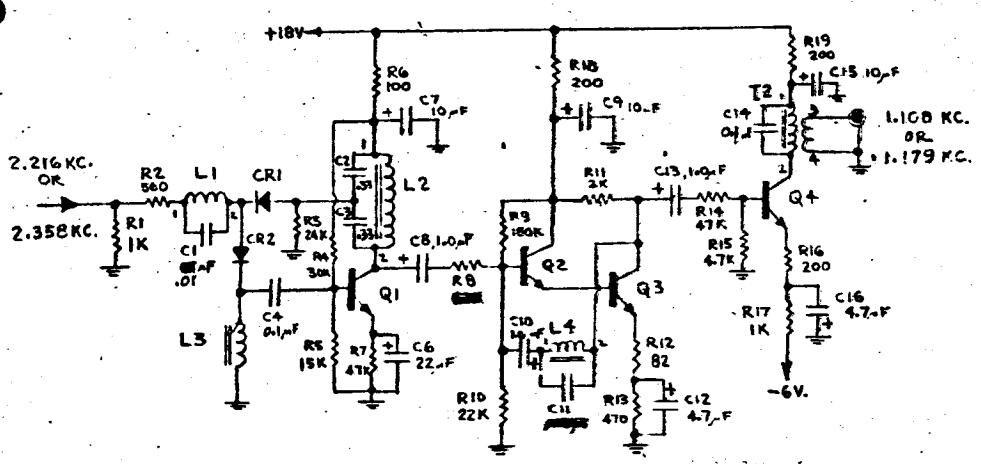

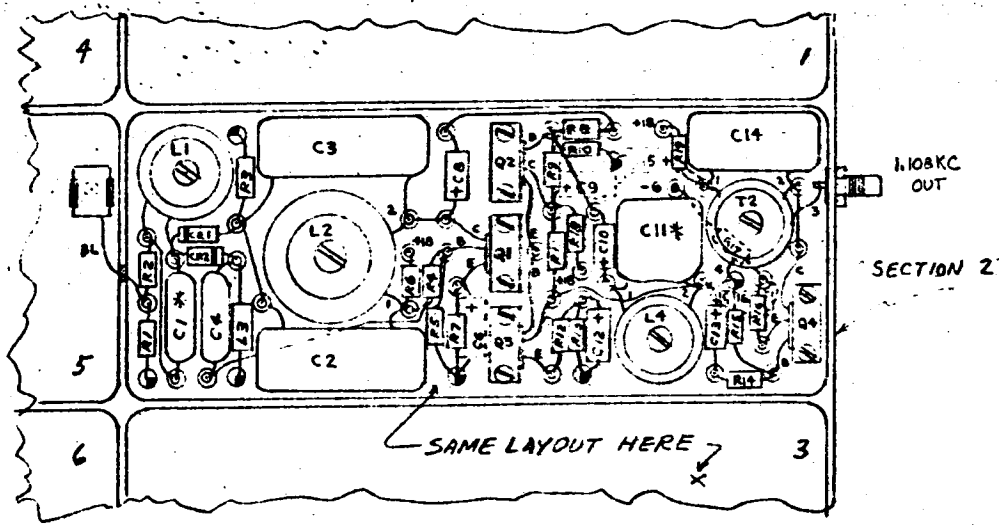

L1 - 1615 TURNS #36 FORMVAR
L2 - 874 TURNS #34 FORMVAR
L4 - 1725 TURNS #36 FORMVAR

T2 - PRI. - 1685 TURNS #36 WIRE
SEC. - 90 " "

NO. REQ	MFR OR STL PART NO.	MFR	DESCRIPTION	SYM
2		AMPHENOL	CONNECTOR, SUB-MINAX, 27-9	
2		ESSEX	WEEDUCTOR, 125 MH	L3
8		MOTOROLA	TRANSISTOR, 2N2219	Q1,2,3,4
4		SYLVANIA	DIODE, 1N99	CR1,CR2
2		MAGNETICS	CORE, TOROID #55930-W4	L2
6		MAGNETICS	CORE, TOROID #55120-W4	L1,L4,T2
4			.008 CAPACITOR, MYLAR	C1
2	SEC 2 .094 SEC 3 .082	EL MENCO	CAPACITOR, MYLAR	C11
PO #6		EL MENCO	0.1 MFD 100V. CAPACITOR, MYLAR	C14
PO 4		EL MENCO	0.33 MFD. 200V. CAPACITOR, MYLAR	C2,C3
2	TYPE 150D	SPRAGUE	22 MFD - 6V., CAPACITOR, TANTALUM	C6
4			4.7 MFD. 35V.	C12,C16
6			10 MFD. 35V.	C7,9,15
6	TYPE 150D	SPRAGUE	1.0 MFD. 35V. CAPACITOR, TANTALUM	C8,10,13
2			180K RESISTOR 1/4 W	R9
2			30K	R4
2			22K	R10
2			24K	R3
2			15K	R5
4			18K (Sys 1, Sec 2 47K)	R14
2			82Ω	R12
2			470Ω	R13
4			4.7K	R7,R15
2			2K	R11
6			200Ω (Sec. 2 - 180Ω - R16)	R16,18,19
2			100Ω	R6
2			560Ω	R2
4			1K, RESISTOR 1/4 W	R1,R17

ORIGINATOR: P. Mattaiolo | DATE: 11-25-63

TITLE: DIVIDE BY 2 & FILTER AMP.
2.216 KC IN - 1.108 KC OUT
2.358 KC IN - 1.179 KC. OUT

MJO

ENGINEERING SKETCH
SPACE TECHNOLOGY LABORATORIES, INC.
LOS ANGELES, CALIFORNIA

SK A11401-2&3

SHEET OF

STL Form 5238 (Rev. 2-59)

SK | CHG LTR

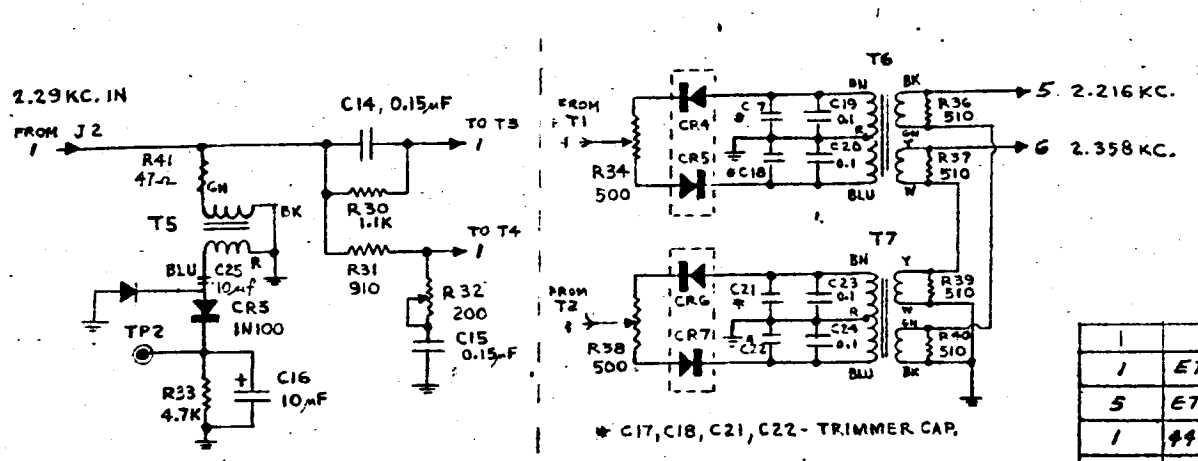

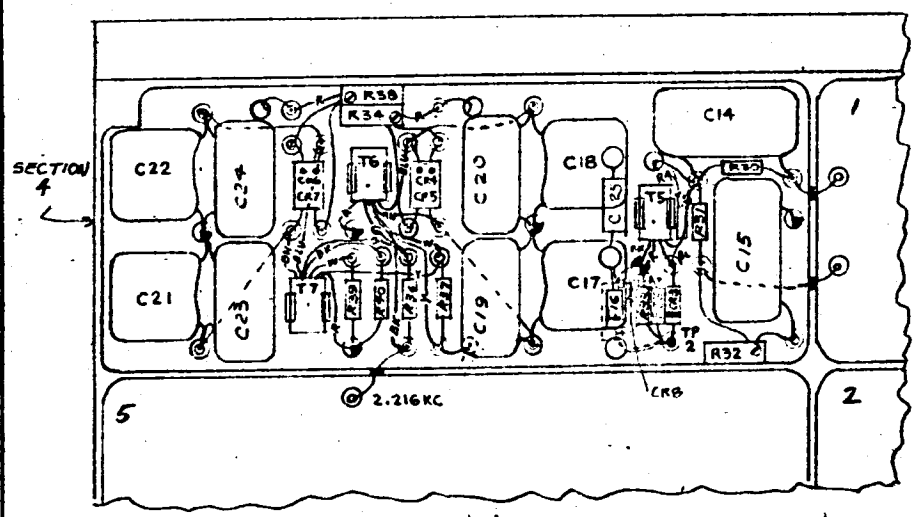

NO REQ.	MFR OR STL PART NO.	MFR	DESCRIPTION	SYM.
1			RESISTOR 47Ω	R41
1	ET2066	STL	TERMINAL, GND., FEED THRU	
5	ET2064	STL	TERMINAL, GND.	
1	4442-B-9	USECO	TERMINAL, INSULATED, FEED THRU	
25	4073-062	LERCO	TERMINAL, INSULATED	
1	CT4183	UTC	TRANSFORMER, DO-T3	T5
2		UTC	TRANSFORMER, DO-T41	T6, T7
2		FAIRCHILD	FA 2000, DIODES, MATCHED PAIR	CR4, CR5 CR6, CR7
4	ED136	HUGHS	1N100, DIODE	CR1, CR2 CR3, CR8
4		ELMENCO	.01-.03 MFD CAPACITOR, SILVERMICA	C17, C18 C21, C22
4		ELMENCO	0.1 MFD. 100V. CAPACITOR, MYLAR	C19, C20 C23, C24
2		ELMENCO	0.15 MFD. 100V. CAPACITOR, MYLAR	C14, C15
32	TYPE 150D	SPRAGUE	10 MFD. 15V. CAPACITOR, TANTALUM	C16, C25
2	300-66	DAYSTROM	500Ω POTENTIOMETER, SQUARE-TRIM	R34, R35
1	300-66	DAYSTROM	200Ω POTENTIOMETER, SQUARE-TRIM	R32
4			510Ω RESISTOR 1/4 W	R36, R37 R39, R40
1			4.7K	R33
1			910Ω	R31
1			1.1K RESISTOR 1/4 W	R30

ORIGINATOR	DATE	TITLE	
P. Guastavolo	11-27-63	LOW FREQUENCY MIXER	ENGINEERING SKETCH SPACE TECHNOLOGY LABORATORIES, INC. LOS ANGELES, CALIFORNIA
MJO			SK A11401-4
			SHEET OF

STL Form 5238 (Rev. 2-59)

SK | CHG LTR

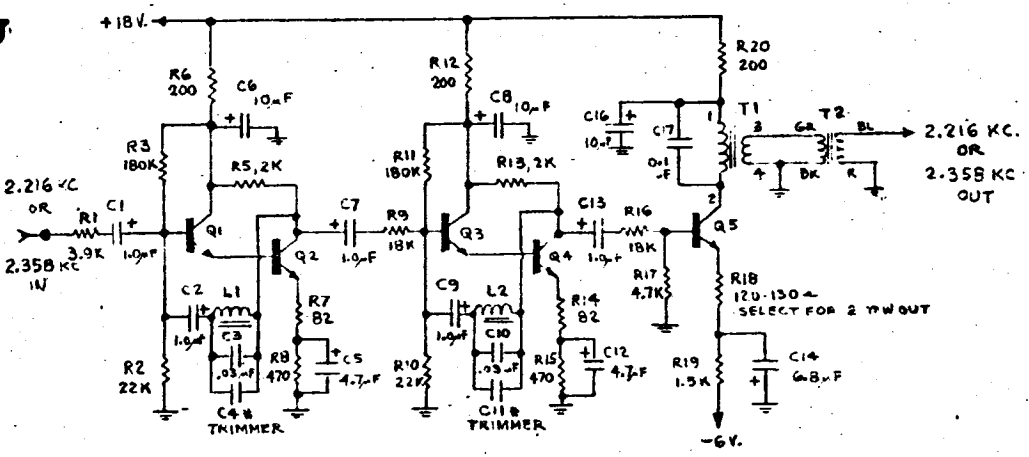

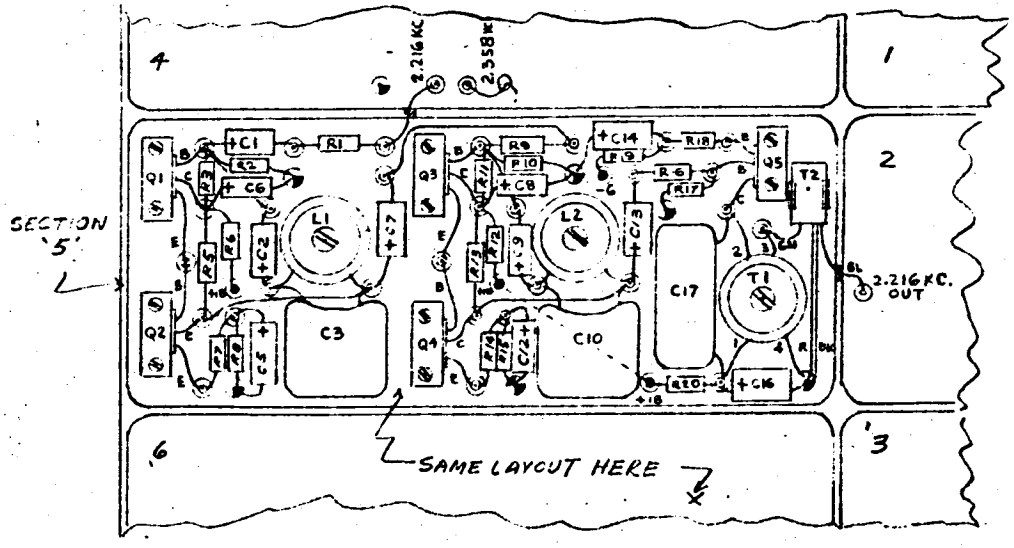

L1 - 1500 TURNS #36 FORMVAR.
L2 - 1500 " " "
T1 - PRI. 870 TURNS #36 FORMVAR
SEC. 185 " " "

NO. REQ.	MFR or STL PART NO.	MFR.	DESCRIPTION	SYM.
10		MOTOROLA	TRANSISTOR, 2N2219	Q1, 2, 3, 4, 5
12	ET 2064	STL	TERMINAL, GND.	
10	A-11021	STL	HEAT SINK, BORON NITRATE	
8	4442-B9	USECO	TERMINAL, INSULATED, FEED THRU	
58	4073-062	LERCO	TERMINAL, INSULATED, STANDOFF	
2	CT4183	U.T.C	TRANSFORMER, DO-T3	T2
6		MAGNETICS	CORE, TOROID # 55120-W4	L1, L2, T1
2		EL MENCO	0.1 MFD. 100V. CAPACITOR, MYLAR	C17
4		EL MENCO	.001-.002 MFD., CAPACITOR, SILVER MICA	C4, C11
4		EL MENCO	.03 MFD. 300V. CAPACITOR, MYLAR	C3, C10
6	TYPE 150D	SPRAGUE	10 MFD. 35V. CAPACITOR, TANTALUM	C6, 8, 16
2			6.8 MFD. 35V.	C14
4			4.7 MFD 35V.	C5, C12
10	TYPE 150D	SPRAGUE	1.0 MFD. 35V. CAPACITOR, TANTALUM	C1, 2, 7, 9, 13
6			200Ω RESISTOR 1/4 W	R6, 12, 20
2			120Ω	R18
2			1.5K	R19
2			4.7K	R17
4			18K	R9, R16
4			470Ω	R8, R15
4			82Ω	R7, R14
4			2K	R5, R13
4			180K	R3, R11
4			22K	R2, R10
2			3.9K RESISTOR 1/4W	R1

ORIGINATOR: P. Guastavino | DATE: 11-25-63

TITLE: FILTER AMP. 2.216 KC & 2.318 KC.

MJO

ENGINEERING SKETCH
SPACE TECHNOLOGY LABORATORIES, INC.
LOS ANGELES, CALIFORNIA

SK A11401-5&6

SHEET OF

STL Form 5238 (Rev. 2-59)

SK | CHG LTR

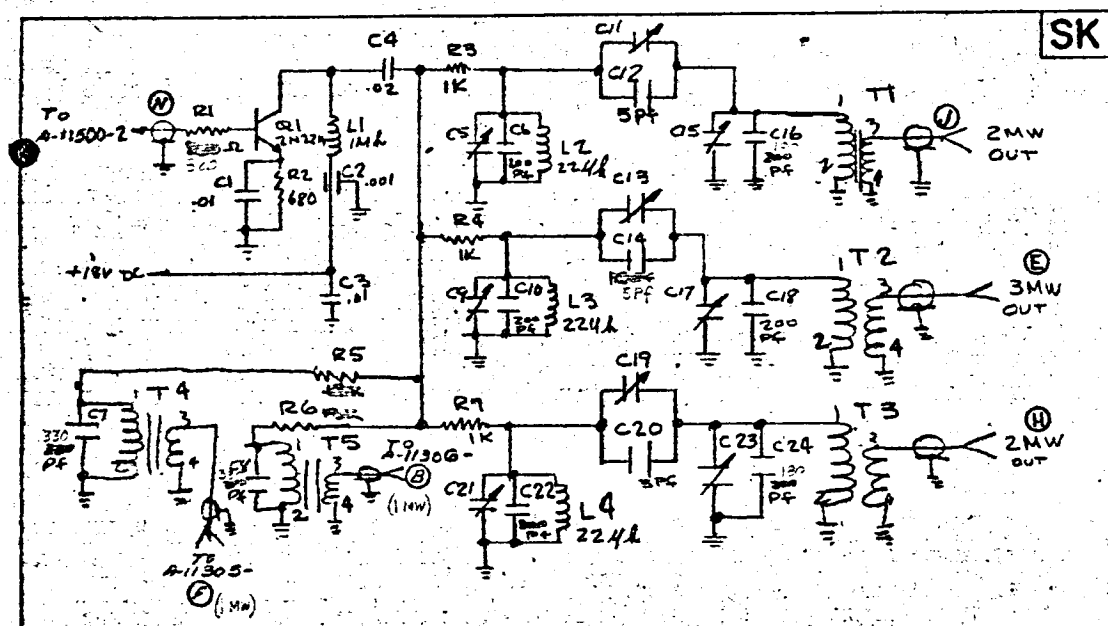

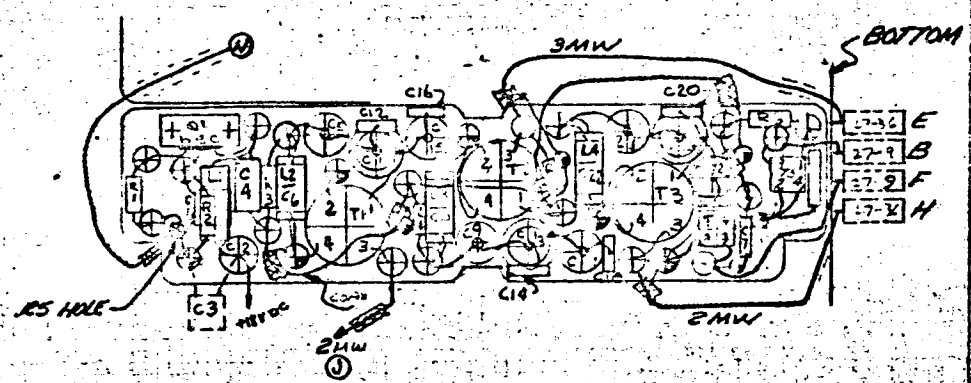

T1 PRIM-60T #30 (360°)
SEC-9T #26

T2 PRIM
SEC

T3 PRIM
SEC

SAME

T4 PRIM - 70T #36 (ONE LAYER OVER FULL LENGTH OF FORM)
SEC - 4½T #34 (WOUND AT BOTTOM END OF FORM)

T5 PRIM
SEC

SAME

NO. REQD	MFG OR STL PART NO.	MFG	DESCRIPTION	REF DESIG
1			CAPACITOR 180 Pf -① 150 -②	C16
18	4073-062	LERCO	TERMINAL INSULATED	⊕
11	ET2064	STL	TERMINAL GRD	⊕
1	ET2066	STL	TERMINAL FEED THRU GRD	⊕
2	A-11023	STL	INSULATOR CAPACITOR	
1	A-11022	STL	TRANSISTOR HEATSINK	Q1
2	24-001	MICRO METALS	CORE	T4&T5
2	A-11021	STL	COIL FORM	T4&T5
3	T50-2	MICRO METALS	COIL FORM	T1,T2 &T3
3		ACDC	CHOKE RF 22μh	L2,L3&L4
1		ACDC	CHOKE RF 1Mh	L1
1			CAPACITOR 200 Pf -① 150 Pf ②	C22
1	2N2219	T.I.	TRANSISTOR	Q1
2	CYFM10C18.J	CORNING	180 Pf CAPACITOR	C16,C24
~~1~~	~~CYFM10C102J~~	~~CORNING~~	~~CAPACITOR 10 Pf~~	C12
2	CYFM10C050J	CORNING	5 Pf	C14&C20
31	CYFM10C201J	CORNING	200 Pf	C6-C8,C10 C11,C12,C20
3	JMC2950	JOHNSON	.8-10 Pf	C11,C13 &C19
6	MC603	JFD	1-28 Pf	C8,C15,C9, C17,C21&C23
1	MC801802K	AEROVOX	.02 μf	C4
1	FA5C-102W	ALLEN BRADLEY	.001 μf FEED THRU	C2
2	VK306CW103K	VITRAMON	CAPACITOR .01 μf	C1&C3
2	CYFM10C331K	CORNING	330 Pf	C7,C8
2			RESISTOR ~~[illegible]~~ ¼W ± 5%	R5&R6
3			1K ¼W ± 5%	R3,R4 &R7
1			680Ω ¼W ± 5%	R2
1			RESISTOR ~~[illegible]~~ Ω ¼W ± 5% 820Ω	R1

ORIGINATOR: [illegible] | DATE: 10/24/63

TITLE: 2.342 MHz POWER DIVIDER

ENGINEERING SKETCH
SPACE TECHNOLOGY LABORATORIES, INC.
LOS ANGELES, CALIFORNIA

SK A-11500-1

SHEET OF

MJO 4126-01-01

16 hrs

STL Form 5238 (Rev. 2-59)

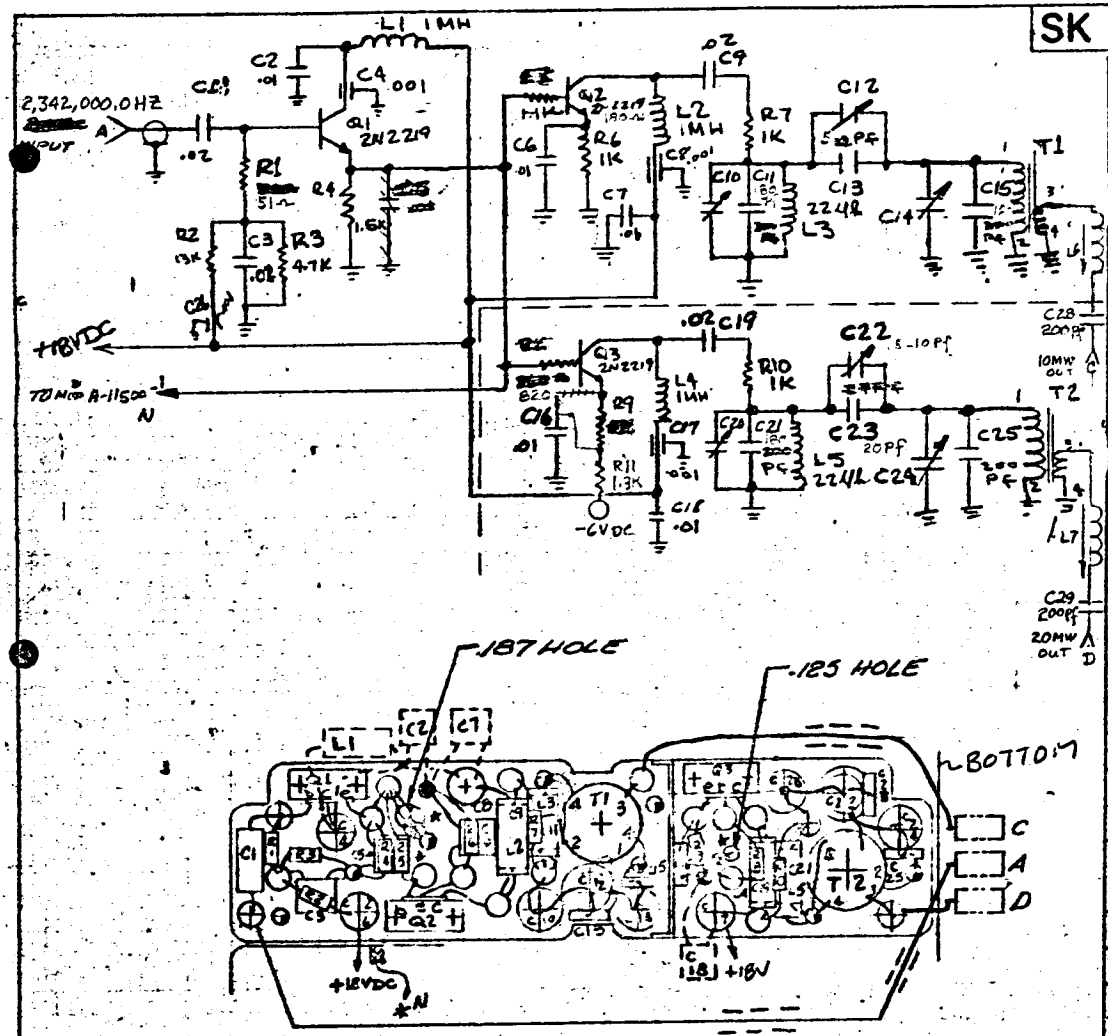

T1 PRIM = 60T #30 - 360°
SEC = 9T #26 — "

T2 PRIM = 60T #30 — 360°
SEC = 9T #26 — "

SK

CHG LTR 2

NO. REQD	MFG OR STL PART NO.	MFG	DISCRIPTION	REF DESIG.
			#4311 MILLER CHOKE	L6, L7
2	ET2066	STL	GRD TERMINALS FEED THRU	
8	1280B/ET2064	USECO/STL	GRD TERMINALS STD OFF	
17	4073-062	LERCO	TERMINALS INSULATED	
2	T50-2	MICRO METALS	COIL FORM	
2	A-11023	STL	INSULATOR, CAPACITOR	C12&C22
3	A-11022	STL	HEAT SINK, TRANSISTOR	
3	2N2219	T.I.	TRANSISTOR	Q1,Q2&Q3
1			RESISTOR 1.3K	R11
2		ACDC	22 μh CHOKE	L3&L5
3		ACDC	1 Mh CHOKE	L1,L2&L4
1	CYFM10C161J	CORNING	CAPACITOR 160 PF	C15
1	CYFM10C270J	CORNING	CAPACITOR 27 PF	C23
1	CYFM10C180J	CORNING	18 PF	C13
4	CYFM10C201J	CORNING	200 PF C29 C28	C21&C25
2	JMC2950	JOHNSON	.8-10 PF	C12&C22
4	MC603	JFD	1-28 PF	C10, C14, C20&C24
4	FASC-102W	ALLEN BRADLEY	.001 BY-PASS	C4, C9, C17 & C26
7	VK306CW103K	VITRAMON	.01 μf	C2, C3, C6, C7, C16 & C18
5	MCB0N203K	AEROVOX	CAPACITOR .02 μf	C1, C9 & C19
1			CAPACITOR 180 PF	C11
1			RESISTOR 130-① 120-②	R9
1			820Ω	R8
3			1K	R6, R7 & R10
1			1.1K	R5
1			1.5K	R4
1			4.7K	R3
1			13K	R2
1			RESISTOR 50Ω Ω ¼W ±5%	R1

ORIGINATOR D.E. Anderson

DATE

TITLE 2.342 MHZ POWER DIVIDER

ENGINEERING SKETCH
SPACE TECHNOLOGY LABORATORIES, INC.
LOS ANGELES, CALIFORNIA

SK A-11500-2

SHEET OF

MJO 4126-01-02

STL Form 8238 (Rev. 2-53)

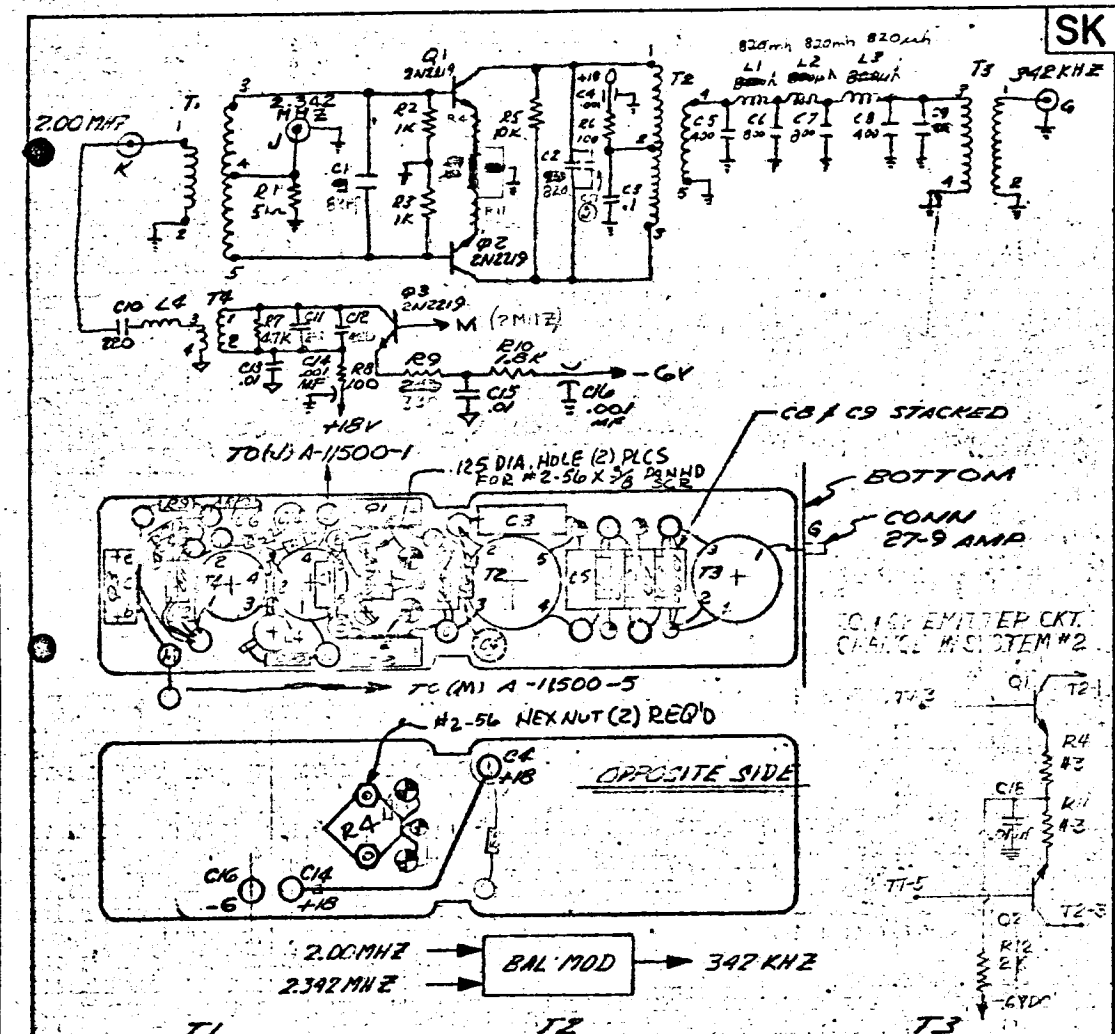

T1
PRIM 20T #30 GAGE
SEC 50T BIFILAR 100T
TOTAL #30 GAGE

T2
PRIM 10T BIFILAR 20T
TOTAL #30 GAGE
SEC 90T #30 GAGE

T3
PRIM. 20T #30 GAGE
SEC. 30T #30 GAGE

T4
PRIM 40 TURNS } 24 GAGE
SEC 6 TURNS } 7.4 μH / 36 TURNS

NO. REQ'D	MFR or STL PART NO.	MFR	DESCRIPTION	SYM
			2K Ω RESISTOR 1/4 W. 5%	R12
2	VR30CW103K	VITRAMON	.01 μf CAPACITOR	C13, C15
1	CYFM15C621J	CORNING	620 PF ±10 500 V CAPACITOR	C12
1			1.8K RESISTOR	R10
1			330 RESISTOR	R9
2			TERMINAL, INSUL FEED THRU	
16			TERMINAL INSUL	
1			TERMINAL GND FEED THRU	
6	12B08B/E120A	STL	TERMINAL GND	
1			50 PF ±2 ONLY CAPACITOR	C17
2	A-11022	STL	HEAT SINK	
3	2N2219	MOTOROLA	TRANSISTOR	Q1, 2, 3
2	T68-2	MICRO METALS	TRANSFORMER	T2 & T3
2	T50-2	MICRO METALS	TRANSFORMER	T1, T4
1	4311	MILLER	CHOKE	L4
3	WEE	ESSEX	μh 820 CHOKE	L1, L2 & L3
1	CYFM10C221J	CORNING	220 CAPACITOR	C10
2	CYFM15C811J	CORNING	800 PF CAPACITOR	C6 & C7
2	CYFM15C411J	CORNING	400 PF "	C5 & C8
3	FA5C-102W	ALLEN BRADLEY	.001 μf " FEED THRU	C4, 14, 16
1	MC20W104AK	AEROVOX	.1 μf "	C3
2	CYFM15C821J	CORNING	820 PF " (C9 - 910 PF ±2)	C2 & C9
2	CYFM10C820J	CORNING	82 PF ±10 " C1 - 91 ±2 PF / C11 - 3 ONLY	C1, C11
1			4.7K RESISTOR	R7
2			100 Ω RESISTOR 1/4 W. 5%	R6, R8
1			10K "	R5
2	300PE5W100	DAVISTON PACIFIC	56 Ω ±10 "	R4, R11
2			1K "	R2 & R3
1			51 Ω "	R1

ORIGINATOR	DATE	TITLE	ENGINEERING SKETCH
L. HARRIS	10-22-63	MIXER 342 KHZ	SPACE TECHNOLOGY LABORATORIES, INC. LOS ANGELES, CALIFORNIA
L.O.	10-23-63		SK A-11500-3
MJO 4126-01-01			SHEET OF

7.5 LBS

STL Form 523B (Rev. 2-59)

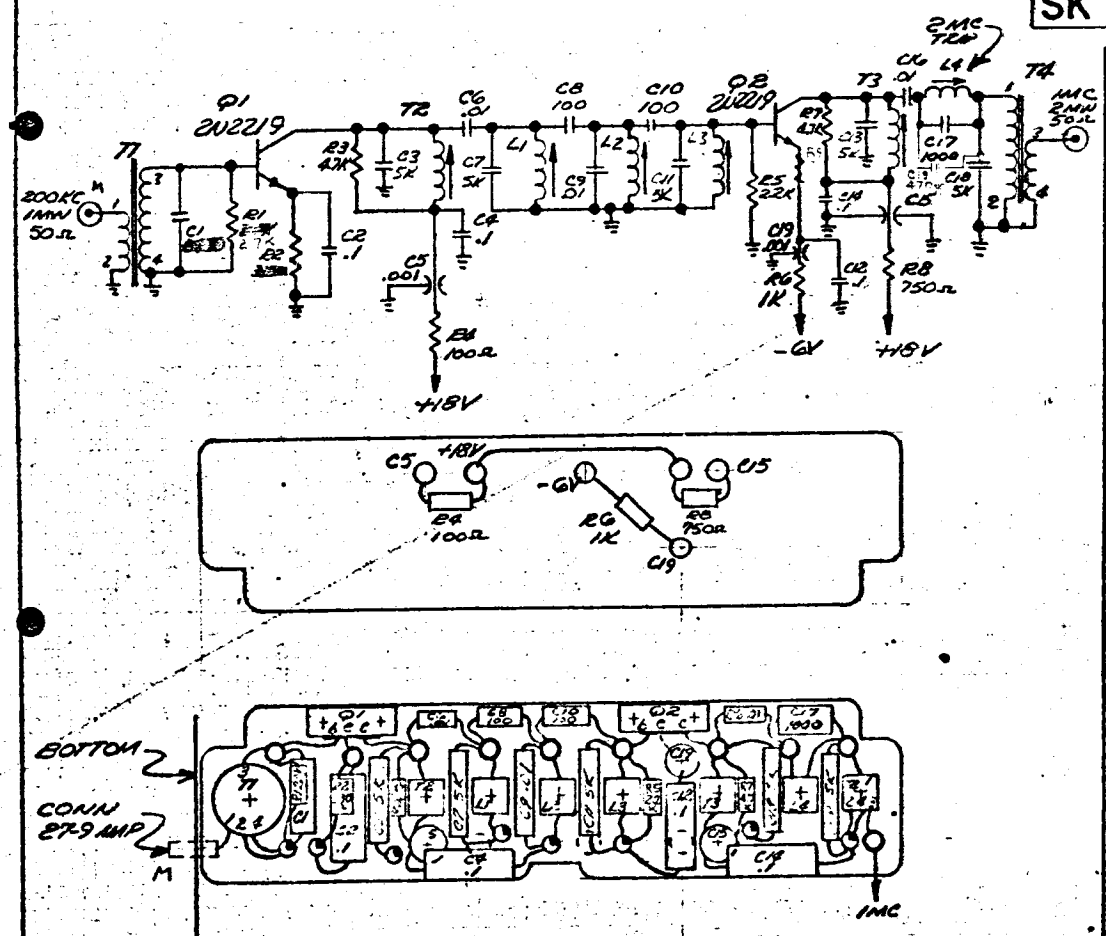

T1 - PRI - 60 TURNS #32 FORMVAR (250 μH)
SEC - 8 " " "

T2, T3 - 43 TURNS #32 FORMVAR (5 μH)

T4 - PRI 43 TURNS #32 FORMVAR (5 μH)
SEC 8 " " "

L1, L3, L4 - 43 TURNS #32 (5 μH)

L2 - 24 TURNS #28 FORMVAR (2.7 μH)

SK | CHG LTR

NO REQD	MFR OR STL PART NO	MFR	DESCRIPTION	SYM
8	ET2064	STL	TERMINAL GRD	◐
10	4073-062	LERCO	TERMINAL INSUL	○
1	CYFM15C471J		470 PF CAPACITOR	C19
2	A-11022	STL	HEAT SINK TO5	
2	2N2219	MOTORLA	TRANSISTOR	Q1, Q2
1	CF108	GENERAL CERAMICS	CORE, TRANSFORMER	T1
7	A-11021	STL	COIL FORM	T2, T3, T4, L1, L2, L3, L4
1			75 Ω - ① RESISTOR 56 Ω - ②	R9
1	CYFM15C102J	CORNING	1000 CAPACITOR	C17
2	VYRC101J	VITRAMON	100	C8, 10
2	VK30CW103K	VITRAMON	.01	C6, 16
3	FA5C-102W	ALLEN BRADLEY	.001 FEED THRU	C5, 15, 19
6	CYFM20C502J	CORNING	5K	C3, 7, 11, 13, 18
4	MCBOY104 AK	AEROVOX	.1	C2, 4, 12, 14
1	CYFM20C242J	CORNING	2400 PF ① CAPACITOR 1800 PF - ②	C1
1	CYFM30C103J	CORNING	.01 "	C9
1			750 RESISTOR	R8
1			4.7K	R7
1			1K	R6
1			2.2K	R5
1			100Ω	R4
1			4.7K	R3
1			680 Ω - ① 330 - ②	R2
1			2.7K RESISTOR	R1

ORIGINATOR: Ponce de Leon
DATE: 11-4-63
TITLE: X 5 MHZ 1MHZ
MJO 4126-01-02

ENGINEERING SKETCH
SPACE TECHNOLOGY LABORATORIES, INC.
LOS ANGELES, CALIFORNIA

SK A-11500-4
SHEET OF

STL Form 5238 (Rev. 2-59)

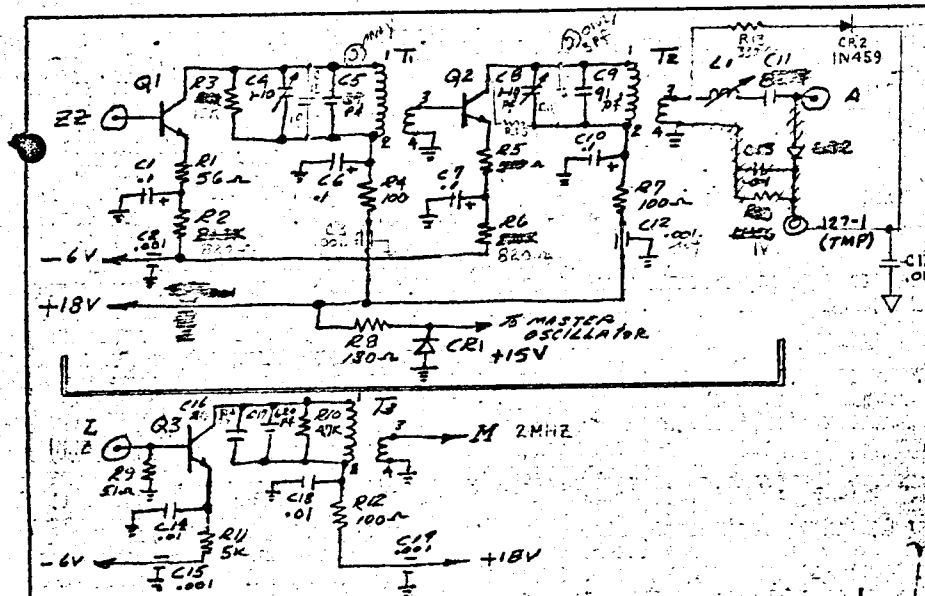

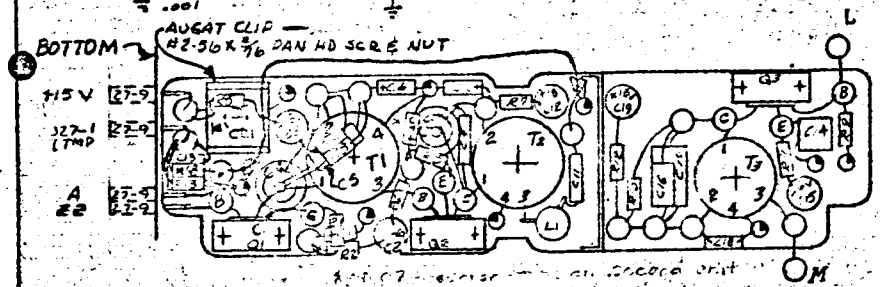

T1		T2		T3	
PRIM 79T	#28GA	PRIM 79T	#28GA	PRIM 40T	#22GA
SEC 25T	#24GA	SEC 9T	#24GA	SEC 5T	#22GA

NO REQ	MFR OR STL PART NO	MFR	DESCRIPTION	SYM
1	6014-10-A	AUGAT	CLIP	
1	1N456		DIODE	CR2

SK

NO. REQD	MFR OR STL PART No.	MFR	DESCRIPTION	SYM
1	1N459	CHG LTR PS	DIODE	CR2
1	T50-2	MICRO METAL	TRANSFORMER	T3
2	T68-2	MICRO METAL	TRANSFORMER	T1 & T2
3	A-11022	STL	HEAT SINK	
22			TERMINAL INSUL	○
9	1280B/ET206A	STL	TERMINAL GND	◐
3	2N2219	MOTOROLA	TRANSISTOR	Q1, Q2 & Q3
1	PS1502	PSI	DIODE	CR1
1	4313	MILLER	CHOKE	L1
1	CYFM15C621J	CORNING	620 PF CAPACITOR	C17
1	[illegible]	CORNING	62 PF - ① " 24 - ②	C16
3	VK30CW103J	VITRAMON	.01μf "	C13 C14 & C18
1	CYFM10C151J	CORNING	82 PF - ① " 75 - ②	C11
1	CYFM10C910J	CORNING	91 PF "	C9
1	CYFM10C390J	CORNING	39 PF 36 - 2 ONLY	C5
2	2950	JOHANSON	1-10 PF " ADJ	C4 & C8
5	FA5C-102W	ALLEN BRADLEY	.001μf " FEED THRU	C2, C3, C12 C13 & C19
4	150D104X5035A2	SPRAGUE	.1μf "	C1, C6, C7 & C10
1			330Ω RESISTOR 1/4W 5%	R13
1			5K RESISTOR 1/4W 5%	R11
1			4.7K "	R10
1			51Ω "	R9
1			130Ω "	R8
1			820Ω "	R6
1			130Ω - ① " 340 - ②	R5
3			100Ω "	R4, R7 & R12
1			10K "	R3
1			820Ω "	R2
1			56Ω "	R1

ORIGINATOR I. HARRIS — DATE 11-6-63

TITLE DRIVER AMP

X2 1MHZ TO 2MHZ

MJO 4126-01-02

ENGINEERING SKETCH
SPACE TECHNOLOGY LABORATORIES, INC.
LOS ANGELES, CALIFORNIA

SK A-11500-5

SHEET OF

13

STL Form 523B (Rev. 2-59)

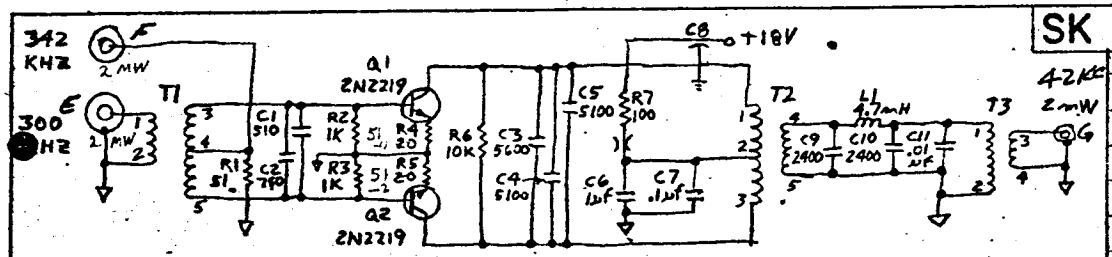

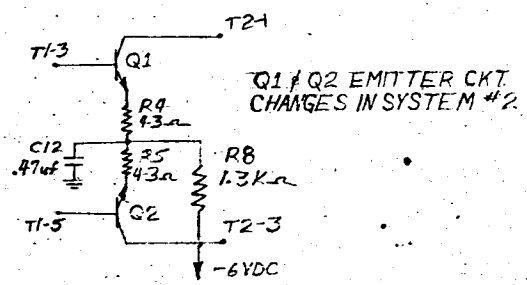

Q1 & Q2 EMITTER CKT CHANGES IN SYSTEM #2

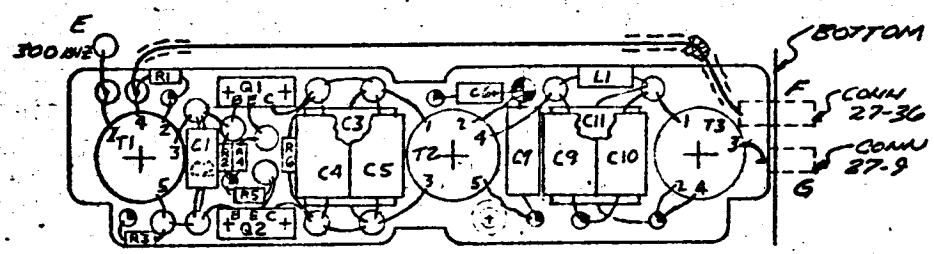

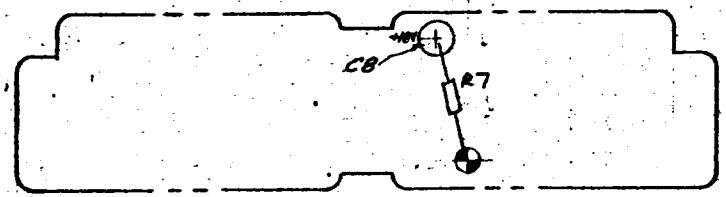

T1
PRI. 33T #30 360°
SEC. 100T BIFILAR #34
~~(200T TOTAL)~~ 360°

T2
PRI. 200T BIFILAR #34 RD & RD
~~(400T TOTAL)~~
SEC. 200T #34 RD & RD

T3
PRI. 500T #34 RD & RD
SEC. 110T #34 360°

SK

NO. REQD	MFR OR STL PART NO.	MFR	DESCRIPTION	SYM
1	4442-B-9.	USECO	TERMINAL, INSUL. F/T	
13	4073-062	LERCO	TERMINAL, INSUL. ST/OFF	
6	ET2064	STL	TERMINAL, GRD	
3	T68-2	MICRO/METALS	TRANSFORMER	T1,2,3
2	A-11022	STL	HEAT SINK	
1	SWD-4700	ESSEX-SUPER WEB-DUSTOR	4.7 mH INDUCTOR	L1
2	2N2219	MOTOROLA	TRANSISTOR	Q1,2
1	150D474X0020A2	SPRAGUE	.47uf CAPACITOR	C12
1	CYFM30C103J	CORNING	.01 uf CAPACITOR	C11
2	CYFM20C242J	CORNING	2400 pf	C9,10
1	SS5A-102W	ALLEN/BRADLEY	1000 pf CAPACITOR, ST/OFF	C8
1	150D104X0020A2	SPRAGUE	.1uf	C7
1	150D105X0020A2	SPRAGUE	1 uf	C6
2	CYFM20C512J	CORNING	5100 pf	C4,5
1	CYFM30C562J	CORNING	5600 pf	C3
1	CYFM15C751J	CORNING	750 pf	C2
1	CYFM15C511J	CORNING	510 pf CAPACITOR	C1
1			1.3 KΩ RESISTOR	R8
1			100 Ω RESISTOR	R7
1			10K	R6
2			~~20Ω~~ 51 Ω 43Ω SYS #2	R4,5
2			1K	R2,3
1			51Ω RESISTOR	R1

ORIGINATOR	DATE	TITLE	ENGINEERING SKETCH
L.L. FREED	10-30-3	MIXER 42 KHZ	SPACE TECHNOLOGY LABORATORIES, INC. LOS ANGELES, CALIFORNIA
OK			SK A-11501-1
MJO			SHEET OF

STL Form 523B (Rev. 2 59)

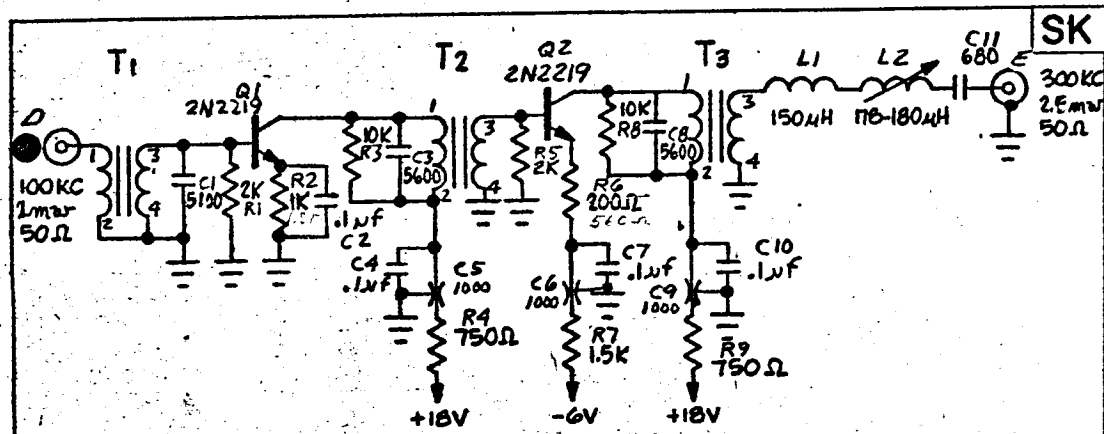

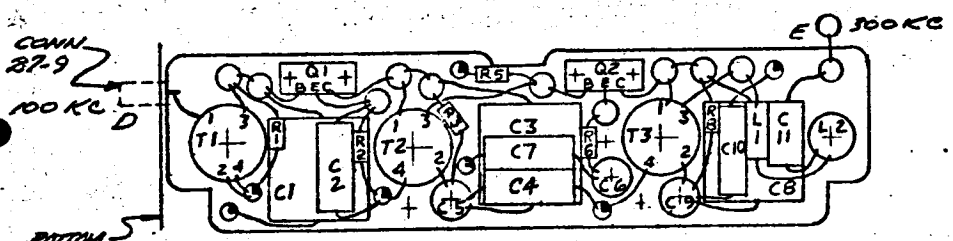

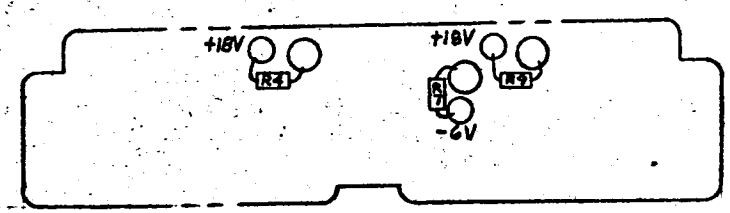

T1	T2	T3
PRI. 165T #32	PRI. 50T #30	PRI. 50T #30
SEC. 35T #32	SEC. 15T #30	SEC. 7T #30

SK A-11501-2 | CHG LTR | LEN 4 HRS

NO. REQD	PART NO.	MFR	DESCRIPTION	SYMBOL
2	A-11022	STL	HEAT SINK, BORON NITRATE	
11	4073-062	LERCO	TERMINAL, INSUL	
7	ET 2064	STL	TERMINAL, GRD	
1			1.5K RESISTOR	R7
1			~~200Ω~~ 560Ω	R6
2			750Ω	R4, R9
2			10K	R3, R8
1			~~1K~~ 1.5K	R2
2			2K RESISTOR	R1, R5
3	5A5C-102W	ALLEN/BRADLEY	1000 PF CAPACITOR, F/T	C5, C6, C9
1	VY16C681J	VITRAMON	680 PF CAPACITOR	C11
1	VY31C512J	~~VITRAMON~~	5100 PF	C1
2	VY31C562J	~~VITRAMON~~	5600 PF	C3, C8
4	MC80V104AK	AEROVOX	.1uf CAPACITOR	C2, 4, 7, 10
2	2N2219	MOTOROLA	TRANSISTOR	Q1, Q2
3	T50-3	MICROMETALS	TOROID FORM	T1, T2, T3
1	4315	MILLER	178-180 INDUCTOR, VARIABLE	L2
1	SWD-150	ESSEX	150μH INDUCTOR SUPER WEE-DUCTOR	L1

ORIGINATOR: L. L. FREED | DATE: 11-4-63 | TITLE: X3 MUL 300 KHZ

MJO

ENGINEERING SKETCH
SPACE TECHNOLOGY LABORATORIES, INC.
LOS ANGELES, CALIFORNIA

SK A-11501-2

SHEET OF

STL Form 5238 (Rev. 2 59)

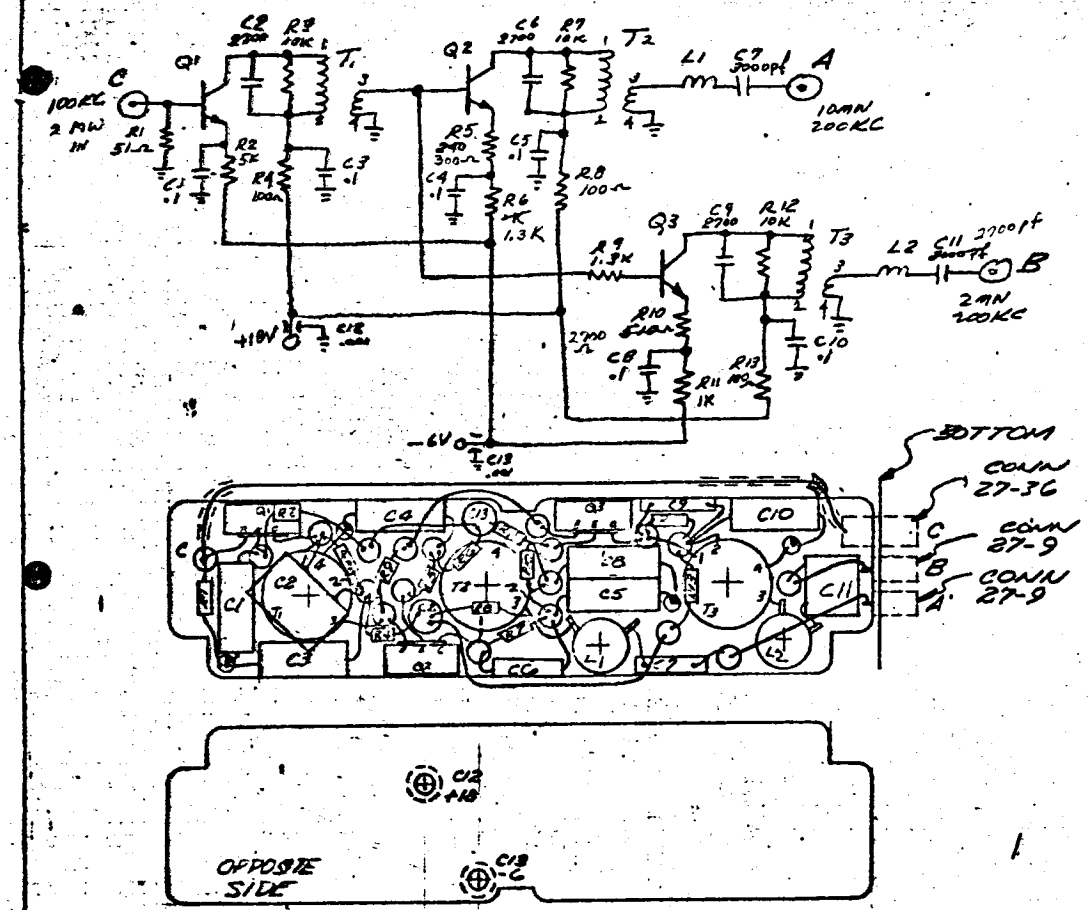

T1	T2	T3
PRIM 200T 30GA	PRIM 200T 30GA	PRIM 200T 30GA
SEC 20T 30GA	SEC 20T 30GA	SEC 20T 30GA

SK | CHG LTR

NO. REQD	MFR OR STL PART NO.	MFR	DESCRIPTION	SYM
1			1.3K RESISTOR 1.1K SYS #2	R6
17	4073-062	CERCO	TERMINAL INSUL	○
8	12BOB/ET2064	STL	TERMINAL GNG	◐
3	T68-2	MICRO METALS	TRANSFORMER	T1, T2 & T3
3	A-11022	STL	HEATSINK	
3	2N2219	MOTOROLA	TRANSISTOR	Q1, Q2 & Q3
2	4315	MILLER	CHOCK ADJ.	L1, L2
			2700 pf	C11
2	HRDM-19-302J	ELMENCO	3000 pf CAPACITOR	C7 & C11
3	HRDM-19-272J	ELMENCO	2700 pf "	C2, C6 & C9
6	MC80V105AK	AEROVOX CERAFIL	.1µf "	C1, C3, C4, C5, C8 & C10
2	FA5C-102W	ALLEN BRADLEY	.001 " FEED THRU	C12, C13
1			~~510Ω~~ 2.7K RESISTOR 1/4 W 5%	R10
1			1.3K " "	R9
2			1K " "	R6 & R11
1			~~240Ω~~ 300Ω " 270Ω SYS #2	R5
2			100Ω " "	R4 & R8 R13
3			10K " "	R3, R7 & R12
1			~~5K~~ 5.1K " "	R2
1			51Ω " "	R1

ORIGINATOR	DATE	TITLE	
I. HARRIS	11-4-63	X2 MULTIPLIER	ENGINEERING SKETCH SPACE TECHNOLOGY LABORATORIES, INC. LOS ANGELES, CALIFORNIA
	11-13-63		SK A-11501-3
MJO 4126-01-01			SHEET OF

STL Form 523B (Rev. 2-59)

SK | CHG LTR

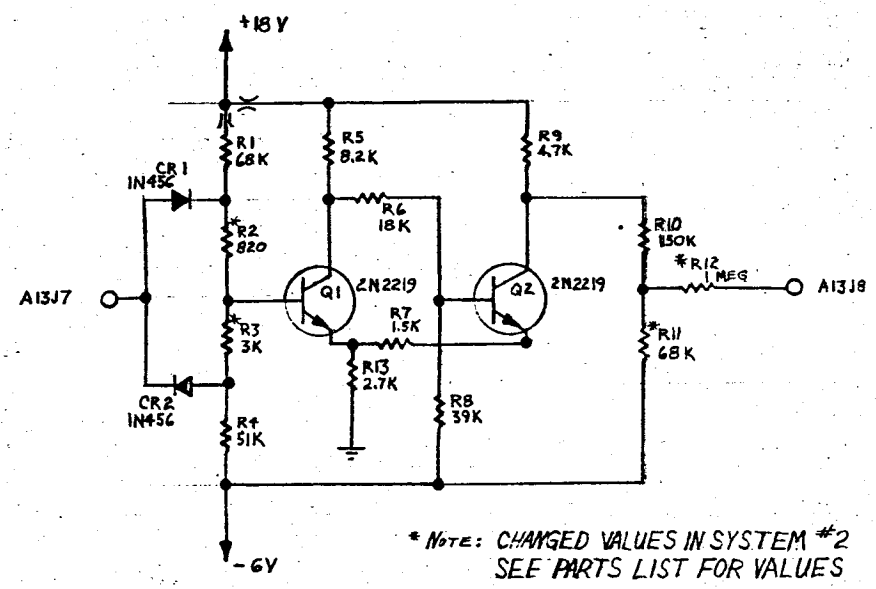

* NOTE: CHANGED VALUES IN SYSTEM #2
SEE PARTS LIST FOR VALUES

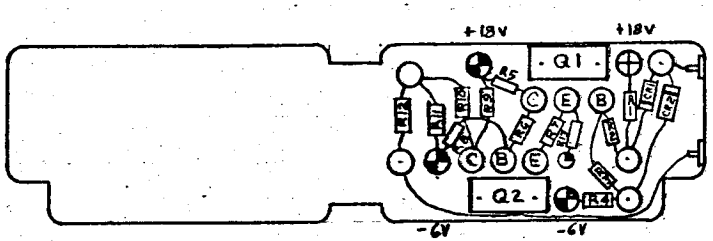

NO REQ'D	MFG OR STL PART NO	MFR	DESCRIPTION	SYM
4	4442-B-9	USECO	TERMINAL, INSUL F/T	
11	4073-062	LERCO	TERMINAL, INSUL ST/OFF	
1	ETZ-064	STL	TERMINAL, GRND	
2	A11022	STL	HEAT SINK	
2	1N456	HUGHES	DIODE	CR1, CR2
2	2N2219	MOTOROLA	TRANSISTOR	Q1, Q2
1			2.7K RESISTOR 1/4W ±5%	R13
1			1 MEG	R12
1			150K	R10
1			4.7K	R9
1			39K	R8
1			1.5K	R7
1			18K	R6
1			8.2K	R5
1			51K	R4
1			3K 8.2K IN SYS #2	R3
1			820Ω 2K IN SYS #2	R2
2			68K RESISTOR 1/4W ±5%	R1, R11

ORIGINATOR	DATE	TITLE	ENGINEERING SKETCH
DRAWN BY V.F. STEWART	2-4-64	SWEEP CIRCUIT	SPACE TECHNOLOGY LABORATORIES, INC. LOS ANGELES, CALIFORNIA
MJO			SK A11501-4
			SHEET OF

STL Form 523B (Rev. 2-59)

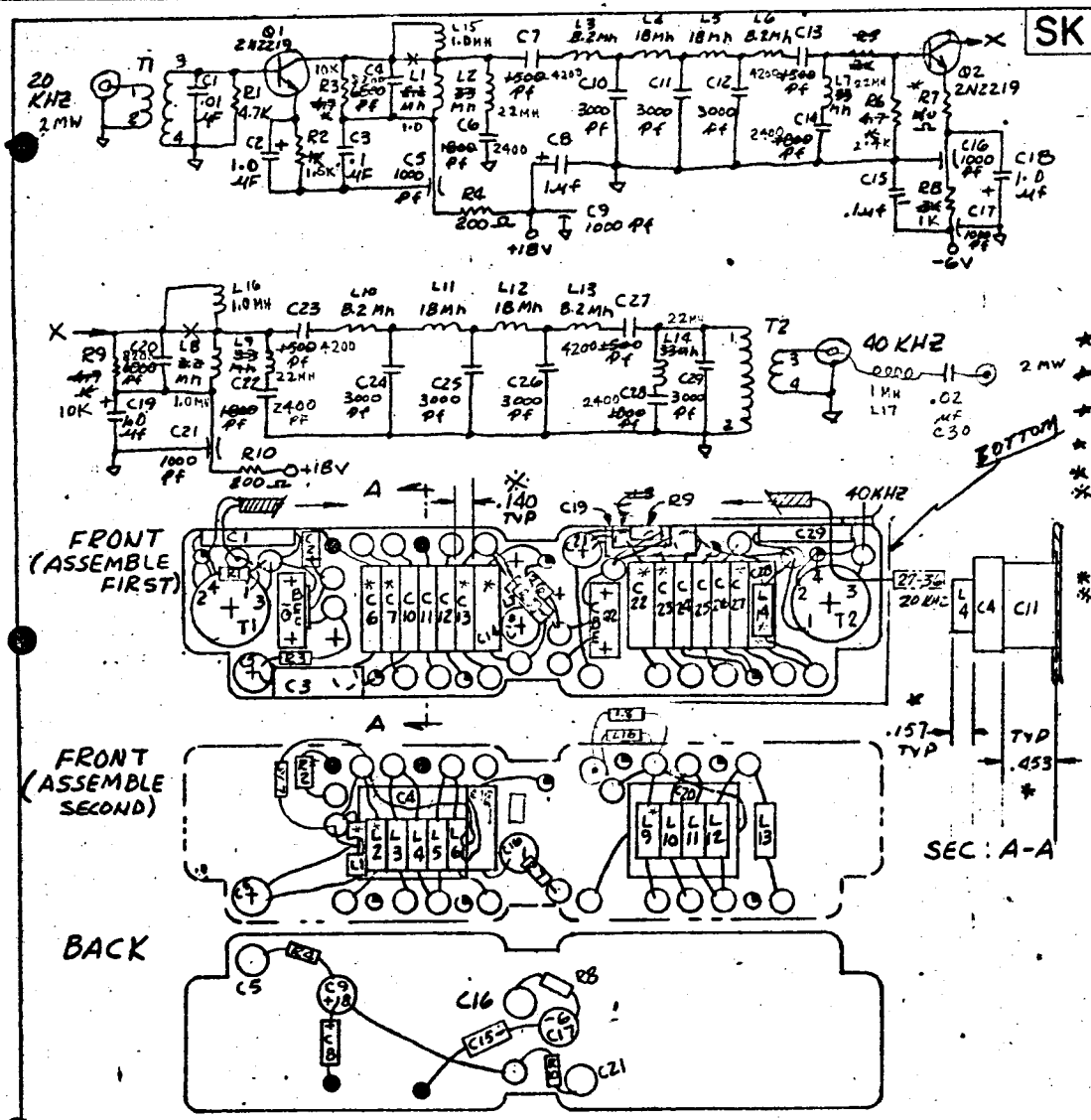

NO REQ	MFR OR STL PART NO	MFR	DESCRIPTION	SYM
1			.022 CAPACITOR MYLAR	C30
1		NYT	1.0 MH INDUCTOR	L17
27	4073-062	LERCO	TERMINAL INSUL ST/OFF	○
2	ET2066	STL	TERMINAL GRD F/T	●
8	ET2064	STL	TERMINAL GRD ST/OFF	◐
2	0-3	GENERAL CERAMIC	TRANSFORMER	T1,T2
2			HEATSINK (TO-5)	
2	2N2219	MOTOROLA	TRANSISTOR	Q1,Q2
★ 4	SWD-18000	NYTRONICS SUPER	18 mh INDUCTOR	L4,L5 L11,L12
★ 4	SWD-8200		8.2 mh	L3,6, 10,13
★ 4	SWD-~~33000~~ 22000		~~33~~ 22 mh	L2,7, 9,14
★ ~~2~~4	SWD-~~7200~~	NYTRONICS SUPER	~~22 mh~~ 1.0MH INDUCTOR	L1,8 L15,L16
★ ※ 7	CY20C302J	CORNING	3000 pf CAPACITOR	C10,11,12 24,25,26,29
2	SS5A-102W	ALLEN BRADLEY	1000 pf ST/OFF	C9,17
~~1~~3	150D105X0020A2	SPRAGUE	1 µf	C8,C19,C2
★ ※ 4	CY20C~~152~~ 422 J	CORNING	~~1500 pf~~ 4200 pf	C7,13,23, 27
4	VY21C~~182~~ J	VITRAMON	~~1200~~ pf 2400 pf	C6,14, 22,28
3	FA5C-102W	ALLEN BRADLEY	1000 pf F/T	C5,16,21
2	VY32C682J	~~VITRAMON~~	~~6800 pf~~ 8200 pf	C4,20
~~3~~2	MC80V104AK	AEROVOX	.1 µf	C3,18,19
~~2~~1	150D104X5035A2	SPRAGUE	.1 µf	~~C2~~ & C15
1	CYFM30C103J	CORNING	.01 µf CAPACITOR	C1
2			10K 1/4 W RESISTOR	R3,R9
1			~~3K~~ 1K 1/4 W RESISTOR	R8
1			100 Ω -① 200 Ω -②	R7
1			~~2K~~ 2.4K	~~R5~~ R6
2			200 Ω	R4,R10
1			~~1K~~ 1.5K	R2
~~4~~1			4.7K 1/4 W RESISTOR	R1, ~~R3~~ ~~R6~~, R9

SKA-11502-1 CHG LTR

T1
PRI 9.5T #32
SEC 70T #32
SEC. RESONATES TO 20KC WITH 6800 pf

T2
PRI 70T #32
SEC 8.5T #32
SEC. RESONATES TO 40KC WITH 3000 pf

NOTE: PARTS MARKED THUS ★, ★, & ※ SHALL NOT EXCEED DIM SHOWN

ORIGINATOR	DATE	TITLE	
House	11-5-63	X 2 MUL. 40 KHZ	ENGINEERING SKETCH SPACE TECHNOLOGY LABORATORIES, INC. LOS ANGELES, CALIFORNIA
NJ OK			SKA-11502-1
MJO			SHEET OF

STL Form 523B (Rev. 2-59)

LEN 19 HRS

SK

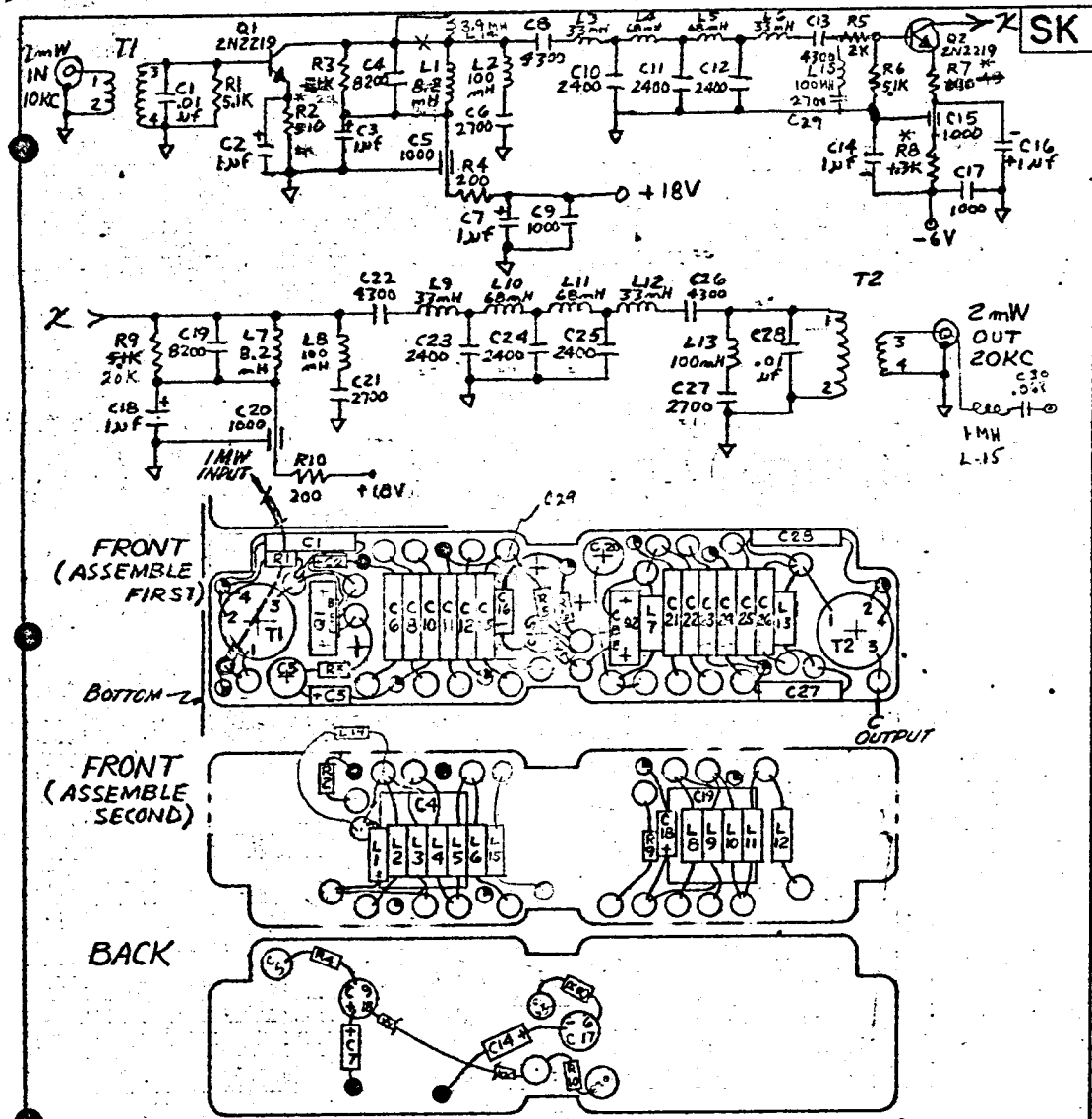

NO. REQD.	MFR OR STL PART NO.	MFR	DESCRIPTION	SYM
28	4073-062	LERCO	TERMINAL, INSUL ST/OFF	○
2	ET 2066	STL	TERMINAL, GRD F/T	●
8	ET 2064	STL	TERMINAL, GRD ST/OFF	◐
2	TO-5		HEATSINK, BORON/NITRATE	
2	0-3	GENERAL/CERAMIC	TRANSFORMER	T1, 2
2	2N2219	MOTOROLA	TRANSISTOR	Q1, 2
2	SWD-3900	ESSEX-SUPER	3.9 mH INDUCTORS	L1, L14
4	SWD-68,000	ESSEX-SUPER	68 mH INDUCTORS	L4, 5, 10, 11
4	SWD-33,000	ESSEX-SUPER	33 mH	L3, 6, 9, 12
~~3~~ 4	SWD-100,000	ESSEX-SUPER	100 mH	L2, 8, 13 L15
~~2~~	SWD-8200	ESSEX-SUPER	8.2 mH INDUCTORS	~~L1~~, 7
1		NYT	1 MH - INDUCTOR	L15
3	FASC-102W	ALLEN/BRADLEY	1000 PF CAPACITOR, F/T	C5, 15, 20
2	SS5A-102W	ALLEN/BRADLEY	1000 PF , ST/OFF	C9, 17,
6	CYFM20C242J	CORNING	2400 PF	C10, 11, 12, 23, 24, 25
4	CYFM20C432J	CORNING	4300 PF	C8, 13, 22, 26
~~3~~ 4	CYFM20C272J	CORNING	2700 PF	C6, 21, 27 C29
2	CYFM30C822J	CORNING	8200 PF	C4, 19
6	150D105X0020A2	SPRAGUE	1 uf	C2, 3, 7, 14 16, 18,
2	CYFM30C103J	CORNING	.01 CAPACITOR	C1, 28
1	MYLAR	U.S. EDCOR	.068 MFD 100V "	C30
1			1.3K RESISTOR	R8
1			~~680 Ω~~ 43 Ω - ① 180 Ω - ②	R7
~~1~~			~~2K~~	~~R5~~
2			200 Ω	R4, 10
2			20 K	R3, R9
1			~~510 Ω~~ 1.0 K - ① 1.8 K - ②	R2
~~4~~ 2			5.1K RESISTOR	R1, R3, R4 ~~R5~~

ORIGINATOR	DATE	TITLE
L. L. FREED	10-29-63	X 2 MUL. 20 KHZ
JB		
MJO		

ENGINEERING SKETCH
SPACE TECHNOLOGY LABORATORIES, INC.
LOS ANGELES, CALIFORNIA

SK A-11502-2

SHEET OF

STL Form 523B (Rev. 2-59)

T1
PRI 26T #32
SEC 140T #32
SEC. RESONATES TO 10KC WITH .01 uf

T2
PRI 70T #32
SEC 10T #32
SEC. RESONATES TO 20KC WITH .01 uf

* R2, R7, R8 SELECTED VALUES ON ELECTRICAL TEST

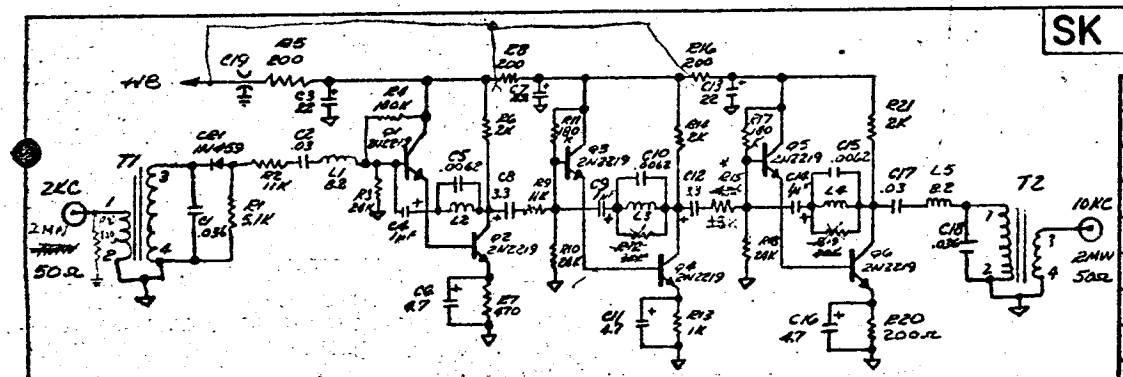

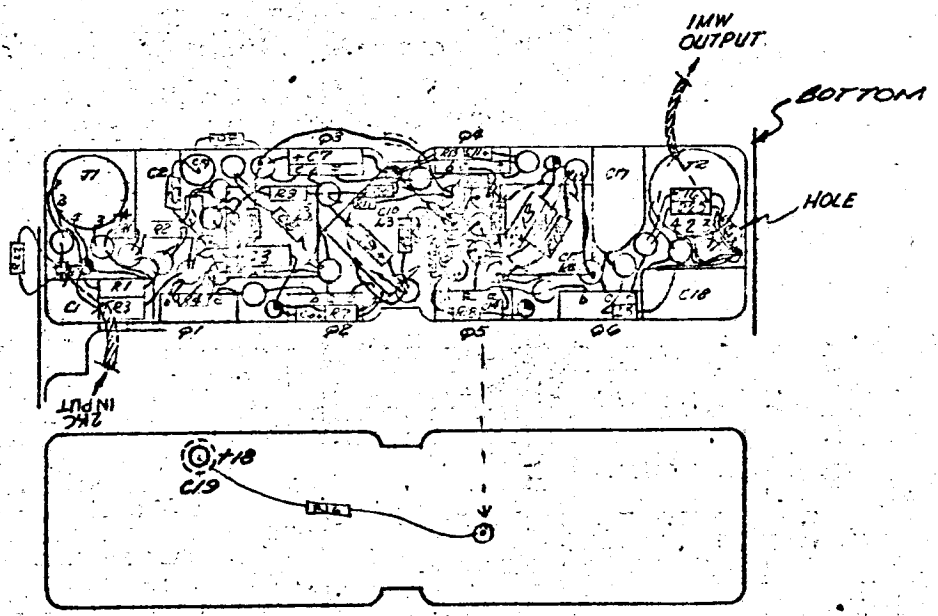

* R15 SELECTED VALUE

L1-L2-L3 - 742 TURNS #36 WIRE
Fo = 10KC WITH .0062 MF (40 MH)
T1-150 MH SEC 420 T #36 WIRE PRI-70T #36 WOUND OVER #4 END SEC RESONATES TO 2KC WITH .04 MF T/R 6.3:1
T2 - PRI 350 T #36 RESONATES TO 10KC WITH .04 MF (4 MH.) SEC - 50T #36 WOUND OVER #4 END

SK | CHG LTR

NO REQD	MFR OR STL PART NO	MFR	DESCRIPTION	SYM
28	4073-062	LERCO	TERMINAL INSUL	○
5	ET2064	STL	TERMINAL GRD	◐
1			18K - ① RESISTOR 68K - ②	R15
1			100 Ω RESISTOR	R22
6	A-11021	STL	HEAT SINK BORON/NITRATE	
6	2N2219		TRANSISTOR	Q1,2,3,4,5,6
4	55120	MAGNETICS	CORE	T2,L1,L2,L3
1	0-3	GENERL CERAMICS	CORE	T1
2	SWD-8.2	NYTRONICS	8.2 WEE-DUCTOR	L1,L2
1	FA5C-102W	ALLEN BRADLEY	.001 FEED THRU CAPACITOR	C19
2	150D	SPRAGUE	3.3 35V	C8,12,
3	150D	SPRAGUE	4.7 35V	C6,11,16
3	CYFM30C622J	CORNING	.0062	C5,10,15
3	150D	SPRAGUE	1 35V	C4,9,14
3	150D	SPRAGUE	22 35V	C3,7,13
2	ELMENCO	HRDM-30-303J	.03	C2,17
2	ELMENCO	HRDM-30-363J	.036 CAPACITOR	C1,18
1			1K RESISTOR	R13
2			30K RESISTOR	R12,R13
1			470	R7
3			2K	R6,14,21
4			200	R5,8,16,20
3			180K	R4,11,17
2			24K	R3,10,
2			11K	R2,R9
1			5.1K RESISTOR	R1

ORIGINATOR Ponce de Leon | DATE 12 NOV 63 | TITLE X 5 MUL 10 KHZ

MJO

ENGINEERING SKETCH
SPACE TECHNOLOGY LABORATORIES, INC.
LOS ANGELES, CALIFORNIA

SK A-11502-3

SHEET OF

STL Form 523B (Rev. 2-59)

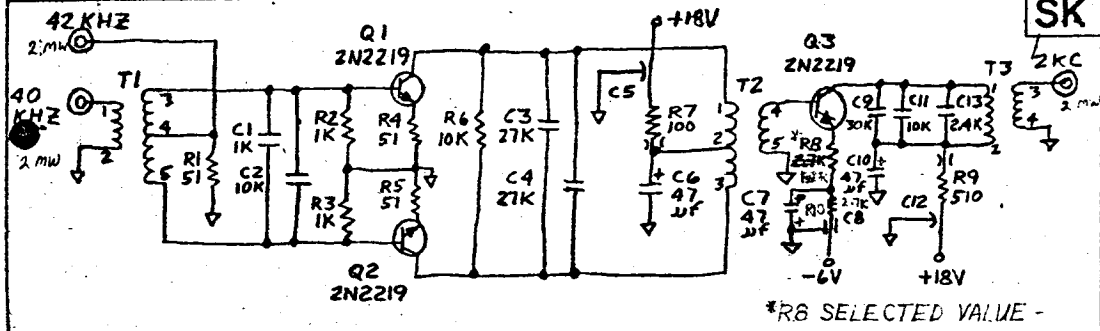

*R8 SELECTED VALUE -

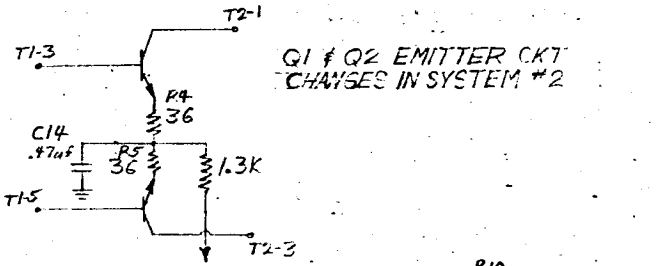

Q1 & Q2 EMITTER CKT CHANGES IN SYSTEM #2

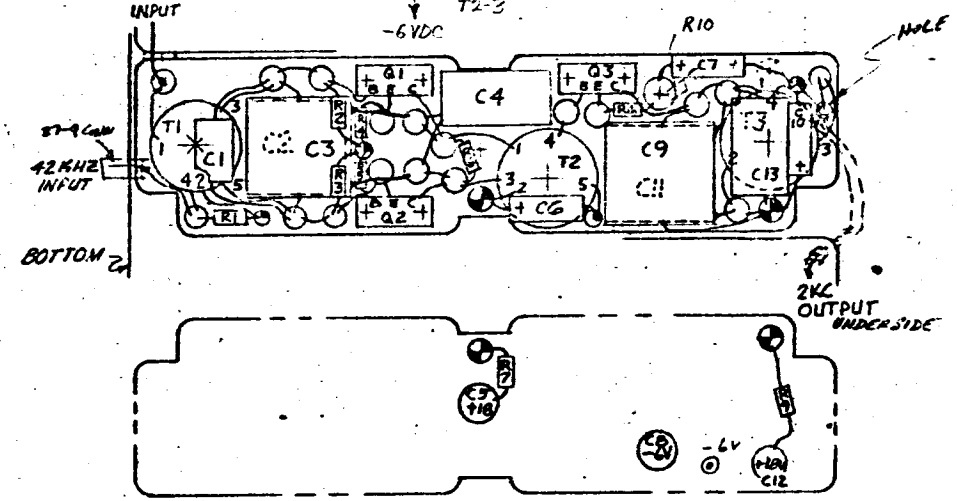

T1
PRI. 80T #34
SEC. 250T BIFILAR #34

T2
PRI. 450T BIFILAR #34
SEC. 256T #32

T3
PRI. 1400T #34
SEC. 100T #30

SK

NO. REQD.	MFR OR STL PART NO.	MFR	DESCRIPTION	SYM
2	4442-B-9	USECO	TERMINAL, INSUL F/T	
17	4073-062	LERCO	TERMINAL, INSUL S/O	
3	ET 2064	STL	TERMINAL, GRD	
3	A-11022	STL	HEAT SINK, BORON NITRATE	
3	BAI-55120-W4	MAGNETICS	TRANSFORMER	T2,3
1	T68-2	MICRO-METALS	TRANSFORMER	T1
3	2N2219	MOTOROLA	TRANSISTOR	Q1,2,3
1	150D474X0020A2	SPRAGUE	.47uf CAPACITOR	C14
1	VY21C242J	VITRAMON	2.4KPf CAPACITOR	C13
1	PT4-1004-HRDM-30-303J	ELMENCO SILVER-MICA	30KPf	C9
1	FA5C-102W	ALLEN/BRADLEY	1000 F/T	C8
3	SCHA76HP035A2	TEXAS-INSTRU.	47 uf	C6,7,10
2	SS5A-102W	ALLEN/BRADLEY	1000 ST/OFF	C5,12
2	PT4-1004-HRDM-30-273J	ELMENCO SILVER-MICA	27KPf	C3,4
2	CYFM30C103J	CORNING	10KPf	C2,11
1	VY16C102J	VITRAMON	1KPf CAPACITOR	C1
2			51Ω RESISTOR 36Ω SYS #2	R4,R5
1			1.2K 1.5K RESISTOR	R8
1			510Ω RESISTOR	R9
1			2.7K	R10
1			100Ω	R7
1			10K	R6
2			1K	R2,3
31			51Ω RESISTOR	R1, ~~4,5~~

ORIGINATOR	DATE	TITLE	ENGINEERING SKETCH
L. L. FREED	11-5-63	MIXER 2 KHZ	SPACE TECHNOLOGY LABORATORIES, INC. LOS ANGELES, CALIFORNIA
J.P.D.P.	11-12-63		SK A-11502-4
MJO 4126-01-01			SHEET OF

STL Form 523B (Rev. 2-59)

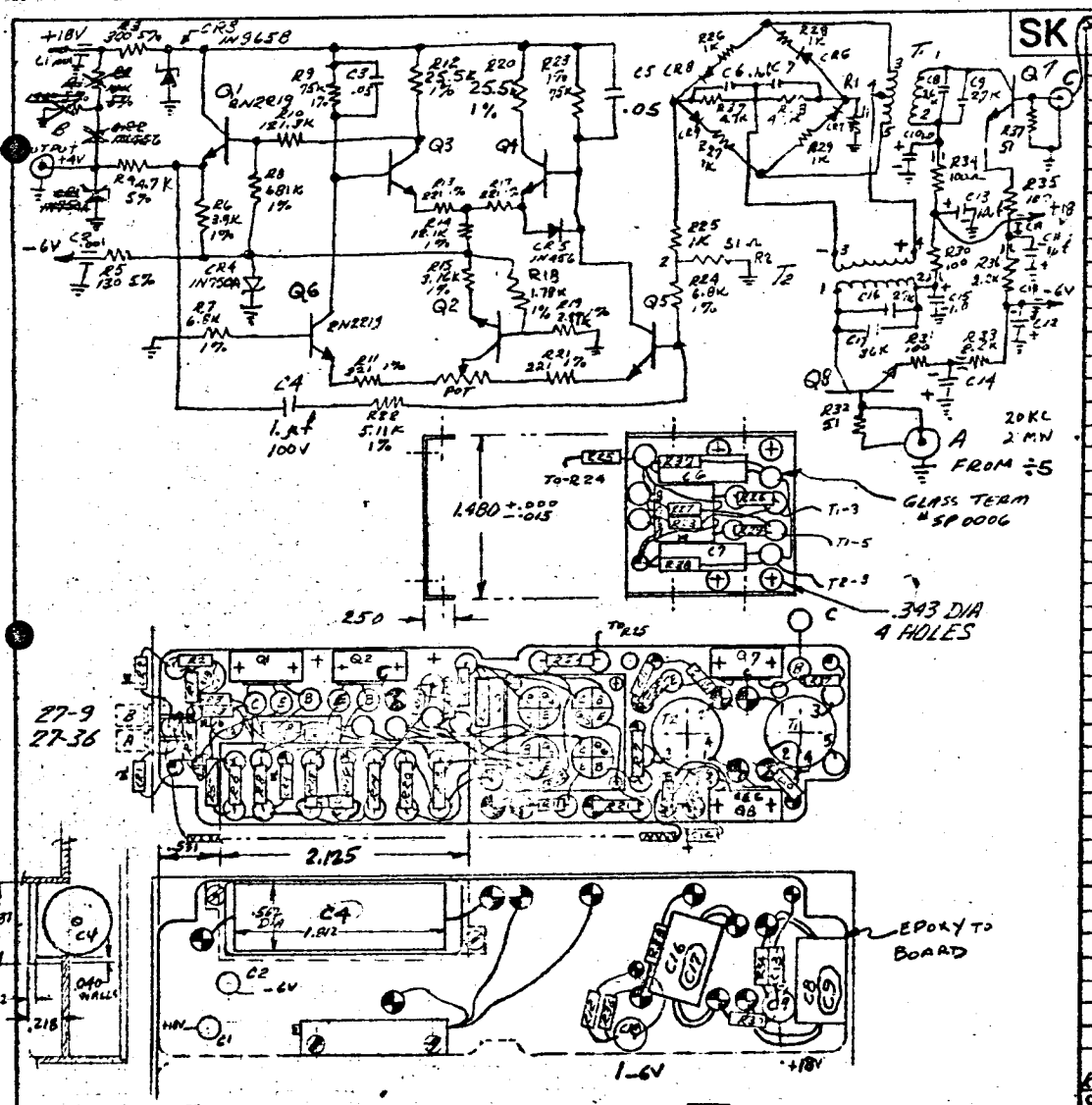

NO. REQD	MFR OR STL PART NO.	MFR	DESCRIPTION	SYM.
10			TERMINAL INSL FEED THRU	
49			TERMINAL INSL	
8			TERMINAL GND	
2			TERMINAL GND FEED THRU	
4		STL	HEATSINK	
1		STL	HEATSINK SPECIAL FOR Q3 THRU 6	
2	CF109-02	GENERAL ELECTRIC	TRANSFORMER	T1 & T2
8	2N2219	MOTOROLA	TRANSISTOR	Q1 THRU Q8
~~1~~	~~1N754A~~	~~IRC~~	~~DIODE~~	~~CR4~~
1	1N456	CONTINENTAL	DIODE	CR2 & CR5
1	1N965B	IRC	DIODE	CR3
1	1N750A	IRC	DIODE	CR4
1	FA4000	FAIRCHILD	DIODE CR6-7-8-9	CR
6			1.0µf CAPACITOR	C10, C11, C12, C16, C18 & C19
2	CYFM20C272J	CORNING	2.7K "	C9 & C15
2	CYFM20C362J	CORNING	3.6K "	C8 & C17
2	MCB0V104AK	AEROVOX	.1µf "	C6 & C7
1	96P105915Z	SPRAGUE	1.µf 100V VITQ "	C4
2	MCB0V503AK	AEROVOX	.05µf "	C3 & C5
2	FA5C-102W	ALLEN BRADLEY	.001 " FEED THRU	C1 & C2
2	SS5A-102W	ALLEN BRADLEY	.001 " STAND OFF	C13 & C14
2			4.7K RESISTOR 1/8 W 5%	R37 & R29
2			2.2K " 1/8 W 5%	R33 & R36
2			51Ω " 1/8 W 5%	R32 & R37
4			100Ω " 1/8 W 5%	R30, R31, R34, R35
5			1K " 1/8 W 5%	R33, R28 & R27, R28 & R29
1			5.11K " 1/8 W 1%	R22
1			2.87K " 1/8 W 1%	R19
1			1.78K " 1/8 W 1%	R18
1	236L	BOURNS	200Ω " POT	R16
1			3.16K " 1/8 W 1%	R15
1			12.1K " 1/8 W 1%	R14
2			25.5K " 1/8 W 1%	R12 & R20
4			221Ω " 1/8 W 1%	R11, R13, R17 & R21
1			121.3K " 1/8 W 1%	R10
2			75K " 1/8 W 1%	R9 & R23
1			681K " 1/4 W 1%	R8
2			6.8K " 1/8 W 1%	R7 & R24
1			3.9K " 1/8 W 1%	R6
1			130Ω " 1/8 W 5%	R5
1			4.7K " 1/8 W 5%	R4
1			300Ω " 1/8 W 5%	R3
1			~~MOX~~ 51Ω " 1/3 W 5%	R2
1			~~MOX~~ 1K Ω " 1/8 W 5%	R1

ORIGINATOR	DATE	TITLE	ENGINEERING SKETCH
AKARIS. I	11-15-63	20 KC PHASE DETECTOR AND D.C. AMPLIFIER	SPACE TECHNOLOGY LABORATORIES, INC. LOS ANGELES, CALIFORNIA
MJO 4126-01-02			SK A-11502-5
			SHEET OF

STL Form 5238 (Rev. 2-59)

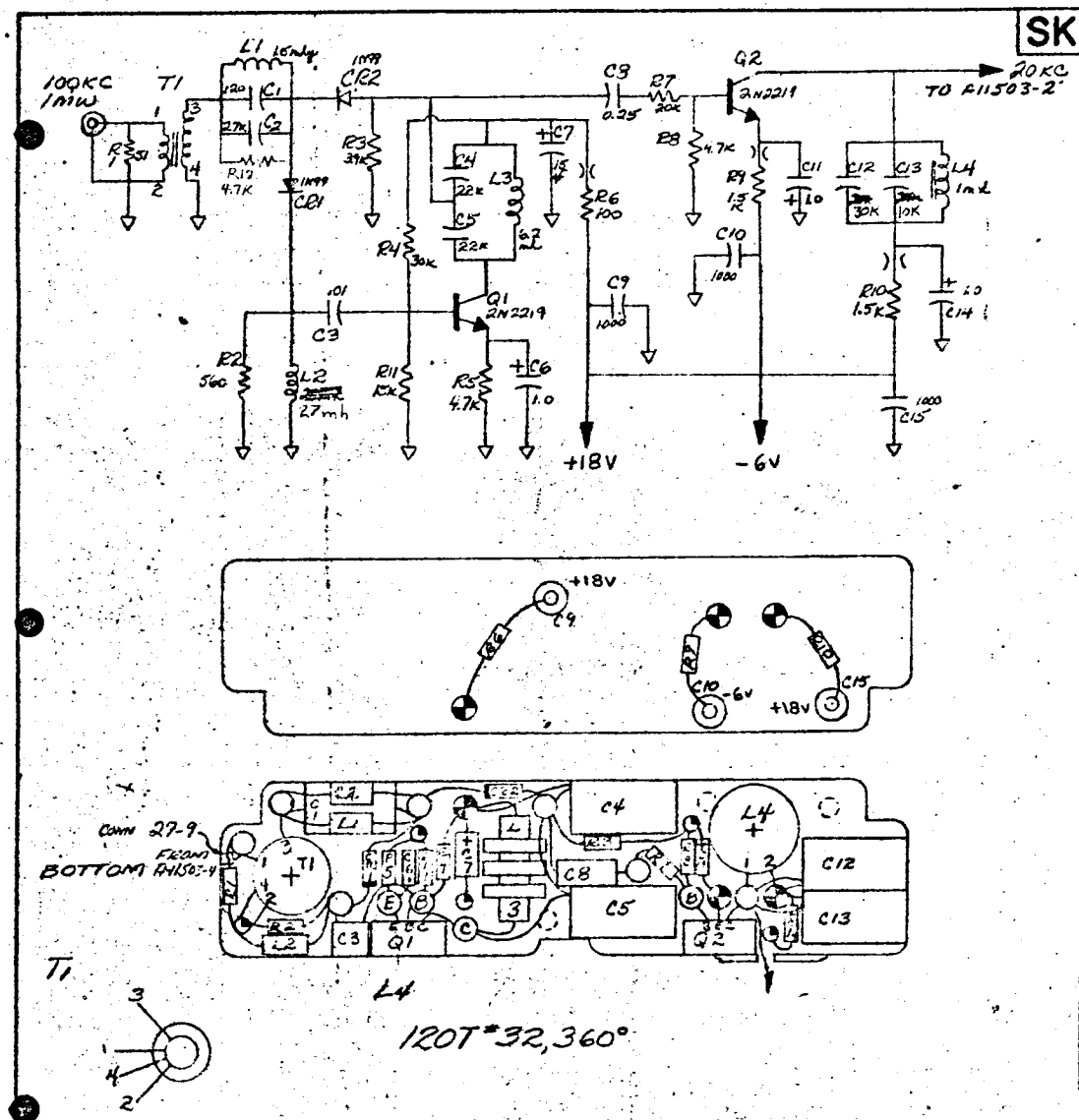

SK A-11503-1

NO REQ	MFR OR STL PART NO	MFR	DESCRIPTION	SYM
2	1N99	CHG LTR	DIODE	CR1
3			TERMINAL FEED THRU INSUL.	
5	ET2064-	STL	TERMINAL GND	
11	4073-062	LERCO	TERMINAL INSUL	
1	EC4140	MILLER	6.2MH CHOKE #4670	L3
1	WEE 1500	ESSEX	1.5MH CHOKE	L1
1	WEE 25000	ESSEX	27MH CHOKE	L2
1	CF108 0-3	GEN. CERAMICS	TORIOD	T1
1	55120-W4	MAGNETICS	TOROID	L4
2	A-11022	STL	HEAT SINK	
2	2N2219	MOTOROLA	TRANSISTOR	Q1,2
1	DM30-203J	ELMENCO	30K PF SILVERMICA CAPACITOR	C12,
3	SS5A-102W	ALLEN BRADLEY	1000PF STAND OFF	C9,10,15
1	CR81W254AK	AEROVOX	0.25μF ROLLED CERAMIC	C8
1	EC1215	SPRAGUE	15μF TANTALUM	C7
3	EC1245	SPRAGUE.	1.0μF TANTALUM	C6,11,14
2	DM-30R223J	ELMENCO	22K SILVERMICA	C4,5
1	VK30CW103K	VITRAMON	0.01PF	C3
1	CY20C272	CORNING	2700PF GLASS	C2
1	CY10C121	CORNING	120PF GLASS CAPACITOR	C1
1	CYFM30C103J	CORNING	10KPF GLASS CAPACITOR	C13
1			15K Ω RESISTOR	R11
2			1.5KΩ	R9,10
1			20KΩ	R7
1			100Ω	R6
3			4.7KΩ R12 IN SYS #2 ONLY	R5,8,12
1			30KΩ	R4
1			3.9KΩ 10KΩ SYS #2	R3
1			560Ω	R2
1			51Ω RESISTOR	R1

ORIGINATOR: R. C. PITCHER
DATE: 11-18-63
TITLE: A11503-1 — 10KC — 20KC — A11503-2
MJO

ENGINEERING SKETCH
SPACE TECHNOLOGY LABORATORIES, INC.
LOS ANGELES, CALIFORNIA

SK A-11503-1
SHEET OF

14 HRS

STL Form 5218 (Rev. 2-59)

SK A-11503-2 | CHG LTR

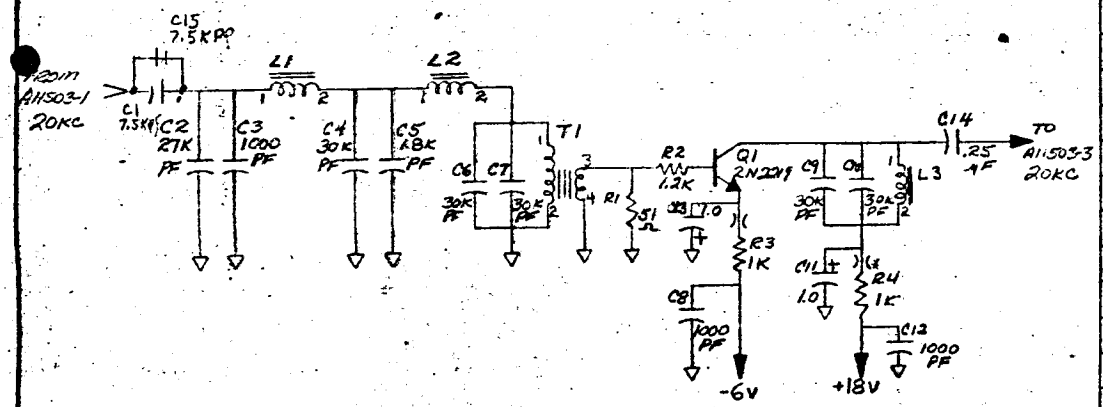

L1,L2
50T #32,360°

L3
120T #32,360°

T1
Pri: 120T #32,360°
Sec: 40T #32,360°

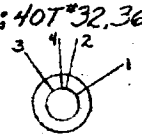

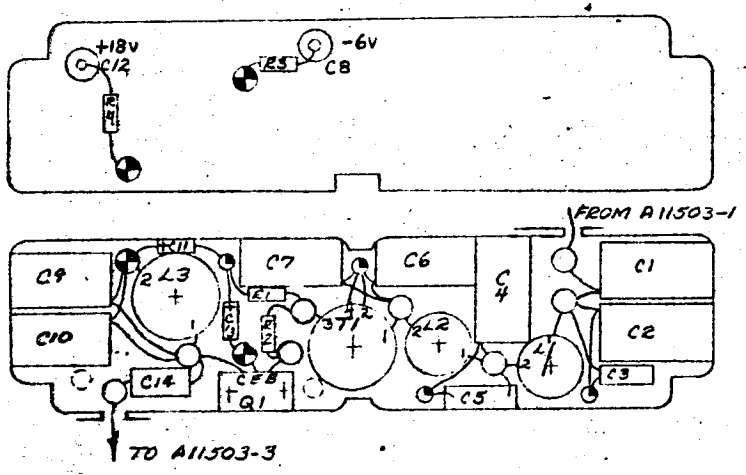

NO REQ	MFR OR STL PART NO	MFR	DESCRIPTION	SYM
1	2N2219	MOTOROLA	TRANSISTOR	Q1
4	ET2064	STL	TERMINAL GND	◐
8	4073-062	LERCO	TERMINAL INSUL	○
2			TERMINAL FEED THRU INSUL	◕
2	CF108-0-3	GEN.CERAMICS	TOROID	L1,2
2	55120-W4	MAGNETICS	TOROID	T1,L3
1	A-11022	STL	HEATSINK	
1	CR89W254AK	AEROVOX	0.25UF ROLLED CERAMIC CAPACITOR	C14
2	EC1245	SPRAGUE	1.0 UF TANTALUM 35V CAPACITOR	C11,13
2	SS5A-102W	ALLEN BRADLEY	1000 PF STAND OFF	C8,12
1	DM-19-152J	EL MENCO	1500 PF SILVER MICA	C5
5	DM-30-303J	EL MENCO	30K PF SILVER MICA	C4,6,7,9,10
1	DM-15-102J	CORNING	1000PF GLASS	C3
1	DM-30-273J	EL MENCO	27K PF SILVER MICA	C2
1		EL MENCO	7.5 KPF MOLDED CAPACITOR	C1, C15
1			1.2K RESISTOR	R2
2			1K RESISTOR R4 510Ω SYS #2	R3,4
1			51Ω RESISTOR	R1

ORIGINATOR: R. Pitcher | DATE | TITLE: FILTER AMP. | A11503-1 → A11503-2 20KC → A11503-3

MJO

ENGINEERING SKETCH
SPACE TECHNOLOGY LABORATORIES, INC.
LOS ANGELES, CALIFORNIA

SK A11503-2

SHEET OF

9HRS

STL Form 523B (Rev. 2-59)

SK A11503-3 | CHG LTR

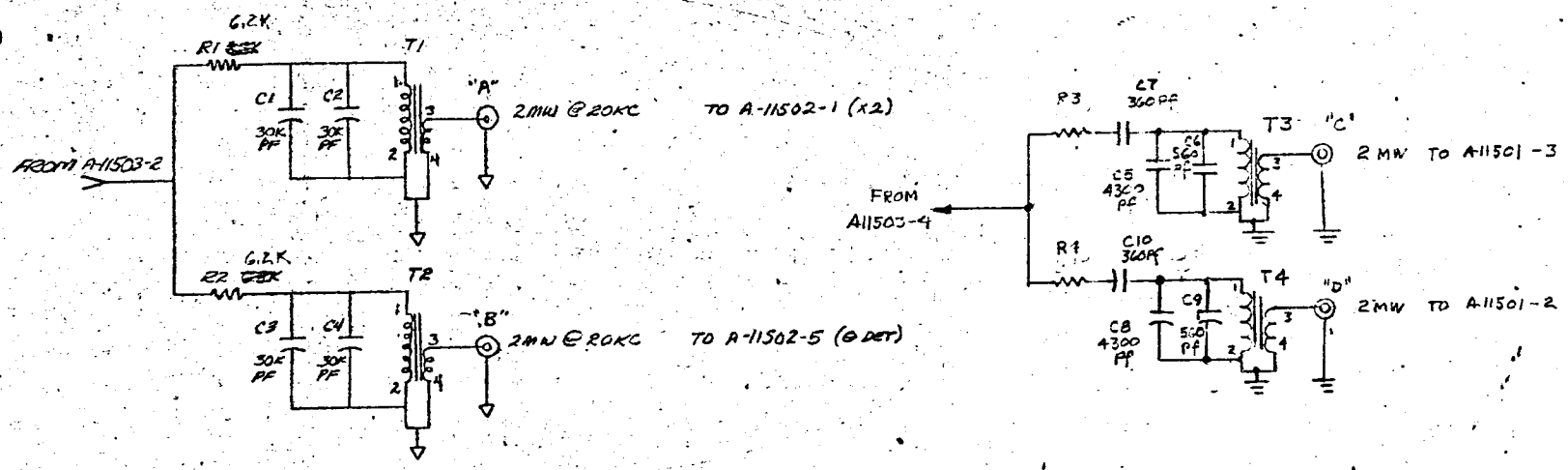

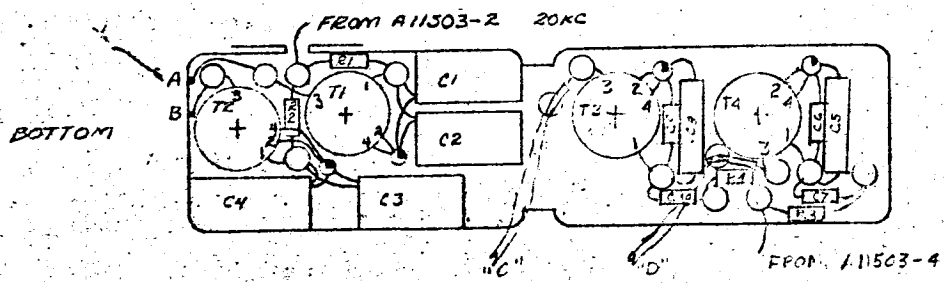

T1, 2

PRI: 120T, #32, 360°
SEC: 20T, #32, 360°

T 3, 4
PRI: 160T #32 360°
SEC 17T #32 360°

NO REQ	MFR OR STL PART NO	MFR	DESCRIPTION	SYM
24	ET 2064	STL	TERMINAL GND	⊖
2			8.2K RESISTOR -(1) 6.8K-SYS #(2)	R3, R4
12	4073-562	LERCO	TERMINAL INSUL	○
2	CYFM15C361J	CORNING	360 PF GLASS CAPACITOR	C7, C10
2	T68-3	MICRO-METALS	TOROID	T3, T4
2	55120-W4	MAGNETICS	TOROID	T1, 2
2	CYFM20C432J	CORNING	4300 PF CAPACITOR	C5, C8
4	DM-30-303J	ELMENCO	30KPF SILVER MICA CAPACITOR	C1, 2, 3, 4
2	CYFM10C271J	CORNING	PF CAPACITOR 560 PF	C6, C9
2			RESISTOR 6.2K	R1, 2

ORIGINATOR: R G PITCHER | DATE: 11/26/63 | MJO

TITLE: A11503-2 → AMP 20KC → 2mw, 2mw

ENGINEERING SKETCH
SPACE TECHNOLOGY LABORATORIES, INC.
LOS ANGELES, CALIFORNIA

SK A11503-3

SHEET OF

3 WES

STL Form 5238 (Rev. 2-59)

125

SK A-11503-4 CHG LTR

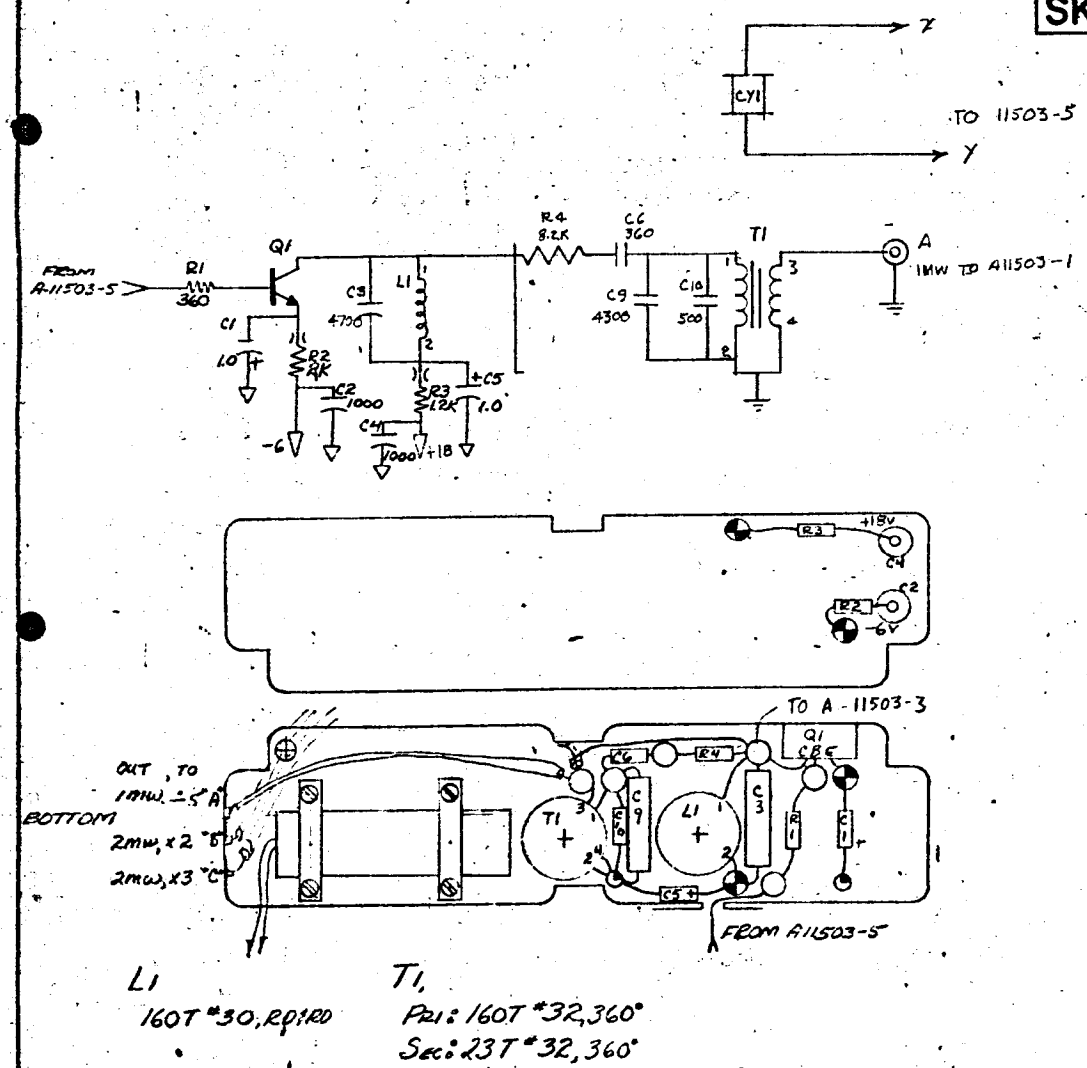

NO REQ	MFR OR STL PART NO.	MFR.	DESCRIPTION	SYM
3	ET 2064	STL	TERMINAL GND	
2			TERMINAL FEED THRU	
5	4073-062	LERCO	TERMINAL INSUL	
1	A-11022	STL	HEAT SINK	
1	2N2219	MOTOROLA	TRANSISTOR	Q1
2	T68-3	MICROMETALS	TOROID	L1, T1,
1	G-4ES	J KNIGHT	100KC CRYSTAL	CY1
1	CC 2060 G		510 PF CAPACITOR	C10
1	CC 2056 G		360 PF	C6
2		CORNING	4300PF GLASS	C3,9
2	EZ 1245	ALLEN BRADLEY	1000PF STAND OFF	C2,4
2			1.0 UF TANTALUM CAPACITOR	C1,5
1		ELMENCO	4.7 PF CAPACITOR	C3
1			8.2K RESISTOR	R4
1			1.2K	R3
1			2K	R2
1			360Ω RESISTOR	R1

ORIGINATOR: R C PITCHER
DATE: 11-21-63
TITLE: 100KC A11503-5 AMP 100KC 1MW ÷5 2MW x2 2MW x3
MJO

ENGINEERING SKETCH
SPACE TECHNOLOGY LABORATORIES, INC.
LOS ANGELES, CALIFORNIA

SK A-11503-4
SHEET OF

STL Form 5238 (Rev. 2-59)

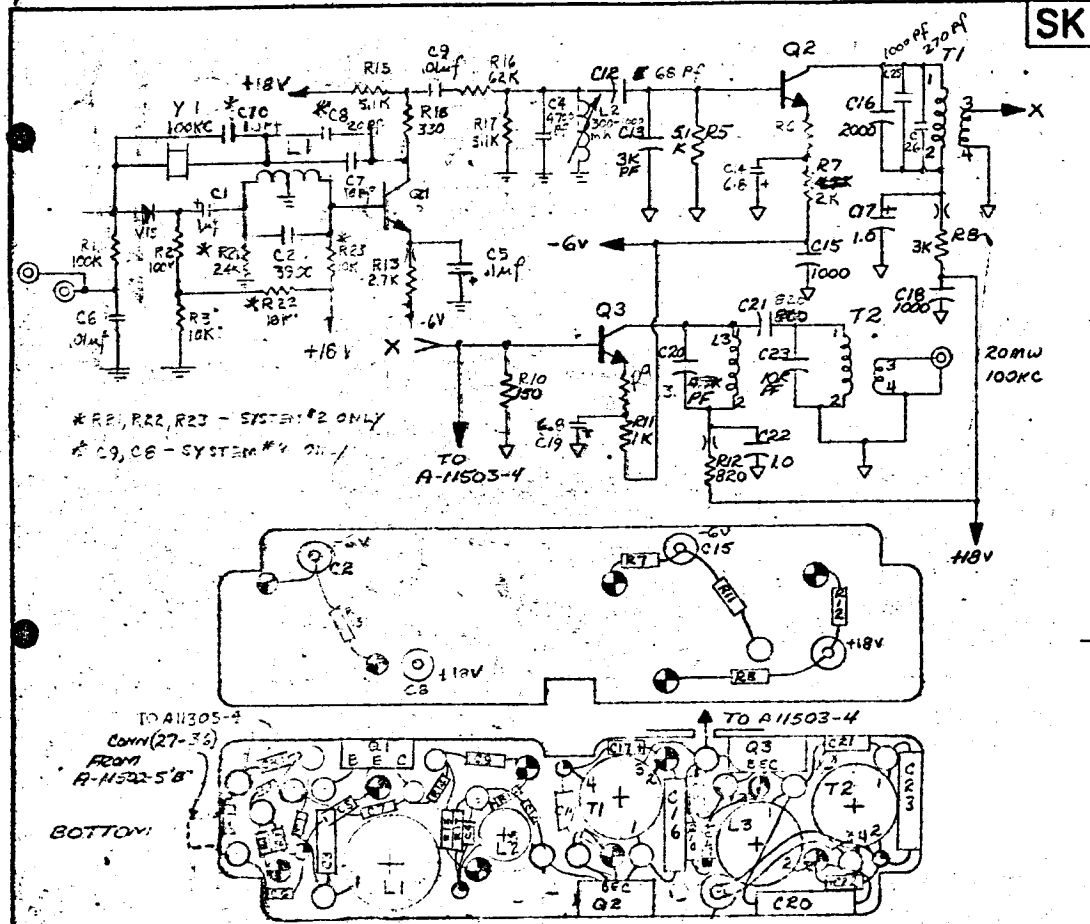

T1: Pri: 250T #32, 360°
Sec: 32T #32, 360°

L3: 160T #32, 360°

T2: Pri: 105T #32, 360°
Sec: 23T #32, 360°

L1: 1 80T-CT #30 RD & RD

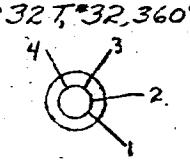

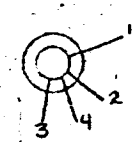

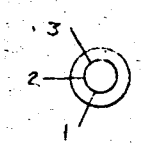

SK	A-11503-5	CHG LTR	CENTRALAB	20 pf CAPACITOR C8 / 10 pf CAPACITOR C7, C10	
#2	VK30CW		VITRAMON	~~CHOKE 4.7MH~~ CAPACITOR .01uf	C9 6
1	1505-10		CAMBION	~~CHOKE 10MH~~ COIL 300-1000 mh	L2
#4	T68-3		MICROMETALS	TOROID	T1,2,L3 1
3	2N2219		MOTOROLA	TRANSISTOR	Q1,2,3
1	V15		P.S.I.	DIODE	CR1
1	CY15C801J		CORNING	820 PF GLASS CAPACITOR	C21
1	CY30C103J			10K PF	C23
1	CY20C472J		EL MENCO	30 PF MOLDED MICA	C20
1	CY20C102J			1K PF	C16
1	CY20C302J			3K PF	C13
1			CORNING	68 GLASS	C12
1	150D104X9035A2		SPRAGUE	.1uf TANTALUN	C5
1	VK		VITRAMON	4300 pf	C4
1			CORNING	3900 pf GLASS CAPACITOR	C2
1				62 K RESISTOR	R16
1				330Ω	R14
1				2.7K	R13
1				18 K RESISTOR	R4
4	SS5A-102W		ALLEN-BRADLEY	1000 pf STANDOFF CAPACITOR C25	3,15,18,
5	150D105X9035A2		SPRAGUE	1.0uF TANTALUM	C1 17,19,22
3	A11022		STL	HEAT SINK	
1				820Ω RESISTOR	R12
1				510	R11
1				150Ω	R10
1				30Ω - ① 39Ω - ②	R6
1				36Ω	R9
2				2K	R7
#3				5.1K	R5,15,17
1				10K	R3, R23
#1				3K	R8,20
#2				100K RESISTOR	R1, R2

ORIGINATOR	DATE	TITLE	
R.E. PITCHER	11-21-63		ENGINEERING SKETCH SPACE TECHNOLOGY LABORATORIES, INC. LOS ANGELES, CALIFORNIA
MJO			SK A-11503-5
			SHEET OF

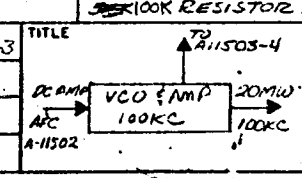

STL Form 523B (Rev. 2-59)

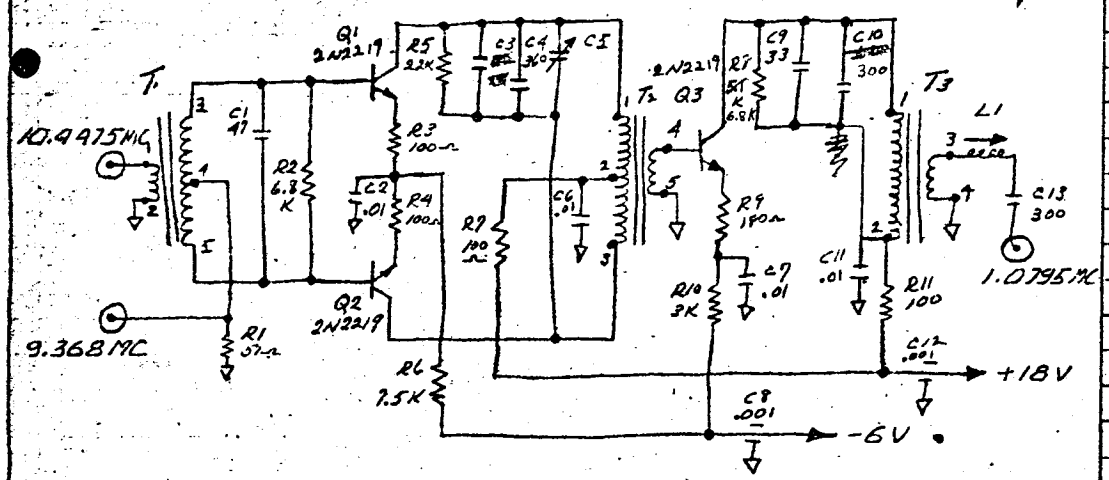

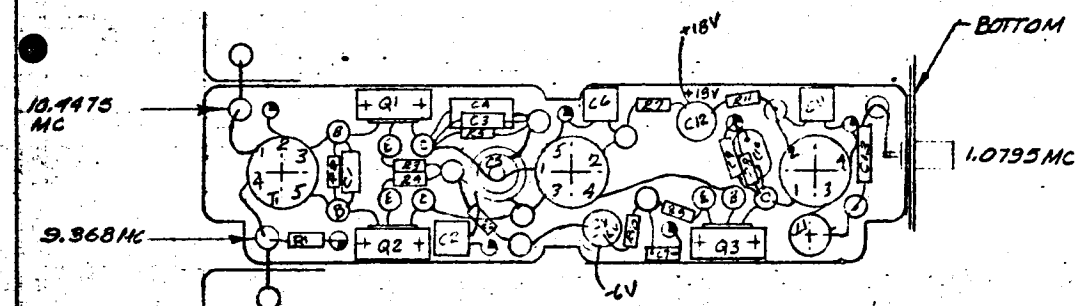

10.4475MC → MIXER #7 → 1.0795 MC
9.368MC →

T1	T2	T3
PRIM 4T #22, 360°	PRIM 100T CT #30, RD & RD	PRIM 100T, RD & RD #30
SEC 26T CT #24, 360°	SEC 10T #26, 360°	SEC 7T, 360° #26

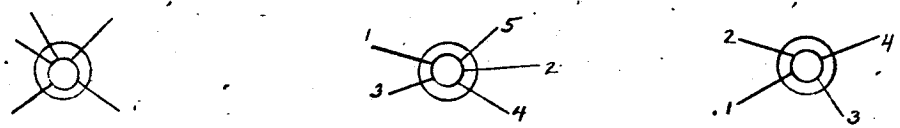

SK | CHG LTR

NO. REQD	MFR or S.T.L. PART NO.	MFR	DESCRIPTION	SYM
17			TERMINAL INSUL	
6		12B08/E12064	TERMINAL GND	
3			HEAT SINK TO-5	
1	27-9	AMPHENOL	CONNECTOR	
3	2N2219	MOTORLA	TRANSISTOR	Q1, Q2 & Q3
3	T50-2	MICRO METALS	TRANSFORMER	T1, T2, & T3
1	4313	MILLER	COIL	L1
1	CYFM10C301J	CORNING	300 PF CAPACITOR	C13
1	CYFM15C301J	CORNING	~~[illegible]~~ 300 pf "	C10
1	CYFM10C[illegible]J	CORNING	33 PF ① 82 pf ②	C9
2	FA5C-102W	ALLEN BRADLEY	.001 " FEED THRU	C8 & C12
1	JMC 2950	JOHANSON	"	C5
1	CYFM15C361J	CORNING	360 PF "	C4
1	CYFM10C[illegible]J	CORNING	~~22 PF~~ 24 pf ① " 13pf ②	C3
4	VF306CW103K	VITRAMON	.01 "	C2, C6 C7 & C11
1	CYFM10C470J	CORNING	47 PF "	C1
1			3K RESISTOR 1/4 W	R10
1			180Ω " "	R9
1			~~[illegible]~~ 6.8 K " "	R8
1			7.5K " "	R6
1			22K " "	R5
4			100Ω " "	R3, R4 R7 & R11
1			6.8K " "	R2
1			51Ω " "	R1

ORIGINATOR: I. HARRIS
DATE: 10-2-63
TITLE: MIXER 1.0795 MHZ
MJO 4126-01-01

ENGINEERING SKETCH
SPACE TECHNOLOGY LABORATORIES, INC.
LOS ANGELES, CALIFORNIA
SK A-11600-1
SHEET OF

STL Form 5738 (Rev.

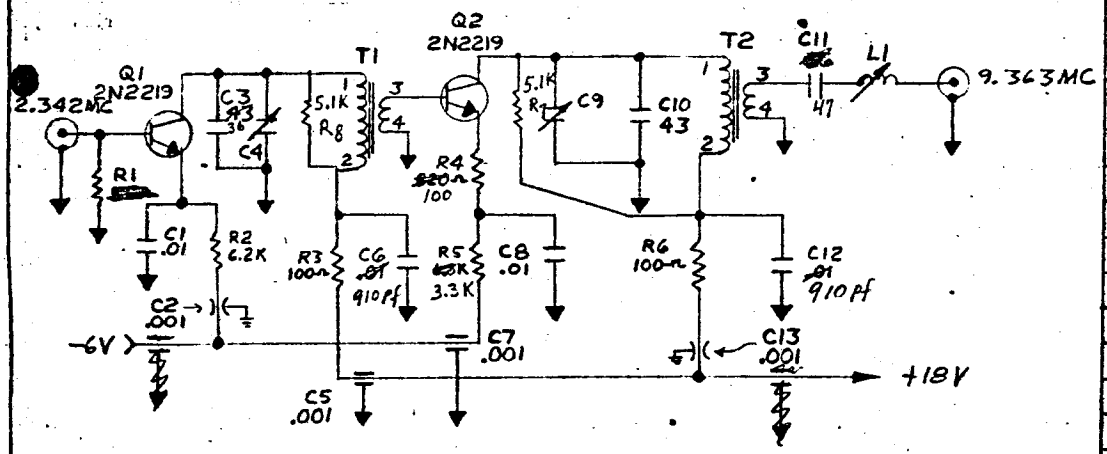

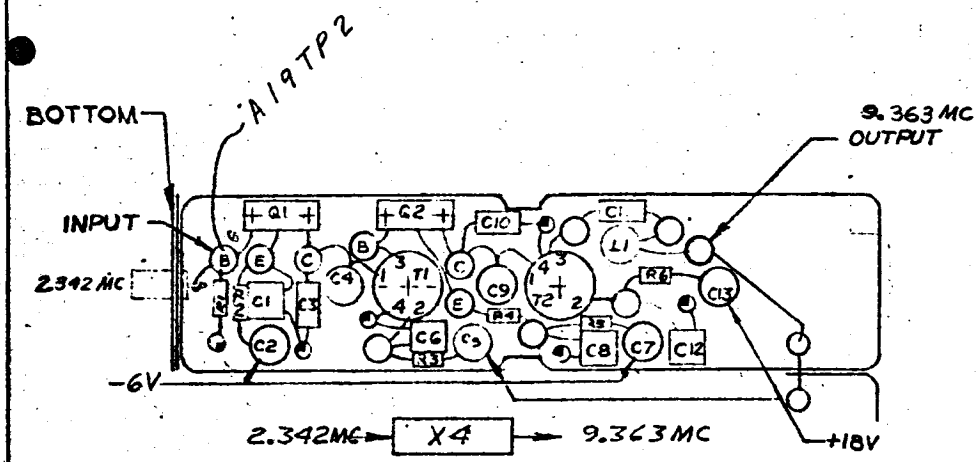

T1
PRIM. 28T #26, 360°
SEC. 7T #24, 360°

T2
PRIM. 28T #26, 360°
SEC. 3T #24, 360°

L1
TUNED TO 9.368MC

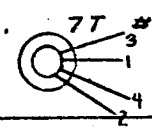

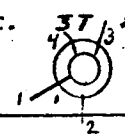

SK

NO. REQD	MFR OR STL PART NO.	MFR	DESCRIPTION	SYM
1	27-9	AMPHENOL	CONNECTOR	
12			TERMINAL, INSUL	
6	1280B/ET2064		TERMINAL, GND	
2			HEAT SINK, TO-5	
2	T50-2	MICROMETALS	TRANSFORMER	T1, T2
1	4308	MILLER	COIL	L1
2	2N2219	MOTOROLA	TRANSISTOR	Q1, Q2
1		CORNING	36 pf	C3
2		CORNING	1000 pf ① 2000 pf ②	C6, C12
2	JMC2950	JOHANSON	CAPACITOR, VARIABLE	C4, C9
1	CYFM10C540J	CORNING	47 CAPACITOR	C11
2	CYFM10C430J	CORNING	43 pf CAPACITOR	C3, C10
4	FA5C-102W	ALLEN BRADLEY	.001 µf CAPACITOR FEEDTHRU	C2, C5, C7, C13
2	VK306CW103K	VITRAMON	.01 µf CAPACITOR	C1, C6, C8, C12
2			5.K RESISTOR 1/4 W	R7, R8
1		3.3	6.8K RESISTOR 1/4W	R5
1		100	8.2Ω RESISTOR 1/4 W 300Ω ②	R4
2			100Ω RESISTOR 1/4W	R3, R6
1			6.2K RESISTOR 1/4 W	R2
1			51Ω ① RESISTOR 1/4 W 56Ω ②	R1

ORIGINATOR: L L FREED
DATE: 10-4-63
TITLE: X 4 MUL.
MJO 4126-01-01

ENGINEERING SKETCH
SPACE TECHNOLOGY LABORATORIES, INC.
LOS ANGELES, CALIFORNIA
SK A-11600-2
SHEET OF

STL Form 523B (Rev. 2-59)

SK | CHG LTR

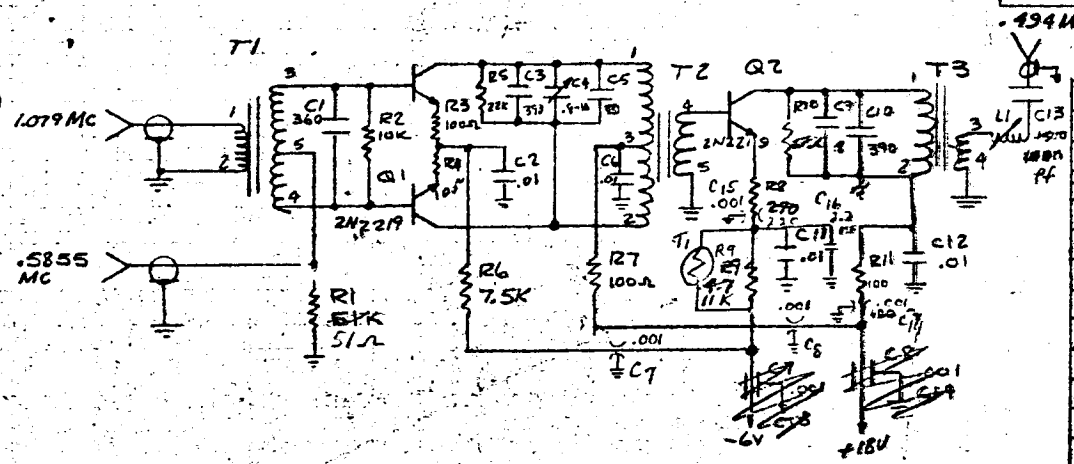

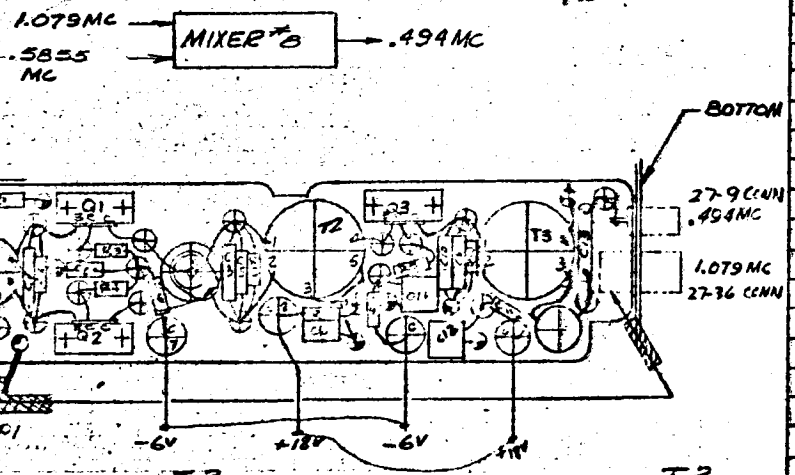

T1 PRIM = 8T NO. 26, 360° SEC = 10T CT NO. 30, RD & RD

T2 PRIM = 200T CT RD & RD NO. 28 SEC = 20T NO. 26 360°

T3 PRIM = 200T RD & RD NO. 28 SEC = 20T NO. 26 13T 360°

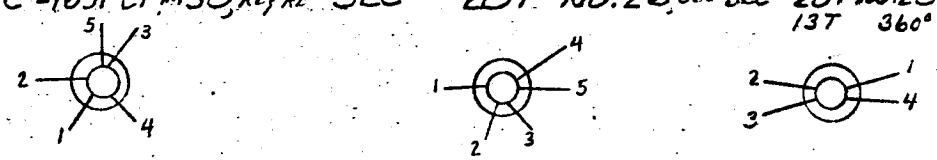

NO. REQD	MFG OR STL PART NO.	MFG	DESCRIPTION	REF DESIG
1	27-36	AMPHENOL	CONNECTOR	
1	27-9	AMPHENOL	CONNECTOR	
1			CRD LUG	
2			CAPACITOR INSULATORS	
17			INSULATED TERMINAL	
7	12208/ET2064	USECO/STL	TERMINAL (GRD)	
1	45114	MILLER	INDUCTOR	L1
3	2N2219		TRANSISTOR	Q1, Q2, Q3
1	150-D	TEXAS INST.	2.2 MF @ 35 V.	C16
1	T50-2.	MICROMETALS	TRANSFORMER	T1
2	T68-2	MICROMETALS	TRANSFORMER.	T2 & T3
1	HEDM-19-[illegible]	ELMENCO	CAPACITOR 200 PF (SILVER MICA)	C13
1	CYFM10C180J	CORNING	18 PF	C9
4	FA5C102W	ALLEN BRADLEY	.001 UF	C7, C8, C14 & C18
1	CYFM10C100J	CORNING	10 PF ① 18 PF ②	C5
1	JMC2059	JOHNSON	8-10 PF	C4
2	CYFM15C391J	CORNING	390 PF.	C3 & C10
4	VK306GW103K	VITRAMON	.01 UF	C2, C6, C11 & C12
1	CYFM15C361J	CORNING	CAPACITOR 360 PF.	C1
1	43RD1	GLENNITE	THERMISTOR 31.5 K	T1
1			RESISTOR 6.8K 1/4 W ±10%	R10
1			4.7K	R9
1			270Ω	R8
1			7.5K	R6
1			22K	R5
4			100Ω	R3, R4, R7, R11
1			10K	R2
1			RESISTOR 51Ω 1/4 W ±5%	R1

ORIGINATOR D.E. Anderson | DATE 10/3/63 | TITLE MIXER .494 MHZ

MJO 4126-01-01

ENGINEERING SKETCH
SPACE TECHNOLOGY LABORATORIES, INC.
LOS ANGELES, CALIFORNIA

SK A-11600-3

SHEET OF

STL Form 5238 (Rev. 2-59)

170

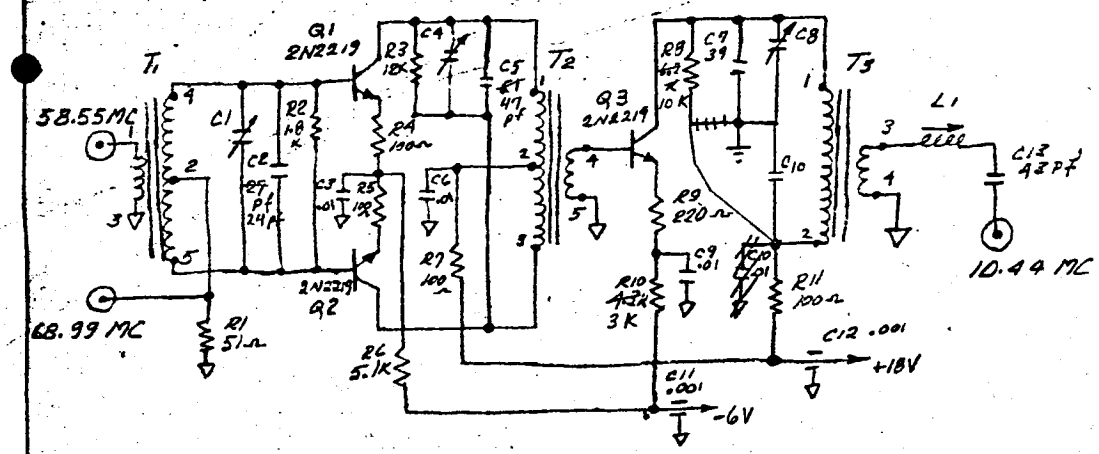

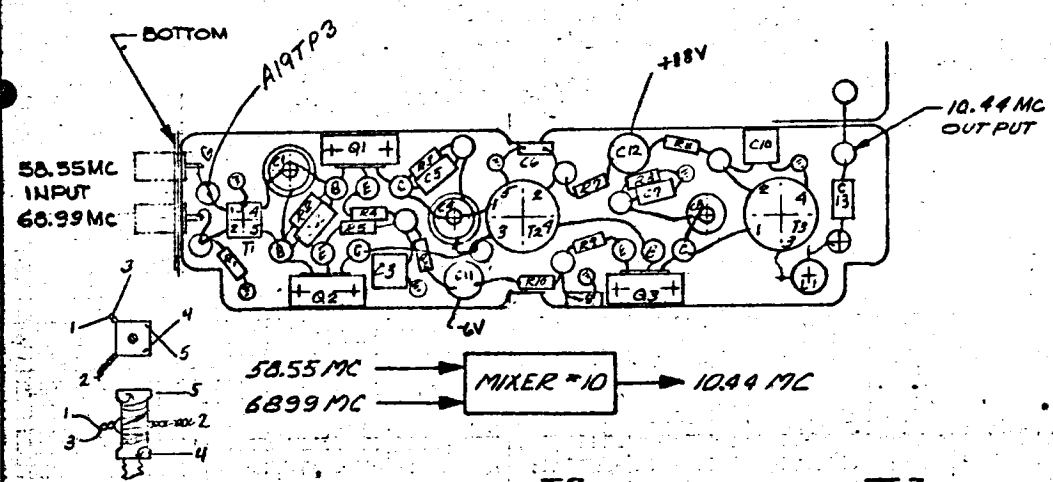

T1

PRIM 3T #20
SEC 9T C.T. #22 1/2 Lg
ON 1/4" COIL FORM

T2

PRIM 26T C.T. #22, 360°
SEC 3T #20, 360° SEC

T3

PRIM 26T, 360° #22
3T, 360° #20

SK | CHG LTR

NO. REQD	MFR OR STL PART NO.	MFR	DESCRIPTION	SYM
19			TERMINAL INSUL	
6		1280B/ET2069	TERMINAL GND	
2	27-9	AMPHENOL	CONNECTOR	
3			HEAT SINK TO-5	
3	2N2219	MOTOROLA	TRANSISTOR	Q1, Q2 & Q3
2	T50-2	MICRO METALS	TRANSFORMER	T2 & T3
1		STL	TRANSFORMER	T1
1	4308	MILLER	COIL	L1
1		CORNING	910 pf	C10
1	CYFM10C430J	CORNING	43 pf CAPACITOR	C13
2	FA5C-102W	ALLEN BRADLEY	.001 µf " FEED THRU	C11 & C12
1	CYFM10C390J	CORNING	39 pf ① 43 pf ②	C7
1	CYFM10C470J	CORNING	47 pf "	C5
43	VF306CW103K	VITRAMON	.01 µf "	C3, C6 C9
1	CYFM10C240J	CORNING	24 pf "	C2
3	JMC2950	JOHANSON	"	C1, C4 & C8
1			3K RESISTOR 1/4 W	R10
1			220Ω " "	R9
1			10K " "	R8
1			5.1K " "	R6
4			100Ω " "	R4, R5 R7 & R11
1			12K " "	R3
1			1.8K " "	R2
1			51Ω " "	R1

ORIGINATOR I. HARRIS | DATE 10-2-63 | TITLE MIXER 10.44 MHZ

MJO 4126-01-01

ENGINEERING SKETCH
SPACE TECHNOLOGY LABORATORIES, INC.
LOS ANGELES, CALIFORNIA

SK A-11600-4

SHEET OF

STL Form 523B (Rev. 2-59)

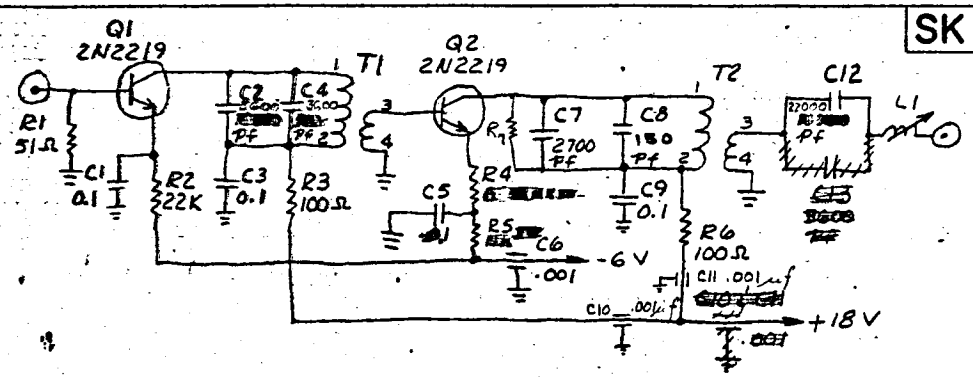

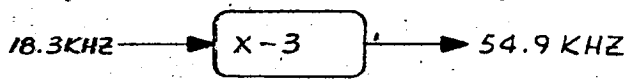

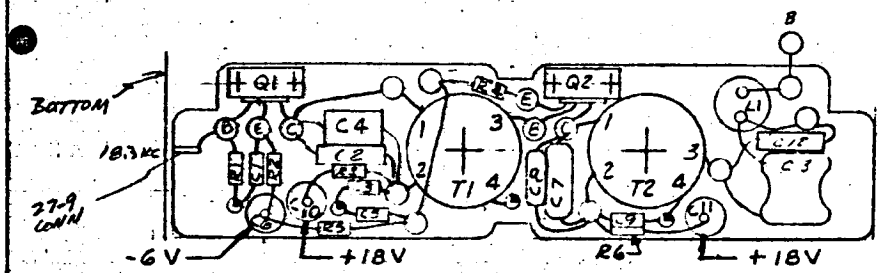

T1	T2
PRIM 400 T #30	PRIM 400 T #34
SEC 100 T #30	SEC 25 T #34

SK

NO REQD	MFR OR STL PART NO	MFR	DESCRIPTION	SYM
13			TERMINAL INSUL	
4	1280B/ET2064	USECO/STL	TERMINAL GRD	
2	A11022	STL	HEAT SINK TO-5	
2	2N2219	MOTOROLA	TRANSISTOR	Q1, Q2
1			2K RESISTOR	R8
1	T80-3	MICRO METALS	TRANSFORMER	T2
1	T80-2	MICRO METALS	TRANSFORMER	T1
1	VY31C[redacted]J	VITRAMON	5600 Pf ① 9100 Pf ②	C2
1	1505-10	CAMBION	COIL VARIBLE SHIELDED	L1
1	SILVER MICA	ELMENCO	22000 Pf CAPACITOR	C12
1	HRDM-19-362J	ELMENCO	3600 Pf ① CAPACITOR NONE ②	[redacted] C4
1	HRDM-15-300J	ELMENCO	150 Pf	C8
1	HRDM-19-272J	ELMENCO	2700 Pf	C7
3	FA5C-102W	ALLEN BRADLY	.001 Mf FEED THRU	C6, C10 C11
1	[redacted]	[redacted]	[redacted] NONE ① 27K ②	[redacted] R7
~~2~~	~~[redacted]~~	~~[redacted]~~	~~10000 Pf~~	~~C2, C12~~
4	150D104X5035A2	SPRAGUE	0.1 Mf CAPACITOR	C1, C3 C5 & C9
1			27K RESISTOR 1/4 W	R7
1			3.6K ① [redacted] RESISTOR 3K② 1/4 W	R5
1			[redacted] 430Ω ① 360Ω ②	R4
2			100 Ω	R3, R6
1			22 K	R2
1			51 Ω RESISTOR 1/4 W	R1

ORIGINATOR G. Johnson	DATE 10-3-63	TITLE X 3 MUL. 54.9 KHZ	ENGINEERING SKETCH SPACE TECHNOLOGY LABORATORIES, INC. LOS ANGELES, CALIFORNIA
MJO 4126-01-01			SK A-11501-1 SHEET OF

STL Form 5238 (Rev. 2-59)

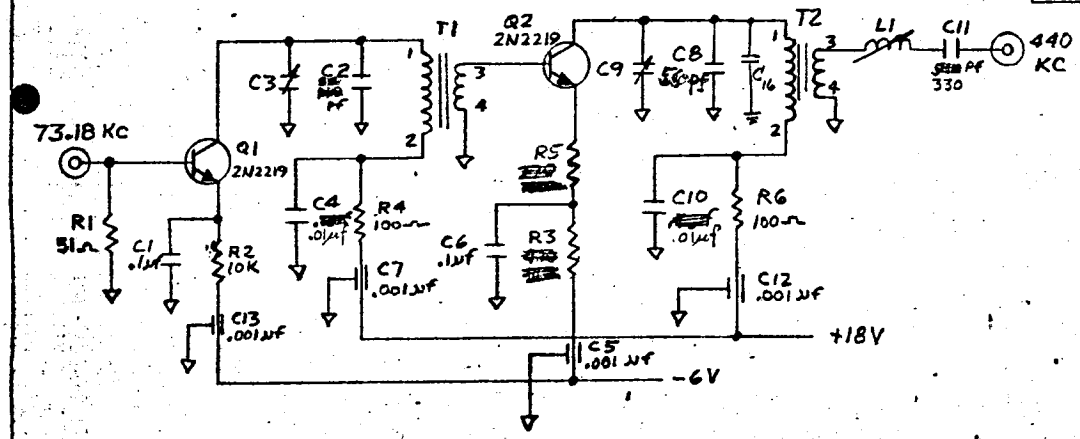

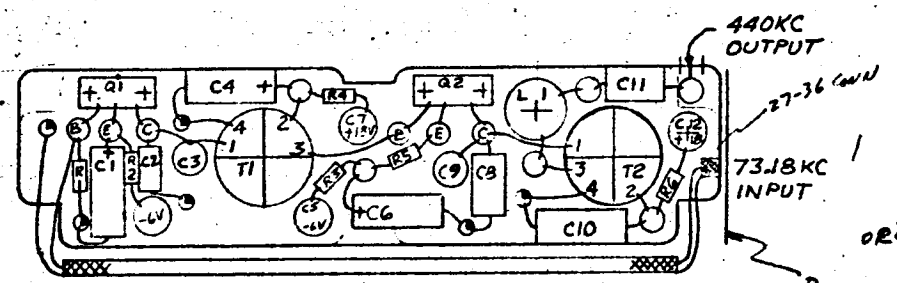

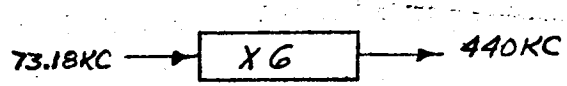

T1
PRI. 200T #30
SEC. 25T #26

T2
PRI. 100T #30
SEC. 6T #26

SK

NO. REQD	MFR OR STL PART NO.	MFR	DESCRIPTION	SYM
12	4073-062	LERCO	INSUL. TERMINALS	
6	ET2064	STL	GROUND TERMINALS	
2	TO-5		HEAT SINK, BORON NITRITE	
2	2N2219	MOTOROLA	TRANSISTOR	Q1, Q2
2	T68-3	MICRO METALS	TRANSFORMER	T1, T2
1	1505 ~~4315~~ 10	CAMBION ~~MILLER~~	~~INDUCTOR~~ COIL, VARIABLE SHIELDED	L1
1			none ① 75Pf N5250 ②	C_{16}
1		CORNING	30 Pf CAPACITOR	C13
1	CYFM15C 331 J	CORNING	330 Pf CAPACITOR	C11
1	CYFM15C 561 J	CORNING	560 Pf CAPACITOR	C8
4	5A5C	ALLEN-BRADLEY	.001 μf CAPACITOR, FEED-THRU	C5, 7, 12, 13
2	JMC 2950	JOHANSON	CAPACITOR, VARIABLE	C3, C9
1	CYFM10C 610 J	~~CORNING~~	62Pf CAPACITOR ① CORNING 75Pf N5250 ②	C2
42	MC80V104AK	AEROVOX	.1 μf CAPACITOR	C1, 3, 6, 10
OR 42	150D104X9035A2	SPRAGUE	.1 μf CAPACITOR	C1, 3, 6, 10
2	VK306CW103K	VITRAMON	.01 μf CAPACITOR	C4 & C10
1		150Ω	① RESISTOR 620Ω ②	R5
2			100Ω	R4, R6
1			1.6K ① 1.8K ②	R3
1			10K	R2
1			51Ω RESISTOR	R1

ORIGINATOR: L. L. FREED
DATE: 10-14-3
TITLE: X6 MUL. 440 KHZ
MJO

ENGINEERING SKETCH
SPACE TECHNOLOGY LABORATORIES, INC.
LOS ANGELES, CALIFORNIA
SK A-11601-2
SHEET OF

STL Form 523B (Rev. 2-59)

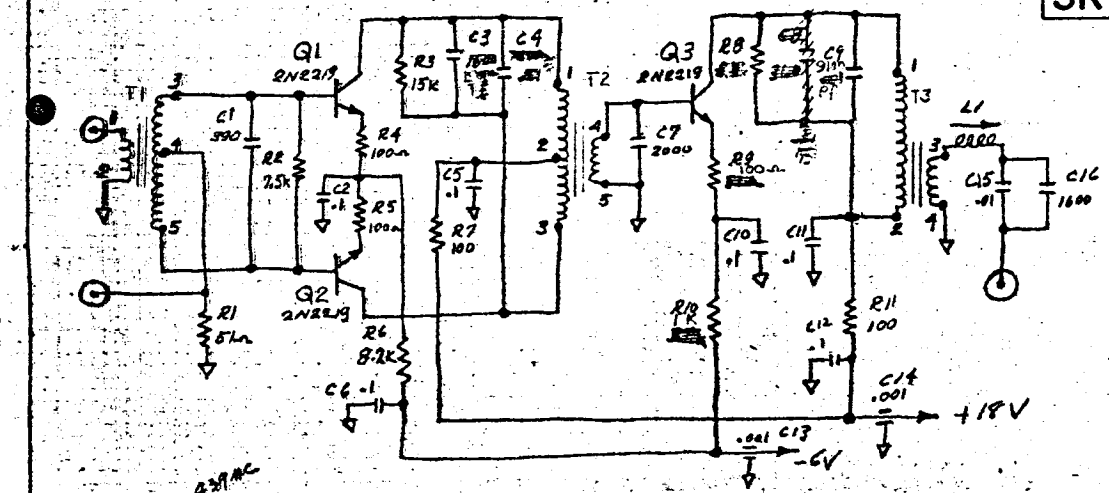

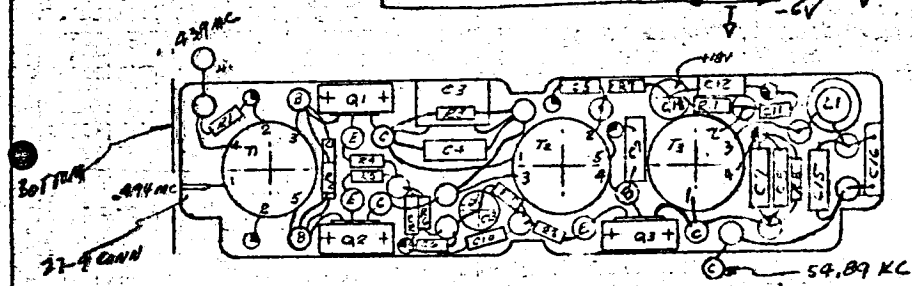

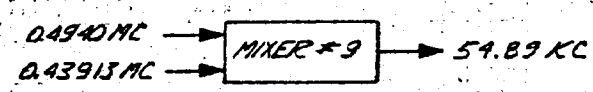

T1	T2	T3
PRIM 20T #26	PRIM 400T CT #34	PRIM 400T #34
SEC. 200T CT. #28	SEC 40T #30	SEC 40T #30

SK

NO. REQD	MFR OR STL PART NO.	MFR	DESCRIPTION	SYM
19			TERMINAL INSUL	
6	1280B/ET206A		TERMINAL GND	
3	A-11022	STL	HEAT SINK	
1		CORNING	.01μf CAPACITOR	C15
3	2N2219	MOTORLA	TRANSISTOR	Q1, Q2 & Q3
1		ELMENCO	1800 Pf ① CAPACITOR NONE ②	C3
3	T68-2	MICRO METALS	TRANSFORMER	T1, T2 & T3
1		ELMENCO	7500 Pf ① CAPACITOR 9100 Pf ②	C4
1	1505-10	CAMBION	COIL	L1
1		CORNING	9100 Pf CAPACITOR	C9
2	FA5C-102W	ALLEN BRADLEY	.001μf CAPACITOR FEED THRO	C13 & C14
~~1~~	~~CYFM15C361J~~	~~CORNING~~	~~360 Pf~~	~~C8~~
1	HRDM-19-202J	ELMENCO	2000 Pf "	C7
~~3~~	~~MC80V103AK~~	~~AEROVOX~~	~~.01 μf~~	~~C4, C8 & C15~~
1	HRDM-19-162J	ELMENCO	1600 Pf "	C16
6	150D104X5035A2	SPRAGUE	.1 μf "	C2, C5, C6, C10, C11 & C12
1	CYFM15C391J	CORNING	390 Pf "	C1
1			6.8K ① RESISTOR 1/4 W 15K ②	R8
1			1K RESISTOR 1/4 W	R10
1			8.2K " "	R6
5			100Ω " " R9,	R4, R5, R7 & R11
2			15K " "	R3
1			7.5K " "	R2
2			51Ω " "	R1

ORIGINATOR I. HARRIS
DATE 10-7-63
TITLE MIXER 54.89 KHZ
MJO 4126-01-01

ENGINEERING SKETCH
SPACE TECHNOLOGY LABORATORIES, INC.
LOS ANGELES, CALIFORNIA
SK A-11601-3
SHEET OF

STL Form 523B (Rev. 2-59)

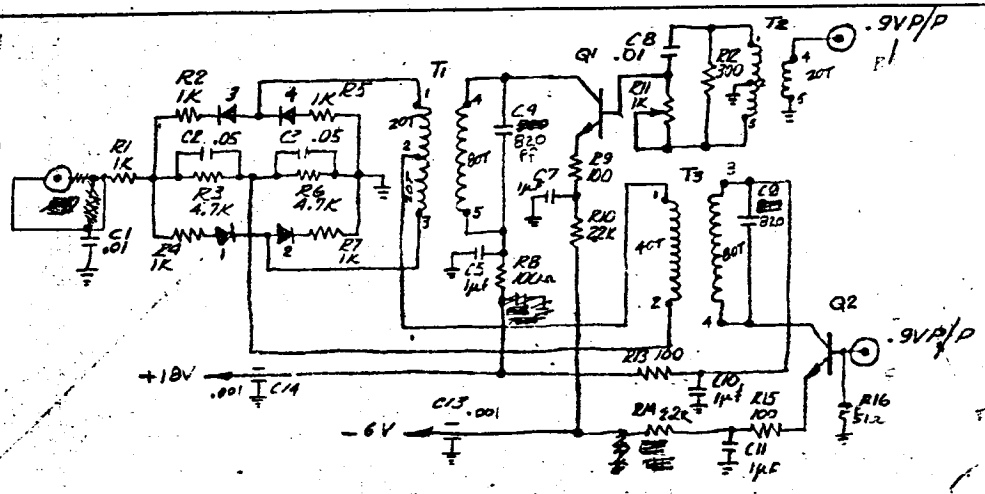

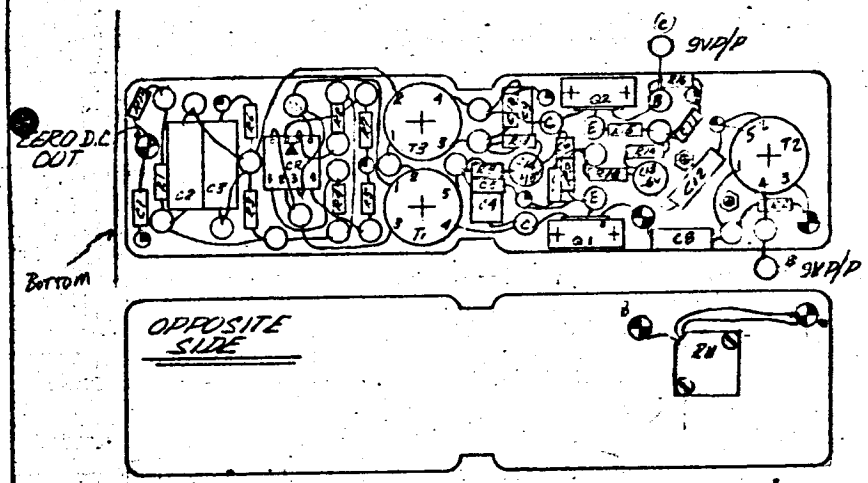

NOTE: WIND 1/4" TEFLON TAPE AROUND CORE BEFORE INSTALLING WIRE

T1	T2	T3
PRIM 80T #28	PRIM 20T #24	PRIM 80T #28
SEC 40T C.T. #26	SEC 40T C.T. #26	SEC 40T #26

SK [illegible] CHG LTR

NO. REQ'D	MFR OR STL PART NO.	MFR	DESCRIPTION	SYM
2			TERMINAL INSUL FEED THRU	⊕
27			TERMINAL INSUL	○
9	1280B ET206A	STL	TERMINAL GND	◔
1	FA4000	FAIRCHILD QUAD	DIODE — 1-2-3-4	CR
2	2N2219	MOTOROLA	TRANSISTOR	Q1 & Q2
3	0-3	GENERAL CERAMICS	TRANSFORMER CORE	T1, T2 & T3
1		AEROVOX	.01µf CAPACITOR	C1
2	FA5C-102W	ALLEN BRADLEY	.001µf CAPACITOR FEEDTHRU	C13 & C14
2	CYFM15C821J	CORNING	820 pf "	C4, C9
1	MC80V103AK	~~AEROVOX~~ CORNING	.01µf "	C8
~~2~~	~~[illegible]~~	~~SPRAGUE~~	~~10µf~~ "	~~C6 & C12~~
5	150D104X535A2	SPRAGUE	.1µf "	C5, C7, C10 & C11
~~1~~	~~CYFM15C56N~~	~~CORNING~~	~~560 pf~~ "	~~C4~~
2	MC80V503AK	AEROVOX	.05µf "	C2 & C3
2			2.2K RESISTOR 1/4W 5%	R10, R14
1			51Ω RESISTOR 1/4W 5%	R16
1			300Ω RESISTOR 1/4W 5%	R2
1	300-66N-1000	DAYSTROM PACIFIC	1K " ADJ.	R11
~~1~~			~~22K~~ "	~~R10~~
4			100Ω "	R8, R9, R13 & R15
2			4.7K "	R3 & R6
5			1K "	R1, R2, R4, R5 & R7

ORIGINATOR	DATE	TITLE	
I. HARRIS	10-28-63	54KC ϕ DETECTOR	ENGINEERING SKETCH SPACE TECHNOLOGY LABORATORIES, INC. LOS ANGELES, CALIFORNIA
4			SK A-11601-4
MJO 4126-01-01			SHEET OF

STL Form 523B (Rev. 2-59)

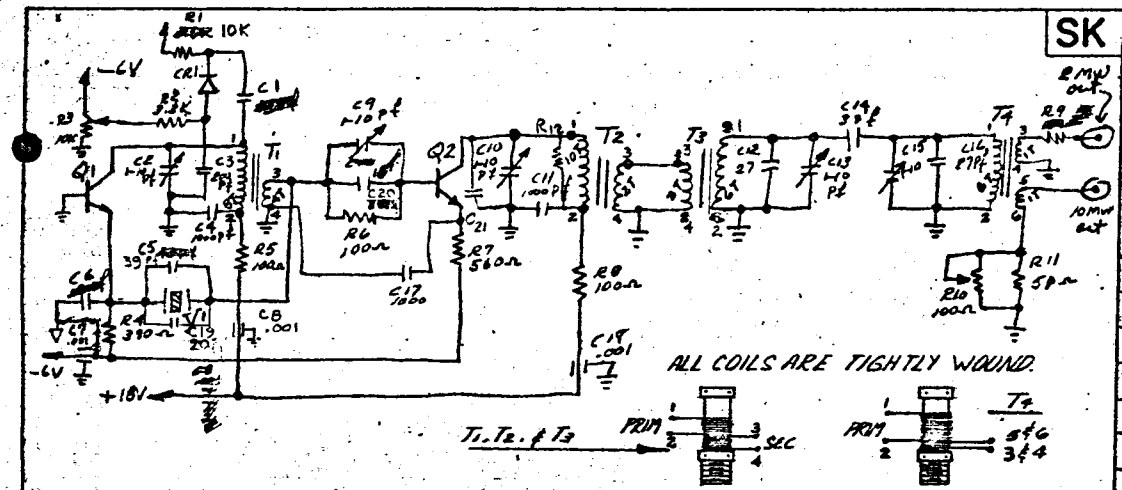

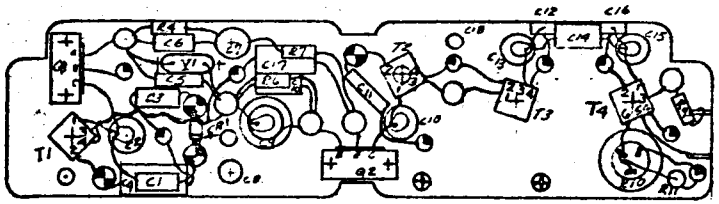

BOTTOM

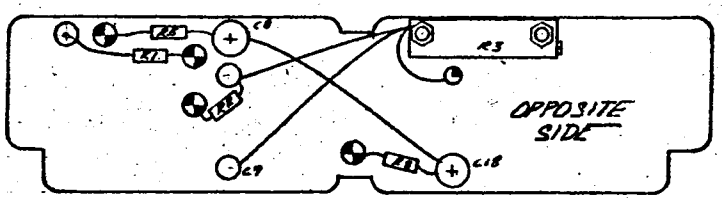

T1	T2	T3	T4
PRIM 8T #24	PRIM 10T #24	PRIM 2T #24	PRIM 6T #24
SEC 4T #24	SEC 2T #24	SEC 6T #24	SEC 1T #24
			THIRD 1T #24

SK

NO REQD	MFR 2nd STL PART NO.	MFR	DESCRIPTION	SYM
1			NONE ① 5pf ②	C21
1		CHG LTR	NONE ① 1.2K ②	R12
1	CYFM10C200J	CORNING	20 pf CAPACITOR	C19
4			TERMINAL INSUL FEED THRU	
8			TERMINAL INSUL	
9	1280B/ET206A	STL	TERMINAL GND	
4	A-11021	STL	COIL FORM	T1, 2, 3, 4
2	A-11022	STL	HEAT SINK	
2	2N2219	MOTORLA	TRANSISTOR	Q1 & Q2
1	JF-H3W	JAMES KNIGHT	CRYSTAL 68.997515 MC	Y1
1	V-27	PSI	DIODE VARICAP	CR1
1	CYFM10C270J	CORNING	27 Pf CAPACITOR	C16
1	CY12C3R0	VITRAMAN	3 Pf "	C14
1	CYFM10C271J	CORNING	27 Pf "	C12
1	CYFM10C330J	CORNING	33 Pf ① " NONE ②	C20
3	FA5C-102W	ALLEN BRADLEY	.001 µf " FEED THRU	C7, C8, C18
1	CYFM10C680J	CORNING	68 Pf ① " 100 pf ②	C6
1	CYFM10C390J	CORNING	39 Pf "	C5
3	CYFM15C102J	CORNING	1000 Pf "	C4, C11 & C17
1	CYFM10C201J	CORNING	200 Pf "	C3
5	2950	JOHANSON	1-10 " ADJ	C2, C9, C10, C13 & C15
1	[illegible]	[illegible]	39 Pf N3300 ① " 39 pf N1500 ②	C1
1			50 Ω RESISTOR 1/4 W 5%	R11
1	AS3601	OHMITE	100 Ω " ADJ	R10
1			43 Ω ① 68 Ω ②	R9
1			560 Ω "	R7
3			100 Ω "	R5, R6 & R8
1			390 Ω "	R4
1	236L	BOURNS	10K " ADJ	R3
1			3.3K "	R2
1			10K "	R1

ORIGINATOR	DATE	TITLE	
I. HARRIS	11-1-63	68.997515MC VCO	ENGINEERING SKETCH SPACE TECHNOLOGY LABORATORIES, INC. LOS ANGELES, CALIFORNIA
MJO 4126-01-01			SK A-11601-5
			SHEET OF

STL Form 523B (Rev. 2-59)

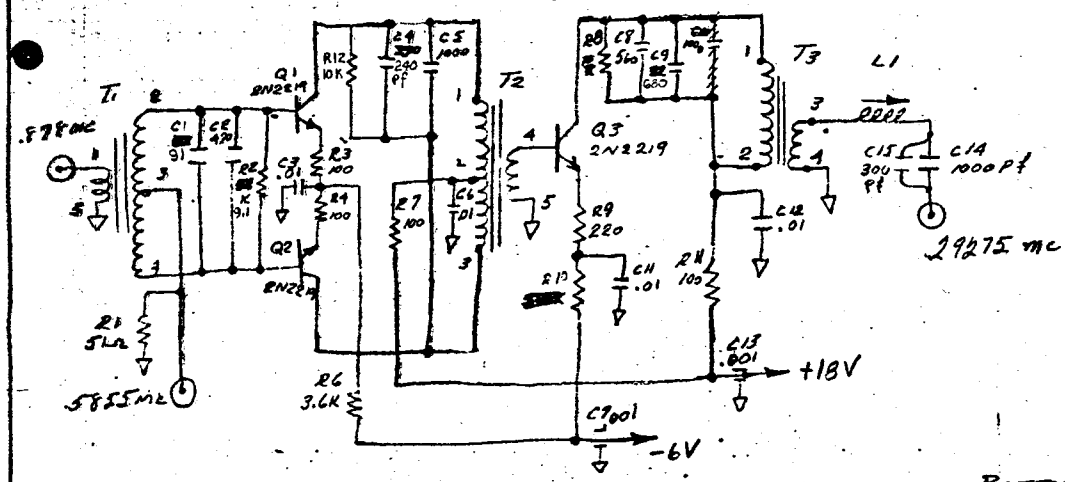

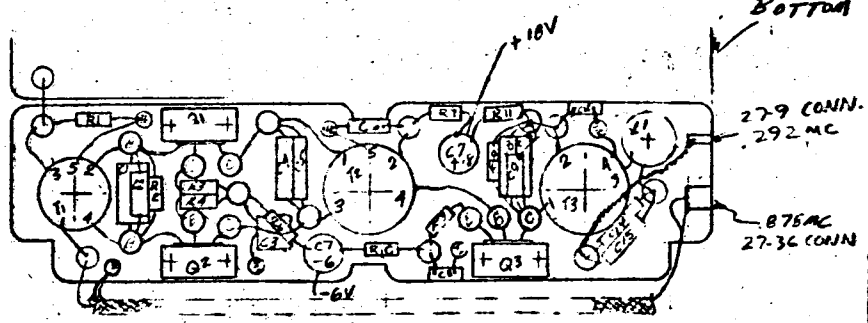

.878 MC →
.5855 MC →
MIXER #5 → .29275

T1	T2	T3
PRIM 10 T #26	PRIM 200 T C.T. #30	PRIM 200 T #30
SEC 100 T C.T. #28	SEC 20 T #28	SEC 13 T #28

SK

NO. REQD	MFR OR STL PART NO.	MFR	DESCRIPTION	SYM
			CHG LTR	
17			TERMINAL INSUL	
7		12808/ET2069	TERMINAL GND	
1	27-36	AMPHENOL	CONNECTOR	
1	27-9	AMPHENOL	CONNECTOR	
1	T50-2	MICRO METALS	TRANSFORMER	T1
2	T68-2	" "	"	T2, T3
3	2N2219	MOTOROLA	TRANSISTOR	Q1, Q2 & Q3
1	4315	MILLER	COIL	L1
1			10K RESISTOR 1/4W	R12
1	CYFM15C301J	CORNING	300 PF CAPACITOR	C15
1	CYFM10C681J	CORNING	680 PF "	C9
1	CYFM15C561J	CORNING	560 PF "	C8
2	FA5C-102W	ALLEN BRADLEY	.001 μF " FEED THRU	C7 & C13
2	CYFM15C102J	CORNING	1000 PF "	C5 & C14
1	CYFM15C241J	CORNING	240 PF "	C4
4	VK206CW103J	VITRAMON	.01 μF "	C3, C6, C11 & C12
1	CYFM15C471J	CORNING	470 PF "	C2
1	CYFM10C910J	CORNING	91 PF "	C1
1			9.1 K RESISTOR 1/4W	R2
1			51Ω RESISTOR 1/4 W	R1
1			220Ω " "	R9
1			3.6 K " "	R6
1			" S/N1 6.2K S/N2 8.2K "	R8
4			100Ω " "	R3, R4, R7 & R11
1			" S/N1 2.4K S/N2 2.2K "	R10

ORIGINATOR J HARRIS | DATE 12-5 | TITLE MIXER • 29275 MHZ

MJO 4126-01-01

ENGINEERING SKETCH
SPACE TECHNOLOGY LABORATORIES, INC.
LOS ANGELES, CALIFORNIA

SK A-11700-1

SHEET OF

STL Form 5238 (Rev 2-59)

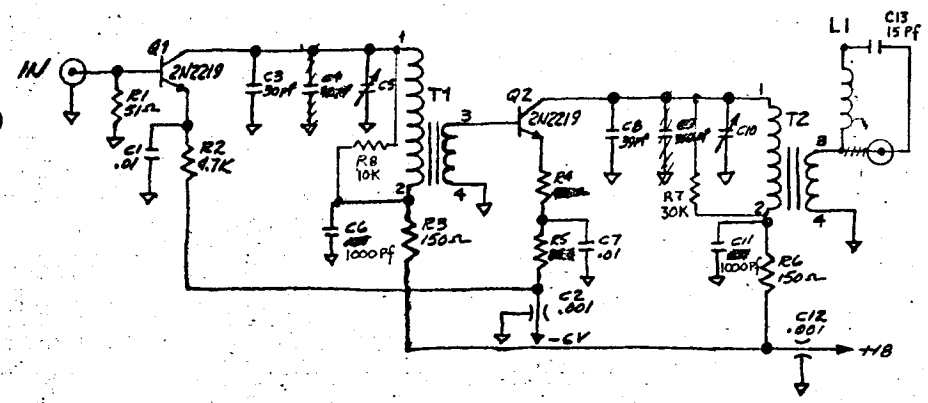

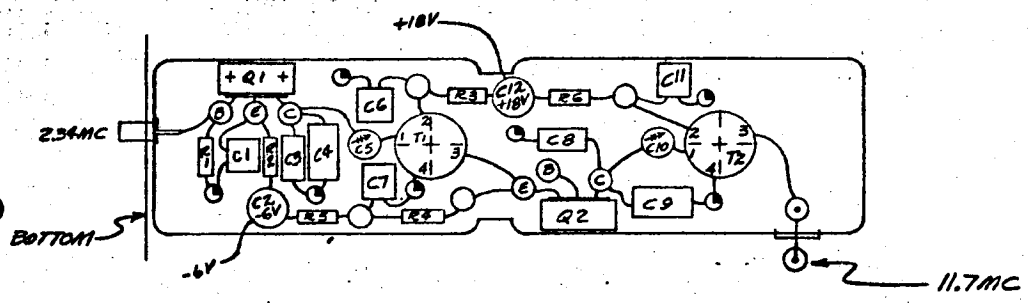

2.34MC → X5 → 11.7MC

T1		T2	
PRIM	25T #30	PRIM	25T #30
SEC	5T #28	SEC	2T #28

SK A-11700-2 CHG LTR

NO. REQD	MFR OR STL PART NO.	MFR	DESCRIPTION	SYM
12			TERMINAL INSUL	○
7	12B0B-ET2064	STL	TERMINAL GND	◔
1	4309	MILLER	COIL	L1
2	T50-2	MICRO METALS	TRANSFORMER	T1 & T2
1		CORNING	15 Pf CAPACITOR	C13
2	2N2219	MOTOROLA	TRANSISTOR	Q1 & Q2
2	CY 17C 102	VITRAMON	1000 Pf CAPACITOR	C6 & C11
	AMPHENOL 279		CONNECTOR	
1			10 K RESISTOR 1/4W	R8
2	FA5C-102W	(A.B.)	.001 CAPACITOR (FEED THRU)	C2 & C12
4	VK30CW103K	VITRAMON	.01	C1, [redacted] C7 & [redacted]
2	JOHANSON	JMC 2950	VARIABLE	C5 & C10
1	CYFM10C390J	CORNING	39 pf	C8
2	CYFM10C911J	CORNING	910 pf	C4 & C9
1	CYFM10C300J	CORNING	30 pf CAPACITOR	C3
1			30 K RESISTOR 1/4W	R7
1			51 Ω RESISTOR 1/4W ±5%	R1
1			4.7K	R2
2			150 Ω	R3 & R6
1			[redacted] S/N1 135 Ω S/N2 200 Ω	R4
1			S/N1 [redacted] 6.2K S/N2 2.7K RESISTOR 1/4W ±5%	R5

ORIGINATOR	DATE	TITLE	ENGINEERING SKETCH
LARRY PRICE	12/9/63	X5 MUL 11.7 MHZ	SPACE TECHNOLOGY LABORATORIES, INC. LOS ANGELES, CALIFORNIA
MJO			SK A-11700-2
			SHEET OF

STL Form 5238 (Rev. 2-59)

SK | CHG LTR

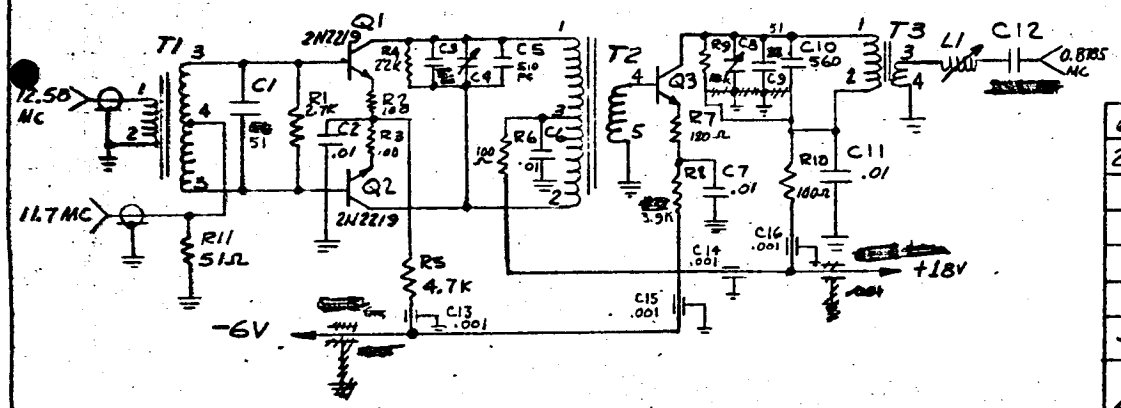

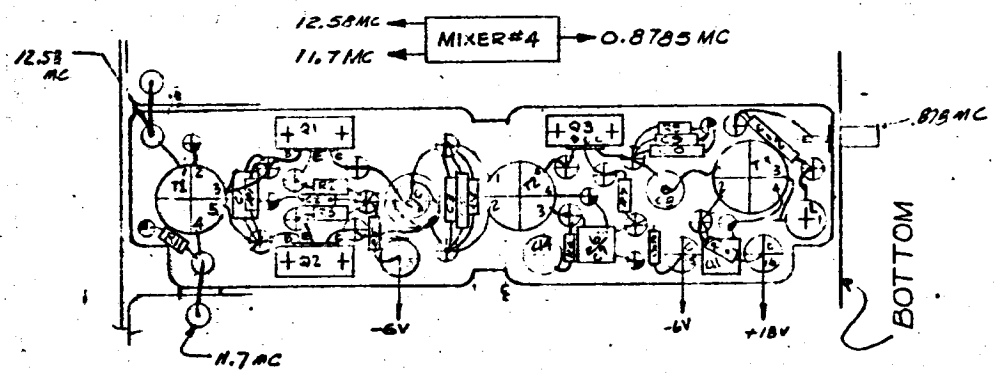

6	12BQ8/ET2069	USECO/STL	GRD TERMINAL	
20			INSULATED TERMINALS	
1	27-9	AMPHENOL	CONNECTOR	
1	4313	MILLER	INDUCTOR	
3	2N2219	MOTOROLA	TRANSISTOR	Q1, Q2 Q3
3	T50-2	MICRO METALS	TRANSFORMER	T1, T2 & T3
1	CYFM15C[redacted]J	CORNING	[redacted] S/N1 360 pf S/N2 510 pf CAPACITOR	C12
4	FA5C-102W	ALLEN BRADLEY	.001 µf FEED-THRU CAPACITOR	C13, C14 C15, C16
1	CYFM15C561J	CORNING	560 PF	C10
~~1~~	~~CYFM15C270J~~	~~CORNING~~	~~27 PF~~	~~C9~~
1	CYFM15C511J	CORNING	510 PF	C5
2	JMC2950	JOHANSON	.8-10 PF	C4 & C8
1	CYFM10C[redacted]J	CORNING	[redacted] S/N1 15 pf S/N2 36 pf	C3
4	NK306CW103K	VITRAMON	.01 µf	C2, C6, C7 & C11
~~1~~ 2	CYFM10C540J	CORNING	[redacted] 51 pf CAPACITOR	C1, C9
1			51 Ω 1/4 W ± 5% RESISTOR	R11
1			[redacted] 1/4 W ± 5% S/N1 7.5K S/N2 10K	R9
1			[redacted] 1/4 W ± 5% S/N1 3.9K S/N2 2.7K	R8
1			180 Ω 1/4 W ± 5%	R7
1			4.7K 1/4 W ± 5%	R5
1			22K 1/4 W ± 5%	R4
4			100 Ω 1/4 W ± 5%	R2, R3, R6 & R10
1			2.7K 1/4 ± 5% RESISTOR	R1
NO. REQD	MFG OR STL PART NO.	MFG	DESCRIPTION	REF DESIG

T1
PRIM = 20T C.T. #26
SEC = 4T #24

T2
PRIM = 100T C.T. #28
SEC = 10T #26

T3
PRIM = 100T #28
SEC = 6T #26

ORIGINATOR D.S. Anderson	DATE 10-3-63	TITLE MIXER .8785 MHZ	ENGINEERING SKETCH SPACE TECHNOLOGY LABORATORIES, INC. LOS ANGELES, CALIFORNIA
			SK A-11700-3
MJO 4126-01-01			SHEET 1 OF 1

STL Form 5238 (Rev. 2-59)

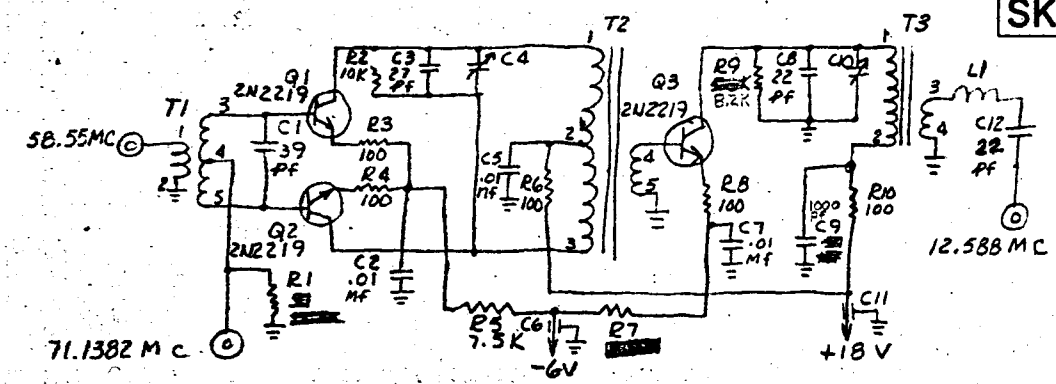

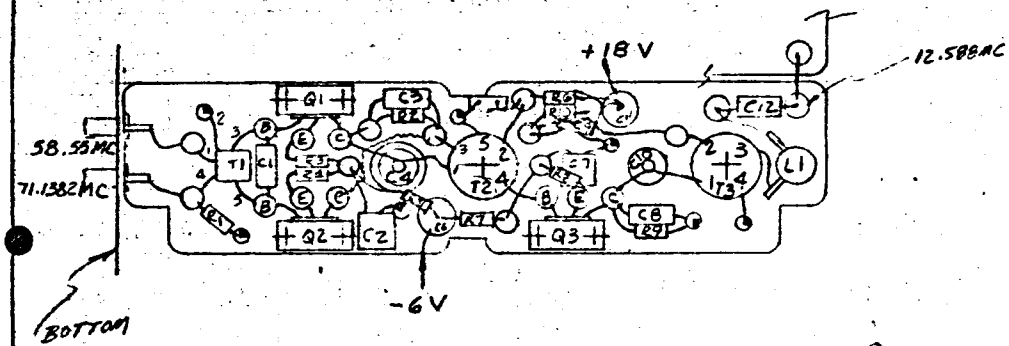

58.55MC
71.1382 MC → MIXER #11 → 12.588MC

	T1	T2	T3
PRIM	3T #22	PRIM 26 T C.T. #22	PRIM 26 T #22
SEC	7T C.T. #24	SEC 3 T #20	SEC 3T #20
	1/2 LG ON 1/4 COIL FORM		

SK

NO. REQD	MFR OR STL PART NO	MFR	DESCRIPTION	SYM
2	A11023	STL	BUSHING INSUL	
2	27-9	AMPHENOL	CONNECTOR	
22			TERMINAL INSUL	
6	1280B/ET2064	USECO/STL	TERMINAL GRD	
3	A11022	STL	HEAT SINK TO-5	
2	T50-2	MICRO METALS	TRANSFORMER	T2 & T3
1	A11021	STL	TRANSFORMER - COIL FORM	T1
1	430B	MILLER	COIL	L1
3	2N2219	MOTOROLA	TRANSISTOR	Q1, Q2 & Q3
1	CY 1TC 102	VITRAMON	1000 Pf CAPACITOR	C9
2	CYFM10C220J	CORNING	22 Pf CAPACITOR	C8 & C12
2	FASC-102W	ALLEN BRADLEY	.001 MF FEED THRU	C6 & C11
2	JMC 2950	JOHANSON	8 TO 10 Pf	C4 & C10
1	CYFM10C270J	CORNING	27 Pf	C3
3	VF306CW103K	VITRAMON	.01 MF	C2, C5, C7
1	CYFM10C390J	CORNING	39 Pf CAPACITOR	C1
1		S/N1 8.2K S/N2 10K	RESISTOR 1/4 W	R9
1			S/N1 3.9K S/N2 2K	R7
1			7.5 K	R5
5			100 Ω	R3, R4, R6, R8 & R10
1			10 K	R2
1		S/N1 180Ω S/N2 100Ω	RESISTOR 1/4 W	R1

ORIGINATOR A Nance
DATE 10-2-63
TITLE MIXER 12.588 MHZ
MJO

ENGINEERING SKETCH
SPACE TECHNOLOGY LABORATORIES, INC.
LOS ANGELES, CALIFORNIA
SK A-11700-4
SHEET OF

STL Form 5238 (Rev. 2-59)

SK | CHG LTR

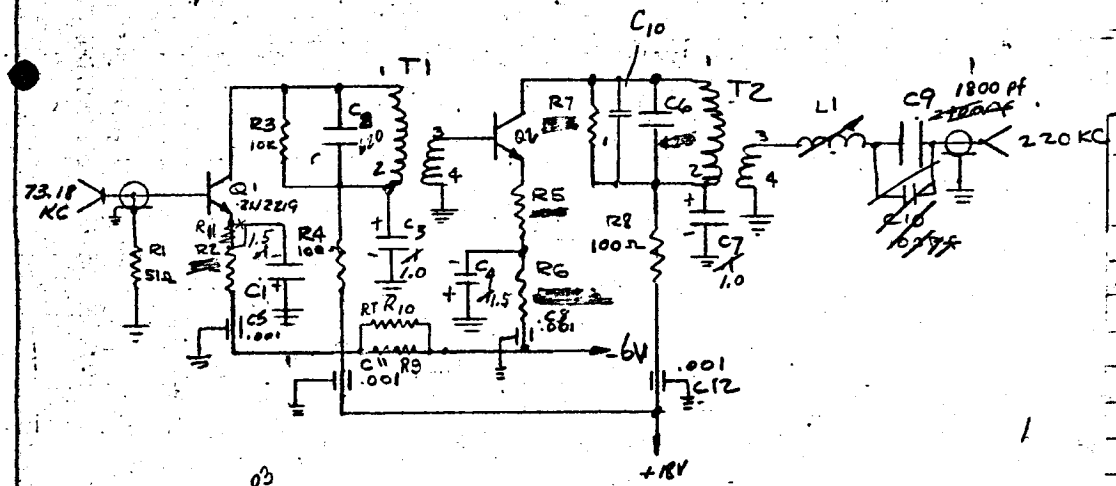

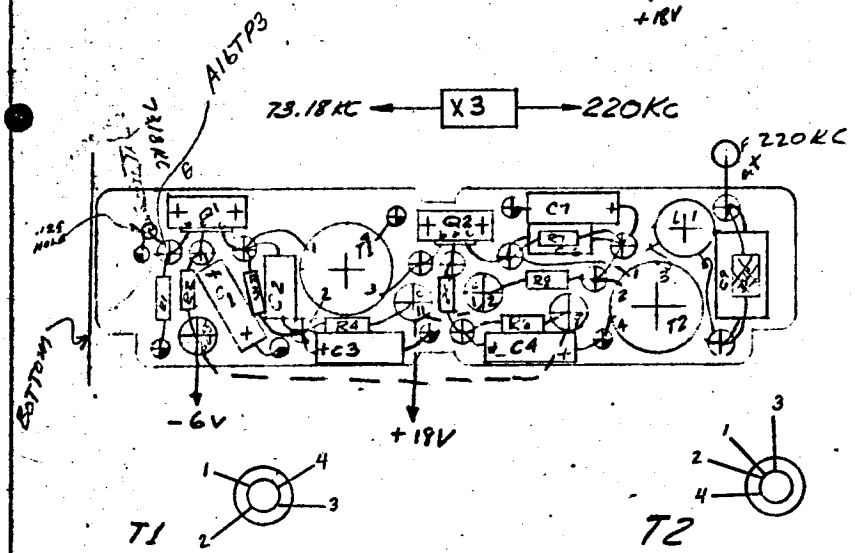

PRIM = 200 T NO. 30, RD & RD PRIM = 200 T NO. 30, RD & RD

SEC = 8 T NO. 28, 360° SEC = 8 T NO. 28, 360°

NO. REQD	MFG OR STL PART NO.	MFG	DESCRIPTION	REF DESIG
		S/N1	3.9K 1/4 W. RESISTOR	R9
1		S/N2	6.2K	
1		S/N1	GLENNITE 3GRR1 THERMISTOR	R10
		S/N2	0 Ω	
2	150D155X9020A2	SPRAGUE	CAPACITOR 1.5μf 20 VDC	C1 & C4
7	ET 2064	STL	TERMINAL GRD	
12	4073-062	ZERCO	TERMINAL INSULATED	
2	A-11022	STL	HEAT SINK (TO-5 CASE)	
1			S/N1 0 Ω	R11
			S/N2 62 Ω	
1	4315	MILLER	INDUCTOR	L1
2	T68-3	MICROMETALS	COIL FORM	T1 & T2
1		CORNING	S/N1 62pf	C10
			S/N2 100 pf	
2	2N2219		TRANSISTOR	Q1 & Q2
1		CORNING	S/N1 510 pf	C6
			S/N2 430 pf	
~~1~~	~~CYF410G101J~~	~~CORNING~~	~~CAPACITOR 100 PF~~	~~C10~~
1	VY21C182J ~~CYF420C242J~~	VITRAMON ~~CORNING~~	1800 pf ~~2400 PF~~	C9
4	FA5C-102W	ALLEN BRADLEY	.001 μf FEED THRU	C11/C12 C5/C8
2	CYFM15C621J	CORNING	620 PF	C2 & C6
~~4~~	~~MC80V104A~~	~~ALCOVOX~~	~~CAPACITOR .1μf~~	~~C1, C3, C4 & C7~~
OR 4 2	150D104X9035A2 150D105X9035A2	SPRAGUE	CAPACITOR 1.0 μf 35 VDC	C3, C7
1			RESISTOR S/N1 13K S/N2 22K 1/4 W ± 5%	R7
1		S/N1	2.2K	R6
		S/N2	1.8K	
1		S/N1	270 Ω	R5
		S/N2	51 Ω	
2			100 Ω	R4/R8
1			10 K	R3
1		S/N1	2K	R2
		S/N2	0 Ω	
1			RESISTOR 51 Ω 1/4 W ± 5%	R1

ORIGINATOR	DATE	TITLE
D.S. Anderson	10-11-63	X3 MUL. 220 KHZ

MJO 412G-01-01

ENGINEERING SKETCH
SPACE TECHNOLOGY LABORATORIES, INC.
LOS ANGELES, CALIFORNIA

SK A-11701-1

SHEET 1 OF 1

STL Form 523B (Rev. 2-59)

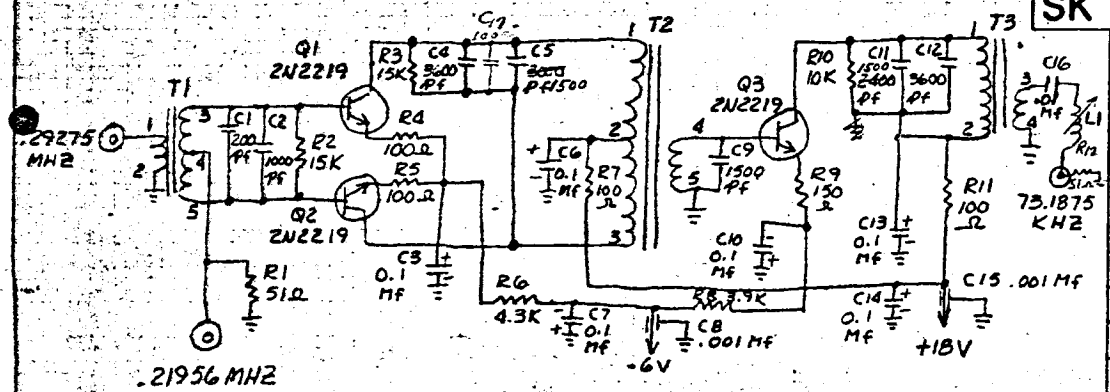

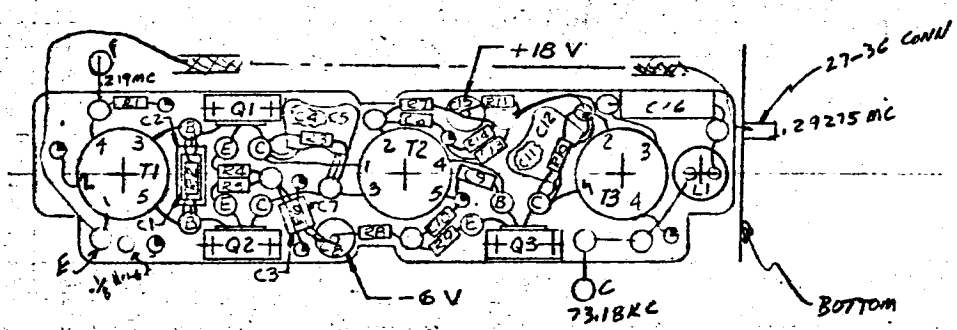

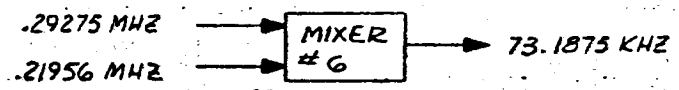

T1			T2			T3		
PRIM	15T	#28, 360°	PRIM	400 T C.T.	#34 RD/RD	PRIM	400 T	#34 RD/RD
SEC	200 T C.T.	#30 RD/RD (WIND HT)	SEC	40 T	#30, 360°	SEC	32 T	#30, 360°

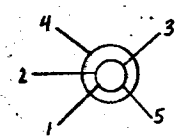

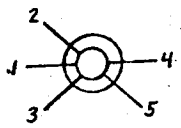

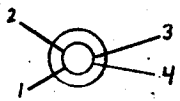

SK A-11701-2

NO REQD	MFR OR STL PART NO	MFR	DESCRIPTION	SYM
19/20			TERMINAL INSUL	
8/7	1280B/ET206A	USECO/STL	TERMINAL GRD	
3	T68-2	MICRO METALS	TRANSFORMER	T1, T2, T3
3	A11022	STL	HEAT SINK (TO-5)	
3	2N2219	MOTOROLA	TRANSISTOR	Q1, Q2 Q3
1	1505-10	CAMBION	COIL	L1
1	CYFM30C103J	CORNING	.01 Mf CAPACITOR	C16
~~1~~	~~HRDM-19-242J~~	~~ELMENCO~~	~~2400 pf~~	~~C11~~
1	VK306CW152K	VITRAMON	1500 pf	C9
2	FA5C-102W	ALLEN BRADLEY	.001 Mf FEED THRU	C8, C15
2	HRDM-19-382J	ELMENCO	~~3000 pf~~ 1500 pf	C5, C11
2	HRDM-19-362J	ELMENCO	3600 pf	C4, C12
6	150D104X5035A2	SPRAGUE	0.1 Mf	C3, C6, C7, C10, C13, C14
1	CYFM15C102J	CORNING	1000 pf	C2
1	CYFM10C201J	CORNING	200 pf CAPACITOR	C1
1	CYFM10C101J	CORNING	100 pf CAPACITOR	C17
1			10 K RESISTOR 1/4 W	R10
1			150 Ω	R9
1			3.9 K	R8
1			4.3 K	R6
4			100 Ω	R4, R5 R7, R11
2			15 K	R2, R3
2			51 Ω RESISTOR 1/4 W	R1, R12

ORIGINATOR A House
DATE 10-7-63
TITLE MIXER 73.1875 KHZ
MJO 4126-01-01

ENGINEERING SKETCH
SPACE TECHNOLOGY LABORATORIES, INC.
LOS ANGELES, CALIFORNIA
SK A-11701-2
SHEET OF

STL Form 523B (Rev. 2-59)

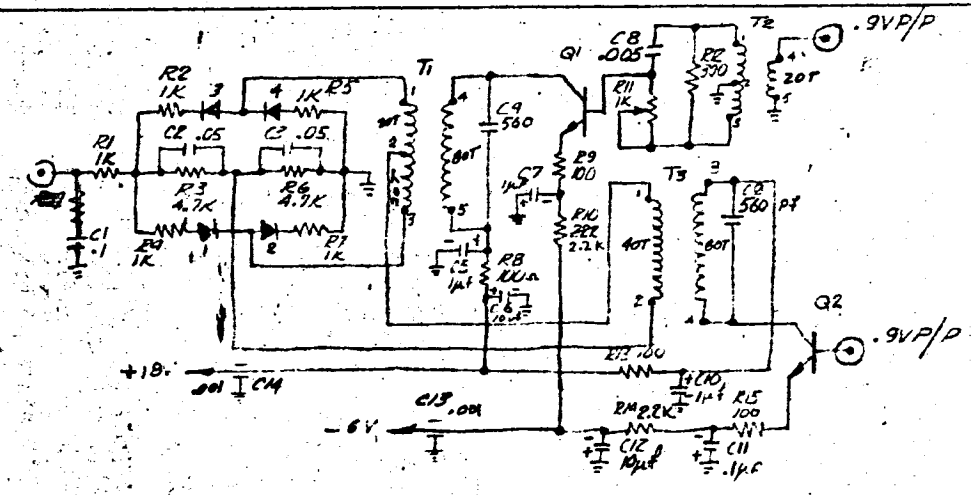

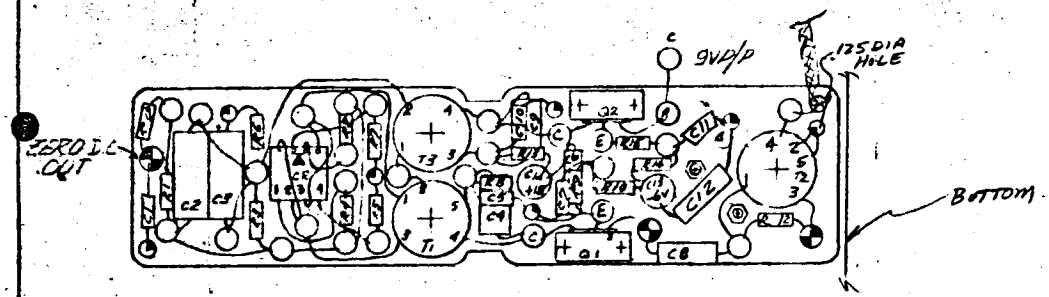

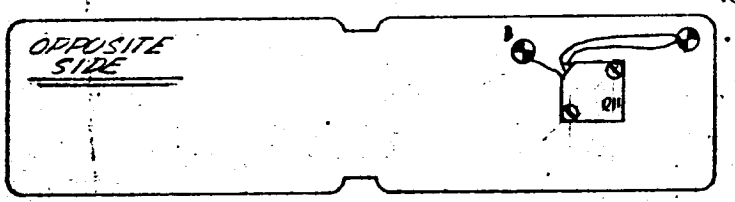

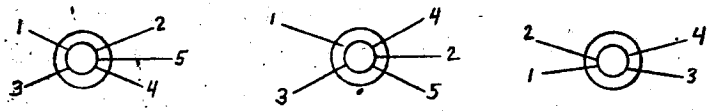

T1 360°
PRIM 80T #28
SEC 40T C.T. #26 360°

T2 360°
PRIM 20T #24
SEC 40T C.T. #26 360°

T3
PRIM 80T #28, 360°
SEC 40T #26, 360°

NOTE: WIND 1/4" TEFLON TAPE AROUND CORE BEFORE INSTALLING WIRE

SK 73KC

NO. REQ'D	MFR OR STL PART NO.	MFR	DESCRIPTION	SYM
				CHG LTR
2			TERMINAL INSUL FEED THRU	
27			TERMINAL INSUL	
9	1280B ET206A	STL	TERMINAL GND	
1	FA9000	FAIRCHILD QUAD	DIODE — 1-2-3-4	CR
2	2N2219	MOTOROLA	TRANSISTOR	Q1 & Q2
3	0-3	GENERAL CERAMICS	TRANSFORMER CORE	T1, T2 & T3
2	FA5C-102W	ALLEN BRADLEY	.001 CAPACITOR FEEDTHRU	C13 & C14
1			"	[illegible]
1	MCBCV502AK	ELMENCO ~~AEROVOX~~	.005 µf	C8
2	[illegible]	SPRAGUE	10 µf	C6 & C12
5	150D104X535A2	SPRAGUE	.1 µf "	C1, C5, C7, C10 & C11
2	CYFM15CE561J	CORNING	560 pf "	C4 & C9
2	MCBCV503AK	AEROVOX	.05 µf "	C2 & C3
1			2.2K RESISTOR 1/4 W 5%	R14
1			300Ω RESISTOR 1/4 W 5%	R2
1	300-66W-1000	DAYSTROM PACIFIC	1K " ADJ.	R11
1			22K "	R10
4			100Ω "	R8, R9, R13 & R15
2			4.7K "	R3 & R6
5			1K "	R1, R2, R4, R5 & R7

ORIGINATOR I. HARRIS
DATE 10-28-63
TITLE 73KC φ DETECTOR
MJO 4126-01-01

ENGINEERING SKETCH
SPACE TECHNOLOGY LABORATORIES, INC.
LOS ANGELES, CALIFORNIA
SK A11701-3
SHEET OF

STL Form 6738 (Rev. 2-59)

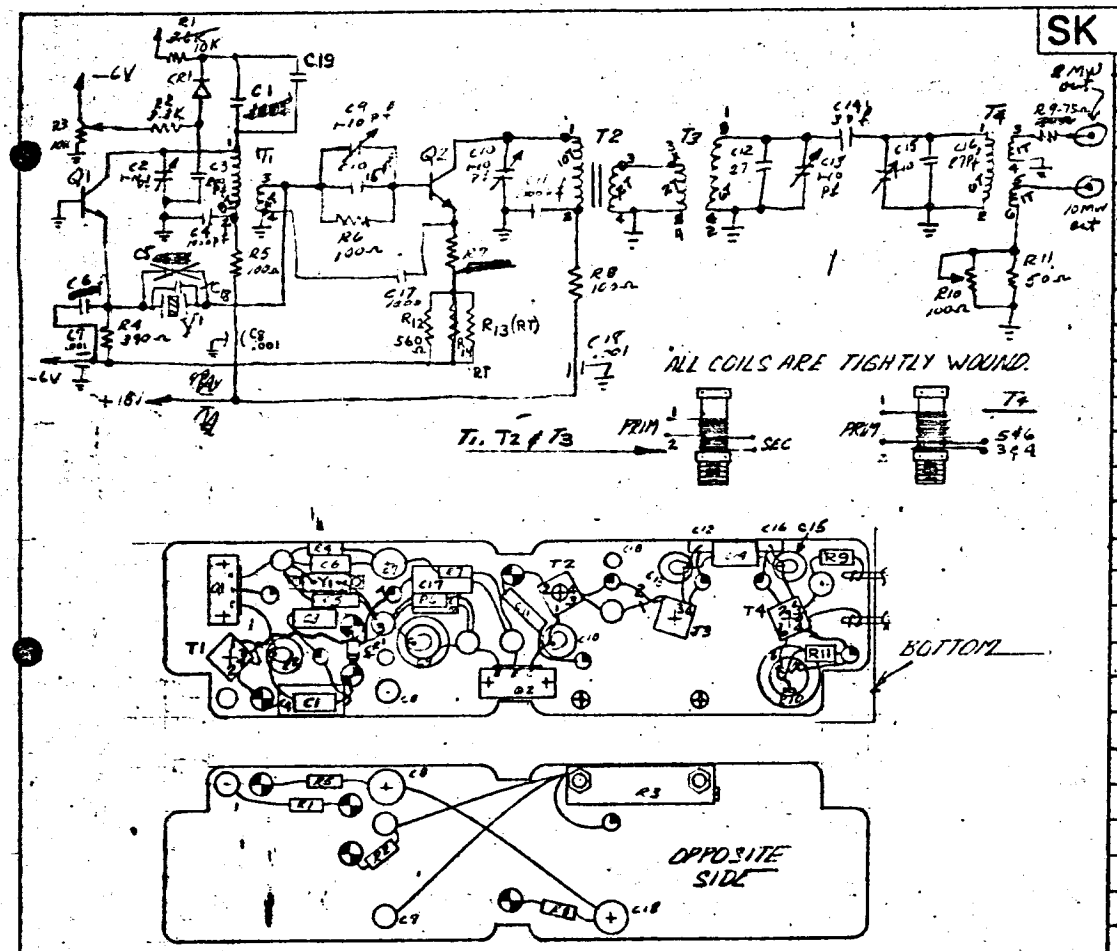

SK		CHG LTR		
1			S/N1 0 pf S/N2 22 pf CORNING	C_{18}
1	24-001	MICRO METALS	CORE	T2
4			TERMINAL INSUL FEED THRU	⊕
8			TERMINAL INSUL	○
9	1280B/ET20GA	STL	TERMINAL GND	◐
4	A11021	STL	COIL FORM	T1, T2, T3 & T4
2	A-11022	STL	HEAT SINK	
2	2N2219	MOTORLA	TRANSISTOR	Q1 & Q2
1	JF-H3W	JAMES KNIGHT	CRYSTAL 71.138250 MC	Y1
1	V-28	PSI	DIODE VARICAP	CR1
1	CYFM10C270J	CORNING	27 pf CAPACITOR	C16
1	CY12C3RO	VITRAMAN	3 pf "	C14
1	CYFM10C271J	CORNING	27 pf "	C12
1	CYFM10C150J	CORNING	15 pf "	C10
3	FA5C-102W	ALLEN BRADLEY	.001 µf " FEED THRU	C7, C8, C18
1	CYFM10C[illegible]J	CORNING	S/N1 150 pf S/N2 75 pf	C6
1	CYFM10C430J	CORNING	S/N1 43 pf S/N2 10 pf	C5
3	CYFM15C102J	CORNING	1000 pf "	C4, C11 & C17
1	CYFM10C201J	CORNING	200 pf "	C3
5	2950	JOHANSON	1-10 " ADJ	C2, C9, C10, C13 & C15
1	[illegible]	[illegible]	S/N1 12 pf CENTRALAB N3300 S/N2 22 pf CORNING	C1
1			50 Ω RESISTOR 1/4 W 5%	R11
1	AS3601	OHMITE	100 Ω " ADJ	R10
1			75 Ω "	R9
1			S/N1 33 Ω S/N2 560 Ω	R7
3			100 Ω "	R5, R6 & R8
1			390 Ω "	R4
1	236L	BOURNS	10K " ADJ	R3
1			3.3K "	R2
1			10K " 1/4 W	R1
NO REQD	MFR OR STL PART NO.	MFR	DESCRIPTION	SYM

T1	T2	T3	T4
PRIM 8T #24	PRIM 10T #24	PRIM 2T #24	PRIM 5T #24
SEC 4T #24	SEC 2T #24	SEC 5T #24	SEC 1T #24
			THIRD 1T #24

NO REQD	MFR OR STL PART NO	MFR	DESCRIPTION	SYM
2			S/N1 GLENNITE THERM. 33 pf S/N2 0	R13 & R14
1			S/N1 10 pf CENTRALAB N1500 S/N2 0 pf	C19
1			S/N1 560 Ω S/N2 0 Ω	R12

ORIGINATOR: I. HARRIS
DATE: 11-1-63
TITLE: 71.138250 MC VCO
MJO 4126-01-01

ENGINEERING SKETCH
SPACE TECHNOLOGY LABORATORIES, INC.
LOS ANGELES, CALIFORNIA
SK A-11701-4
SHEET OF

STL Form 523B (Rev. 2-59)

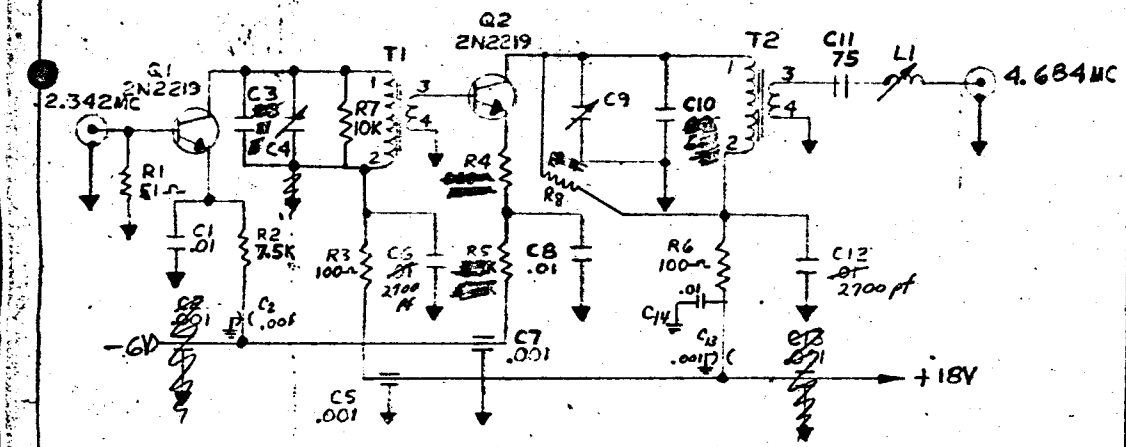

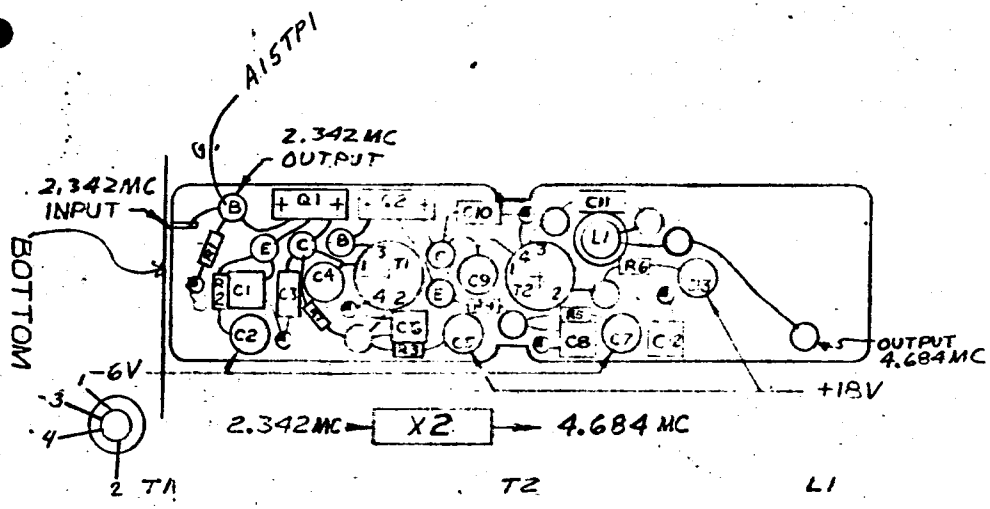

T1	T2	L1	
PRIM. 50T #26, RD & RD	PRIM. 50T #26, RD & RD	TUNED TO 9.368 MC	
SEC. 10T #26, 360°	SEC. 4T #22, 360°		

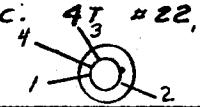

SK

NO. REQD	MFR OR STL PART NO.	MFR	DESCRIPTION	SYM
1	27-9	AMPHENOL	CONNECTOR	
13			TERMINAL, INSUL	
6	1280B/ET2064		TERMINAL, GND	
2	.		HEAT SINK, TO-5	
2	T50-2	MICROMETALS	TRANSFORMER	T1, T2
1	4310	MILLER	COIL	L1
2	2N2219	MOTOROLA	TRANSISTOR	Q1, Q2
1				
1	.	CORNING	51 pf ① 36pf ②	C3
2	JMC2050	JOHANSON	CAPACITOR, VARIABLE	C4, C9
1	CYFM10C750J	CORNING	75pf CAPACITOR	C11
1	CYFM10C[illegible]J	CORNING	CAPACITOR 62 pf ① 47pf ②	[illegible], C10
4	FA5C-102W	ALLEN BRADLEY	.001 µf CAPACITOR FEEDTHRU	C2, C5, C7, C13
3	VK306CW103K	VITRAMON	.01 µf CAPACITOR	C1, C8, C14
2		EL MENCO	2700 pf	C6 & C12
1			12 K ① 5.6K ②	R8
1			10K RESISTOR 1/4W	R7
1			4.3K RESISTOR 1/4W 3.3K ②	R5
1			130 ① 820Ω RESISTOR 1/4W 330Ω ②	R4
2			100Ω RESISTOR 1/4W	R3, R6
1			7.5K RESISTOR 1/4W	R2
1			51Ω RESISTOR 1/4W	R1

CHG LTR

ORIGINATOR L L FREED DATE 10-4-63

TITLE X 2 MUL. 4.684 MHZ

MJD 4126-01-01

ENGINEERING SKETCH
SPACE TECHNOLOGY LABORATORIES, INC.
LOS ANGELES, CALIFORNIA

SKA-11800-1

SHEET OF

STL Form 423B Rev 3

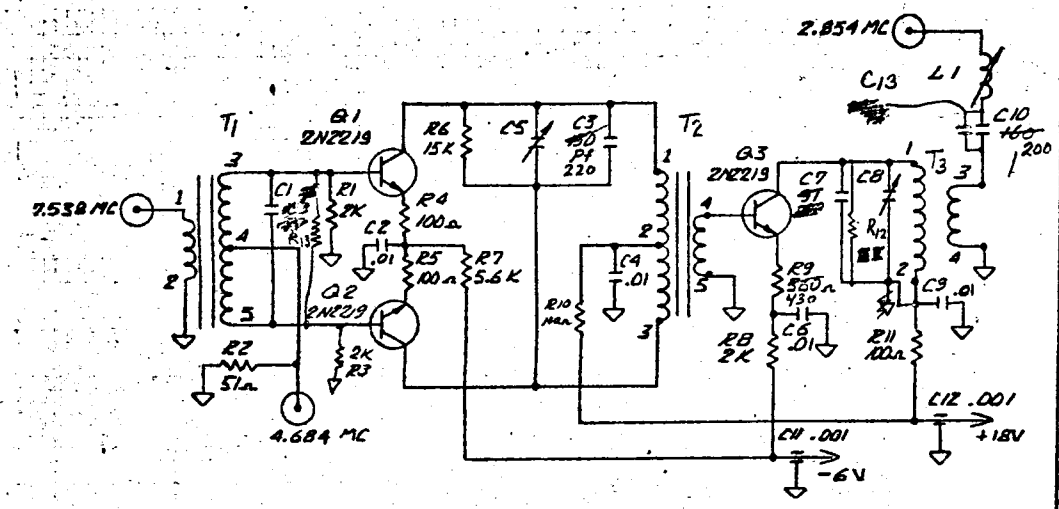

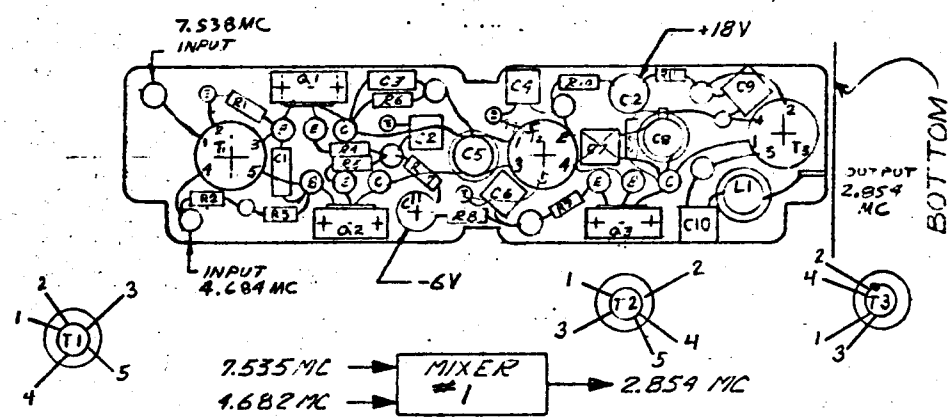

T1- SEC 30T C.T. #28,360° PRIM 4T #26,360°

T2 PRIM 48T C.T. #30,360° SEC 6T #26,360°

T3 PRIM 70T #28,360° SEC 5T #26,360°

SK

NO. REQD	MFR OR STL PART NO.	MFR	DESCRIPTION	SYM
16			TERMINAL INSUL	
6		12808/ET206A	TERMINAL, GND	
1	27-9	AMPHENOL	CONNECTOR	
3		HEAT SINK	TO-5	
2			2K ① NONE ②	R1 & R3
3	T50-2	MICRO METALS	TRANSFORMER	T1, T2 & T3
1			NONE ① 10K ②	R13
1	4310	MILLER	COIL	L1
[illegible]		[illegible]	[illegible]	[illegible]
3	2N2219	MOTOROLA	TRANSISTOR	Q1, Q2 & Q3
1		CORNING	27 Pf ① NONE ②	C13
1	CYFM10C~~101~~ 220 J	CORNING	~~[illegible]~~ 75 Pf CAPACITOR 68 Pf ②	C1
1	CYFM10C~~131~~ 221 J	CORNING	~~130 Pf~~ 220 Pf "	C3
2	FA5C-102W	ALLEN BRADLEY	.001 µf " FEED THRU	C11 & C12
4	VF306CW103K	VITRAMON	.01 µf "	C2, C4 C6 & C9
1	CYFM10C ~~910~~ 101 J	CORNING	~~91 Pf~~ 100 Pf ① " 62 Pf ②	C7
1	HRDM-15-201J	~~EL MENCO~~ CORNING	~~160~~ 200 Pf [illegible]	C10
2	JMC 2950	JOHANSON	"	C5 & C8
1			15 K ① 18K ②	R12
~~4~~ 1			2K RESISTOR 1/4 W	~~R2, R3~~ & R8
1			51Ω " "	R2
4			100Ω " "	R4, R5, R10 & R11
6			15K " "	R6
1			5.6K " "	R7
1			560Ω " "	R9

ORIGINATOR	DATE	TITLE	
I. HARRIS	9-30-63	MIXER 2.854 MHZ	ENGINEERING SKETCH SPACE TECHNOLOGY LABORATORIES, INC. LOS ANGELES, CALIFORNIA
J.H.	10/3/63		SK A-11800-2
MJO 4120-01-01			SHEET OF

STL Form 523B (Rev. 2-59)

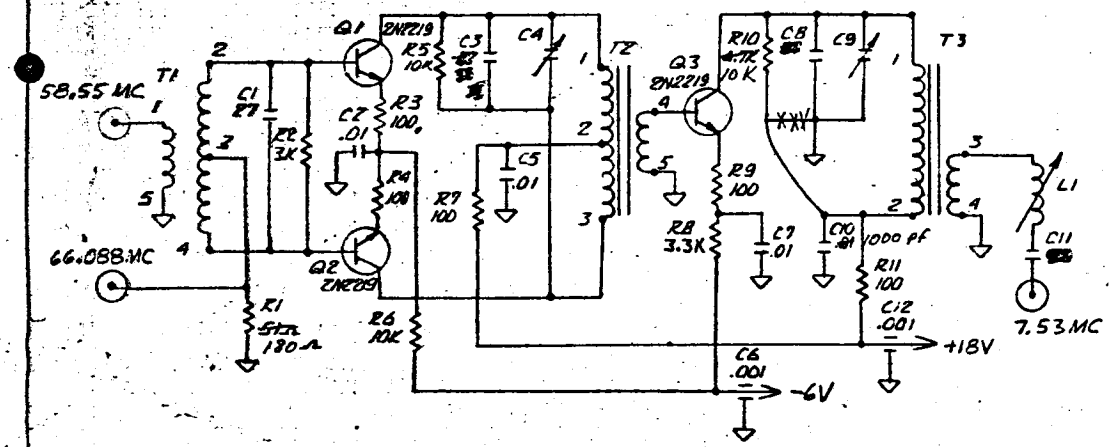

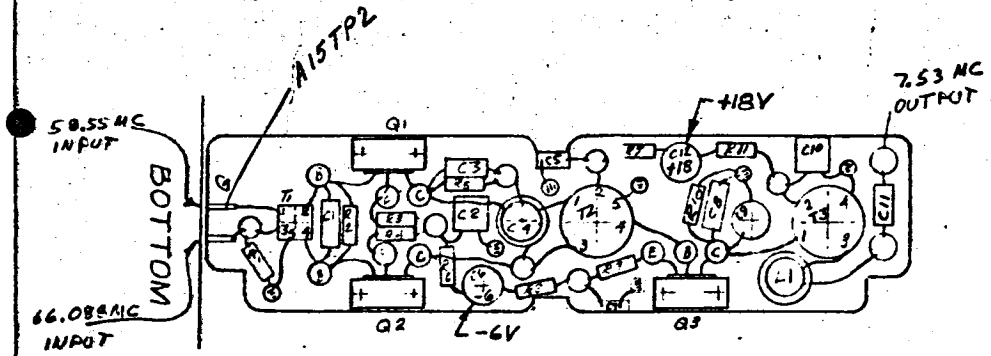

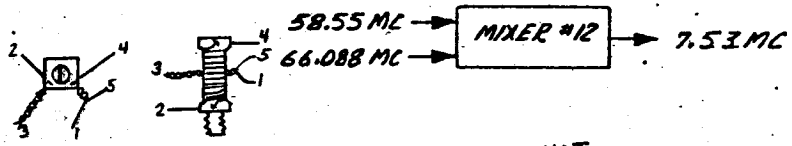

4 T1 #24
PRIM 8T #22
SEC 8T CT #22
1/4" COIL FORM EQUALL SPACED
1/2" .2μh
TUNED TO 58.55 MC

T2 40T
PRIM 4T CT #24, 360°
SEC 4T #22, 360°
TUNED TO 7.53 MC

T3
PRIM 40T #24, 360°
SEC 4T #22, 360°
TUNED TO 7.53 MC

SK

NO. REQD	MFR OR STL PART NO.	MFR	DESCRIPTION	SYM
			CHG LTR	
19			TERMINAL INSUL	
6			TERMINAL GND	
2	27-9	AMPHENOL	CONNECTOR	
3			HEAT SINK	
1			TRANSFORMER	T1
2	T50-2	MICRO METALS	TRANSFORMER	T2 & T3
1			27Pf ① 10Pf ②	C8
1	4309	MILLER	COIL	L1
1		EL MENCO	1000 Pf	C10
3	2N2219	MOTOROLA	TRANSISTOR	Q1 Q2 & Q3
1			3.3K RESISTOR 1/4 W	R8
1	CYFM10C39J	CORNING	50Pf ① 39Pf ② CAPACITOR	C11
2	FASC-102W	ALLEN-BRADLEY	.001uf " FEED THRU	C6 & C12
2	JMC 2950	JOHANSON	" VARIABLE	C4 & C9
1	CYFM10C330J	CORNING	33 Pf ① " 30 Pf ②	C3
4 3	VK30CW103K	VITRAMON	.01uf "	C2, C5, C7 etc
1	CYFM10C270J	CORNING	27pf "	C1
1			180Ω RESISTOR 1/4 W	R1
1			10 K ① " 4.7K ② "	R10
2			10 K " "	R5 & R6
5			100Ω " "	R3, R4, R7, R9 & R11
1			3K " "	R2

ORIGINATOR I. HARRIS
DATE 9-30-63
TITLE MIXER 7.53 MHZ
MJO 4126-01-01

ENGINEERING SKETCH
SPACE TECHNOLOGY LABORATORIES, INC.
LOS ANGELES, CALIFORNIA
SK A-11800-3
SHEET OF

STL Form 5238 (Rev. 2-59)

SK | CHG LTR

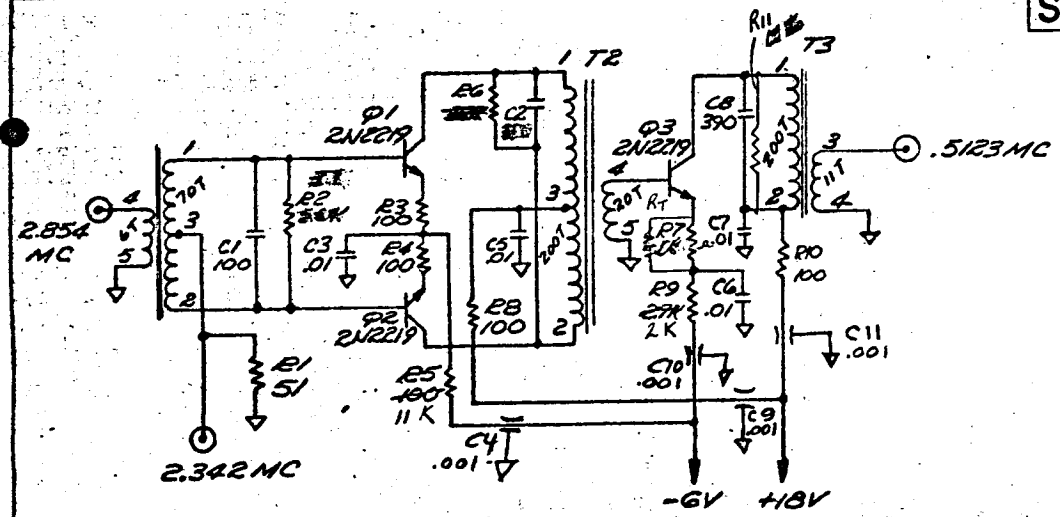

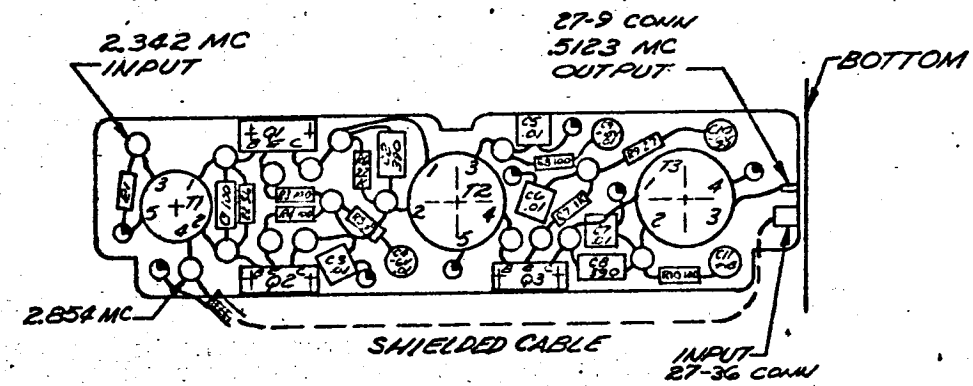

MIXER #2

	T1		T2		T3	
PRI	6T	#24, 360°	PRI	200T CT	#28, RD & RD	PRI	200T	#28, RD & RD
SEC	70T CT	#24, 360° #28 (WIND SEC. 1ST)	SEC	20T	#26, 360°	SEC	11T	#26, 360°

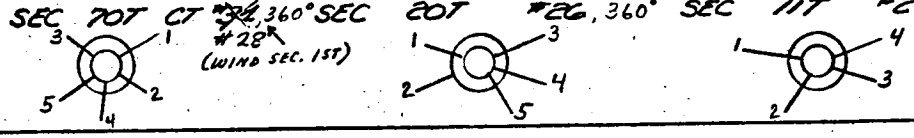

NO. REQD	MFR OR STL PART NO	MFR	DISCRIPTION	SYM
1	31TD2	GLENNITE		RT
1			15 K ① 10K ②	R11
1			11 K	R5
8	ET2064	STL	TERMINAL, GRD ST/OFF	◐
17	4073-062	LERCO	TERMINAL, INSUL ST/OFF	○
3	TO-5		HEAT SINK, BORON NITRATE	
3	2N2219	MOTOROLA	TRANSISTOR	Q1,2,3
2	T68-2	MICRO-METALS	CORE, TRANSFORMER	T2,3
1	T50-2	MICRO-METALS	CORE, TRANSFORMER	T1
2			390 pf ① 330 pf ②	C2 & C8
4	FA5C-102W	ALLEN-BRADLEY	.01 μF CAPACITOR, FEED THRU	C4,11,9,10
4	VK30CW103K	VITRAMON	.01 μF CAPACITOR	C3,5,6,7
~~[illegible]~~	~~[illegible]~~	~~[illegible]~~	~~[illegible]~~	~~[illegible]~~
1	CYFM10C101J	CORNING	100 PF CAPACITOR	C1
1			51Ω RESISTOR	R1
1			~~5.6K~~ 10 K ① 5.6K ②	R2
~~5~~ 4			100Ω	R3,4,5,8,10
1			22K ① 43K ②	R6
1			~~7K~~ 560 Ω	R7
1			~~2.7K~~ 2 K RESISTOR	R9

ORIGINATOR	DATE	TITLE
Bruce de Leon	11-1-63	MIXER .5123 MHZ

MJO

ENGINEERING SKETCH
SPACE TECHNOLOGY LABORATORIES, INC.
LOS ANGELES, CALIFORNIA

SK A-11800-4

SHEET OF

STL Form 5238 (Rev. 2-59)

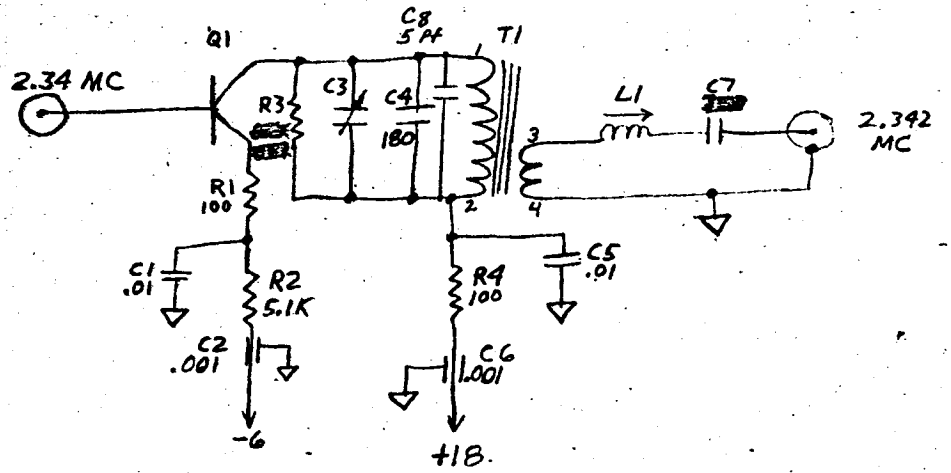

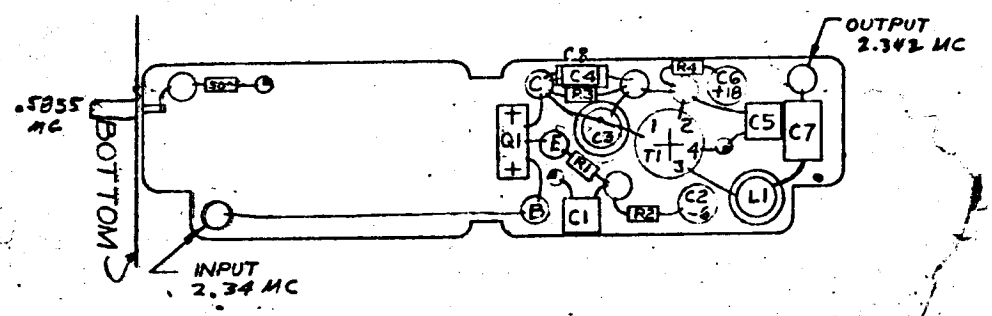

T1

PRI. 63T #28, 360°

SEC. 6T #24, 360°

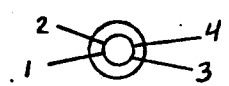

SK

NO REQD	MFR OR STL PART NO	MFR	DESCRIPTION	SYM
			CHG LTR	
1	27-9	AMPHENOL	CONNECTOR	
3	1280B/ET2064	STL	TERMINAL GRD	
9	4073/062	LERCO	TERMINAL INSUL.	
1	2N2219	MOTOROLA	TRANSISTOR	Q1
1	T50-2	MICRO-METALS	TRANSFORMER	T1
1	4310	MILLER	INDUCTOR	L1
1		CORNING	5 pf ① CAPACITOR NONE ②	C8
1	CYFM15C331J	CORNING	330 pf ① CAPACITOR 270pf ②	C7
1	CYFM10C181J	CORNING	180 pf CAPACITOR	C4
1	JMC-2950	JOHANSON	0-10 pf CAPACITOR, VARIABLE	C3
2	FA5C-102W	ALLEN-BRADLEY	.001 MF CAPACITOR	C2, C6
2	VK306CW103K	VITRAMON	.01 MF CAPACITOR	C1, C5
			50 Ω RESISTOR 1/4W	
1			6.8K ① ~~8.2K~~ RESISTOR 1/4 W ②	R3'
1			5.1K RESISTOR 1/4W	R2
2			100 Ω RESISTOR 1/4W	R1, R4

ORIGINATOR: LL FREED

DATE: 10-10-62

TITLE: 2.342 MHZ POWER AMPLIFIER

MJO 4126-01-01

ENGINEERING SKETCH
SPACE TECHNOLOGY LABORATORIES, INC.
LOS ANGELES, CALIFORNIA

SK A-11800-5

SHEET OF

STL Form 5218 (Rev. 2-59)

SK | CHG LTR

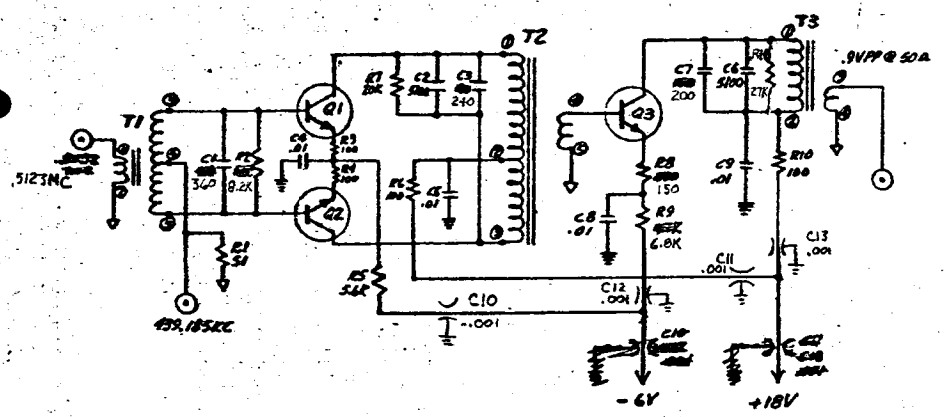

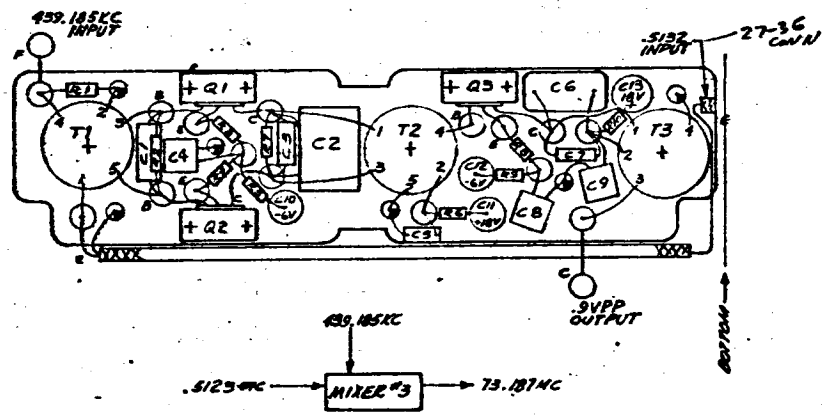

T1 PRIM 200T C/T 30 GAGE WIRE SEC 17T 28 GAGE WIRE.
T2 PRIM 400T C/T 34 GAGE WIRE SEC 40T 28 GAGE WIRE.
T3 PRIM 400T 34 GAGE WIRE SEC 25T 28 GAGE WIRE.

NO. REQD	MFR OR STL PART NO.	MFR	DESCRIPTION	SYM
1		CORNING	NONE ① 39pf ②	C14
3	CORE T68-2	MICRO METALS	TRANSFORMER	T1, T2, T3
3	2N2219	MOTOROLA	TRANSISTORS	Q1, Q2, Q3
4	TYP FA5C-102N	ALLEN BRADLEY	FEED THRU .001μf	C10, C11, C12 & C13
3	TO-5		HEAT SINK	
1	CYFM15C[illegible]J	CORNING	360pf ① CAPACITORS 270pf ②	C1
1	CYFM10C[illegible]	↕	240 pf ① NONE ②	C3
1	CYFM10C[illegible]J	CORNING	200 pf ① NONE ②	C7
2	HRDA1-19-512J	ELMENCO		C2 & C6
4	VK30CW103K	VITRAMON	CAPACITORS	C4, C5, C8 & C9
1			27K ① 21K ② 1/4W ± 5%	R11
1			51Ω RESISTOR 1/4W ±5%	R1
1			8.2K ① 10K ②	R2
4			100Ω	R3, R4, R6, R10
1			5.6K	R5
1			20K	R7
1			150Ω ① 470Ω ②	R8
1			6.8K ① 4.7K ② RESISTOR 1/4W ±5%	R9

ORIGINATOR CHARLEY PRICE | DATE 10/31/63 | TITLE MODULE COMPARTMENT

MJO 4126-01-01

ENGINEERING SKETCH
SPACE TECHNOLOGY LABORATORIES, INC.
LOS ANGELES, CALIFORNIA
SK A-11801-1
SHEET 1 OF 1

STL Form 523B (Rev. 2-59)

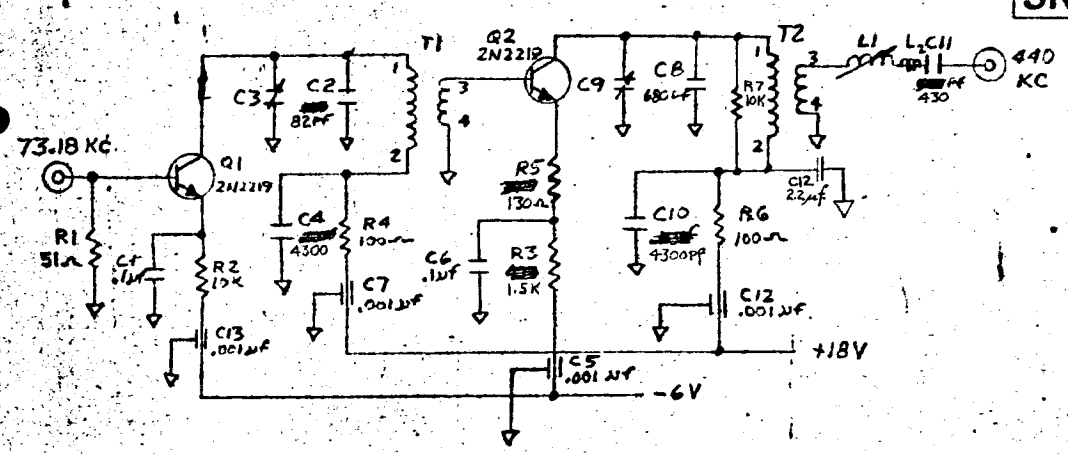

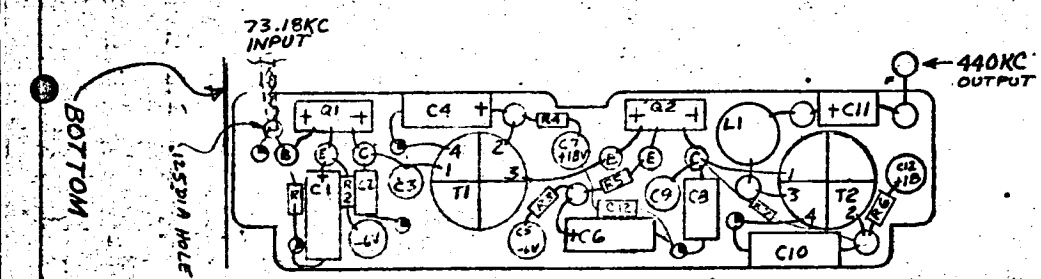

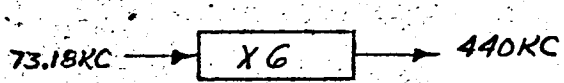

T1	T2
PRI. 200T #	PRI. 100T #30
SEC. 25T #26	SEC. 6T #26

SK

NO. REQD	MFR OR STL PART NO.	MFR	DESCRIPTION	SYM
12	4073-062	LERCO	INSUL. TERMINALS	
6	ET2064	STL	GROUND TERMINALS	
2	TO-5		HEAT SINK, BORON NITRITE	
2	2N2219	MOTOROLA	TRANSISTOR	Q1, Q2
2	T68-3	MICRO METALS	TRANSFORMER	T1, T2
1			NONE ① 150μh ②	L2
1	4315	MILLER	INDUCTOR	L1
1			10K RESISTOR ¼W	R-7
1	150D	TEXAS MST	2.2 μf ① CAPACITOR, 35V, NONE ②	C12
1	CYFM15C[illegible]J	CORNING	480 PF ① CAPACITOR 500pf ②	C11
1	CYFM15C[illegible]J	CORNING	680 PF ① CAPACITOR 620pf ②	C8
4	5A5C	ALLEN-BRADLEY	.001 μf CAPACITOR, FEED-THRU	C5, 7, 12, 13
2	JMC 2950	JOHANSON	CAPACITOR, VARIABLE	C3, C9
1	CYFM10C[illegible]J	CORNING	82pf ① CAPACITOR 75pf ②	C2
2	MC80V104AK	AEROVOX	.1 μf CAPACITOR	C1, 6, 13
OR 2	150D104X9035A2	SPRAGUE	.1 μf CAPACITOR	C1, 6, 13
2	VY316432J	VITRAMON	4300 PF	C4, C10
1			130Ω RESISTOR	R5
2			100Ω	R4, R6
1			1.5K	R3
1			10K	R2
1			51Ω RESISTOR	R1

ORIGINATOR	DATE	TITLE	
L. L. FREED	10-14-3	X6 MUL 440 KHZ	ENGINEERING SKETCH SPACE TECHNOLOGY LABORATORIES, INC. LOS ANGELES, CALIFORNIA
MJO 4126-01-01			SK A-11801-2
			SHEET OF

STL Form 5210 Rev. 2

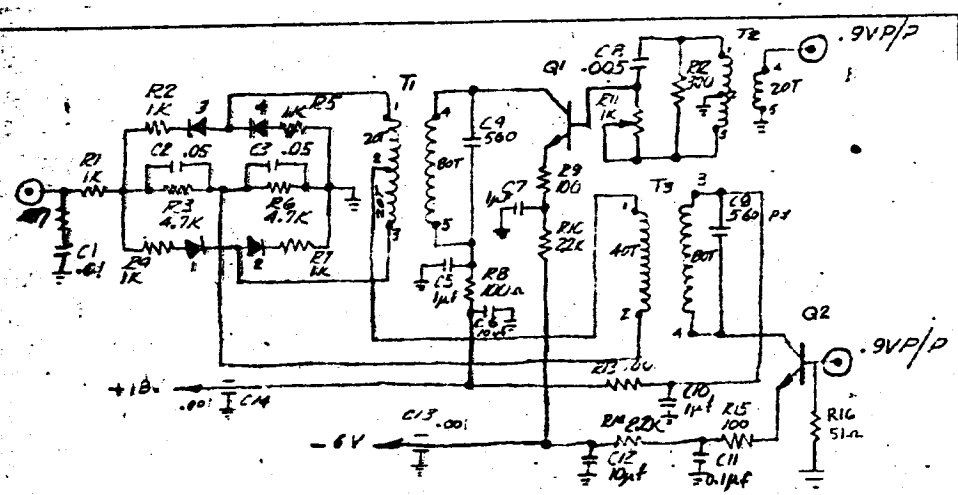

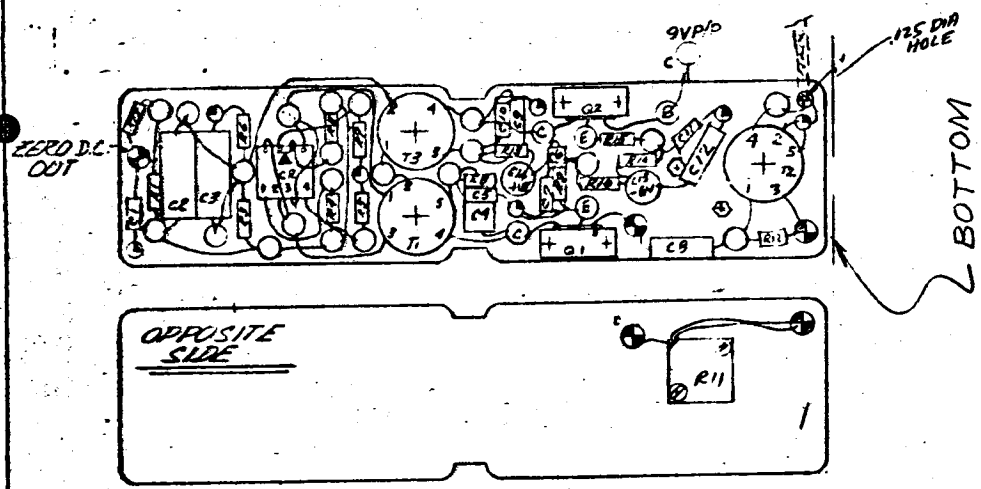

NOTE: WIND 1/4" TEFLON TAPE AROUND CORE BEFORE INSTALLING WIRE

T1	T2	T3
PRIM 80T #28	PRIM 20T #24	PRIM 80T #28
SEC 40T CT #26	SEC 40T CT #26	SEC 40T #26

SK 73KC CHG LTR

NO. REQD	MFR OR STL PART NO.	MFR	DESCRIPTION	SYM
2			TERMINAL INSUL FEED THRU	
27			TERMINAL INSUL	
9	1280B ET206A	STL	TERMINAL GND	
1	VK30CW403K	VITRAMON	.01µf	C1
1	FA4000	FAIRCHILD QUAD	DIODE - 1-2-3-4	CR
2	2N2219	MOTOROLA	TRANSISTOR	Q1 & Q2
3	0-3	GENERAL CERAMICS	TRANSFORMER CORE	T1, T2 & T3
2	FA5C-102W	ALLEN BRADLEY	.001 CAPACITOR FEEDTHRU	C13 & C14
1	MCB0V502AK	~~AEROVOX~~ VITRAMON	.005µf "	C8
2	150D106X002CB2	SPRAGUE	10µf "	C6 & C12
4	150D104X535A2	SPRAGUE	.1µf "	C5, C7, C10 & C11
2	CYFM15C56W	CORNING	560pf "	C4 & C9
2	MCB0V503AK	AEROVOX	.05µf "	C2 & C3
1			2.2K RESISTOR 1/4 W 5%	R14
1			51Ω RESISTOR 1/4 W 5%	R16
1			300Ω RESISTOR 1/4 W 5%	R2
1	300-66H-1000	DAYSTROM PACIFIC	1K " ADJ.	R11
1			22K "	R10
4			100Ω "	R8, R9, R13 & R15
2			4.7K "	R3 & R6
5			1K "	R1, R2, R4, R5 & R7

ORIGINATOR I. HARRIS — DATE 10-28-63

TITLE: 73KC Ø DETECTOR

MJO 4126-01-01

ENGINEERING SKETCH
SPACE TECHNOLOGY LABORATORIES, INC.
LOS ANGELES, CALIFORNIA

SK A-11801-3

SHEET OF

STL Form 523B (Rev. 2-59)

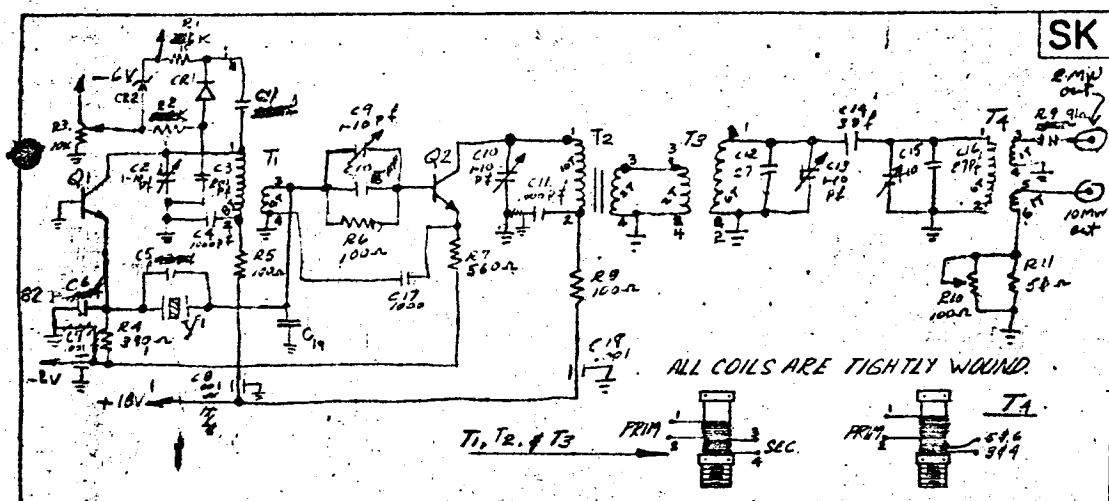

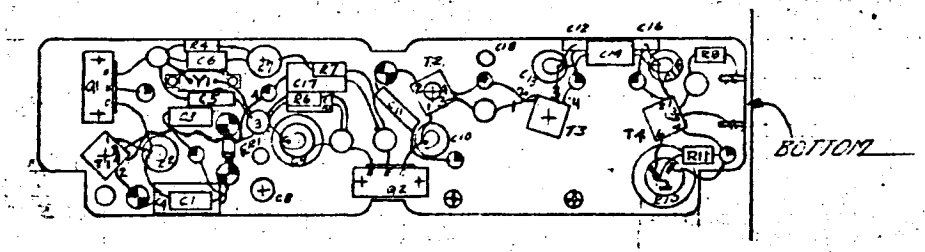

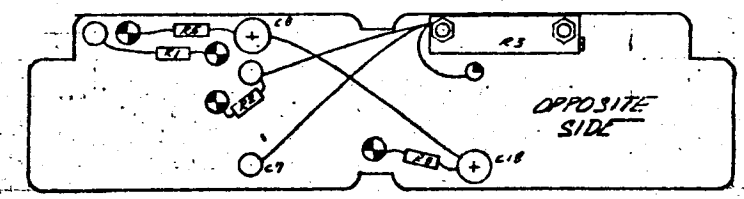

T1	T2	T3	T4
PRIM 8T #24	PRIM 10T #24	PRIM 2T #24	PRIM 6T #24
SEC 4T #24	SEC 2T #24	SEC 6T #24	SEC 1T #24
			THIRD 1T #24

SK

NO REQD	MFR or STL PART NO.	MFR	DESCRIPTION	SYM
1	SV-5	CHG LTR TRANSITRON	ZENER	CR2
1	24-001	MICRO METALS	CORE	T2
4			TERMINAL INSUL FEED THRU	
8			TERMINAL INSUL	
9	128CB/ET206A	STL	TERMINAL GND	
4	A11021	STL	COIL FORM	T1, T2, T3 & T4
2	A-11022	STL	HEAT SINK	
2	2N2219	MOTORLA	TRANSISTOR	Q1 & Q2
1	JF-H3W	JAMES KNIGHT	CRYSTAL 66.088312 MC	Y1
1	V-27	PSI	DIODE VARICAP	CR1
1	CYFM10C270J	CORNING	27 Pf CAPACITOR	C16
1	CY12C3RD	VITRAMAN	3 Pf "	C14
1	CYFM10C271J	CORNING	27 Pf "	C12
1	CYFM10C[illegible]J	CORNING	30 Pf ① " 15 Pf ②	C10
3	FA5C-102W	ALLEN BRADLEY	.001 µf " FEED THRU	C7, C8, C15
1	CYFM10C[illegible]J	CORNING	75 Pf ① " 82 Pf ②	C6
1	CYFM10C[illegible]J	CORNING	22 Pf " 39 ②	C5
3	CYFM15C102J	CORNING	1000 Pf "	C4, C11 & C17
1	CYFM10C201J	CORNING	200 Pf "	C3
5	2950	JOHANSON	1-10 " ADJ	C2, C9, C10, C13 & C15
1	CYFM10C390J	~~CORNING~~ CENTRALAB	39 Pf N1500 ① " 20 Pf 10 Pf 10 Pf N1500 ②	C1
1			50 Ω RESISTOR 1/4 W 5%	R11
1	AS3601	OHMITE	100 Ω " ADJ	R10
1			91 Ω "	R9
1			560 Ω "	R7
3			100 Ω "	R5, R6 & R8
1			390 Ω "	R4
1	236L	BOURNS	10K " ADJ	R3
1			3.3K ① " 10K ②	R2
1			10K "	R1

ORIGINATOR	DATE	TITLE	
I. HARRIS	11-1-63	66.088312 MC VCO	ENGINEERING SKETCH SPACE TECHNOLOGY LABORATORIES, INC. LOS ANGELES, CALIFORNIA
MJO 4126-01-01			SK A-11801-4 SHEET OF

STL Form 523B (Rev. 2-59)

REVISIONS						
ZONE	SYM	DESCRIPTION	BY	DATE	CK'D	APPROVAL

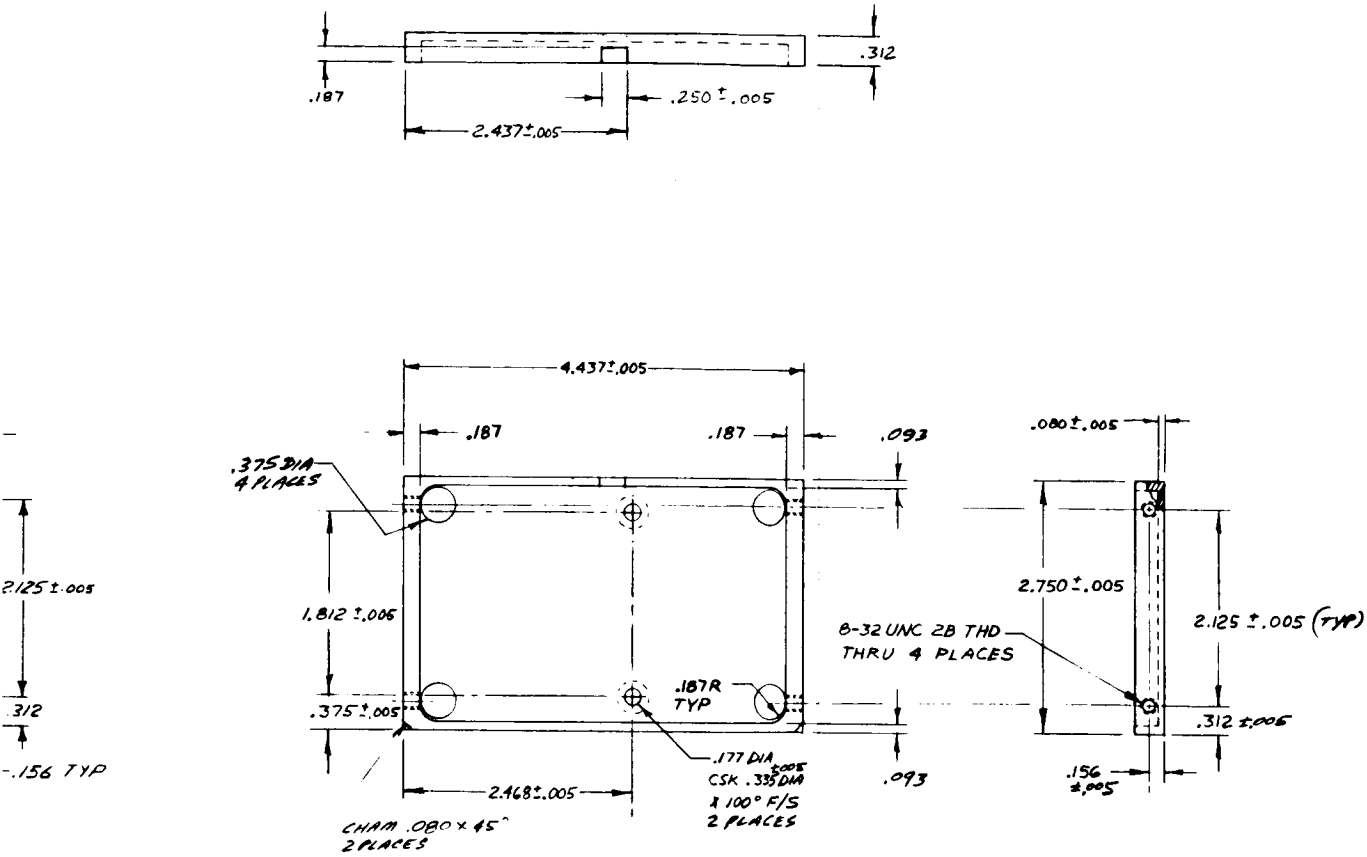

-3

REQD PER NOTED ASSY			PART NO.	PART NAME	STOCK	MATERIAL	SPEC	CKT REF	CODE IDENT	ZONE	ITEM NO.	USED ON	NEXT ASSY	NEXT ASSY	FINAL ASSY
						DESCRIPTION									
1						6061-T6 AL ALY									
	1					6061-T6 AL ALY									
		1				6061-T6 AL ALY									
-3	-2	-1													

LIST OF MATERIALS — APPLICATION — QTY REQD

CONFIGURATION

UNLESS OTHERWISE SPECIFIED

1. DIMENSIONING & TOLERANCING PER MIL-STD-8.
2. DIMENSIONS IN INCHES
   TOLERANCES .XXX=±.030 .XX=±.03 .X=±.1
   ANGLES ±0°30'
3. STD HOLE TOLERANCES PER AND10387.
4. ALL DIMS TO APPLY AFTER PLATING OR CONVERSION COATING.
5. REMOVE BURRS & SHARP EDGES.
6. SURFACE ROUGHNESS PER MIL-STD-10. ✓
7. RIVET CODING PER NAS 523.
8. WELD SYMBOLS PER JAN-STD-19.
9. THREADS PER MIL-STD-8, MIL-S-7742 & MIL-P-7105.
10. ELECTRICAL & ELECTRONIC SYMBOLS & REFERENCE DESIGNATIONS PER MIL-STD-15 & MIL-STD-16.

FINISH: ELECTROLESS NICKLE .001 THK PER STL SPEC P6-3

HEAT TREAT

DO NOT SCALE DRAWING

THE FOLLOWING E.O.'S HAVE BEEN ATTACHED TO THIS PRINT

STL APPROVALS

DRAWN	I. HARRIS	9-6-63
CHECKED		
STRUCTURES		
MAT'LS & PROCESSES		
ENGR		
SUPERVISION		
SPECIAL		
OTHER APPROVALS		

SPACE TECHNOLOGY LABORATORIES, INC.
A SUBSIDIARY OF THOMPSON RAMO WOOLDRIDGE INC.
ONE SPACE PARK • REDONDO BEACH, CALIFORNIA

BRACKET, POWER SUPPLY MTG.

CODE IDENT NO.	DWG SIZE	
11982	D	A-11015
SCALE 1/1	WEIGHT	SHEET 1 OF 1

PE 3

APPLICABLE SPECIFICATIONS

THE ABOVE REFERENCED STL SPECS FORM A PART OF THIS DRAWING

MJD 9126-01-01

STL FORM 3850 REV. 10-62

THE INFORMATION AND TECHNICAL DATA DISCLOSED BY THIS DOCUMENT MAY BE USED AND DISSEMINATED FOR THE PURPOSES AND TO THE EXTENT AUTHORIZED BY SPACE TECHNOLOGY LABORATORIES, INC. IN ANY PROPOSAL, CONTRACT OR OTHER WRITTEN INSTRUMENT. SUCH INFORMATION AND TECHNICAL DATA ARE PROPRIETARY TO SPACE TECHNOLOGY LABORATORIES, INC. AND MAY NOT BE USED OR DISSEMINATED EXCEPT AS PROVIDED IN THE FOREGOING SENTENCE.

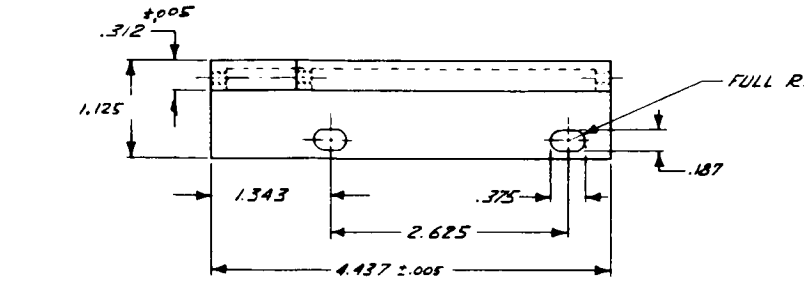

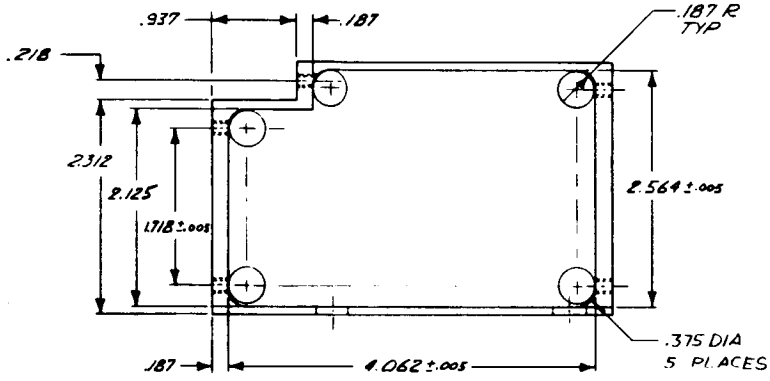

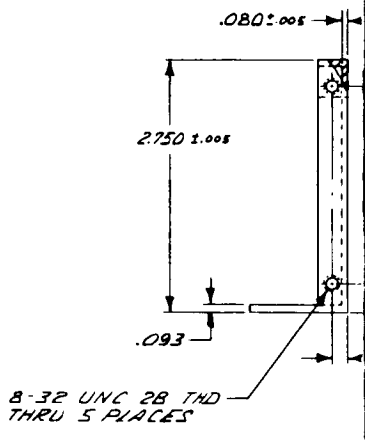

(-1) SIDE SHOWN (RIGHT)

(-2) SIDE OPPOSITE (LEFT)

1. IDENTIFICATION MARKING IN ACCORDANCE WITH STL SPEC. PR 12-1
TYPE_____CLASS_____PART NUMBER_____

NOTES: UNLESS OTHERWISE SPECIFIED

DIETERICH-POST CLEARPRINT 1020

REVISIONS						
ZONE	SYM	DESCRIPTION	BY	DATE	CK'D	APPROVAL

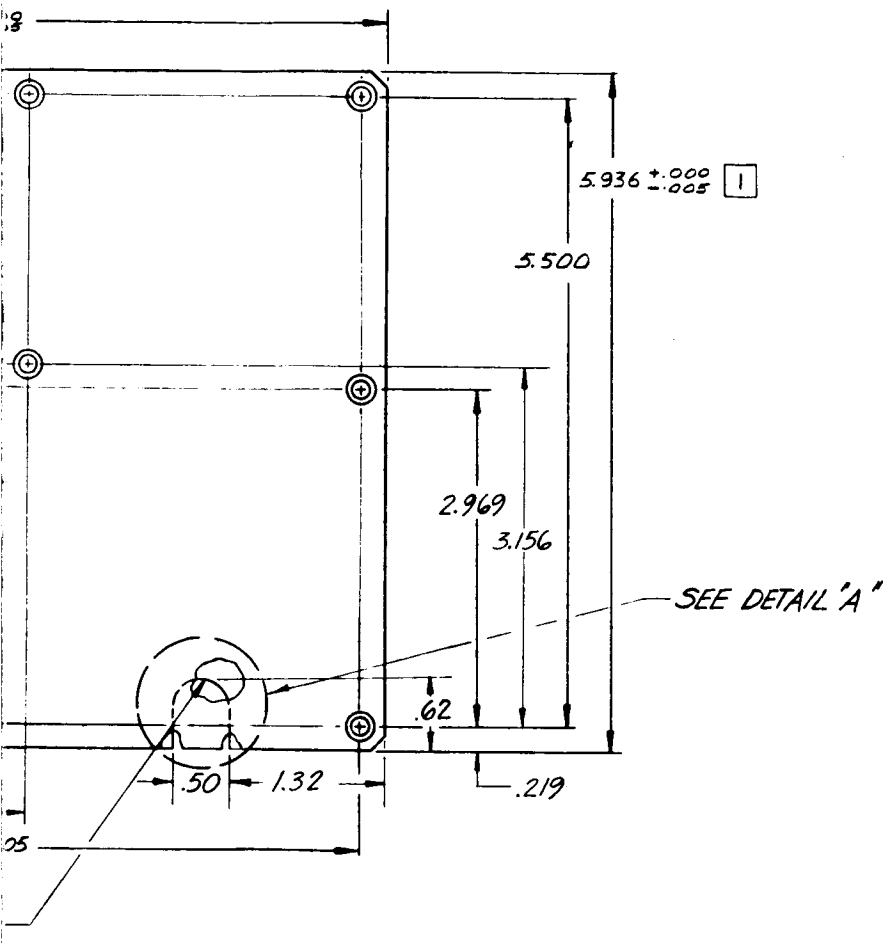

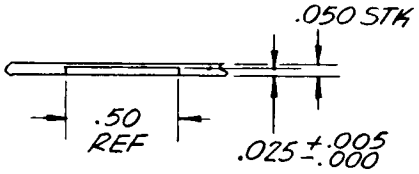

DETAIL A
SCALE: 2/1

A-11029

QTY REQD	PART NO.	PART NAME	STOCK	MATERIAL	SPEC	CODE IDENT	ZONE	ITEM NO.	USED ON	NEXT ASSY	NEXT ASSY	FINAL ASSY
		COVER	.050 SHT	6061-T6 AL ALY						A-11021	1	1

DESCRIPTION — LIST OF MATERIALS — APPLICATION — QTY REQD

UNLESS OTHERWISE SPECIFIED

DIMENSIONS IN INCHES
TOLERANCES .XXX = ±.010
.XX = ±.03
.X = ±.1
ANGLES ±0° 30'

REMOVE BURRS & SHARP EDGES
DIMENSIONING & TOLERANCING PER MIL-STD-8
SURFACE ROUGHNESS PER MIL-STD-10 ✓
THREADS PER MIL-STD-8, MIL-S-7742 & MIL-P-7105
RIVET CODING PER NAS 523
WELD SYMBOLS PER AWS-STD-19
STD HOLE TOLERANCES PER AND 10087
ELECTRICAL & ELECTRONIC SYMBOLS & REFERENCE DESIGNATIONS PER MIL-STD-15 & MIL-STD-16

FINISH
ELECTROLESS NICKLE .001 THK PER STL SPEC. PG-3 CLASS 1

HEAT TREAT

DO NOT SCALE DRAWING

THE FOLLOWING E.O.'S HAVE BEEN ATTACHED TO THIS PRINT

STL APPROVALS

DRAWN	I. HARRIS	9-27-63
CHECKED		
STRUCTURES		
MAT'LS & PROCESSES		
LEAD ENGR		
SUPERVISION		
SPECIAL		
OTHER APPROVALS		

SPACE TECHNOLOGY LABORATORIES, INC.
LOS ANGELES 45, CALIFORNIA

BOTTOM COVER MODULE - FREQUENCY SYNTHESIZER X32 MULTIPLIER

CODE IDENT NO. 11982 | DWG SIZE C | A-11029

SCALE 1/1 & NOTED | WEIGHT | SHEET 1 OF 1

STL FORM 1453C

THE INFORMATION AND TECHNICAL DATA DISCLOSED BY THIS DOCUMENT MAY BE USED AND DISSEMINATED FOR THE PURPOSES AND TO THE EXTENT AUTHORIZED BY SPACE TECHNOLOGY LABORATORIES, INC. IN ANY PROPOSAL, CONTRACT OR OTHER WRITTEN INSTRUMENT. SUCH INFORMATION AND TECHNICAL DATA ARE PROPRIETARY TO SPACE TECHNOLOGY LABORATORIES, INC. AND MAY NOT BE USED OR DISSEMINATED EXCEPT AS PROVIDED IN THE FOREGOING SENTENCE.

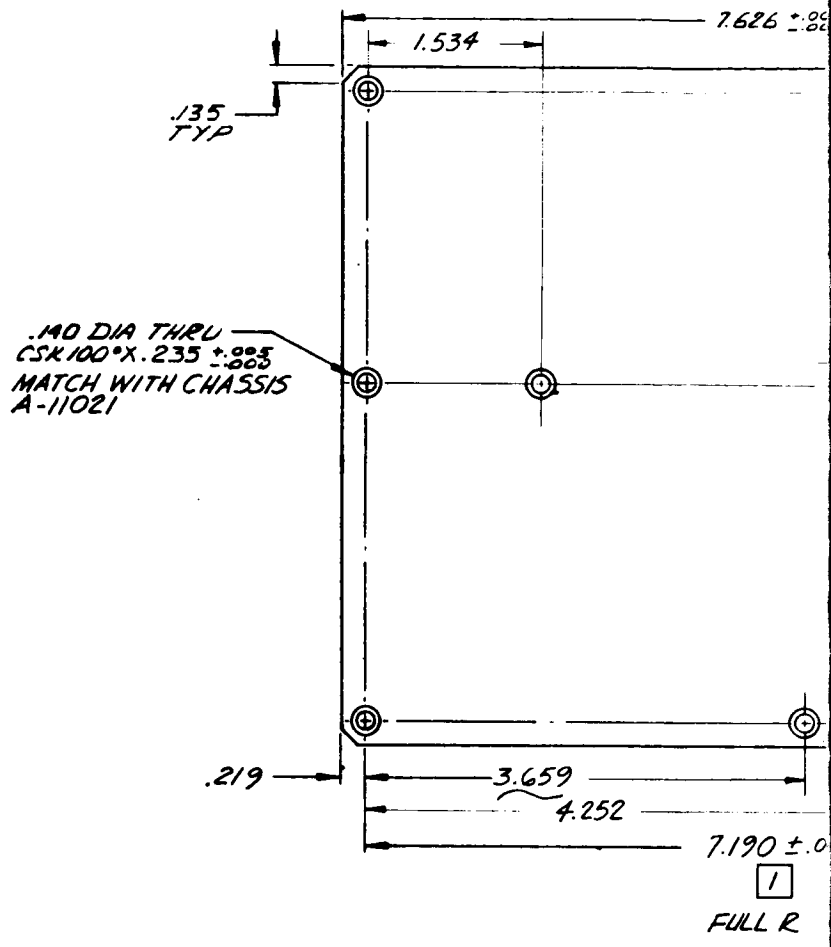

[redacted]

1 DIMS TO APPLY AFTER PLATING OR CONVERSION COATING

NOTES: UNLESS OTHERWISE SPECIFIED

P6-3

APPLICABLE SPECIFICATIONS

THE ABOVE REFERENCED STL SPECS FORM A PART OF THIS DRAWING.

REVISIONS						
ZONE	SYM	DESCRIPTION	BY	DATE	CK'D	APPROVAL

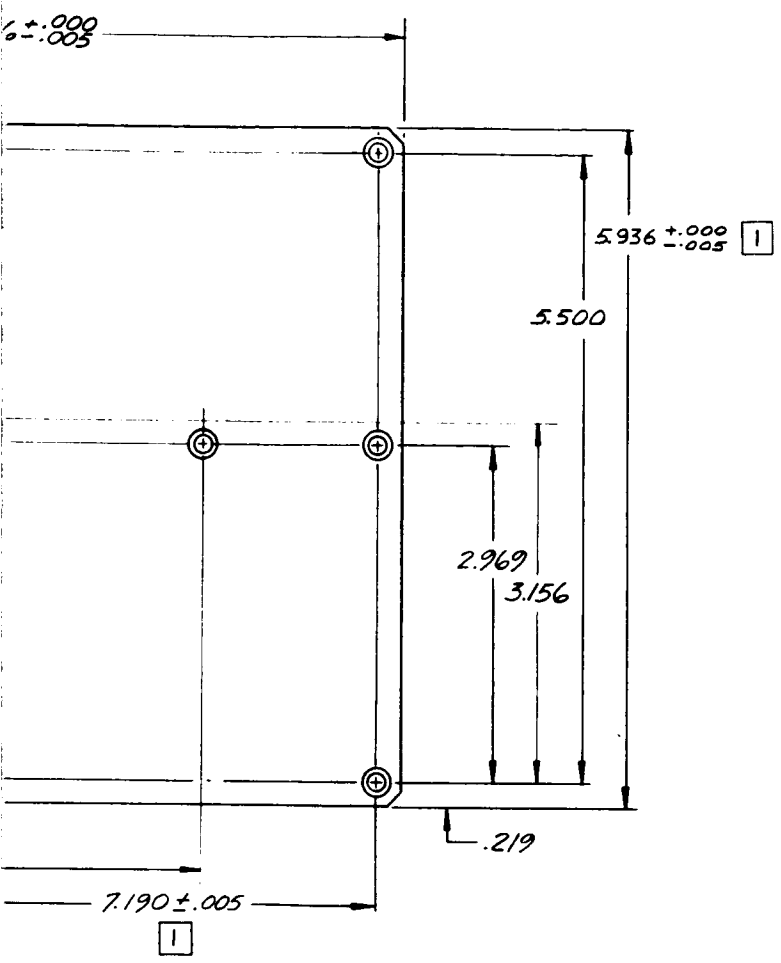

A-11028

QTY REQD	PART NO.	PART NAME	STOCK	MATERIAL	SPEC	CODE IDENT	ZONE	ITEM NO.	USED ON	NEXT ASSY	NEXT ASSY	FINAL ASSY
		COVER	.050 SHT	6061-T6 AL ALY						A-11021	1	1

DESCRIPTION

LIST OF MATERIALS — APPLICATION — QTY REQD

UNLESS OTHERWISE SPECIFIED

DIMENSIONS IN INCHES
TOLERANCES .XXX = ±.010
.XX = ±.03
.X = ±.1
ANGLES ±0° 30'

REMOVE BURRS & SHARP EDGES
DIMENSIONING & TOLERANCING PER MIL-STD-8
SURFACE ROUGHNESS PER MIL-STD-10 ✓
THREADS PER MIL-STD-8, MIL-S-7742 & MIL-P-7105
RIVET CODING PER NAS 523
WELD SYMBOLS PER JAN-STD-19
STD HOLE TOLERANCES PER AND 10387
ELECTRICAL & ELECTRONIC SYMBOLS & REFERENCE DESIGNATIONS PER MIL-STD-15 & MIL-STD-16

FINISH: ELECTROLESS NICKLE .001 THK PER STL SPEC. PE-3 CLASS 1

HEAT TREAT

DO NOT SCALE DRAWING

THE FOLLOWING E.O.'S HAVE BEEN ATTACHED TO THIS PRINT

STL APPROVALS		
DRAWN	I. HARRIS	9-27-63
CHECKED		
STRUCTURES		
MAT'LS & PROCESSES		
LEAD ENGR		
SUPERVISION		
SPECIAL		
OTHER APPROVALS		

SPACE TECHNOLOGY LABORATORIES, INC.
LOS ANGELES 45, CALIFORNIA

TOP COVER-MODULE-
FREQUENCY SYNTHESIZER
X32 MULTIPLIER

CODE IDENT NO. 11982 | DWG SIZE C | A-11028

SCALE 1/1 | WEIGHT | SHEET

STL FORM 1451C

THE INFORMATION AND TECHNICAL DATA DISCLOSED BY THIS DOCUMENT MAY BE USED AND DISSEMINATED FOR THE PURPOSES AND TO THE EXTENT AUTHORIZED BY SPACE TECHNOLOGY LABORATORIES, INC. IN ANY PROPOSAL, CONTRACT OR OTHER WRITTEN INSTRUMENT. SUCH INFORMATION AND TECHNICAL DATA ARE PROPRIETARY TO SPACE TECHNOLOGY LABORATORIES, INC. AND MAY NOT BE USED OR DISSEMINATED EXCEPT AS PROVIDED IN THE FOREGOING SENTENCE.

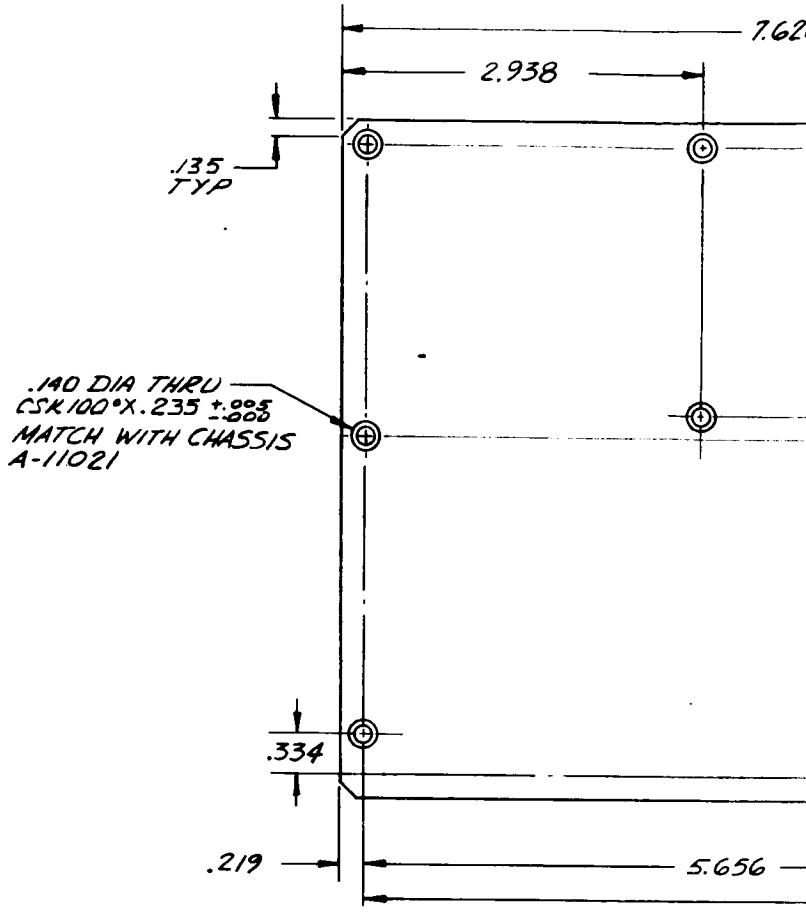

REQD PER NOTED ASSY							
CONFIGURATION							

1 DIMS TO APPLY AFTER PLATING OR CONVERSION COATING

NOTES: UNLESS OTHERWISE SPECIFIED

P6-3	
APPLICABLE SPECIFICATIONS	
THE ABOVE REFERENCED STL SPECS FORM A PART OF THIS DRAWING.	

DIETERICH-POST CLEARPRINT 1020

REVISIONS						
ZONE	SYM	DESCRIPTION	BY	DATE	CK'D	APPROVAL

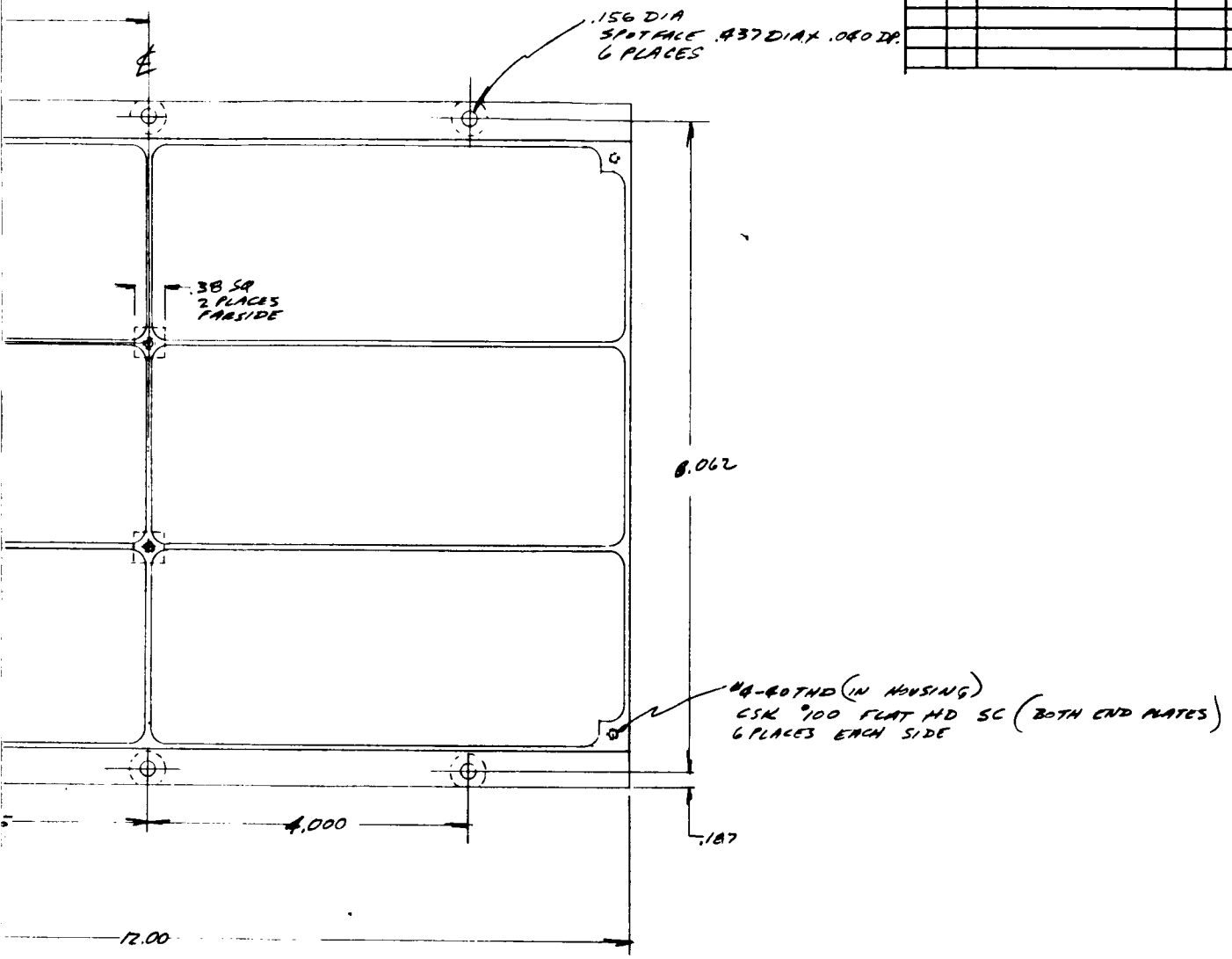

A-11025

PART NO.	PART NAME	STOCK	MATERIAL	SPEC	CKT REF	CODE IDENT	ZONE	ITEM NO.	USED ON	NEXT ASSY	NEXT ASSY	FINAL ASSY
			6061-T6 ALUM									

DESCRIPTION

REQD PER NOTED ASSY

LIST OF MATERIALS

APPLICATION

QTY REQD

CONFIGURATION

UNLESS OTHERWISE SPECIFIED

1 DIMENSIONING & TOLERANCING PER MIL-STD-8.
2 DIMENSIONS IN INCHES
TOLERANCES .XXX=±.010 .XX=±.03 .X=±.1
ANGLES ±0°30'
3 STD HOLE TOLERANCES PER AND10387.
4 ALL DIMS TO APPLY AFTER PLATING OR CONVERSION COATING.
5 REMOVE BURRS & SHARP EDGES.
6 SURFACE ROUGHNESS PER MIL-STD-10. ✓
7 RIVET CODING PER NAS 523.
8 WELD SYMBOLS PER JAN-STD-19.
9 THREADS PER MIL-STD-9, MIL-S-7742 & MIL-P-7105.
10 ELECTRICAL & ELECTRONIC SYMBOLS & REFERENCE DESIGNATIONS PER MIL-STD-15 & MIL-STD-16.

FINISH

HEAT TREAT

DO NOT SCALE DRAWING

STL APPROVALS

DRAWN	H Lower	11-14-64
CHECKED		
STRUCTURES		
MAT'LS & PROCESSES		
ENGR		
SUPERVISION		
SPECIAL		
OTHER APPROVALS		

THE FOLLOWING E.O.'S HAVE BEEN ATTACHED TO THIS PRINT

SPACE TECHNOLOGY LABORATORIES, INC.
A SUBSIDIARY OF THOMPSON RAMO WOOLDRIDGE INC.
ONE SPACE PARK • REDONDO BEACH, CALIFORNIA

MODULE, LOWER SECTION

CODE IDENT NO. 11982 | DWG SIZE D | A-11025

SCALE 1/1 | WEIGHT | SHEET

APPLICABLE SPECIFICATIONS

THE ABOVE REFERENCED STL SPECS FORM A PART OF THIS DRAWING

STL FORM FF14510 REV. 10-62

THE INFORMATION AND TECHNICAL DATA DISCLOSED BY THIS DOCUMENT MAY BE USED AND DISSEMINATED FOR THE PURPOSES AND TO THE EXTENT AUTHORIZED BY SPACE TECHNOLOGY LABORATORIES, INC. IN ANY PROPOSAL, CONTRACT OR OTHER WRITTEN INSTRUMENT. SUCH INFORMATION AND TECHNICAL DATA ARE PROPRIETARY TO SPACE TECHNOLOGY LABORATORIES, INC. AND MAY NOT BE USED OR DISSEMINATED EXCEPT AS PROVIDED IN THE FORGOING SENTENCE.

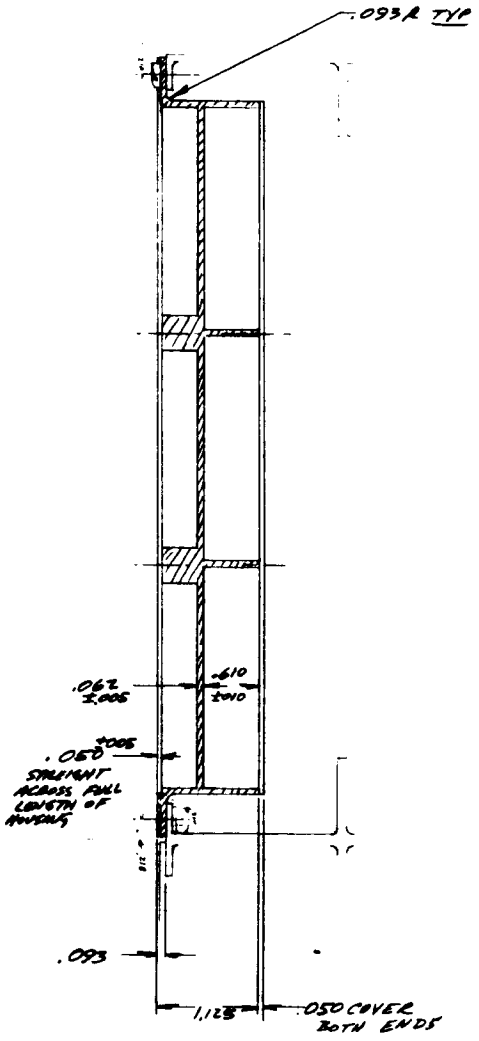

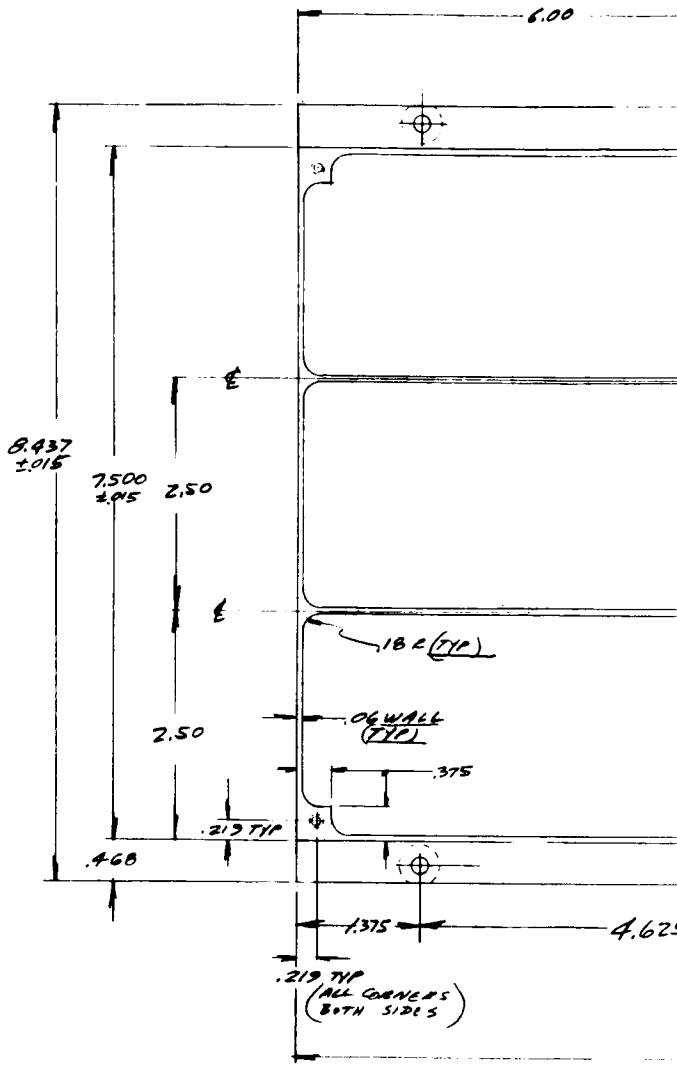

1. IDENTIFICATION MARKING IN ACCORDANCE WITH STL SPEC. PR 12-1
TYPE_____CLASS_____PART NUMBER_____

NOTES: UNLESS OTHERWISE SPECIFIED

REVISIONS						
ZONE	SYM	DESCRIPTION	BY	DATE	CK'D	APPROVAL

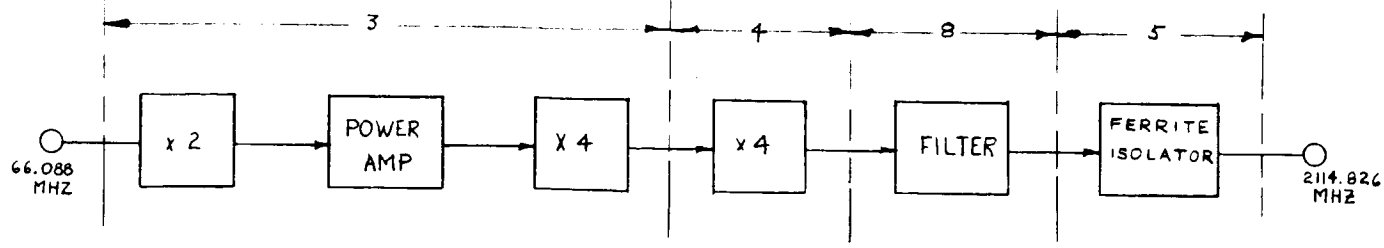

REQD PER NOTED ASSY	PART NO.	PART NAME	STOCK	MATERIAL	SPEC	CKT REF	CODE IDENT	ZONE	ITEM NO.	USED ON	NEXT ASSY	NEXT ASSY	FINAL ASSY
1	27-9	CONNECTOR		AMPHENOL					20				
2	2270	CONNECTOR, TM		GENERAL RF FITTINGS, INC.					19				
1	2265								18				
1	2252								17				
1	2222								16				
3	2215	CONNECTOR, TM							15				
1	2070	CONNECTOR, TNC							14				
1	2067								13				
2	2064	CONNECTOR, TNC							12				
2	2242	CONNECTOR, TM		GENERAL RF FITTINGS, INC.					11				
									10				
									9				
1	2115-127-6CC1	FILTER		TELONIC					8				
1	A-11029	BOTTOM COVER							7				
1	A-11028	TOP COVER							6				
1	A-11902	CIRCULATOR ASSY, 2115 MHZ							5				
1	A-11901	X4 STRIP LINE MULTIPLIER ASSY, 528.7 KHZ TO 2114.8 KHZ							4				
1	A-1900-1	CIRCUIT LAYOUT ASSY							3				
1	A-11027	MODULE							2				
		ASSY							1	AROD	A-1100	1	1

LIST OF MATERIALS — APPLICATION — QTY REQD

A11900

CONFIGURATION

UNLESS OTHERWISE SPECIFIED

1 DIMENSIONING & TOLERANCING PER MIL-STD-8.
2 DIMENSIONS IN INCHES
TOLERANCES .XXX=±.010
.XX=±.03
ANGLES ±0°30' .X=±.1
3 STD HOLE TOLERANCES PER AND10387.
4 ALL DIMS TO APPLY AFTER PLATING OR CONVERSION COATING.
5 REMOVE BURRS & SHARP EDGES.
6 SURFACE ROUGHNESS PER MIL-STD-10. ✓
7 RIVET CODING PER NAS 523.
8 WELD SYMBOLS PER JAN-STD-19.
9 THREADS PER MIL-STD-8, MIL-S-7742 & MIL-P-7105.
10 ELECTRICAL & ELECTRONIC SYMBOLS & REFERENCE DESIGNATIONS PER MIL-STD-15 & MIL-STD-16.

FINISH

HEAT TREAT

APPLICABLE SPECIFICATIONS
THE ABOVE REFERENCED STL SPECS FORM A PART OF THIS DRAWING

DO NOT SCALE DRAWING

THE FOLLOWING E.O.'S HAVE BEEN ATTACHED TO THIS PRINT

STL APPROVALS		
DRAWN	E. GREEN	11-22-63
CHECKED		
STRUCTURES		
MAT'LS & PROCESSES		
ENGR		
SUPERVISION		
SPECIAL		
OTHER APPROVALS		

SPACE TECHNOLOGY LABORATORIES, INC.
A SUBSIDIARY OF THOMPSON RAMO WOOLDRIDGE INC.
ONE SPACE PARK • REDONDO BEACH, CALIFORNIA

X32 MULTIPLIER ASSY

CODE IDENT NO.	DWG SIZE	
11982	D	A-11900

SCALE | WEIGHT | SHEET

STL FORM PP1451D REV. 10-62

THE INFORMATION AND TECHNICAL DATA DISCLOSED BY THIS DOCUMENT MAY BE USED AND DISSEMINATED FOR THE PURPOSES AND TO THE EXTENT AUTHORIZED BY SPACE TECHNOLOGY LABORATORIES, INC. IN ANY PROPOSAL, CONTRACT OR OTHER WRITTEN INSTRUMENT. SUCH INFORMATION AND TECHNICAL DATA ARE PROPRIETARY TO SPACE TECHNOLOGY LABORATORIES, INC. AND MAY NOT BE USED OR DISSEMINATED EXCEPT AS PROVIDED IN THE FOREGOING SENTENCE.

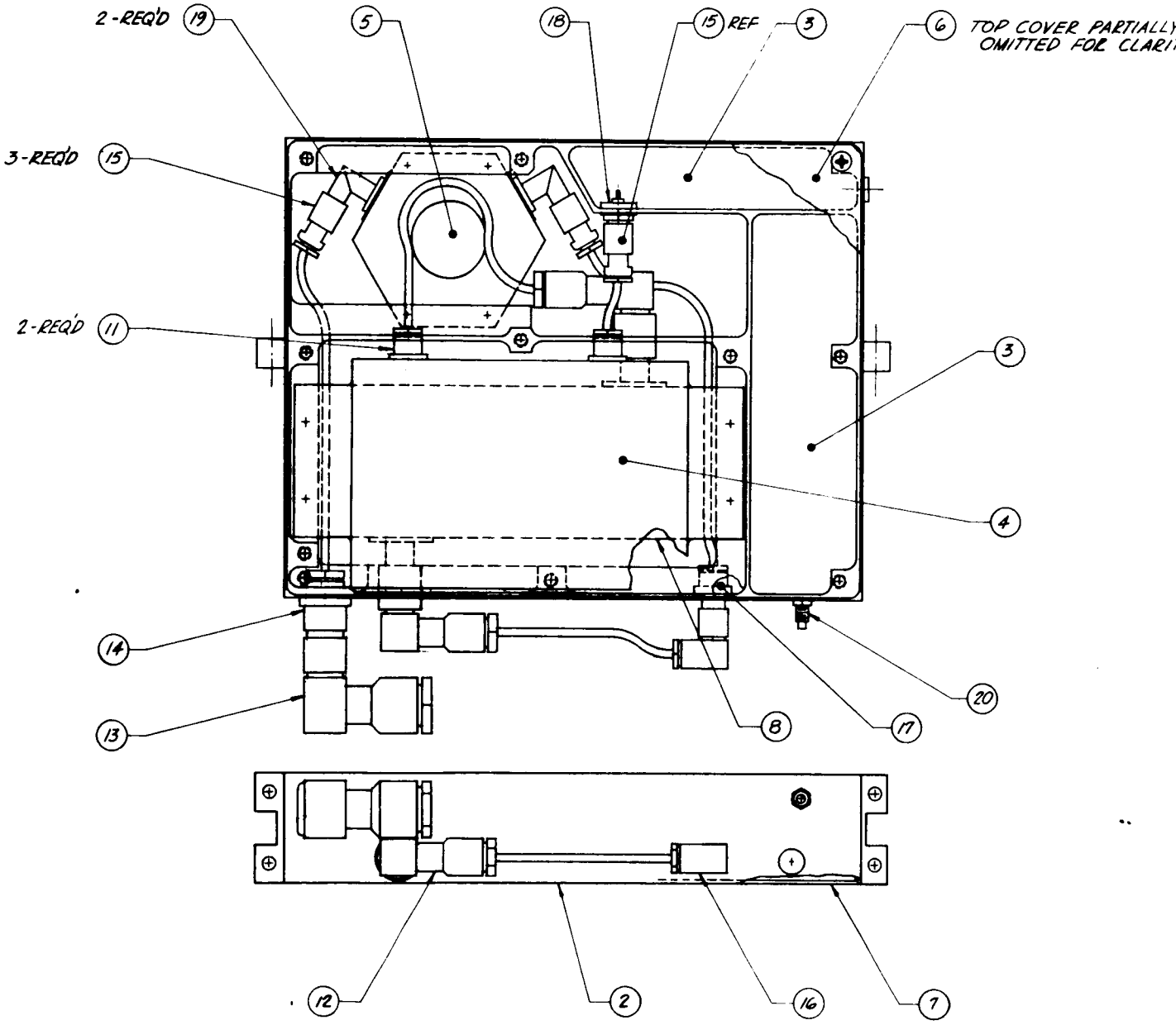

1. IDENTIFICATION MARKING IN ACCORDANCE WITH STL SPEC. PR 12-1
TYPE_____CLASS_____PART NUMBER_____

NOTES: UNLESS OTHERWISE SPECIFIED

SK A-11900-1

CHG LTR

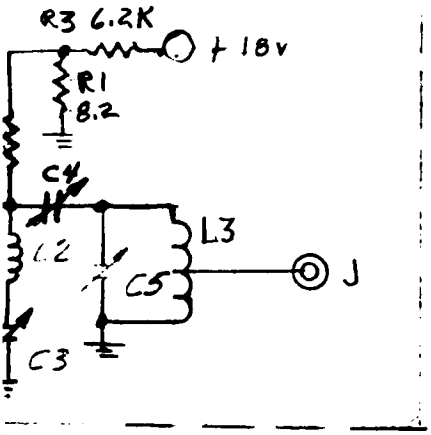

B-L1 - 7 TURNS .043 DIA SILVER PLATED WIRE
B-L2 - 3 TURNS .043 DIA SILVER PLATED WIRE
B-L3 - 2 TURNS .069 DIA SILVER PLATED WIRE
B-L1 & B-C1 = W1 = 132.2 MC
B-L2 & B-C3 = W2 = 264.4 MC
B-L3 & B-C4 = W3 = 528.8 MC

NO. REQD	MFR OR STL PART NO.	MFR	DESCRIPTION	SYM
1	4442-B-9	USECO	TERMINAL INSUL F/T	
13	4375-[illegible]2	USECO	TERMINAL INSUL S/O	
9	LT[illegible]4	STL	TERMINAL GRD	
			100Ω RESISTOR ② ONLY	A-R6
1			100Ω RESISTOR	A-R5
1	33RR1	GLENNITE	THERMISTOR ① ONLY	A-R4
2		AC DC	22uh MOLDED	A-L5,L6
1	IN[illegible]4A		DIODE ZENER	A-CR1
3	EC713	STL	COIL FORM	A-L1,5,7
2	4500	VILLEE	COIL FORM	B-L1,L2
2	EC711	STL	COIL FORM	A-L2&L4
[redacted]	[redacted]	[redacted]	[redacted]	[redacted]
~~1~~	~~PC115~~	~~FSI VARIAN~~	~~VARACTOR~~	~~B-CR1~~
1			510Ω ① RESISTOR 680Ω ②	A-R3
1		STL	HEAT SINK TO5	A-Q1
1	A-11022	STL	HEAT SINK TO18	A-Q2
1	2N2219	MOTOROLA	TRANSISTOR	A-Q2
1	2N918		TRANSISTOR	A-Q1
1		VITRAMON	.001 CAPACITOR	A-CR0
1	VY12C471J	VITRAMON	470 PF CAPACITOR	A-C4
2	FA5C 12W	ALLEN BRADLEY	.001uf FEED THRU	A-C8&C13
1	VY12C151J	VITRAMON	150PF	A-C7
1	VY12C150J		15 PF	A-C18
3	VY12C5R0J		5 PF	A-[redacted],C11,C14
2	VY12C3R0J		3 PF	A-C3,C9,[redacted],C15
1	VY12C560J	VITRAMON	~~[illegible]~~ 56 PF	A-C1
11	JMC 2950	JOHNSON	CAPACITOR A-C2,6,12,16,17,19&B-C1 THRU C5	
1			820Ω RESISTOR ① ONLY	A-R4
1			[redacted] 6.2K RESISTOR	B-R3
1			[redacted] 150K	B-R2
1			[redacted] 8.2K	B-R1
1			91Ω	A-R2
1			390Ω RESISTOR	A-R1

ORIGINATOR	DATE	TITLE	ENGINEERING SKETCH
E. GREEN		x2/PWR AMP/x4 66 MHZ-528.8 MHZ	SPACE TECHNOLOGY LABORATORIES, INC. LOS ANGELES, CALIFORNIA
MJO 4126-01-02			SK A-11900-1
			SHEET OF

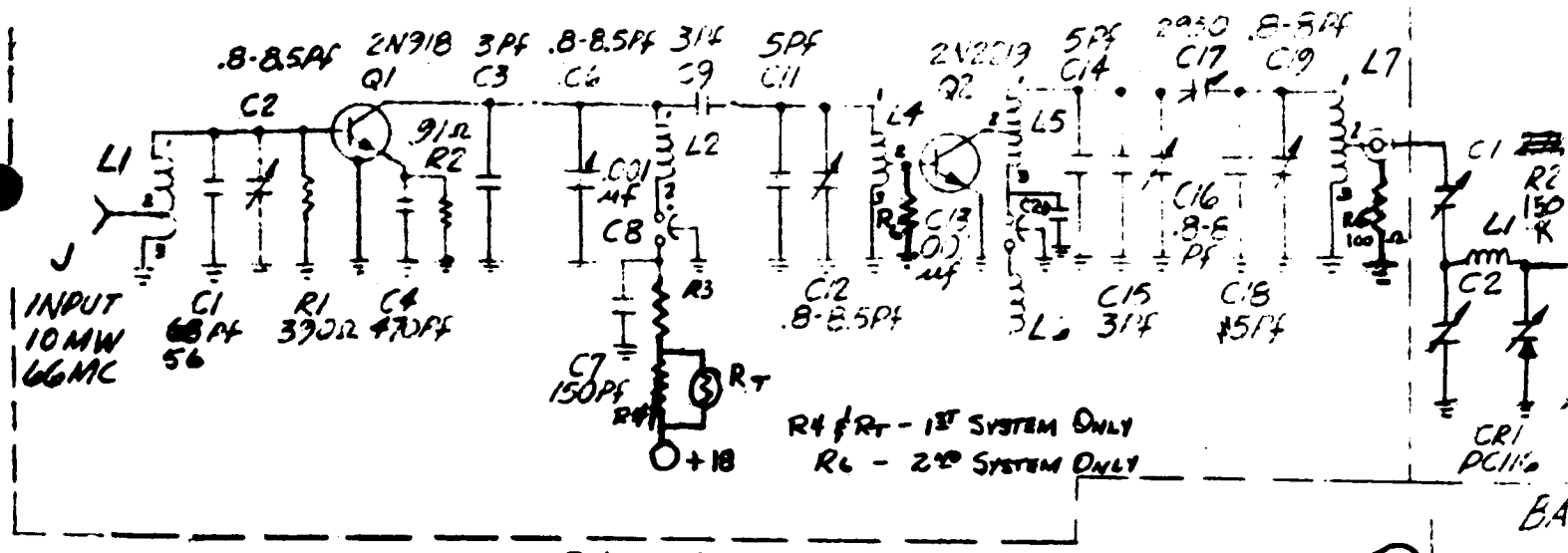

BAY-A

(66MC)
A-L1 = 0.08 uh - 4 TURNS, C.T. 1 3/4 TURNS FROM BOTTOM, #24 WIRE (WOUND OVER FULL LENGTH OF FORM)

(132MC)
A-L2 = 0.08 uh - 3 1/3 TURNS #24 WIRE (CLOSE SPACED)

(132MC)
A-L4 = 0.1 uh - 4 TURNS, C.T. 7/8 TURNS FROM BOTTOM, #24 WIRE (CLOSE SPACED)

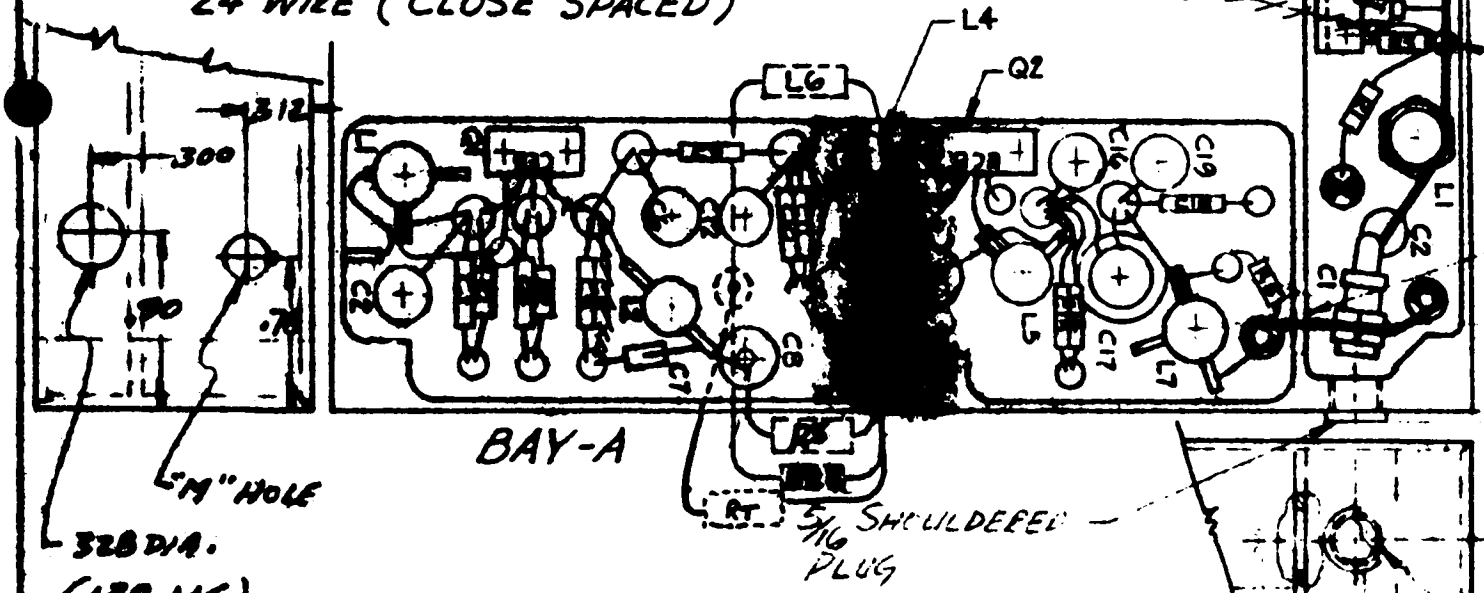

(132MC)
A-L5 = 0.08 uh - 4 TURNS, C.T. 2 TURNS FROM BOTTOM, #24 WIRE (WOUND OVER FULL LENGTH OF FORM)

(132MC
A-L7 = 0.08 uh - 4 TURNS, C.T. 1 1/2 TURNS FROM BOTTOM, #24 WIRE (WOUND OVER FULL LENGTH OF FORM)

2. ALL SLUGS REMOVED FROM COIL

1. ALL SYMBOLS ON PARTS LIST A
PREFIXED WITH BAY A OR BAY B

NOTES

SK A-11902-A | CHG LTR

.ILL & TAP #2 x 56

ORIGINATOR	DATE	TITLE	ENGINEERING SKETCH
DRAWN BY: V-Stewart	2-6-64	FERRITE ISOLATOR	SPACE TECHNOLOGY LABORATORIES, INC. LOS ANGELES, CALIFORNIA
SCALE 2:1			SK A11902-A
MJO			SHEET OF

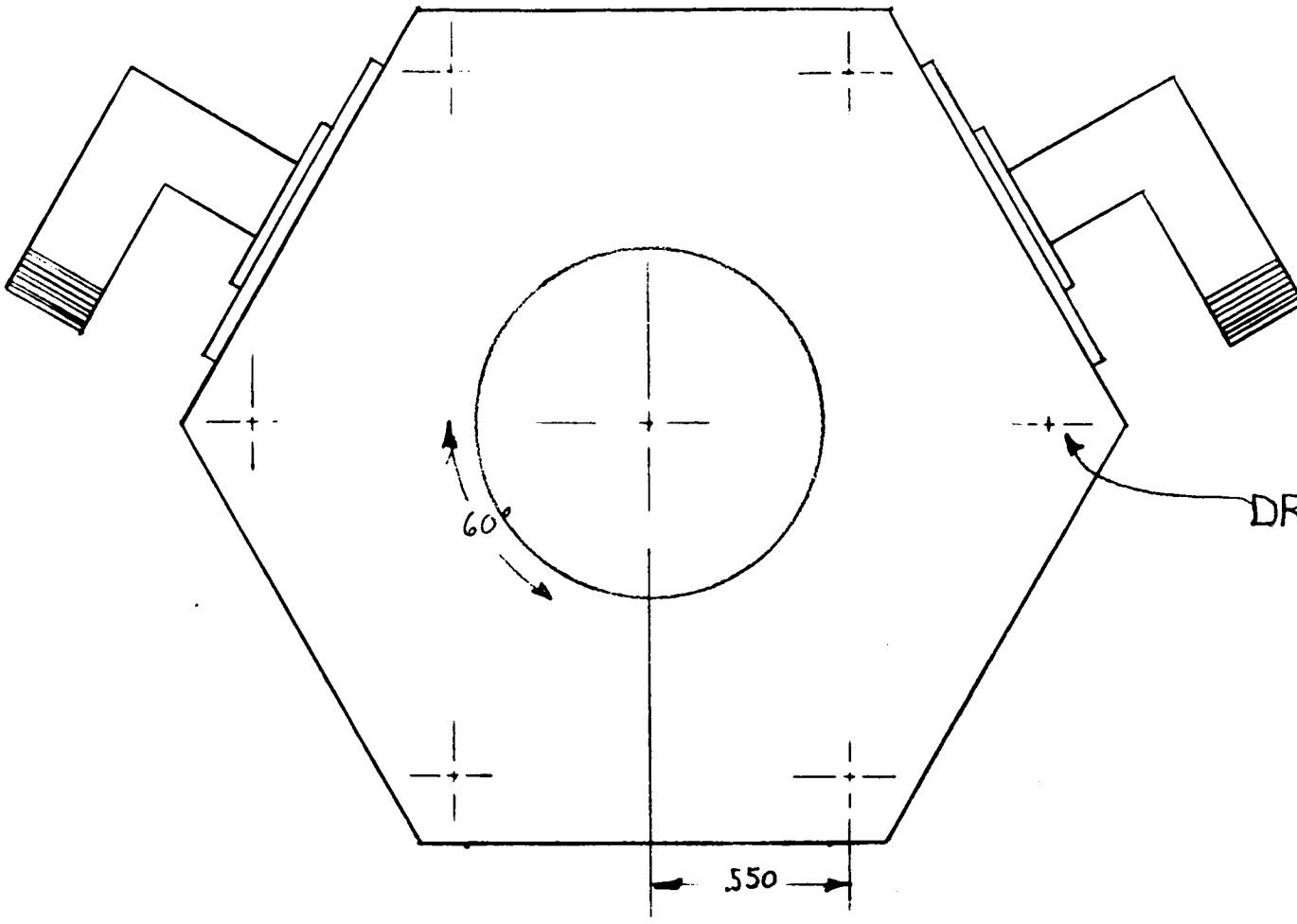
60°
DR
.550

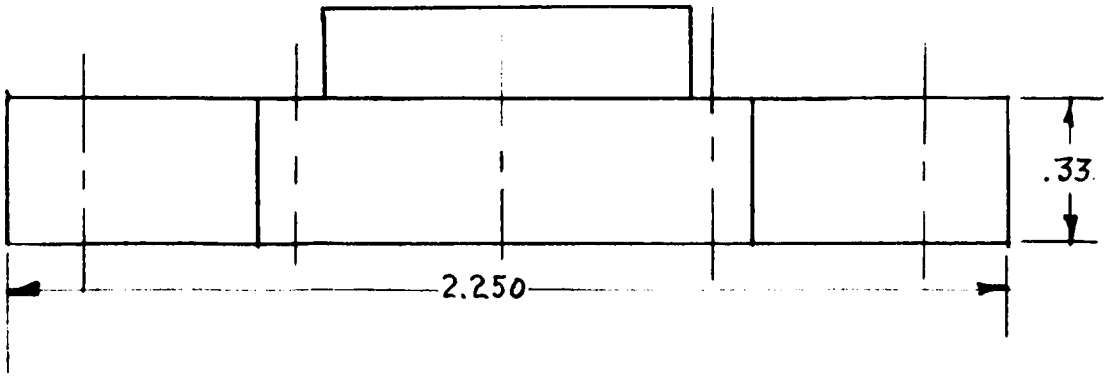
.33
2.250

REVISIONS						
ZONE	SYM	DESCRIPTION	BY	DATE	CK'D	APPROVAL

PART NO.	PART NAME	STOCK	MATERIAL	SPEC	QTY REQ	CODE IDENT	SUPPLIER NO.	USED ON	NEXT ASSY	NEXT ASSY	FINAL ASSY
		DESCRIPTION						APPLICATION		QTY REQD	

LIST OF MATERIALS

A-11002

NEED PER NOTED ASST

CONFIGURATION

UNLESS OTHERWISE SPECIFIED

1 DIMENSIONING & TOLERANCING PER MIL-STD-8.
2 DIMENSIONS IN INCHES TOLERANCES .XXX ±.010 .XX ±.03 ANGLES ±0°15' .X ±.1
3 END HOLE TOLERANCES PER ANSI B32.
4 ALL DIMS TO APPLY AFTER PLATING OR EQUIVALENT COATING.
5 REMOVE BURRS & SHARP EDGES.
6 DEBURR REMOVE. NEED PER MIL-STD-10. ✓
7 SHAFT CHAMFER PER NAS 523.
8 WELD SYMBOLS PER ANSI-STD-22.
9 THREADS PER MIL-STD-8, MIL-S-7742 & MIL-A-703.
10 ELECTRICAL & ELECTRONIC SYMBOLS & REFERENCE DESIGNATIONS PER MIL-STD-15 & MIL-STD-16.

APPLICABLE SPECIFICATIONS
THE ABOVE SUPERSEDES FOR SPECS NOTED IN PART OF THIS DRAWING

FINISH

HEAT TREAT

DO NOT SCALE DRAWING

STL APPROVALS

DRAWN	E GREEN	12-9-65
CHECKED		
STRUCTURES		
SHOPS & PROCESSES		
SHOP		
SUPERVISION		
SPECIAL		
OTHER APPROVALS		

THE FOLLOWING E.O.'S HAVE BEEN ATTACHED TO THIS PRINT

SPACE TECHNOLOGY LABORATORIES, INC.
A SUBSIDIARY OF THOMPSON RAMO WOOLDRIDGE INC.
ONE SPACE PARK • REDONDO BEACH, CALIFORNIA

MASTER OSC & FREQ SYN
FINAL ASSY

CODE IDENT NO.	DWG SIZE	
11982	J	A-11002

SCALE | WEIGHT | SHEET

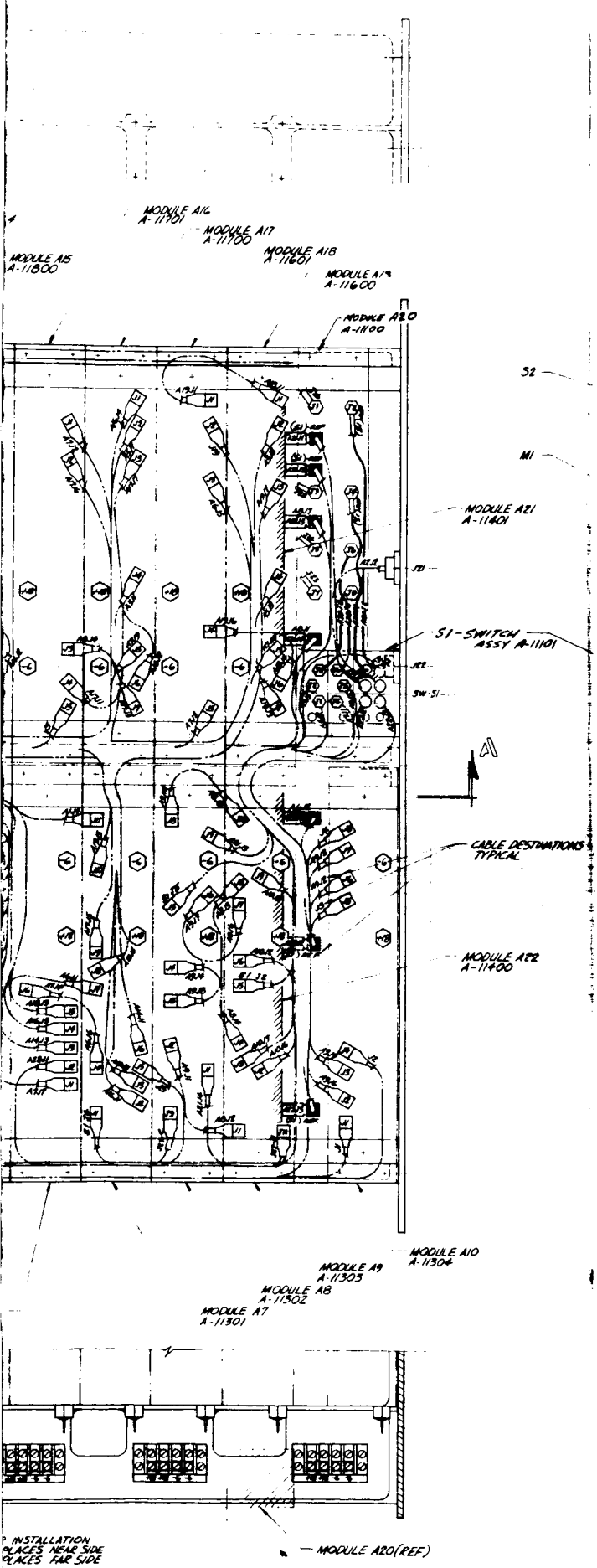
MODULE A16
A-11701
MODULE A17
A-11700
MODULE A18
A-11601
MODULE A15
A-11800
MODULE A19
A-11600
MODULE A20
A-11100
MODULE A21
A-11401
J21
S1 - SWITCH
ASSY A-11101
J22
SW-S1
CABLE DESTINATIONS
TYPICAL
MODULE A22
A-11400
MODULE A10
A-11304
MODULE A9
A-11303
MODULE A8
A-11302
MODULE A7
A-11301
INSTALLATION
PLACES NEAR SIDE
PLACES FAR SIDE
MODULE A20(REF)

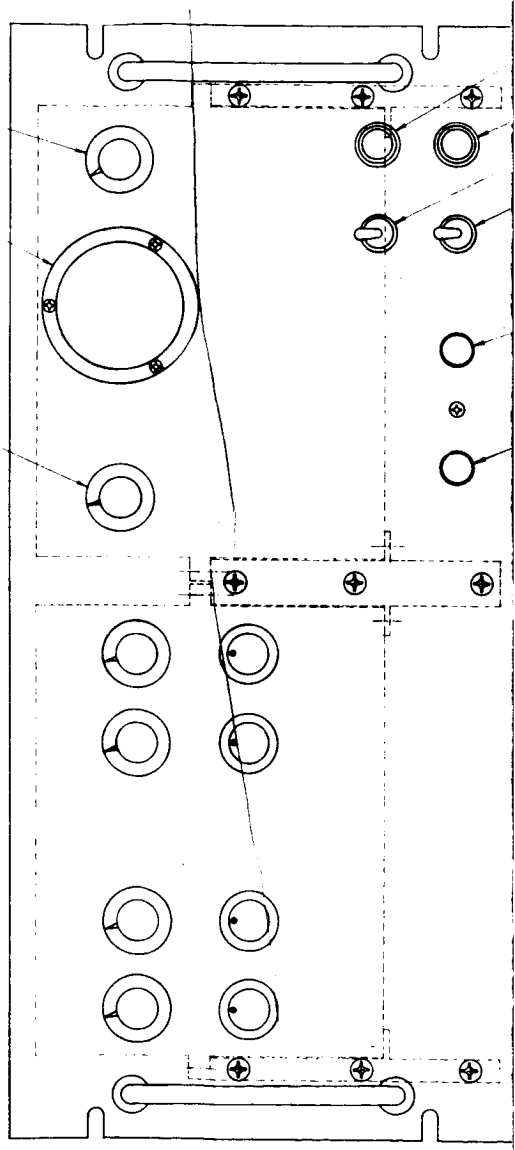
S2
M1

THE INFORMATION AND TECHNIQUE DATA DISCLOSED BY THIS DOCUMENT MAY BE MADE AND DISSEMINATED FOR THE PURPOSES AND TO THE EXTENT AUTHORIZED BY SPACE TECHNOLOGY LABORATORIES, INC. IN ANY PROPOSAL, CONTRACT OR OTHER WRITTEN INSTRUMENT. SUCH INFORMATION AND TECHNIQUE DATA ARE PROPRIETARY TO SPACE TECHNOLOGY LABORATORIES, INC. AND MAY NOT BE USED OR DISCLOSED EXCEPT AS PROVIDED IN THE PARAGRAPH PROVIDING.

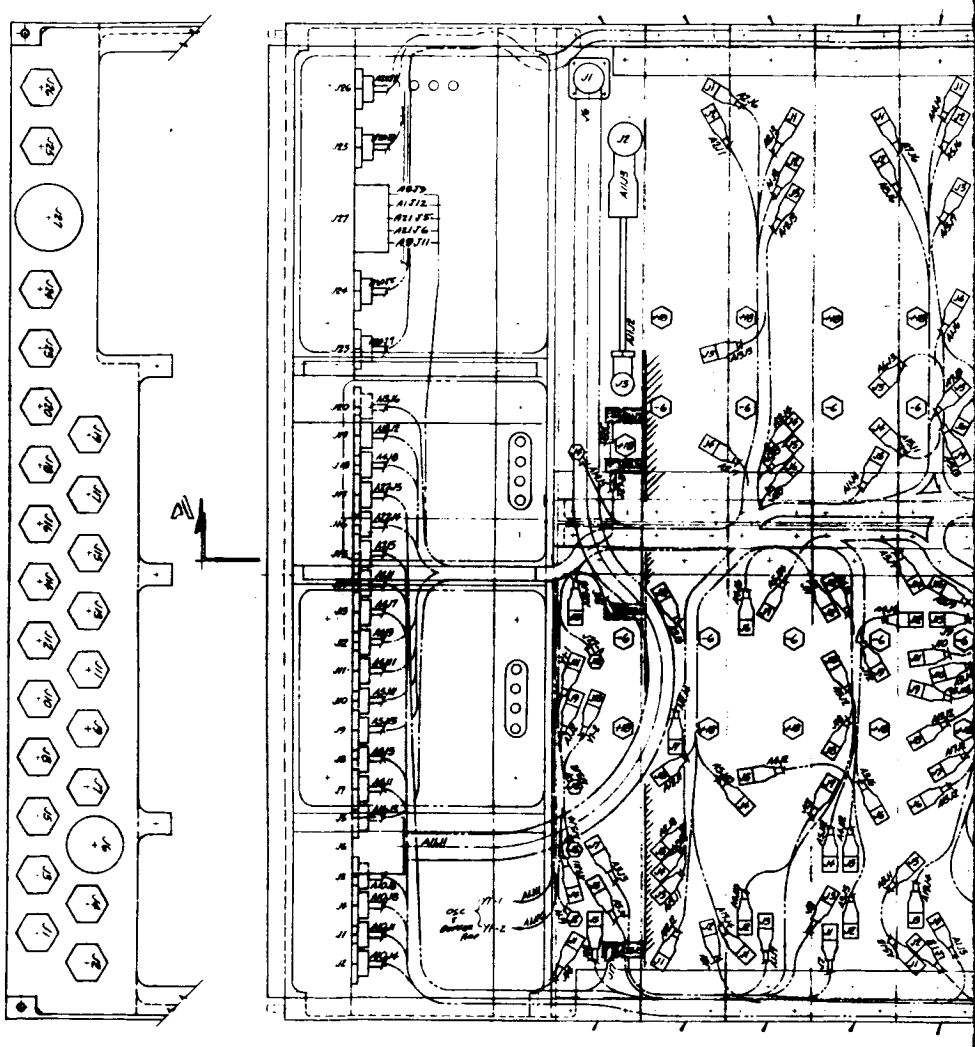

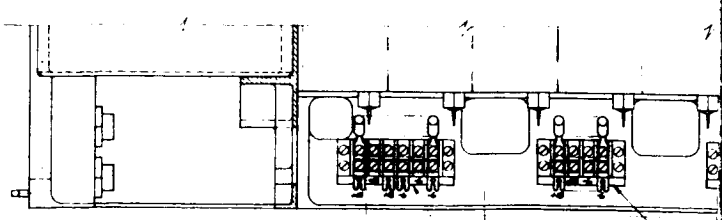

SECTION A - A

TYP INSTALLATION
1-PLACE NEAR SIDE
1-PLACE FAR SIDE

REVISIONS						
ZONE	SYM	DESCRIPTION	BY	DATE	CK'D	APPROVAL

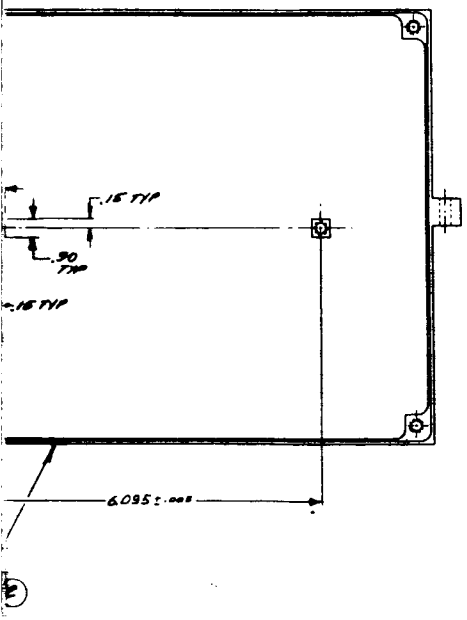

REQD PER NOTED ASSY	PART NO.	PART NAME	STOCK	MATERIAL	SPEC	CRT REF	CODE IDENT	ZONE	ITEM NO.	USED ON	NEXT ASSY	NEXT ASSY	FINAL ASSY
			DESCRIPTION							APPLICATION		QTY REQD	
2	3585-06CN-207 HELI-COIL	INSERT							4				
18	3585-04CN-168 HELI-COIL	INSERT							3				
1	-2	MODULE	8.50X6.00X1.50	6061-T6 ALALY					2				
	-1	ASSY							1				

LIST OF MATERIALS

A11010 C

CONFIGURATION

P6-3
APPLICABLE SPECIFICATIONS
THE ABOVE REFERENCED STL SPECS FORM A PART OF THIS DRAWING

UNLESS OTHERWISE SPECIFIED
1 DIMENSIONING & TOLERANCING PER MIL-STD-8.
2 DIMENSIONS IN INCHES
TOLERANCES .XX=±.010 .XXX=±.005 X=±.1
ANGLES=±0°30'
3 STD HOLE TOLERANCES PER AND[illegible].
4 ALL DIMS TO APPLY AFTER PLATING OR CONVERSION COATING.
5 REMOVE BURRS & SHARP EDGES.
6 SURFACE ROUGHNESS PER MIL-STD-10. 125
7 RIVET CODING PER NAS 523.
8 WELD SYMBOLS PER JAN-STD-19.
9 THREADS PER MIL-STD-8, MIL-S-7742 & MIL-F-7181.
10 ELECTRICAL & ELECTRONIC SYMBOLS & REFERENCE DESIGNATIONS PER MIL-STD-15 & MIL-STD-16.

FINISH
ELECTROLESS NICKEL .001 THK PER STL P6-3 CLASS 1

HEAT TREAT
NORMALIZE BEFORE FINAL MACHINING

DO NOT SCALE DRAWING

THE FOLLOWING E.O.'S HAVE BEEN ATTACHED TO THIS PRINT

STL APPROVALS

DRAWN	I. NACEIS	8-30-63
CHECKED	[illegible]	9-13-63
STRUCTURES		
MAT'LS & PROCESSES		
ENGR	H. LOWEN	9/10/63
SUPERVISION		
SPECIAL		
OTHER APPROVALS		

SPACE TECHNOLOGY LABORATORIES, INC.
A SUBSIDIARY OF THOMPSON RAMO WOOLDRIDGE INC.
ONE SPACE PARK • REDONDO BEACH, CALIFORNIA

MODULE, FREQUENCY SYNTHESIZER

CODE IDENT NO.	DWG SIZE	
11982	H	A11010
SCALE 1/1	WEIGHT	SHEET 1 OF 1

MJD 9126-01-01

STL FORM 1482H-04 REV. 10-62

THE INFORMATION AND TECHNICAL DATA DISCLOSED BY THIS DOCUMENT MAY BE USED AND DISSEMINATED FOR THE PURPOSES AND TO THE EXTENT APPROVED BY SPACE TECHNOLOGY LABORATORIES, INC. IN ANY PROPOSAL, CONTRACT OR OTHER WRITTEN INSTRUMENT. SUCH INFORMATION AND TECHNICAL DATA ARE PROPRIETARY TO SPACE TECHNOLOGY LABORATORIES, INC. AND MAY NOT BE USED OR DISSEMINATED EXCEPT AS PROVIDED IN THE FOREGOING INSTRUMENT.

DRAWING NO. 01011A

SHEET 1 OF 1

3. SATIN FINISH (LIQUID HONE) EXTERNAL SURFACES TO BLEND OR REMOVE TOOL MARKINGS.

2 — DIMS. TO APPLY AFTER PLATING OR CONVERSION COATING.

1. IDENTIFICATION MARKING IN ACCORDANCE WITH STL SPEC. PR 12-1
TYPE____ CLASS____ PART NUMBER_____

NOTES: UNLESS OTHERWISE SPECIFIED

REVISIONS					
SYM	DESCRIPTION	BY	DATE	CK'D	APPROVAL

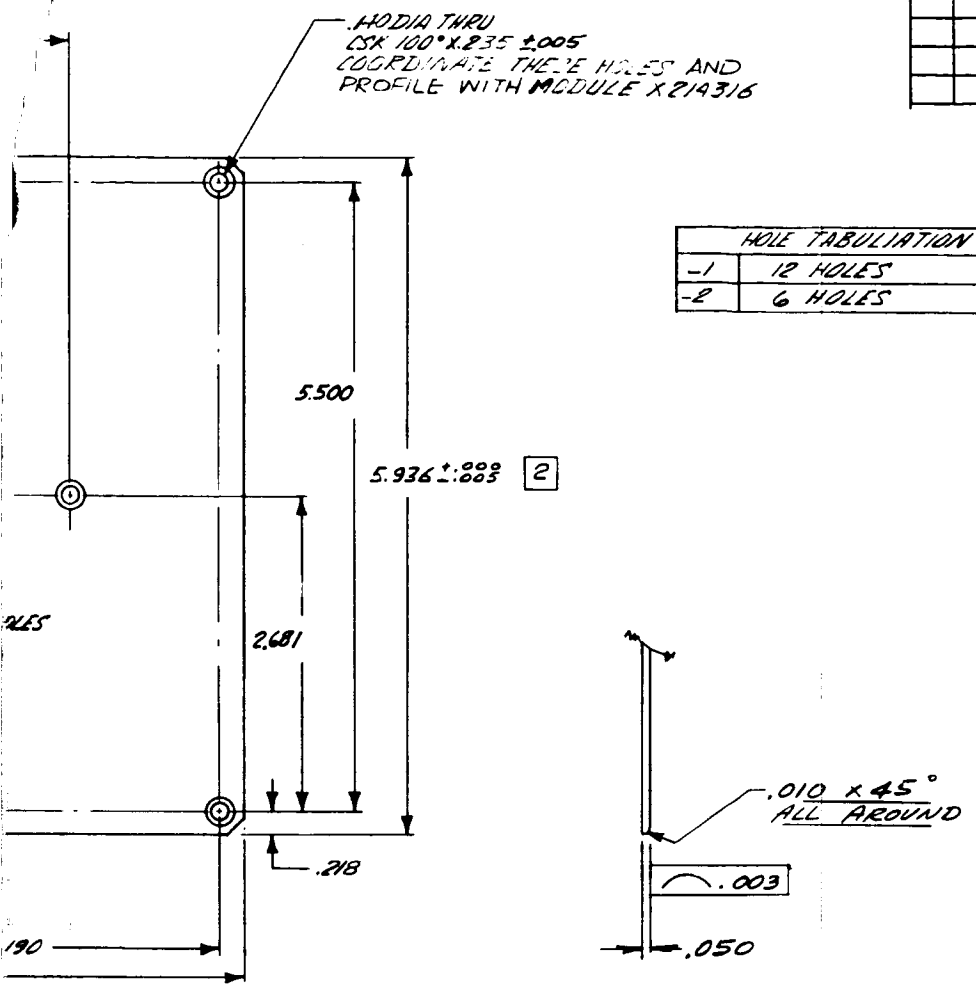

HOLE TABULATION	
-1	12 HOLES
-2	6 HOLES

A11011

B

PART NO.	PART NAME	STOCK	MATERIAL	SPEC	CKT REF	CODE IDENT	ZONE	ITEM NO.	USED ON	NEXT ASSY	NEXT ASSY	FINAL ASSY
	COVER	.050 SHT	6061-T6 AL ALY					2				
	COVER	.050 SHT	6061-T6 AL ALY					1		A11010	1(-2)	
										A11010	1(-1)	

DESCRIPTION

LIST OF MATERIALS — APPLICATION — QTY REQD

UNLESS OTHERWISE SPECIFIED

1. DIMENSIONING & TOLERANCING PER MIL-STD-8.
2. DIMENSIONS IN INCHES
   TOLERANCES .XXX=±.010 .XX=±.03 .X=±.1
   ANGLES ±0°30'
3. STD HOLE TOLERANCES PER AND10387.
4. ALL DIMS TO APPLY AFTER PLATING OR CONVERSION COATING.
5. REMOVE BURRS & SHARP EDGES.
6. SURFACE ROUGHNESS PER MIL-STD-10. ✓
7. RIVET CODING PER NAS 523.
8. WELD SYMBOLS PER JAN-STD-19.
9. THREADS PER MIL-STD-9, MIL-S-7742 & MIL-P-7105.
10. ELECTRICAL & ELECTRONIC SYMBOLS & REFERENCE DESIGNATIONS PER MIL-STD-15 & MIL-STD-16.

FINISH: ELECTROLESS NICKEL .001 THK PER STL SPEC. P6-3 CLASS I

HEAT TREAT

DO NOT SCALE DRAWING

THE FOLLOWING E.O.'S HAVE BEEN ATTACHED TO THIS PRINT

STL APPROVALS		
DRAWN	I. HARRIS	8-28-63
CHECKED	[illegible]	9-13-63
STRUCTURES		
MAT'LS & PROCESSES		
ENGR	H. LOWEN	9/9/63
SUPERVISION		
SPECIAL		
OTHER APPROVALS		

SPACE TECHNOLOGY LABORATORIES, INC.
A SUBSIDIARY OF THOMPSON RAMO WOOLDRIDGE INC.
ONE SPACE PARK • REDONDO BEACH, CALIFORNIA

COVER, MODULE - FREQUENCY SYNTHESIZER

CODE IDENT NO.	DWG SIZE	
11982	C	A11011

SCALE 1/1 WEIGHT SHEET 1 OF 1

STL FORM 1451C REV. 10-62

MJO 4126-01-01

THE INFORMATION AND TECHNICAL DATA DISCLOSED BY THIS DOCUMENT MAY BE USED AND DISSEMINATED FOR THE PURPOSES AND TO THE EXTENT AUTHORIZED BY SPACE TECHNOLOGY LABORATORIES, INC. IN ANY PROPOSAL, CONTRACT OR OTHER WRITTEN INSTRUMENT. SUCH INFORMATION AND TECHNICAL DATA ARE PROPRIETARY TO SPACE TECHNOLOGY LABORATORIES, INC. AND MAY NOT BE USED OR DISSEMINATED EXCEPT AS PROVIDED IN THE FOREGOING SENTENCE.

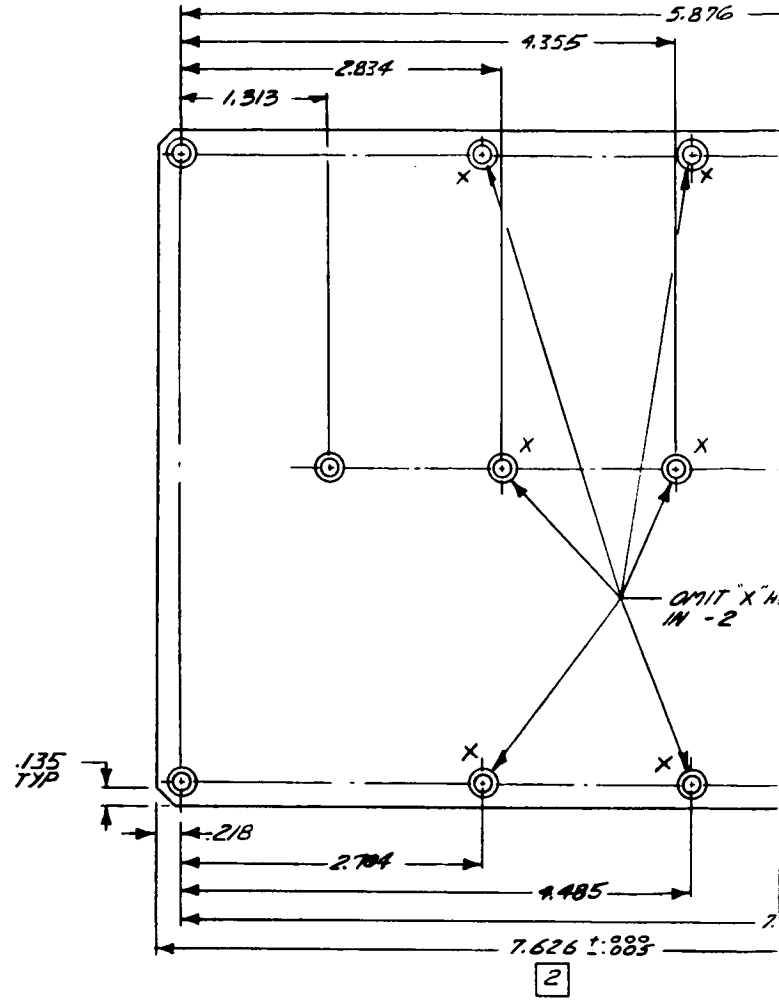

							1
							1
						-2	-1
REQD	PER	NOTED	ASSY				
CONFIGURATION							

2 — DIMS. TO APPLY AFTER PLATING OR CONVERSION COATING

1. IDENTIFICATION MARKING IN ACCORDANCE WITH STL SPEC. PR 12-1 TYPE_____ CLASS_____ PART NUMBER_____

P6-3	
APPLICABLE SPECIFICATIONS	
THE ABOVE REFERENCED STL SPECS FORM A PART OF THIS DRAWING	

NOTES: UNLESS OTHERWISE SPECIFIED

DIETERICH-POST CLEARPRINT 1020

REVISIONS						
ZONE	SYM	DESCRIPTION	BY	DATE	CK'D	APPROVAL

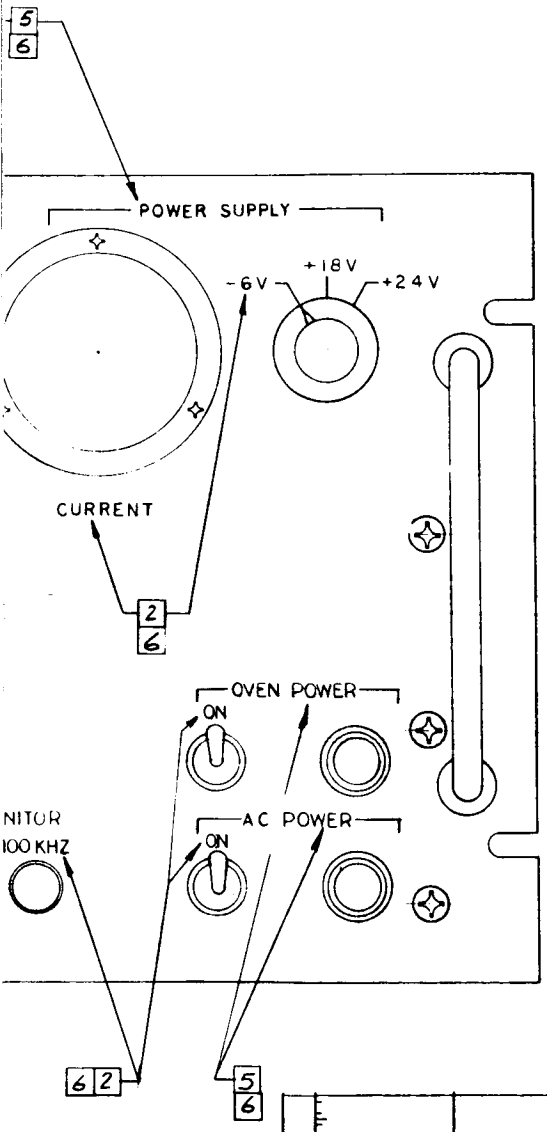

A11012

A

REQD PER NOTED ASSY	PART NO.	PART NAME	STOCK	MATERIAL	SPEC	CKT REF	CODE IDENT	ZONE	ITEM NO.	USED ON	NEXT ASSY	NEXT ASSY	FINAL ASSY
			DESCRIPTION							AROD			
CONFIGURATION	LIST OF MATERIALS									APPLICATION		QTY REQD	

UNLESS OTHERWISE SPECIFIED

1 DIMENSIONING & TOLERANCING PER MIL-STD-8.
2 DIMENSIONS IN INCHES
TOLERANCES .XXX=±.010
.XX=±.03
.X=±.1
ANGLES ±0°30'
3 STD HOLE TOLERANCES PER AND10007.
4 ALL DIMS TO APPLY AFTER PLATING OR CONVERSION COATING.
5 REMOVE BURRS & SHARP EDGES.
6 SURFACE ROUGHNESS PER MIL-STD-10. ✓
7 RIVET CODING PER NAS 523.
8 WELD SYMBOLS PER JAN-STD-19.
9 THREADS PER MIL-STD-8, MIL-S-7742 & MIL-P-7105.
10 ELECTRICAL & ELECTRONIC SYMBOLS & REFERENCE DESIGNATIONS PER MIL-STD-15 & MIL-STD-16.

FINISH: 7

HEAT TREAT

DO NOT SCALE DRAWING

THE FOLLOWING E.O.'S HAVE BEEN ATTACHED TO THIS PRINT

STL APPROVALS

DRAWN	S.B.	
CHECKED	[illegible]	11-29-62
STRUCTURES		
MAT'LS & PROCESSES		
ENGR	C. B. COULBOURN	11-29-62
SUPERVISION		
SPECIAL		
OTHER APPROVALS		

SPACE TECHNOLOGY LABORATORIES, INC.
A SUBSIDIARY OF THOMPSON RAMO WOOLDRIDGE INC.
ONE SPACE PARK • REDONDO BEACH, CALIFORNIA

PANEL DETAIL
MASTER OSCILLATOR & FREQUENCY SYNTHESIZER
(ENGRAVING)

CODE IDENT NO.	DWG SIZE	
11982	D	A-11012

SCALE | WEIGHT | SHEET

APPLICABLE SPECIFICATIONS
THE ABOVE REFERENCED STL SPECS FORM A PART OF THIS DRAWING

STL FORM FF14250 REV. 10-62

THE INFORMATION AND TECHNICAL DATA DISCLOSED BY THIS DOCUMENT MAY BE USED AND DISSEMINATED FOR THE PURPOSES AND TO THE EXTENT AUTHORIZED BY SPACE TECHNOLOGY LABORATORIES, INC. IN ANY PROPOSAL, CONTRACT OR OTHER WRITTEN INSTRUMENT. SUCH INFORMATION AND TECHNICAL DATA ARE PROPRIETARY TO SPACE TECHNOLOGY LABORATORIES, INC. AND MAY NOT BE USED OR DISSEMINATED EXCEPT AS PROVIDED IN THE FOREGOING SENTENCE.

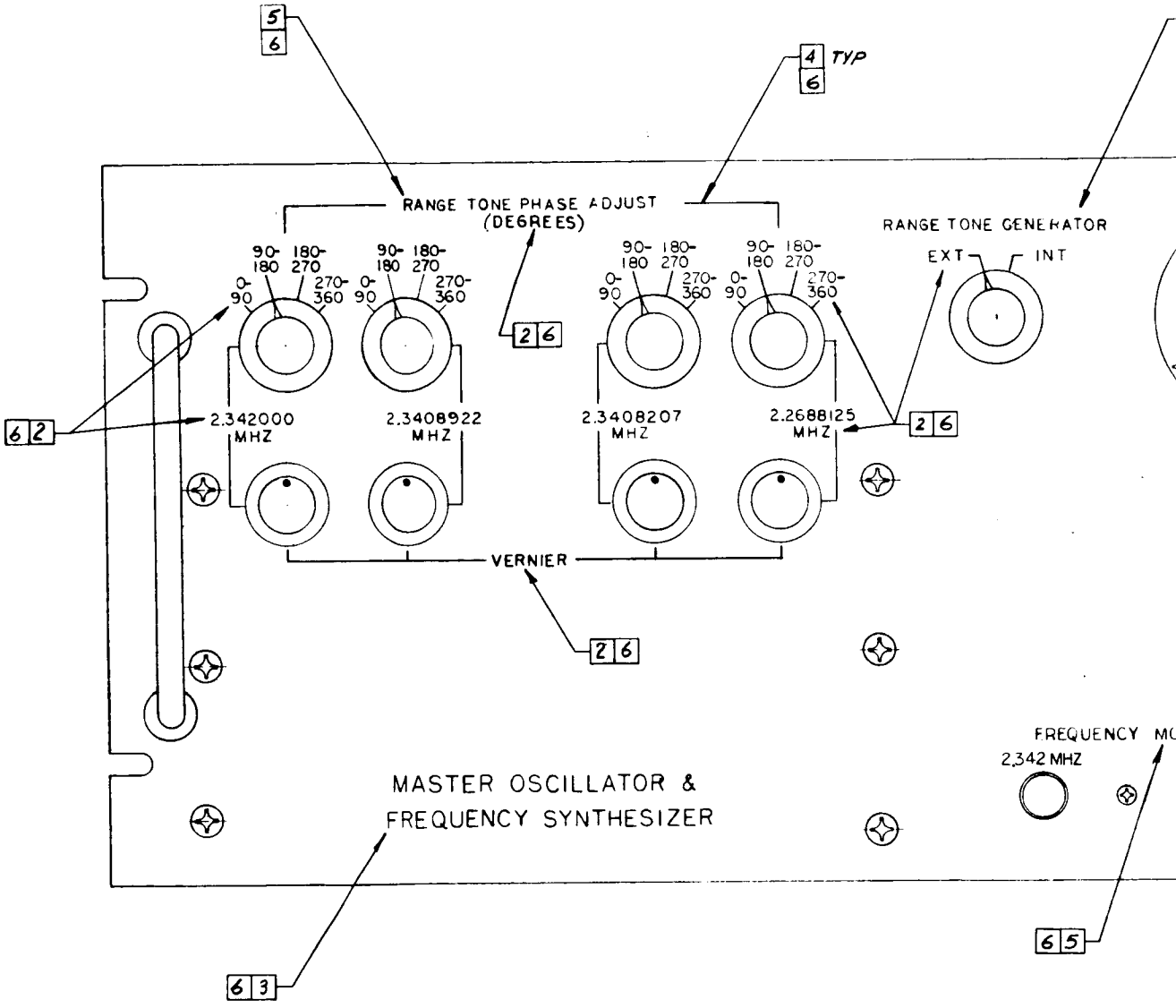

5 ENGRAVE CHARACTERS .18 HIGH CENTERED ABOUT RELATE ITEMS AS SHOWN.

4 ENGRAVE LINES .02 WIDE LOCATED ABOUT RELATED ITEMS APPROX AS SHOWN.

3 ENGRAVE CHARACTERS .25 HIGH CENTERED ABOUT RELATED ITEMS APPROX AS SHOWN.

2 ENGRAVE CHARACTERS .12 HIGH CENTERED ABOUT RELATED ITEMS APPROX AS SHOWN.

1. IDENTIFICATION MARKING IN ACCORDANCE WITH STL SPEC. PR 12-1
TYPE I CLASS III PART NUMBER _____

NOTES: UNLESS OTHERWISE SPECIFIED

7 CHEMICAL FILM PER STL SPEC P2-1, COLORLESS, UNDER ONE COAT ZINC CHROMATE PRIMER PER MIL-P-8585. APPLY ONE COAT OF DARK GRAY METALIC ENAMEL, SEMI GLOSS FINISH TYPE CARDINAL #530-9224, OR EQUIV.

6 ENGRAVE ALL CHARACTERS PER STL SPEC PR12-1, TYPE I, CLASS 3, BLACK FILL WHITE TFE-529 COLOR NO. 27038 PER FED STD 595

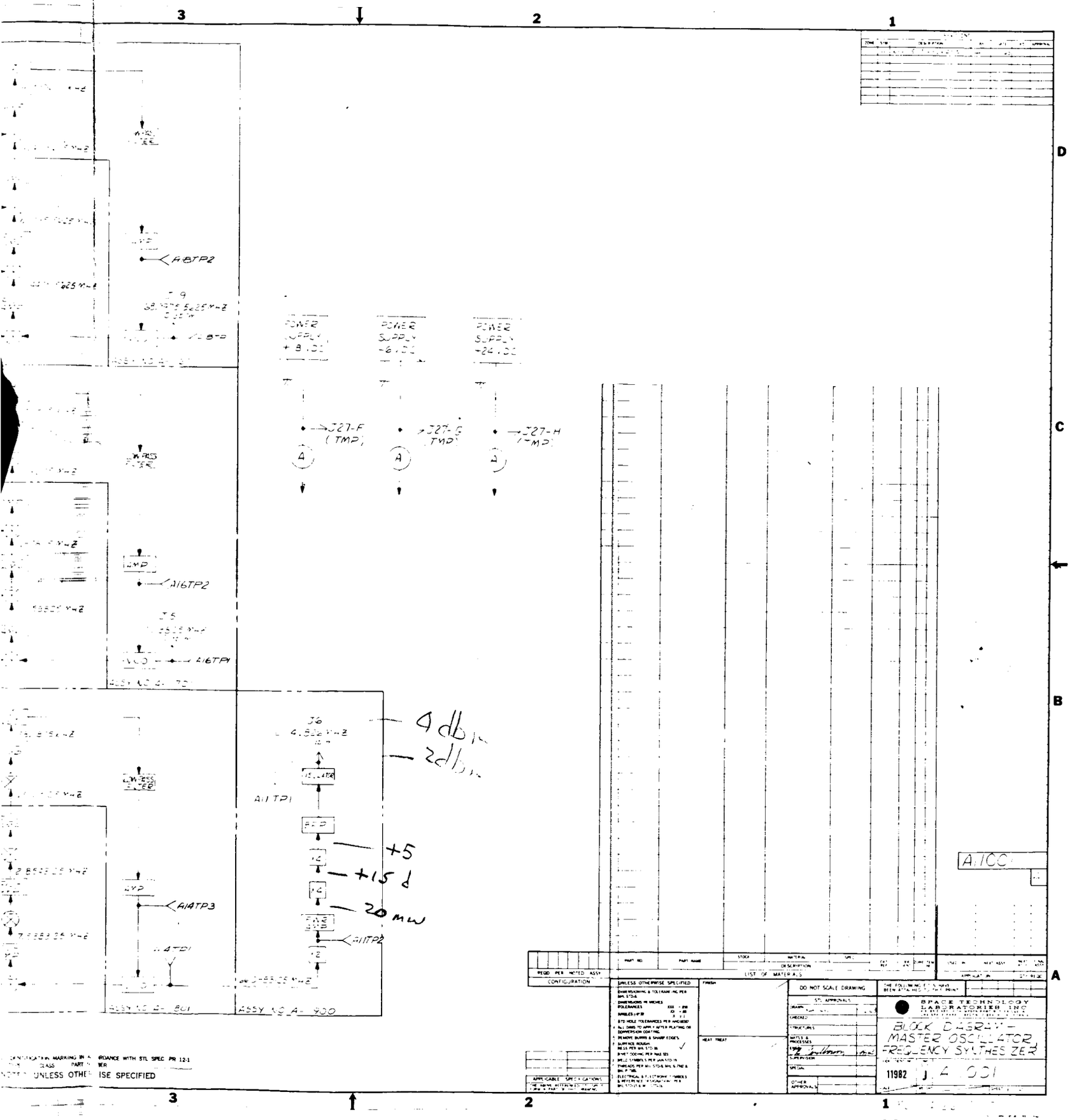

POWER SUPPLY +8 VDC
POWER SUPPLY -6 VDC
POWER SUPPLY +24 VDC
J27-F (TMP)
J27-G (TMP)
J27-H (TMP)
A18TP2
A16TP2
A16TP1
A14TP3
A11TP1
A11TP2
4 db
2 db
+5
+15 d
20 mw
ASSY NO A- 900
A1100
LIST OF MATERIALS
DO NOT SCALE DRAWING
SPACE TECHNOLOGY LABORATORIES INC
BLOCK DIAGRAM - MASTER OSCILLATOR FREQUENCY SYNTHESIZER
11982

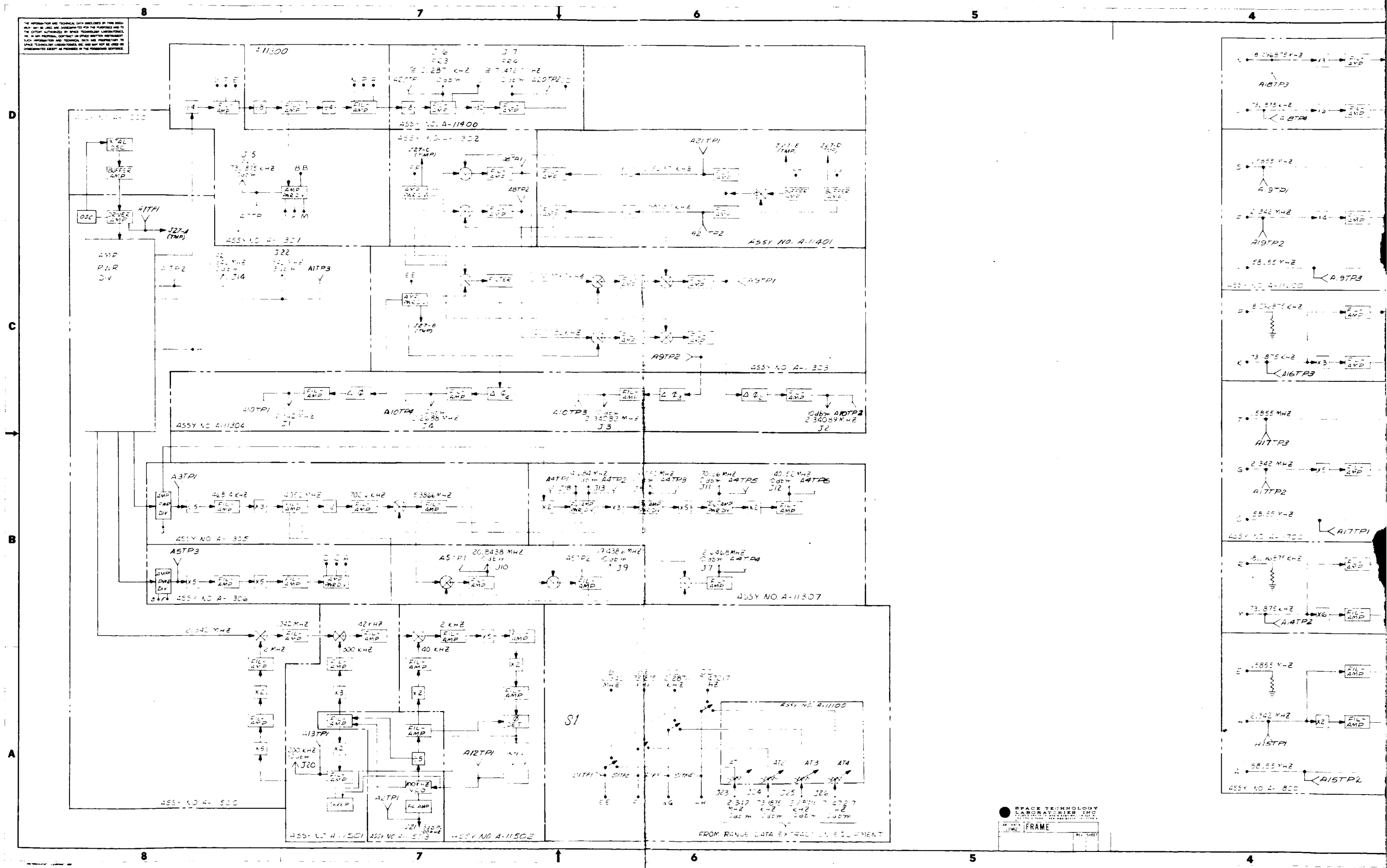

ASSY NO. A-11400
ASSY NO. A-11401
ASSY NO. A-11303
ASSY NO. A-11304
ASSY NO. A-11305
ASSY NO. A-11306
ASSY NO. A-11307
ASSY NO. A-11100
ASSY NO. A-11502
FROM RANGE DATA EXTRACTION EQUIPMENT
S1
SPACE TECHNOLOGY LABORATORIES INC
FRAME