FACILITY FORM 602

N64-29564
(ACCESSION NUMBER)

21
(PAGES)

CR-56508
(NASA CR OR TMX OR AD NUMBER)

(THRU)

1
(CODE)

M
(CATEGORY)

21p

[redacted]

EXPERIMENTAL TOOL PROGRAM

[redacted]

OTS PRICE

XEROX $ 2.60 ph

MICROFILM $ _____

NSP-63-64
21 May 1963

RIFT Manufacturing Engineering Working Group Meeting
NSP Presentation

EXPERIMENTAL TOOL PROGRAM

Prepared Under Contract No. NAS 8-5600

NUCLEAR SPACE PROGRAMS – LOCKHEED MISSILES & SPACE COMPANY
Sunnyvale, California

EXPERIMENTAL TOOL PROGRAM

The RIFT Experimental Tool Program has been initiated so that Manufacturing problems can be resolved prior to actual hardware manufacture. Additionally, proving of tooling concepts through this program can be accomplished with maximum economy and minimum schedule impact.

The program will provide full-size tool support, under factory conditions, for the Manufacturing Development Program. In so doing, shop personnel are provided an early means of bridging the gap between laboratory theory and practical application of processes, procedures, and techniques.

Realizing the importance of the welding-process development, an experimental weld fixture has been programmed which duplicates the more critical bulkhead-barrel and horizontal-girth weld areas. Work is in process on both the design and fabrication of this tool.

It is planned to utilize the tool to study problem areas during construction and, in turn, during support functions involved with the Weld Development Program. Some of the areas of investigation are:

- Foundation or base requirements
- Tool rigidity requirements
- Module definition and description
- Temperature effect on structure (draft control, convection heating from welding and its counteraction, air-conditioning requirements, etc.)
- "Weld traveler" configuration (welding, trim, and X-ray)

The design activity for the "up and over" boom has been completed, and the boom is ready for manufacture.

The basic structure has been erected and backup bar assemblies are in process of manufacture. Girth and side-beam tracks have been erected to accommodate the weld and router travelers, and both units are ready for validation.

PROGRAM OBJECTIVES

- FOUNDATIONS OR BASE REQUIREMENTS
- TOOL RIGIDITY REQUIREMENTS
- BASIC TOOL STRUCTURE (MODULE DEFINITION AND DESCRIPTION)
- TEMPERATURE EFFECT ON STRUCTURE (DRAFT CONTROL, CONVECTION HEATING BY WELDING, ETC.)
- WELD TRAVELER CONFIGURATION (WELDING, X-RAY AND TRIM)
- WELD TRAVELER ARM OR TRACK CONFIGURATION
- WELD TRAVELER ARM POSITIONING OR INDEX
- TRIMMING METHOD, INCLUDING PART INDEX
- PART SUPPORT
- JOINT SUPPORT AND ACCESS FOR X-RAY FILM INSERTION
- CLAMPING METHOD
- CHILL OR BACK-UP BAR LOCATION, INDEX, AND RETRACTION
- PART LOAD AND UNLOAD

WELD DEVELOPMENT

Phase I

Side beam with "weld traveler" mounted in flat, horizontal, vertical, and 45 deg positions in order to support preliminary weld development.

WELD DEVELOPMENT: PHASE I

FLAT

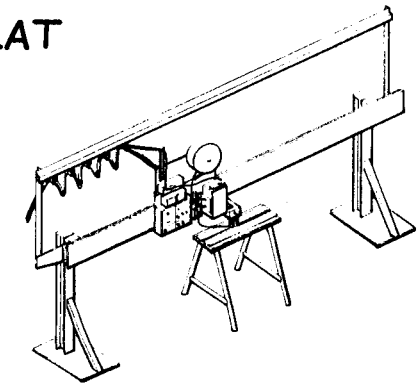

HORIZONTAL

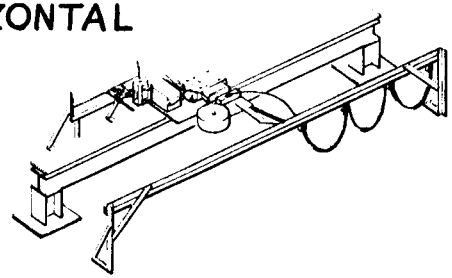

VERTICAL

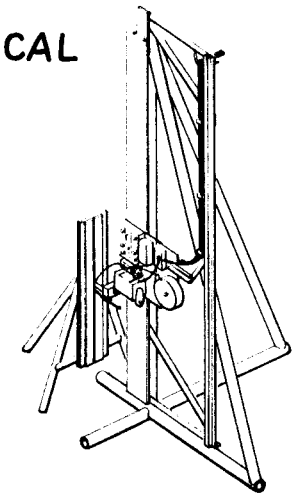

45°

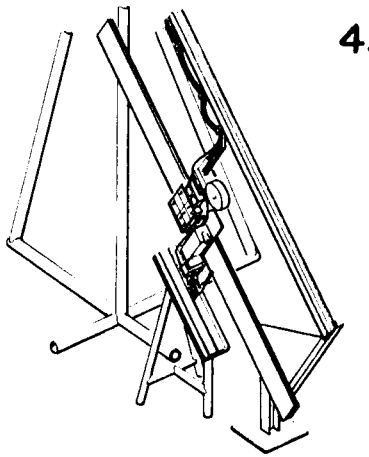

NSP 2873 5-10-63

EXPERIMENTAL TOOLING

GORE PANEL-QUARTER BULKHEAD

EXTERNAL WELD

1 WELD TRAVELER
2 POWER & CONTROL DOLLY
3 MAN LIFT

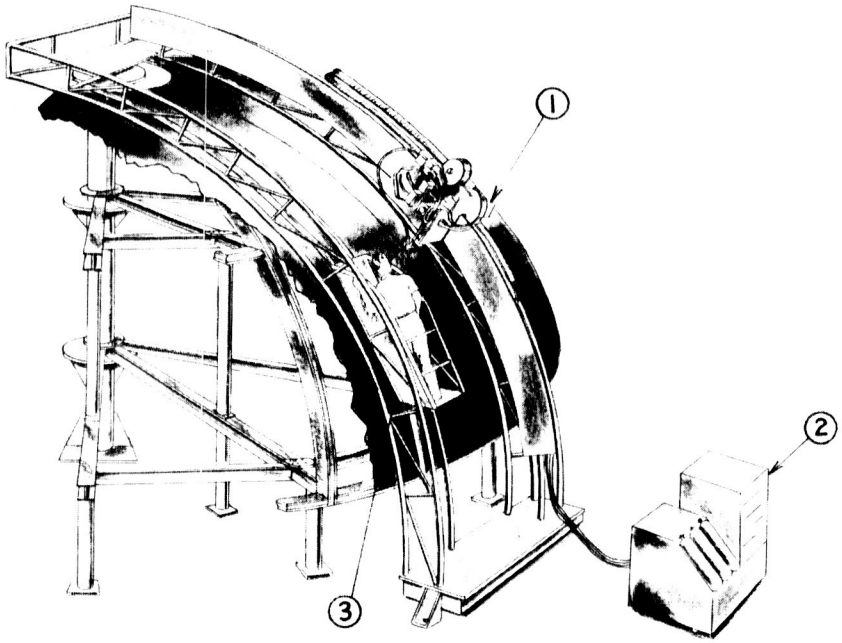

NSP 2865 5-10-63

EXPERIMENTAL TOOL

GIRTH WELD - QUARTER BULKHEAD
EXTERNAL WELD

1. HORIZONTAL GIRTH WELD INSTALLATION
2. 45° GIRTH WELD INSTALLATION
3. BASIC SUPPORT STRUCTURE

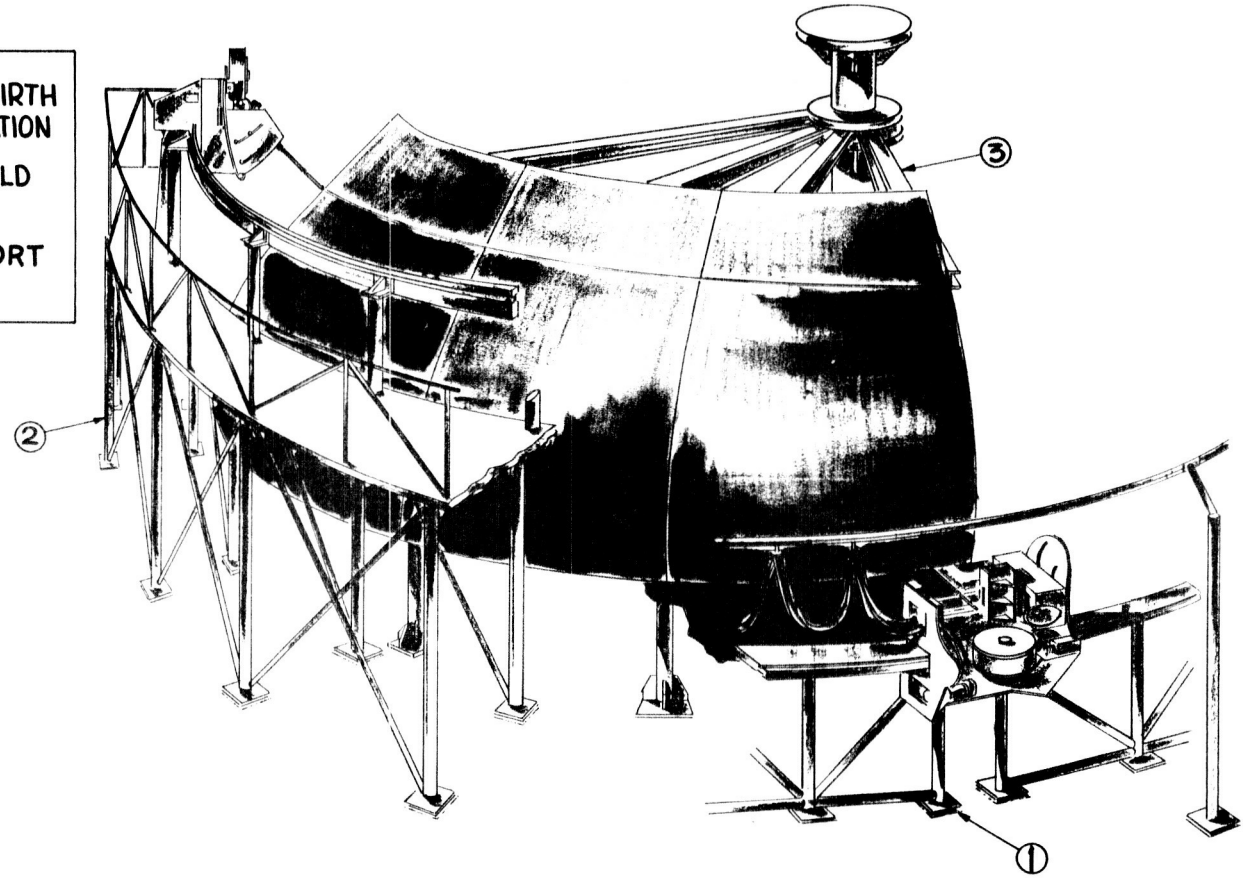

NSP 2864 5-10-63

EXPERIMENTAL TOOL

GORE PANEL: QUARTER BULKHEAD

EXTERNAL WELD FIXTURE COMPONENTS

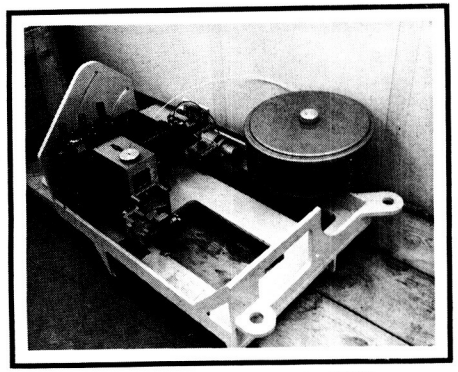

WELD TRAVELER
WITH WIRE FEED SPOOL AND
TORCH CONTROL UNIT

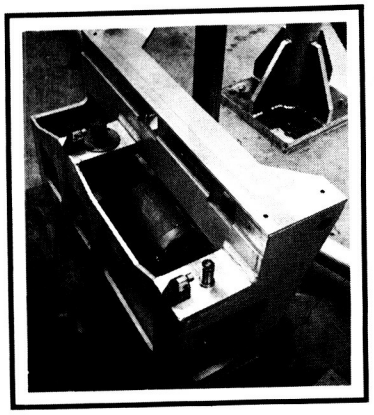

WELD TRAVELER
DRIVE

SCIAKY SIDE BEAM WITH LMSC
RAIL MODIFICATION

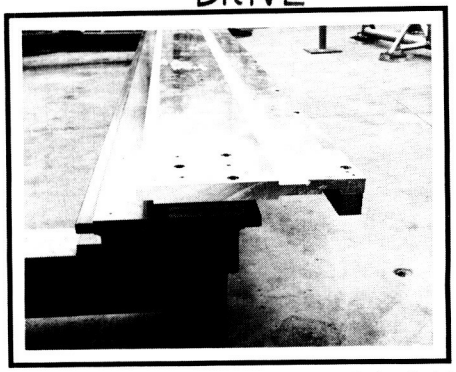

SCIAKY SIDE BEAM WITH LMSC
RAIL MODIFICATION (CLOSE-UP VIEW)

NSP 2879
5-10-63

GORE PANEL -- QUARTER BULKHEAD

EXTERNAL WELD – FIXTURE

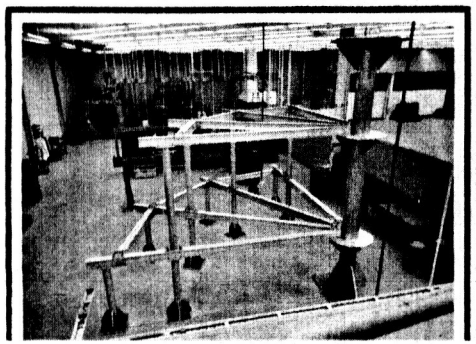

VIEW OF BASIC FRAMEWORK OF THE EXPERIMENTAL WELD FIXTURE STRUCTURE

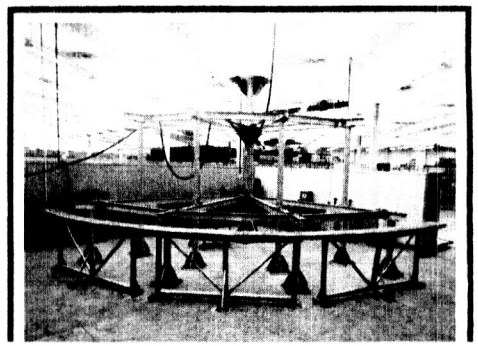

FRONT VIEW OF EXPERIMENTAL WELD FIXTURE, SHOWING WELD TRAVELER RAIL IN FOREGROUND

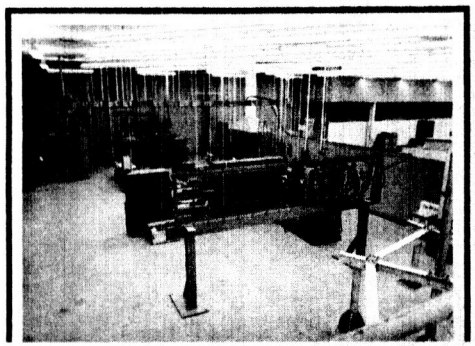

REAR VIEW OF THE WELD TRAVELER, RAIL, CABLE, CABLE SUPPORT, AND CONSOLES

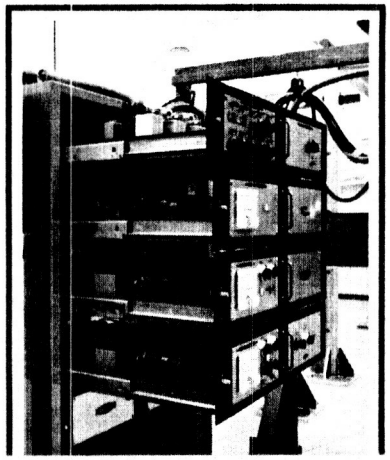

VIEW OF CONTROL CONSOLE, SHOWING THE TRAYS IN AN OPEN POSITION IN ORDER TO ILLUSTRATE SOME OF THE INTERNAL ELECTRONIC GEAR

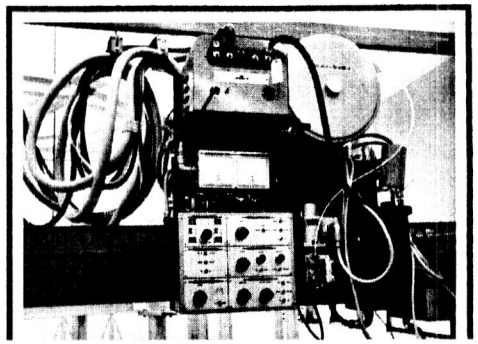

OPERATOR VIEW OF WELD TRAVELER, ILLUSTRATING CONTROL PANEL, HIGH FREQUENCY GENERATOR, WIRE FEED MECHANISM, AND METERS

NSP 2878 5-10-63

EXPERIMENTAL TOOLING

ABBREVIATED GORE PANEL-FITTING INSTALLATION
WELD FIXTURE

1 DRIVE MOTOR
2 PROXIMITY POSITIONER

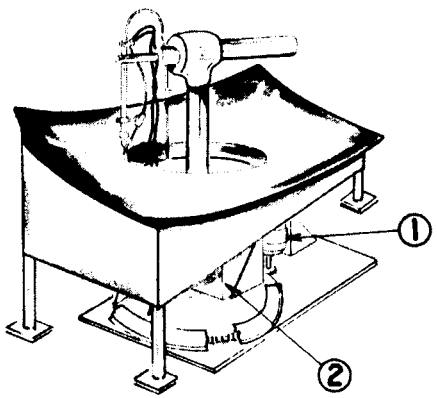

NSP 2884 5-10-63

EXPERIMENTAL TOOL

ABREVIATED BULKHEAD-CLOSURE RING
WELD FIXTURE

1. ROTATING TABLE
2. DIAMETER ADJUST ROD

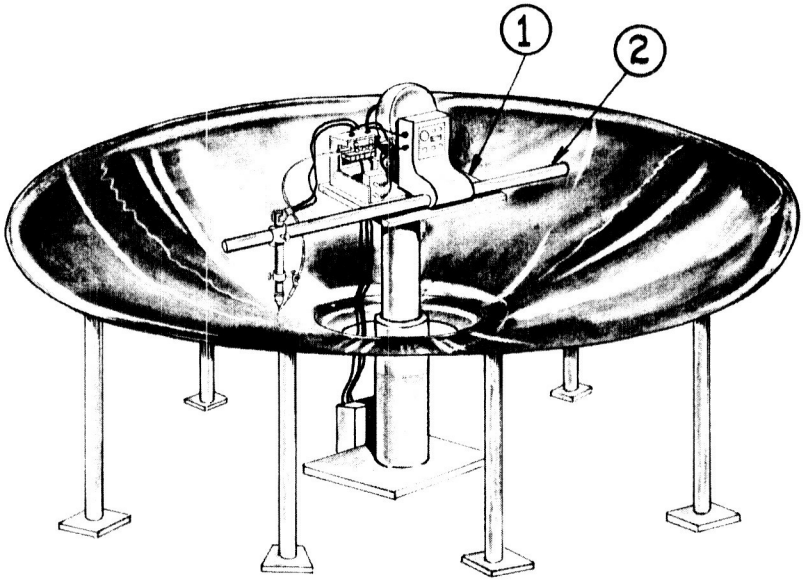

NSP 2874 5-10-63

EXPERIMENTAL TOOL

GORE PANEL: QUARTER BULKHEAD
INTERNAL WELD

1 PIVOTING RAIL
2 WELD TRAVELER

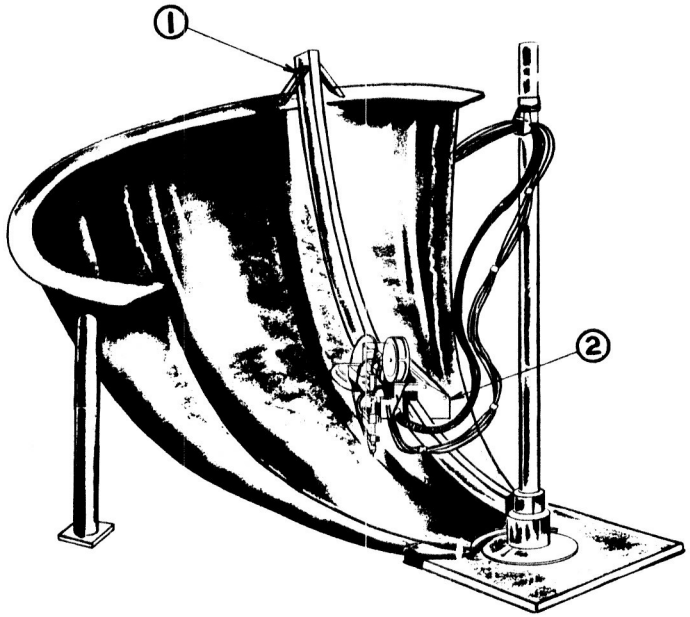

NSP 2877 5-10-63

EXPERIMENTAL TOOL