FACILITY FORM 602

N64-30506
(ACCESSION NUMBER)

140
(PAGES)

CR-58820
(NASA CR OR TMX OR AD NUMBER)

(THRU)

1
(CODE)

09
(CATEGORY)

CTS PRICE

$ 4.00 ph

$ 1.00 mf

AUTONETICS

A DIVISION OF NORTH AMERICAN AVIATION, INC.

63-302

EM 1063-7 COPY 1

FINAL REPORT - ANALYSIS OF LOG COMPRESSION AMPLIFIER

Purchase Order AV4-224494

15 August 1963

JET PROPULSION LABORATORIES

Approved by

E. H. SCHAEFER
Vice President
Quality, Reliability, and Standards

Autonetics A DIVISION OF NORTH AMERICAN AVIATION, INC., ANAHEIM, CALIFORNIA

CONTENTS

Section		Page
I.	INTRODUCTION	I-1
II.	METHOD OF ANALYSIS	II-1
	1. DC Analysis	II-5
	2. AC Analysis	II-10
III.	INPUT PARAMETER DATA	III-1
	1. Introduction	III-1
	2. Sources of Input Parameter Data	III-1
IV.	DC MANDEX WORST-CASE ANALYSIS	IV-1
V.	AC MANDEX	V-1
VI.	DESCRIPTION OF THE OUTPUT OF ENVELOPE	VI-1
VII.	TEMPERATURE ANALYSIS	VII-1
VIII.	SUMMARY AND CONCLUSIONS	VIII-1
	APPENDIX I	A-1

ILLUSTRATIONS

Figure		Page
1.	Schematic of Log Comparison Amplifier	II-3
2.	Schematic Showing the Point at Which the Circuit was Split	II-5
3.	DC Circuit (First Part) Showing Node Numbers Used in DC MANDEX	II-7

ILLUSTRATIONS (CONT)

Figure		Page
4.	DC Circuit (Second Part) Showing Node Numbers used in DC MANDEX	II-9
5.	AC Circuit (First Part) Showing Node Numbers used in AC MANDEX Analysis	II-11
6.	AC Circuit (Second Part) Showing Node Numbers used in AC MANDEX Analysis	II-13
7.	Piecewise Linear Diode Characteristic Showing Source and Break Point Voltages	II-14
8.	Diode State Combinations for First and Second Parts of the Circuit	II-16
9.	Input Current of Second Part of Circuit as a Function of Input Voltage	II-18
10.	VIN vs IL2 for Nominal, Maximum, and Minimum Parameter Settings (at -50 C)	II-20
11.	VIN vs IL2 for Nominal, Maximum, and Minimum Parameter Settings (at -50 C)	II-21
12.	VIN vs IL3 for Nominal, Maximum, and Minimum Parameter Settings (at -50 C)	II-22
13.	VIN vs IL4 for Nominal, Maximum, and Minimum Parameter Settings (at -50 C)	II-23
14.	VIN vs IL1 for Nominal, Maximum, and Minimum Parameter Settings (at +25 C)	II-24
15.	VIN vs IL2 for Nominal, Maximum, and Minimum Parameter Settings (at +25 C)	II-25
16.	VIN vs IL3 for Nominal, Maximum, and Minimum Parameter Settings (at +25 C)	II-26

ILLUSTRATIONS (CONT)

Figure		Page
17.	VIN vs IL4 for Nominal, Maximum, and Minimum Parameter Settings (at +25 C)	II-27
18.	V-1 Characteristics of a Typical Diode	III-2
19.	Equivalent Circuit Suggested by Linear Approximations	III-2
20.	Collector-emitter and Base-emitter V-1 Characteristics of Typical Transistor	III-4
21	DC Equivalent Circuit Representing Collector-emitter and Base-emitter Characteristics of Typical Transistor	III-5
22.	Envelope	VI-2
23.	Fixed Input Parameters	VI-3
24.	Fixed Input Parameters (Cont)	VI-4
25.	Fixed Input Parameters (Cont)	VI-5
26.	Variable Input Parameters	VI-6
27.	Diode Input Parameters	VI-7
28.	Output Solution Data	VI-8
29.	Output Solution Data (Cont)	VI-9
30.	Output Solution Data (Cont)	VI-10
31.	Output Solution Data (Cont)	VI-11
32.	Output Solution Data	VI-14
33.	Output Solution Data	VI-15
34.	Output Solution Data (Cont)	VI-16

ILLUSTRATIONS (CONT)

Figure		Page
35.	Output Solution Data (Cont)	VI-17
36.	Output Solution Data (Cont)	VI-18
37.	Output Solution Data (Cont)	VI-19
38.	Output Solution Data (Cont)	VI-20
39.	ENAC vs ILl for Nominal ILl (at 25 C)	VI-21
40.	ENAC vs ILl for Maximum ILl (at 25 C)	VI-22
41.	ENAC vs ILl for Minimum ILl (at 25 C)	VI-23
42.	Output Solution Data	VI-24
43.	Output Solution Data (Cont)	VI-25
44.	Output Solution Data (Cont)	VI-26
45.	Output Solution Data (Cont)	VI-27
46.	Output Solution Data (Cont)	VI-28
47.	Output Solution Data (Cont)	VI-29
48.	Output Solution Data (Cont)	VI-30
49.	Output Solution Data (Cont)	VI-31
50.	Output Solution Data (Cont)	VI-32
51.	Output Solution Data (Cont)	VI-33
52.	Output Solution Data (Cont)	VI-34
53.	Output Solution Data (Cont)	VI-35
54.	ENAC vs ILl for Nominal ILl (at -50 C)	VI-36

ILLUSTRATIONS (CONT)

Figure		Page
55.	ENAC vs IL1 for Minimum IL1 (at -50 C)	VI-37
56.	ENAC vs IL1 for Maximum IL1 (at -50 C)	VI-38
57.	Matrix Equation and Solutions at 25 C	VII-6
58.	Matrix Equation and Solution at 25 C (Cont)	VII-7
59.	Derivative of IL1 with Respect to Temperature	VII-9
60.	Derivative of IL1 with Respect to Temperature (Cont).	VII-10
61.	Derivative of IL1 with Respect to Temperature (Cont).	VII-11
62.	Derivative of IL1 with Respect to Temperature (Cont).	VII-12
63.	Derivative of IL2 with Respect to Temperature	VII-13
64.	Derivative of IL2 with Respect to Temperature (Cont).	VII-14
65.	Derivative of IL2 with Respect to Temperature (Cont).	VII-15
66.	Derivative of IL2 with Respect to Temperature (Cont).	VII-16
67.	Change in IL1 due to Individual Input Parameters (at -50 C)	VII-18
68.	Change in IL1 due to Individual Input Parameters (at -50 C) (Cont)	VII-19
69.	Change in IL2 due to Individual Input Parameters (at -50 C)	VII-20
70.	Change in IL2 due to Individual Input Parameters (at -50 C) (Cont)	VII-21
71.	Matrix Equations and Solutions (at -50 C)	VII-22
72.	Matrix Equations and Solutions (at -50 C) (Cont) . . .	VII-23

ILLUSTRATIONS (CONT)

Figure		Page
73.	Total Change in Input Variables Between 25 C and -50 C	VII-24
74.	Change in IL1 due to Individual Input Parameters (at 0 C)	VII-27
75.	Change in IL1 due to Individual Input Parameters (at 0 C) (Cont)	VII-28
76.	Change in IL2 due to Individual Input Parameters (at 0 C)	VII-29
77.	Change in IL2 due to Individual Input Parameters (at 0 C) (Cont)	VII-30
78.	Matrix Equation and Solution (at 0 C)	VII-31
79.	Matrix Equation and Solution (at 0 C) (Cont)	VII-32
80.	Total Change in Output Variables Between 25 C and 0 C	VII-33
81.	Change in IL1 due to Individual Input Parameters (at 50 C)	VII-34
82.	Change in IL1 due to Individual Input Parameters (at 50 C) (Cont)	VII-35
83.	Change in IL1 due to Individual Input Parameters (at 50 C)	VII-36
84.	Change in IL1 due to Individual Input Parameters (at 50 C) (Cont)	VII-37
85.	Matrix Equations and Selections (at 50 C)	VII-38
86.	Matrix Equations and Selections (at 50 C) (Cont)	VII-39
87.	Matrix Equations and Selections (at 50 C) (Cont)	VII-40

TABLES

Number		Page
1.	Voltage Points at Emitters of Q252 and Q257	II-1
2.	Diode Status	II-15
3.	Input Parameter Data Used in the Computer Circuit Analysis	III-7
4.	Nominal and Worst-Case Bias Voltage (in volts)	IV-2
5.	Nominal Transistor Bias Voltage V_{BE} and V_{CB} (in volts)	IV-3
6.	I_{L1} and I_{L2} in Milliamps for 0.1 Volt Input	V-1
7.	I_{L3} and I_{L4} in Milliamps for 0.1 Volt Input	V-1
8.	Input Parameters	VII-5
9.	Comparison of Phase 3 and Phase 4 Results $(\frac{dIL}{dT})$ . . .	VII-17
10.	Comparison of Methods of Calculating Changes	VII-26

I. INTRODUCTION

The analysis of the Log Compression Amplifier Circuit was funded by Jet Propulsion Laboratories, Pasadena, California, under contract Number AV4-224494. This report, describing the results of the analysis and methods employed, fulfills the contractual obligation.

The report is organized into eight sections and an appendix. Section II deals with the approach used in analyzing the circuit, and justifies the underlying assumptions of the methods. The variations in output currents from nominal to worst-case conditions are also presented in Section II in the form of composite curves.

Considerable difficulty was encountered in obtaining parts data for this circuit. In some cases assumptions had to be made. The parts data and all assumptions were carefully checked with the component specialists in the Quality, Reliability, and Standards Division of Autonetics. A complete description of the parts data appears in Section III of the report.

Sections IV through VI present the summarized results of the computer circuit analysis methods. Autonetics has been using computers for the analysis of circuits for a number of years with a great deal of success. A very extensive library of circuit analysis computer routines has been developed within the company. These routines are used, primarily, as design aids to the circuit analyst. They enhance the capabilities of the analyst by enabling him to obtain results which would be impossible to duplicate manually. In addition, they ensure a high degree of accuracy and reduce the time required for analysis. A detailed description of one of these computer routines (MANDEX Worst-Case), used in this analysis, is included as Appendix I.

Of primary importance in the analysis of the Log Compression Amplifier was the behavior of the circuit under large temperature fluctuations. The MANDEX computer routine was especially modified to perform the necessary calculations. Section VII describes the methods and results of the detailed temperature analysis. The component parts that are most influential in changing the output variables, under temperature changes, are isolated.

A summary of the conclusions is presented in Section VIII.

II. METHOD OF ANALYSIS

The Log Compression Amplifier (LCA) consists of seven amplifying stages. The schematic of the LCA is shown in Figure 1. This schematic was received from Jet Propulsion Laboratories (JPL).

Two approaches were considered for the analysis of this circuit: (1) the circuit could be analyzed stage-by-stage or (2) the circuit could be analyzed in two parts. The entire circuit could not be analyzed by any existing computer programs because of the large number of parameters involved, i.e., components. The second method was selected so the effects of the dc and ac feedback could be included.

The circuit was split into two parts. The point at which the circuit was split is shown in Figure 2.

This break-point was selected because there is no dc feedback from the second part of the circuit to the first part. If the voltage at the emitter of Q249 and Q254 are equal, there will be no dc current in R591 caused by the second part of the circuit. It was assumed that this dc current was negligible. The assumption was checked by comparing similar voltage points in both the first and second parts of the circuit. In the first part, similar voltage points are at the emitters of Q242 and Q247. In the second part, similar voltage points are at the emitters of Q252 and Q257. These voltages are shown in Table 1 along with the dc voltage at the emitter of Q249.

Table 1. Voltage Points at Emitters of Q252 and Q257

	Worst Case		
	Nominal	Max	Min
VE Q242	4.594	7.381	2.172
VE Q247	4.550	7.386	2.086
VE Q252	4.342	7.244	1.886
VE Q257	4.554	6.608	2.706
VE Q249	4.498	7.368	2.014

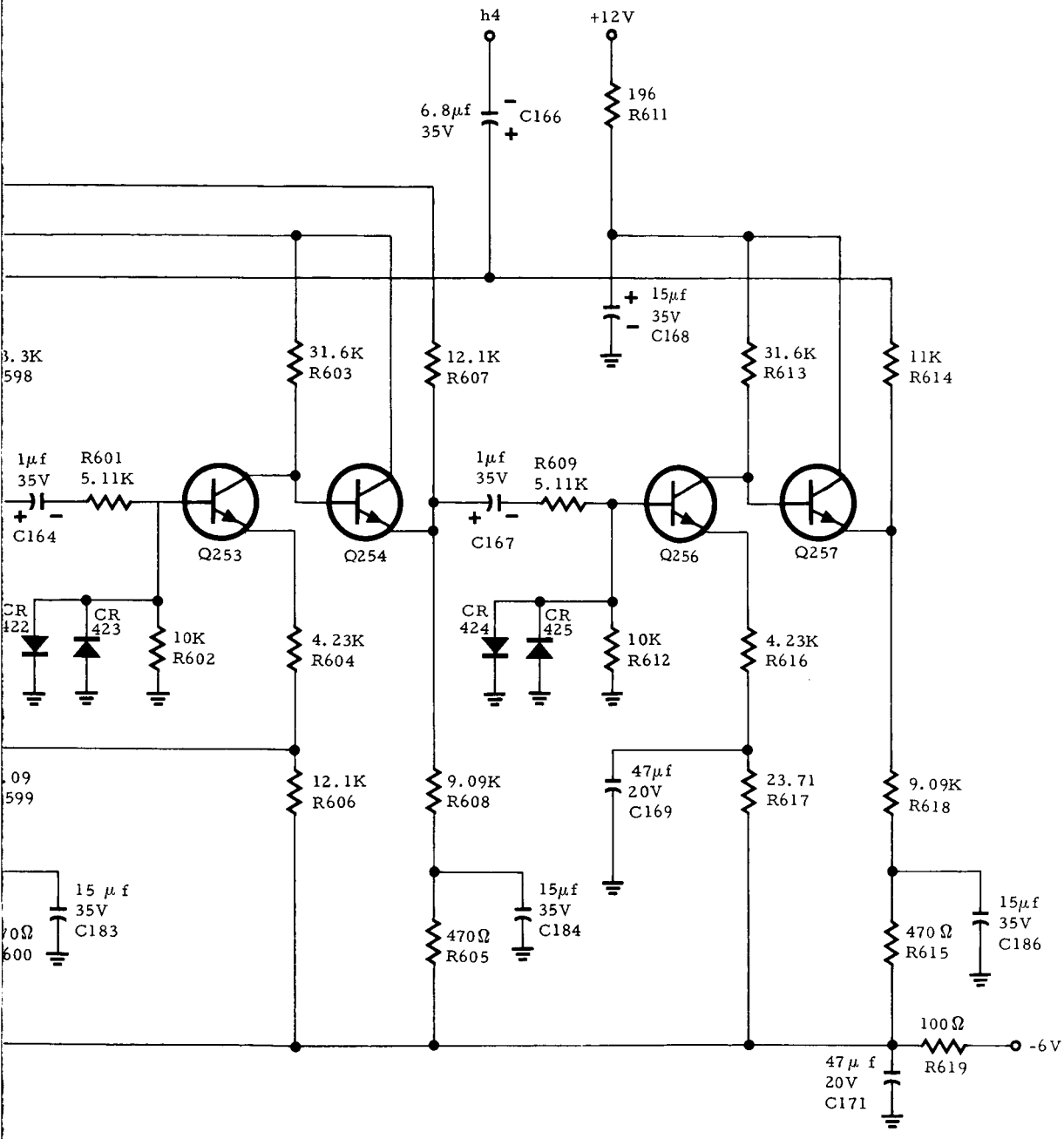

Figure 1. Schematic of Log Comparison Amplifier

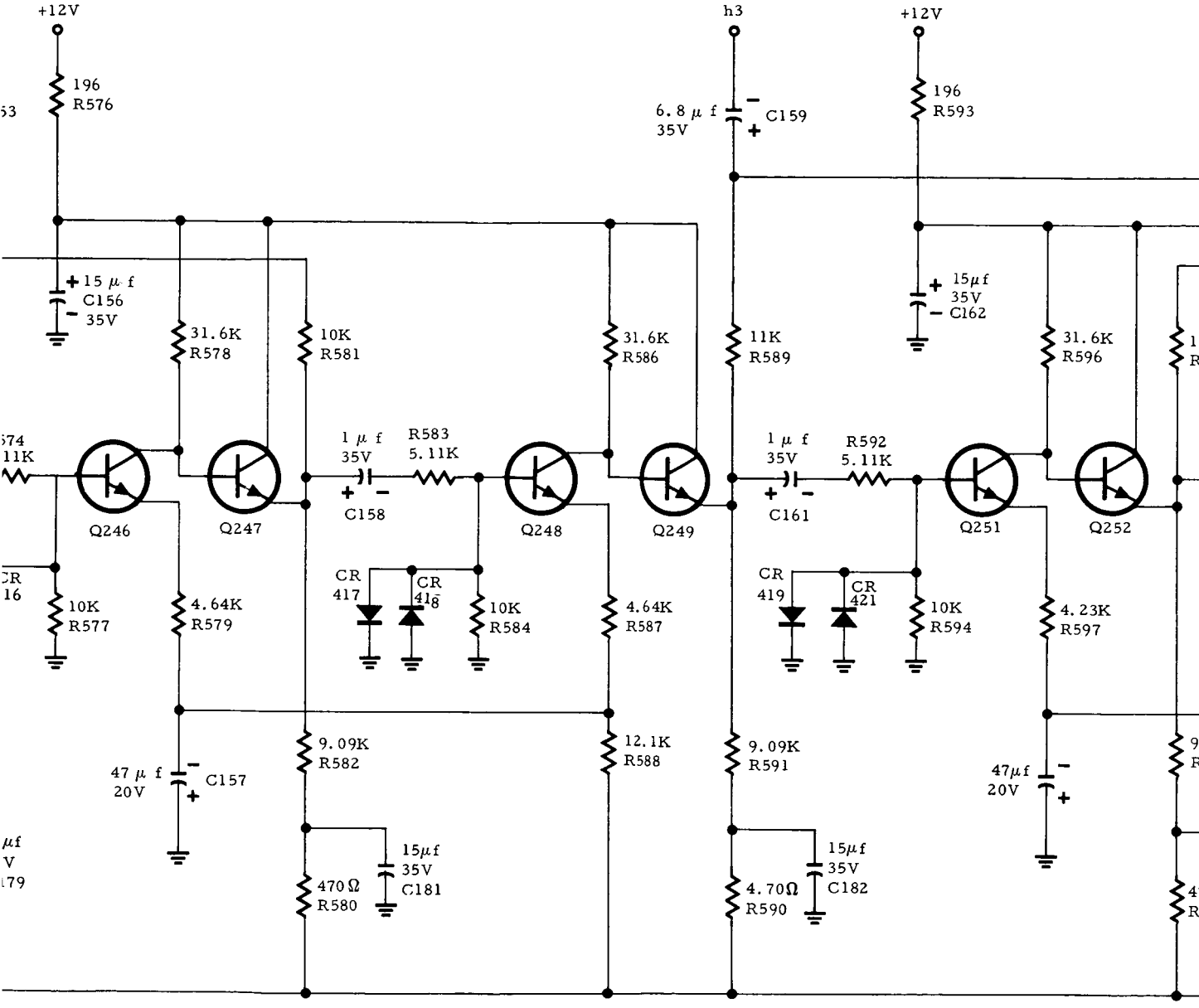
+12V
196
R576
+15 μ f
C156
35V
31.6K
R578
10K
R581
31.6K
R586
h3
6.8 μ f
35V
C159
11K
R589
+12V
196
R593
+15μf
35V
C162
31.6K
R596
1 μ f
35V
R583
5.11K
C158
1 μ f
35V
R592
5.11K
C161
Q246
Q247
Q248
Q249
Q251
Q252
CR
417
CR
418
CR
419
CR
421
10K
R577
4.64K
R579
10K
R584
4.64K
R587
10K
R594
4.23K
R597
47 μ f
20V
C157
9.09K
R582
12.1K
R588
9.09K
R591
47μf
20V
15μf
35V
C181
470Ω
R580
15μf
35V
C182
4.70Ω
R590

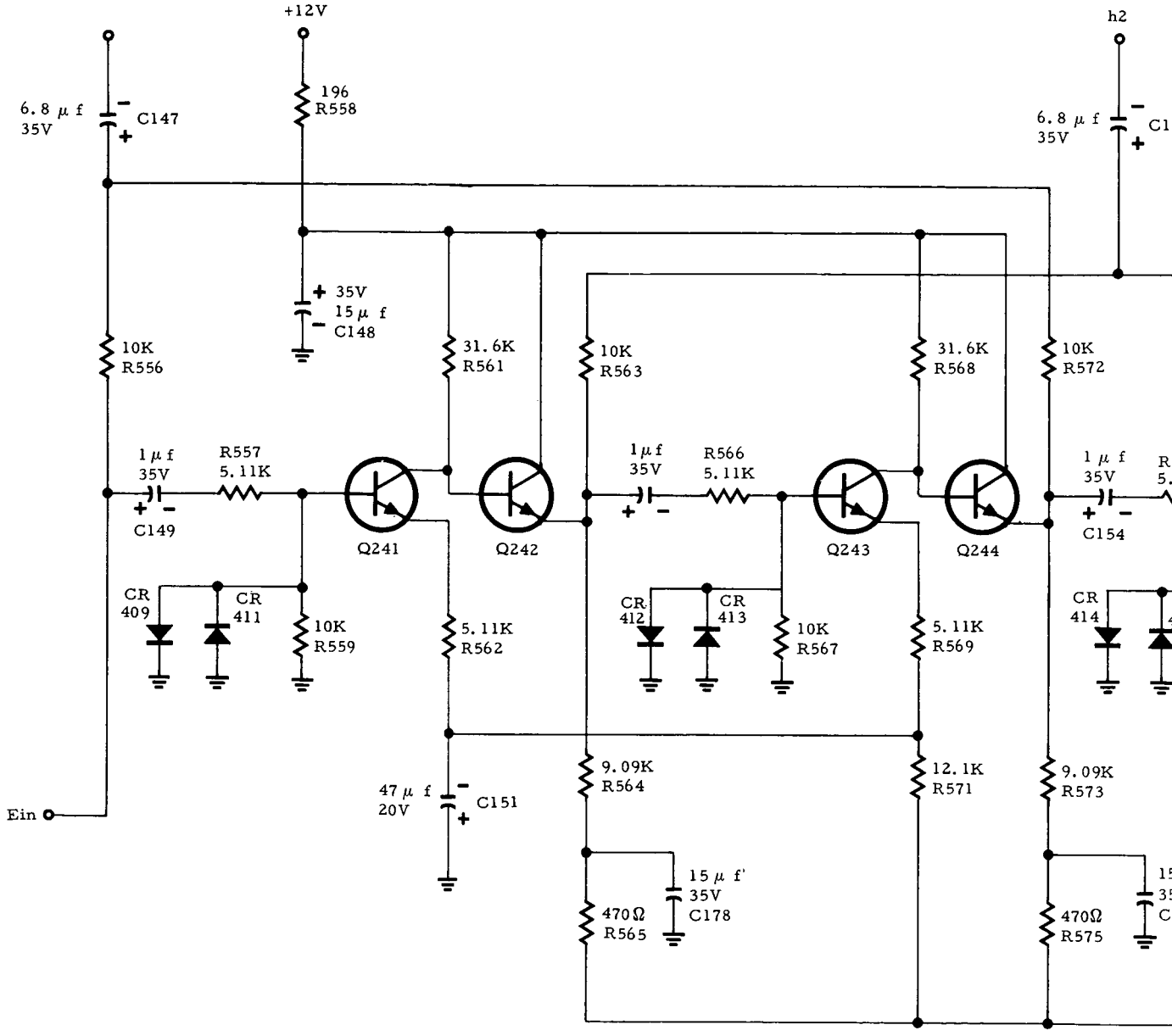
+12V
h2
6.8 μf
35V
C147
196
R558
6.8 μf
35V
C1
35V
15 μ f
C148
10K
R556
31.6K
R561
10K
R563
31.6K
R568
10K
R572
1 μf
35V
R557
5.11K
C149
Q241
Q242
1 μf
35V
R566
5.11K
Q243
Q244
1 μ f
35V
R
5.
C154
CR
409
CR
411
10K
R559
5.11K
R562
CR
412
CR
413
10K
R567
5.11K
R569
CR
414
Ein
47 μ f
20V
C151
9.09K
R564
12.1K
R571
9.09K
R573
15 μ f
35V
C178
470Ω
R565
470Ω
R575

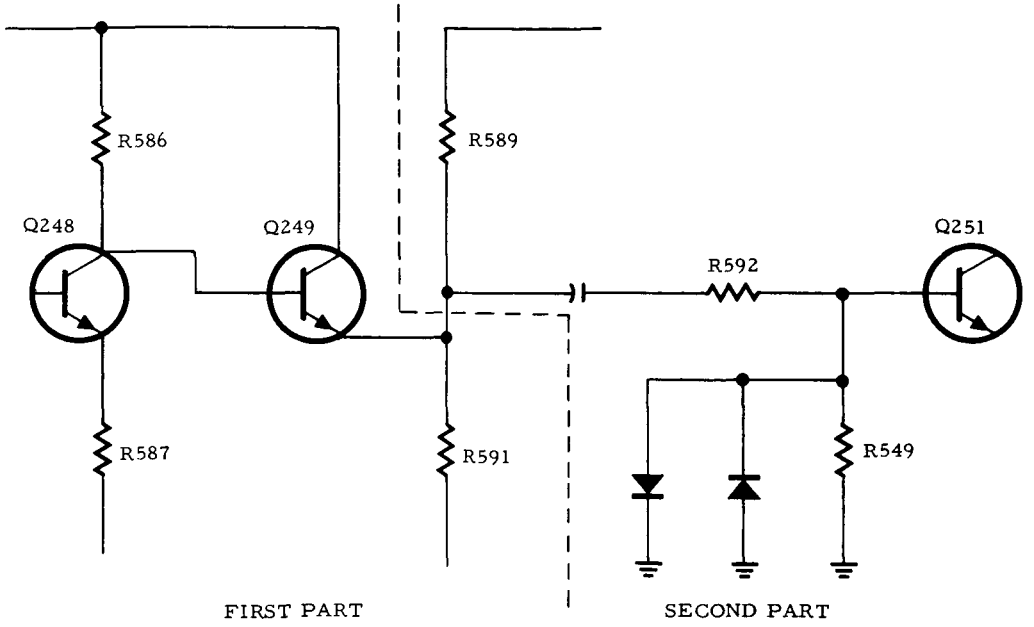

Figure 2. Schematic Showing the Point at Which the Circuit was Split

It can be seen from these voltages that splitting the circuit at this point had little effect on the dc solutions.

An ac feedback path exists from the second part of the circuit to the emitter of Q249 through resistor R589. This ac feedback was taken into account in the ac analysis.

1. DC ANALYSIS

The first and second parts of the circuit were analyzed using a DC MANDEX Worst-case Circuit Analysis. This analysis gives the dc node to ground voltages. The dc circuits, with the appropriate node numbers, are shown in Figures 3 and 4. The results of these analyses are given in the sections titled "DC MANDEX."

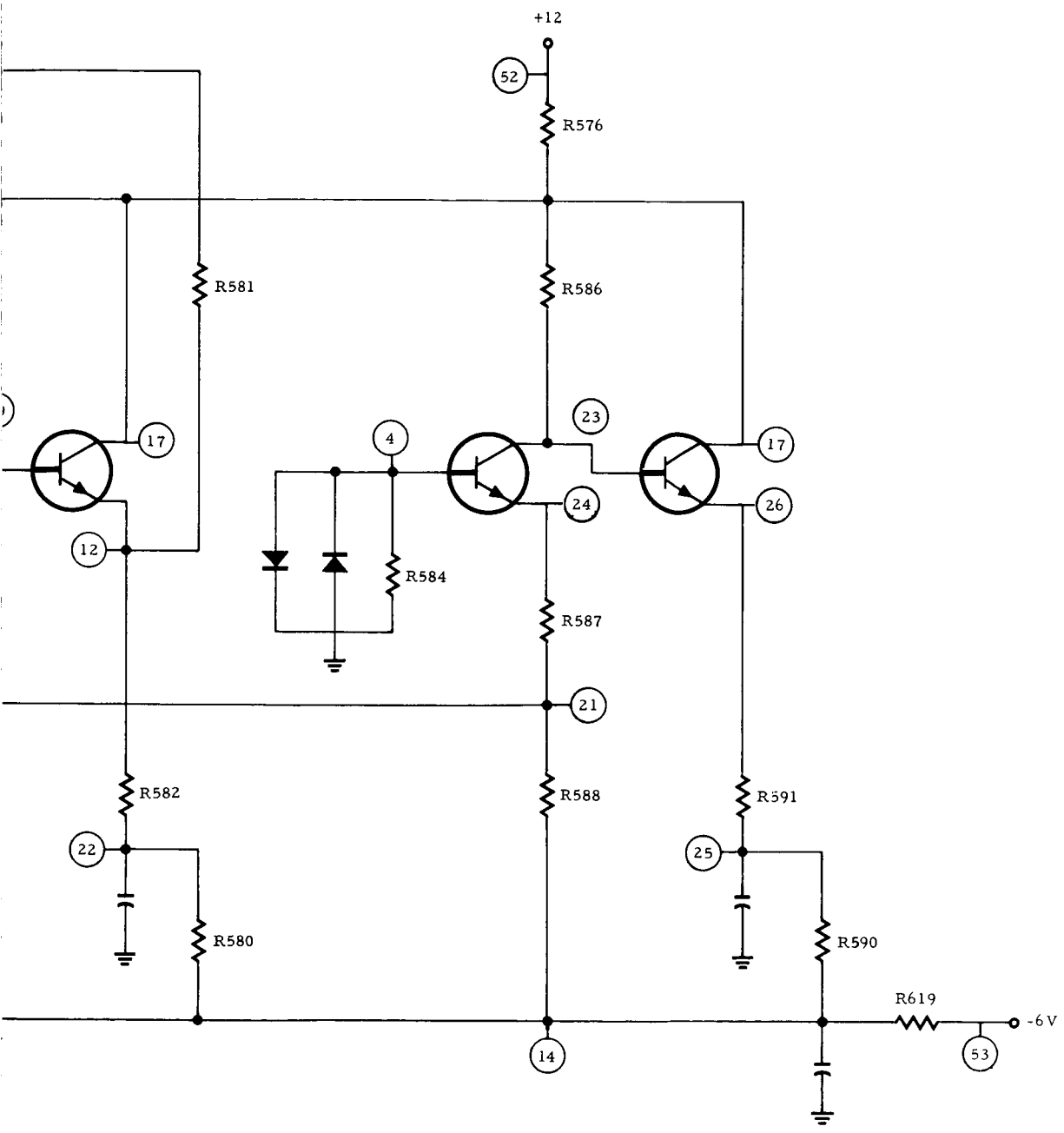

Figure 3. DC Circuit (First Part) Showing Node Numbers Used in DC MANDEX

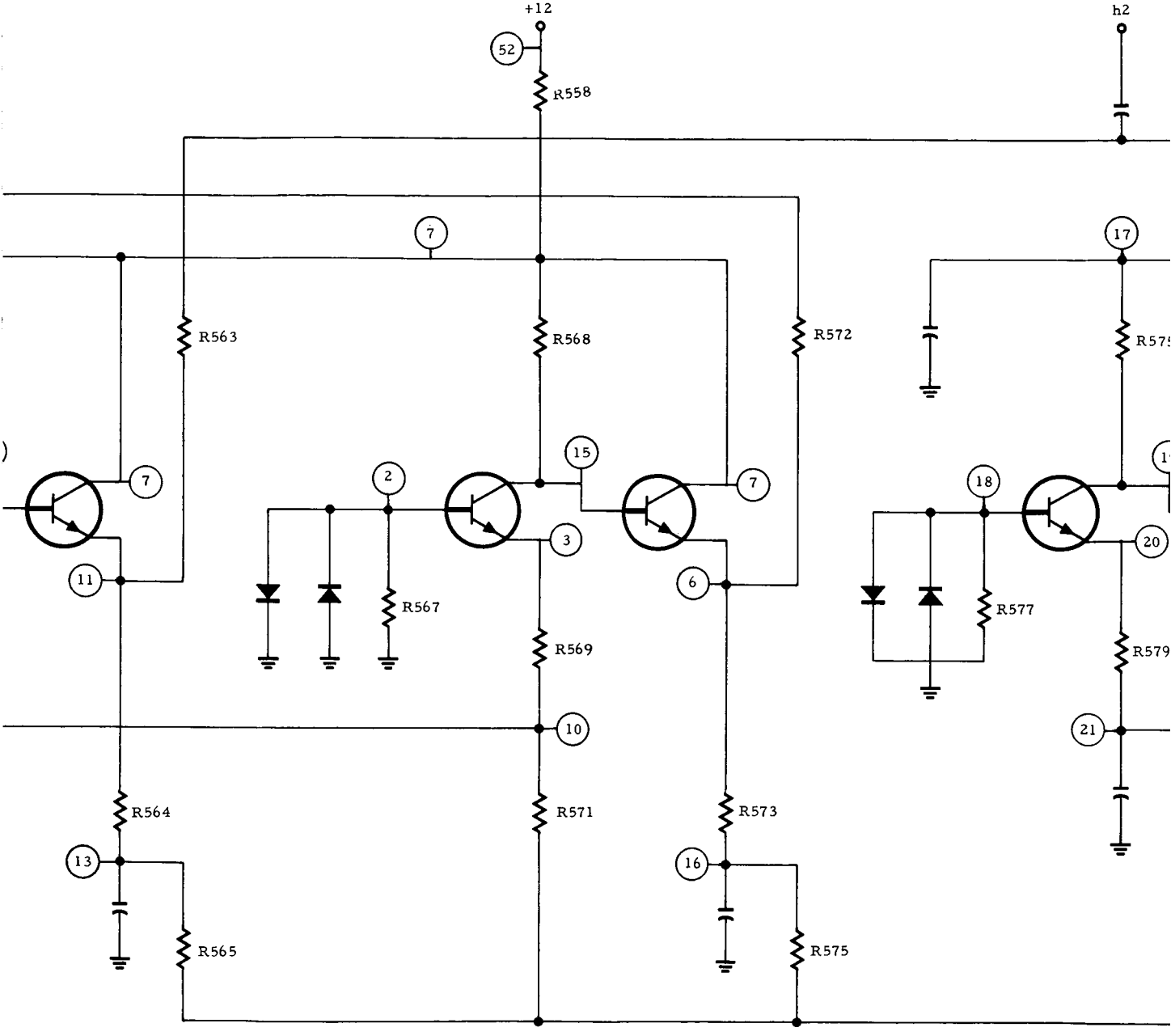

+12
52
R558
h2
7
17
R563
R568
R572
R575
15
2
7
18
7
3
20
11
6
R567
R577
R569
R579
10
21
R564
R571
R573
13
16
R565
R575

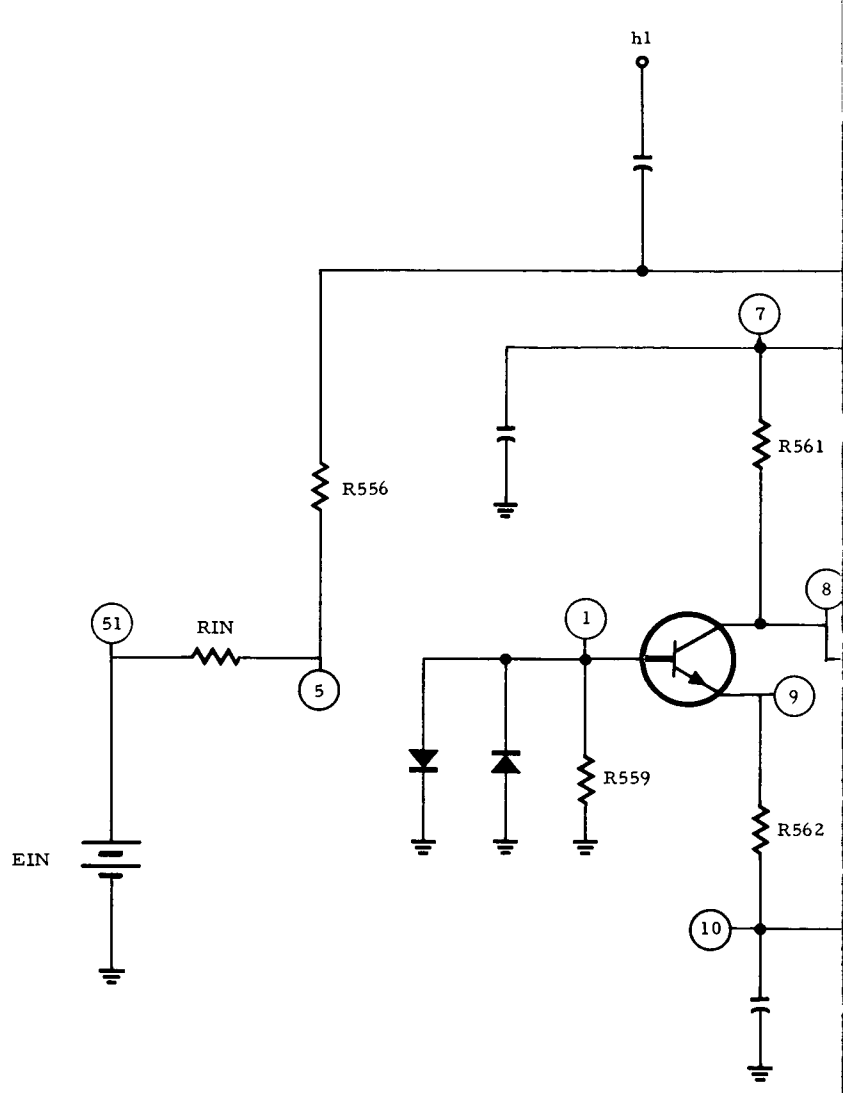
h1
7
R561
R556
8
51
RIN
1
5
9
R559
R562
EIN
10

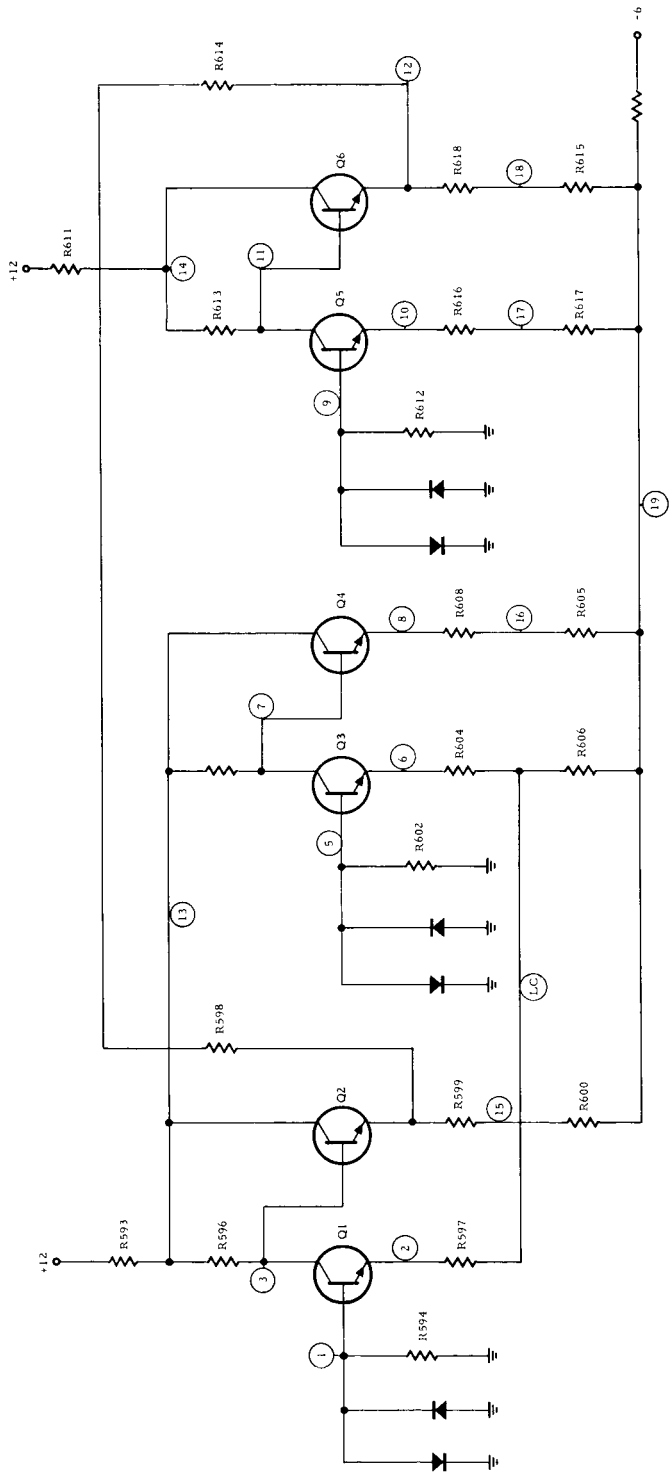

Figure 4. DC Circuit (Second Part) Showing Node Numbers Used in DC MANDEX

The dc input to the first part of the circuit was taken as 1 volt in series with a 200 ohm resistance. This data was obtained by a phone call to JPL. The +12 volts and -6 volts were given a tolerance of ±10 percent. All of the diodes were assumed to be cut off. This assumption was checked by verifying that the voltages at the diode nodes were between ±0.5 volts. All transistors were assumed to be in the active region of operation. This assumption was checked by verifying that the transistor base emitter voltages were more positive than 0.631 volts and that the collector emitter voltages were positive.

Results of the dc analysis indicate that the transistors will remain in the active state under worst-case bias conditions at 25 C. It should be noted that this only applies to the dc bias conditions and does not indicate the state of the transistors when an ac signal is applied.

2. AC ANALYSIS

The ac analysis was conducted by assuming that all capacitors in series with resistors were short circuits and all filter capacitors were shorted to ground. The circuits used for the ac analysis are shown in Figures 5 and 6. The node numbers correspond to the number used in the AC MANDEX Worst-Case circuit Analysis.

The AC MANDEX Worst-case Circuit Analysis of the first part of the circuit was conducted with an ac input voltage of 0.1-volt peak. All of the results of this analysis may be taken as peak voltages and currents. This analysis was also conducted with all transistors in the active state and with all diodes reverse biased.

Results of the AC MANDEX give the partial derivatives of the output currents with respect to each input parameter, i.e., component. The signs of these partial derivatives were used to set the input parameters to a worst-case setting in the Envelope Program. If the sign of a partial derivative of a load current (with respect to a parameter) is positive, the parameter is set to its maximum to obtain a worst-case maximum of the load current. If the sign of the partial is negative, the parameter is set to a minimum. This procedure is reversed if a worst-case minimum of the output current is desired.

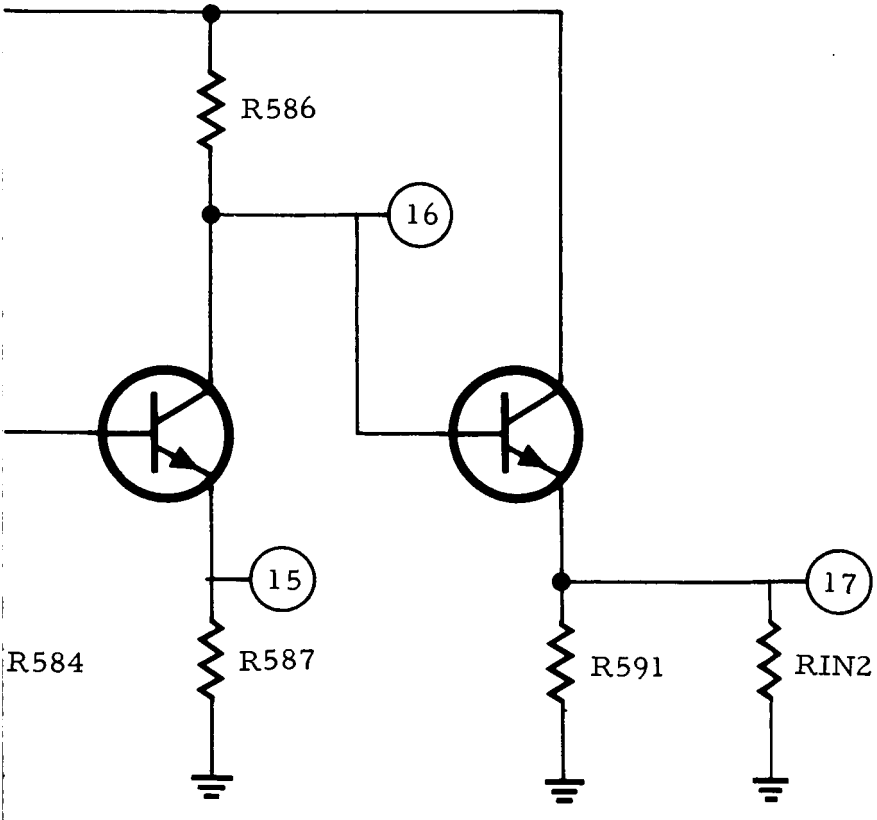

AC Circuit (First Part) Showing Node Numbers
Used in AC MANDEX Analysis

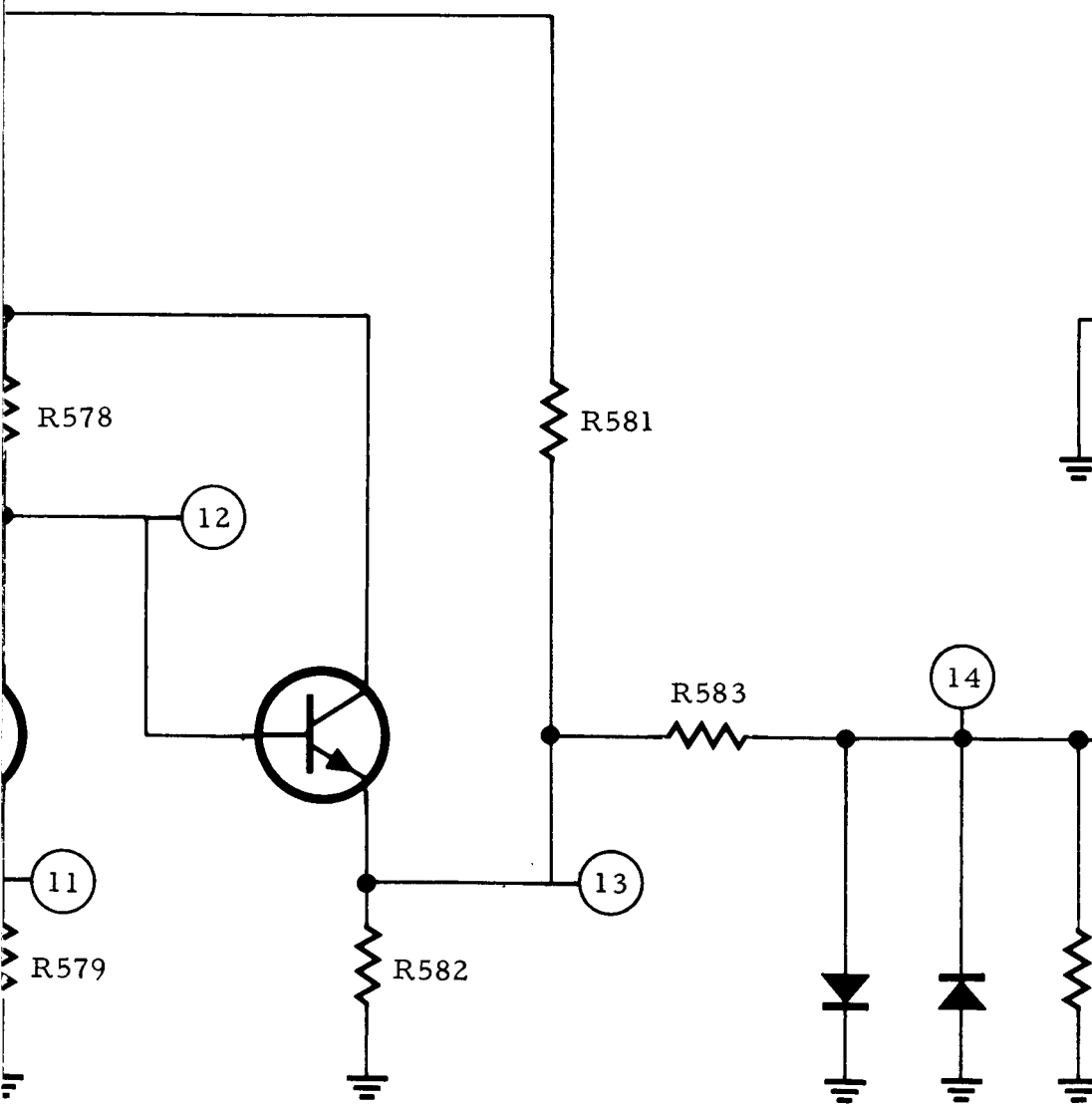

Figure 5.

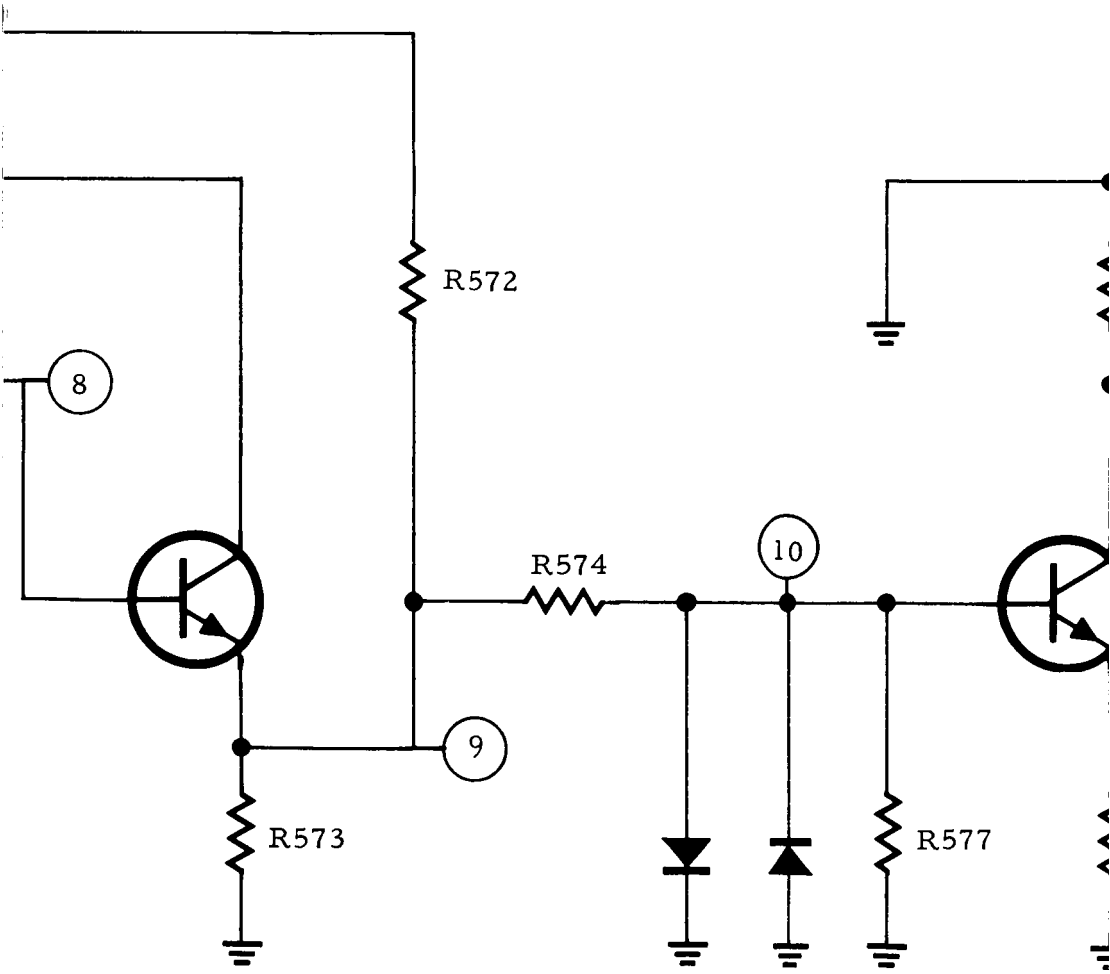
R572
8
R574
10
9
R573
R577

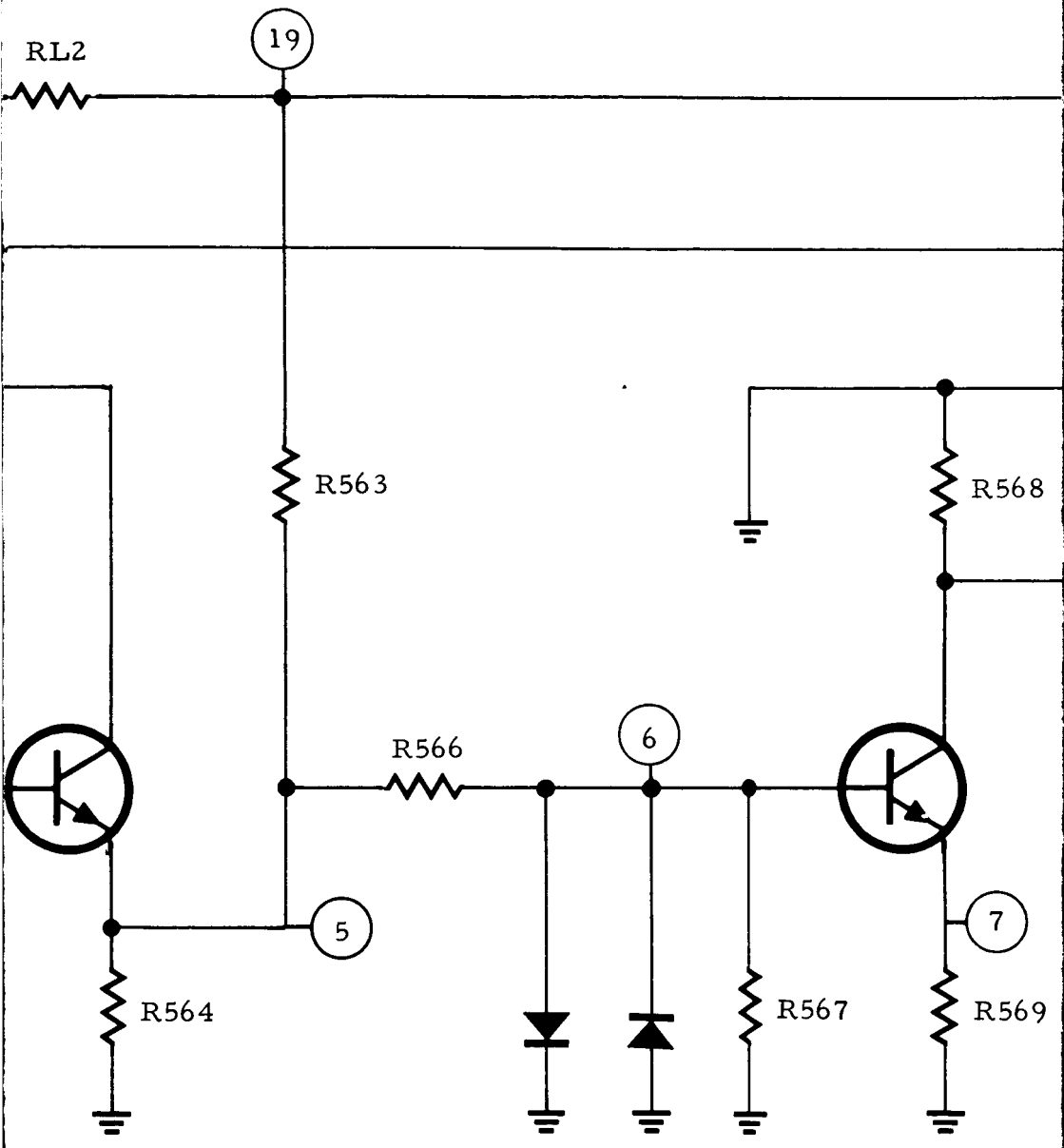
RL2
19
R563
R568
R566
6
5
7
R564
R567
R569

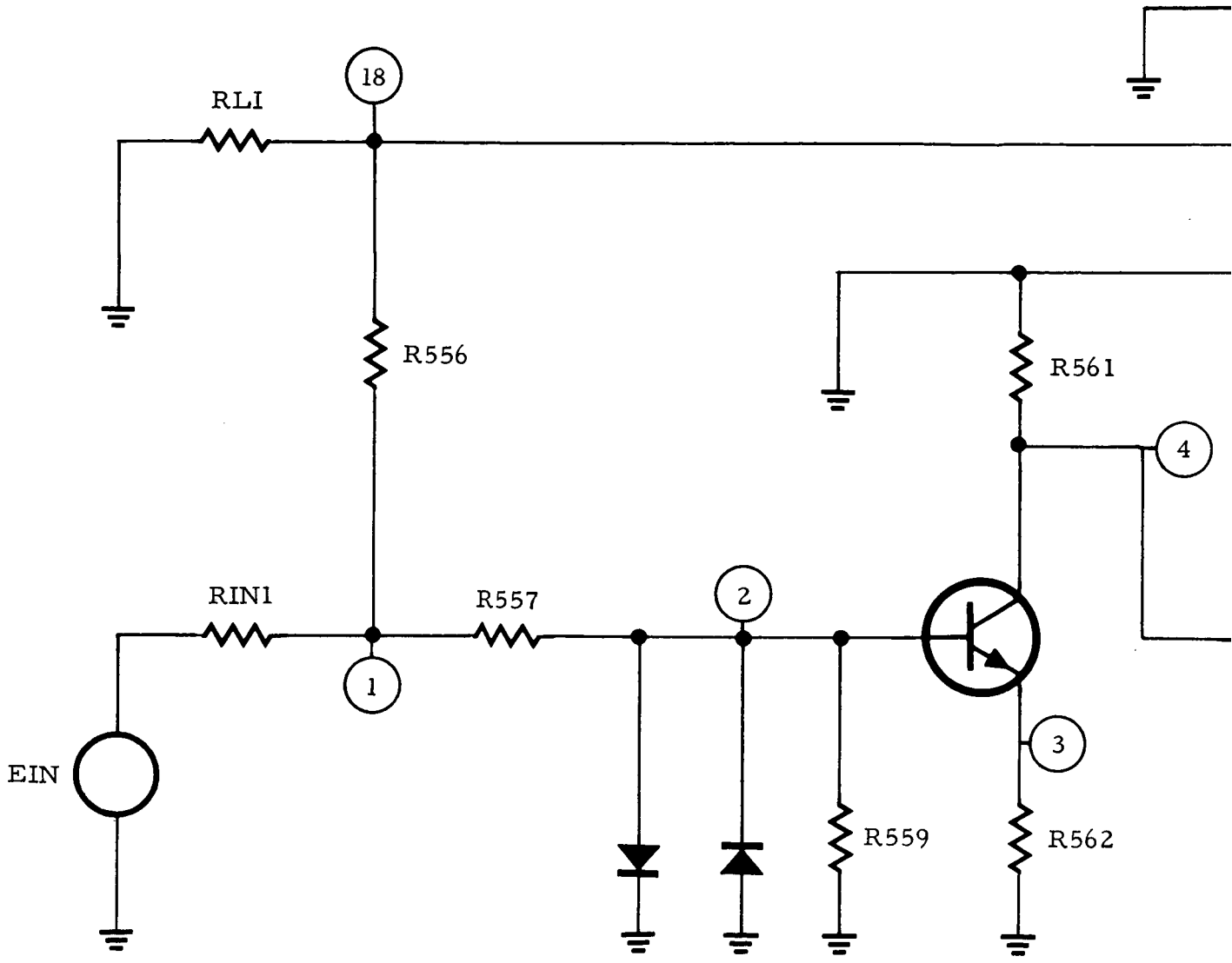
18
RLI
R556
R561
4
RIN1
R557
2
1
3
EIN
R559
R562

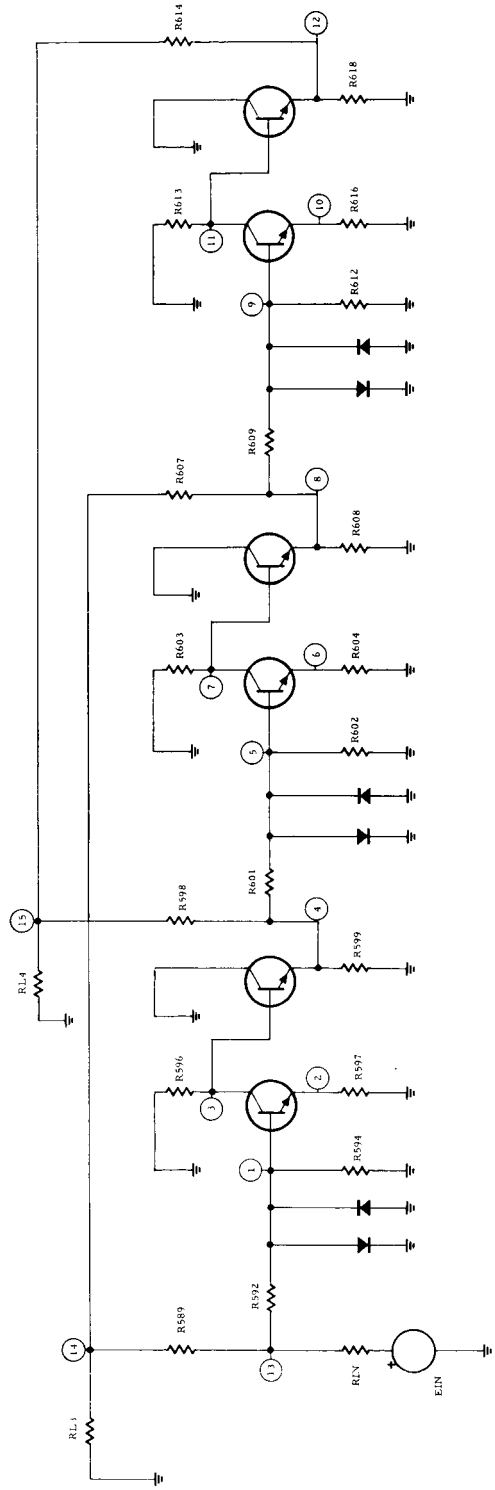

Figure 6. AC Circuit (Second Part) Showing Node Numbers Used in AC MANDEX Analysis

The Envelope Program was used to obtain plots of the output currents as a function of the input voltage at 25 C and -50C. Three plots of each output current were obtained at each temperature. These three plots correspond to the maximum, nominal, and minimum values of the output currents. Composite plots of each load current, with the nominal and extreme values, at each temperature are shown in figures 10 thru 17. The exact values of the parameters in any circuit are unknown. If the parameter extremes used are realistic, it may be stated that the load currents of the circuit will lie between the maximum and minimum curves. The shape of the curve of output current versus input current should closely approximate the curves obtained from experimental checks on the actual circuit. A description of the Envelope Program, which is the analysis technique used to obtain these curves, follows.

The Envelope Program requires the ac and dc circuit equations, ac and dc parameter values, and the values used to represent the diodes. The dc equations are solved to find the diode offset voltages. The ac equations were solved to find the peak values of the output currents.

The operation of the log compression amplifier depends upon the non-linear characteristics of the diodes. Diodes in the Envelope Program were represented by three linear segments. The three linear segments were referred to as cutoff, active, and saturated. Figure 7 shows the type of diode characteristics used in the analysis.

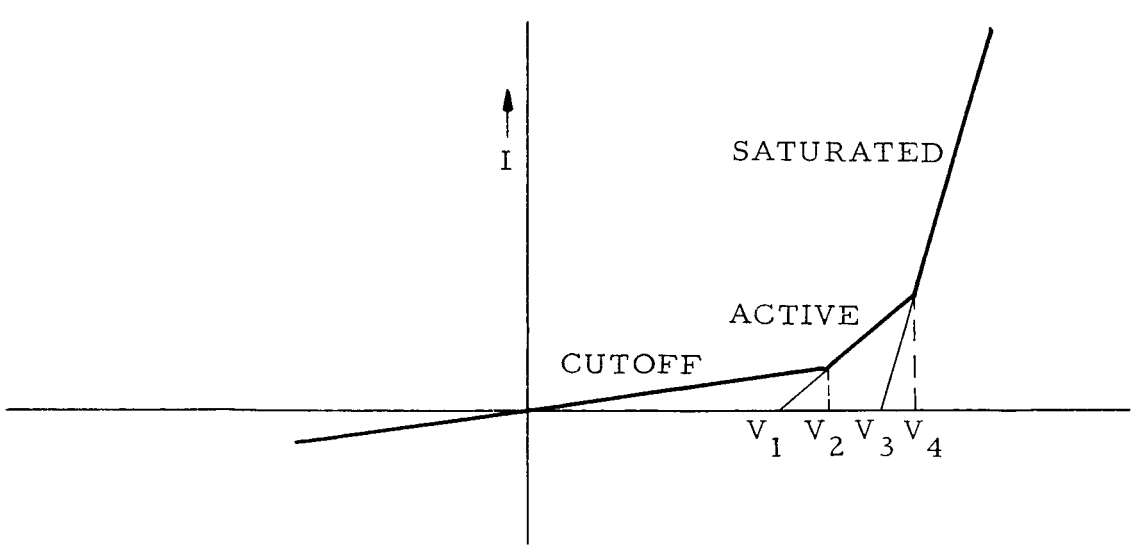

Figure 7. Piecewise Linear Diode Characteristic Showing Source and Break Point Voltages

The cutoff, active, and saturated names were used because the program was originally designed to solve circuits with transistors in the three possible states. The program was modified to analyze the log compression amplifier.

To start the Envelope Analysis, the states of all diodes were assumed. The total voltage (ac plus dc) across each diode was calculated. The states of the diodes can be determined from the following table:

Table 2. Diode Status

Diode Voltage	State
VD	
$VD < V2$	1 or cutoff
$V2 \leq VD < V4$	2 or active
$VD \geq V4$	3 or saturated

The assumed states were then compared with the calculated states. If the states agreed, the solution was valid; if the states did not agree, then a new combination of states was tried. A list of possible combinations of states were given to the program. These states are shown in Figure 8. If the solution did not exist in the given combinations, then the input voltage was stepped to a new value. In some of the computer outputs, points of zero current will be found. These points correspond to points at which no solution could be found.

In the ac analysis of the circuit, it was assumed that saturated diodes consisted of a small resistance in series with an ac voltage source. The ac voltage source was given a value of V3 (see Figure 6), plus or minus the dc voltage across the diode. This dc voltage is the diode offset. The diodes which point to ground had the dc voltage added while those which pointed away from ground had the dc voltage subtracted. A similar procedure was followed for diodes in the active region with the voltage V1 being used in place of V3.

	0	1	2	3	4	5	6	7	8	9	10	11	12	13	14	15	16	17	18	19	20	21	22
D1	1	1	1	1	1	1	1	1	1	1	1	1	1	1	1	1	1	1	1	2	1	2	3
D2	3	2	1	2	1	1	1	1	1	1	1	1	1	1	1	1	1	1	1	1	1	1	1
D3	3	3	3	2	2	2	1	1	1	1	1	1	1	1	1	1	1	1	1	1	1	1	1
D4	1	1	1	1	1	1	1	1	1	1	1	1	1	1	1	1	1	2	2	2	3	3	3
D5	1	1	1	1	1	1	1	1	1	1	1	1	1	2	1	2	3	2	3	3	3	3	3
D6	3	3	3	3	3	2	3	2	1	2	1	1	1	1	1	1	1	1	1	1	1	1	1
D7	3	3	3	3	3	3	3	3	3	2	2	1	1	1	1	1	1	1	1	1	1	1	1
D8	1	1	1	1	1	1	1	1	1	1	1	1	2	2	3	3	3	3	3	3	3	3	3

(a) Diode States First Part of Circuit

	1	2	3	4	5	6	7	8	9	10	11	12	13	14	15	16	17
D1	1	1	1	1	1	1	1	1	1	1	1	1	1	2	1	2	3
D2	3	2	1	2	1	1	1	1	1	1	1	1	1	1	1	1	1
D3	3	3	3	2	2	2	1	1	1	1	1	1	1	1	1	1	1
D4	1	1	1	1	1	1	1	1	1	1	1	2	2	2	3	3	3
D5	1	1	1	1	1	1	1	1	1	2	3	2	3	3	3	3	3
D6	3	3	3	3	3	2	3	2	1	1	1	1	1	1	1	1	1

(b) Diode States Second Part of Circuit

Figure 8. Diode State Combinations for First and Second Parts of the Circuit

Each stage, following a stage with a saturated diode, will also have one of its diodes saturated. An investigation of the cause of the computer routine not being able to find a combination of states revealed that if a first stage diode saturated, then one of the diodes in the last stages would try to go from the saturated to the active region. This is caused by the amplification of the relative small ac signal appearing across the small saturated diode resistances.

The first part of the circuit was analyzed with a resistance of 6K in parallel with R591. This resistance corresponds to the nominal ac input resistance of the second part of the circuit and was calculated by an Envelope Analysis of the second stage with all parameters set to their nominal values. A plot of the slope of this ac input resistance is shown in Figure 9. The input resistance of the second stage was arbitrarily given a ±10 percent tolerance.

The second part of the circuit was analyzed by assuming that the input voltage was applied through a 1.03K resistance. This resistance is the hand calculated value of the output resistance of the first part of the circuit. Maximum and minimum values of the output resistance were determined by calculating the worst case values using the parameter extremes. The maximum and minimum values were determined to be 2.01K and 0.364K. The output resistance was calculated from the following equation:

$$R_{out} = \frac{R591\ (R586 + h_{ie8})}{R586 + h_{ie8} + R591\ (1 + h_{fe8})}$$

Curves for the maximum values of load current were obtained by setting the circuit parameter values to their appropriate high and low limits and then running the Envelope Analysis as before. The proper parameter settings were obtained from the results of the AC MANDEX Circuit Analysis. For example, on calculating the maximum curve of IL_1 the parameter settings that caused a worst case maximum in the AC MANDEX analysis were used. Similar procedures were used to obtain the curves for all other maximum and minimum load current curves. The load resistances used in these calculations were taken as 100 ohms ±20 percent. The components which appear in only the dc circuit were assumed to remain at their nominal values for all load current curves at 25 C.

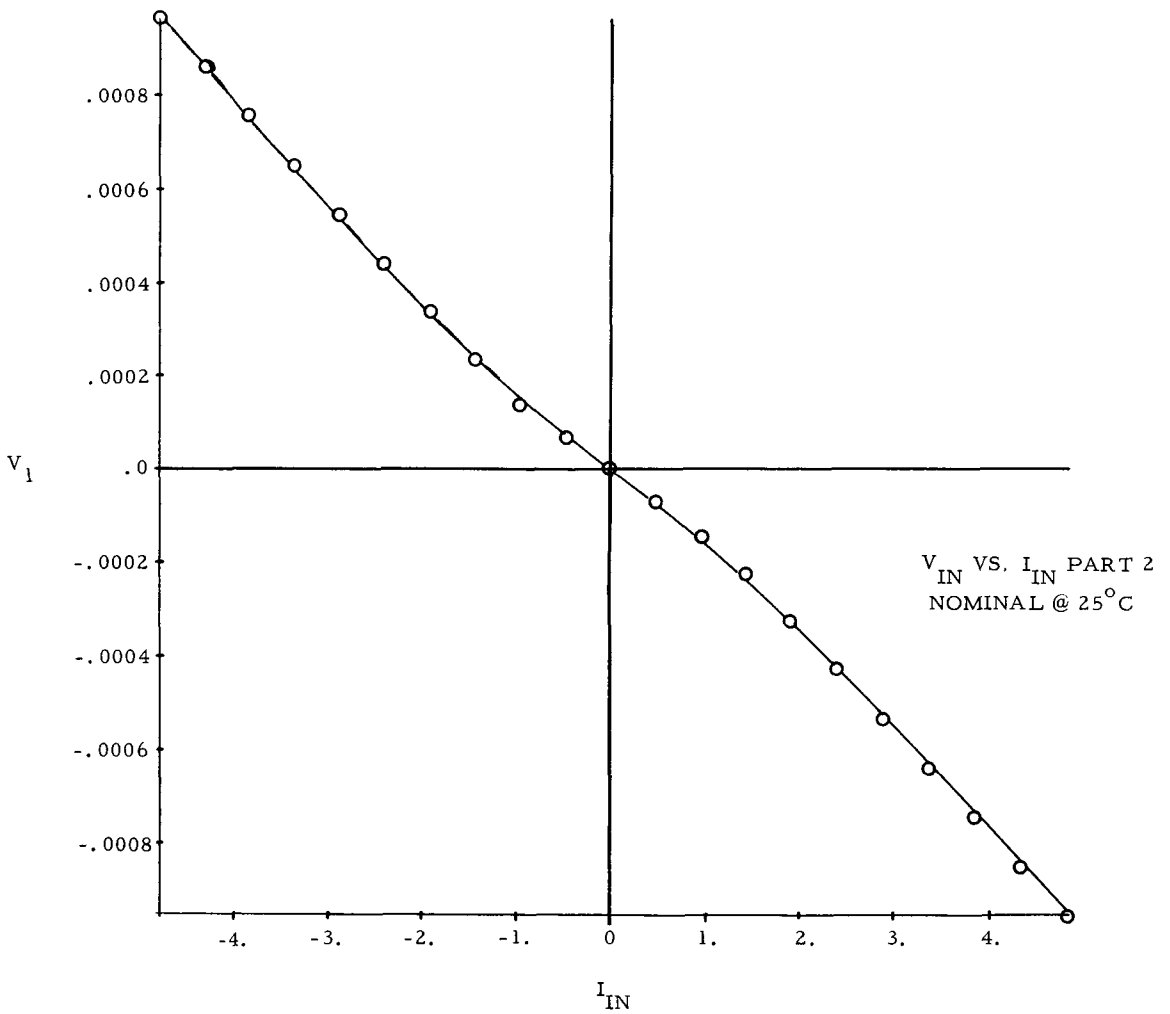

Figure 9. Input Current of Second Part of Circuit as a Function of Input Voltage

The curves at -50 C were obtained by multiplying all parameter values by their temperature coefficients and the temperature change. The temperature coefficients of the voltage sources, i.e., +12 and -6 volts, were assumed to be zero since no other information was available. The procedure used to obtain the maximum and minimum curves at the new temperature was to multiply the values used for maximum and minimum curves by the product of the parameter temperature coefficients and the change in temperature. The temperature coefficients for the transistor parameters were obtained by assuming a straight line approximation between the values at 25 C and minus 50 C.

The results at -50 C include the effects of bias stabilization due to emitter resistances and dc feedback since the dc solutions were included in the calculations. The effects of the temperature change on the transistor biases can be seen by inspecting V_{CB} and V_{BE} on the print out of the Envelope results of the first part of the circuit. It should be noted that the V_{BE} voltage is the ac value only because the value of the transistor barrier potential has been subtracted from the total value. The V_{BE} and V_{CB} values are the total peak voltages.

The sum of the output currents for the first and second parts of the circuit can be obtained for any input voltage by using the output voltage of the first part as the input voltage to the second part of the circuit.

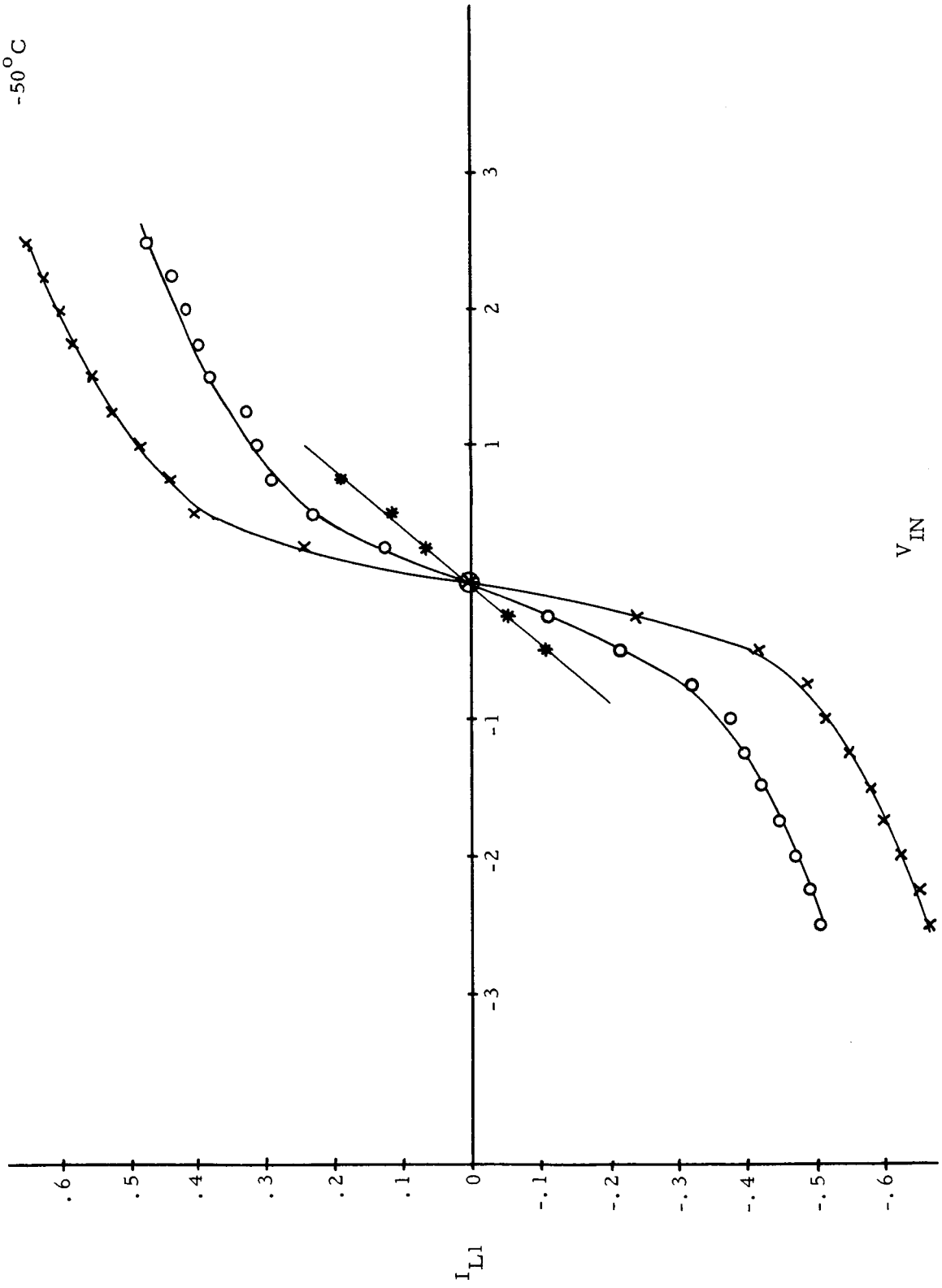

Figure 10. VIN vs IL1 for Nominal, Maximum, and Minimum Parameter Settings (at -50 C)

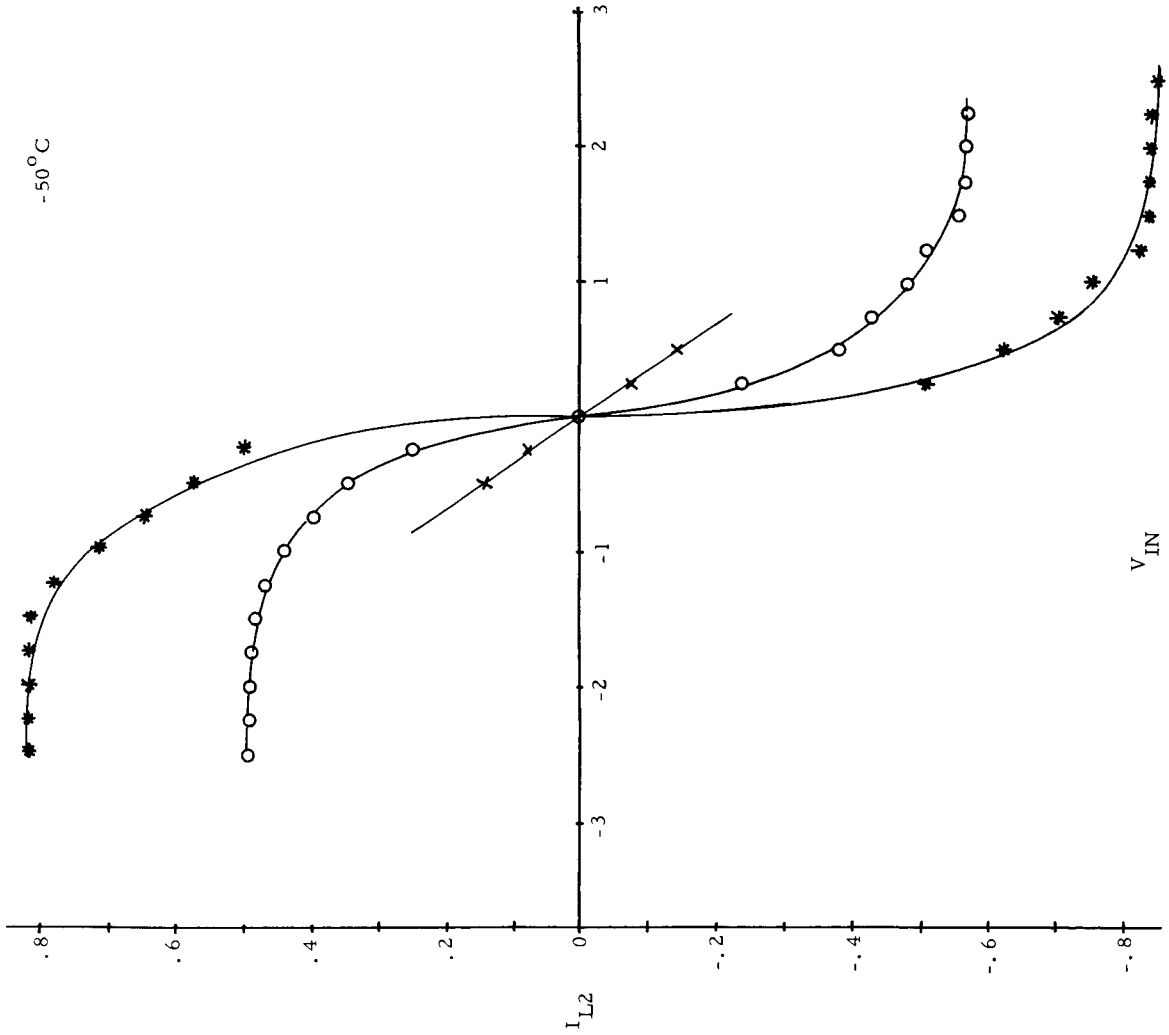

Figure 11. VIN vs IL2 for Nominal, Maximum and Minimum Parameter Settings (at -50 C)

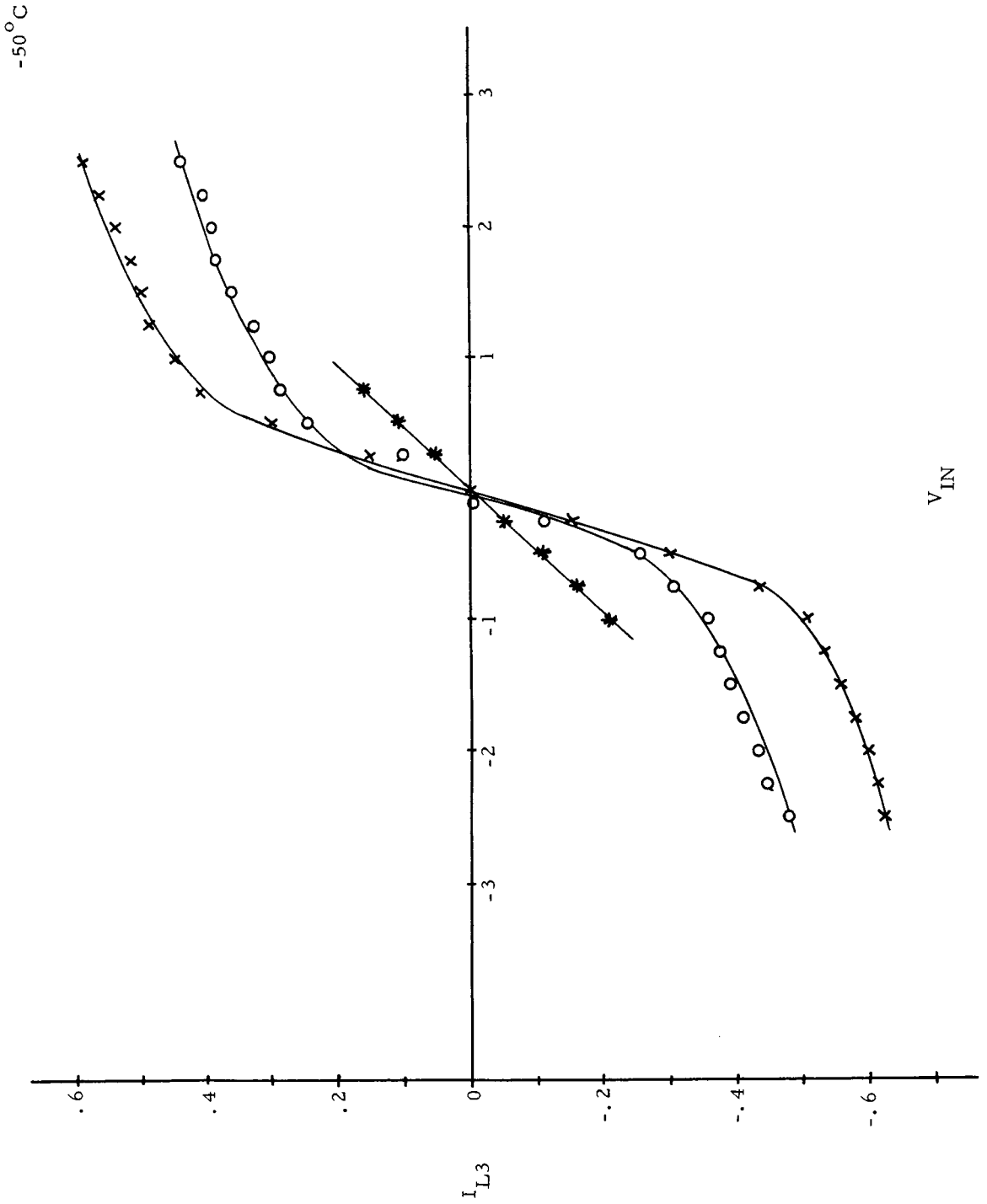

Figure 12. VIN vs IL3 for Nominal, Maximum and Minimum Parameter Settings (at -50 C)

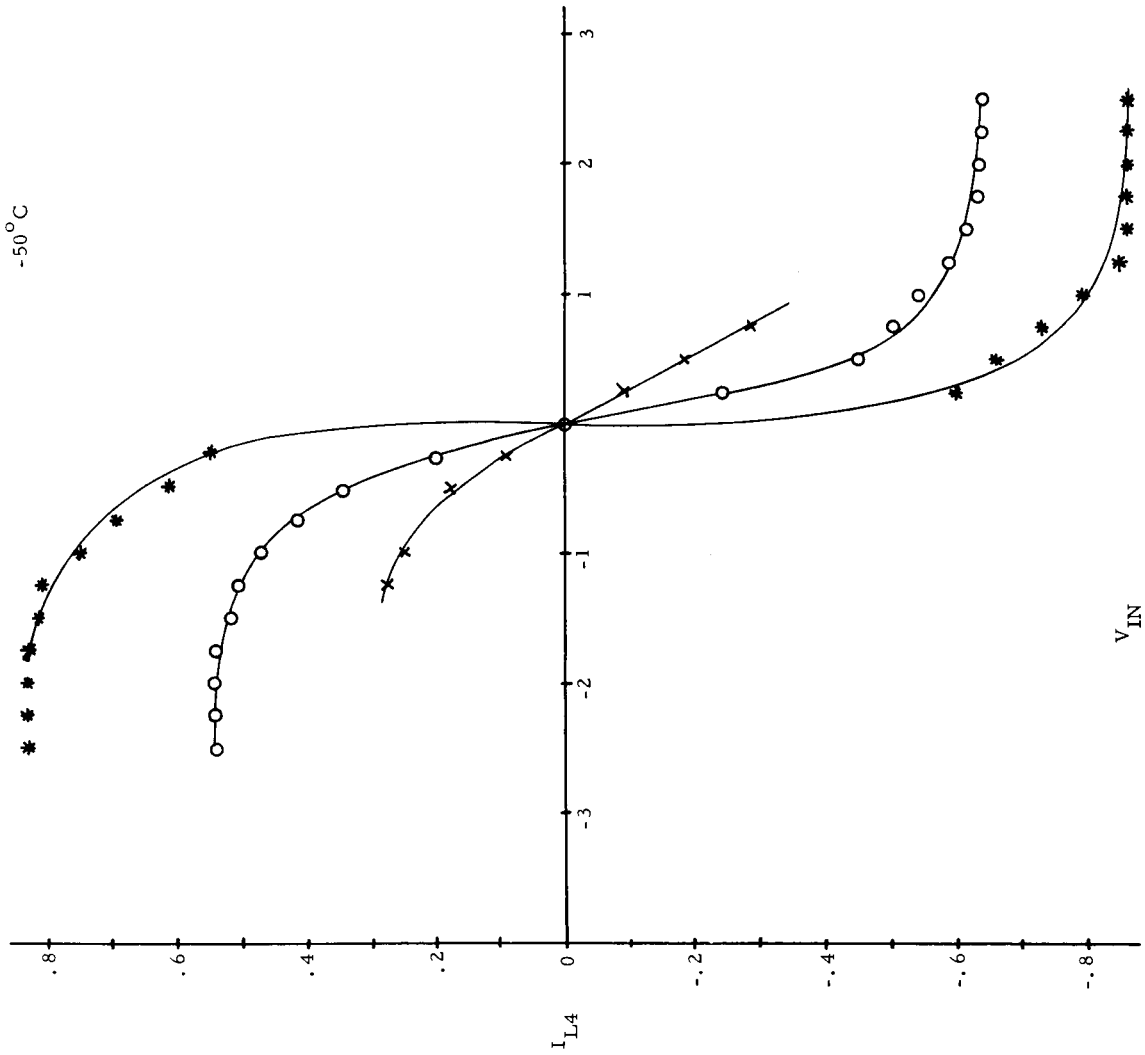

Figure 13. VIN vs IL4 for Nominal, Maximum and Minimum Parameter Settings (at -50 C)

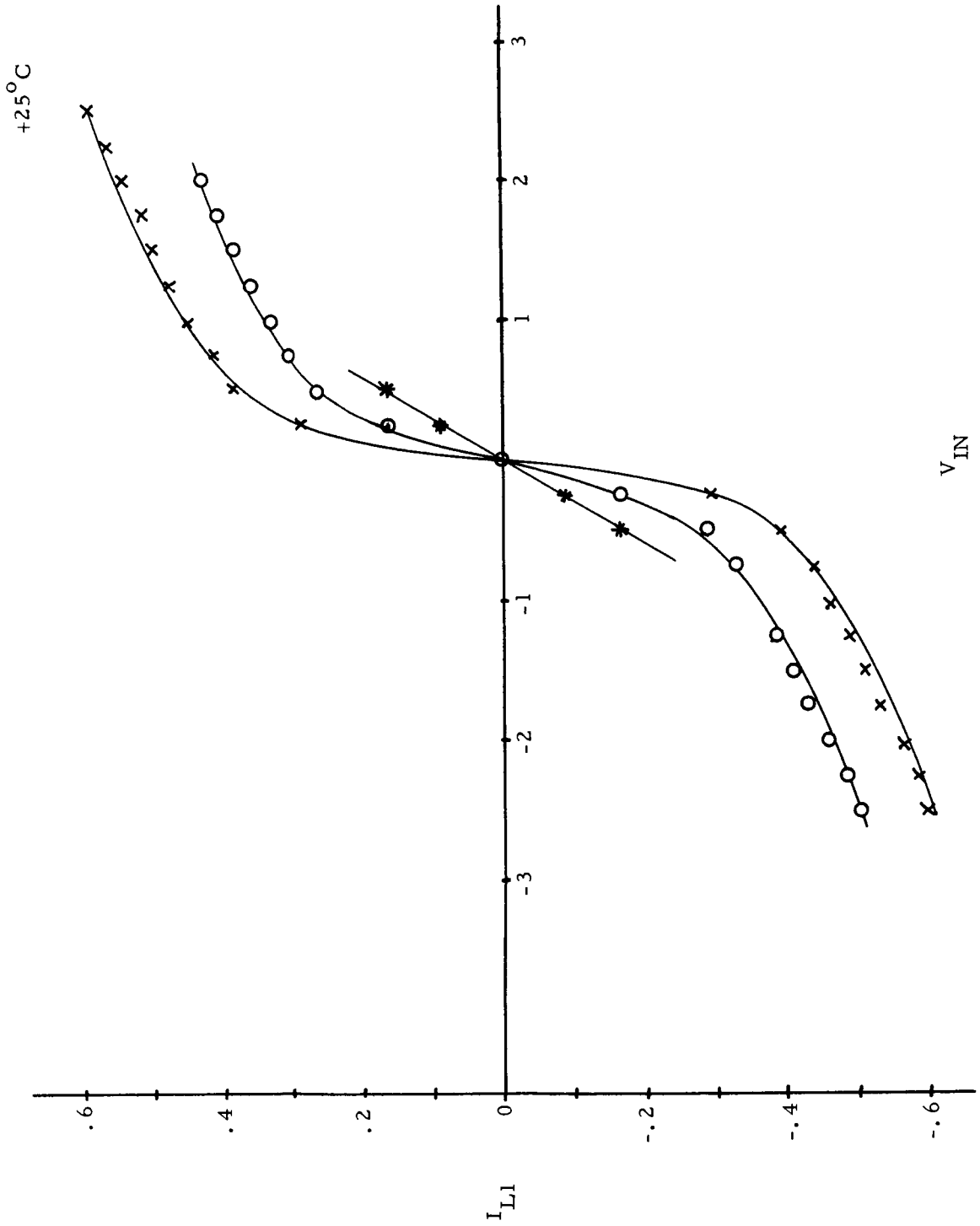

Figure 14. VIN vs IL1 for Nominal, Maximum and Minimum Parameter Settings (at +25 C)

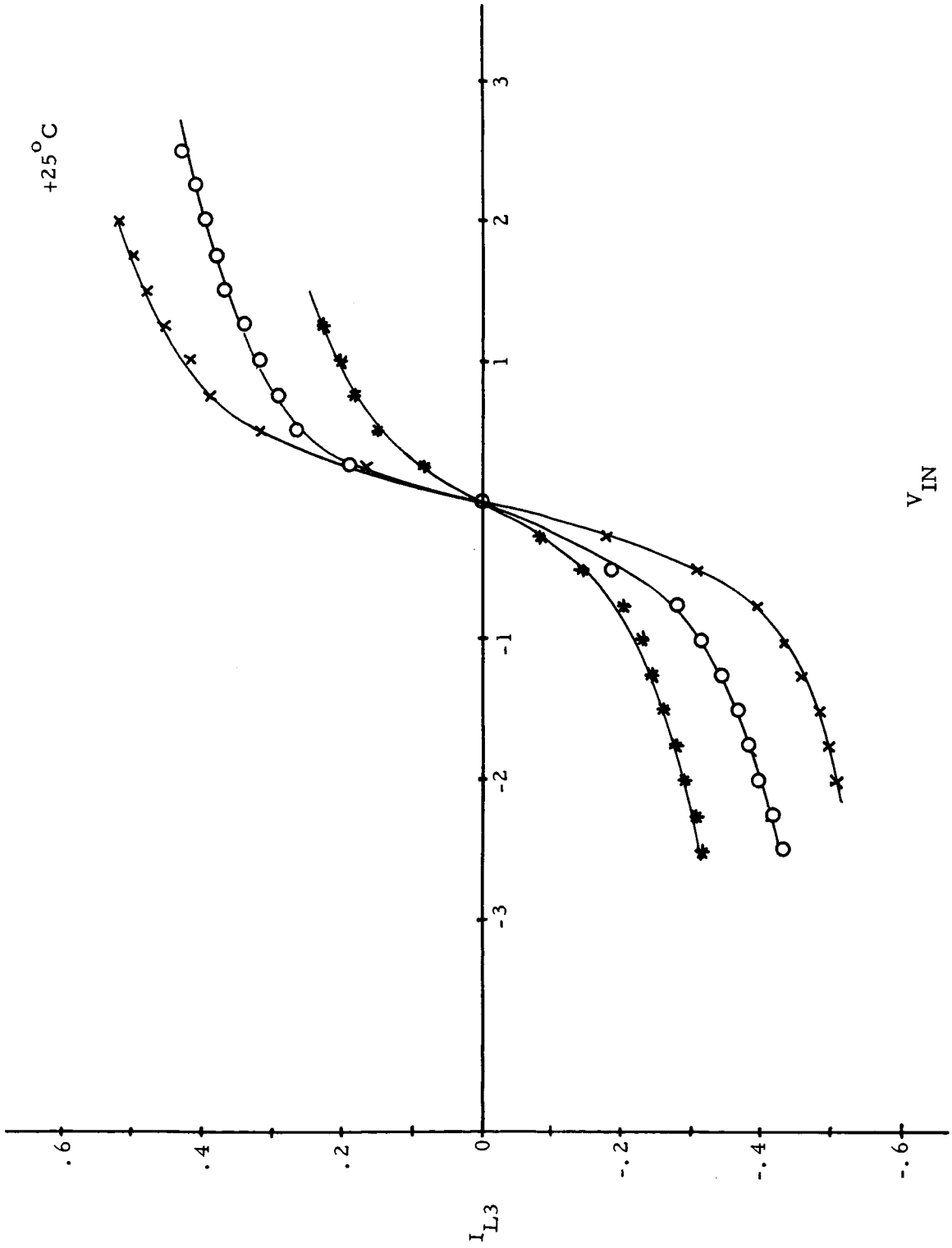

Figure 16. VIN vs IL3 for Nominal, Maximum, and Minimum Parameter Settings (at +25 C)

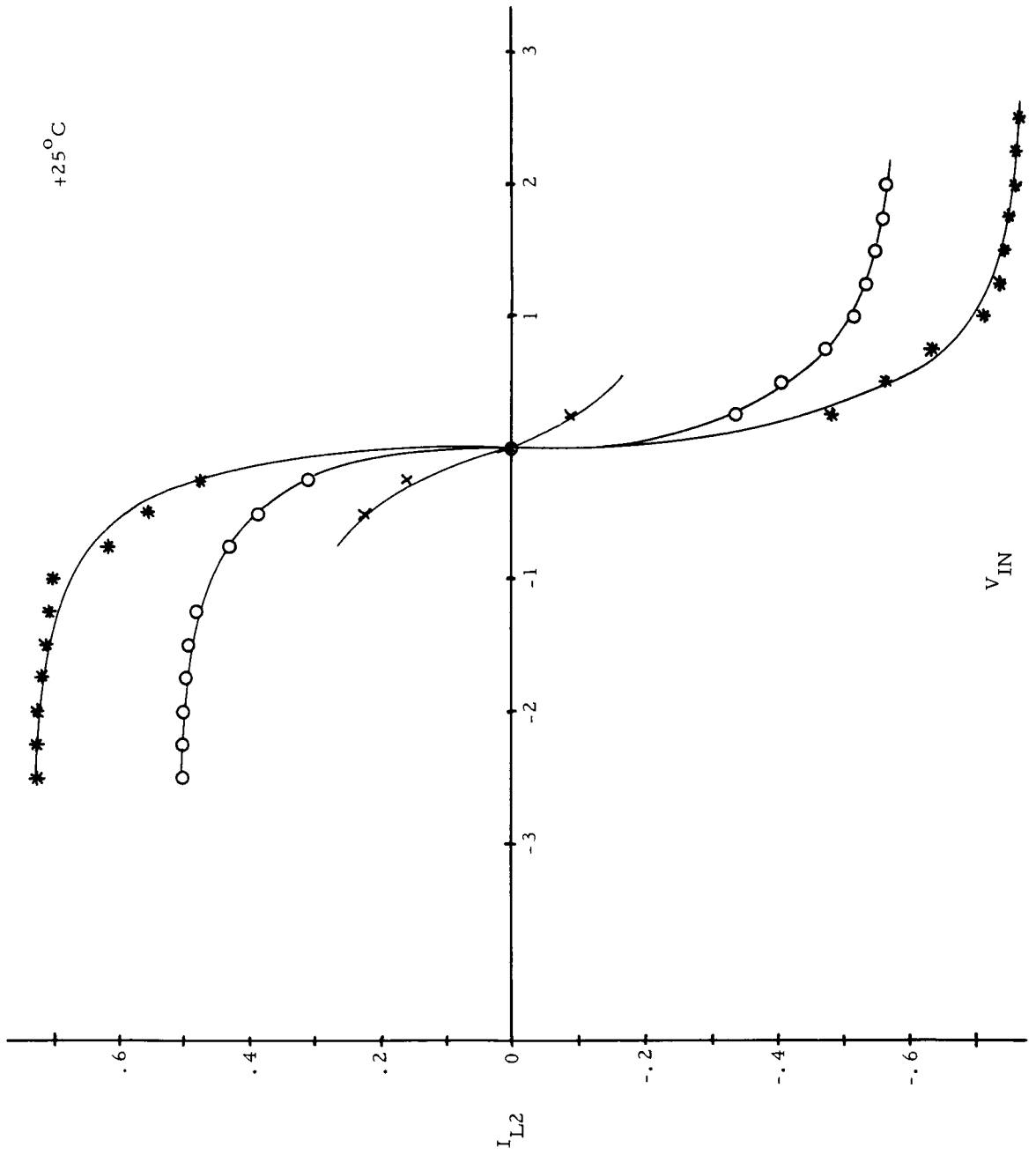

Figure 15. VIN vs IL2 for Nominal, Maximum, and Minimum Parameter Settings (at +25 C)

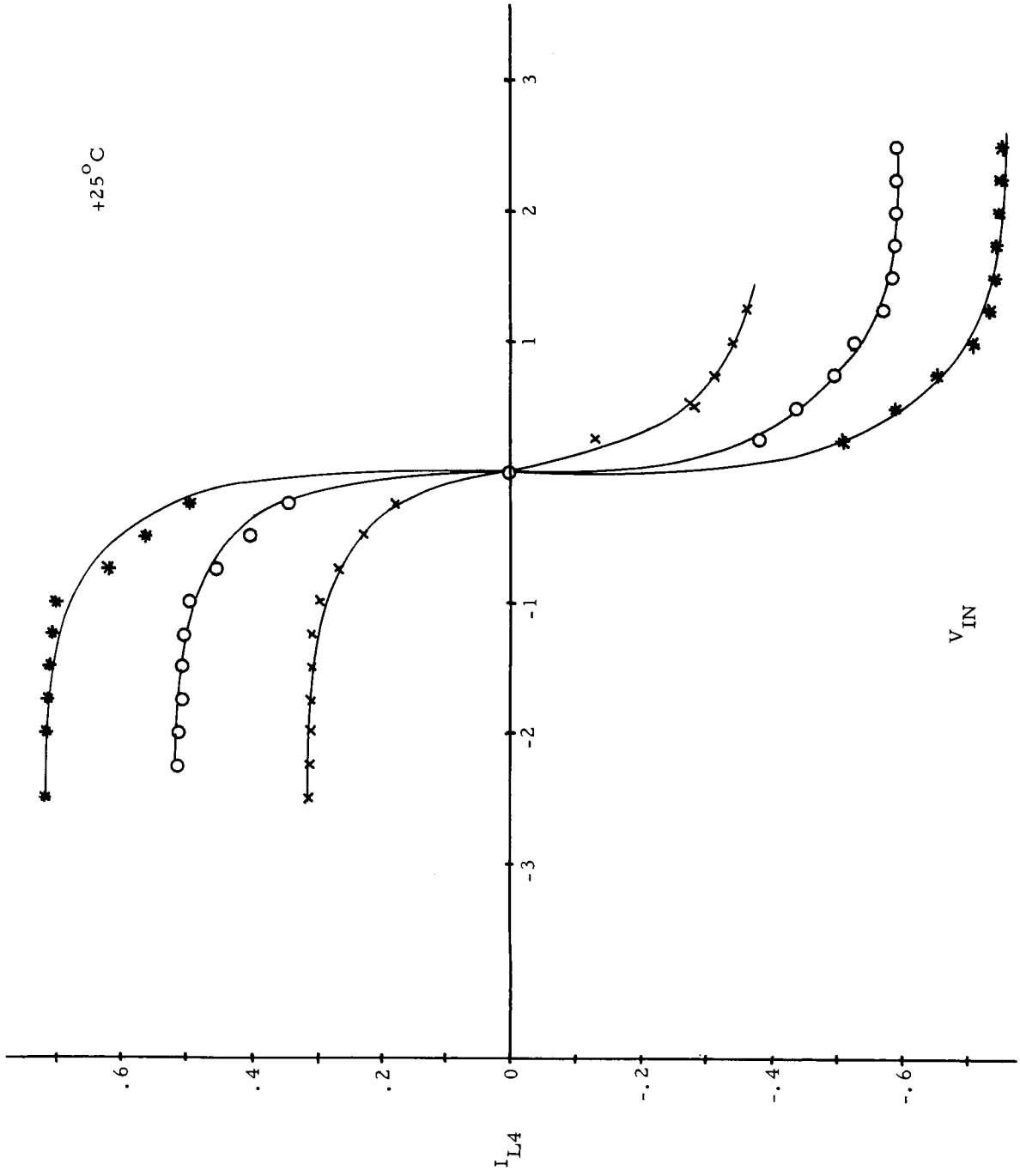

Figure 17. VIN vs IL4 for Nominal, Maximum, and Minimum Parameter Settings (at +25 C)

III. INPUT PARAMETER DATA

1. INTRODUCTION

In order to perform the circuit analysis necessary information for each input parameter consists of:

A. The nominal value

B. The maximum and minimum tolerance

C. The temperature dependence of the parameter

The necessary input parameter information was obtained from Figure 1 , commercial specifications, component manufacturers, and Autonetics' component specialists.

2. SOURCES OF INPUT PARAMETER DATA

2.1 Resistors

The resistance values were available from Figure 1 and tolerances were obtained verbally from JPL. A typical temperature coefficient for this type of resistor was obtained from an Autonetics resistor specialist.

2.2 Diodes

A diode is represented by a multi-parameter equivalent circuit. The diode dc equivalent circuit is obtained from the static characteristics. The broken curve in Figure 18 shows the V-I characteristics of a typical diode. Three piecewise linear approximations (represented by solid lines) have been made for the curve in Figure 18.

The dc equivalent circuit suggested by the linear approximations is shown in Figure 19. R_D is the reciprocal of the slope of the straight line approximations and V_D is the voltage intercept of the straight lines on the abscissa of the curve.

The intersection of the straight line approximations shown in Figure 18 as V_{12} and V_{23} represent the voltage points at which the equivalent circuit must change the parameter values. The computer automatically selects the correct value of R_D and V_D to be placed in the equivalent circuit.

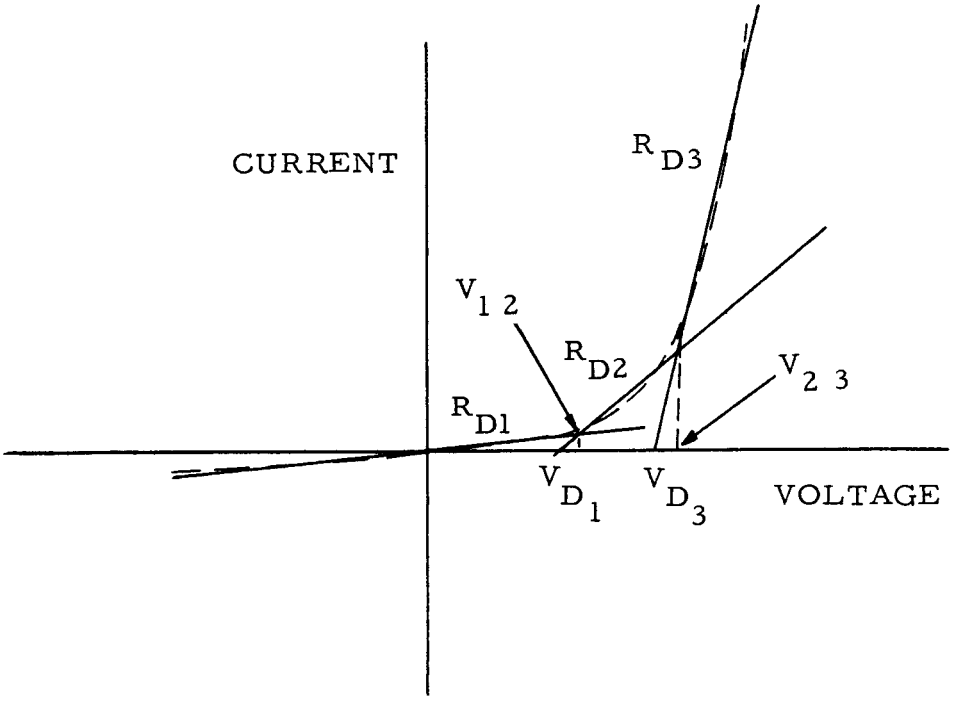

Figure 18. V-I Characteristics of a Typical Diode

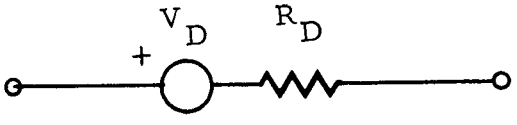

Figure 19. Equivalent Circuit Suggested by Linear Approximations

The typical capacitance of the IN459A diode is 5pf*. The shunt capacity can be neglected in the ac equivalent circuit for an operating frequency of 2KC. The ac equivalent circuit for the diode is therefore the same as the dc equivalent circuit shown in Figure 19 with the voltage source V_D removed.

Input parameters necessary for the diode equivalent circuits are therefore V_D and R_D. The commercial specification sheet* for the IN459A contains the nominal characteristic curve for the diode and the temperature dependence. Continental Device Corporation supplied the tolerances of one point on the curve. Since the tolerance of only one point was available, it was necessary to assume that each point varied by the same percentage in order to predict the tolerance on the input parameters.

2.3 Transistors

A transistor is also represented by a multi-parameter equivalent circuit. The broken curves in Figure 20 show the collector-emitter and base-emitter VI characteristics of a typical transistor. Linear approximations represented by solid lines have been made for these curves in the active region. The dc equivalent circuit which represents these curves is shown in Figure 21. The reciprocal of the slope of the linear approximation shown in Figure 20(b) is h_{ie} and the voltage intercept of the straight line on the absicssa of the curve represents V_B. The slope of the linear approximation made in Figure 20(a) is h_{oe} and the current intercept, I'_C of the straight line on the ordinate divided by I'_B, is equal to h_{FE}. I_{CBO} is the collector-base leakage current. The specification sheet for the 2N708** lists the minimum current gain as 3 at 100 mc and the collector base capacitance as 6pf at V_{CB} = 10V. At an operating frequency of 2KC the transistor capacities and cutoff frequency may be neglected. The ac equivalent circuit is therefore the same as the dc equivalent circuit shown in Figure 21 with V_B and I_{CBO} removed. However, the static value of h_{FE} is replaced by the dynamic value, h_{fe}. The necessary input parameters for the transistor are therefore:

h_{FE}

h_{fe}

---

*TI Commercial Spec Sheet

**Fairchild Commercial Spec. Sheet

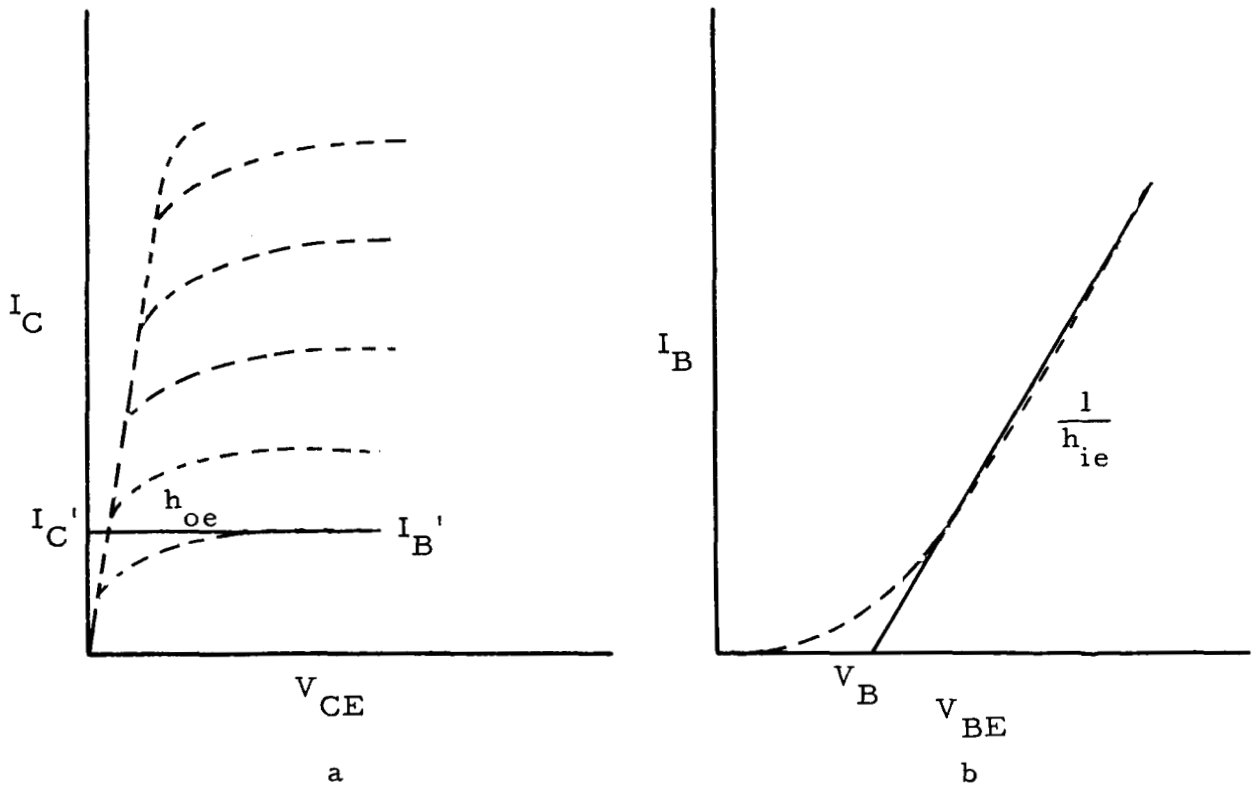

Figure 20. Collector-emitter and Base-emitter V-I Characteristics of Typical Transistor

h_{oe}

h_{ie}

V_B

I_{CBO}

Information necessary for h_{FE}, h_{oe}, and I_{CBO} was available from the commercial specification*. The specification contained the nominal value and temperature dependence of V_B; however, the tolerances were not available. A tolerance of ±20 percent was established to yield a margin of safety. h_{ie} was not available from the commercial specification or through contact with the transistor manufacturers. An approximation was made using the relation that

*Fairchild Commercial Spec. Sheet

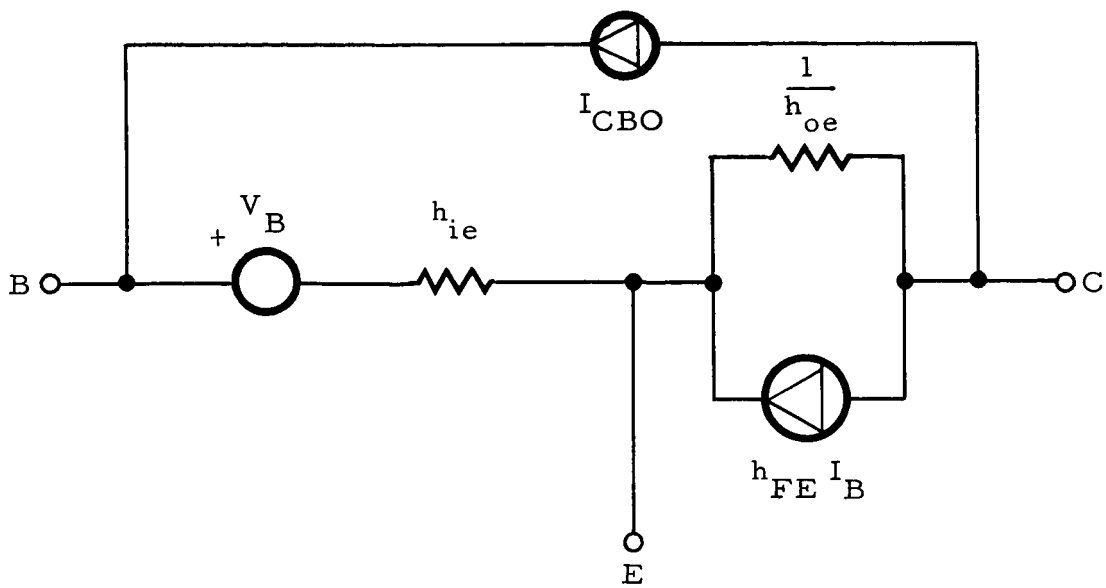

Figure 21. DC Equivalent Circuit Representing Collector-emitter and Base-emitter Characteristics of Typical Transistor

$h_{ie} = r'_b + (1+h_{FE})r_e$. r_e is the emitter-base diode forward resistance which is approximately equal to $\frac{K\,T}{q\,I_E}$ from the ideal diode equation.

The value of I_E was obtained from a hand calculation of the emitter current. The tolerance of h_{ie} was obtained by inserting the tolerances on h_{FE} into the equation.

Due to the large circuit resistance in series with h_{ie}, the error introduced in making the preceding approximation should be negligible. h_{fe} was not listed on the specification sheet due to the fact that the 2N708 is a switching transistor and the parameters listed are for that application. The transistor manufacturers were contacted concerning this parameter and were unable to supply the necessary information. The approximation that the h_{fe} is equal to h_{FE} was therefore necessary.

The following table presents the input parameter data used in the computer circuit analysis.

Table 3. Input Parameter Data Used in the Computer Circuit Analysis

Component Part	Parameter	Nom. Value @ 25°C	Max. Tolerance	Min. Tolerance	Value @ -50°C
Resistor	Resistance	Refer to Figure 1	1%	1%	Temp. Coefficient = 0.02%/°C
Diode	R_{D1}	52.5K	4%	4%	67.9K
Diode	R_{D2}	359 Ω	4%	4%	259 Ω
Diode	V_{D2}	.557V	4%	4%	.7098V
Diode	R_{D3}	57.2 Ω	4%	4%	47 Ω
Diode	V_{D3}	.618V	4%	4%	.766V
Diode	V_{12}	.561	4%	4%	.713V
Diode	V_{23}	.630	4%	4%	.779V
Transistor	h_{FE}	28	207%	46.5%	13.55
Transistor	h_{fe}	28	207%	46.5%	13.55
Transistor	h_{oe}	0			0
Transistor	h_{ie}	2950 Ω	197%	44%	1140 Ω
Transistor	V_B	.675V	20%	20%	.802V
Transistor	I_{CBO}	1.35 mua	525%	100%	.015 mua

IV. DC MANDEX WORST-CASE ANALYSIS

As part of the overall analysis, a DC and AC MANDEX Worst Case Analysis was performed on each part of the Log Compression Amplifier. The MANDEX analysis is explained in detail in Appendix I, therefore, no explanation of the program will be given at this point.

Of prime concern in the DC MANDEX analysis was the biasing of the diodes and transistors. The compression characteristics of this circuit depend upon symmetrical diode characteristics and theoretically there should be 0 volts dc across the diodes. Any voltage appearing would cause a dc offset of the characteristics which could result in improper circuit operation.

The results of the DC MANDEX analysis for both parts of the circuit are presented in Table 4. This table includes only the node voltages which are either diode or transistor biases.* For each bias voltage, the maximum, nominal, and minimum values to ground are presented.

The diodes are connected to the bases of transistors 1, 3, 5, 7, 9, 11, and 13. It can be noticed that the dc biases are negative. The greatest negative value (the minimum) which appears is for the diodes connected to the base of transistor #5, Q246 and is -0.109 volts. The diodes used in this circuit do not start turning on until a bias of approximately 0.56 volts anode to cathode is present. However, this offset may be enough to distort the compression characteristics. It should be remembered that this is the worst case condition that might occur, not the probable one. At nominal conditions, the dc offset of the diodes is between -0.057 and -0.043 volts, which should not disturb circuit operation at all.

The voltages presented in Table 4 are the node voltages of the circuit with reference to ground. It was of interest to investigate the transistor bias voltages V_{BE} and V_{CB}. These values have been extracted from Table 4 and presented in Table 5 for convenience. These are the nominal voltages only. It should be noted that maximum V_{BE} should not be obtained by subtracting minimum emitter voltage from the maximum base voltage. This will yield erroneous results

---

*Since the diodes are connected between the base of some of the transistors and ground, only transistor voltages appear in the table.

Table 4. Nominal and Worst Case Bias Voltages (in volts)

		1	2	3	4	5	6	7	8	9	10	11	12	13	14
	Transistor Number	241	242	243	244	246	247	248	249	251	252	253	254	256	257
BASE	MAX	-0.014	7.982	-.013	8.326	-.018	7.987	-.015	7.963	-.013	7.846	-.013	7.943	-.016	7.197
	NOM	- .047	5.377	-.043	5.555	-.057	5.332	-.048	5.280	-.043	5.123	-.043	5.148	-.045	5.339
	MIN	- .090	3.066	-.085	3.203	-.109	2.976	-.094	2.922	-.085	2.763	-.085	2.688	-.076	3.631
EMITTER	MAX	- .563	7.381	-.561	7.714	-.567	7.386	-.564	7.368	-.561	7.244	-.561	7.353	-.562	6.608
	NOM	- .739	4.594	-.733	4.752	-.749	4.550	-.740	4.498	-.736	4.342	-.735	4.366	-.738	4.554
	MIN	- .914	2.172	-.903	2.296	-.929	2.086	-.917	2.014	-.913	1.886	-.912	1.774	-.916	2.706
COLLECTOR	MAX	7.982	12.736	8.326	12.736	7.987	12.763	7.963	12.763	7.846	12.771	7.943	12.771	7.197	13.200
	NOM	5.377	11.487	5.555	11.487	5.332	11.526	5.280	11.526	5.123	11.527	5.148	11.527	5.339	12.000
	MIN	3.066	10.242	3.203	10.242	2.976	10.296	2.922	10.296	2.763	10.288	2.688	10.288	3.631	10.800

Table 5. Nominal Transistor Bias Voltage V_{BE} and V_{CB} (in volts)

	V_{BE}	V_{CB}
1	.692	5.424
2	.783	6.110
3	.690	5.598
4	.803	5.932
5	.692	5.389
6	.782	6.194
7	.692	5.328
8	.782	6.246
9	.693	5.166
10	.781	6.404
11	.692	5.191
12	.782	6.379
13	.693	5.384
14	.785	6.661

because it is not possible to physically realize both of the aforementioned conditions simultaneously. A check of the biases determined from

$$V_B\,(MAX) - V_E\,(MAX) \text{ and } V_C\,(MAX) - V_B\,(MAX)\,,$$

as well as

$$V_B\,(MIN) - V_E\,(MIN) \text{ and } V_C\,(MIN) - V_B\,(MIN),$$

indicate that there is no danger of parameter drift causing unallowable transistor bias voltages.

Power dissipations can be included as output variables in the MANDEX Program. However, since there was no interest in these values at JPL, they were omitted. If it is desired to determine these values some time in the future, the values of the node voltages and the impedances which have been presented are sufficient to determine any power of interest.

Overall, the dc stability of the circuit from worst case minimum to worst case maximum is acceptable.

V. AC MANDEX

A MANDEX AC Analysis was run on each of the two parts of the LCA. The primary reason for these runs was to obtain the worst case parameter values of the input parameter for worst case Envelope analysis of load currents IL1, IL2, IL3, and IL4. However, as a by-product of these runs, worst case high and low values of these currents were calculated. These values were calculated with 0.1 volts applied to each input.

Table 6. I_{L1} and I_{L2} in Milliamps for 0.1 Volt Input

	IL1	IL2
MAXIMUM	.115	-.062
NOMINAL	.069	-.186
MINIMUM	.035	-.412

Table 7. I_{L3} and I_{L4} in Milliamps for 0.1 Volt Input

	IL3	IL4
MAXIMUM	.140	-.093
NOMINAL	.084	-.291
MINIMUM	.040	-.621

From the AC MANDEX results it was seen that the worst-case parameter values for I_{L1} minimum were in most cases the same as those for I_{L2} maximum. The same relationship also holds for I_{L1} maximum and I_{L2} minimum and the currents of part two. This implies that a worst case minimum for I_{L1} occurs at almost the same time a worst case maximum I_{L2} occurs. From Table 6 we can determine the nominal, maximum, and minimum values of the sum of the magnitudes of IL_1 and IL_2. These sums are respectively 0.255 milliamps, 0.527 milliamps, and 0.097 milliamps. This is a variation high

* The magnitudes can be added since the currents feed into opposite ends of a center topped transformer.

by a factor of 2.1 and a variation low by a factor of 1/2.6. Since the input to both parts of the circuit was .1 volt the magnitudes of all four currents cannot be added. However, when summed under proper input voltages the variations from nominal cannot help but be worse than the above indicates.

The AC MANDEX results also show that the change in h_{fe} of transistors Q242 and Q247 contributed 32 and 33 percent, respectively. to the change in I_{L1} at worst case maximum parameter values and 24 and 35 percent, respectively, at worst case minimum parameter values. The h_{fe} of transistors Q242, Q244, and Q247 contributed 18, 16, and 16 percent, respectively, to the change in I_{L2} at worst case maximum parameter values and 24, 21, and 22 percent, respectively, at worst case minimum parameter values.

The same results hold for I_{L3} and I_{L4} of part 2 where I_{L3} behaves similar to I_{L1} and I_{L4} similar to I_{L2}. h_{fe} of transistors Q252 and Q254 contribute 30 and 32 percent, respectively, to the change in I_{L3} at worst-case maximum parameter values and 22 and 23 percent, respectively, at worst-case minimum parameter values. h_{fe} of transistors Q252, Q254 and Q257 contribute 17, 16, and 13 percent, respectively, to the change in I_{L4} at worst case maximum parameter values and 23, 22, and 16 percent, respectively, at worst case minimum parameter values.

If it is desired that this circuit operate under worst-case conditions and the above-mentioned variations of current are not acceptable, then a transistor with tighter specification on h_{fe} must be used.

VI. DESCRIPTION OF THE OUTPUT OF ENVELOPE

Figure 22 is a list of circuit information which is pertinent to the routine. Lines 3 and 4 give the number of equivalent circuit components per active element. Figures 23 through 25 is a list of the fixed parameters at nominal, minimum, and maximum values.

Figure 26 is a list of the variable input parameter information. When analyzing the Log Compression Amplifier, the input voltage to each half of the circuit was varied. The list indicates that the input ac voltage, ENAC, was varied from -2.5 volts to 2.5 volts in 20 steps.

Figure 27 is a list of maximum, minimum, and nominal values of the diode parameters in three possible states. The cutoff parameters are the values of the diode parameters on the high resistance and low current portions of the diode curves. The saturated parameters are those of the low resistance, high current portion of the diode curve. The active parameters represent the diode on the portion of the diode curve between the high and low portions.

Figure 28 is the first page of the output solution data. It indicates which input variable is being varied and which output is being plotted and whether the plot is a maximum, minimum, or nominal plot. Figures 29, 30, and 31 give the value of the input variable, ENAC, at which the diode changed state and also gives the states of the diodes after the change. Figure 28 shows that at the start (with ENAC = -2.5 volts) diodes 1, 4, 5, and 8 were cutoff and diodes 2, 3, 6, and 7 were saturated. At ENAC = -2.0 volts, some of the diodes changed state and diodes 1, 4, 5, and 8 are cutoff while 2 is active and 3, 6, and 7 are saturated.

Figure 29 gives more of the same information. The same is true for the first part of Figure 30. The last part gives the values of the variable input, ENAC, at which no state could be found. An explanation of this occurrence will be given later in this section.

Figure 31 is a listing of the output solutions at each point through which the variable input parameter, ENAC, is varied. Column two is starred to indicate that it contains the output which is being plotted and also is the one being tested for worst case if a worst case test is required.

```
NUMBER OF FIXED INPUT PARAMETERS . . . . . . . . . . . . . . . . . . . . = 97

NUMBER OF VARIABLE INPUT PARAMETERS  . . . . . . . . . . . . . . . . . . = 1

NUMBER OF TRANSISTOR INPUT PARAMETERS PER TRANSISTOR . . . . . . . . . . = 5

NUMBER OF DIODE INPUT PARAMETERS PER DIODE . . . . . . . . . . . . . . . = 2

NUMBER OF OUTPUT VARIABLES . . . . . . . . . . . . . . . . . . . . . . . = 7

NUMBER OF OUTPUT VARIABLES TO BE TESTED FOR WORST CASE . . . . . . . . . = 0

NUMBER OF TRANSISTORS  . . . . . . . . . . . . . . . . . . . . . . . . . = 8

NUMBER OF DIODES . . . . . . . . . . . . . . . . . . . . . . . . . . . . = 8

ARE CRT'S REQUIRED                                                        YES

THE VALUE OF THE STEP SIZE USED IN THE PARTIAL ROUTINE IS 0.0100 PERCENT
```

Figure 22. Envelope

SYMBOL	NUMBER	MINIMUM	NOMINAL	MAXIMUM
RIN	1	1.600E 02	2.000E 02	2.400E 02
R556	2	9.900E 03	1.000E 04	1.010E 04
R557	3	5.059E 03	5.110E 03	5.161E 03
R559	4	9.900E 03	1.000E 04	1.010E 04
R561	5	3.128E 04	3.160E 04	3.192E 04
R562	6	5.059E 03	5.110E 03	5.161E 03
R563	7	9.900E 03	1.000E 04	1.010E 04
R564	8	8.999E 03	9.090E 03	9.181E 03
R566	9	5.059E 03	5.110E 03	5.161E 03
R567	10	9.900E 03	1.000E 04	1.010E 04
R568	11	3.128E 04	3.160E 04	3.192E 04
R569	12	5.059E 03	5.110E 03	5.161E 03
R571	13	1.198E 04	1.210E 04	1.222E 04
R572	14	9.900E 03	1.000E 04	1.010E 04
R573	15	8.999E 03	9.090E 03	9.181E 03
R574	16	5.059E 03	5.110E 03	5.161E 03
R577	17	9.900E 03	1.000E 04	1.010E 04
R578	18	3.128E 04	3.160E 04	3.192E 04
R579	19	4.594E 03	4.640E 03	4.686E 03
R581	20	9.900E 03	1.000E 04	1.010E 04
R582	21	8.999E 03	9.090E 03	9.181E 03
R583	22	5.059E 03	5.110E 03	5.161E 03
R584	23	9.900E 03	1.000E 04	1.010E 04
R586	24	3.128E 04	3.160E 04	3.192E 04
R587	25	4.594E 03	4.640E 03	4.686E 03
R588	26	1.198E 04	1.210E 04	1.222E 04
R591	27	5.940E 03	6.000E 03	6.060E 03
RL10	28	8.000E 01	1.000E 02	1.200E 02
RL20	29	8.000E 01	1.000E 02	1.200E 02
EIND	30	8.000E-01	1.000E 00	1.200E 00
E600	31	-7.200E 00	-6.000E 00	-4.800E 00
E120	32	9.600E 00	1.200E 01	1.440E 01
E500	33	0.	0.	0.

Figure 23. Fixed Input Parameters

AHIE	34	1.652E 03	2.950E 03	8.761E 03
DHIE	35	8.000E 00	1.000E 01	1.200E 01
VBEO	36	5.400E-01	6.750E-01	8.100E-01
HØEO	37	0.	0.	0.
HFEO	38	1.484E 01	2.800E 01	8.596E 01
AHIE	39	1.652E 03	2.950E 03	8.761E 03
DHIE	40	8.000E 00	1.000E 01	1.200E 01
VBEO	41	5.400E-01	6.750E-01	8.100E-01
HØEO	42	0.	0.	0.
HFEO	43	1.484E 01	2.800E 01	8.596E 01
AHIE	44	1.652E 03	2.950E 03	8.761E 03
DHIE	45	8.000E 00	1.000E 01	1.200E 01
VBEO	46	5.400E-01	6.750E-01	8.100E-01
HØEO	47	0.	0.	0.
HFEO	48	1.484E 01	2.800E 01	8.596E 01
AHIE	49	1.652E 03	2.950E 03	8.761E 03
DHIE	50	8.000E 00	1.000E 01	1.200E 01
VBEO	51	5.400E-01	6.750E-01	8.100E-01
HØEO	52	0.	0.	0.
HFEO	53	1.484E 01	2.800E 01	8.596E 01
AHIE	54	1.652E 03	2.950E 03	8.761E 03
DHIE	55	8.000E 00	1.000E 01	1.200E 01
VBEO	56	5.400E-01	6.750E-01	8.100E-01
HØEO	57	0.	0.	0.
HFEO	58	1.484E 01	2.800E 01	8.596E 01
AHIE	59	1.652E 03	2.950E 03	8.761E 03
DHIE	60	8.000E 00	1.000E 01	1.200E 01
VBEO	61	5.400E-01	6.750E-01	8.100E-01
HØEO	62	0.	0.	0.
HFEO	63	1.484E 01	2.800E 01	8.596E 01
AHIE	64	1.652E 03	2.950E 03	8.761E 03
DHIE	65	8.000E 00	1.000E 01	1.200E 01
VBEO	66	5.400E-01	6.750E-01	8.100E-01
HØEO	67	0.	0.	0.
HFEO	68	1.484E 01	2.800E 01	8.596E 01
AHIE	69	1.652E 03	2.950E 03	8.761E 03
DHIE	70	8.000E 00	1.000E 01	1.200E 01
VBEO	71	5.400E-01	6.750E-01	8.100E-01
HØEO	72	0.	0.	0.
HFEO	73	1.484E 01	2.800E 01	8.596E 01
ICBØ	74	0.	1.350E-09	8.437E-09
ICBØ	75	0.	1.350E-09	8.437E-09
ICBØ	76	0.	1.350E-09	8.437E-09
ICBØ	77	0.	1.350E-09	8.437E-09

Figure 24. Fixed Input Parameters (Cont)

ICB0	78	0.	1.350E-09	8.437E-09
ICB0	79	0.	1.350E-09	8.437E-09
ICB0	80	0.	1.350E-09	8.437E-09
ICB0	81	0.	1.350E-09	8.437E-09
R580	82	3.760E 02	4.700E 02	5.640E 02
R590	83	3.760E 02	4.700E 02	5.640E 02
R565	84	3.760E 02	4.700E 02	5.640E 02
R575	85	3.760E 02	4.700E 02	5.640E 02
R558	86	1.568E 02	1.960E 02	2.352E 02
R619	87	8.000E 01	1.000E 02	1.200E 02
R576	88	1.568E 02	1.960E 02	2.352E 02
RD1	89	5.040E 04	5.250E 04	5.460E 04
RD2	90	5.040E 04	5.250E 04	5.460E 04
RD3	91	5.040E 04	5.250E 04	5.460E 04
RD4	92	5.040E 04	5.250E 04	5.460E 04
RD5	93	5.040E 04	5.250E 04	5.460E 04
RD6	94	5.040E 04	5.250E 04	5.460E 04
RD7	95	5.040E 04	5.250E 04	5.460E 04
RD8	96	5.040E 04	5.250E 04	5.460E 04
IL20	97	0.	0.	0.

Figure 25. Fixed Input Parameters (Cont)

VARIABLE INPUT PARAMETERS

SYMBØL	NUMBER	MINIMUM	NØMINAL	MAXIMUM	INITIAL	FINAL	NØ. ØF STEPS
ENAC	1	-2.000E 00	5.000E-01	2.500E 00	-2.500E 00	2.500E 00	20.0

Figure 26. Variable Input Parameters

		CUTOFF PARAMETERS			ACTIVE PARAMETERS			SATURATED PARAMETERS		
SYMBOL	NO	MINIMUM	NOMINAL	MAXIMUM	MINIMUM	NOMINAL	MAXIMUM	MINIMUM	NOMINAL	MAXIMUM
Q1-RD10	1	5.040E 04	5.250E 04	5.460E 04	3.446E 02	3.590E 02	3.734E 02	5.491E 01	5.720E 01	5.949E 01
Q1-ED10	2	-0.	-0.	-0.	5.347E-01	5.570E-01	5.793E-01	5.933E-01	6.180E-01	6.427E-01
Q2-RD20	3	5.040E 04	5.250E 04	5.460E 04	3.446E 02	3.590E 02	3.734E 02	5.491E 01	5.720E 01	5.949E 01
Q2-ED20	4	-0.	-0.	-0.	5.347E-01	5.570E-01	5.793E-01	5.933E-01	6.180E-01	6.427E-01
Q3-RD30	5	5.040E 04	5.250E 04	5.460E 04	3.446E 02	3.590E 02	3.734E 02	5.491E 01	5.720E 01	5.949E 01
Q3-ED30	6	-0.	-0.	-0.	5.347E-01	5.570E-01	5.793E-01	5.933E-01	6.180E-01	6.427E-01
Q4-RD40	7	5.040E 04	5.250E 04	5.460E 04	3.446E 02	3.590E 02	3.734E 02	5.491E 01	5.720E 01	5.949E 01
Q4-ED40	8	-0.	-0.	-0.	5.347E-01	5.570E-01	5.793E-01	5.933E-01	6.180E-01	6.427E-01
Q5-RD50	9	5.040E 04	5.250E 04	5.460E 04	3.446E 02	3.590E 02	3.734E 02	5.491E 01	5.720E 01	5.949E 01
Q5-ED50	10	-0.	-0.	-0.	5.347E-01	5.570E-01	5.793E-01	5.933E-01	6.180E-01	6.427E-01
Q6-RD60	11	5.040E 04	5.250E 04	5.460E 04	3.446E 02	3.590E 02	3.734E 02	5.491E 01	5.720E 01	5.949E 01
Q6-ED60	12	-0.	-0.	-0.	5.347E-01	5.570E-01	5.793E-01	5.933E-01	6.180E-01	6.427E-01
Q7-RD70	13	5.040E 04	5.250E 04	5.460E 04	3.446E 02	3.590E 02	3.734E 02	5.491E 01	5.720E 01	5.949E 01
Q7-ED70	14	-0.	-0.	-0.	5.347E-01	5.570E-01	5.793E-01	5.933E-01	6.180E-01	6.427E-01
Q8-RD80	15	5.040E 04	5.250E 04	5.460E 04	3.446E 02	3.590E 02	3.734E 02	5.491E 01	5.720E 01	5.949E 01
Q8-ED80	16	-0.	-0.	-0.	5.347E-01	5.570E-01	5.793E-01	5.933E-01	6.180E-01	6.427E-01

Figure 27. Diode Input Parameters

```
SOLUTIONS FOR ALL OUTPUT VARIABLES WITH OUTPUT VARIABLE NO.   1 -- **  IL1 ** BEING
 TESTED FOR A      NOMINAL       AS INPUT PARAMETER NO.   1 -- ENAC -- IS VARIED

          POINTS OF CHANGE OF CIRCUIT STATE AND STATES OF TRANSISTORS
                          AND DIODES AT THOSE POINTS

                           POINTS OF CHANGE OF STATE

                             ******************
                             ENAC  =  -2.500E 00
                            NEW            STATES
                OFF   1           4   5           8
                ACT
                SAT       2   3           6   7

                             ******************
                             ENAC  =  -2.000E 00
                            NEW            STATES
                OFF   1           4   5           8
                ACT       2
                SAT           3           6   7
```

Figure 28. Output Solution Data

```
                  ******************
                  ENAC   =   -7.500E-01
                 NEW              STATES
ØFF    1    2        4    5            8
ACT              3
SAT                            6    7

                  ******************
                  ENAC   =   -2.500E-01
                 NEW              STATES
ØFF    1    2    3    4    5            8
ACT                            6
SAT                                 7

                  ******************
                  ENAC   =    2.500E-01
                 NEW              STATES
ØFF    1    2    3    4        6    7
ACT                       5
SAT                                     8

                  ******************
                  ENAC   =    5.000E-01
                 NEW              STATES
```

Figure 29. Output Solution Data (Cont)

```
OFF   1   2   3           6   7
ACT               4
SAT                   5           8

            ******************
            ENAC  =   1.000E 00
           NEW            STATES
OFF   1   2   3           6   7
ACT
SAT               4   5           8

            ******************
            ENAC  =   1.250E 00
           NEW            STATES
OFF       2   3           6   7
ACT   1
SAT               4   5           8
POINTS OF TRANSITION WHERE NO STATE WAS FOUND
            ENAC   = -1.000E 00
            ENAC   =  2.250E 00
            ENAC   =  2.500E 00
```

Figure 30. Output Solution Data (Cont)

INPUT PARAMETER	** IL1 **	IL2	VBE7	VCB7	VBE8	VCB8	VOUT
NO. 1 -- ENAC							
-2.500E 00	-5.042E-04	5.042E-04	1.460E-02	3.113E-01	-6.118E-02	1.045E 01	-3.639E 00
-2.250E 00	-4.810E-04	5.032E-04	1.460E-02	3.113E-01	-6.118E-02	1.045E 01	-3.639E 00
-2.000E 00	-4.577E-04	5.004E-04	1.460E-02	3.113E-01	-6.118E-02	1.045E 01	-3.639E 00
-1.750E 00	-4.342E-04	4.946E-04	1.460E-02	3.113E-01	-6.118E-02	1.045E 01	-3.639E 00
-1.500E 00	-4.107E-04	4.888E-04	1.460E-02	3.113E-01	-6.118E-02	1.045E 01	-3.639E 00
-1.250E 00	-3.872E-04	4.830E-04	1.460E-02	3.113E-01	-6.118E-02	1.045E 01	-3.639E 00
-1.000E 00	0.	0.	0.	0.	0.	0.	0.
-7.500E-01	-3.306E-04	4.350E-04	1.460E-02	3.117E-01	-6.117E-02	1.045E 01	-3.638E 00
-5.000E-01	-2.934E-04	3.801E-04	1.460E-02	3.122E-01	-6.117E-02	1.045E 01	-3.638E 00
-2.500E-01	-1.669E-04	3.054E-04	1.455E-02	3.244E-01	-6.099E-02	1.044E 01	-3.628E 00
-0.	0.	0.	5.813E-05	4.689E 00	5.091E-04	6.752E 00	0.
2.500E-01	1.682E-04	-3.366E-04	-1.274E-02	8.543E 00	5.481E-02	3.495E 00	3.203E 00
5.000E-01	2.656E-04	-4.116E-04	-1.278E-02	8.556E 00	5.500E-02	3.484E 00	3.214E 00
7.500E-01	3.028E-04	-4.665E-04	-1.279E-02	8.557E 00	5.500E-02	3.484E 00	3.214E 00
1.000E 00	3.341E-04	-5.209E-04	-1.279E-02	8.557E 00	5.501E-02	3.484E 00	3.214E 00
1.250E 00	3.584E-04	-5.433E-04	-1.279E-02	8.557E 00	5.501E-02	3.484E 00	3.214E 00
1.500E 00	3.819E-04	-5.491E-04	-1.279E-02	8.557E 00	5.501E-02	3.483E 00	3.214E 00
1.750E 00	4.054E-04	-5.549E-04	-1.279E-02	8.557E 00	5.501E-02	3.483E 00	3.214E 00
2.000E 00	4.288E-04	-5.607E-04	-1.279E-02	8.557E 00	5.501E-02	3.483E 00	3.214E 00
2.250E 00	0.	0.	0.	0.	0.	0.	0.
2.500E 00	0.	0.	0.	0.	0.	0.	0.

Figure 31. Output Solution Data (Cont)

Due to the large number of input parameters on the log compression amplifier it was necessary to break the circuit into two parts. To compensate for this break, the output impedance of the first part was calculated and used as an input to the second part and the input impedance of the second part was calculated and used as a load on the first part.

To check the loading effect of the second part on the first part, loads varying from 4K ohms to open circuit were put in parallel with R_{591}. In no case was the change in I_{L1} or I_{L2} more than 0.3 percent.

Using the Envelope 7094 Computer Program, each of the four output currents were calculated with the input parameters set at nominal and at both worst case minimum and worst case maximum values with respect to each output current. These calculations were made at temperature settings of 25 C and -50 C.

The first part of the circuit was analyzed by varying the input ac voltage from -2.5 volts to 2.5 volts in 20 steps. With the input parameters set at the nominal 25 C values, IL1, the first load current varied from -0.504 ma to 0.429 ma. These values were obtained from Figure 30. It should be noted in this figure that there were three points of input voltage, ENAC, at which no solutions were found. The first point, -1.0 volts, has no solution because the diode voltage of one or more of the diodes were such as to place the diodes in a transition region. This is to say, with the diodes in one state, the node voltage solutions indicate a different state. When this state is tried, the solution indicates the previous state. When using piecewise linear approximations of curves, an occurrence such as this is always possible. The other two points of no solution are caused for a different reason. The envelope routine can only try to use states in the list which the analyst gives it. The correct diode states for these two points were not in the list, and therefore no solutions were found.

Figure 35 is the output solution data with the input parameters set to give a worst case maximum solution of load current on IL1. As expected, the magnitude of IL1 drifted high. With a -2.5 volts input the nominal value of IL1 was -0.504 ma while at worst case maximum IL1 was -0.610 ma. Figure 40 is the output solution data with the input parameters set to give a worst case minimum solution. The points at which no solutions were found are due to the reasons previously described.

Results from the analysis at worst case minimum parameter values for IL1 show that the gain of the first stage drops off enough so that the third diode tries to go out of the saturated region into the active region before the second diode does. From those points at which a solution was found, it can be seen that the current IL1 did drop in value with respect to the nominal run. The individual plots of load current 1, IL1 vs input voltage ENAC at 25 C for nominal, maximum and minimum values of IL1 are shown in Figures 39, 40, and 41.

The same results obtained with the parameters set at their 25 C values were obtained with the parameters set at their -50 C values with respect to the shape of the curves of IL1 vs ENAC. The nominal curves of IL1 vs ENAC at 25 C and -50 C were very nearly the same in magnitude. The worst case maximum curve at -50 C swung about as far away from the worst case maximum curve as 25 C swung away from the 25 C nominal curve. The output results for the -50 C runs, with respect to IL1, are shown in Figures 42 through 53. The individual curves of IL1 vs ENAC at -50 C for nominal, maximum, and minimum values of IL1 are shown in Figures 54, 55, and 56.

```
SOLUTIONS FOR ALL OUTPUT VARIABLES WITH OUTPUT VARIABLE NO.   1 -- **  IL1 ** BEING
  TESTED FOR A     MAXIMUM      AS INPUT PARAMETER NO.   1 -- ENAC -- IS VARIED

          POINTS OF CHANGE OF CIRCUIT STATE AND STATES OF TRANSISTORS
                          AND DIODES AT THOSE POINTS

                           POINTS OF CHANGE OF STATE

                             *******************
                             ENAC  =  -2.500E 00
                            NEW            STATES
                OFF   1           4   5           8
                ACT
                SAT       2   3           6   7

                             *******************
                             ENAC  =  -2.000E 00
                            NEW            STATES
                OFF   1           4   5           8
                ACT       2
                SAT           3           6   7
```

Figure 32. Output Solution Data (Cont)

```
                  ******************
                  ENAC  =  -7.500E-01
                 NEW              STATES
ØFF    1    2        4    5            8
ACT
SAT              3            6    7

                  ******************
                  ENAC  =  -5.000E-01
                 NEW              STATES
ØFF    1    2        4    5            8
ACT              3
SAT                           6    7

                  ******************
                  ENAC  =  -2.500E-01
                 NEW              STATES
ØFF    1    2    3    4    5            8
ACT
SAT                           6    7

                  ******************
                  ENAC  =   2.500E-01
                 NEW              STATES
```

Figure 33. Output Solution Data (Cont)

```
OFF   1   2   3   4       6   7
ACT
SAT                   5           8

            ******************
            ENAC  =   5.000E-01
           NEW            STATES
OFF   1   2   3           6   7
ACT               4
SAT                   5           8

            ******************
            ENAC  =   7.500E-01
           NEW            STATES
OFF   1   2   3           6   7
ACT
SAT               4   5           8

            ******************
            ENAC  =   1.250E 00
           NEW            STATES
OFF       2   3           6   7
ACT   1
SAT               4   5           8


            ******************
            ENAC  =   2.250E 00
           NEW            STATES
OFF       2   3           6   7
ACT
SAT   1           4   5           8
```

Figure 34. Output Solution Data (Cont)

INPUT PARAMETER ** IL1 **	IL2	VBE7	VCB7	VBE8	VCB8	VOUT
NO. 1 -- ENAC						
-2.500E 00	-6.099E-04	7.272E-04	2.838E-02	7.988E-01	9.426E-02	9.909E 00	-3.772E 00
-2.250E 00	-5.861E-04	7.257E-04	2.838E-02	7.988E-01	9.426E-02	9.909E 00	-3.772E 00
-2.000E 00	-5.620E-04	7.209E-04	2.838E-02	7.988E-01	9.426E-02	9.909E 00	-3.772E 00
-1.750E 00	-5.377E-04	7.126E-04	2.838E-02	7.988E-01	9.426E-02	9.909E 00	-3.772E 00
-1.500E 00	-5.134E-04	7.044E-04	2.838E-02	7.989E-01	9.426E-02	9.909E 00	-3.772E 00
-1.250E 00	-4.891E-04	6.961E-04	2.838E-02	7.989E-01	9.426E-02	9.909E 00	-3.772E 00
-1.000E 00	-4.648E-04	6.879E-04	2.838E-02	7.989E-01	9.426E-02	9.909E 00	-3.772E 00
-7.500E-01	-4.361E-04	6.150E-04	2.838E-02	7.992E-01	9.426E-02	9.909E 00	-3.772E 00
-5.000E-01	-3.922E-04	5.391E-04	2.838E-02	8.002E-01	9.428E-02	9.908E 00	-3.771E 00
-2.500E-01	-2.811E-04	4.578E-04	2.837E-02	8.046E-01	9.434E-02	9.904E 00	-3.767E 00
-0.	0.	0.	1.393E-02	5.322E 00	1.582E-01	6.073E 00	-0.
2.500E-01	2.814E-04	-4.772E-04	-7.603E-05	9.702E 00	2.201E-01	2.358E 00	3.653E 00
5.000E-01	3.784E-04	-5.574E-04	-8.781E-05	9.706E 00	2.202E-01	2.355E 00	3.656E 00
7.500E-01	4.210E-04	-6.332E-04	-9.084E-05	9.707E 00	2.202E-01	2.354E 00	3.657E 00
1.000E 00	4.499E-04	-7.030E-04	-9.167E-05	9.707E 00	2.202E-01	2.354E 00	3.657E 00
1.250E 00	4.750E-04	-7.280E-04	-9.190E-05	9.707E 00	2.202E-01	2.354E 00	3.657E 00
1.500E 00	4.993E-04	-7.362E-04	-9.199E-05	9.707E 00	2.202E-01	2.354E 00	3.657E 00
1.750E 00	5.236E-04	-7.445E-04	-9.209E-05	9.707E 00	2.202E-01	2.354E 00	3.657E 00
2.000E 00	5.479E-04	-7.527E-04	-9.217E-05	9.707E 00	2.202E-01	2.354E 00	3.657E 00
2.250E 00	5.721E-04	-7.589E-04	-9.225E-05	9.707E 00	2.202E-01	2.354E 00	3.657E 00
2.500E 00	5.959E-04	-7.603E-04	-9.227E-05	9.707E 00	2.202E-01	2.354E 00	3.657E 00

Figure 35. Output Solution Data (Cont)

```
SOLUTIONS FOR ALL OUTPUT VARIABLES WITH OUTPUT VARIABLE NO.   1 -- **  IL1 ** BEING
  TESTED FOR A      MINIMUM       AS INPUT PARAMETER NO.   1 -- ENAC -- IS VARIED

          POINTS OF CHANGE OF CIRCUIT STATE AND STATES OF TRANSISTORS
                          AND DIODES AT THOSE POINTS

                           POINTS OF CHANGE OF STATE

                             *******************
                             ENAC  =  -5.000E-01
                            NEW            STATES
                OFF   1   2   3   4   5           8
                ACT                       6   7
                SAT

                             *******************
                             ENAC  =  -2.500E-01
                            NEW            STATES
                OFF   1   2   3   4   5   6       8
                ACT                           7
                SAT
```

Figure 36. Output Solution Data (Cont)

```
                  ******************
                  ENAC  =   2.500E-01
                 NEW            STATES
ØFF    1   2   3   4   5   6   7
ACT                                  8
SAT

                  ******************
                  ENAC  =   5.000E-01
                 NEW            STATES
ØFF    1   2   3   4       6   7
ACT                    5           8
SAT
PØINTS ØF TRANSITIØN WHERE NØ STATE WAS FØUND
                  ENAC   = -2.500E 00
                  ENAC   = -2.250E 00
                  ENAC   = -2.000E 00
                  ENAC   = -1.750E 00
                  ENAC   = -1.500E 00
                  ENAC   = -1.250E 00
                  ENAC   = -1.000E 00
                  ENAC   = -7.500E-01
                  ENAC   =  7.500E-01
                  ENAC   =  1.000E 00
                  ENAC   =  1.250E 00
                  ENAC   =  1.500E 00
                  ENAC   =  1.750E 00
                  ENAC   =  2.000E 00
                  ENAC   =  2.250E 00
                  ENAC   =  2.500E 00
```

Figure 37. Output Solution Data (Cont)

INPUT PARAMETER ** IL1 **	IL2	VBE7	VCB7	VBE8	VCB8	VOUT
NO. 1 -- ENAC						
-2.500E 00	0.	0.	0.	0.	0.	0.
-2.250E 00	0.	0.	0.	0.	0.	0.
-2.000E 00	0.	0.	0.	0.	0.	0.
-1.750E 00	0.	0.	0.	0.	0.	0.
-1.500E 00	0.	0.	0.	0.	0.	0.
-1.250E 00	0.	0.	0.	0.	0.	0.
-1.000E 00	0.	0.	0.	0.	0.	0.
-7.500E-01	0.	0.	0.	0.	0.	0.
-5.000E-01	-1.680E-04	2.312E-04	3.456E-02	2.320E-01	8.245E-02	1.068E 01	-3.408E 00
-2.500E-01	-8.690E-05	1.551E-04	3.405E-02	3.772E-01	8.449E-02	1.055E 01	-3.287E 00
-0.	0.	0.	2.018E-02	4.351E 00	1.402E-01	7.212E 00	-0.
2.500E-01	8.689E-05	-1.513E-04	9.795E-03	7.327E 00	1.820E-01	4.708E 00	2.462E 00
5.000E-01	1.705E-04	-2.562E-04	8.891E-03	7.585E 00	1.856E-01	4.490E 00	2.676E 00
7.500E-01	0.	0.	0.	0.	0.	0.	0.
1.000E 00	0.	0.	0.	0.	0.	0.	0.
1.250E 00	0.	0.	0.	0.	0.	0.	0.
1.500E 00	0.	0.	0.	0.	0.	0.	0.
1.750E 00	0.	0.	0.	0.	0.	0.	0.
2.000E 00	0.	0.	0.	0.	0.	0.	0.
2.250E 00	0.	0.	0.	0.	0.	0.	0.
2.500E 00	0.	0.	0.	0.	0.	0.	0.

Figure 38. Output Solution Data (Cont)

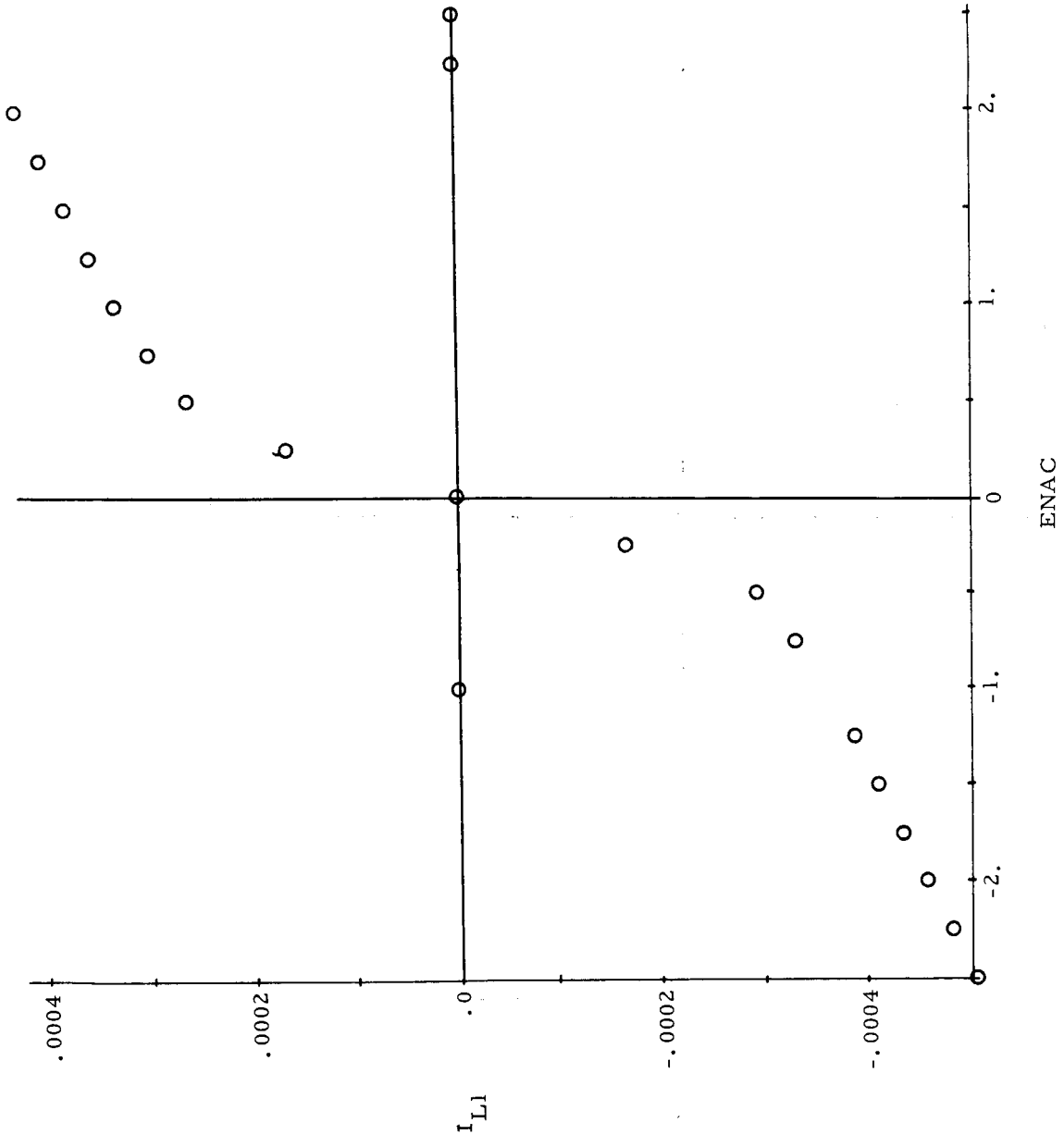

Figure 39. ENAC vs IL1 for Nominal IL1 (at 25 C)

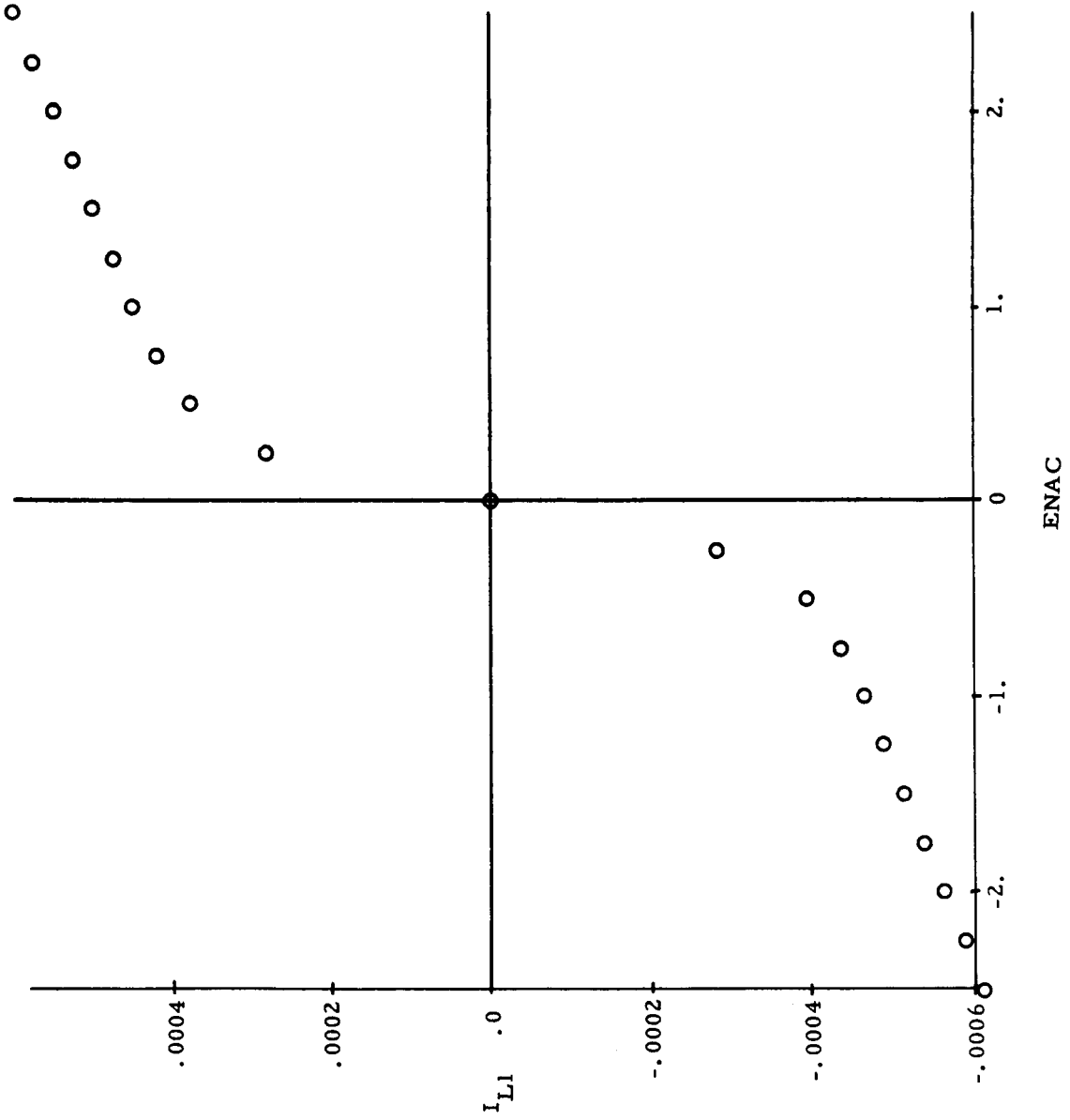

Figure 40. ENAC vs IL1 for Maximum IL1 (at 25 C)

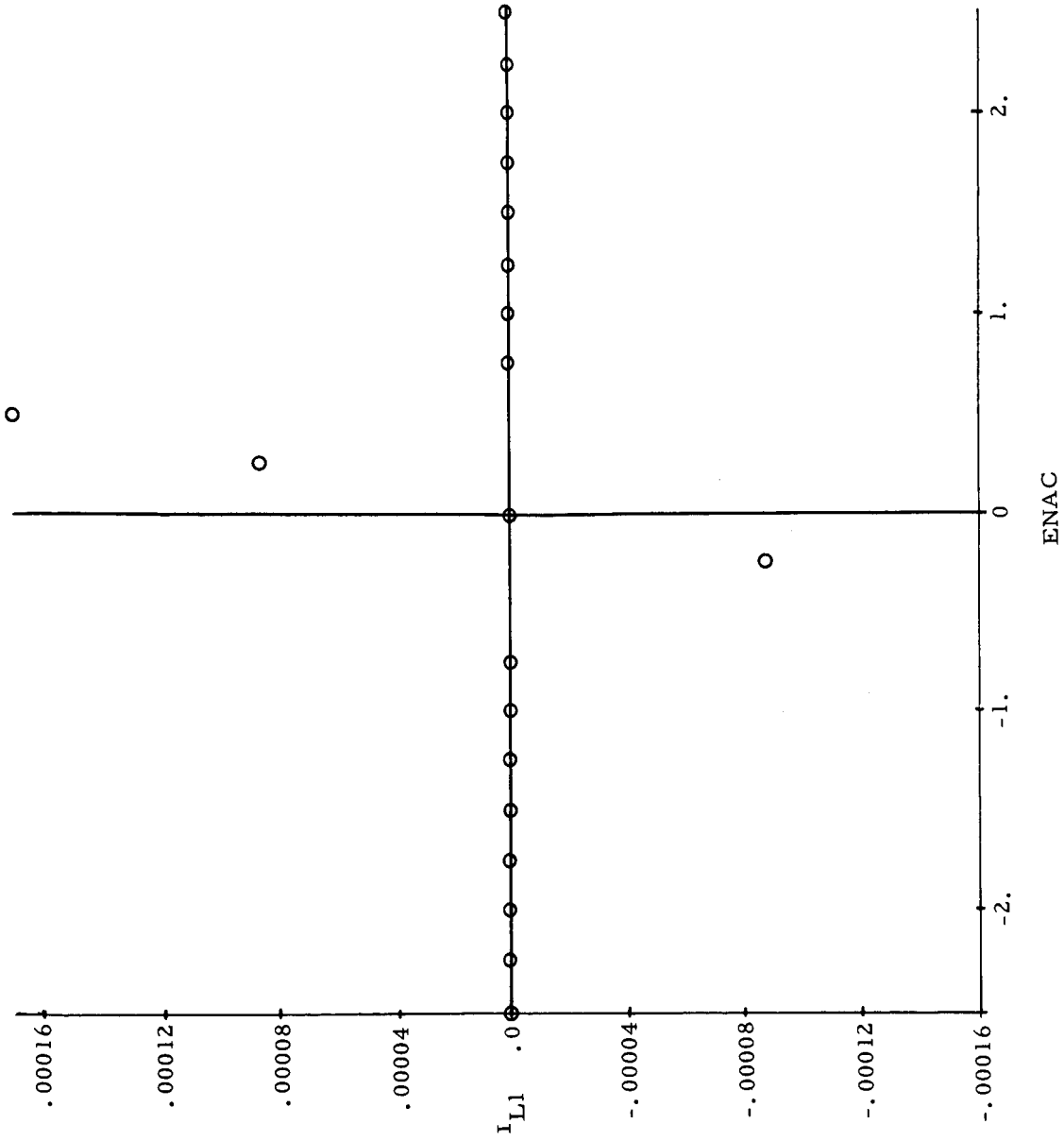

Figure 41. ENAC vs IL1 for Minimum IL1 (at 25 C)

```
SOLUTIONS FOR ALL OUTPUT VARIABLES WITH OUTPUT VARIABLE NO.   1 -- **  ILL ** BEING
  TESTED FOR A      NOMINAL       AS INPUT PARAMETER NO.   1 -- ENAC -- IS VARIED

          POINTS OF CHANGE OF CIRCUIT STATE AND STATES OF TRANSISTORS
                         AND DIODES AT THOSE POINTS

                          POINTS OF CHANGE OF STATE

                            ******************
                            ENAC  =  -2.500E 00
                           NEW            STATES
                OFF   1          4   5          8
                ACT
                SAT       2   3          6   7

                            ******************
                            ENAC  =  -1.250E 00
                           NEW            STATES
                OFF   1          4   5          8
                ACT       2
                SAT           3          6   7
```

Figure 42. Output Solution Data

```
                  ********************
                  ENAC  =  -1.000E 00
                 NEW              STATES
ØFF    1    2        4    5             8
ACT
SAT              3             6    7

                  ********************
                  ENAC  =  -7.500E-01
                 NEW              STATES
ØFF    1    2        4    5             8
ACT              3
SAT                            6    7

                  ********************
                  ENAC  =  -5.000E-01
                 NEW              STATES
ØFF    1    2    3    4    5             8
ACT
SAT                            6    7

                  ********************
                  ENAC  =  -2.500E-01
```

Figure 43. Output Solution Data (Cont)

```
              NEW                STATES
OFF    1    2    3    4    5    6         8
ACT
SAT                                 7

              *******************
              ENAC   =    2.500E-01
              NEW                STATES
OFF    1    2    3    4    5    6    7
ACT                                      8
SAT

              *******************
              ENAC   =    5.000E-01
              NEW                STATES
OFF    1    2    3    4         6    7
ACT                       5              8
SAT

              *******************
              ENAC   =    7.500E-01
              NEW                STATES
OFF    1    2    3              6    7

ACT                  4    5
SAT                                      8

              *******************
              ENAC   =    1.500E 00
              NEW                STATES
OFF         2    3              6    7
ACT    1             4
SAT                       5              6
```

Figure 44. Output Solution Data (Cont)

INPUT PARAMETER ** IL1 ** IL2 VBE7 VCB7 VBE8 VCB8 VOUT

NO. 1 -- ENAC

-2.500E 00	-5.181E-04	4.913E-04	1.507E-02	-1.155E 00	-5.325E-02	1.180E 01	-4.059E 00
-2.250E 00	-4.945E-04	4.907E-04	1.507E-02	-1.155E 00	-5.325E-02	1.180E 01	-4.059E 00
-2.000E 00	-4.710E-04	4.900E-04	1.507E-02	-1.155E 00	-5.325E-02	1.180E 01	-4.059E 00
-1.750E 00	-4.474E-04	4.894E-04	1.507E-02	-1.155E 00	-5.325E-02	1.180E 01	-4.059E 00
-1.500E 00	-4.239E-04	4.887E-04	1.507E-02	-1.155E 00	-5.325E-02	1.180E 01	-4.059E 00
-1.250E 00	-3.994E-04	4.641E-04	1.507E-02	-1.155E 00	-5.325E-02	1.180E 01	-4.059E 00
-1.000E 00	-3.750E-04	4.424E-04	1.507E-02	-1.155E 00	-5.325E-02	1.180E 01	-4.059E 00
-7.500E-01	-3.252E-04	3.984E-04	1.507E-02	-1.155E 00	-5.325E-02	1.180E 01	-4.059E 00
-5.000E-01	-2.289E-04	3.492E-04	1.507E-02	-1.154E 00	-5.324E-02	1.180E 01	-4.058E 00
-2.500E-01	-1.191E-04	2.473E-04	1.499E-02	-1.125E 00	-5.294E-02	1.178E 01	-4.035E 00
-0.	0.	0.	4.392E-05	3.853E 00	3.559E-04	7.691E 00	0.
2.500E-01	1.190E-04	-2.421E-04	-1.114E-02	7.580E 00	4.025E-02	4.631E 00	3.021E 00
5.000E-01	2.314E-04	-3.787E-04	-1.185E-02	7.816E 00	4.278E-02	4.436E 00	3.213E 00
7.500E-01	2.807E-04	-4.263E-04	-1.216E-02	7.921E 00	4.390E-02	4.351E 00	3.297E 00
1.000E 00	3.107E-04	-4.690E-04	-1.216E-02	7.921E 00	4.390E-02	4.350E 00	3.297E 00
1.250E 00	3.406E-04	-5.117E-04	-1.217E-02	7.922E 00	4.391E-02	4.350E 00	3.298E 00
1.500E 00	3.701E-04	-5.598E-04	-1.219E-02	7.931E 00	4.400E-02	4.342E 00	3.305E 00
1.750E 00	3.941E-04	-5.632E-04	-1.219E-02	7.931E 00	4.400E-02	4.342E 00	3.305E 00
2.000E 00	4.182E-04	-5.666E-04	-1.219E-02	7.931E 00	4.400E-02	4.342E 00	3.305E 00

Figure 45. Output Solution Data (Cont)

2.250E 00	4.422E-04	-5.699E-04	-1.219E-02	7.931E 00	4.400E-02	4.342E 00	3.305E 00
2.500E 00	4.662E-04	-5.733E-04	-1.219E-02	7.931E 00	4.400E-02	4.342E 00	3.305E 00

Figure 46. Output Solution Data (Cont)

```
SOLUTIONS FOR ALL OUTPUT VARIABLES WITH OUTPUT VARIABLE NO.   1 -- **  IL1 ** BEING
  TESTED FOR A      MAXIMUM      AS INPUT PARAMETER NO.   1 -- ENAC -- IS VARIED

          POINTS OF CHANGE OF CIRCUIT STATE AND STATES OF TRANSISTORS
                          AND DIODES AT THOSE POINTS

                           POINTS OF CHANGE OF STATE

                             *******************
                             ENAC  =  -2.500E 00
                            NEW            STATES
                OFF   1           4   5           8
                ACT
                SAT       2   3           6   7

                             *******************
                             ENAC  =  -1.250E 00
                            NEW            STATES
                OFF   1           4   5           8
                ACT       2
                SAT           3           6   7
```

Figure 47. Output Solution Data (Cont)

```
                  ******************
                  ENAC   =  -1.000E 00
                 NEW              STATES
ØFF    1    2        4    5            8
ACT
SAT              3            6    7

                  ******************
                  ENAC   =  -5.000E-01
                 NEW              STATES
ØFF    1    2        4    5            8
ACT              3
SAT                           6    7

                  ******************
                  ENAC   =  -2.500E-01
                 NEW              STATES
ØFF    1    2    3    4    5            8
ACT
SAT                           6    7

                  ******************
                  ENAC   =   2.500E-01
                 NEW              STATES
```

Figure 48. Output Solution Data (Cont)

```
ØFF   1   2   3   4       6   7
ACT                   5
SAT                               8

          *******************
          ENAC  =   5.000E-01
         NEW            STATES
ØFF   1   2   3           6   7
ACT               4
SAT                   5           8

          *******************
          ENAC  =   1.250E 00
         NEW            STATES
ØFF   1   2   3           6   7
ACT
SAT               4   5           8

          *******************
          ENAC  =   1.500E 00
         NEW            STATES
ØFF       2   3           6   7
ACT   1
SAT               4   5           8
```

Figure 49. Output Solution Data (Cont)

INPUT PARAMETER	** IL1 **	IL2	VBE7	VCB7	VBE8	VCB8	VOUT
NO. 1 -- ENAC							
-2.500E 00	-6.726E-04	8.190E-04	2.531E-02	-7.713E-01	5.521E-02	1.134E 01	-4.184E 00
-2.250E 00	-6.484E-04	8.180E-04	2.531E-02	-7.713E-01	5.521E-02	1.134E 01	-4.184E 00
-2.000E 00	-6.243E-04	8.169E-04	2.531E-02	-7.713E-01	5.521E-02	1.134E 01	-4.184E 00
-1.750E 00	-6.002E-04	8.158E-04	2.531E-02	-7.713E-01	5.521E-02	1.134E 01	-4.184E 00
-1.500E 00	-5.760E-04	8.148E-04	2.531E-02	-7.713E-01	5.521E-02	1.134E 01	-4.184E 00
-1.250E 00	-5.497E-04	7.733E-04	2.531E-02	-7.712E-01	5.521E-02	1.134E 01	-4.184E 00
-1.000E 00	-5.225E-04	7.145E-04	2.531E-02	-7.711E-01	5.521E-02	1.134E 01	-4.184E 00
-7.500E-01	-4.948E-04	6.470E-04	2.531E-02	-7.710E-01	5.521E-02	1.134E 01	-4.184E 00
-5.000E-01	-4.285E-04	5.767E-04	2.530E-02	-7.699E-01	5.523E-02	1.134E 01	-4.183E 00
-2.500E-01	-2.443E-04	4.978E-04	2.529E-02	-7.656E-01	5.527E-02	1.134E 01	-4.180E 00
-0.	0.	0.	1.043E-02	4.350E 00	1.105E-01	7.103E 00	-0.
2.500E-01	2.445E-04	-5.071E-04	-3.649E-03	9.198E 00	1.628E-01	3.091E 00	3.960E 00
5.000E-01	4.021E-04	-6.121E-04	-3.704E-03	9.217E 00	1.630E-01	3.075E 00	3.976E 00
7.500E-01	4.429E-04	-6.805E-04	-3.706E-03	9.218E 00	1.630E-01	3.075E 00	3.976E 00
1.000E 00	4.836E-04	-7.490E-04	-3.707E-03	9.218E 00	1.630E-01	3.074E 00	3.977E 00
1.250E 00	5.219E-04	-8.173E-04	-3.708E-03	9.218E 00	1.630E-01	3.074E 00	3.977E 00
1.500E 00	5.473E-04	-8.406E-04	-3.708E-03	9.218E 00	1.630E-01	3.074E 00	3.977E 00
1.750E 00	5.717E-04	-8.461E-04	-3.708E-03	9.218E 00	1.630E-01	3.074E 00	3.977E 00
2.000E 00	5.960E-04	-8.516E-04	-3.708E-03	9.218E 00	1.630E-01	3.074E 00	3.977E 00
2.250E 00	6.204E-04	-8.571E-04	-3.708E-03	9.218E 00	1.630E-01	3.074E 00	3.977E 00
2.500E 00	6.448E-04	-8.626E-04	-3.708E-03	9.218E 00	1.630E-01	3.074E 00	3.977E 00

Figure 50. Output Solution Data (Cont)

SOLUTIONS FOR ALL OUTPUT VARIABLES WITH OUTPUT VARIABLE NO. 1 -- ** IL1 ** BEING TESTED FOR A MINIMUM AS INPUT PARAMETER NO. 1 -- ENAC -- IS VARIED

POINTS OF CHANGE OF CIRCUIT STATE AND STATES OF TRANSISTORS AND DIODES AT THOSE POINTS

POINTS OF CHANGE OF STATE

****

ENAC = -5.000E-01

	NEW					STATES		
OFF	1	2	3	4	5	6	7	8
ACT								
SAT								

****

ENAC = 5.000E-01

	NEW					STATES		
OFF	1	2	3	4	5	6	7	
ACT								8
SAT								

POINTS OF TRANSITION WHERE NO STATE WAS FOUND

Figure 51. Output Solution Data (Cont)

```
ENAC    = -2.500E 00
ENAC    = -2.250E 00
ENAC    = -2.000E 00
ENAC    = -1.750E 00
ENAC    = -1.500E 00
ENAC    = -1.250E 00
ENAC    = -1.000E 00
ENAC    = -7.500E-01
ENAC    =  1.000E 00
ENAC    =  1.250E 00
ENAC    =  1.500E 00
ENAC    =  1.750E 00
ENAC    =  2.000E 00
ENAC    =  2.250E 00
ENAC    =  2.500E 00
```

Figure 52. Output Solution Data (Cont)

INPUT PARAMETER ** IL1 **	IL2	VBE7	VCB7	VBE8	VCB8	VOUT
NO. 1 -- ENAC						
-2.500E 00	0.	0.	0.	0.	0.	0.	0.
-2.250E 00	0.	0.	0.	0.	0.	0.	0.
-2.000E 00	0.	0.	0.	0.	0.	0.	0.
-1.750E 00	0.	0.	0.	0.	0.	0.	0.
-1.500E 00	0.	0.	0.	0.	0.	0.	0.
-1.250E 00	0.	0.	0.	0.	0.	0.	0.
-1.000E 00	0.	0.	0.	0.	0.	0.	0.
-7.500E-01	0.	0.	0.	0.	0.	0.	0.
-5.000E-01	-1.181E-04	1.556E-04	2.401E-02	8.402E-01	6.944E-02	1.032E 01	-2.324E 00
-2.500E-01	-5.903E-05	7.780E-05	1.947E-02	2.288E 00	8.479E-02	9.138E 00	-1.162E 00
-0.	0.	0.	1.493E-02	3.736E 00	1.001E-01	7.961E 00	-0.
2.500E-01	5.903E-05	-7.780E-05	1.040E-02	5.185E 00	1.155E-01	6.784E 00	1.162E 00
5.000E-01	1.181E-04	-1.546E-04	6.394E-03	6.462E 00	1.290E-01	5.745E 00	2.187E 00
7.500E-01	1.771E-04	-2.248E-04	6.079E-03	6.562E 00	1.301E-01	5.664E 00	2.267E 00
1.000E 00	0.	0.	0.	0.	0.	0.	0.
1.250E 00	0.	0.	0.	0.	0.	0.	0.
1.500E 00	0.	0.	0.	0.	0.	0.	0.
1.750E 00	0.	0.	0.	0.	0.	0.	0.
2.000E 00	0.	0.	0.	0.	0.	0.	0.
2.250E 00	0.	0.	0.	0.	0.	0.	0.
2.500E 00	0.	0.	0.	0.	0.	0.	0.

Figure 53. Output Solution Data (Cont)

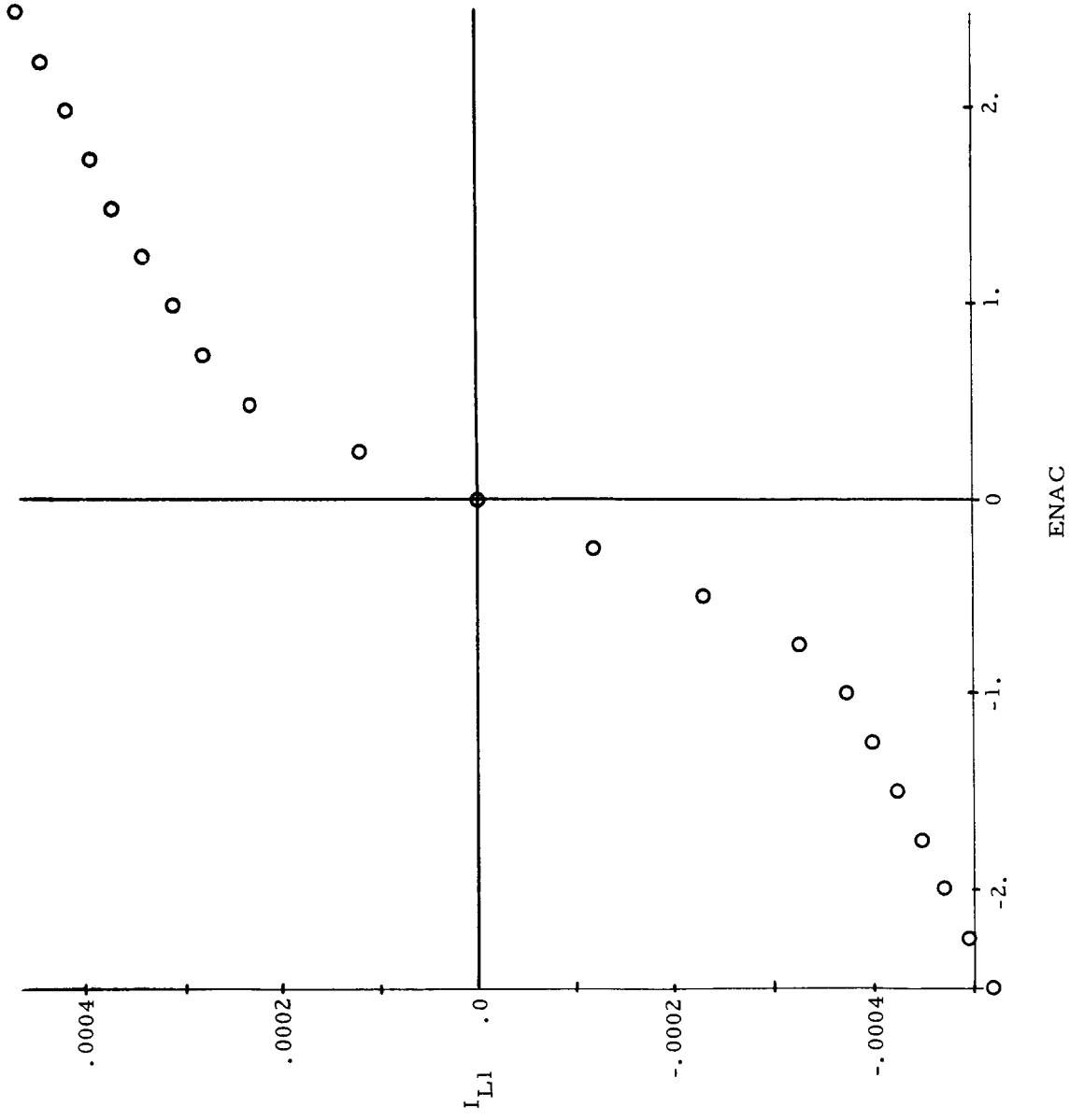

Figure 54. ENAC vs IL1 for Nominal IL1 (at -50 C)

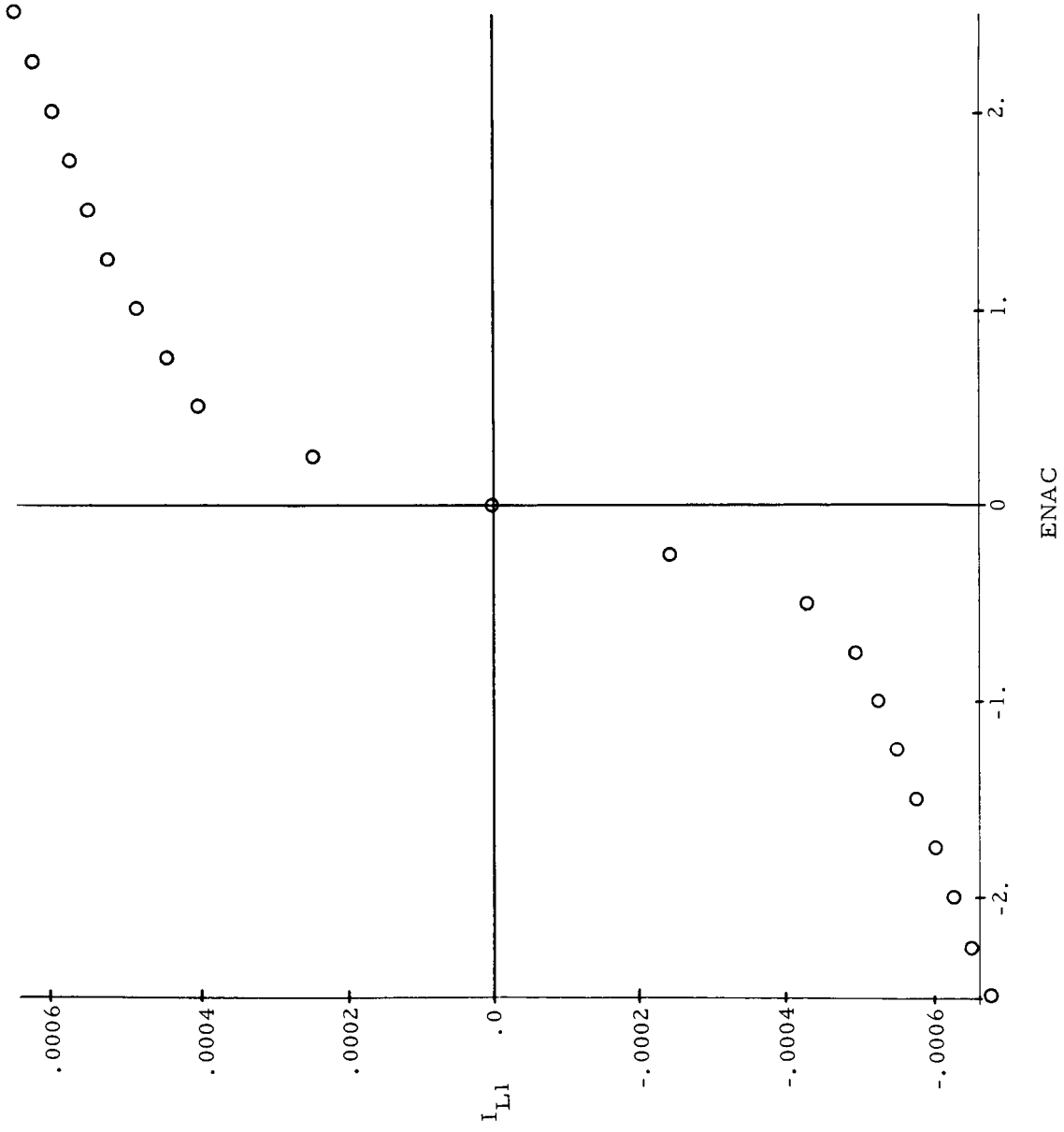

Figure 55. ENAC vs IL1 for Minimum IL1 (at -50 C)

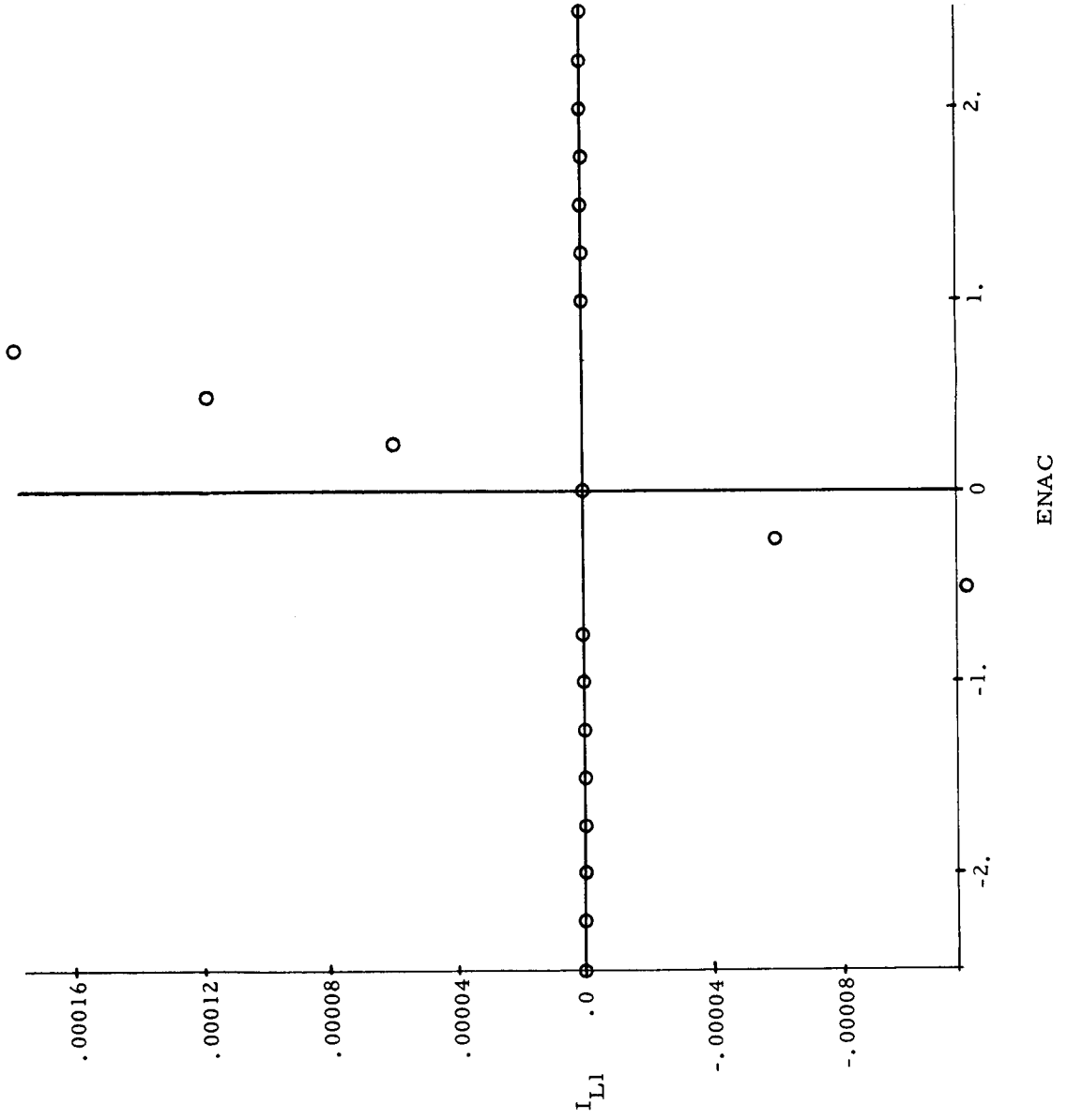

Figure 56. ENAC vs IL1 for Maximum IL1 (at -50 C)

VII. TEMPERATURE ANALYSIS

An analysis of the fluctuations in the output current as a function of temperature was conducted for the Log Compression Amplifier. The various phases of the analysis will be described first in this section, followed by the results and/or any pertinent information uncovered.

For ease of following the various phases and for continuity, the overall program has been broken down into seven phases. These are described below:

A. Phase One

The matrix equation of the circuit and the solutions at 25 C are presented first. This provides a basis for comparison with the other phases of the analysis.

B. Phase Two

In the second phase, the partial derivatives of all output variables with respect to each of the input parameters are calculated. This is the same procedure that is used in the MANDEX Worst-case analysis. Each input parameter is incremented, in one percent steps, ±4 percent about its mean value. At each step, the matrix equation is solved and the values of the output variables determined. These values are substituted into an eight-point central derivative formula which is then evaluated, yielding the desired partial derivatives.

C. Phase Three

It is possible to determine the derivative of any output variable with respect to temperature in several ways. In this phase of the analysis, the following formula was used:

$$\frac{d\,OV_x}{d\,T} = \sum_{i=1}^{n} \frac{\partial OV_x}{\partial Pi} \frac{\partial Pi}{\partial T}$$

where

Pi is input parameter i

n is the number of input parameters

OV_x is output variable x.

It should be noted that the first term after the summation sign is the partial derivative calculated in Phase 2. The second term after the summation sign, the partial of the input parameter with respect to temperature, is merely the temperature coefficient of the part multiplied by the mean value of the part. That is;

$$\frac{\partial Pi}{\partial T} = \theta i \, Pi.$$

Since the temperature coefficient and the nominal values of the parameter are input data, and the partial of the output variable with respect to the input parameter has been calculated in Phase 2, it is possible to evaluate the summation and determine the required derivative. In addition to this derivative it might be of interest to know which terms contributed the most in this summation. For this reason, the percentage contribution of the individual terms was calculated and printed out. The expression for this is:

$$\% \text{ contribution of } j^{\underline{th}} \text{ term} = \frac{\frac{\partial OV}{\partial P_j} \theta_j P_j}{\sum_{i=1}^{n} \frac{\partial OV}{\partial Pi} \theta i \, Pi}.$$

D. Phase Four

Since the overall analysis of this circuit is concerned directly with temperature effects, each input part parameter has been expressed as a function of its temperature coefficient and ambient temperature. The generalized form is:

$$\text{Parameter Value} = Po + \theta Po \, (T - 25°)$$

where

Po is the parameter value @ 25° C and

T = ambient temperature.

It is possible to calculate the derivative of the output current with respect to temperature directly by using the above relationship of temperature and parameter values, as has been done in this phase. The procedure is basically the same as that presented in Phase 2 except that the only parameter incremented here is temperature. At each increment of temperature, new input parameter values were determined and using these new values in the matrix equation, a new set of output variable values was determined. The temperature was incremented eight times and once again the eight-point central derivative formula was used, this time yielding the desired derivative directly.

E. Phase Five

The equation presented in Phase 3 is used in this phase also. In this section, the individual terms of the summation $\sum \frac{\partial OV}{\partial Pi} \theta i \, Pi$ are multiplied by the change in temperature to give the change in output variables that would result. Initially, temperature is set to -50 or a ΔT of -75 degrees and the following product is computed and printed out:

$$\Delta OV_x\Big|_i = \frac{\partial OV_x}{\partial Pi} \theta i \, Pi \, (T - 25) = \frac{\partial OV_x}{\partial Pi} \theta i \, Pi \, \Delta T$$

where

$\Delta OV_x\Big|_i$ equals the change in output variable, x, due to input parameter i.

After each term in the summation has been evaluated in the above manner, the individual increments of the output variable are summed to present the total expected change in the output variable. This same procedure is followed for each output variable of the circuit.

F. Phase Six

Since the parameter values have been specified as a function of temperature (see Phase 4), the value of temperature is set to -50 degrees and new parameter values calculated. These new values are substituted into the matrix equation which is then solved and the solutions, along with the matrix, printed out at this point.

G. Phase Seven

The total change in each output variable between 25 and -50 C is now computed. This value is arrived at by subtracting the value of the output variable obtained in Phase 1 from the value of the same output variable obtained in Phase 6. For a check on the linearity of the circuit with respect to temperature, this change may be compared with the change calculated in Phase 5.

Phases 5, 6, and 7 are then repeated for 0 and +50 degrees completing the analysis.

The thermal analysis was conducted on the first part of the log compression amplifier. The entire circuit could not be simulated on the computer because the number of parameters involved exceeded the maximum allowable limit for the program. Therefore, only that segment of the circuit which appears in Figure 5 was analyzed. The results of this analysis can be translated to the second stage of the circuit to determine the overall effect of temperature on the circuit.

The first part of the circuit was analyzed at the following temperatures: 25 C, 0 C, -50 C, and +50 C. The ac operation of the circuit was used during this analysis and the input voltage was set at 0.1 volts. This input signal set up the following conditions for the four diode-pair stages. The first and second stages off, third stage partially on, and the fourth stage fully on. There were 75 input parameters and 22 output variables in this analysis. A listing of the input parameters appears in Table 8. Parameters 26 and 27, RL1 and RL2, represent the output load impedance and have been set equal to 100 ohms. The DRF terms represent diode resistance and the DVF terms represent diode voltages (the diode voltages are equal to 0 in ac operation). All input parameters which have Q as the first letter are transistor parameters. Of the 22 output variables, 1 through 19 are the node voltages, 20 is IL1, the current through RL1, 21 is IL2, the current through RL2, and

Table 8. Input Parameters

Symbol	No.	Symbol	No.	Symbol	No.
RIN	1	RL1	26	QVBE03	51
R556	2	RL2	27	QVBE04	52
R557	3	DRF001	28	QVBE05	53
R559	4	DRF003	29	QVBE06	54
R561	5	DRF005	30	QVBE07	55
R562	6	DRF007	31	QVBE08	56
R563	7	EINAL	32	QH0E01	57
R564	8	DVF001	33	QH0E02	58
R566	9	DVF002	34	QH0E03	59
R567	10	DVF003	35	QH0E04	60
R568	11	DVF004	36	QH0E05	61
R569	12	DVF005	37	QH0E06	62
R572	13	DVF006	38	QH0E07	63
R573	14	DVF007	39	QH0E08	64
R574	15	DVF008	40	QHFE01	65
R577	16	QHIE01	41	QHFE02	66
R578	17	QHIE02	42	QHFE03	67
R579	18	QHIE03	43	QHFE04	68
R581	19	QHIE04	44	QHFE05	69
R582	20	QHIE05	45	QHFE06	70
R583	21	QHIE06	46	QHFE07	71
R584	22	QHIE07	47	QHFE08	72
R586	23	QHIE08	48	DRF006	73
R587	24	QVBE01	49	DRF008	74
R591	25	QVBE02	50	TEMP	75

22 is designated VOUT and represents the voltage input to the second half of the circuit. (VOUT is equivalent to node 17.)

Figures 57 and 58 present the nominal matrix or the matrix equation at 25 C and the solutions for all 22 output variables at these conditions. It should be noted that the two output variables of greatest interest, IL1 and IL2, are equal to 0.072 ma and -0.262 ma, respectively.

Phase 3 of the analysis was the computation of the partial derivative of all output variables with respect to temperature using the formula described under phase three (para. C). It should be noted that this formula is only an approximation of the true derivative. Unless the value of the partial derivative remains constant regardless of the variations of other input parameters, this formula is not exact. However, the evaluation of the derivatives in this manner is extremely beneficial because it presents a way to determine the sensitivity of the derivative with respect

NOMINAL MATRIX

0.52957E-02	-0.19569E-03	0.	0.	0.	0.
0.	0.	0.	0.	0.	0.
0.	0.	0.	0.	0.	-1.00000E-04
0.	-0.19569E-03	0.67277E-03	-0.33898E-03	0.	0.
0.	0.	0.	0.	0.	0.
0.	0.	0.	0.	0.	0.
0.	0.	0.	-0.98305E-02	0.10026E-01	0.
0.	0.	0.	0.	0.	0.
0.	0.	0.	0.	0.	0.
0.	0.	0.	0.	0.94915E-02	-0.94915E-02
0.37063E-03	-0.33898E-03	0.	0.	0.	0.
0.	0.	0.	0.	0.	0.
0.	0.	0.	0.	0.	0.
0.	-0.98305E-02	0.10236E-01	-0.19569E-03	0.	0.
0.	0.	0.	0.	0.	0.
0.	0.	0.	0.	-1.00000E-04	0.
0.	0.	0.	-0.19569E-03	0.67277E-03	-0.33898E-03
0.	0.	0.	0.	0.	0.
0.	0.	0.	0.	0.	0.
0.	0.	0.	0.	0.	-0.98305E-02
0.10026E-01	0.	0.	0.	0.	0.
0.	0.	0.	0.	0.	0.
0.	0.	0.	0.	0.	0.
0.94915E-02	-0.94915E-02	0.37063E-03	-0.33898E-03	0.	0.
0.	0.	0.	0.	0.	0.
0.	0.	0.	0.	0.	0.
0.	0.	0.	-0.98305E-02	0.10236E-01	-0.19569E-03
0.	0.	0.	0.	0.	0.
0.	-1.00000E-04	0.	0.	0.	0.
0.	0.	0.	0.	0.	-0.19569E-03
0.34583E-02	-0.33898E-03	0.	0.	0.	0.
0.	0.	0.	0.	0.	0.
0.	0.	0.	0.	0.	0.
0.	-0.98305E-02	0.10046E-01	0.	0.	0.
0.	0.	0.	0.	0.	0.
0.	0.	0.	0.	0.	0.
0.	0.	0.94915E-02	-0.94915E-02	0.37063E-03	-0.33898E-03
0.	0.	0.	0.	0.	0.
0.	0.	0.	0.	0.	0.
0.	0.	0.	0.	0.	-0.98305E-02

Figure 57. Matrix Equation and Solutions at 25 C

```
 0.10236E-01 -0.19569E-03  0.           0.           0.           0.
-1.00000E-04  0.           0.           0.           0.           0.
 0.           0.           0.           0.           0.           0.
 0.          -0.19569E-03  0.18155E-01 -0.33898E-03  0.           0.
 0.           0.           0.           0.           0.           0.
 0.           0.           0.           0.           0.           0.
 0.           0.           0.          -0.98305E-02  0.10046E-01  0.
 0.           0.           0.           0.           0.           0.
 0.           0.           0.           0.           0.           0.
 0.           0.           0.           0.           0.94915E-02 -0.94915E-02
 0.37063E-03 -0.33898E-03  0.           0.           0.           0.
 0.           0.           0.           0.           0.           0.
 0.           0.           0.           0.           0.           0.
 0.          -0.98305E-02  0.99405E-02  0.           0.          -1.00000E-04
 0.           0.           0.           0.           0.           0.
 0.          -1.00000E-04  0.           0.           0.           0.
 0.           0.           0.           0.           0.10200E-01  0.
 0.           0.           0.           0.          -1.00000E-04  0.
 0.           0.           0.           0.           0.           0.
-1.00000E-04  0.           0.           0.           0.           0.
 0.10200E-01  0.50000E-03  0.           0.           0.           0.
 0.           0.           0.           0.           0.15515E-02  0.
 0.           0.          -0.10804E-01  0.           0.           0.
 0.           0.
ACC   UNDERFLOW AT LOCATION 34476

NOMINAL SOLUTIONS FOR OUTPUT VARIABLES
 0.96604E-01  0.55536E-01  0.54452E-01 -0.25025E-00 -0.24326E-00 -0.13985E-00
-0.13712E-00  0.65230E 00  0.63676E 00  0.53610E 00  0.52459E 00 -0.25143E 01
-0.24270E 01 -0.63282E 00 -0.61925E 00  0.36403E 01  0.36000E 01  0.71899E-02
-0.26179E-01  0.71899E-04 -0.26179E-03  0.36000E 01
```

Figure 58. Matrix Equation and Solutions at 25 C (Cont)

to each input parameter. This will be clarified by referring to Figures 57 and 58.

Figures 59, 60, 61, and 62 show the computer print out for the computation made on IL1. The first number presented in Figure 59 is the derivative of IL1 with respect to temperature and is equal to 0.124 μA/°C. The remainder of the figures depict the values of the individual terms divided by the summation. It should be noted at this point that since some of the terms are positive and others negative, the arithmetic summation is considerably different from the absolute value summation and seemingly erroneous results occur. For example, it can be noted that input parameters 65, 66, 67, and 68 contribute 22 percent, 73 percent, 22 percent, and 65 percent, respectively, to the total value of the derivative. This is a total of 182 percent and seems to be in error. The results are valid, however, because of the negative terms which introduce a negative percentage which will reduce the summation of the percentages to exactly 100. Parameters 65 through 68 are the gains of the first four transistors and are by far the most influential factors on the output current variation.

The derivative of IL2, with respect to temperature, is shown in Figures 63, 64, 65, and 66 as -0.433 μA/°C which was expected since there is one amplification stage separating IL1 and IL2. The major factor in this derivative is parameter 70, the gain of transistor 6, which appears in the third stage. It can be noted from these figures that the value for this individual term is 104 percent of the total, which means that parameter 70 would tend to cause greater fluctuation in IL2 than is obtained, but the majority of the other parameters have the tendency to correct for this fluctuation.

Since it is recognized that the formula used is only an approximation, the derivative of the output variables, with respect to temperature, was determined directly using the eight-point central derivative formula. The values determined directly are 0.154 μA/°C for IL1 and -1.25 μA/°C for IL2. The close correlation (see Table 5) between IL1 terms indicates that there are very little higher order effects influencing this. For IL2, however, there is a factor of three difference between the two values which indicates that the higher order effects influencing IL2 cannot be neglected.

```
DERIVATIVE OF OUTPUT VARIABLE NO =  20=  0.123703E-06
PERCENT CONTRIBUTION OF INPUT PARAMETER =   1= -0.349780E-00
PERCENT CONTRIBUTION OF INPUT PARAMETER =   2= -0.123603E 01
PERCENT CONTRIBUTION OF INPUT PARAMETER =   3= -0.366289E 01
PERCENT CONTRIBUTION OF INPUT PARAMETER =   4=  0.264561E 01
PERCENT CONTRIBUTION OF INPUT PARAMETER =   5=  0.675963E 01
PERCENT CONTRIBUTION OF INPUT PARAMETER =   6= -0.843874E 01
PERCENT CONTRIBUTION OF INPUT PARAMETER =   7=  0.691662E 00
PERCENT CONTRIBUTION OF INPUT PARAMETER =   8=  0.861106E 00
PERCENT CONTRIBUTION OF INPUT PARAMETER =   9= -0.348899E 01
PERCENT CONTRIBUTION OF INPUT PARAMETER =  10=  0.286104E 01
PERCENT CONTRIBUTION OF INPUT PARAMETER =  11=  0.705800E 01
PERCENT CONTRIBUTION OF INPUT PARAMETER =  12= -0.849984E 01
PERCENT CONTRIBUTION OF INPUT PARAMETER =  13= -0.918837E 01
PERCENT CONTRIBUTION OF INPUT PARAMETER =  14=  0.902934E 00
PERCENT CONTRIBUTION OF INPUT PARAMETER =  15=  0.237238E-00
PERCENT CONTRIBUTION OF INPUT PARAMETER =  16=  0.456141E-01
PERCENT CONTRIBUTION OF INPUT PARAMETER =  17=  0.536222E-01
PERCENT CONTRIBUTION OF INPUT PARAMETER =  18= -0.687151E-01
PERCENT CONTRIBUTION OF INPUT PARAMETER =  19= -0.696904E-01
PERCENT CONTRIBUTION OF INPUT PARAMETER =  20=  0.677364E-02
```

Figure 59. Derivative of IL1 With Respect to Temperature

```
PERCENT CONTRIBUTION OF INPUT PARAMETER =  21=  0.881422E-02
PERCENT CONTRIBUTION OF INPUT PARAMETER =  22=  0.269757E-04
PERCENT CONTRIBUTION OF INPUT PARAMETER =  23=  0.
PERCENT CONTRIBUTION OF INPUT PARAMETER =  24= -0.243324E-05
PERCENT CONTRIBUTION OF INPUT PARAMETER =  25=  0.
PERCENT CONTRIBUTION OF INPUT PARAMETER =  26= -0.204342E-00
PERCENT CONTRIBUTION OF INPUT PARAMETER =  27=  0.826410E-01
PERCENT CONTRIBUTION OF INPUT PARAMETER =  28= -0.197532E 02
PERCENT CONTRIBUTION OF INPUT PARAMETER =  29= -0.213624E 02
PERCENT CONTRIBUTION OF INPUT PARAMETER =  30= -0.921707E 00
PERCENT CONTRIBUTION OF INPUT PARAMETER =  31= -0.864624E-04
PERCENT CONTRIBUTION OF INPUT PARAMETER =  32=  0.
PERCENT CONTRIBUTION OF INPUT PARAMETER =  33=  0.
PERCENT CONTRIBUTION OF INPUT PARAMETER =  34=  0.
PERCENT CONTRIBUTION OF INPUT PARAMETER =  35=  0.
PERCENT CONTRIBUTION OF INPUT PARAMETER =  36=  0.
PERCENT CONTRIBUTION OF INPUT PARAMETER =  37=  0.
PERCENT CONTRIBUTION OF INPUT PARAMETER =  38=  0.
PERCENT CONTRIBUTION OF INPUT PARAMETER =  39=  0.
PERCENT CONTRIBUTION OF INPUT PARAMETER =  40=  0.
PERCENT CONTRIBUTION OF INPUT PARAMETER =  41= -0.690363E 01
PERCENT CONTRIBUTION OF INPUT PARAMETER =  42= -0.774056E 01
```

Figure 60. Derivative of IL1 With Respect to Temperature (Cont)

```
PERCENT CONTRIBUTION OF INPUT PARAMETER =  43= -0.695486E 01
PERCENT CONTRIBUTION OF INPUT PARAMETER =  44= -0.689032E 01
PERCENT CONTRIBUTION OF INPUT PARAMETER =  45= -0.617935E-01
PERCENT CONTRIBUTION OF INPUT PARAMETER =  46= -0.752981E-01
PERCENT CONTRIBUTION OF INPUT PARAMETER =  47=  0.193066E-03
PERCENT CONTRIBUTION OF INPUT PARAMETER =  48=  0.
PERCENT CONTRIBUTION OF INPUT PARAMETER =  49= -0.
PERCENT CONTRIBUTION OF INPUT PARAMETER =  50= -0.
PERCENT CONTRIBUTION OF INPUT PARAMETER =  51= -0.
PERCENT CONTRIBUTION OF INPUT PARAMETER =  52= -0.
PERCENT CONTRIBUTION OF INPUT PARAMETER =  53= -0.
PERCENT CONTRIBUTION OF INPUT PARAMETER =  54= -0.
PERCENT CONTRIBUTION OF INPUT PARAMETER =  55= -0.
PERCENT CONTRIBUTION OF INPUT PARAMETER =  56= -0.
PERCENT CONTRIBUTION OF INPUT PARAMETER =  57=  0.
PERCENT CONTRIBUTION OF INPUT PARAMETER =  58=  0.
PERCENT CONTRIBUTION OF INPUT PARAMETER =  59=  0.
PERCENT CONTRIBUTION OF INPUT PARAMETER =  60=  0.
PERCENT CONTRIBUTION OF INPUT PARAMETER =  61=  0.
PERCENT CONTRIBUTION OF INPUT PARAMETER =  62=  0.
PERCENT CONTRIBUTION OF INPUT PARAMETER =  63=  0.
PERCENT CONTRIBUTION OF INPUT PARAMETER =  64=  0.
```

Figure 61. Derivative of IL1 With Respect to Temperature (Cont)

```
PERCENT CONTRIBUTION OF INPUT PARAMETER =  65=  0.218035E 02
PERCENT CONTRIBUTION OF INPUT PARAMETER =  66=  0.734338E 02
PERCENT CONTRIBUTION OF INPUT PARAMETER =  67=  0.224079E 02
PERCENT CONTRIBUTION OF INPUT PARAMETER =  68=  0.653795E 02
PERCENT CONTRIBUTION OF INPUT PARAMETER =  69=  0.247797E-00
PERCENT CONTRIBUTION OF INPUT PARAMETER =  70=  0.723455E 00
PERCENT CONTRIBUTION OF INPUT PARAMETER =  71= -0.245691E-03
PERCENT CONTRIBUTION OF INPUT PARAMETER =  72=  0.
PERCENT CONTRIBUTION OF INPUT PARAMETER =  73= -0.340406E-00
PERCENT CONTRIBUTION OF INPUT PARAMETER =  74=  0.100338E-02
```

Figure 62. Derivative of IL1 With Respect to Temperature (Cont)

```
PARTIAL DERIVATIVE OF OUTPUT VARIABLE NO =  21= -0.433165E-06
     PERCENT CONTRIBUTION OF INPUT PARAMETER =   1= -0.602706E-01
     PERCENT CONTRIBUTION OF INPUT PARAMETER =   2=  0.313435E-01
     PERCENT CONTRIBUTION OF INPUT PARAMETER =   3= -0.743215E 00
     PERCENT CONTRIBUTION OF INPUT PARAMETER =   4=  0.533295E 00
     PERCENT CONTRIBUTION OF INPUT PARAMETER =   5=  0.136764E 01
     PERCENT CONTRIBUTION OF INPUT PARAMETER =   6= -0.170749E 01
     PERCENT CONTRIBUTION OF INPUT PARAMETER =   7= -0.843482E 00
     PERCENT CONTRIBUTION OF INPUT PARAMETER =   8=  0.174227E-00
     PERCENT CONTRIBUTION OF INPUT PARAMETER =   9= -0.237438E-00
     PERCENT CONTRIBUTION OF INPUT PARAMETER =  10=  0.255084E-00
     PERCENT CONTRIBUTION OF INPUT PARAMETER =  11=  0.549962E 00
     PERCENT CONTRIBUTION OF INPUT PARAMETER =  12= -0.660198E 00
     PERCENT CONTRIBUTION OF INPUT PARAMETER =  13=  0.603960E-01
     PERCENT CONTRIBUTION OF INPUT PARAMETER =  14=  0.703554E-01
     PERCENT CONTRIBUTION OF INPUT PARAMETER =  15= -0.105652E-00
     PERCENT CONTRIBUTION OF INPUT PARAMETER =  16=  0.341354E-00
     PERCENT CONTRIBUTION OF INPUT PARAMETER =  17=  0.770302E 01
     PERCENT CONTRIBUTION OF INPUT PARAMETER =  18= -0.103170E 02
     PERCENT CONTRIBUTION OF INPUT PARAMETER =  19= -0.100155E 02
     PERCENT CONTRIBUTION OF INPUT PARAMETER =  20=  0.974452E 00
```

Figure 63. Derivative of IL2 With Respect to Temperature

```
PERCENT CONTRIBUTION OF INPUT PARAMETER =  21=  0.126760E 01
PERCENT CONTRIBUTION OF INPUT PARAMETER =  22=  0.260722E-02
PERCENT CONTRIBUTION OF INPUT PARAMETER =  23=  0.
PERCENT CONTRIBUTION OF INPUT PARAMETER =  24=  0.173531E-03
PERCENT CONTRIBUTION OF INPUT PARAMETER =  25=  0.
PERCENT CONTRIBUTION OF INPUT PARAMETER =  26=  0.318411E-02
PERCENT CONTRIBUTION OF INPUT PARAMETER =  27= -0.210935E-00
PERCENT CONTRIBUTION OF INPUT PARAMETER =  28= -0.398138E 01
PERCENT CONTRIBUTION OF INPUT PARAMETER =  29= -0.190492E 01
PERCENT CONTRIBUTION OF INPUT PARAMETER =  30= -0.689631E 01
PERCENT CONTRIBUTION OF INPUT PARAMETER =  31= -0.170836E-01
PERCENT CONTRIBUTION OF INPUT PARAMETER =  32=  0.
PERCENT CONTRIBUTION OF INPUT PARAMETER =  33=  0.
PERCENT CONTRIBUTION OF INPUT PARAMETER =  34=  0.
PERCENT CONTRIBUTION OF INPUT PARAMETER =  35=  0.
PERCENT CONTRIBUTION OF INPUT PARAMETER =  36=  0.
PERCENT CONTRIBUTION OF INPUT PARAMETER =  37=  0.
PERCENT CONTRIBUTION OF INPUT PARAMETER =  38=  0.
PERCENT CONTRIBUTION OF INPUT PARAMETER =  39=  0.
PERCENT CONTRIBUTION OF INPUT PARAMETER =  40=  0.
PERCENT CONTRIBUTION OF INPUT PARAMETER =  41= -0.139626E 01
PERCENT CONTRIBUTION OF INPUT PARAMETER =  42= -0.156671E 01
```

Figure 64. Derivative of IL2 With Respect to Temperature (Cont)

```
PERCENT CONTRIBUTION OF INPUT PARAMETER =  43= -0.540817E 00
PERCENT CONTRIBUTION OF INPUT PARAMETER =  44= -0.536882E 00
PERCENT CONTRIBUTION OF INPUT PARAMETER =  45= -0.928818E 01
PERCENT CONTRIBUTION OF INPUT PARAMETER =  46= -0.109605E 02
PERCENT CONTRIBUTION OF INPUT PARAMETER =  47= -0.363691E-02
PERCENT CONTRIBUTION OF INPUT PARAMETER =  48=  0.
PERCENT CONTRIBUTION OF INPUT PARAMETER =  49= -0.
PERCENT CONTRIBUTION OF INPUT PARAMETER =  50= -0.
PERCENT CONTRIBUTION OF INPUT PARAMETER =  51= -0.
PERCENT CONTRIBUTION OF INPUT PARAMETER =  52= -0.
PERCENT CONTRIBUTION OF INPUT PARAMETER =  53= -0.
PERCENT CONTRIBUTION OF INPUT PARAMETER =  54= -0.
PERCENT CONTRIBUTION OF INPUT PARAMETER =  55= -0.
PERCENT CONTRIBUTION OF INPUT PARAMETER =  56= -0.
PERCENT CONTRIBUTION OF INPUT PARAMETER =  57=  0.
PERCENT CONTRIBUTION OF INPUT PARAMETER =  58=  0.
PERCENT CONTRIBUTION OF INPUT PARAMETER =  59=  0.
PERCENT CONTRIBUTION OF INPUT PARAMETER =  60=  0.
PERCENT CONTRIBUTION OF INPUT PARAMETER =  61=  0.
PERCENT CONTRIBUTION OF INPUT PARAMETER =  62=  0.
PERCENT CONTRIBUTION OF INPUT PARAMETER =  63=  0.
PERCENT CONTRIBUTION OF INPUT PARAMETER =  64=  0.
```

Figure 65. Derivative of IL2 With Respect to Temperature (Cont)

```
PERCENT CONTRIBUTION OF INPUT PARAMETER =  65=  0.440729E 01
PERCENT CONTRIBUTION OF INPUT PARAMETER =  66=  0.148570E 02
PERCENT CONTRIBUTION OF INPUT PARAMETER =  67=  0.181608E 01
PERCENT CONTRIBUTION OF INPUT PARAMETER =  68=  0.509386E 01
PERCENT CONTRIBUTION OF INPUT PARAMETER =  69=  0.208723E 02
PERCENT CONTRIBUTION OF INPUT PARAMETER =  70=  0.104033E 03
PERCENT CONTRIBUTION OF INPUT PARAMETER =  71=  0.601486E-02
PERCENT CONTRIBUTION OF INPUT PARAMETER =  72=  0.
PERCENT CONTRIBUTION OF INPUT PARAMETER =  73= -0.254935E 01
PERCENT CONTRIBUTION OF INPUT PARAMETER =  74=  0.122576E-00
```

Figure 66. Derivative of IL2 With Respect to Temperature (Cont)

Table 9. Comparison of Phase 3 and Phase 4 Results ($\frac{dIL}{dT}$)

	Phase 3 - Approx Formula	Phase 4 - Direct Calculation
$\frac{dIL1}{dT}$	.124 μ A/°C	.154 μ A/°C
$\frac{dIL2}{dT}$	-.433 μ A/°C	-1.25 μ A/°C

Temperature = -50 C

With all the necessary calculations required for a comparison of temperature effects calculated at 25 C, the first temperature setting evaluated was -50C. The first step in the analysis was to use the equation described in Phase 5. Figures 67 and 68 present the effects of each input parameter's fluctuations due to temperature on IL1. The last line in Figure 68 is the summation of all the individual effects and is equal to -9.28 u ma. Glancing down the column of numbers, it is readily seen that parameters 65 through 68 cause the greatest change. This was predicted previously. The many zeros appearing in the column of numbers are due to the fact that those parameters do not appear in the matrix equation for this circuit under the given operating conditions. Figures 69 and 70 present the same information for IL2. However, the total change predicted for this current is 0.032 ma. As pointed out before parameter #70, the gain of the sixth transistor tries to induce a change of 0.034 ma (which is greater than the total change).

Since it has been demonstrated that higher order effects influence the value of IL2, it was necessary to calculate the change in output current from 25 C to -50 C directly. This was done and is explained in Phase 6. Figures 71 and 72 present the matrix and the output variable solutions at -50C. Phase 7 is presented in Figure 73 which is merely the difference between the output variables at 25 C and -50 C. For IL1, this difference turns out to be -0.020 ma and 0.105 ma for IL2. Table 10 presents the comparison of the two methods of calculating the change. It can be seen that at lower temperatures, the non-linear effects start to have a greater influence on IL2 than previously. In addition, Table 10 presents the predicted change of IL1 and IL2 as calculated by taking the derivative (calculated in Phase 4) and multiplying it by the change in temperature. It can be noticed that the correlation between these numbers and those predicted in Phase 7 is very high.

```
THIS SET OF CALCULATIONS PERFORMED AT TEMPERATURE =-50.00

PARAMETER NO  1 CAUSES A CHANGE IN OUTPUT VARIABLE NO 20 =  0.324516E-07
PARAMETER NO  2 CAUSES A CHANGE IN OUTPUT VARIABLE NO 20 =  0.114676E-06
PARAMETER NO  3 CAUSES A CHANGE IN OUTPUT VARIABLE NO 20 =  0.339833E-06
PARAMETER NO  4 CAUSES A CHANGE IN OUTPUT VARIABLE NO 20 = -0.245453E-06
PARAMETER NO  5 CAUSES A CHANGE IN OUTPUT VARIABLE NO 20 = -0.627140E-06
PARAMETER NO  6 CAUSES A CHANGE IN OUTPUT VARIABLE NO 20 =  0.782923E-06
PARAMETER NO  7 CAUSES A CHANGE IN OUTPUT VARIABLE NO 20 = -0.641705E-07
PARAMETER NO  8 CAUSES A CHANGE IN OUTPUT VARIABLE NO 20 = -0.798911E-07
PARAMETER NO  9 CAUSES A CHANGE IN OUTPUT VARIABLE NO 20 =  0.323699E-06
PARAMETER NO 10 CAUSES A CHANGE IN OUTPUT VARIABLE NO 20 = -0.265440E-06
PARAMETER NO 11 CAUSES A CHANGE IN OUTPUT VARIABLE NO 20 = -0.654822E-06
PARAMETER NO 12 CAUSES A CHANGE IN OUTPUT VARIABLE NO 20 =  0.788592E-06
PARAMETER NO 13 CAUSES A CHANGE IN OUTPUT VARIABLE NO 20 =  0.852472E-06
PARAMETER NO 14 CAUSES A CHANGE IN OUTPUT VARIABLE NO 20 = -0.837717E-07
PARAMETER NO 15 CAUSES A CHANGE IN OUTPUT VARIABLE NO 20 = -0.220102E-07
PARAMETER NO 16 CAUSES A CHANGE IN OUTPUT VARIABLE NO 20 = -0.423195E-08
PARAMETER NO 17 CAUSES A CHANGE IN OUTPUT VARIABLE NO 20 = -0.497492E-08
PARAMETER NO 18 CAUSES A CHANGE IN OUTPUT VARIABLE NO 20 =  0.637520E-08
PARAMETER NO 19 CAUSES A CHANGE IN OUTPUT VARIABLE NO 20 =  0.646568E-08
PARAMETER NO 20 CAUSES A CHANGE IN OUTPUT VARIABLE NO 20 = -0.628440E-09
PARAMETER NO 21 CAUSES A CHANGE IN OUTPUT VARIABLE NO 20 = -0.817759E-09
PARAMETER NO 22 CAUSES A CHANGE IN OUTPUT VARIABLE NO 20 = -0.250273E-11
PARAMETER NO 23 CAUSES A CHANGE IN OUTPUT VARIABLE NO 20 = -0.
PARAMETER NO 24 CAUSES A CHANGE IN OUTPUT VARIABLE NO 20 =  0.225750E-12
PARAMETER NO 25 CAUSES A CHANGE IN OUTPUT VARIABLE NO 20 = -0.
PARAMETER NO 26 CAUSES A CHANGE IN OUTPUT VARIABLE NO 20 =  0.189583E-07
PARAMETER NO 27 CAUSES A CHANGE IN OUTPUT VARIABLE NO 20 = -0.766721E-08
PARAMETER NO 28 CAUSES A CHANGE IN OUTPUT VARIABLE NO 20 =  0.183265E-05
PARAMETER NO 29 CAUSES A CHANGE IN OUTPUT VARIABLE NO 20 =  0.198194E-05
PARAMETER NO 30 CAUSES A CHANGE IN OUTPUT VARIABLE NO 20 =  0.855134E-07
PARAMETER NO 31 CAUSES A CHANGE IN OUTPUT VARIABLE NO 20 =  0.802174E-11
PARAMETER NO 32 CAUSES A CHANGE IN OUTPUT VARIABLE NO 20 = -0.
PARAMETER NO 33 CAUSES A CHANGE IN OUTPUT VARIABLE NO 20 = -0.
PARAMETER NO 34 CAUSES A CHANGE IN OUTPUT VARIABLE NO 20 = -0.
PARAMETER NO 35 CAUSES A CHANGE IN OUTPUT VARIABLE NO 20 = -0.
PARAMETER NO 36 CAUSES A CHANGE IN OUTPUT VARIABLE NO 20 = -0.
PARAMETER NO 37 CAUSES A CHANGE IN OUTPUT VARIABLE NO 20 = -0.
PARAMETER NO 38 CAUSES A CHANGE IN OUTPUT VARIABLE NO 20 = -0.
PARAMETER NO 39 CAUSES A CHANGE IN OUTPUT VARIABLE NO 20 = -0.
PARAMETER NO 40 CAUSES A CHANGE IN OUTPUT VARIABLE NO 20 = -0.
```

Figure 67. Change in IL1 Due to Individual Input Parameters (at -50 C)

```
PARAMETER NO 41 CAUSES A CHANGE IN OUTPUT VARIABLE NO 20 =  0.640500E-06
PARAMETER NO 42 CAUSES A CHANGE IN OUTPUT VARIABLE NO 20 =  0.718148E-06
PARAMETER NO 43 CAUSES A CHANGE IN OUTPUT VARIABLE NO 20 =  0.645252E-06
PARAMETER NO 44 CAUSES A CHANGE IN OUTPUT VARIABLE NO 20 =  0.639265E-06
PARAMETER NO 45 CAUSES A CHANGE IN OUTPUT VARIABLE NO 20 =  0.573303E-08
PARAMETER NO 46 CAUSES A CHANGE IN OUTPUT VARIABLE NO 20 =  0.698595E-08
PARAMETER NO 47 CAUSES A CHANGE IN OUTPUT VARIABLE NO 20 = -0.179122E-10
PARAMETER NO 48 CAUSES A CHANGE IN OUTPUT VARIABLE NO 20 = -0.
PARAMETER NO 49 CAUSES A CHANGE IN OUTPUT VARIABLE NO 20 =  0.
PARAMETER NO 50 CAUSES A CHANGE IN OUTPUT VARIABLE NO 20 =  0.
PARAMETER NO 51 CAUSES A CHANGE IN OUTPUT VARIABLE NO 20 =  0.
PARAMETER NO 52 CAUSES A CHANGE IN OUTPUT VARIABLE NO 20 =  0.
PARAMETER NO 53 CAUSES A CHANGE IN OUTPUT VARIABLE NO 20 =  0.
PARAMETER NO 54 CAUSES A CHANGE IN OUTPUT VARIABLE NO 20 =  0.
PARAMETER NO 55 CAUSES A CHANGE IN OUTPUT VARIABLE NO 20 =  0.
PARAMETER NO 56 CAUSES A CHANGE IN OUTPUT VARIABLE NO 20 =  0.
PARAMETER NO 57 CAUSES A CHANGE IN OUTPUT VARIABLE NO 20 = -0.
PARAMETER NO 58 CAUSES A CHANGE IN OUTPUT VARIABLE NO 20 = -0.
PARAMETER NO 59 CAUSES A CHANGE IN OUTPUT VARIABLE NO 20 = -0.
PARAMETER NO 60 CAUSES A CHANGE IN OUTPUT VARIABLE NO 20 = -0.
PARAMETER NO 61 CAUSES A CHANGE IN OUTPUT VARIABLE NO 20 = -0.
PARAMETER NO 62 CAUSES A CHANGE IN OUTPUT VARIABLE NO 20 = -0.
PARAMETER NO 63 CAUSES A CHANGE IN OUTPUT VARIABLE NO 20 = -0.
PARAMETER NO 64 CAUSES A CHANGE IN OUTPUT VARIABLE NO 20 = -0.
PARAMETER NO 65 CAUSES A CHANGE IN OUTPUT VARIABLE NO 20 = -0.202287E-05
PARAMETER NO 66 CAUSES A CHANGE IN OUTPUT VARIABLE NO 20 = -0.681298E-05
PARAMETER NO 67 CAUSES A CHANGE IN OUTPUT VARIABLE NO 20 = -0.207895E-05
PARAMETER NO 68 CAUSES A CHANGE IN OUTPUT VARIABLE NO 20 = -0.606573E-05
PARAMETER NO 69 CAUSES A CHANGE IN OUTPUT VARIABLE NO 20 = -0.229900E-07
PARAMETER NO 70 CAUSES A CHANGE IN OUTPUT VARIABLE NO 20 = -0.671201E-07
PARAMETER NO 71 CAUSES A CHANGE IN OUTPUT VARIABLE NO 20 =  0.227945E-10
PARAMETER NO 72 CAUSES A CHANGE IN OUTPUT VARIABLE NO 20 = -0.
PARAMETER NO 73 CAUSES A CHANGE IN OUTPUT VARIABLE NO 20 =  0.315820E-07
PARAMETER NO 74 CAUSES A CHANGE IN OUTPUT VARIABLE NO 20 = -0.930908E-10

TOTAL CHANGE IN OUTPUT VARIABLE NO 20= -0.927772E-05
```

Figure 68. Change in IL1 Due to Individual Input Parameters (at -50 C) (Cont)

THIS SET OF CALCULATIONS PERFORMED AT TEMPERATURE =-50.00

```
PARAMETER NO  1 CAUSES A CHANGE IN OUTPUT VARIABLE NO 21 = -0.195804E-07
PARAMETER NO  2 CAUSES A CHANGE IN OUTPUT VARIABLE NO 21 =  0.101827E-07
PARAMETER NO  3 CAUSES A CHANGE IN OUTPUT VARIABLE NO 21 = -0.241451E-06
PARAMETER NO  4 CAUSES A CHANGE IN OUTPUT VARIABLE NO 21 =  0.173254E-06
PARAMETER NO  5 CAUSES A CHANGE IN OUTPUT VARIABLE NO 21 =  0.444310E-06
PARAMETER NO  6 CAUSES A CHANGE IN OUTPUT VARIABLE NO 21 = -0.554719E-06
PARAMETER NO  7 CAUSES A CHANGE IN OUTPUT VARIABLE NO 21 = -0.274025E-06
PARAMETER NO  8 CAUSES A CHANGE IN OUTPUT VARIABLE NO 21 =  0.566018E-07
PARAMETER NO  9 CAUSES A CHANGE IN OUTPUT VARIABLE NO 21 = -0.771374E-07
PARAMETER NO 10 CAUSES A CHANGE IN OUTPUT VARIABLE NO 21 =  0.828700E-07
PARAMETER NO 11 CAUSES A CHANGE IN OUTPUT VARIABLE NO 21 =  0.178668E-06
PARAMETER NO 12 CAUSES A CHANGE IN OUTPUT VARIABLE NO 21 = -0.214481E-06
PARAMETER NO 13 CAUSES A CHANGE IN OUTPUT VARIABLE NO 21 =  0.196211E-07
PARAMETER NO 14 CAUSES A CHANGE IN OUTPUT VARIABLE NO 21 =  0.228566E-07
PARAMETER NO 15 CAUSES A CHANGE IN OUTPUT VARIABLE NO 21 = -0.343237E-07
PARAMETER NO 16 CAUSES A CHANGE IN OUTPUT VARIABLE NO 21 =  0.110897E-06
PARAMETER NO 17 CAUSES A CHANGE IN OUTPUT VARIABLE NO 21 =  0.250251E-05
PARAMETER NO 18 CAUSES A CHANGE IN OUTPUT VARIABLE NO 21 = -0.335174E-05
PARAMETER NO 19 CAUSES A CHANGE IN OUTPUT VARIABLE NO 21 = -0.325376E-05
PARAMETER NO 20 CAUSES A CHANGE IN OUTPUT VARIABLE NO 21 =  0.316574E-06
PARAMETER NO 21 CAUSES A CHANGE IN OUTPUT VARIABLE NO 21 =  0.411810E-06
PARAMETER NO 22 CAUSES A CHANGE IN OUTPUT VARIABLE NO 21 =  0.847019E-09
PARAMETER NO 23 CAUSES A CHANGE IN OUTPUT VARIABLE NO 21 =  0.
PARAMETER NO 24 CAUSES A CHANGE IN OUTPUT VARIABLE NO 21 =  0.563757E-10
PARAMETER NO 25 CAUSES A CHANGE IN OUTPUT VARIABLE NO 21 =  0.
PARAMETER NO 26 CAUSES A CHANGE IN OUTPUT VARIABLE NO 21 =  0.103443E-08
PARAMETER NO 27 CAUSES A CHANGE IN OUTPUT VARIABLE NO 21 = -0.685273E-07
PARAMETER NO 28 CAUSES A CHANGE IN OUTPUT VARIABLE NO 21 = -0.129345E-05
PARAMETER NO 29 CAUSES A CHANGE IN OUTPUT VARIABLE NO 21 = -0.618859E-06
PARAMETER NO 30 CAUSES A CHANGE IN OUTPUT VARIABLE NO 21 = -0.224043E-05
PARAMETER NO 31 CAUSES A CHANGE IN OUTPUT VARIABLE NO 21 = -0.555003E-08
PARAMETER NO 32 CAUSES A CHANGE IN OUTPUT VARIABLE NO 21 =  0.
PARAMETER NO 33 CAUSES A CHANGE IN OUTPUT VARIABLE NO 21 =  0.
PARAMETER NO 34 CAUSES A CHANGE IN OUTPUT VARIABLE NO 21 =  0.
PARAMETER NO 35 CAUSES A CHANGE IN OUTPUT VARIABLE NO 21 =  0.
PARAMETER NO 36 CAUSES A CHANGE IN OUTPUT VARIABLE NO 21 =  0.
PARAMETER NO 37 CAUSES A CHANGE IN OUTPUT VARIABLE NO 21 =  0.
PARAMETER NO 38 CAUSES A CHANGE IN OUTPUT VARIABLE NO 21 =  0.
PARAMETER NO 39 CAUSES A CHANGE IN OUTPUT VARIABLE NO 21 =  0.
PARAMETER NO 40 CAUSES A CHANGE IN OUTPUT VARIABLE NO 21 =  0.
```

Figure 69. Change in IL2 Due to Individual Input Parameters (at -50 C)

```
PARAMETER NO 41 CAUSES A CHANGE IN OUTPUT VARIABLE NO 21 = -0.453607E-06
PARAMETER NO 42 CAUSES A CHANGE IN OUTPUT VARIABLE NO 21 = -0.508984E-06
PARAMETER NO 43 CAUSES A CHANGE IN OUTPUT VARIABLE NO 21 = -0.175697E-06
PARAMETER NO 44 CAUSES A CHANGE IN OUTPUT VARIABLE NO 21 = -0.174419E-06
PARAMETER NO 45 CAUSES A CHANGE IN OUTPUT VARIABLE NO 21 = -0.301749E-05
PARAMETER NO 46 CAUSES A CHANGE IN OUTPUT VARIABLE NO 21 = -0.356079E-05
PARAMETER NO 47 CAUSES A CHANGE IN OUTPUT VARIABLE NO 21 = -0.118154E-08
PARAMETER NO 48 CAUSES A CHANGE IN OUTPUT VARIABLE NO 21 =  0.
PARAMETER NO 49 CAUSES A CHANGE IN OUTPUT VARIABLE NO 21 = -0.
PARAMETER NO 50 CAUSES A CHANGE IN OUTPUT VARIABLE NO 21 = -0.
PARAMETER NO 51 CAUSES A CHANGE IN OUTPUT VARIABLE NO 21 = -0.
PARAMETER NO 52 CAUSES A CHANGE IN OUTPUT VARIABLE NO 21 = -0.
PARAMETER NO 53 CAUSES A CHANGE IN OUTPUT VARIABLE NO 21 = -0.
PARAMETER NO 54 CAUSES A CHANGE IN OUTPUT VARIABLE NO 21 = -0.
PARAMETER NO 55 CAUSES A CHANGE IN OUTPUT VARIABLE NO 21 = -0.
PARAMETER NO 56 CAUSES A CHANGE IN OUTPUT VARIABLE NO 21 = -0.
PARAMETER NO 57 CAUSES A CHANGE IN OUTPUT VARIABLE NO 21 =  0.
PARAMETER NO 58 CAUSES A CHANGE IN OUTPUT VARIABLE NO 21 =  0.
PARAMETER NO 59 CAUSES A CHANGE IN OUTPUT VARIABLE NO 21 =  0.
PARAMETER NO 60 CAUSES A CHANGE IN OUTPUT VARIABLE NO 21 =  0.
PARAMETER NO 61 CAUSES A CHANGE IN OUTPUT VARIABLE NO 21 =  0.
PARAMETER NO 62 CAUSES A CHANGE IN OUTPUT VARIABLE NO 21 =  0.
PARAMETER NO 63 CAUSES A CHANGE IN OUTPUT VARIABLE NO 21 =  0.
PARAMETER NO 64 CAUSES A CHANGE IN OUTPUT VARIABLE NO 21 =  0.
PARAMETER NO 65 CAUSES A CHANGE IN OUTPUT VARIABLE NO 21 =  0.143181E-05
PARAMETER NO 66 CAUSES A CHANGE IN OUTPUT VARIABLE NO 21 =  0.482667E-05
PARAMETER NO 67 CAUSES A CHANGE IN OUTPUT VARIABLE NO 21 =  0.589999E-06
PARAMETER NO 68 CAUSES A CHANGE IN OUTPUT VARIABLE NO 21 =  0.165486E-05
PARAMETER NO 69 CAUSES A CHANGE IN OUTPUT VARIABLE NO 21 =  0.678087E-05
PARAMETER NO 70 CAUSES A CHANGE IN OUTPUT VARIABLE NO 21 =  0.337977E-04
PARAMETER NO 71 CAUSES A CHANGE IN OUTPUT VARIABLE NO 21 =  0.195407E-08
PARAMETER NO 72 CAUSES A CHANGE IN OUTPUT VARIABLE NO 21 =  0.
PARAMETER NO 73 CAUSES A CHANGE IN OUTPUT VARIABLE NO 21 = -0.828217E-06
PARAMETER NO 74 CAUSES A CHANGE IN OUTPUT VARIABLE NO 21 =  0.398219E-07

TOTAL CHANGE IN OUTPUT VARIABLE NO 21=  0.324874E-04
```

Figure 70. Change in IL2 Due to Individual Input Parameters (at -50 C) (Cont)

SOLUTIONS OF OUTPUT VARIABLES AT TEMPERATURE =-50.00 DEGREES

NOMINAL MATRIX

0.53763E-02	-0.19867E-03	0.	0.	0.	0.
0.	0.	0.	0.	0.	0.
0.	0.	0.	0.	0.	-0.10152E-03
0.	-0.19867E-03	0.12101E-02	-0.88048E-03	0.	0.
0.	0.	0.	0.	0.	0.
0.	0.	0.	0.	0.	0.
0.	0.	0.	-0.12813E-01	0.13011E-01	0.
0.	0.	0.	0.	0.	0.
0.	0.	0.	0.	0.	0.
0.	0.	0.	0.	0.11932E-01	-0.11932E-01
0.91260E-03	-0.88048E-03	0.	0.	0.	0.
0.	0.	0.	0.	0.	0.
0.	0.	0.	0.	0.	0.
0.	-0.12813E-01	0.13225E-01	-0.19867E-03	0.	0.
0.	0.	0.	0.	0.	0.
0.	0.	0.	0.	-0.10152E-03	0.
0.	0.	0.	-0.19867E-03	0.12101E-02	-0.88048E-03
0.	0.	0.	0.	0.	0.
0.	0.	0.	0.	0.	0.
0.	0.	0.	0.	0.	-0.12813E-01
0.13011E-01	0.	0.	0.	0.	0.
0.	0.	0.	0.	0.	0.
0.	0.	0.	0.	0.	0.
0.11932E-01	-0.11932E-01	0.91260E-03	-0.88048E-03	0.	0.
0.	0.	0.	0.	0.	0.
0.	0.	0.	0.	0.	0.
0.	0.	0.	-0.12813E-01	0.13225E-01	-0.19867E-03
0.	0.	0.	0.	0.	0.
0.	-0.10152E-03	0.	0.	0.	0.
0.	0.	0.	0.	0.	-0.19867E-03
0.50735E-02	-0.88048E-03	0.	0.	0.	0.
0.	0.	0.	0.	0.	0.
0.	0.	0.	0.	0.	0.
0.	-0.12813E-01	0.13031E-01	0.	0.	0.
0.	0.	0.	0.	0.	0.
0.	0.	0.	0.	0.	0.
0.	0.	0.11932E-01	-0.11932E-01	0.91260E-03	-0.88048E-03
0.	0.	0.	0.	0.	0.
0.	0.	0.	0.	0.	0.
0.	0.	0.	0.	0.	-0.12813E-01

Figure 71. Matrix Equations and Solutions (at -50 C)

0.13225E-01	-0.19867E-03	0.	0.	0.	0.
-0.10152E-03	0.	0.	0.	0.	0.
0.	0.	0.	0.	0.	0.
0.	-0.19867E-03	0.22472E-01	-0.88048E-03	0.	0.
0.	0.	0.	0.	0.	0.
0.	0.	0.	0.	0.	0.
0.	0.	0.	-0.12813E-01	0.13031E-01	0.
0.	0.	0.	0.	0.	0.
0.	0.	0.	0.	0.	0.
0.	0.	0.	0.	0.11932E-01	-0.11932E-01
0.91260E-03	-0.88048E-03	0.	0.	0.	0.
0.	0.	0.	0.	0.	0.
0.	0.	0.	0.	0.	0.
0.	-0.12813E-01	0.12924E-01	0.	0.	-0.10152E-03
0.	0.	0.	0.	0.	0.
0.	-0.10152E-03	0.	0.	0.	0.
0.	0.	0.	0.	0.10355E-01	0.
0.	0.	0.	0.	-0.10152E-03	0.
0.	0.	0.	0.	0.	0.
-0.10152E-03	0.	0.	0.	0.	0.
0.10355E-01	0.50761E-03	0.	0.	0.	0.
0.	0.	0.	0.	0.15515E-02	0.
0.	0.	-0.10804E-01	0.	0.	0.
0.	0.				

NOMINAL SOLUTIONS FOR OUTPUT VARIABLES

0.96579E-01	0.55928E-01	0.55074E-01	-0.19775E-00	-0.19339E-00	-0.11199E-00
-0.11028E-00	0.42955E-00	0.42205E-00	0.38865E-00	0.38213E-00	-0.14232E 01
-0.13867E 01	-0.51280E 00	-0.50419E 00	0.25855E 01	0.25631E 01	0.50846E-02
-0.15491E-01	0.51620E-04	-0.15727E-03	0.25631E 01		

Figure 72. Matrix Equations and Solutions (at -50 C) (Cont)

```
TOTAL CHANGE IN OUTPUT VARIABLES BETWEEN 25 DEGREES AND-50.00 DEGREES
    OUTPUT VARIABLE NO  1 HAS A CHANGE OF -0.252919E-04
    OUTPUT VARIABLE NO  2 HAS A CHANGE OF  0.391386E-03
    OUTPUT VARIABLE NO  3 HAS A CHANGE OF  0.621384E-03
    OUTPUT VARIABLE NO  4 HAS A CHANGE OF  0.525043E-01
    OUTPUT VARIABLE NO  5 HAS A CHANGE OF  0.498726E-01
    OUTPUT VARIABLE NO  6 HAS A CHANGE OF  0.278582E-01
    OUTPUT VARIABLE NO  7 HAS A CHANGE OF  0.268386E-01
    OUTPUT VARIABLE NO  8 HAS A CHANGE OF -0.222752E-00
    OUTPUT VARIABLE NO  9 HAS A CHANGE OF -0.214718E-00
    OUTPUT VARIABLE NO 10 HAS A CHANGE OF -0.147443E-00
    OUTPUT VARIABLE NO 11 HAS A CHANGE OF -0.142467E-00
    OUTPUT VARIABLE NO 12 HAS A CHANGE OF  0.109114E 01
    OUTPUT VARIABLE NO 13 HAS A CHANGE OF  0.104034E 01
    OUTPUT VARIABLE NO 14 HAS A CHANGE OF  0.120021E-00
    OUTPUT VARIABLE NO 15 HAS A CHANGE OF  0.115055E-00
    OUTPUT VARIABLE NO 16 HAS A CHANGE OF -0.105486E 01
    OUTPUT VARIABLE NO 17 HAS A CHANGE OF -0.103691E 01
    OUTPUT VARIABLE NO 18 HAS A CHANGE OF -0.210533E-02
    OUTPUT VARIABLE NO 19 HAS A CHANGE OF  0.106884E-01
    OUTPUT VARIABLE NO 20 HAS A CHANGE OF -0.202790E-04
    OUTPUT VARIABLE NO 21 HAS A CHANGE OF  0.104525E-03
    OUTPUT VARIABLE NO 22 HAS A CHANGE OF -0.103691E 01
```

Figure 73. Total Change in Input Variables Between 25 C and -50 C

It is significant to note that the initial value of IL2 equals -0.262 ma and the expected change equals 0.105 ma, which is about 40 percent. Perhaps of greatest significance is the fact that this is the effect due to temperature alone and does not include any other degrading effects that parameter tolerance might have. The effects of temperature are not as great on IL1. However, it is still in the neighborhood of 28 percent.

Temperature = 0 C, 50 C

Figures 74 through 87 present the results of the analysis performed at 0 C and at +50 C. The format is the same as previously described in the analysis at -50 C and the computer print outs are identified as to their temperature identifications. All of the results are summarized in Table 6. As this table demonstrates, the most serious application of this circuit, from a temperature standpoint, is the -50 C level as was anticipated. This is due mainly to the large temperature differential that is experienced (-75 C). It should also be noted that the change in load currents by increasing temperature 25 C is not the same as that obtained by decreasing it 25 C with a sign reverse, indicating some of the non-linear effects of temperature. It should also be reiterated at this point that the values for the temperature coefficient, θ, are in themselves non-linear, but for the purpose of this analysis are assumed to be linear. This would further add to the complexity of prediction of temperature effects and it is impossible to predict what the effects would be.

The results of this analysis can only indicate that temperature alone can have a considerable effect on degrading the circuit performance. With combined circuit tolerance, it is felt that this degradation would be more pronounced. The major factors contributing to this temperature degradation are the transistors, specifically the gains. If satisfactory circuit performance is not obtained, then a tighter control on this parameter would be necessary.

Table 10. Comparison of Methods of Calculating Changes

	$\frac{\partial I}{\partial T}$ @ 25°C	Value @ 25°C	Value @ -50°C	Value @ -50 minus Value @ 25	% Change from 25°C	$\frac{\partial I}{\partial T}$ x (-75°C)		
IL1	.154 μA/°C	.072 mA	.052 mA	-.020 mA	-27.8	-.012 mA		
IL2	-1.25 μA/°C	-.262 mA	-.157 mA	.105 mA	40.1	.096 mA		

50°C

	Value @ 0°	Value @ 0° minus Value @ 25	% change from 25°C	$\frac{\partial I}{\partial T}$ x (-25°C)	Value @ 50°C	Value @ 50°C minus Value @ 25°C	% change from 25°C	$\frac{\partial I}{\partial T}$ x (25°C)
IL1	.067 mA	-.005 mA	-6.5	-.004 mA	.075 mA	.003 mA	4.3	.004 mA
IL2	-.229 mA	.032 mA	12.2	.031	-.292 mA	-.030 mA	-11.5	-.031 mA

0°C +50°C

THIS SET OF CALCULATIONS PERFORMED AT TEMPERATURE = 0.

```
PARAMETER NO  1 CAUSES A CHANGE IN OUTPUT VARIABLE NO 20 =  0.108172E-07
PARAMETER NO  2 CAUSES A CHANGE IN OUTPUT VARIABLE NO 20 =  0.382252E-07
PARAMETER NO  3 CAUSES A CHANGE IN OUTPUT VARIABLE NO 20 =  0.113278E-06
PARAMETER NO  4 CAUSES A CHANGE IN OUTPUT VARIABLE NO 20 = -0.818175E-07
PARAMETER NO  5 CAUSES A CHANGE IN OUTPUT VARIABLE NO 20 = -0.209047E-06
PARAMETER NO  6 CAUSES A CHANGE IN OUTPUT VARIABLE NO 20 =  0.260974E-06
PARAMETER NO  7 CAUSES A CHANGE IN OUTPUT VARIABLE NO 20 = -0.213902E-07
PARAMETER NO  8 CAUSES A CHANGE IN OUTPUT VARIABLE NO 20 = -0.266304E-07
PARAMETER NO  9 CAUSES A CHANGE IN OUTPUT VARIABLE NO 20 =  0.107900E-06
PARAMETER NO 10 CAUSES A CHANGE IN OUTPUT VARIABLE NO 20 = -0.884799E-07
PARAMETER NO 11 CAUSES A CHANGE IN OUTPUT VARIABLE NO 20 = -0.218274E-06
PARAMETER NO 12 CAUSES A CHANGE IN OUTPUT VARIABLE NO 20 =  0.262864E-06
PARAMETER NO 13 CAUSES A CHANGE IN OUTPUT VARIABLE NO 20 =  0.284157E-06
PARAMETER NO 14 CAUSES A CHANGE IN OUTPUT VARIABLE NO 20 = -0.279239E-07
PARAMETER NO 15 CAUSES A CHANGE IN OUTPUT VARIABLE NO 20 = -0.733675E-08
PARAMETER NO 16 CAUSES A CHANGE IN OUTPUT VARIABLE NO 20 = -0.141065E-08
PARAMETER NO 17 CAUSES A CHANGE IN OUTPUT VARIABLE NO 20 = -0.165831E-08
PARAMETER NO 18 CAUSES A CHANGE IN OUTPUT VARIABLE NO 20 =  0.212507E-08
PARAMETER NO 19 CAUSES A CHANGE IN OUTPUT VARIABLE NO 20 =  0.215523E-08
PARAMETER NO 20 CAUSES A CHANGE IN OUTPUT VARIABLE NO 20 = -0.209480E-09
PARAMETER NO 21 CAUSES A CHANGE IN OUTPUT VARIABLE NO 20 = -0.272586E-09
PARAMETER NO 22 CAUSES A CHANGE IN OUTPUT VARIABLE NO 20 = -0.834245E-12
PARAMETER NO 23 CAUSES A CHANGE IN OUTPUT VARIABLE NO 20 = -0.
PARAMETER NO 24 CAUSES A CHANGE IN OUTPUT VARIABLE NO 20 =  0.752499E-13
PARAMETER NO 25 CAUSES A CHANGE IN OUTPUT VARIABLE NO 20 = -0.
PARAMETER NO 26 CAUSES A CHANGE IN OUTPUT VARIABLE NO 20 =  0.631944E-08
PARAMETER NO 27 CAUSES A CHANGE IN OUTPUT VARIABLE NO 20 = -0.255574E-08
PARAMETER NO 28 CAUSES A CHANGE IN OUTPUT VARIABLE NO 20 =  0.610882E-06
PARAMETER NO 29 CAUSES A CHANGE IN OUTPUT VARIABLE NO 20 =  0.660647E-06
PARAMETER NO 30 CAUSES A CHANGE IN OUTPUT VARIABLE NO 20 =  0.285045E-07
PARAMETER NO 31 CAUSES A CHANGE IN OUTPUT VARIABLE NO 20 =  0.267391E-11
PARAMETER NO 32 CAUSES A CHANGE IN OUTPUT VARIABLE NO 20 = -0.
PARAMETER NO 33 CAUSES A CHANGE IN OUTPUT VARIABLE NO 20 = -0.
PARAMETER NO 34 CAUSES A CHANGE IN OUTPUT VARIABLE NO 20 = -0.
PARAMETER NO 35 CAUSES A CHANGE IN OUTPUT VARIABLE NO 20 = -0.
PARAMETER NO 36 CAUSES A CHANGE IN OUTPUT VARIABLE NO 20 = -0.
PARAMETER NO 37 CAUSES A CHANGE IN OUTPUT VARIABLE NO 20 = -0.
PARAMETER NO 38 CAUSES A CHANGE IN OUTPUT VARIABLE NO 20 = -0.
PARAMETER NO 39 CAUSES A CHANGE IN OUTPUT VARIABLE NO 20 = -0.
PARAMETER NO 40 CAUSES A CHANGE IN OUTPUT VARIABLE NO 20 = -0.
```

Figure 74. Change in IL1 Due to Individual Input Parameters (at 0 C)

```
PARAMETER NO 41 CAUSES A CHANGE IN OUTPUT VARIABLE NO 20 =  0.213500E-06
PARAMETER NO 42 CAUSES A CHANGE IN OUTPUT VARIABLE NO 20 =  0.239383E-06
PARAMETER NO 43 CAUSES A CHANGE IN OUTPUT VARIABLE NO 20 =  0.215084E-06
PARAMETER NO 44 CAUSES A CHANGE IN OUTPUT VARIABLE NO 20 =  0.213088E-06
PARAMETER NO 45 CAUSES A CHANGE IN OUTPUT VARIABLE NO 20 =  0.191101E-08
PARAMETER NO 46 CAUSES A CHANGE IN OUTPUT VARIABLE NO 20 =  0.232865E-08
PARAMETER NO 47 CAUSES A CHANGE IN OUTPUT VARIABLE NO 20 = -0.597072E-11
PARAMETER NO 48 CAUSES A CHANGE IN OUTPUT VARIABLE NO 20 = -0.
PARAMETER NO 49 CAUSES A CHANGE IN OUTPUT VARIABLE NO 20 =  0.
PARAMETER NO 50 CAUSES A CHANGE IN OUTPUT VARIABLE NO 20 =  0.
PARAMETER NO 51 CAUSES A CHANGE IN OUTPUT VARIABLE NO 20 =  0.
PARAMETER NO 52 CAUSES A CHANGE IN OUTPUT VARIABLE NO 20 =  0.
PARAMETER NO 53 CAUSES A CHANGE IN OUTPUT VARIABLE NO 20 =  0.
PARAMETER NO 54 CAUSES A CHANGE IN OUTPUT VARIABLE NO 20 =  0.
PARAMETER NO 55 CAUSES A CHANGE IN OUTPUT VARIABLE NO 20 =  0.
PARAMETER NO 56 CAUSES A CHANGE IN OUTPUT VARIABLE NO 20 =  0.
PARAMETER NO 57 CAUSES A CHANGE IN OUTPUT VARIABLE NO 20 = -0.
PARAMETER NO 58 CAUSES A CHANGE IN OUTPUT VARIABLE NO 20 = -0.
PARAMETER NO 59 CAUSES A CHANGE IN OUTPUT VARIABLE NO 20 = -0.
PARAMETER NO 60 CAUSES A CHANGE IN OUTPUT VARIABLE NO 20 = -0.
PARAMETER NO 61 CAUSES A CHANGE IN OUTPUT VARIABLE NO 20 = -0.
PARAMETER NO 62 CAUSES A CHANGE IN OUTPUT VARIABLE NO 20 = -0.
PARAMETER NO 63 CAUSES A CHANGE IN OUTPUT VARIABLE NO 20 = -0.
PARAMETER NO 64 CAUSES A CHANGE IN OUTPUT VARIABLE NO 20 = -0.
PARAMETER NO 65 CAUSES A CHANGE IN OUTPUT VARIABLE NO 20 = -0.674288E-06
PARAMETER NO 66 CAUSES A CHANGE IN OUTPUT VARIABLE NO 20 = -0.227099E-05
PARAMETER NO 67 CAUSES A CHANGE IN OUTPUT VARIABLE NO 20 = -0.692982E-06
PARAMETER NO 68 CAUSES A CHANGE IN OUTPUT VARIABLE NO 20 = -0.202191E-05
PARAMETER NO 69 CAUSES A CHANGE IN OUTPUT VARIABLE NO 20 = -0.766332E-08
PARAMETER NO 70 CAUSES A CHANGE IN OUTPUT VARIABLE NO 20 = -0.223734E-07
PARAMETER NO 71 CAUSES A CHANGE IN OUTPUT VARIABLE NO 20 =  0.759818E-11
PARAMETER NO 72 CAUSES A CHANGE IN OUTPUT VARIABLE NO 20 = -0.
PARAMETER NO 73 CAUSES A CHANGE IN OUTPUT VARIABLE NO 20 =  0.105273E-07
PARAMETER NO 74 CAUSES A CHANGE IN OUTPUT VARIABLE NO 20 = -0.310303E-10

TOTAL CHANGE IN OUTPUT VARIABLE NO 20= -0.309257E-05
```

Figure 75. Change in IL1 Due to Individual Input Parameters (at 0 C) (Cont)

THIS SET OF CALCULATIONS PERFORMED AT TEMPERATURE = 0.

```
PARAMETER NO  1 CAUSES A CHANGE IN OUTPUT VARIABLE NO 21 = -0.652678E-08
PARAMETER NO  2 CAUSES A CHANGE IN OUTPUT VARIABLE NO 21 =  0.339423E-08
PARAMETER NO  3 CAUSES A CHANGE IN OUTPUT VARIABLE NO 21 = -0.804837E-07
PARAMETER NO  4 CAUSES A CHANGE IN OUTPUT VARIABLE NO 21 =  0.577513E-07
PARAMETER NO  5 CAUSES A CHANGE IN OUTPUT VARIABLE NO 21 =  0.148103E-06
PARAMETER NO  6 CAUSES A CHANGE IN OUTPUT VARIABLE NO 21 = -0.184906E-06
PARAMETER NO  7 CAUSES A CHANGE IN OUTPUT VARIABLE NO 21 = -0.913418E-07
PARAMETER NO  8 CAUSES A CHANGE IN OUTPUT VARIABLE NO 21 =  0.188673E-07
PARAMETER NO  9 CAUSES A CHANGE IN OUTPUT VARIABLE NO 21 = -0.257125E-07
PARAMETER NO 10 CAUSES A CHANGE IN OUTPUT VARIABLE NO 21 =  0.276233E-07
PARAMETER NO 11 CAUSES A CHANGE IN OUTPUT VARIABLE NO 21 =  0.595561E-07
PARAMETER NO 12 CAUSES A CHANGE IN OUTPUT VARIABLE NO 21 = -0.714937E-07
PARAMETER NO 13 CAUSES A CHANGE IN OUTPUT VARIABLE NO 21 =  0.654037E-08
PARAMETER NO 14 CAUSES A CHANGE IN OUTPUT VARIABLE NO 21 =  0.761888E-08
PARAMETER NO 15 CAUSES A CHANGE IN OUTPUT VARIABLE NO 21 = -0.114412E-07
PARAMETER NO 16 CAUSES A CHANGE IN OUTPUT VARIABLE NO 21 =  0.369656E-07
PARAMETER NO 17 CAUSES A CHANGE IN OUTPUT VARIABLE NO 21 =  0.834170E-06
PARAMETER NO 18 CAUSES A CHANGE IN OUTPUT VARIABLE NO 21 = -0.111725E-05
PARAMETER NO 19 CAUSES A CHANGE IN OUTPUT VARIABLE NO 21 = -0.108459E-05
PARAMETER NO 20 CAUSES A CHANGE IN OUTPUT VARIABLE NO 21 =  0.105525E-06
PARAMETER NO 21 CAUSES A CHANGE IN OUTPUT VARIABLE NO 21 =  0.137270E-06
PARAMETER NO 22 CAUSES A CHANGE IN OUTPUT VARIABLE NO 21 =  0.282340E-09
PARAMETER NO 23 CAUSES A CHANGE IN OUTPUT VARIABLE NO 21 =  0.
PARAMETER NO 24 CAUSES A CHANGE IN OUTPUT VARIABLE NO 21 =  0.187919E-10
PARAMETER NO 25 CAUSES A CHANGE IN OUTPUT VARIABLE NO 21 =  0.
PARAMETER NO 26 CAUSES A CHANGE IN OUTPUT VARIABLE NO 21 =  0.344811E-09
PARAMETER NO 27 CAUSES A CHANGE IN OUTPUT VARIABLE NO 21 = -0.228424E-07
PARAMETER NO 28 CAUSES A CHANGE IN OUTPUT VARIABLE NO 21 = -0.431149E-06
PARAMETER NO 29 CAUSES A CHANGE IN OUTPUT VARIABLE NO 21 = -0.206286E-06
PARAMETER NO 30 CAUSES A CHANGE IN OUTPUT VARIABLE NO 21 = -0.746810E-06
PARAMETER NO 31 CAUSES A CHANGE IN OUTPUT VARIABLE NO 21 = -0.185001E-08
PARAMETER NO 32 CAUSES A CHANGE IN OUTPUT VARIABLE NO 21 =  0.
PARAMETER NO 33 CAUSES A CHANGE IN OUTPUT VARIABLE NO 21 =  0.
PARAMETER NO 34 CAUSES A CHANGE IN OUTPUT VARIABLE NO 21 =  0.
PARAMETER NO 35 CAUSES A CHANGE IN OUTPUT VARIABLE NO 21 =  0.
PARAMETER NO 36 CAUSES A CHANGE IN OUTPUT VARIABLE NO 21 =  0.
PARAMETER NO 37 CAUSES A CHANGE IN OUTPUT VARIABLE NO 21 =  0.
PARAMETER NO 38 CAUSES A CHANGE IN OUTPUT VARIABLE NO 21 =  0.
PARAMETER NO 39 CAUSES A CHANGE IN OUTPUT VARIABLE NO 21 =  0.
PARAMETER NO 40 CAUSES A CHANGE IN OUTPUT VARIABLE NO 21 =  0.
```

Figure 76. Change in IL2 Due to Individual Input Parameters (at 0 C)

```
PARAMETER NO 41 CAUSES A CHANGE IN OUTPUT VARIABLE NO 21 = -0.151202E-06
PARAMETER NO 42 CAUSES A CHANGE IN OUTPUT VARIABLE NO 21 = -0.169661E-06
PARAMETER NO 43 CAUSES A CHANGE IN OUTPUT VARIABLE NO 21 = -0.585657E-07
PARAMETER NO 44 CAUSES A CHANGE IN OUTPUT VARIABLE NO 21 = -0.581397E-07
PARAMETER NO 45 CAUSES A CHANGE IN OUTPUT VARIABLE NO 21 = -0.100583E-05
PARAMETER NO 46 CAUSES A CHANGE IN OUTPUT VARIABLE NO 21 = -0.118693E-05
PARAMETER NO 47 CAUSES A CHANGE IN OUTPUT VARIABLE NO 21 = -0.393846E-09
PARAMETER NO 48 CAUSES A CHANGE IN OUTPUT VARIABLE NO 21 =  0.
PARAMETER NO 49 CAUSES A CHANGE IN OUTPUT VARIABLE NO 21 = -0.
PARAMETER NO 50 CAUSES A CHANGE IN OUTPUT VARIABLE NO 21 = -0.
PARAMETER NO 51 CAUSES A CHANGE IN OUTPUT VARIABLE NO 21 = -0.
PARAMETER NO 52 CAUSES A CHANGE IN OUTPUT VARIABLE NO 21 = -0.
PARAMETER NO 53 CAUSES A CHANGE IN OUTPUT VARIABLE NO 21 = -0.
PARAMETER NO 54 CAUSES A CHANGE IN OUTPUT VARIABLE NO 21 = -0.
PARAMETER NO 55 CAUSES A CHANGE IN OUTPUT VARIABLE NO 21 = -0.
PARAMETER NO 56 CAUSES A CHANGE IN OUTPUT VARIABLE NO 21 = -0.
PARAMETER NO 57 CAUSES A CHANGE IN OUTPUT VARIABLE NO 21 =  0.
PARAMETER NO 58 CAUSES A CHANGE IN OUTPUT VARIABLE NO 21 =  0.
PARAMETER NO 59 CAUSES A CHANGE IN OUTPUT VARIABLE NO 21 =  0.
PARAMETER NO 60 CAUSES A CHANGE IN OUTPUT VARIABLE NO 21 =  0.
PARAMETER NO 61 CAUSES A CHANGE IN OUTPUT VARIABLE NO 21 =  0.
PARAMETER NO 62 CAUSES A CHANGE IN OUTPUT VARIABLE NO 21 =  0.
PARAMETER NO 63 CAUSES A CHANGE IN OUTPUT VARIABLE NO 21 =  0.
PARAMETER NO 64 CAUSES A CHANGE IN OUTPUT VARIABLE NO 21 =  0.
PARAMETER NO 65 CAUSES A CHANGE IN OUTPUT VARIABLE NO 21 =  0.477271E-06
PARAMETER NO 66 CAUSES A CHANGE IN OUTPUT VARIABLE NO 21 =  0.160889E-05
PARAMETER NO 67 CAUSES A CHANGE IN OUTPUT VARIABLE NO 21 =  0.196666E-06
PARAMETER NO 68 CAUSES A CHANGE IN OUTPUT VARIABLE NO 21 =  0.551620E-06
PARAMETER NO 69 CAUSES A CHANGE IN OUTPUT VARIABLE NO 21 =  0.226029E-05
PARAMETER NO 70 CAUSES A CHANGE IN OUTPUT VARIABLE NO 21 =  0.112659E-04
PARAMETER NO 71 CAUSES A CHANGE IN OUTPUT VARIABLE NO 21 =  0.651358E-09
PARAMETER NO 72 CAUSES A CHANGE IN OUTPUT VARIABLE NO 21 =  0.
PARAMETER NO 73 CAUSES A CHANGE IN OUTPUT VARIABLE NO 21 = -0.276072E-06
PARAMETER NO 74 CAUSES A CHANGE IN OUTPUT VARIABLE NO 21 =  0.132740E-07

TOTAL CHANGE IN OUTPUT VARIABLE NO 21=  0.108291E-04
```

Figure 77. Change in IL2 Due to Individual Input Parameters (at 0 C) (Cont)

SOLUTIONS OF OUTPUT VARIABLES AT TEMPERATURE = 0. DEGREES

NOMINAL MATRIX

0.53223E-02	-0.19668E-03	0.	0.	0.	0.
0.	0.	0.	0.	0.	0.
0.	0.	0.	0.	0.	-0.10050E-03
0.	-0.19668E-03	0.75827E-03	-0.42639E-03	0.	0.
0.	0.	0.	0.	0.	0.
0.	0.	0.	0.	0.	0.
0.	0.	0.	-0.10312E-01	0.10509E-01	0.
0.	0.	0.	0.	0.	0.
0.	0.	0.	0.	0.	0.
0.	0.	0.	0.	0.98855E-02	-0.98855E-02
0.45820E-03	-0.42639E-03	0.	0.	0.	0.
0.	0.	0.	0.	0.	0.
0.	0.	0.	0.	0.	0.
0.	-0.10312E-01	0.10720E-01	-0.19668E-03	0.	0.
0.	0.	0.	0.	0.	0.
0.	0.	0.	0.	-0.10050E-03	0.
0.	0.	0.	-0.19668E-03	0.75827E-03	-0.42639E-03
0.	0.	0.	0.	0.	0.
0.	0.	0.	0.	0.	0.
0.	0.	0.	0.	0.	-0.10312E-01
0.10509E-01	0.	0.	0.	0.	0.
0.	0.	0.	0.	0.	0.
0.	0.	0.	0.	0.	0.
0.98855E-02	-0.98855E-02	0.45820E-03	-0.42639E-03	0.	0.
0.	0.	0.	0.	0.	0.
0.	0.	0.	0.	0.	0.
0.	0.	0.	-0.10312E-01	0.10720E-01	-0.19668E-03
0.	0.	0.	0.	0.	0.
0.	-0.10050E-03	0.	0.	0.	0.
0.	0.	0.	0.	0.	-0.19668E-03
0.38294E-02	-0.42639E-03	0.	0.	0.	0.
0.	0.	0.	0.	0.	0.
0.	0.	0.	0.	0.	0.
0.	-0.10312E-01	0.10529E-01	0.	0.	0.
0.	0.	0.	0.	0.	0.
0.	0.	0.	0.	0.	0.
0.	0.	0.98855E-02	-0.98855E-02	0.45820E-03	-0.42639E-03
0.	0.	0.	0.	0.	0.
0.	0.	0.	0.	0.	0.
0.	0.	0.	0.	0.	-0.10312E-01

Figure 78 . Matrix Equation and Solution (at 0 C)

0.10720E-01	-0.19668E-03	0.	0.	0.	0.
-0.10050E-03	0.	0.	0.	0.	0.
0.	0.	0.	0.	0.	0.
0.	-0.19668E-03	0.19342E-01	-0.42639E-03	0.	0.
0.	0.	0.	0.	0.	0.
0.	0.	0.	0.	0.	0.
0.	0.	0.	-0.10312E-01	0.10529E-01	0.
0.	0.	0.	0.	0.	0.
0.	0.	0.	0.	0.	0.
0.	0.	0.	0.	0.98855E-02	-0.98855E-02
0.45820E-03	-0.42639E-03	0.	0.	0.	0.
0.	0.	0.	0.	0.	0.
0.	0.	0.	0.	0.	0.
0.	-0.10312E-01	0.10422E-01	0.	0.	-0.10050E-03
0.	0.	0.	0.	0.	0.
0.	-0.10050E-03	0.	0.	0.	0.
0.	0.	0.	0.	0.10251E-01	0.
0.	0.	0.	0.	-0.10050E-03	0.
0.	0.	0.	0.	0.	0.
-0.10050E-03	0.	0.	0.	0.	0.
0.10251E-01	0.50251E-03	0.	0.	0.	0.
0.	0.	0.	0.	0.15515E-02	0.
0.	0.	-0.10804E-01	0.	0.	0.
0.	0.				

NOMINAL SOLUTIONS FOR OUTPUT VARIABLES

0.96609E-01	0.55908E-01	0.54862E-01	-0.23925E-00	-0.23283E-00	-0.13474E-00
-0.13222E-00	0.59925E 00	0.58548E 00	0.48851E-00	0.47846E-00	-0.21672E 01
-0.20959E 01	-0.59270E 00	-0.58051E 00	0.33181E 01	0.32829E 01	0.66871E-02
-0.22830E-01	0.67208E-04	-0.22945E-03	0.32829E 01		

Figure 79. Matrix Equation and Solution (at 0 C) (Cont)

```
TOTAL CHANGE IN OUTPUT VARIABLES BETWEEN 25 DEGREES AND  0.   DEGREES

     OUTPUT VARIABLE NO  1 HAS A CHANGE OF  0.425056E-05
     OUTPUT VARIABLE NO  2 HAS A CHANGE OF  0.371901E-03
     OUTPUT VARIABLE NO  3 HAS A CHANGE OF  0.409502E-03
     OUTPUT VARIABLE NO  4 HAS A CHANGE OF  0.110071E-01
     OUTPUT VARIABLE NO  5 HAS A CHANGE OF  0.104318E-01
     OUTPUT VARIABLE NO  6 HAS A CHANGE OF  0.510669E-02
     OUTPUT VARIABLE NO  7 HAS A CHANGE OF  0.489890E-02
     OUTPUT VARIABLE NO  8 HAS A CHANGE OF -0.530491E-01
     OUTPUT VARIABLE NO  9 HAS A CHANGE OF -0.512830E-01
     OUTPUT VARIABLE NO 10 HAS A CHANGE OF -0.475866E-01
     OUTPUT VARIABLE NO 11 HAS A CHANGE OF -0.461357E-01
     OUTPUT VARIABLE NO 12 HAS A CHANGE OF  0.347113E-00
     OUTPUT VARIABLE NO 13 HAS A CHANGE OF  0.331159E-00
     OUTPUT VARIABLE NO 14 HAS A CHANGE OF  0.401215E-01
     OUTPUT VARIABLE NO 15 HAS A CHANGE OF  0.387391E-01
     OUTPUT VARIABLE NO 16 HAS A CHANGE OF -0.322230E-00
     OUTPUT VARIABLE NO 17 HAS A CHANGE OF -0.317141E-00
     OUTPUT VARIABLE NO 18 HAS A CHANGE OF -0.502733E-03
     OUTPUT VARIABLE NO 19 HAS A CHANGE OF  0.334893E-02
     OUTPUT VARIABLE NO 20 HAS A CHANGE OF -0.469129E-05
     OUTPUT VARIABLE NO 21 HAS A CHANGE OF  0.323420E-04
     OUTPUT VARIABLE NO 22 HAS A CHANGE OF -0.317141E-00
```

Figure 80. Total Change in Output Variables Between 25 C and 0 C

```
THIS SET OF CALCULATIONS PERFORMED AT TEMPERATURE = 50.00

PARAMETER NO  1 CAUSES A CHANGE IN OUTPUT VARIABLE NO 20 = -0.108172E-07
PARAMETER NO  2 CAUSES A CHANGE IN OUTPUT VARIABLE NO 20 = -0.382252E-07
PARAMETER NO  3 CAUSES A CHANGE IN OUTPUT VARIABLE NO 20 = -0.113278E-06
PARAMETER NO  4 CAUSES A CHANGE IN OUTPUT VARIABLE NO 20 =  0.818175E-07
PARAMETER NO  5 CAUSES A CHANGE IN OUTPUT VARIABLE NO 20 =  0.209047E-06
PARAMETER NO  6 CAUSES A CHANGE IN OUTPUT VARIABLE NO 20 = -0.260974E-06
PARAMETER NO  7 CAUSES A CHANGE IN OUTPUT VARIABLE NO 20 =  0.213902E-07
PARAMETER NO  8 CAUSES A CHANGE IN OUTPUT VARIABLE NO 20 =  0.266304E-07
PARAMETER NO  9 CAUSES A CHANGE IN OUTPUT VARIABLE NO 20 = -0.107900E-06
PARAMETER NO 10 CAUSES A CHANGE IN OUTPUT VARIABLE NO 20 =  0.884799E-07
PARAMETER NO 11 CAUSES A CHANGE IN OUTPUT VARIABLE NO 20 =  0.218274E-06
PARAMETER NO 12 CAUSES A CHANGE IN OUTPUT VARIABLE NO 20 = -0.262864E-06
PARAMETER NO 13 CAUSES A CHANGE IN OUTPUT VARIABLE NO 20 = -0.284157E-06
PARAMETER NO 14 CAUSES A CHANGE IN OUTPUT VARIABLE NO 20 =  0.279239E-07
PARAMETER NO 15 CAUSES A CHANGE IN OUTPUT VARIABLE NO 20 =  0.733675E-08
PARAMETER NO 16 CAUSES A CHANGE IN OUTPUT VARIABLE NO 20 =  0.141065E-08
PARAMETER NO 17 CAUSES A CHANGE IN OUTPUT VARIABLE NO 20 =  0.165831E-08
PARAMETER NO 18 CAUSES A CHANGE IN OUTPUT VARIABLE NO 20 = -0.212507E-08
PARAMETER NO 19 CAUSES A CHANGE IN OUTPUT VARIABLE NO 20 = -0.215523E-08
PARAMETER NO 20 CAUSES A CHANGE IN OUTPUT VARIABLE NO 20 =  0.209480E-09
PARAMETER NO 21 CAUSES A CHANGE IN OUTPUT VARIABLE NO 20 =  0.272586E-09
PARAMETER NO 22 CAUSES A CHANGE IN OUTPUT VARIABLE NO 20 =  0.834245E-12
PARAMETER NO 23 CAUSES A CHANGE IN OUTPUT VARIABLE NO 20 =  0.
PARAMETER NO 24 CAUSES A CHANGE IN OUTPUT VARIABLE NO 20 = -0.752499E-13
PARAMETER NO 25 CAUSES A CHANGE IN OUTPUT VARIABLE NO 20 =  0.
PARAMETER NO 26 CAUSES A CHANGE IN OUTPUT VARIABLE NO 20 = -0.631944E-08
PARAMETER NO 27 CAUSES A CHANGE IN OUTPUT VARIABLE NO 20 =  0.255574E-08
PARAMETER NO 28 CAUSES A CHANGE IN OUTPUT VARIABLE NO 20 = -0.610882E-06
PARAMETER NO 29 CAUSES A CHANGE IN OUTPUT VARIABLE NO 20 = -0.660647E-06
PARAMETER NO 30 CAUSES A CHANGE IN OUTPUT VARIABLE NO 20 = -0.285045E-07
PARAMETER NO 31 CAUSES A CHANGE IN OUTPUT VARIABLE NO 20 = -0.267391E-11
PARAMETER NO 32 CAUSES A CHANGE IN OUTPUT VARIABLE NO 20 =  0.
PARAMETER NO 33 CAUSES A CHANGE IN OUTPUT VARIABLE NO 20 =  0.
PARAMETER NO 34 CAUSES A CHANGE IN OUTPUT VARIABLE NO 20 =  0.
PARAMETER NO 35 CAUSES A CHANGE IN OUTPUT VARIABLE NO 20 =  0.
PARAMETER NO 36 CAUSES A CHANGE IN OUTPUT VARIABLE NO 20 =  0.
PARAMETER NO 37 CAUSES A CHANGE IN OUTPUT VARIABLE NO 20 =  0.
PARAMETER NO 38 CAUSES A CHANGE IN OUTPUT VARIABLE NO 20 =  0.
PARAMETER NO 39 CAUSES A CHANGE IN OUTPUT VARIABLE NO 20 =  0.
PARAMETER NO 40 CAUSES A CHANGE IN OUTPUT VARIABLE NO 20 =  0.
```

Figure 81. Change in ILl Due to Individual Input Parameters (at 50 C)

```
PARAMETER NO 41 CAUSES A CHANGE IN OUTPUT VARIABLE NO 20 = -0.213500E-06
PARAMETER NO 42 CAUSES A CHANGE IN OUTPUT VARIABLE NO 20 = -0.239383E-06
PARAMETER NO 43 CAUSES A CHANGE IN OUTPUT VARIABLE NO 20 = -0.215084E-06
PARAMETER NO 44 CAUSES A CHANGE IN OUTPUT VARIABLE NO 20 = -0.213088E-06
PARAMETER NO 45 CAUSES A CHANGE IN OUTPUT VARIABLE NO 20 = -0.191101E-08
PARAMETER NO 46 CAUSES A CHANGE IN OUTPUT VARIABLE NO 20 = -0.232865E-08
PARAMETER NO 47 CAUSES A CHANGE IN OUTPUT VARIABLE NO 20 =  0.597072E-11
PARAMETER NO 48 CAUSES A CHANGE IN OUTPUT VARIABLE NO 20 =  0.
PARAMETER NO 49 CAUSES A CHANGE IN OUTPUT VARIABLE NO 20 = -0.
PARAMETER NO 50 CAUSES A CHANGE IN OUTPUT VARIABLE NO 20 = -0.
PARAMETER NO 51 CAUSES A CHANGE IN OUTPUT VARIABLE NO 20 = -0.
PARAMETER NO 52 CAUSES A CHANGE IN OUTPUT VARIABLE NO 20 = -0.
PARAMETER NO 53 CAUSES A CHANGE IN OUTPUT VARIABLE NO 20 = -0.
PARAMETER NO 54 CAUSES A CHANGE IN OUTPUT VARIABLE NO 20 = -0.
PARAMETER NO 55 CAUSES A CHANGE IN OUTPUT VARIABLE NO 20 = -0.
PARAMETER NO 56 CAUSES A CHANGE IN OUTPUT VARIABLE NO 20 = -0.
PARAMETER NO 57 CAUSES A CHANGE IN OUTPUT VARIABLE NO 20 =  0.
PARAMETER NO 58 CAUSES A CHANGE IN OUTPUT VARIABLE NO 20 =  0.
PARAMETER NO 59 CAUSES A CHANGE IN OUTPUT VARIABLE NO 20 =  0.
PARAMETER NO 60 CAUSES A CHANGE IN OUTPUT VARIABLE NO 20 =  0.
PARAMETER NO 61 CAUSES A CHANGE IN OUTPUT VARIABLE NO 20 =  0.
PARAMETER NO 62 CAUSES A CHANGE IN OUTPUT VARIABLE NO 20 =  0.
PARAMETER NO 63 CAUSES A CHANGE IN OUTPUT VARIABLE NO 20 =  0.
PARAMETER NO 64 CAUSES A CHANGE IN OUTPUT VARIABLE NO 20 =  0.
PARAMETER NO 65 CAUSES A CHANGE IN OUTPUT VARIABLE NO 20 =  0.674288E-06
PARAMETER NO 66 CAUSES A CHANGE IN OUTPUT VARIABLE NO 20 =  0.227099E-05
PARAMETER NO 67 CAUSES A CHANGE IN OUTPUT VARIABLE NO 20 =  0.692982E-06
PARAMETER NO 68 CAUSES A CHANGE IN OUTPUT VARIABLE NO 20 =  0.202191E-05
PARAMETER NO 69 CAUSES A CHANGE IN OUTPUT VARIABLE NO 20 =  0.766332E-08
PARAMETER NO 70 CAUSES A CHANGE IN OUTPUT VARIABLE NO 20 =  0.223734E-07
PARAMETER NO 71 CAUSES A CHANGE IN OUTPUT VARIABLE NO 20 = -0.759818E-11
PARAMETER NO 72 CAUSES A CHANGE IN OUTPUT VARIABLE NO 20 =  0.
PARAMETER NO 73 CAUSES A CHANGE IN OUTPUT VARIABLE NO 20 = -0.105273E-07
PARAMETER NO 74 CAUSES A CHANGE IN OUTPUT VARIABLE NO 20 =  0.310303E-10

TOTAL CHANGE IN OUTPUT VARIABLE NO 20=  0.309257E-05
```

Figure 82. Change in IL1 Due to Individual Input Parameters (at 50 C) (Cont)

```
THIS SET OF CALCULATIONS PERFORMED AT TEMPERATURE = 50.00

PARAMETER NO  1 CAUSES A CHANGE IN OUTPUT VARIABLE NO 21 =  0.652678E-08
PARAMETER NO  2 CAUSES A CHANGE IN OUTPUT VARIABLE NO 21 = -0.339423E-08
PARAMETER NO  3 CAUSES A CHANGE IN OUTPUT VARIABLE NO 21 =  0.804837E-07
PARAMETER NO  4 CAUSES A CHANGE IN OUTPUT VARIABLE NO 21 = -0.577513E-07
PARAMETER NO  5 CAUSES A CHANGE IN OUTPUT VARIABLE NO 21 = -0.148103E-06
PARAMETER NO  6 CAUSES A CHANGE IN OUTPUT VARIABLE NO 21 =  0.184906E-06
PARAMETER NO  7 CAUSES A CHANGE IN OUTPUT VARIABLE NO 21 =  0.913418E-07
PARAMETER NO  8 CAUSES A CHANGE IN OUTPUT VARIABLE NO 21 = -0.188673E-07
PARAMETER NO  9 CAUSES A CHANGE IN OUTPUT VARIABLE NO 21 =  0.257125E-07
PARAMETER NO 10 CAUSES A CHANGE IN OUTPUT VARIABLE NO 21 = -0.276233E-07
PARAMETER NO 11 CAUSES A CHANGE IN OUTPUT VARIABLE NO 21 = -0.595561E-07
PARAMETER NO 12 CAUSES A CHANGE IN OUTPUT VARIABLE NO 21 =  0.714937E-07
PARAMETER NO 13 CAUSES A CHANGE IN OUTPUT VARIABLE NO 21 = -0.654037E-08
PARAMETER NO 14 CAUSES A CHANGE IN OUTPUT VARIABLE NO 21 = -0.761888E-08
PARAMETER NO 15 CAUSES A CHANGE IN OUTPUT VARIABLE NO 21 =  0.114412E-07
PARAMETER NO 16 CAUSES A CHANGE IN OUTPUT VARIABLE NO 21 = -0.369656E-07
PARAMETER NO 17 CAUSES A CHANGE IN OUTPUT VARIABLE NO 21 = -0.834170E-06
PARAMETER NO 18 CAUSES A CHANGE IN OUTPUT VARIABLE NO 21 =  0.111725E-05
PARAMETER NO 19 CAUSES A CHANGE IN OUTPUT VARIABLE NO 21 =  0.108459E-05
PARAMETER NO 20 CAUSES A CHANGE IN OUTPUT VARIABLE NO 21 = -0.105525E-06
PARAMETER NO 21 CAUSES A CHANGE IN OUTPUT VARIABLE NO 21 = -0.137270E-06
PARAMETER NO 22 CAUSES A CHANGE IN OUTPUT VARIABLE NO 21 = -0.282340E-09
PARAMETER NO 23 CAUSES A CHANGE IN OUTPUT VARIABLE NO 21 = -0.
PARAMETER NO 24 CAUSES A CHANGE IN OUTPUT VARIABLE NO 21 = -0.187919E-10
PARAMETER NO 25 CAUSES A CHANGE IN OUTPUT VARIABLE NO 21 = -0.
PARAMETER NO 26 CAUSES A CHANGE IN OUTPUT VARIABLE NO 21 = -0.344811E-09
PARAMETER NO 27 CAUSES A CHANGE IN OUTPUT VARIABLE NO 21 =  0.228424E-07
PARAMETER NO 28 CAUSES A CHANGE IN OUTPUT VARIABLE NO 21 =  0.431149E-06
PARAMETER NO 29 CAUSES A CHANGE IN OUTPUT VARIABLE NO 21 =  0.206286E-06
PARAMETER NO 30 CAUSES A CHANGE IN OUTPUT VARIABLE NO 21 =  0.746810E-06
PARAMETER NO 31 CAUSES A CHANGE IN OUTPUT VARIABLE NO 21 =  0.185001E-08
PARAMETER NO 32 CAUSES A CHANGE IN OUTPUT VARIABLE NO 21 = -0.
PARAMETER NO 33 CAUSES A CHANGE IN OUTPUT VARIABLE NO 21 = -0.
PARAMETER NO 34 CAUSES A CHANGE IN OUTPUT VARIABLE NO 21 = -0.
PARAMETER NO 35 CAUSES A CHANGE IN OUTPUT VARIABLE NO 21 = -0.
PARAMETER NO 36 CAUSES A CHANGE IN OUTPUT VARIABLE NO 21 = -0.
PARAMETER NO 37 CAUSES A CHANGE IN OUTPUT VARIABLE NO 21 = -0.
PARAMETER NO 38 CAUSES A CHANGE IN OUTPUT VARIABLE NO 21 = -0.
PARAMETER NO 39 CAUSES A CHANGE IN OUTPUT VARIABLE NO 21 = -0.
PARAMETER NO 40 CAUSES A CHANGE IN OUTPUT VARIABLE NO 21 = -0.
```

Figure 83. Change in IL1 Due to Individual Input Parameters (at 50 C)

```
PARAMETER NO 41 CAUSES A CHANGE IN OUTPUT VARIABLE NO 21 =  0.151202E-06
PARAMETER NO 42 CAUSES A CHANGE IN OUTPUT VARIABLE NO 21 =  0.169661E-06
PARAMETER NO 43 CAUSES A CHANGE IN OUTPUT VARIABLE NO 21 =  0.585657E-07
PARAMETER NO 44 CAUSES A CHANGE IN OUTPUT VARIABLE NO 21 =  0.581397E-07
PARAMETER NO 45 CAUSES A CHANGE IN OUTPUT VARIABLE NO 21 =  0.100583E-05
PARAMETER NO 46 CAUSES A CHANGE IN OUTPUT VARIABLE NO 21 =  0.118693E-05
PARAMETER NO 47 CAUSES A CHANGE IN OUTPUT VARIABLE NO 21 =  0.393846E-09
PARAMETER NO 48 CAUSES A CHANGE IN OUTPUT VARIABLE NO 21 = -0.
PARAMETER NO 49 CAUSES A CHANGE IN OUTPUT VARIABLE NO 21 =  0.
PARAMETER NO 50 CAUSES A CHANGE IN OUTPUT VARIABLE NO 21 =  0.
PARAMETER NO 51 CAUSES A CHANGE IN OUTPUT VARIABLE NO 21 =  0.
PARAMETER NO 52 CAUSES A CHANGE IN OUTPUT VARIABLE NO 21 =  0.
PARAMETER NO 53 CAUSES A CHANGE IN OUTPUT VARIABLE NO 21 =  0.
PARAMETER NO 54 CAUSES A CHANGE IN OUTPUT VARIABLE NO 21 =  0.
PARAMETER NO 55 CAUSES A CHANGE IN OUTPUT VARIABLE NO 21 =  0.
PARAMETER NO 56 CAUSES A CHANGE IN OUTPUT VARIABLE NO 21 =  0.
PARAMETER NO 57 CAUSES A CHANGE IN OUTPUT VARIABLE NO 21 = -0.
PARAMETER NO 58 CAUSES A CHANGE IN OUTPUT VARIABLE NO 21 = -0.
PARAMETER NO 59 CAUSES A CHANGE IN OUTPUT VARIABLE NO 21 = -0.
PARAMETER NO 60 CAUSES A CHANGE IN OUTPUT VARIABLE NO 21 = -0.
PARAMETER NO 61 CAUSES A CHANGE IN OUTPUT VARIABLE NO 21 = -0.
PARAMETER NO 62 CAUSES A CHANGE IN OUTPUT VARIABLE NO 21 = -0.
PARAMETER NO 63 CAUSES A CHANGE IN OUTPUT VARIABLE NO 21 = -0.
PARAMETER NO 64 CAUSES A CHANGE IN OUTPUT VARIABLE NO 21 = -0.
PARAMETER NO 65 CAUSES A CHANGE IN OUTPUT VARIABLE NO 21 = -0.477271E-06
PARAMETER NO 66 CAUSES A CHANGE IN OUTPUT VARIABLE NO 21 = -0.160889E-05
PARAMETER NO 67 CAUSES A CHANGE IN OUTPUT VARIABLE NO 21 = -0.196666E-06
PARAMETER NO 68 CAUSES A CHANGE IN OUTPUT VARIABLE NO 21 = -0.551620E-06
PARAMETER NO 69 CAUSES A CHANGE IN OUTPUT VARIABLE NO 21 = -0.226029E-05
PARAMETER NO 70 CAUSES A CHANGE IN OUTPUT VARIABLE NO 21 = -0.112659E-04
PARAMETER NO 71 CAUSES A CHANGE IN OUTPUT VARIABLE NO 21 = -0.651358E-09
PARAMETER NO 72 CAUSES A CHANGE IN OUTPUT VARIABLE NO 21 = -0.
PARAMETER NO 73 CAUSES A CHANGE IN OUTPUT VARIABLE NO 21 =  0.276072E-06
PARAMETER NO 74 CAUSES A CHANGE IN OUTPUT VARIABLE NO 21 = -0.132740E-07

TOTAL CHANGE IN OUTPUT VARIABLE NO 21= -0.108291E-04
```

Figure 84. Change in IL1 Due to Individual Input Parameters (at 50 C) (Cont)

SOLUTIONS OF OUTPUT VARIABLES AT TEMPERATURE = 50.00 DEGREES

NOMINAL MATRIX

0.52693E-02	-0.19472E-03	0.	0.	0.	0.
0.	0.	0.	0.	0.	0.
0.	0.	0.	0.	0.	-0.99502E-04
0.	-0.19472E-03	0.61777E-03	-0.28131E-03	0.	0.
0.	0.	0.	0.	0.	0.
0.	0.	0.	0.	0.	0.
0.	0.	0.	-0.95129E-02	0.97076E-02	0.
0.	0.	0.	0.	0.	0.
0.	0.	0.	0.	0.	0.
0.	0.	0.	0.	0.92316E-02	-0.92316E-02
0.31280E-03	-0.28131E-03	0.	0.	0.	0.
0.	0.	0.	0.	0.	0.
0.	0.	0.	0.	0.	0.
0.	-0.95129E-02	0.99166E-02	-0.19472E-03	0.	0.
0.	0.	0.	0.	0.	0.
0.	0.	0.	0.	-0.99502E-04	0.
0.	0.	0.	-0.19472E-03	0.61777E-03	-0.28131E-03
0.	0.	0.	0.	0.	0.
0.	0.	0.	0.	0.	0.
0.	0.	0.	0.	0.	-0.95129E-02
0.97076E-02	0.	0.	0.	0.	0.
0.	0.	0.	0.	0.	0.
0.	0.	0.	0.	0.	0.
0.92316E-02	-0.92316E-02	0.31280E-03	-0.28131E-03	0.	0.
0.	0.	0.	0.	0.	0.
0.	0.	0.	0.	0.	0.
0.	0.	0.	-0.95129E-02	0.99166E-02	-0.19472E-03
0.	0.	0.	0.	0.	0.
0.	-0.99502E-04	0.	0.	0.	0.
0.	0.	0.	0.	0.	-0.19472E-03
0.31663E-02	-0.28131E-03	0.	0.	0.	0.
0.	0.	0.	0.	0.	0.
0.	0.	0.	0.	0.	0.
0.	-0.95129E-02	0.97274E-02	0.	0.	0.
0.	0.	0.	0.	0.	0.
0.	0.	0.	0.	0.	0.
0.	0.	0.92316E-02	-0.92316E-02	0.31280E-03	-0.28131E-03
0.	0.	0.	0.	0.	0.
0.	0.	0.	0.	0.	0.
0.	0.	0.	0.	0.	-0.95129E-02

Figure 85. Matrix Equations and Selections (at 50 C)

0.99166E-02	-0.19472E-03	0.	0.	0.	0.
-0.99502E-04	0.	0.	0.	0.	0.
0.	0.	0.	0.	0.	0.
0.	-0.19472E-03	0.17122E-01	-0.28131E-03	0.	0.
0.	0.	0.	0.	0.	0.
0.	0.	0.	0.	0.	0.
0.	0.	0.	-0.95129E-02	0.97274E-02	0.
0.	0.	0.	0.	0.	0.
0.	0.	0.	0.	0.	0.
0.	0.	0.	0.	0.92316E-02	-0.92316E-02
0.31280E-03	-0.28131E-03	0.	0.	0.	0.
0.	0.	0.	0.	0.	0.
0.	0.	0.	0.	0.	0.
0.	-0.95129E-02	0.96224E-02	0.	0.	-0.99502E-04
0.	0.	0.	0.	0.	0.
0.	-0.99502E-04	0.	0.	0.	0.
0.	0.	0.	0.	0.10149E-01	0.
0.	0.	0.	0.	-0.99502E-04	0.
0.	0.	0.	0.	0.	0.
-0.99502E-04	0.	0.	0.	0.	0.
0.10149E-01	0.49751E-03	0.	0.	0.	0.
0.	0.	0.	0.	0.15515E-02	0.
0.	0.	-0.10804E-01	0.	0.	0.
0.	0.				

NOMINAL SOLUTIONS FOR OUTPUT VARIABLES

0.96590E-01	0.54978E-01	0.53876E-01	-0.25732E-00	-0.24993E-00	-0.14226E-00
-0.13940E-00	0.68882E 00	0.67229E 00	0.58192E 00	0.56910E 00	-0.28466E 01
-0.27442E 01	-0.67302E 00	-0.65818E 00	0.39486E 01	0.39037E 01	0.75380E-02
-0.29354E-01	0.75005E-04	-0.29208E-03	0.39037E 01		

Figure 86. Matrix Equations and Selections (at 50 C) (Cont)

```
TOTAL CHANGE IN OUTPUT VARIABLES BETWEEN 25 DEGREES AND 50.00 DEGREES
     OUTPUT VARIABLE NO  1 HAS A CHANGE OF -0.140443E-04
     OUTPUT VARIABLE NO  2 HAS A CHANGE OF -0.557963E-03
     OUTPUT VARIABLE NO  3 HAS A CHANGE OF -0.576774E-03
     OUTPUT VARIABLE NO  4 HAS A CHANGE OF -0.706475E-02
     OUTPUT VARIABLE NO  5 HAS A CHANGE OF -0.666696E-02
     OUTPUT VARIABLE NO  6 HAS A CHANGE OF -0.240988E-02
     OUTPUT VARIABLE NO  7 HAS A CHANGE OF -0.228599E-02
     OUTPUT VARIABLE NO  8 HAS A CHANGE OF  0.365271E-01
     OUTPUT VARIABLE NO  9 HAS A CHANGE OF  0.355227E-01
     OUTPUT VARIABLE NO 10 HAS A CHANGE OF  0.458297E-01
     OUTPUT VARIABLE NO 11 HAS A CHANGE OF  0.445017E-01
     OUTPUT VARIABLE NO 12 HAS A CHANGE OF -0.332237E-00
     OUTPUT VARIABLE NO 13 HAS A CHANGE OF -0.317168E-00
     OUTPUT VARIABLE NO 14 HAS A CHANGE OF -0.401977E-01
     OUTPUT VARIABLE NO 15 HAS A CHANGE OF -0.389365E-01
     OUTPUT VARIABLE NO 16 HAS A CHANGE OF  0.308286E-00
     OUTPUT VARIABLE NO 17 HAS A CHANGE OF  0.303654E-00
     OUTPUT VARIABLE NO 18 HAS A CHANGE OF  0.348124E-03
     OUTPUT VARIABLE NO 19 HAS A CHANGE OF -0.317485E-02
     OUTPUT VARIABLE NO 20 HAS A CHANGE OF  0.310621E-05
     OUTPUT VARIABLE NO 21 HAS A CHANGE OF -0.302881E-04
     OUTPUT VARIABLE NO 22 HAS A CHANGE OF  0.303654E-00
```

Figure 87. Matrix Equations and Selections (at 50 C) (Cont)

VIII. SUMMARY OF CONCLUSIONS

The Log Compression Amplifier circuit was analyzed by several different computer techniques. Each of these showed consistent results. The detailed results of the analysis are discussed in the foregoing. In general, the circuit performs well under nominal conditions. The fluctuations in the output currents due to parameter tolerances and environmental changes are quite large if the extreme worst case conditions are assumed. It is recognized that these extreme conditions are not necessarily realistic assumptions. However, the extreme conditions do provide a bound on the output variables.

The design criteria for the circuit was not known and it is not possible to determine whether changes in the output currents lie within the design limits. The significant advantage of the computer techniques employed is that they pin point the parameters that have the greatest effect on the output variables. That is, they provide a means of determining how sensitive the currents are to changes in specific component parameters.

Throughout each of the analyses, the ac gain of the transistors (h_{fe}) was the most significant parameter in affecting the output currents. If it is desirable to maintain a more stringent bounds on the output currents, a transistor with tighter tolerance on the h_{fe} should be selected.

DC analysis indicated that the transistor bias was satisfactory even under extreme conditions.

APPENDIX I

1. MANDEX WORST-CASE ANALYSIS

This paper explains the Modified AND EXpanded (MANDEX) Worst-case Circuit Analysis Computer Program which utilizes a digital computer capable of determining the effects of variation in circuit input and part parameter on circuit performance. In the MANDEX method, the computer calculates the first derivative of all output variables with respect to the input parameters and, using these derivatives, sets the input parameters to their end-of-life condition so that a worst-case solution for the output variable is obtained. The computer determines whether performance is acceptable at this worst-case condition, and prints circuit information accordingly. This procedure is repeated for all output variables. In addition to determining whether or not a circuit design will meet worst-case criteria, the program provides the designer with information to aid in improving the design.

To perform this analysis, it is necessary that a mathematical model, which may be programed, be derived from this circuit. The value of the part parameters and their end-of-life limits, the mathematical equations describing the circuit output variables, and failure criteria must also be programed into the computer.

1.1 Definitions

Before proceeding with the explanation of the analysis technique it is necessary to define several terms in order to prevent confusion in the discussion. These definitions are as follows:

Input Parameter - A representation of an input signal to a circuit and/or a representation of a particular electrical characteristic of a component part; i.e., R_{cx} = transistor saturation resistance; V_{in} = input signal.

Output Variable - Any circuit function or stress dependent upon the values of the input parameters; i.e., V_{out} = output signal; P_c = transistor collector dissipation.

Partial - The ratio of the change in an output variable to the change in an input parameter.

1.2 Input Requirements

There are three basic inputs to the program: (1) the MANDEX Method Logic Program, (2) the input data, and (3) the equivalent circuit subroutine.

The input data consist of three sections. The first contains necessary input parameter information; i. e., the nominal value and the upper and lower end-of-life drift percentages of the input parameters. The second section lists the output variable requirements against which the output variable will be compared. These requirements reflect the proper application of both circuit and parts. The third section, which is optional, is a list of actual measurements of the output variables from the breadboard.

The circuit subroutine contains the equivalent circuit, equivalent circuit failure criteria, and output variable formulas. The equivalent circuit includes the inputs and outputs of the circuit, considering load impedance, input signal, and input generator impedance. The nodal method of writing circuit equations is generally used, although the loop-current method can be used equally well. However, the method that describes the circuit in the least number of equations will achieve a saving in computer time later in the analysis. The circuit equations should be verified by experimental data.

The measurements and solutions to the circuit equations should be compared, and the results of each must be compatible. If any discrepancies exist between the two, it will be necessary to alter the equivalent circuit to more accurately represent the physical circuit.

To determine if the equivalent circuit is functioning properly, circuit failure criteria must be written in terms of the equivalent circuit's parameters and the solutions to the circuit equations. These criteria can be developed for any part in the circuit that has two or more stable states. If the circuit is successful with a part in either state, then special logic is incorporated into the computer program to change the matrix to represent this part in its alternate state. This logic will be used only if the criteria indicate that the part has changed its mode of operation. As an example, consider the case in which a diode is operating above the knee of its characteristic curve. The dynamic impedance at that point will be relatively small as compared to the impedance below the knee. It is obvious then that the same

equivalent circuit will not suffice for both cases. Therefore, a test of the voltage across the diode must be made to determine if the proper equivalent has been used. If the test shows that the voltage is correct, the program may continue. If not, a new equivalent circuit must be used.

Output variables are a straightforward computation of items of interest, such as stress functions, output voltages, etc. It is these output variables which, when compared against their requirements, will determine if the circuit has passed the worst-case conditions.

1.3 Program Operation

An abbreviated flow chart of the MANDEX Program is given in Figure 1. The computer program will read in all input information and print this information which the analyst may use as a check. It will then solve the circuit equations with all input parameters at their nominal value. If an equivalent circuit failure (as indicated by a misrepresentation of the mode of operation of a part) or an actual circuit failure (as indicated by an output variable exceeding its limit) is experienced, the computer will stop. If not, it will proceed to calculate the partials of all output variables with respect to all of the input parameters. This is done by varying the input parameters above and below their mean values and making the appropriate substitutions in an eight-point central derivative formula. Next, the circuit equations are solved with each parameter sequentially at its end-of-life values. These are called the "one-at-a-time" solutions. The use of these solutions will be discussed.

The computer sequentially tests the worst-case conditions of all output variables after these preliminary computations are completed. If an output requirement states that a certain output variable must remain below a given value, the computer will set all input parameters with positive partials at their maximum end-of-life values, and all parameters with negative partials at their minimum end-of-life values, thus obtaining the worst possible case for the output variable. The value of the output variable obtained from these conditions is compared with its requirement. If it is within the requirement, the circuit is considered successful at that point and the next output variable is investigated. If the value exceeds the requirements, the circuit is considered to have failed. In either case, the information surrounding each output variable is printed out. If a minimum output is required, the computer will then set up the worst-case condition by setting the input parameters to their end-of-life value opposite the sign of their partial, and proceed as

before. It will then analyze the next output variable, and continue to do so until all output variables have been investigated. The computer will now print the results of the one-at-a-time, end-of-life solutions, and a summary sheet gathered from all the worst-case solutions.

Although the program results in a large volume of useful information concerning the circuit, the computer time for a "typical" circuit (a circuit which requires about 20 simultaneous equations to describe its operation) is approximately 3 to 4 minutes on the IBM 7094 computer.

2. OUTPUT INFORMATION

Perhaps the best method of illustrating the value of the MANEX Worst-case Circuit Analysis Computer Program would be to explain the various sections of the computer printout and then explain the use of the results.

2.1 Input Parameter Data

The first sheet that appears in the printout, "Input Parameter Data", is illustrated in Figure 2. The title of the circuit being analyzed appears on the sheet. As can be seen, this example was a power supply regulator. After the circuit title, the number of input parameters and output variables appears. The remainder of the sheet is devoted to a description of all input parameters. This description contains the input parameter symbols, the number assigned to each for the purpose of analysis, the nominal or design center value, and the end-of-life allowable values and percentages. For the illustration, the end-of-life period was three years, hence the designation "+3 or -3-year pt." In the example analysis, there were 46 input parameters; however, only 30 are listed due to space limitations.

2.2 Output Variable Test Information

Figure 3, "Output Variable Test Information," lists the symbols and numbers assigned to each output variable. In addition, it lists the maximum and/or minimum values against which the MANDEX worst-case solutions are tested, and information as to whether the output variables are tested for maximum or minimum values, or both.

Figures 2 and 3 are primarily printouts of information supplied to the computer. In addition to providing reference information, they serve as checks to see that the computer has received the correct information.

2.3 Nominal Solutions

The nominal matrix, its solutions, and the nominal solutions of the output variables are presented next. Figure 4 is an example of this information. The nominal matrix is listed row-wise in floating-point notation with six elements per line.

Thus a 4 x 4 matrix

H (1, 1)	H (1, 2)	H (1, 3)	H (1, 4)	T (1)
H (2, 1)	H (2, 2)	H (2, 3)	H (2, 4)	T (2)
H (3, 1)	H (3, 2)	H (3, 3)	H (3, 4)	T (3)
H (4, 1)	H (4, 2)	H (4, 3)	H (4, 4)	T (4)

would usually be programed to be listed

H (1, 1)	H (1, 2)	H (1, 3)	H (1, 4)	H (2, 1)	H (2, 2)
H (2, 3)	H (2, 4)	H (3,1)	H (3, 2)	H (3, 3)	H (3, 4)
H (4, 1)	H (4, 2)	H (4, 3)	H (4, 4)	T (1)	T (2)
T (3)	T (4)				

The nominal matrix solutions and the nominal solutions for the output variables follow the matrix listing.

2.4 Detailed MANDEX Results

Figure 5 shows an example of the "Detailed MANDEX Results" section of a MANDEX analysis. This information is obtained for each case in which an output variable is tested for worst-case maximum or worst-case minimum value. For instance, in the example analysis there were 12 output variables tested for both maximum and minimum value, and 19 output variables tested for maximum value. Therefore, there were 43 subsections (similar to Figure 5) in the "Detailed MANDEX Results" section of the example analysis.

In this example, the output variable V10 was tested for the maximum (i.e., most positive) worst-case value. As can be seen in the first part of Figure 5, the allowed maximum value was -24.5 volts, and the solution value was -23.833 volts, hence the solution value

failed the worst-case requirement by 0.6673 volts. Next, under equivalent circuit check (EQU CKT CHECK), a zero is printed. This means that all of the equivalent circuit success criteria that were written into the circuit subroutine to check the validity of the equivalent circuit were met.

The next item is a check on the logic state of the matrix when the output variable is tested for worst case. In most cases a "1" will be printed out, indicating the matrix was in the normal state. If, however, a change of matrix state is necessary, such as to allow for a change of polarity on a diode, and this special logic has been written into the circuit subroutine, a number code would be printed out to indicate this special state.

The next part of this section gives details on output variable-input parameter relationships. Listed in columns 3 and 4 are the nominal values of the input parameters and the end-of-life values at which the input parameters were set to give a worst-case solution of the particular output variable (V10 in this example). Column 5 lists the partial derivatives of the output variable with respect to each of the input parameters. Next are listed the changes in the output variable from nominal, i.e., when each input parameter is moved from its nominal value to its end-of-life point, while the other input parameters are held at their nominal values. Summing these changes, of the same sign, and calculating percent changes produces column 7.

The "Percent Changes" column gives a good indication as to what input parameters are important to the variation of the output variable being tested for worst-case. Ideally, the values in the "Percent Changes" column would all be of the same sign: plus, (+), when testing for a maximum value worst-case solution, and minus, (-), when testing for a minimum value worst-case solution. However, because a point of inflection or zero slope may occur in the input-output curve, there can be cases in which setting the input parameter in the direction indicated by the sign of the partial may produce a change in the output opposite to that desired. For example, in Figure 5, parameters R3, R7, and R12 are set so that they tend to decrease V10 instead of increase it. It can be seen, however, that the total contribution of the three parameters to V10 is insignificant (-3×10^{-6} volts). Experience with MANDEX has shown that in every case in which an input parameter was set to produce the wrong change in the output variable, the error in the result was negligible.

If the partial of an output variable with respect to an input parameter is a constant over the range of variation of the input parameter, the partial computed about the nominal value of the input parameter (or any other value of the input parameter within its range of variation), times the change of the input parameter, is equal to the change in the output variable due to changing the input parameter. If the variation of the output variable with respect to an input parameter is linear, the partial of the output variable with respect to the input parameter is a constant. Therefore, the linearity of the input-output relationship can be investigated by comparing the partial times the input parameter change with the difference between the output variable solution when the input parameter is at nominal and the output variable solution when the input parameter is at its end-of-life value. The column entitled "Linearity Check" presents this comparison.

The last column, "EQ CKT TEST," provides a check to show if the equivalent circuit success criteria are met when each of the input parameters is varied to its three-year end point.

An area of uncertainty that exists in the MANDEX analysis technique concerns the effects that interrelationships of the input parameters may have on the output variables. For instance, if these effects were not present, the sum of the output changes from nominal when the input parameters are varied one at a time to their three-year end points would equal the difference between the output variable solution with all input parameters at their three-year end points, and the output variable solution with all input parameters at their nominal values. To provide an indication of the effects of interrelationships of the input parameters on the output variable, the above comparison is made. As shown in Figure 5, the sum of the "Output Change from Nominal" column (1.206) and the worst-case solution of the output variable minus the nominal solution of the output variable (1.154) are given for comparison. Also given is the sum of the "Partial Times Input Change" column (1.248). If the variations of the output variable with respect to all the input parameters were linear and there were no interrelationships of the input parameters, the three values would be equal. In practice, these quantities are probably never exactly equal. At the present state of development of MANDEX, engineering judgment must be used to evaluate the above effects. These effects were not considered to be a problem in the example given.

The last item in the "Detailed MANDEX Results" section is a list of the solutions of all output variables when one particular output variable is tested for a worst-case solution. The solutions are listed across the page in the standard floating-point notation.

2.5 One-at-a-time Solutions

As was indicated in a preceding section, solutions of the output variables are obtained for one-at-a-time variation of the input parameters. That is, the first input parameter is set at its maximum value, while all other input parameters are set at their nominal values and the solutions of the output variables are calculated. Next, the input parameter is set at its minimum value and solutions of the output variables are calculated. The computer follows the same procedure for the second, third, etc, until all input parameters have been varied. Figure 6 is an example of the printout of the one-at-a-time solutions of the output variables. The solutions of the output variables are listed in standard floating-point notation in order across the page.

2.6 Summary

Since the MANDEX Analysis Program results in a large volume of information, a section summarizing the MANDEX analysis was made part of the program. This summary is designed to be attached to the report to the Design Review Board describing the MANDEX analysis of the design.

The summary consists of three parts: (1) circuit description and a listing of the input parameters and their variations allowed, (2) the MANDEX results, which contain a listing of the output variables; the limits against which solutions for these output variables were tested; the worst-case solutions for these output variables; an indication if the requirement was not met; an indication if the equivalent circuit was not valid; and the index numbers of input parameters which contribute more than 20 percent of the variation in a particular output variable; and (3) a comparison of the nominal solutions of the output variables with measured breadboard values.

The first part of the summary is a repetition of Section 1 of the MANDEX analysis and is illustrated in Figure 2. Figure 7 is an example of the "MANDEX Results" part of the summary. The "MANDEX Results" page summarizes the "Detailed MANDEX Results" section of the analysis. As stated above, the maximum and/or minimum values of the output variables that were tested for worst-case maximum or worst-case minimum are listed on the "MANDEX Results" page.

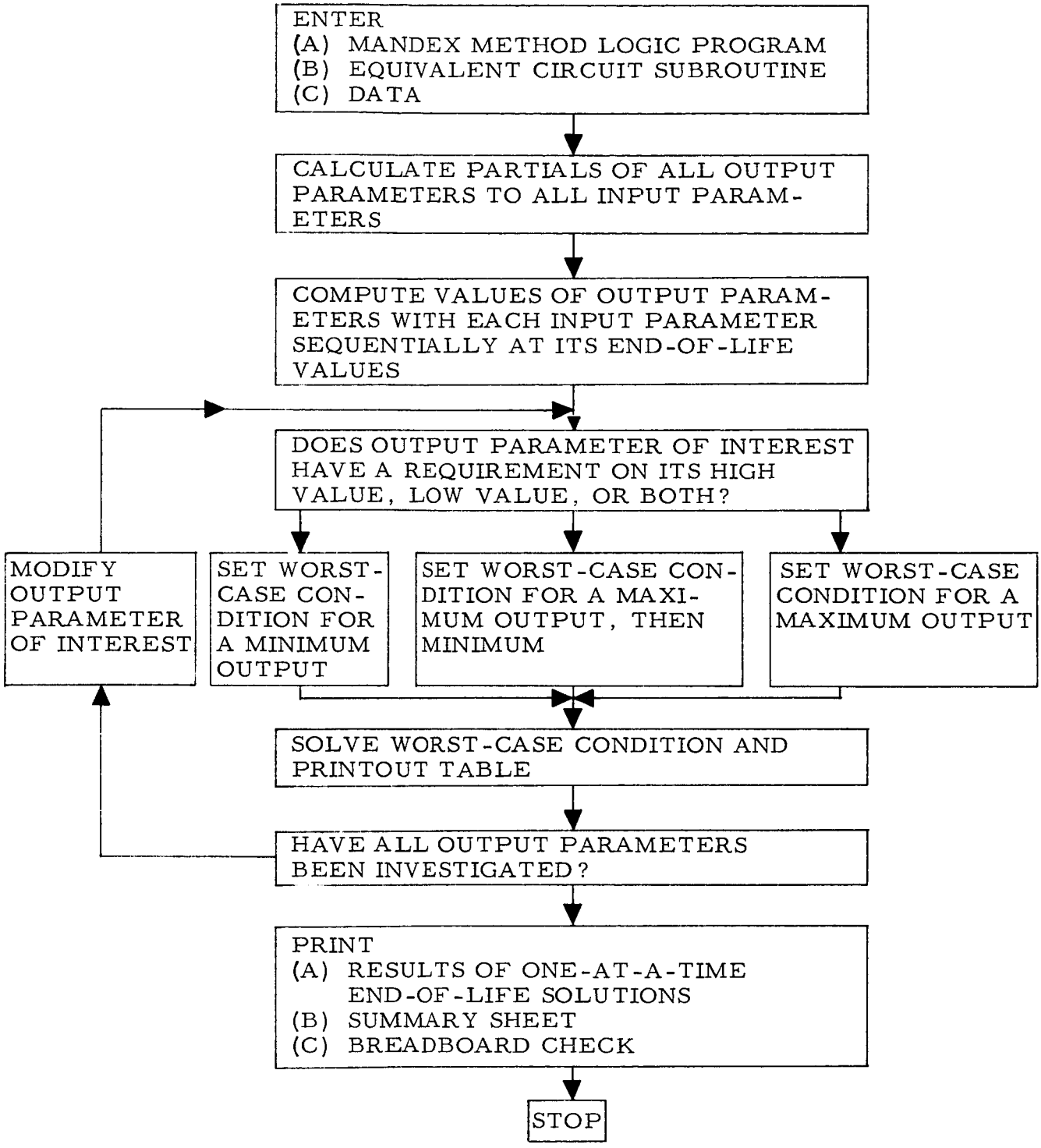

Figure 1. MANDEX Method Flow Chart

MANDEX WORST CASE

INPUT PARAMETER DATA

POWER SUPPLY REGULATOR CASE 1

NUMBER OF INPUT PARAMETERS = 46 NUMBER OF OUTPUT VARIABLES = 31

THE VALUE OF THE STEP SIZE USED IN THE PARTIAL ROUTINE IS 1.000 PERCENT

		NUMERICAL VALUE			PERCENT CHANGE	
SYMBOL	NUMBER	NOMINAL	+3 YEAR PT.	-3 YEAR PT.	+3 YEAR PT.	-3 YEAR PT.
R1	1	0.22000E 04	0.22660E 04	0.20680E 04	3.0000	6.0000
R2	2	0.30000E 04	0.30900E 04	0.28200E 04	3.0000	6.0000
R3	3	0.13000E 05	0.13390E 05	0.12220E 05	3.0000	6.0000
R4	4	0.30000E-00	0.30900E-00	0.28200E-00	3.0000	6.0000
R5	5	0.30000E-00	0.30900E-00	0.28200E-00	3.0000	6.0000
R6	6	0.80000E 00	0.82400E 00	0.75200E 00	3.0000	6.0000
R7	7	0.22000E 04	0.22660E 04	0.20680E 04	3.0000	6.0000
R8	8	0.15000E 04	0.15450E 04	0.14100E 04	3.0000	6.0000
R9	9	0.13000E 04	0.13390E 04	0.12220E 04	3.0000	6.0000
R10	10	0.24000E-00	0.24720E-00	0.22560E-00	3.0000	6.0000
R11	11	0.47000E 04	0.48410E 04	0.44180E 04	3.0000	6.0000
R12	12	0.22000E 03	0.22660E 03	0.20680E 03	3.0000	6.0000
R13	13	0.17920E 04	0.17942E 04	0.17898E 04	0.1200	0.1200
R14	14	0.51500E 03	0.51562E 03	0.51438E 03	0.1200	0.1200
R15	15	0.20000E 03	0.20100E 03	0.19900E 03	0.5000	0.5000
R16	16	0.47000E 04	0.48410E 04	0.44180E 04	3.0000	6.0000
RL	17	0.58500E 01	0.76050E 01	0.46800E 01	30.0000	20.0000
VPS	18	0.32700E 02	0.34400E 02	0.31000E 02	5.2000	5.2000
VAX	19	0.39900E 02	0.42400E 02	0.37400E 02	6.2660	6.2660
RZ1	20	0.20000E 08	0.20000E 08	0.50000E 07	0.	75.0000
VZ2	21	0.12000E 02	0.12096E 02	0.11904E 02	0.8000	0.8000
VF3	22	0.64000E 00	0.96000E 00	0.57600E 00	50.0000	10.0000
VZ4	23	0.62000E 01	0.63000E 01	0.61000E 01	1.6130	1.6130
HFE1	24	0.60000E 02	0.75000E 02	0.45000E 02	25.0000	25.0000
HOE1	25	0.24000E-01	0.30000E-01	0.18000E-01	25.0000	25.0000
HIE1	26	0.44000E 01	0.55000E 01	0.33000E 01	25.0000	25.0000
VBE1	27	0.30000E-00	0.36000E-00	0.24000E-00	20.0000	20.0000
HFE2	28	0.60000E 02	0.75000E 02	0.45000E 02	25.0000	25.0000
HOE2	29	0.24000E-01	0.30000E-01	0.18000E-01	25.0000	25.0000
HIE2	30	0.44000E 01	0.55000E 01	0.33000E 01	25.0000	25.0000

Figure 2. Input Parameter Data

OUTPUT VARIABLE TEST INFORMATION

POWER SUPPLY REGULATOR CASE 1

SYMBOL	NUMBER	MAX TEST VALUE	MIN TEST VALUE	TEST
V1	1	-0.	-0.	BOTH
V2	2	-0.	-0.	BOTH
V3	3	-0.	-0.	BOTH
V4	4	-0.	-0.	BOTH
V5	5	-0.	-0.	BOTH
V6	6	-0.	-0.	BOTH
V7	7	-0.	-0.	BOTH
V8	8	-0.	-0.	BOTH
V9	9	-0.	-0.	BOTH
V10	10	-0.24500E 02	-0.25500E 02	BOTH
PR2	11	0.33300E-00	0.	MAX
PR7	12	0.10000E 01	0.	MAX
PR1	13	0.50000E 01	0.	MAX
PR16	14	0.33300E-00	0.	MAX
VEC1	15	0.40000E 02	0.	MAX
VEC2	16	0.40000E 02	0.	MAX
VEC3	17	0.40000E 02	0.	MAX
VCE4	18	0.50000E 02	0.	MAX
VCE5	19	0.20000E 02	0.	MAX
VCE6	20	0.10000E 02	0.	MAX
IC1	21	0.15000E 02	0.	MAX
IC2	22	0.15000E 02	0.	MAX
IC3	23	0.15000E 02	0.	MAX
IC4	24	0.20000E-00	-0.	MAX
IC5	25	0.15000E-01	-0.	MAX
ICR4	26	0.15000E-01	0.50000E-02	BOTH
PQ1	27	0.19000E 02	0.	MAX
PQ3	28	0.19000E 02	0.	MAX
PQ4	29	0.25000E-00	0.	MAX
PQ5	30	0.55000E-01	0.	MAX
ICR2	31	0.27500E-01	0.50000E-02	BOTH

Figure 3. Output Variable Test Information

NOMINAL MATRIX

0.17221E 02	0.	-0.22727E-00	-0.13660E 02	0.	0.
0.	0.	0.	-0.33333E 01	0.	0.17221E 02
-0.22727E-00	-0.13660E 02	0.	0.	0.	0.
0.	-0.33333E 01	-0.13864E 02	-0.13864E 02	0.15592E 02	0.13612E 02
-0.22727E-00	0.	0.	0.	0.	-0.12500E 01
-0.24000E-01	-0.24000E-01	-0.24000E-01	0.43731E 01	-0.12587E-00	-0.45455E-02
-0.35470E-02	0.	0.	0.	0.	0.
-0.13864E 02	0.13635E 02	0.22848E-00	0.	0.	0.
0.	-0.50000E-07	0.	0.	0.	-0.45455E-02
0.	0.48352E-02	-0.40000E-07	0.	0.	-0.28969E-03
0.	0.	0.	-0.12855E-00	0.12500E-00	-0.40000E-07
0.42137E-02	-0.66667E-03	0.	0.	0.	0.
0.	0.	0.	0.	-0.66667E-03	0.71067E-03
0.	-0.44000E-04	0.	0.	0.	0.
0.	0.	0.	0.38889E-01	0.30677E-02	-0.41399E-01
-0.33333E 01	-0.33333E 01	-0.12500E 01	0.	-0.50000E-07	-0.28969E-03
0.	-0.38933E-01	-0.25097E-02	0.81296E 01	0.11316E 03	0.11316E 03
0.44898E 02	-0.12407E 02	0.79427E-01	0.25205E-02	0.12695E-01	0.26511E-00
0.75667E-02	-0.25914E 03				

MATRIX SOLUTIONS

0.72331E 01	0.72331E 01	0.68285E 01	0.10358E 01	0.64553E 01	-0.19763E-02
0.22948E 01	-0.10050E 02	-0.17975E 02	-0.24987E 02		

NOMINAL SOLUTIONS FOR OUTPUT VARIABLES

0.72331E 01	0.72331E 01	0.68285E 01	0.10358E 01	0.64553E 01	-0.19763E-02
0.22948E 01	-0.10050E 02	-0.17975E 02	-0.24987E 02	0.37285E-00	0.31259E-00
0.44705E 01	0.13282E-00	0.61973E 01	0.61973E 01	0.57926E 01	0.47795E 01
0.87373E 01	0.22948E 01	0.15762E 01	0.15762E 01	0.11368E 01	0.27778E-01
0.82296E-02	0.12451E-01	0.97682E 01	0.65850E 01	0.13276E-00	0.71904E-01
0.31654E-02					

Figure 4. Nominal Matrix and Solution

INFORMATION FOR OUTPUT VARIABLE NO 10 - V10- TESTED FOR WORST CASE MAX

MAX TEST VALUE	SOLUTION VALUE	DIFFERENCE	EQU CKT CHECK	LOGIC STATE
-0.24500E 02	-0.23833E 02	0.6673E 00	0.	1

WORST CASE REQUIREMENT FAILED

SYM.	INPUT PARAMETERS NO.	NOMINAL	3 YEAR PT.	PARTIAL	OUTPUT CHANGE FROM NOMINAL	PERCENT CHANGES	PARTIAL TIMES INPUT CHANGE	LINEARITY CHECK	EQ CKT TEST
R1	1	0.2200E 04	0.2200E 04	-0.	0.	0.	-0.	0.	0.
R2	2	0.3000E 04	0.2820E 04	-0.1582E-04	0.3030E-02	0.251	0.2847E-02	0.183E-03	0.
R3	3	0.1300E 05	0.1339E 05	0.2439E-08	-0.7153E-06	-23.077	0.9511E-06	-0.167E-05	0.
R4	4	0.3000E-00	0.3090E-00	0.6085E-01	0.5357E-03	0.044	0.5477E-03	-0.119E-04	0.
R5	5	0.3000E-00	0.3090E-00	0.6087E-01	0.5350E-03	0.044	0.5478E-03	-0.128E-04	0.
R6	6	0.8000E 00	0.7520E 00	-0.7605E-01	0.3828E-02	0.317	0.3650E-02	0.178E-03	0.
R7	7	0.2200E 04	0.2266E 04	0.2871E-07	-0.9537E-06	-30.769	0.1895E-05	-0.285E-05	0.
R8	8	0.1500E 04	0.1410E 04	-0.5045E-04	0.4532E-02	0.376	0.4541E-02	-0.878E-05	0.
R9	9	0.1300E 04	0.1339E 04	0.9982E-03	0.3780E-01	3.134	0.3893E-01	-0.113E-02	0.
R10	10	0.2400E-00	0.2472E-00	0.5011E-01	0.3622E-03	0.030	0.3608E-03	0.134E-05	0.
R11	11	0.4700E 04	0.4418E 04	-0.3430E-07	0.6199E-05	0.001	0.9671E-05	-0.347E-05	0.
R12	12	0.2200E 03	0.2266E 03	0.5419E-06	-0.1431E-05	-46.154	0.3576E-05	-0.501E-05	0.
R13	13	0.1792E 04	0.1790E 04	-0.9868E-02	0.2122E-01	1.760	0.2122E-01	-0.152E-06	0.
R14	14	0.5150E 03	0.5156E 03	0.2418E-01	0.1493E-01	1.238	0.1494E-01	-0.135E-04	0.
R15	15	0.2000E 03	0.2010E 03	0.2418E-01	0.2415E-01	2.002	0.2418E-01	-0.352E-04	0.
R16	16	0.4700E 04	0.4418E 04	-0.6867E-07	0.7391E-05	0.001	0.1936E-04	-0.120E-04	0.
RL	17	0.5850E 01	0.4680E 01	-0.1313E-01	0.1923E-01	1.594	0.1536E-01	0.387E-02	0.
VPS	18	0.3270E 02	0.3100E 02	-0.6988E-02	0.1189E-01	0.986	0.1188E-01	0.997E-05	0.
VAX	19	0.3990E 02	0.4240E 02	0.1418E-02	0.3552E-02	0.295	0.3544E-02	0.802E-05	0.
RZ1	20	0.2000E 08	0.2000E 08	-0.	0.	0.	-0.	0.	0.
VZ2	21	0.1200E 02	0.1190E 02	-0.1140E-00	0.1095E-01	0.908	0.1095E-01	0.900E-07	0.
VF3	22	0.6400E 00	0.9600E 00	0.9806E-02	0.3146E-02	0.261	0.3138E-02	0.824E-05	0.
VZ4	23	0.6200E 01	0.6100E 01	-0.3456E 01	0.3456E-00	28.654	0.3456E 00	-0.189E-05	0.
HFE1	24	0.6000E 02	0.4500E 02	-0.9303E-04	0.1761E-02	0.146	0.1395E-02	0.366E-03	0.
HOE1	25	0.2400E-01	0.1800E-01	-0.1795E-01	0.1426E-03	0.012	0.1077E-03	0.349E-04	0.
HIE1	26	0.4400E 01	0.5500E 01	0.9204E-03	0.9577E-03	0.079	0.1012E-02	-0.547E-04	0.
VBE1	27	0.3000E-00	0.3600E-00	0.3824E-01	0.2264E-02	0.188	0.2295E-02	-0.307E-04	0.
HFE2	28	0.6000E 02	0.4500E 02	-0.9380E-04	0.1761E-02	0.146	0.1407E-02	0.354E-03	0.
HOE2	29	0.2400E-01	0.1800E-01	-0.2072E-01	0.1414E-03	0.012	0.1243E-03	0.170E-04	0.
HIE2	30	0.4400E 01	0.5500E 01	0.9357E-03	0.9580E-03	0.079	0.1029E-02	-0.714E-04	0.
VBE2	31	0.3000E-00	0.3600E-00	0.3757E-01	0.2264E-02	0.188	0.2254E-02	0.950E-05	0.
HFE3	32	0.6000E 02	0.4500E 02	-0.1168E-02	0.2316E-01	1.921	0.1752E-01	0.564E-02	0.
HOE3	33	0.2400E-01	0.1800E-01	-0.3991E-00	0.2438E-02	0.202	0.2395E-02	0.433E-04	0.
HIE3	34	0.4400E 01	0.5500E 01	0.6070E-05	0.9060E-04	0.008	0.6677E-05	0.839E-04	0.

Figure 5. Detailed MANDEX Results

VPE3	35	0.3000E-00	0.3600E-00	0.5841E-02	0.3085E-03	0.026	0.3504E-03	-0.419E-04	0.
HFE4	36	0.4500E 02	0.3000E 02	-0.2232E-02	0.5000E-01	4.146	0.3348E-01	0.165E-01	0.
HOE4	37	0.8700E-03	0.2175E-03	-0.2021E 02	0.1331E-01	1.104	0.1319E-01	0.124E-03	0.
HIE4	38	0.3600E 03	0.5400E 03	0.6274E-04	0.1134E-01	0.940	0.1129E-01	0.458E-04	0.
VBE4	39	0.4300E-00	0.4945E-00	0.1203E-00	0.7751E-02	0.643	0.7757E-02	-0.566E-05	0.
HFE5	40	0.3500E 02	0.4500E 02	0.3118E-01	0.2433E-00	20.175	0.3118E-00	-0.684E-01	0.
HOE5	41	0.4400E-04	0.6600E-04	0.1213E 04	0.2664E-01	2.209	0.2670E-01	-0.597E-04	0.
HIE5	42	0.9000E 03	0.7200E 03	-0.7733E-03	0.1395E-00	11.566	0.1392E-00	0.301E-03	0.
VBE5	43	0.6100E 00	0.5600E 00	-0.3450E 01	0.1725E-00	14.307	0.1726E-00	-0.133E-04	0.
RCB6	44	0.2500E 08	0.2500E 08	-0.5064E-12	-0.	-0.	-0.	-0.	0.
ICB6	45	1.0000E-07	1.0000E-06	0.1266E 03	0.1333E-03	0.011	0.1139E-03	0.193E-04	0.
IEB6	46	0.5000E-05	0.5000E-05	-0.	0.	0.	-0.	0.	0.

SUMMATIONS 0.1206E 01 0.1248E 01

WORST CASE SOLUTION MINUS NOMINAL SOLUTION FOR OUTPUT VARIABLE NO. 10 - V10- 0.1154E 01

SOLUTIONS FOR ALL OUTPUT VARIABLES WITH OUTPUT VARIABLE NO. 10 - V10- TESTED FOR WORST CASE MAX

0.66063E 01	0.66063E 01	0.60408E 01	0.12708E 01	0.55031E 01	0.16018E-00	0.35296E 01	-0.55362E 01
-0.17083E 02	-0.23833E 02	0.48276E-00	0.35257E-00	0.65330E 01	0.13030E-00	0.53355E 01	0.53355E 01
0.47700E 01	0.32723E 01	0.12196E 02	0.35296E 01	0.17772E 01	0.17772E 01	0.15400E 01	0.45397E-01
0.64297E-02	0.10568E-01	0.94820E 01	0.73455E 01	0.14855E-00	0.78419E-01	0.4 34E-02	

Figure 5. Detailed MANDEX Results (Cont)

OUTPUT VARIABLE SOLUTIONS FOR ONE-AT-A-TIME INPUT PARAMETER VARIATION

INPUT PARAMETER NO. 1 - R1 - AT MAX LOGIC STATE= 1 EQU CKT CHECK= 0.

0.72331E 01	0.72331E 01	0.68285E 01	0.10358E 01	0.64553E 01	-0.19763E-02	0.22948E 01	-0.10050E 02	
-0.17975E 02	-0.24987E 02	0.37285E-00	0.31259E-00	0.44705E 01	0.13282E-00	0.61973E 01	0.61973E 01	
0.57926E 01	0.47795E 01	0.87373E 01	0.22948E 01	0.15762E 01	0.15762E 01	0.11368E 01	0.27778E-01	
0.82296E-02	0.12451E-01	0.97682E 01	0.65850E 01	0.13276E-00	0.71904E-01	0.31654E-02		

INPUT PARAMETER NO. 1 - R1 - AT MIN LOGIC STATE= 1 EQU CKT CHECK= 0.

0.72331E 01	0.72331E 01	0.68285E 01	0.10358E 01	0.64553E 01	-0.19763E-02	0.22948E 01	-0.10050E 02	
-0.17975E 02	-0.24987E 02	0.37285E-00	0.31259E-00	0.44705E 01	0.13282E-00	0.61973E 01	0.61973E 01	
0.57926E 01	0.47795E 01	0.87373E 01	0.22948E 01	0.15762E 01	0.15762E 01	0.11368E 01	0.27778E-01	
0.82296E-02	0.12451E-01	0.97682E 01	0.65850E 01	0.13276E-00	0.71904E-01	0.31654E-02		

INPUT PARAMETER NO. 2 - R2 - AT MAX LOGIC STATE= 1 EQU CKT CHECK= 0.

0.72317E 01	0.72317E 01	0.68270E 01	0.10358E 01	0.64539E 01	-0.20788E-02	0.22922E 01	-0.10066E 02	
-0.17976E 02	-0.24988E 02	0.36202E-00	0.31259E-00	0.44704E 01	0.13283E-00	0.61959E 01	0.61959E 01	
0.57912E 01	0.47781E 01	0.87224E 01	0.22922E 01	0.15763E 01	0.15763E 01	0.11368E 01	0.27455E-01	
0.82387E-02	0.12461E-01	0.97666E 01	0.65837E 01	0.13118E-00	0.71861E-01	0.31635E-02		

INPUT PARAMETER NO. 2 - R2 - AT MIN LOGIC STATE= 1 EQU CKT CHECK= 0.

0.72362E 01	0.72362E 01	0.68316E 01	0.10359E 01	0.64584E 01	-0.17518E-02	0.23005E 01	-0.10014E 02	
-0.17973E 02	-0.24984E 02	0.39657E-00	0.31259E-00	0.44709E 01	0.13279E-00	0.62004E 01	0.62004E 01	
0.57957E 01	0.47826E 01	0.87699E 01	0.23005E 01	0.15760E 01	0.15760E 01	0.11367E 01	0.28485E-01	
0.82096E-02	0.12430E-01	0.97717E 01	0.65879E 01	0.13623E-00	0.71997E-01	0.31697E-02		

INPUT PARAMETER NO. 3 - R3 - AT MAX LOGIC STATE= 1 EQU CKT CHECK= 0.

0.72331E 01	0.72331E 01	0.68285E 01	0.10358E 01	0.64553E 01	-0.55524E-02	0.22948E 01	-0.10050E 02	
-0.17975E 02	-0.24987E 02	0.37285E-00	0.31259E-00	0.44705E 01	0.13278E-00	0.61973E 01	0.61973E 01	
0.57926E 01	0.47795E 01	0.87373E 01	0.22948E 01	0.15762E 01	0.15762E 01	0.11368E 01	0.27778E-01	
0.82296E-02	0.12451E-01	0.97682E 01	0.65851E 01	0.13276E-00	0.71904E-01	0.31654E-02		

INPUT PARAMETER NO. 3 - R3 - AT MIN LOGIC STATE= 1 EQU CKT CHECK= 0.

0.72331E 01	0.72331E 01	0.68285E 01	0.10358E 01	0.64553E 01	0.58497E-02	0.22948E 01	-0.10050E 02	
-0.17975E 02	-0.24987E 02	0.37285E-00	0.31259E-00	0.44705E 01	0.13290E-00	0.61973E 01	0.61973E 01	
0.57926E 01	0.47795E 01	0.87373E 01	0.22948E 01	0.15762E 01	0.15762E 01	0.11368E 01	0.27778E-01	
0.82296E-02	0.12451E-01	0.97681E 01	0.65850E 01	0.13276E-00	0.71904E-01	0.31654E-02		

Figure 6. One-at-a-Time Solutions

MANDEX RESULTS

POWER SUPPLY REGULATOR CASE 1

SYM.	NO.	TEST LIMITS MAX VALUE	TEST LIMITS MIN VALUE	SOLUTION VALUES MAX	SOLUTION VALUES MIN	CIRCUIT REQUIREMENT CHECK MAX	CIRCUIT REQUIREMENT CHECK MIN	PARAMETERS CONTRIBUTING MORE THAN 20 PERCENT OF OUTPUT VARIATION MAXIMUM				MINIMUM			
V1	1	-0.	-0.	0.10234E 02	0.36548E 01	F	•	•	•	•	18	•	•	•	18
V2	2	-0.	-0.	0.10234E 02	0.36548E 01	F	•	•	•	•	18	•	•	•	18
V3	3	-0.	-0.	0.98525E 01	0.31965E 01	F	•	•	•	•	18	•	•	•	18
V4	4	-0.	-0.	0.14164E 01	0.71886E 00	F	•	•	•	•	17	•	•	•	17
V5	5	-0.	-0.	0.95602E 01	0.27253E 01	F	•	•	•	•	18	•	•	•	18
V6	6	-0.	-0.	EQ CKT FAIL	-0.45905E-00	•	F	•	•	•	17	•	•	•	17
V7	7	-0.	-0.	0.37377E 01	0.16803E 01	F	•	•	•	22	17	•	•	•	17
V8	8	-0.	-0.	-0.50533E 01	-0.12986E 02	•	F	•	•	•	•	•	•	•	9
V9	9	-0.	-0.	-0.17083E 02	-0.19250E 02	•	F	•	•	40	23	•	•	40	23
V10	10	-0.24500E 02	-0.25500E 02	-0.23833E 02	-0.26641E 02	F	F	•	•	40	23	•	•	40	23
PR2	11	0.33300E-00	0.	0.55780E 00	NOT TESTED	F	•	•	•	19	18	•	•	•	•
PR7	12	0.10000E 01	0.	0.41231E-00	NOT TESTED	•	•	•	•	19	7	•	•	•	•
PR1	13	0.50000E 01	0.	0.81161E 01	NOT TESTED	F	•	•	•	•	17	•	•	•	•
PR16	14	0.33300E-00	0.	0.16373E-00	NOT TESTED	•	•	•	•	•	16	•	•	•	•
VEC1	15	0.40000E 02	0.	0.95128E 01	NOT TESTED	•	•	•	•	•	18	•	•	•	•
VEC2	16	0.40000E 02	0.	0.95128E 01	NOT TESTED	•	•	•	•	•	18	•	•	•	•
VEC3	17	0.40000E 02	0.	0.91312E 01	NOT TESTED	•	•	•	•	•	18	•	•	•	•
VCE4	18	0.50000E 02	0.	0.82635E 01	NOT TESTED	•	•	•	•	•	18	•	•	•	•
VCE5	19	0.20000E 02	0.	0.14505E 02	NOT TESTED	•	•	•	•	•	•	•	•	•	•
VCE6	20	0.10000E 02	0.	0.37377E 01	NOT TESTED	•	•	•	•	22	17	•	•	•	•
IC1	21	0.15000E 02	0.	0.26154E 01	NOT TESTED	•	•	•	•	•	17	•	•	•	•
IC2	22	0.15000E 02	0.	0.26153E 01	NOT TESTED	•	•	•	•	•	17	•	•	•	•
IC3	23	0.15000E 02	0.	0.16976E 01	NOT TESTED	•	•	•	•	•	17	•	•	•	•
IC4	24	0.20000E-00	-0.	0.50595E-01	NOT TESTED	•	•	•	•	32	17	•	•	•	•
IC5	25	0.15000E-01	-0.	0.94957E-02	NOT TESTED	•	•	•	•	•	9	•	•	•	•
ICR4	26	0.15000E-01	0.50000E-02	0.14352E-01	0.10218E-01	•	•	•	•	•	9	•	•	•	•
PQ1	27	0.19000E 02	0.	0.20408E 02	NOT TESTED	F	•	•	•	18	17	•	•	•	•
PQ3	28	0.19000E 02	0.	0.12697E 02	NOT TESTED	•	•	•	•	•	18	•	•	•	•
PQ4	29	0.25000E-00	0.	0.31268E-00	NOT TESTED	F	•	•	•	32	18	•	•	•	•
PQ5	30	0.55000E-01	0.	0.90233E-01	NOT TESTED	F	•	•	•	•	8	•	•	•	•
ICR2	31	0.27500E-01	0.50000E-02	0.60536E-02	0.56486E-03	•	F	•	•	19	7	•	•	19	9

Figure 7. Summary of MANDEX Results

COMPARISON OF OUTPUT VARIABLES NOMINAL SOLUTIONS AND OUTPUT VARIABLES BREADBOARD VALUES

POWER SUPPLY REGULATOR CASE 1

SYMBOL	NUMBER	COMPUTED NOMINAL SOLUTIONS	BREADBOARD VALUES	NUMERICAL DIFFERENCES	PERCENT DIFFERENCES
V1	1	0.7233E 01	0.7220E 01	-0.1315E-01	-0.182
V2	2	0.7233E 01	0.7220E 01	-0.1315E-01	-0.182
V3	3	0.6828E 01	0.6920E 01	0.9153E-01	1.323
V4	4	0.1036E 01	BREADBOARD	VALUE ENTERED	AS ZERO
V5	5	0.6455E 01	0.6720E 01	0.2647E-00	3.939
V6	6	-0.1976E-02	0.3000E-01	0.3198E-01	106.588
V7	7	0.2295E 01	0.2420E 01	0.1252E-00	5.174
V8	8	-0.1005E 02	-0.9980E 01	0.6958E-01	-0.697
V9	9	-0.1798E 02	-0.1878E 02	-0.8049E 00	4.286
V10	10	-0.2499E 02	-0.2488E 02	0.1069E-00	-0.430
PR2	11	0.3728E-00	BREADBOARD	VALUE ENTERED	AS ZERO
PR7	12	0.3126E-00	BREADBOARD	VALUE ENTERED	AS ZERO
PR1	13	0.4471E 01	BREADBOARD	VALUE ENTERED	AS ZERO
PR16	14	0.1328E-00	BREADBOARD	VALUE ENTERED	AS ZERO
VEC1	15	0.6197E 01	BREADBOARD	VALUE ENTERED	AS ZERO
VEC2	16	0.6197E 01	BREADBOARD	VALUE ENTERED	AS ZERO
VEC3	17	0.5793E 01	BREADBOARD	VALUE ENTERED	AS ZERO
VCE4	18	0.4779E 01	BREADBOARD	VALUE ENTERED	AS ZERO
VCE5	19	0.8737E 01	BREADBOARD	VALUE ENTERED	AS ZERO
VCE6	20	0.2295E 01	BREADBOARD	VALUE ENTERED	AS ZERO
IC1	21	0.1576E 01	BREADBOARD	VALUE ENTERED	AS ZERO
IC2	22	0.1576E 01	BREADBOARD	VALUE ENTERED	AS ZERO
IC3	23	0.1137E 01	BREADBOARD	VALUE ENTERED	AS ZERO
IC4	24	0.2778E-01	BREADBOARD	VALUE ENTERED	AS ZERO
IC5	25	0.8230E-02	BREADBOARD	VALUE ENTERED	AS ZERO
ICR4	26	0.1245E-01	BREADBOARD	VALUE ENTERED	AS ZERO
PQ1	27	0.9768E 01	BREADBOARD	VALUE ENTERED	AS ZERO
PQ3	28	0.6585E 01	BREADBOARD	VALUE ENTERED	AS ZERO
PQ4	29	0.1328E-00	BREADBOARD	VALUE ENTERED	AS ZERO
PQ5	30	0.7190E-01	BREADBOARD	VALUE ENTERED	AS ZERO
ICR2	31	0.3165E-02	BREADBOARD	VALUE ENTERED	AS ZERO

TOTAL NUMBER OF MATRIX SOLUTIONS = 510

END OF MANDEX PROGRAM

Figure 8. Summary of Results Versus Breadboard Data