316

NASA CR-54101

N64-31713
(ACCESSION NUMBER)
428
(PAGES)
CR-54101
(NASA CR OR TMX OR AD NUMBER)
(THRU)
1
(CODE)
06
(CATEGORY)
FACILITY FORM 602

VOLUME 1

BRUSHLESS ROTATING ELECTRICAL GENERATORS FOR SPACE AUXILIARY POWER SYSTEMS

by

J. N. Ellis and F. A. Collins

prepared for

NATIONAL AERONAUTICS AND SPACE ADMINISTRATION

CONTRACT NO. NAS 3-2783

OTS PRICE

XEROX $ 2.00 FS

MICROFILM $ 2.00 mf.

LEAR SIEGLER, INC.

POWER EQUIPMENT DIVISION

CLEVELAND 1, OHIO

NOTICE

This report was prepared as an account of Government sponsored work. Neither the United States, nor the National Aeronautics and Space Administration (NASA), nor any person acting on behalf of NASA:

A.) Makes any warranty or representation, expressed or implied, with respect to the accuracy, completeness, or usefulness of the information contained in this report, or that the use of any information, apparatus, method, or process disclosed in this report may not infringe privately owned rights; or

B.) Assumes any liabilities with respect to the use of, or for damages resulting from the use of any information, apparatus, method or process disclosed in this report.

As used above, "person acting on behalf of NASA" includes any employee or contractor of NASA, or employee of such contractor, to the extent that such employee or contractor of NASA, or employee of such contractor prepares, disseminates, or provides access to, any information pursuant to his employment or contract with NASA, or his employment with such contractor.

CASE FILE COPY

Requests for copies of this report should be referred to:

National Aeronautics and Space Administration
Office of Scientific and Technical Information
Washington 25, D.C.
Attention: AFSS-A

14277

NASA CR - 54101

THIRD QUARTERLY
REPORT

July 15, 1964

BRUSHLESS ROTATING ELECTRICAL GENERATORS FOR SPACE AUXILIARY POWER SYSTEMS

Contract No. NAS 3-2783

prepared for

NATIONAL AERONAUTICS AND SPACE ADMINISTRATION

by

J. N. Ellis and F. A. Collins

Technical Management
Howard A. Shumaker
NASA Lewis Research Center
Space Power System Division
Solar and Chemical Power Branch

LEAR SIEGLER, INC.
Power Equipment Division
Cleveland, Ohio

TABLE OF CONTENTS

Summary 1

Introduction 2

Work Being Accomplished 3

Contents of Next Report 5

Design Manual for Two-Coil, Inside-Coil Lundell or Bekey-Robinson Generator . . . . . Section A

Design Manual for Two-Coil, Outside-Coil Lundell Generator . . . . . Section B

Design Manual for Single-Coil, Outside-Coil Lundell Generator . . . . . Section C

Design Manual for Rotating-Coil Lundell (Automotive Type) . . . . . Section D

Design Manual for Inside-Coil, Stationary-Coil Lundell . . . . . Section E

Design Manual for Permanent-Magnet AC Generators . . . . . Section F

Design Manual for Homopolar Inductor AC Generators . . . . . Section G

Design Manual for Disk-Type or Axial Air-Gap Lundell Generator . . . . . Section H

Synchronous AC Generator Equivalent Circuits . . . . . Section I

SUMMARY

3/7/13

In this quarterly report, design manuals and Fortran computer programs are presented for the following AC generators:

1. Two-Coil, Inside-Coil Lundell or Becky-Robinson Generator
2. Two-Coil, Outside-Coil Lundell
3. Single-Coil, Outside Coil Lundell
4. Rotating-Coil Lundell (Automotive Type)
5. Inside-Coil, Stationary-Coil Lundell.

Design manuals without computer programs are presented for:

6. Permanent-Magnet AC Generators
7. Homopolar Inductor AC Generators
8. Disk-Type or Axial Air-Gap Lundell Generator

An equivalent circuit representation of synchronous AC generators is published with a discussion of its development.

INTRODUCTION

This study is sponsored by the National Aeronautics and Space Administration under Contract No. NAS3-2783.

The objective as set forth in the NASA work statement introduction is: --- "To advance the technology for the brushless types of rotating electrical generators, specifically for space auxiliary power plants."

A further objective of this study is to provide tools that will allow the reader to select the best generator for a specific application, to calculate the design performance, and to evaluate any contemplated changes in design parameters or materials.

WORK BEING ACCOMPLISHED

Complete design manuals and computer programs are being written for those brushless AC generators that are believed most likely to be considered for space applications and for ground-based applications.

This approach to the study was taken rather than to reject all but two or three generator types on the basis of a superficial examination. Each of the machines presented in this study are considered to have an application area.

In the first quarterly report, design manuals for wound-rotor, salient pole and nonsalient pole generators were published with a Bell computer program for the salient pole generator. Derivations for most of the design formulae were given.

In the second quarterly report, a Fortran computer program for wound pole, salient pole generators was published with the design manual for that generator. The design manual without the computer program was published for the two-coil inside-coil Lundell or Becky-Robinson generator.

Discussions on length-to-diameter ratios, pole-face losses as design limits and motoring capabilities of salient pole generators are also given in the second quarterly report.

In this, the third quarterly report, Fortran computer programs and design manuals are published for the following AC generators:

1. Two-Coil, Inside-Coil Lundell or Becky-Robinson Generator
2. Two-Coil, Outside-Coil Lundell Generator
3. Single-Coil, Outside-Coil Lundell Generator
4. Rotating-Coil Lundell (Automotive-Type) Generator
5. Inside-Coil, Stationary-Coil, Lundell Generator

Design manuals without computer programs are published for:

6. Permanent-Magnet AC Generators
7. Homopolar Inductor AC Generators
8. Axial Air-Gap Lundell Generators

The last three design manuals are to be programmed in Fortran for the final report. And, in addition, a program for Induction generators will be included if time on this contract permits.

Because of the general and widely understood use of the term Lundell, all of the generators discussed in this study that have claw-type or interlocking, finger-type poles are called Lundell generators. To most engineers, the name Lundell describes the rotor pole arrangement. In this report, there is no other basis for the use of the name.

THE NEXT REPORT

The next report is the final report, to be issued in October, and it will consist of two parts. The first part is generator selection criteria and the second part is the electrical design section.

In the first section, the selection criteria, comparison data will be published. Such data will be weight and physical size comparison, evaluations of rotor dynamics, suitability of the various types of generator rotors for use with gas or liquid bearings. Thermal equivalent circuits are to be published in the selection section also.

The second section of the final report will contain the generator design manuals with the Fortran computer programs and the synchronous generator equivalent circuits.

An appendix will be published containing the small studies, discussions and derivations that support the rest of the study.

For each generator design manual, a general approach to the start of a generator design will be provided. It will be similar to that provided for permanent magnet generators in this third quarterly report. Beyond this general approach, the user must select the various design parameters himself. The user of these programs should have some familiarity with AC machine design.

A person unfamiliar with electrical machine design would benefit from a synthesis program that selected the design parameters for the design program inputs, but the time available on this contract does not allow its development.

The design manual has been arranged as a computer program and the sequence of calculations results from storage limitations of the smaller computers (1620).

A number is assigned to a symbol and maintained throughout all of the manuals presented in this Quarterly Report. Where the symbol is not used in a particular manual, the symbol and corresponding number are omitted entirely from the manual.

The symbol number in brackets wherever found means the symbol and not the value of the number itself. Numbers without brackets are numerical values.

A symbol list with corresponding design manual calculation numbers, Fortran program symbols and the definition of the symbols is given at the beginning of the manual.

The design equations in the manual are written with symbols and are repeated with the bracketed numbers that locate the symbol definition in the symbol list.

Following the design equations, the Fortran program is published with the same identifying equation numbers found in the design manual.

NOTE ON WINDAGE CALCULATIONS

In each design manual there is a statement to the effect that there is no known satisfactory method of calculating windage. That, of course, is open to challenge and probably should read "we know of no . . . . . .". The formula given is crude and is only intended for use in standard air.

For gases or fluids other than standard air, the fluid density and viscosity must be considered. The formula given in the manual can be modified by the factors

$$\left(\frac{\rho}{.0765}\right)^{.8}\left(\frac{u}{.0435}\right)^{.2}$$

where

ρ = density - Lbs FT^{-3}

μ = viscosity LBS FT^{-1} HR^{-1}

.0765 = density std. air

.0435 = viscosity Std air

The above relationship can be arrived at by referring to Shepherd "Principles of Turbomachinery", Macmillan Pub. Company. See page 152. The friction factor for turbulent flow is a function of $\frac{1}{(R_e)^{.2}}$ and the loss is a function of $\frac{\rho}{(R_e)^{.2}}$ times a constant for a fixed velocity and fixed dimensions. The correction for a gas other than standard air, since $R_e = \frac{DV\rho}{u}$, would be

$$\frac{\rho}{\rho_{air}} \cdot \left(\frac{\rho_{air}}{\rho}\right)^{.2} \cdot \left(\frac{u}{u_{air}}\right)^{.2} \quad \text{or} \quad \left(\frac{\rho}{.0765}\right)^{.8}\left(\frac{u}{.0435}\right)^{.2}$$

TWO-COIL, INSIDE-COIL LUNDELL
OR BEKEY-ROBINSON GENERATOR

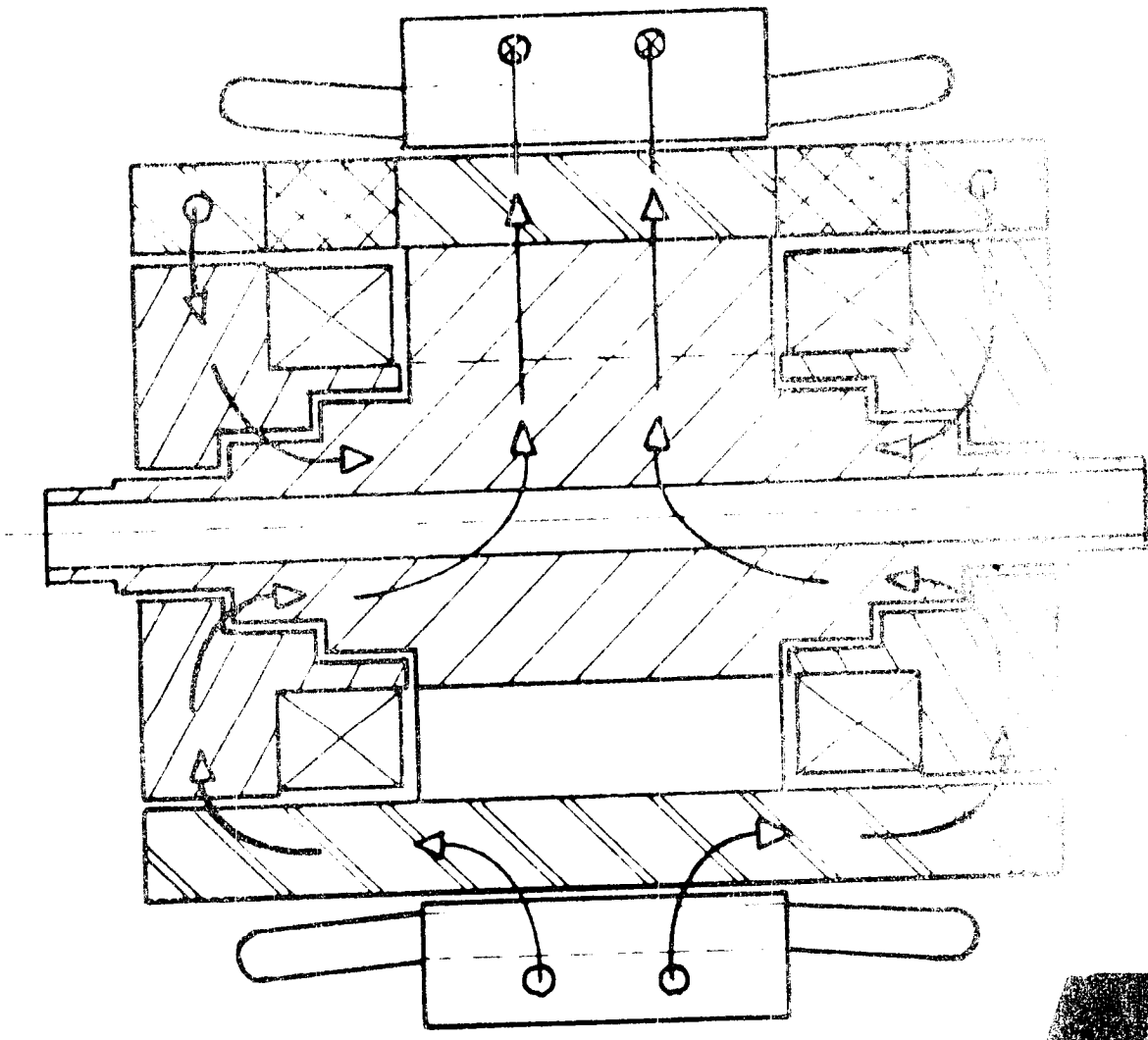

A

TWO-COIL, INSIDE-COIL LUNDELL OR BECKY-ROBINSON TYPE GENERATOR

The Two-Coil Lundell (Becky-Robinson Type) Generator section of the Second Quarterly Report has been reassembled and rewritten for this Third Quarterly Report. The design manual and equations are now presented as one document. The computer program is written in Fortran computer language. This complete package is called "The Two-Coil Inside-Coil (Becky-Robinson Type) Computer Design Manual".

This Computer Design Manual contains the following:

1. A numbered series of definitions and equations forming the body of the design calculations.
2. A list of numbered symbols (Electrical and Fortran).
3. A collection of tables, graphs and figures that are necessary in preparing an input sheet.
4. Standard magnetization curves for the materials used in a design that was built and tested.
5. An input and output computer sheet.
6. A complete list of Fortran equations numbered to match the design manual equations.

Design Procedure

This computer program is an analysis procedure. In an analysis procedure, all of the machine dimensions and winding specifications are given in addition to the rating. With all of this information given, the computer calculates the performance of the machine.

A generator design starts with the input sheet. All of the information that has been gathered on the generator in question is recorded on the input sheet. The inputs listed on the input sheet follow the design manual calculations sequentially except for a few cases.

Each input is identified in three ways: 1) by a symbol, 2) by an explanation of each symbol, and 3) by an identification number which is bracketed in parenthesis. This identification number or item number shows the location of the particular input in the design manual. At each location in the design manual, a complete explanation is given for each symbol in question along with the equations where they apply. For example, given on the input sheet is (4) (E_{PH}) Phase Volts. If there is any question by the user as to just what is meant by phase volts or how it is calculated, he need only to look up item (4) in the design manual. Item (4) gives the following information:

For three phase Y [redacted] connected generators:

$$E_{PH} = \frac{(\text{Line Volts})}{\sqrt{3}} = \frac{(3)}{\sqrt{3}}$$

For three phase Δ [redacted] connected generators:

$$E_{PH} = (\text{Line Volts}) = (3)$$

Each item, as shown in Item (4) above has three parts:

1. A word definition explaining the item.
2. An equation using symbols.
3. An equation using the location number for each symbol.
   a. When a number in an equation is bracketed by parenthesis such as (3) in Item (4), it has no numerical value. It represents the location of the symbol that is used in the equivalent equation.
   b. When a number such as 3 in Item (4) is not bracketed by parenthesis, then it is a real number and must be used accordingly.

The accuracy of this design procedure depends upon evaluating the leakage paths in the rotor. In order to obtain reasonable results, the designer must have a good understanding of the rotor construction. There are an unlimited number of pole shapes and construction techniques that can be employed on the rotor design, but for the computer design manual as it is presented here, certain limits have been set.

1. Only two different pole (north pole) shapes will be programmed. They are the hexagonal, and the rectangular or square

2. Two types of auxiliary gap (g3) will be programmed. The and the tapered

3. Other pole shapes and gap arrangements must be resolved into an equivalent rotor and calculated accordingly.

Detailed drawings are published in this design manual to help clarify the rotor construction and leakage flux paths. Since so much importance is placed on evaluating the rotor leakage paths, the computer program is set up to give the designer two approaches in this area.

1. The first approach is to let the computer calculate the leakage paths and permeances. This can be done by inserting 0.0 on the input sheet for P_1, P_2, P_3, P_4, etc.
2. The second approach is to make a detailed layout of the rotor, measure the leakage paths, and calculate permeance from the drawing. The calculated values can then be used as input data. Insert these actual values on the input sheet for P_1, P_2, P_3, P_4, etc., the computer will use these given values throughout the calculations.

A minimum number of rules must be followed in order to make a computer design:

1. Fill out input sheet completely.
2. All whole numbers and zeros must be followed by a decimal point. For example, if the number that is to be used on the input is either 1, 2 or 0, they must be inserted as 1., 2., or 0. . All decimal numbers are accepted as is. That is, 1.4 should be entered as 1.4.

3. When a question arises about a particular input, refer back to the location per the item number for a detailed explanation.

4. When a particular magnetization curve is to be used, the proper code number should be used as an input if the curve is available on "card decks". The code number can be any number that is mutually agreed on by the designers and the computer operators. The code simply tells the operator which curve to use.

Output Sheet

The output sheet is set up for the computer to type out the answers directly in the spaces provided. The space is set up to accept 5 places to the left and right of the decimal point. Single spacing is used on the vertical and regular type spacing on the horizontal.

Each item on the output sheet can be checked out by referring back to the item number in the design manual in the same manner as outlined above for the input data.

The flux circuit of the two-coil Lundell generator looks like this.

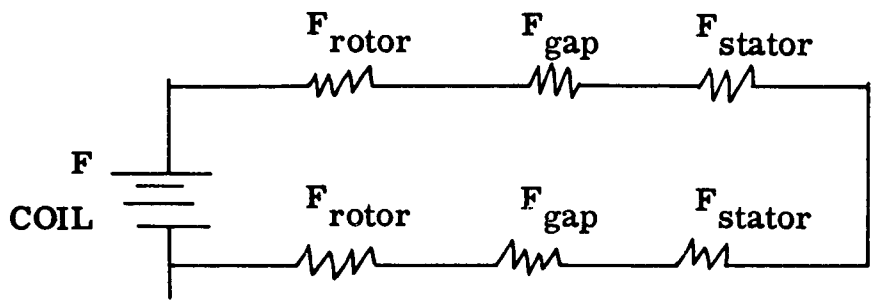

The rotor flux circuit is

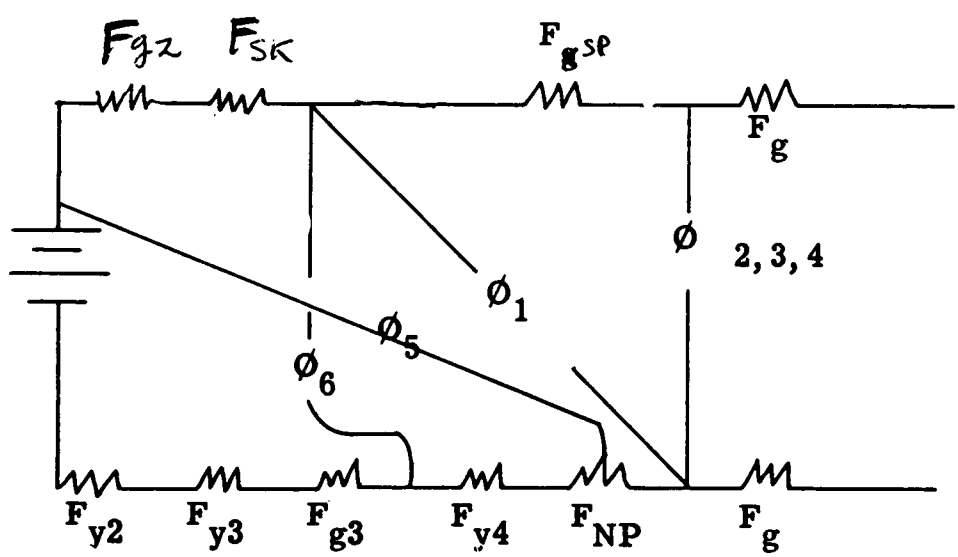

And for the entire machine, the flux circuit looks like this.

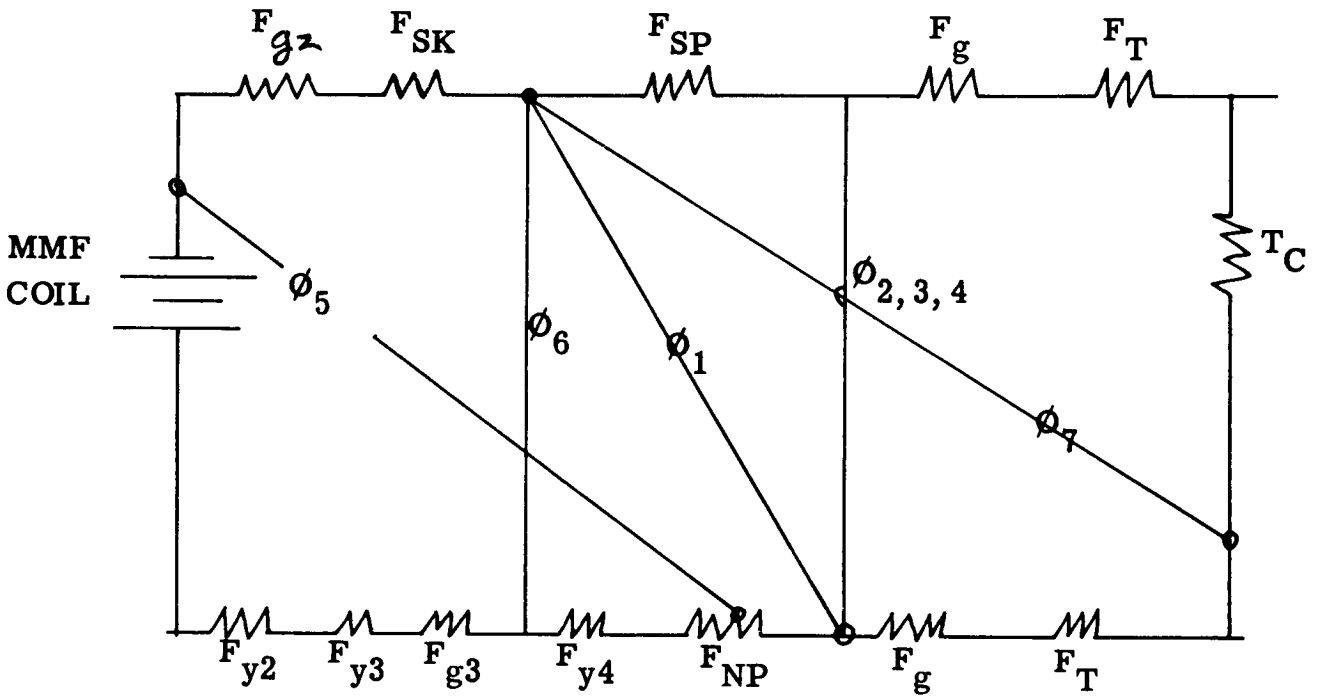

Flux Circuit for 2-Coil Lundell A-C Generator

NOTE: The machine could be represented by showing two identical flux circuits in the south pole, from and including F_{SP} to and including F_{y4}. Instead the calculations are adjusted to fit the single circuit.

VIEW OF BOTH NORTH-POLE AND SOUTH-POLE FLUX CIRCUITS SHOWING THE MMF DROPS IN THE TWO-COIL LUNDELL BRUSHLESS AC GENERATOR

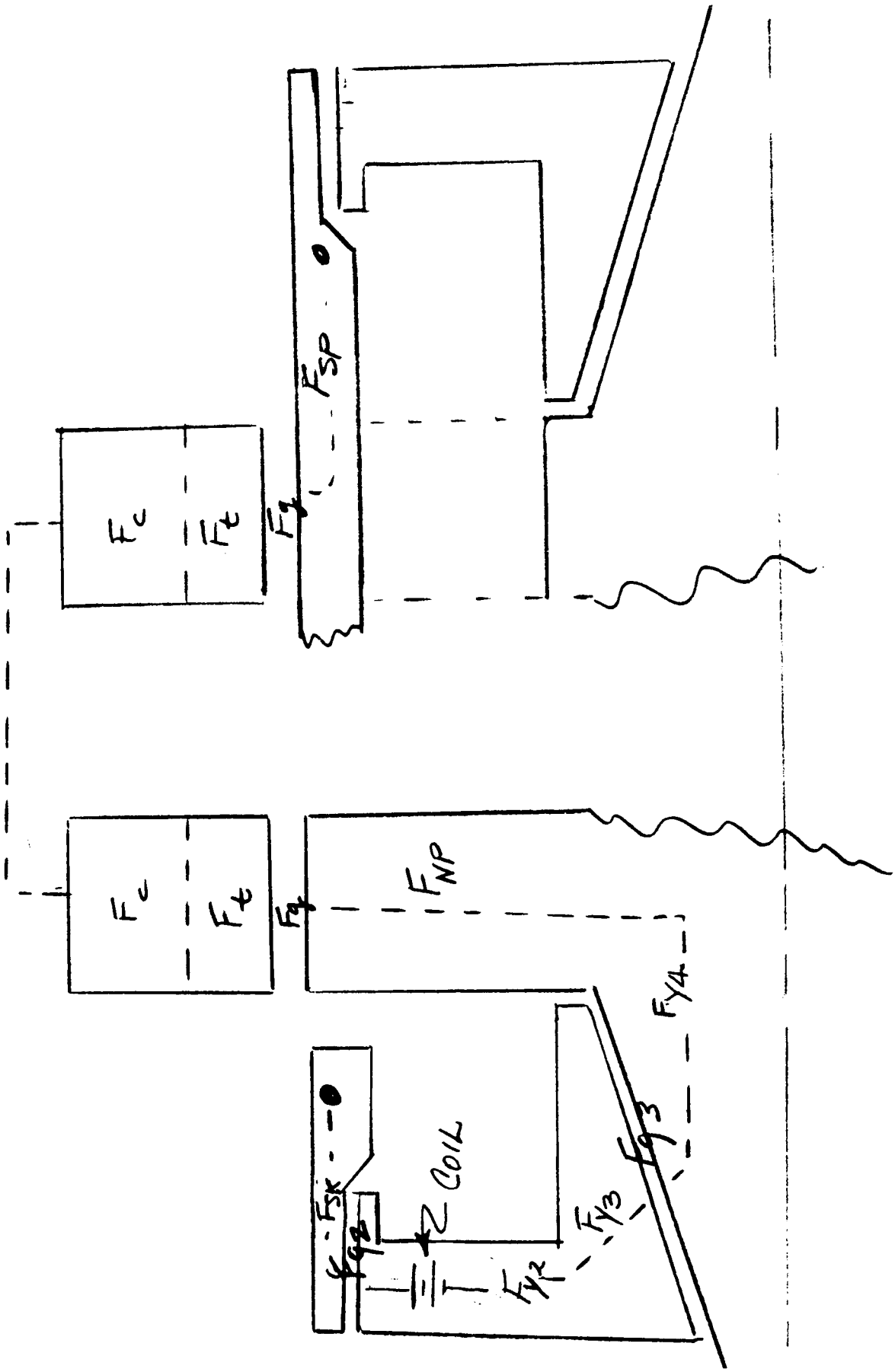

TWO COIL LUNDELL

(BECKY-ROBINSON TYPE)

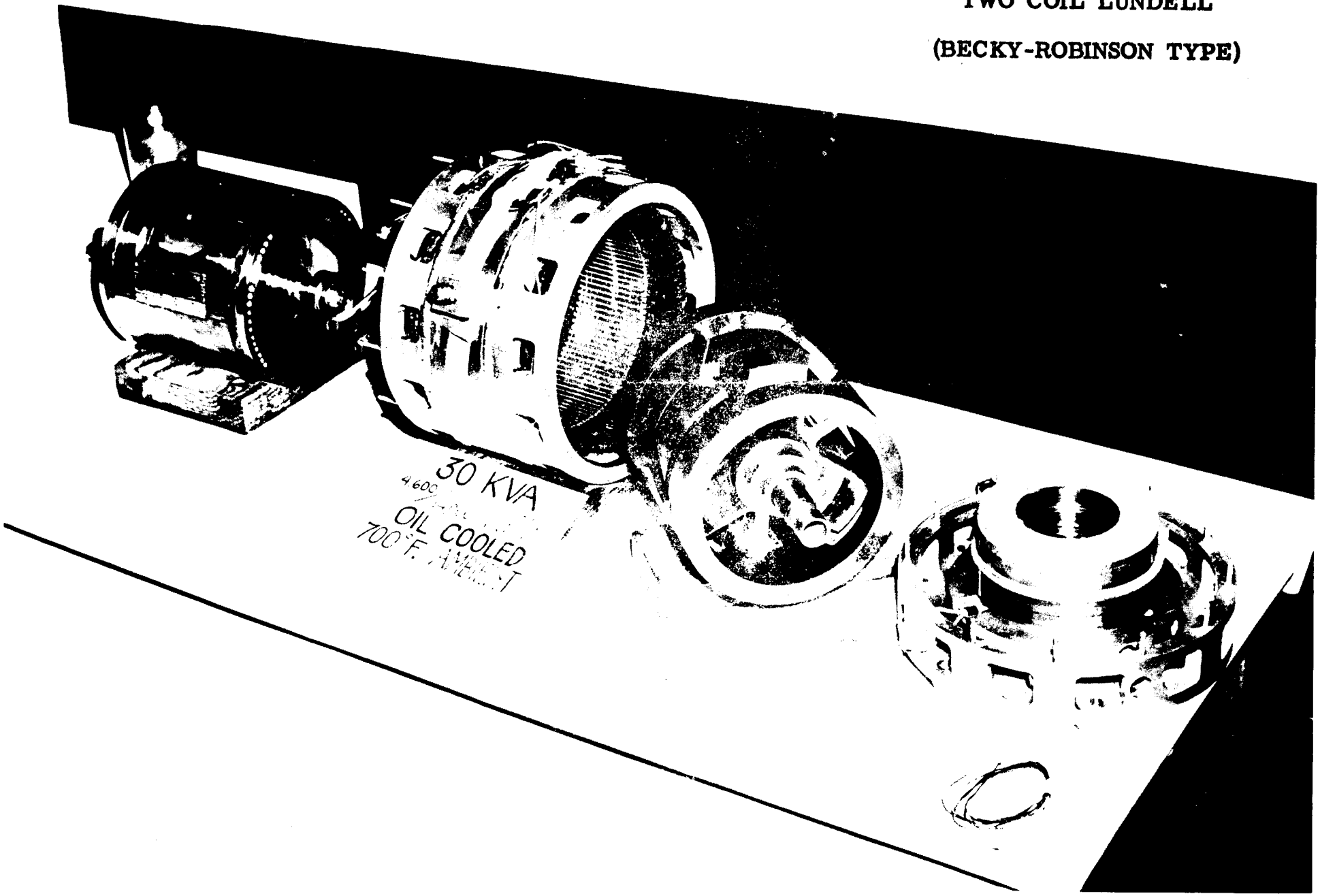

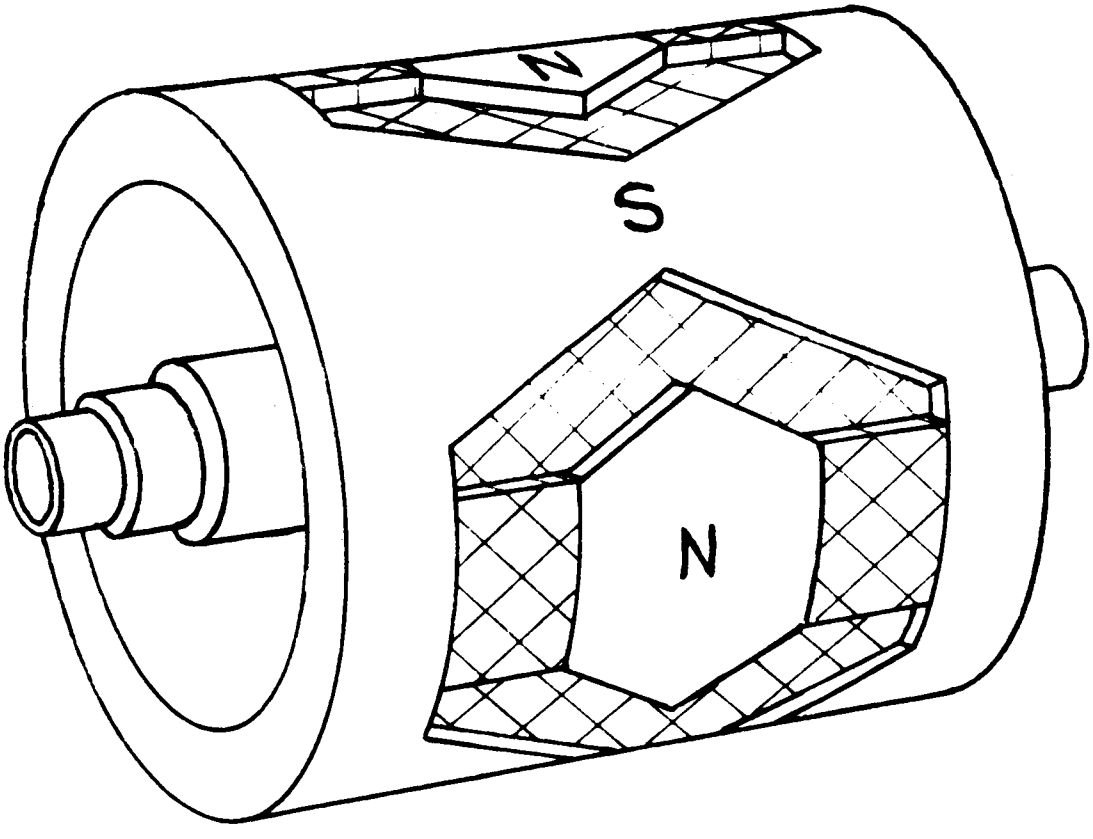
N
S
N

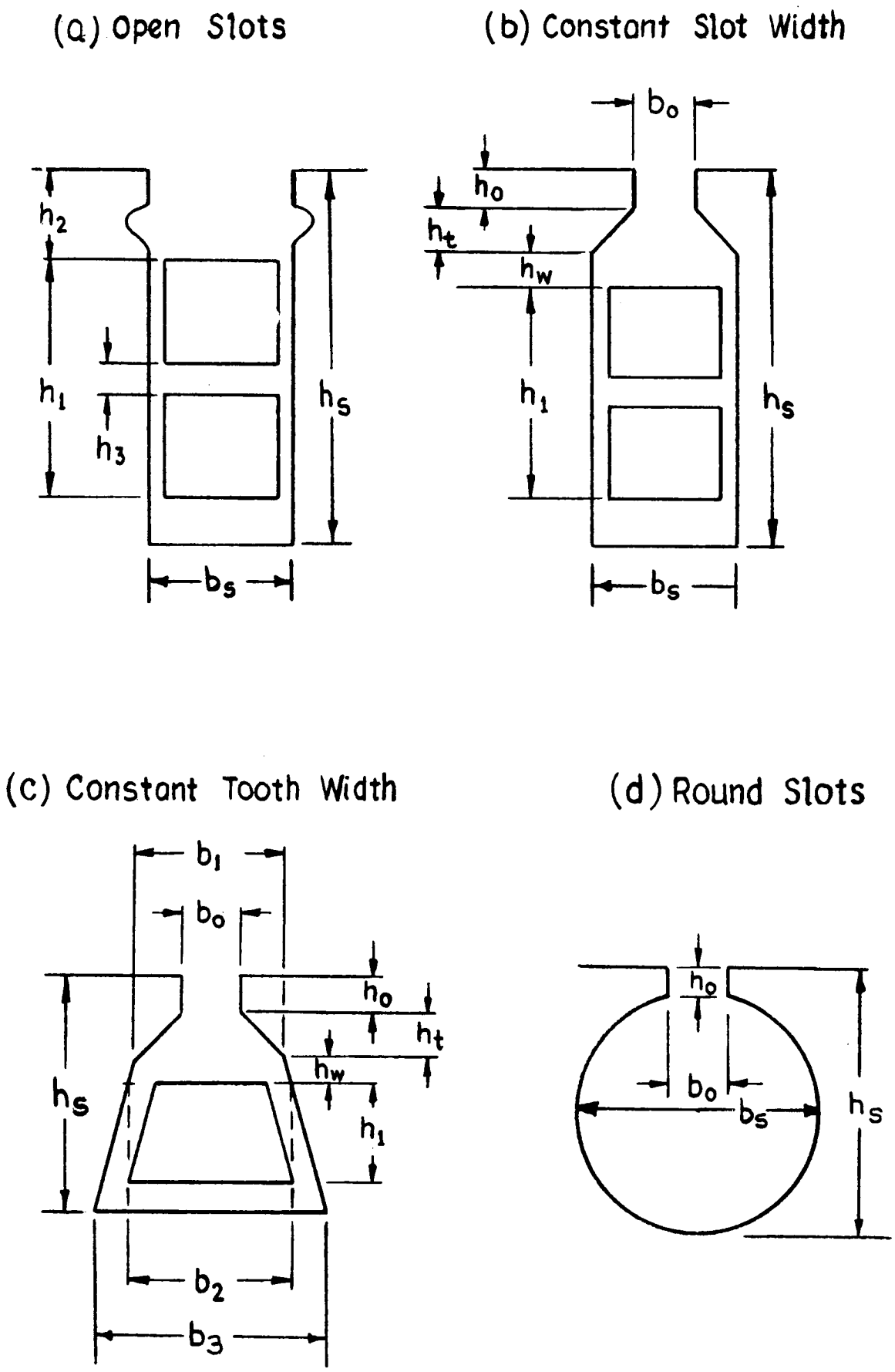
(a) Open Slots
(b) Constant Slot Width
(c) Constant Tooth Width
(d) Round Slots
h_2
h_1
h_3
h_s
b_s
b_o
h_o
h_t
h_w
b_1
b_2
b_3

FIG 1

TABLE - 1

Chord Factors K_p For Harmonics At Different Pitches

q														y/mg																									
1	3/3																																2/3						
2	6/6																5/6																4/6						
3	9/9											8/9										7/9											6/9						
4	12/12								11/12								10/12								9/12								8/12						7/12
5	15/15						14/15							13/15						12/15							11/15						10/15				9/15		
6	18/18					17/18						16/18					15/18					14/18						13/18					12/18						
7	21/21				20/21					19/21					18/21				17/21					16/21					15/21				14/21						
8	24/24			23/24					22/24				21/24				20/24				19/24				18/24					17/24			16/24			15/24			14/24
9	27/27		26/27					25/27				24/27				23/27		22/27				21/27				20/27					19/27		18/27		17/27			16/27	
10	30/30	29/30					28/30				27/30			26/30			25/30			24/30			23/30				22/30					21/30	20/30	19/30			18/30		
y/mg	1.0	.967	.964	959	952	945	934	926	917	905	906	889	875	867	857	852	833	815	810	800	792	779	767	762	750	741	734	722	712	709	705	700	667	634	630	.625	600	592	584
1	1.0	999	998	998	997	996	995	993	991	989	988	985	981	978	975	973	966	958	956	951	947	940	934	931	924	918	914	906	901	897	894	891	866	839	835	831	809	800	793
3	1.0	988	985	981	975	966	951	940	924	901	891	865	831	809	782	766	707	643	623	588	556	500	454	434	383	342	309	259	222	195	174	156	0.0	156	174	195	309	342	383
5	1.0	966	958	947	931	906	866	835	793	733	707	643	556	500	434	396	259	116	075	0.0	065	174	259	295	383	447	500	574	623	660	690	707	866	966	974	982	1.0	998	993
7	1.0	943	918	897	866	819	743	686	609	500	454	342	177	105	0.0	058	259	449	500	588	659	766	839	866	924	958	978	996	1.0	998	993	988	866	629	588	559	309	225	139
9	1.0	897	866	831	782	707	588	500	383	223	156	0.0	191	304	434	500	707	866	901	951	981	1.0	998	975	924	866	804	707	623	556	500	454	0.0	358	407	462	500	755	875
11	1.0	834	802	750	680	574	407	287	131	075	156	342	556	660	782	795	966	998	989	951	897	766	629	583	383	231	105	087	222	321	396	454	866	999	994	981	809	721	618
13	1.0	777	727	659	563	423	208	058	131	365	454	643	831	914	975	993	966	802	733	588	442	174	052	148	383	550	669	818	901	947	973	988	866	371	294	195	309	459	598
15	1.0	707	643	556	434	259	0.0	174	383	624	707	866	981	1.0	975	940	707	342	223	0.0	195	500	707	782	924	981	1.0	966	907	831	766	707	0.0	696	760	831	1.0	982	930
17	1.0	629	550	442	295	087	208	346	609	826	891	985	981	914	782	686	259	231	365	588	752	940	999	997	924	802	669	423	222	065	058	156	866	940	898	831	309	100	113
19	1.0	545	449	321	149	087	407	597	793	956	988	985	831	669	434	287	259	727	826	951	998	940	777	680	363	116	105	423	623	752	835	891	866	072	047	194	809	952	989
21	1.0	454	342	195	0.0	259	588	766	924	1.0	988	866	556	309	0.0	174	707	985	1.0	951	831	500	156	0.0	383	643	804	966	1.0	981	940	891	0.0	881	935	981	809	628	402
23	1.0	358	231	064	149	423	743	894	991	956	891	643	195	105	434	597	966	918	826	588	321	174	545	680	924	998	978	819	623	442	287	156	866	792	696	555	309	566	778
25	1.0	259	116	064	295	574	866	973	991	826	707	342	195	500	782	894	966	550	365	0.0	321	766	966	997	924	727	500	087	222	442	597	707	866	061	383	555	1.0	951	809
27	1.0	170	0.0	195	434	707	951	1.0	924	624	454	0.0	556	809	975	1.0	707	0.0	223	558	831	1.0	897	782	383	0.0	305	707	901	981	1.0	988	0.0	983	1.0	981	309	025	356
29	1.0	052	116	321	563	819	995	973	793	365	156	342	831	978	975	894	259	550	733	951	998	766	358	148	383	727	914	996	901	752	597	454	866	569	412	194	809	965	995
31	1.0	052	231	442	680	906	995	894	109	075	156	643	981	978	782	597	259	918	989	951	752	174	358	583	924	998	914	574	222	065	287	454	866	517	673	831	809	525	162
33	1.0	156	342	556	782	966	951	766	383	223	454	866	981	809	434	174	707	985	901	588	195	500	891	975	924	643	309	259	623	831	940	988	0.0	992	946	831	309	666	910
35	1.0	259	449	659	866	996	866	597	131	500	707	985	831	500	0.0	287	966	727	500	0.0	442	940	966	866	383	116	500	906	1.0	947	835	707	866	294	079	194	1.0	905	637
37	1.0	358	550	750	931	996	743	396	131	793	891	985	556	105	434	686	966	231	075	588	897	940	545	295	383	802	978	906	623	321	058	156	866	855	884	981	309	150	577
39	1.0	454	643	831	975	966	588	174	383	901	988	866	195	309	782	940	707	342	623	951	981	500	156	434	924	985	809	259	222	556	766	891	0.0	909	780	555	805	990	939
41	1.0	545	727	891	997	906	407	058	609	989	988	643	195	669	975	933	259	802	956	951	659	174	777	931	924	550	105	574	901	998	973	891	866	010	264	555	809	414	088
43	1.0	629	802	947	997	819	208	287	793	989	891	342	556	914	975	795	259	998	956	588	065	766	999	931	383	231	669	996	901	660	346	156	866	916	990	981	309	754	984
45	1.0	707	866	987	925	707	0.0	500	924	901	707	0.0	831	1.0	782	500	707	866	623	0.0	556	1.0	707	434	383	866	1.0	707	222	145	500	707	0.0	739	523	194	1.0	844	262
47	1.0	777	918	998	931	574	208	686	991	733	454	342	981	914	434	058	966	449	075	588	947	766	052	295	924	958	669	087	623	897	993	988	866	312	575	831	305	273	762
49	1.0	839	958	998	866	423	407	835	991	500	156	643	981	669	0.0	396	966	116	500	951	947	174	629	866	224	597	105	819	1.0	897	690	454	866	994	979	831	809	1.0	823
51	1.0	891	985	981	782	259	588	940	924	223	156	866	831	309	434	766	707	643	901	951	556	500	988	975	383	342	809	966	623	195	174	454	0.0	501	203	194	805	297	333
53	1.0	934	998	947	680	087	743	993	793	075	454	985	556	105	782	973	259	958	989	588	065	940	839	583	383	918	978	423	222	660	894	988	866	585	818	981	309	721	997
55	1.0	966	998	897	563	087	866	993	605	365	707	985	195	500	975	973	259	958	733	0.0	659	940	259	148	924	918	500	423	901	998	894	707	866	979	853	555	1.0	771	187
57	1.0	988	995	831	434	255	951	940	383	624	891	866	195	809	975	766	707	643	223	588	981	500	454	782	924	342	309	966	901	556	174	156	0.0	215	141	555	309	407	899
59	1.0	999	958	756	295	423	995	835	131	826	988	643	556	978	782	396	966	116	365	951	897	174	934	997	383	597	914	819	222	321	690	891	866	803	965	981	809	994	777
61	1.0	999	978	659	149	574	995	686	131	956	988	342	831	978	434	058	966	449	826	951	442	766	934	680	383	958	914	087	623	947	993	891	866	872	625	194	809	175	557
63	1.0	988	866	556	0.0	707	051	500	383	1.0	891	0.0	981	809	0.0	500	707	866	1.0	588	195	1.0	454	0.0	924	866	309	707	1.0	831	500	156	0.0	091	468	831	309	894	947
[illegible]	1.0	966	[illegible]	[illegible]	149	[illegible]	866	[illegible]	[illegible]	956	[illegible]	342	981	500	434	795	259	998	826	0.0	752	766	259	680	924	231	500	996	623	065	396	707	866	946	997	831	1.0	689	063

CURVE 1

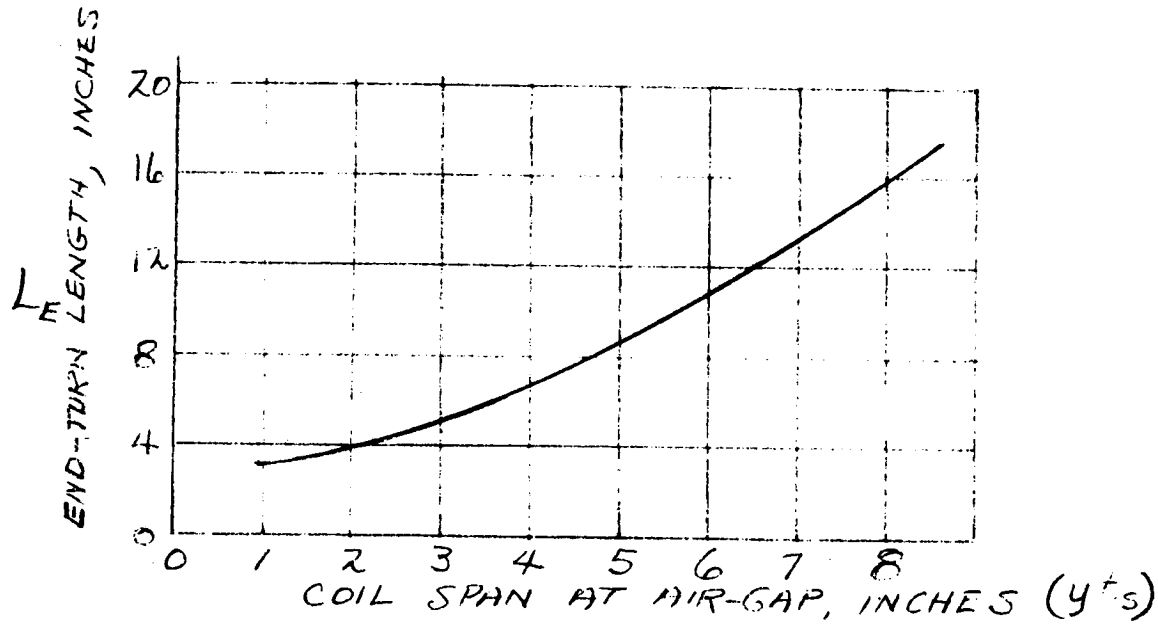

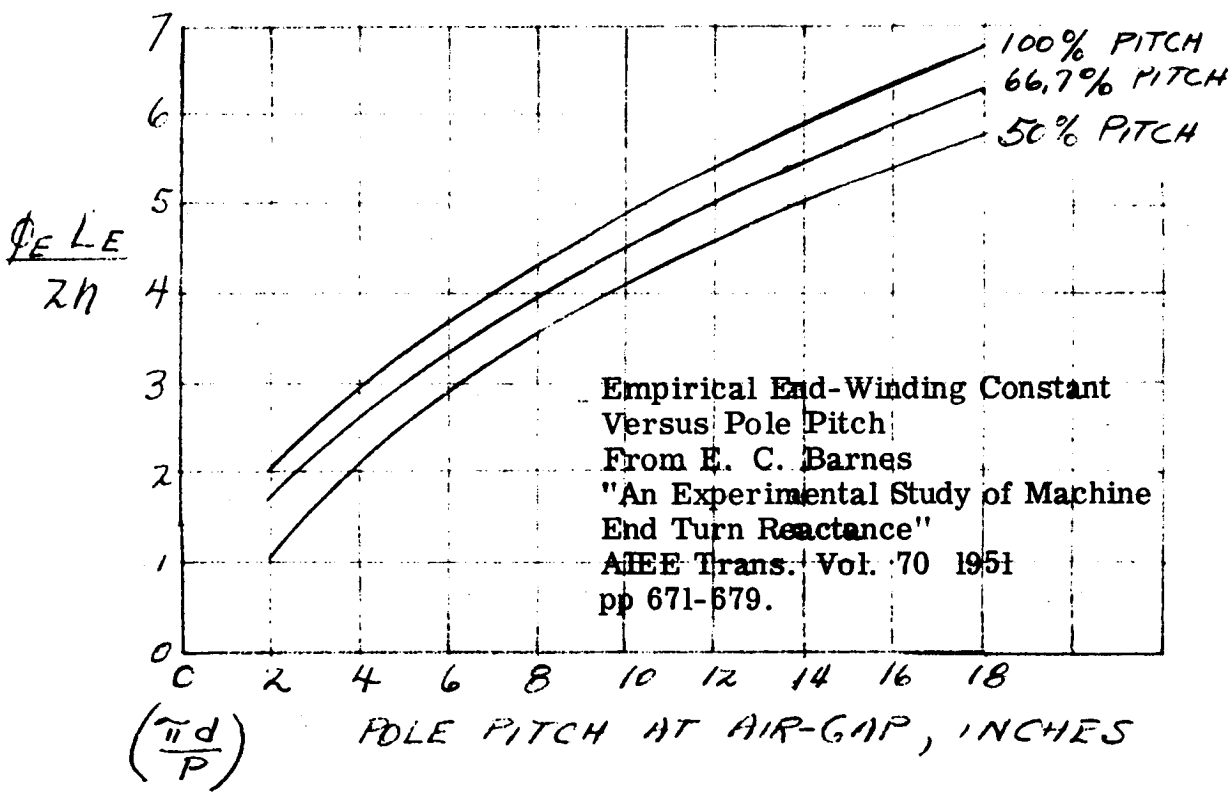

Empirical End-Winding Constant
Versus Pole Pitch
From E. C. Barnes
"An Experimental Study of Machine
End Turn Reactance"
AIEE Trans. Vol. 70 1951
pp 671-679.

CURVE-3

FROM E.I. POLLARD'S "LOAD LOSSES IN SALIENT POLE SYNCHRONOUS MACHINES" AIEE TRANS. VOL. 54 1935 PP 1332–1340

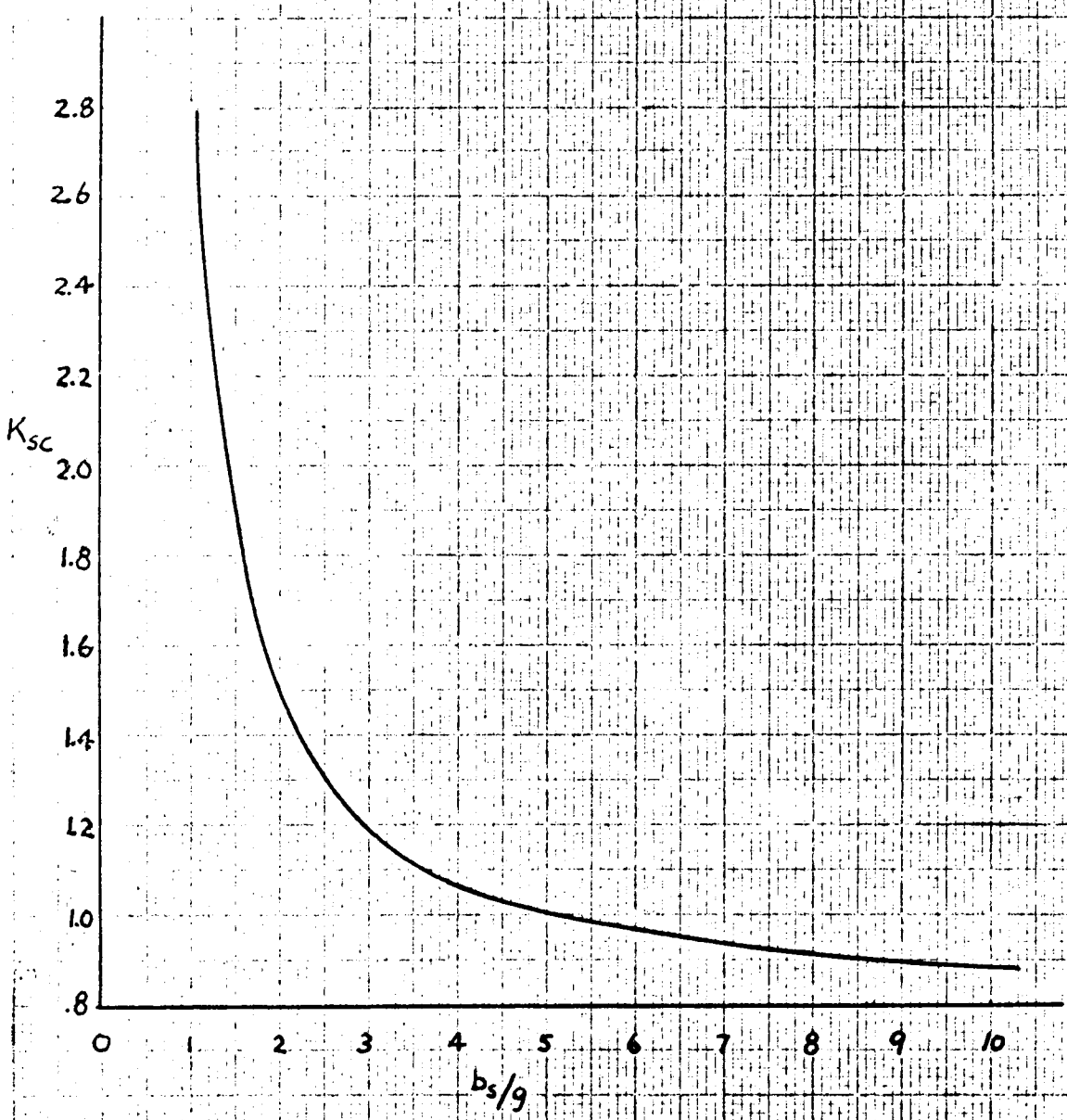

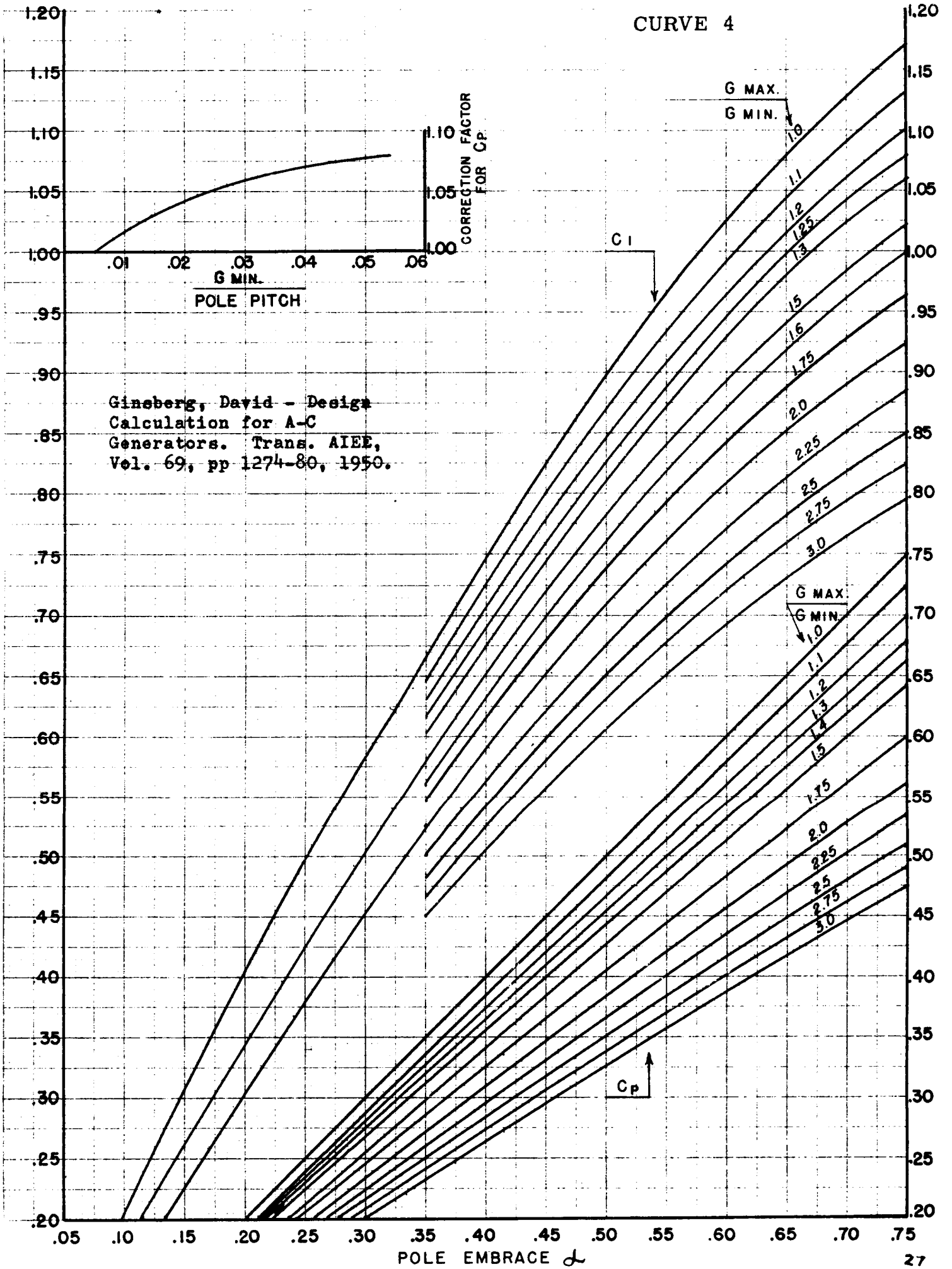
CURVE 4
G MAX.
G MIN.
1.0
1.1
1.2
1.25
1.3
1.5
1.6
1.75
2.0
2.25
2.5
2.75
3.0
G MAX.
G MIN.
1.0
1.1
1.2
1.3
1.4
1.5
1.75
2.0
2.25
2.5
2.75
3.0
C1
Cp
CORRECTION FACTOR FOR Cp
1.10
1.05
1.00
.01
.02
.03
.04
.05
.06
G MIN.
POLE PITCH
Ginsberg, David - Design Calculation for A-C Generators. Trans. AIEE, Vol. 69, pp 1274-80, 1950.
1.20
1.15
1.10
1.05
1.00
.95
.90
.85
.80
.75
.70
.65
.60
.55
.50
.45
.40
.35
.30
.25
.20
.05
.10
.15
.20
.25
.30
.35
.40
.45
.50
.55
.60
.65
.70
.75
POLE EMBRACE α

CURVE 5

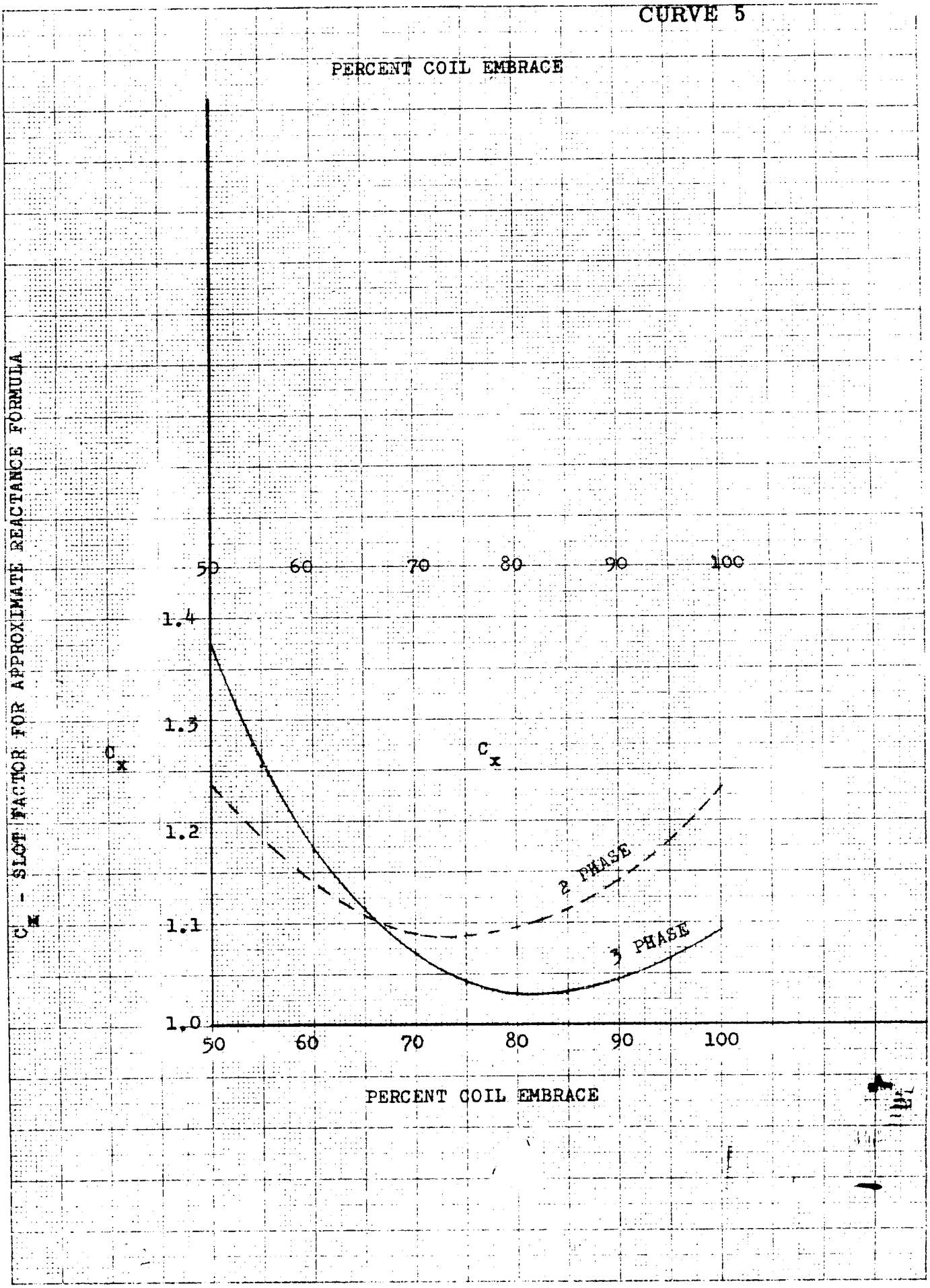

10 X 10 TO THE CM. 359-14
KEUFFEL & ESSER CO.

NO-LOAD DAMPER LOSS CURVE 7

$$D.L. = \frac{1.246 p n_b l_b P}{10^6 a_b}\left[\tau_s B_g K_p K_g\right]^2 \left[K_{f1}\left(\frac{K_{w1}}{2\lambda_s + \frac{\lambda_g}{K_{\phi 1}}}\right)^2 + K_{f2}\left(\frac{K_{w2}}{2\lambda_s + \frac{\lambda_g}{K_{\phi 2}}}\right)^2 \right]$$

= LOSS IN KW

a_b = BAR AREA IN SQ IN.

n_b = BARS/POLE

P = NO. POLES

l_b = LENGTH BAR IN.

$$\lambda_s = \frac{h_r}{b_r} + \lambda_t + \lambda_c$$

$$\lambda_g = \frac{\tau_b}{K_g g} = \frac{\tau_b}{g'}$$

K_g = CARTER'S COEFFICIENT (TOTAL)

$K_p = fn(b_s/g)$, CURVE (a) ($b_s = b_o$ for partially closed slots)

K_{f1} AND $K_{f2} = fn(f_s/\rho)$ CURVE (b)

ρ = DAMPER BAR RESISTIVITY (MICROHMS PER CU. IN.)

K_{w1} AND $K_{w2} = fn(b_s/\tau_s)$, CURVE (c_1) AND (c_2)

$K_{\phi 1}$ AND $K_{\phi 2} = fn(\tau_b/\tau_s)$, CURVE ($d_1$) AND ($d_2$)

$\lambda_t = fn(b_r/gK_g)$ CURVE (e)

B_g IS IN KILOLINES PER SQ INCH

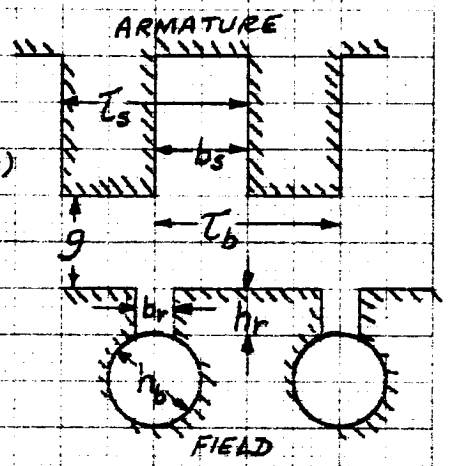

$$\lambda_c = \frac{.75}{K_{f1}} \text{ (FOR ROUND OR SQ. BARS)}$$

$$\lambda_c = \frac{h_b}{3 b_b K_{f1}} \text{ (FOR RECT. BARS)}$$

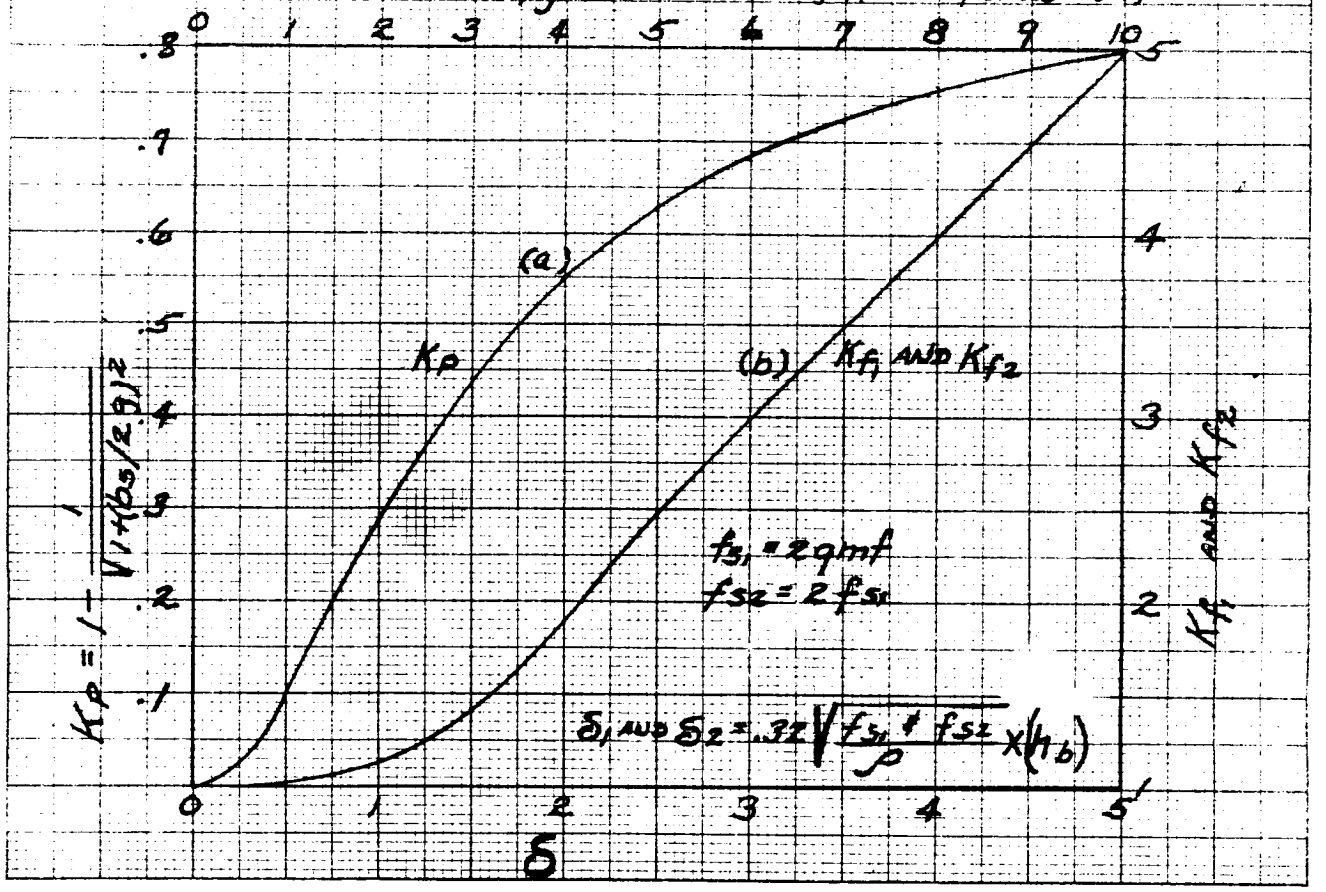

From E. I. Pollard "Calculation of No-Load Damper Winding Loss in Synchronous Machines", AIEE Vol. 51, 1932, pp 477-81.

10 × 10 to the ½ inch, 5th lines accented
MADE IN U. S. A.

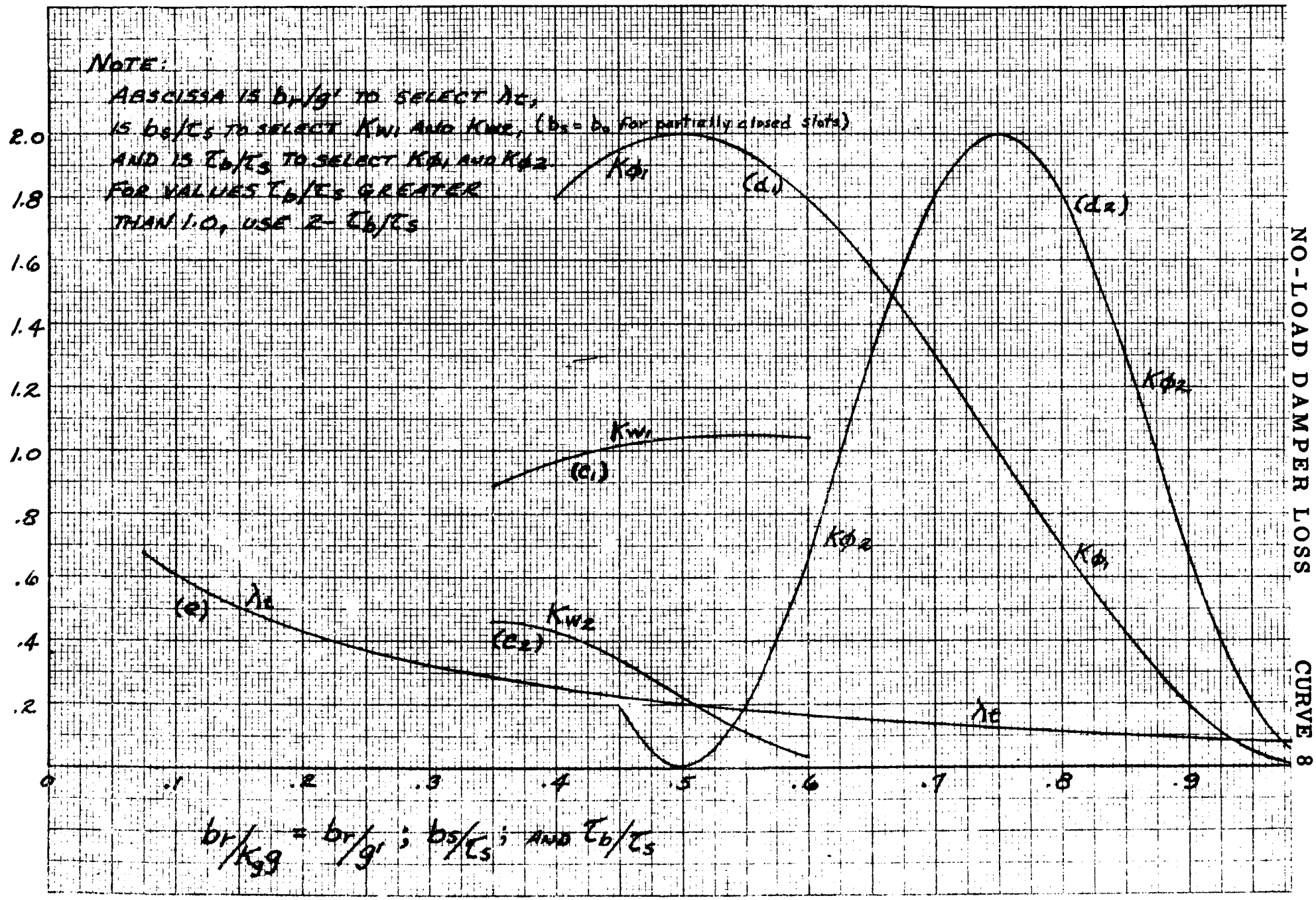

NO-LOAD DAMPER LOSS

CURVE 8

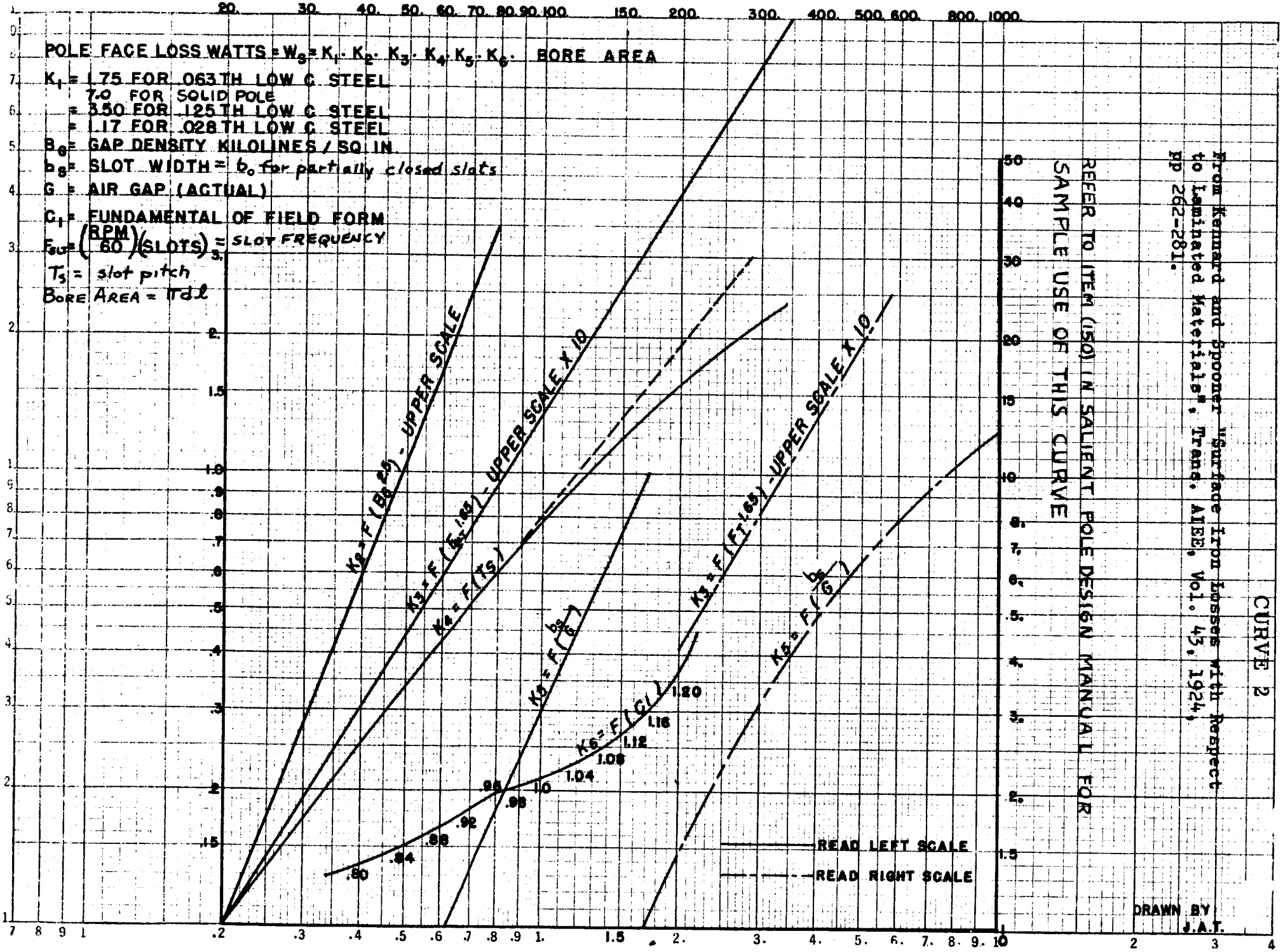

REFER TO ITEM (150) IN SALIENT POLE DESIGN MANUAL FOR SAMPLE USE OF THIS CURVE

From Kennard and Spooner "Surface Iron Losses with Respect to Laminated Materials", Trans. AIEE, Vol. 43, 1924, pp 262-281.

CURVE 2

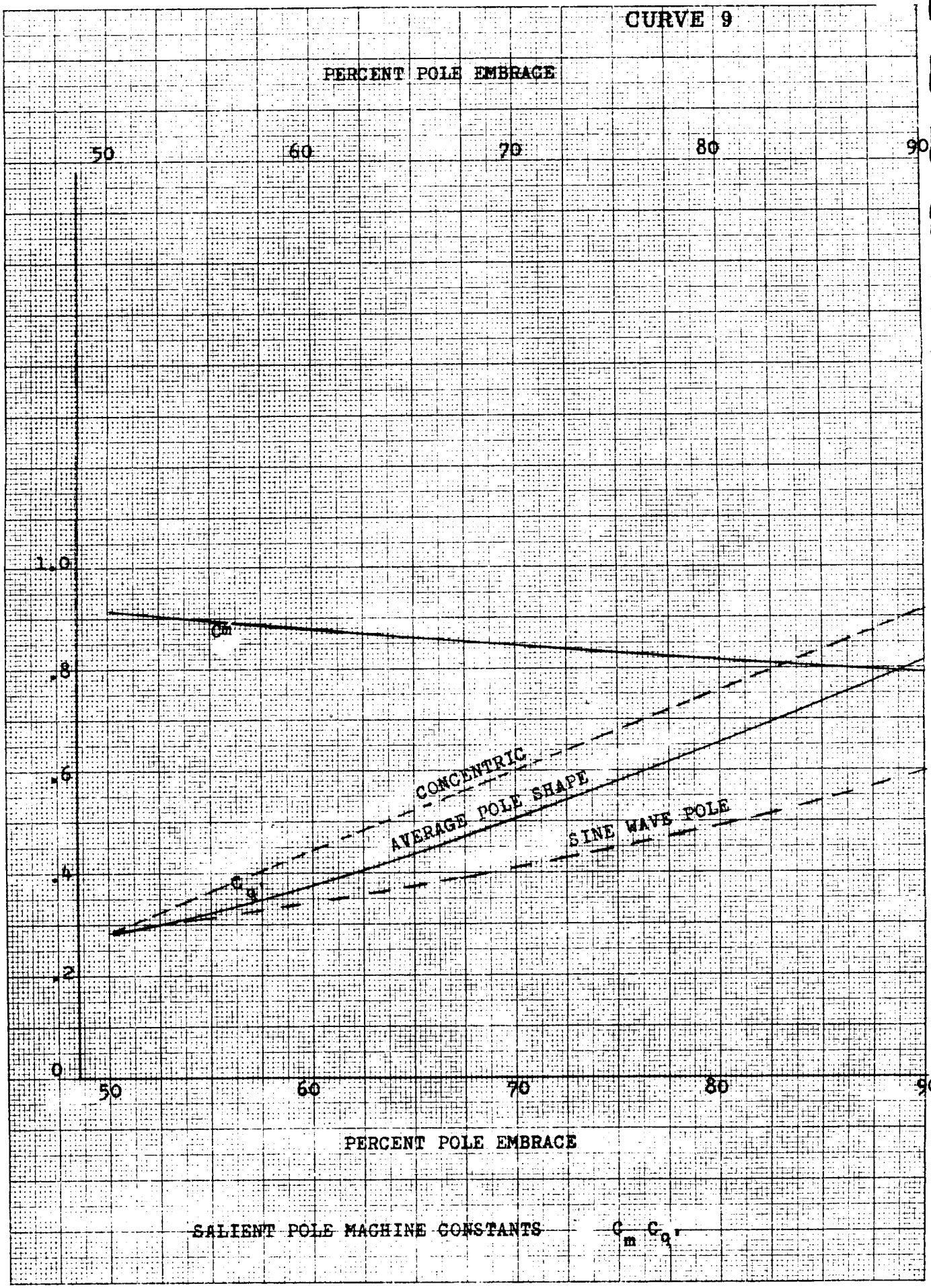

SALIENT POLE MACHINE CONSTANTS — C_m C_q.

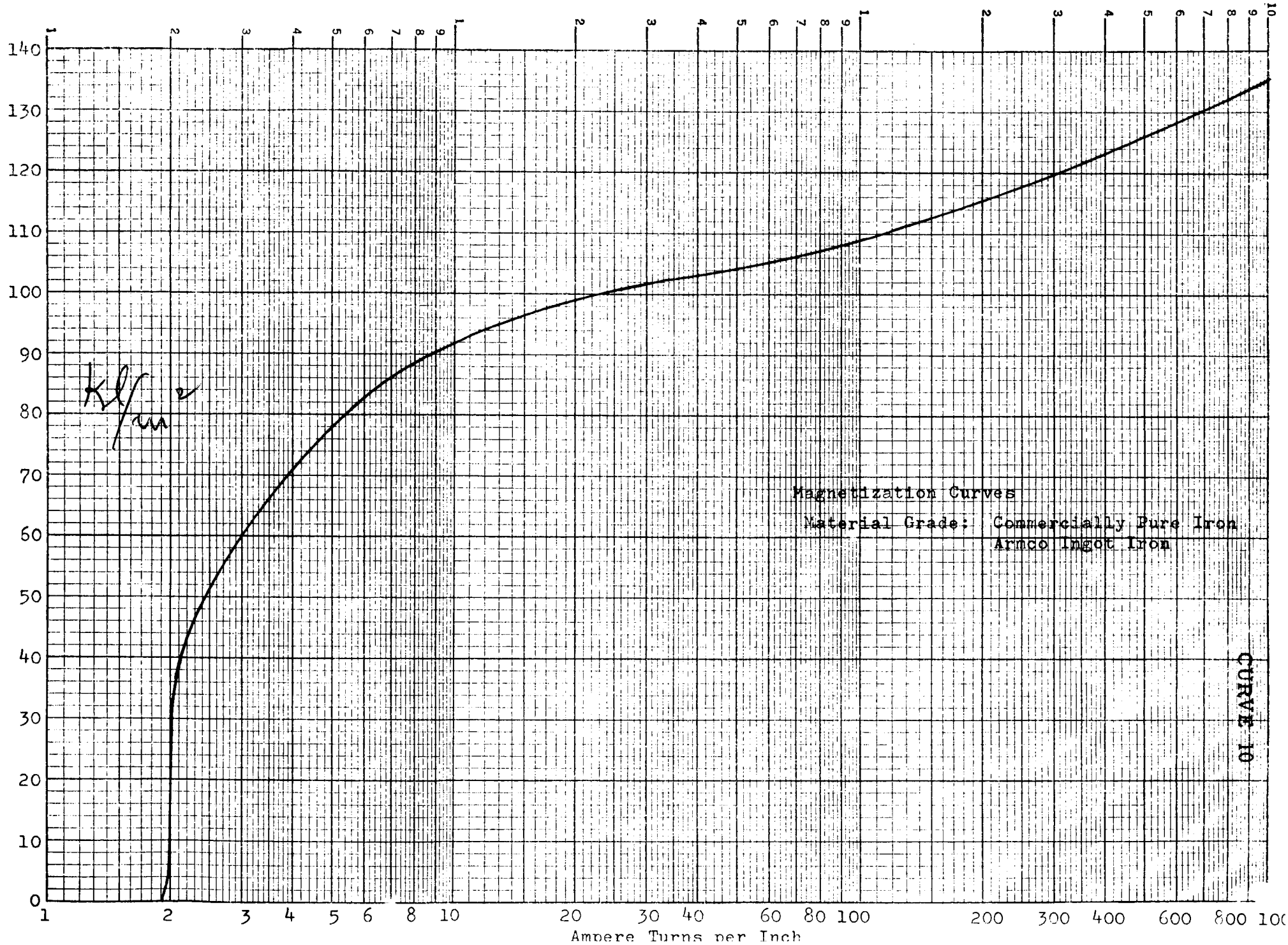
Magnetization Curves
Material Grade: Commercially Pure Iron
Armco Ingot Iron
CURVE 10
Ampere Turns per Inch
kl/m²
0
10
20
30
40
50
60
70
80
90
100
110
120
130
140
1
2
3
4
5
6
8
10
20
30
40
60
80
100
200
300
400
600
800

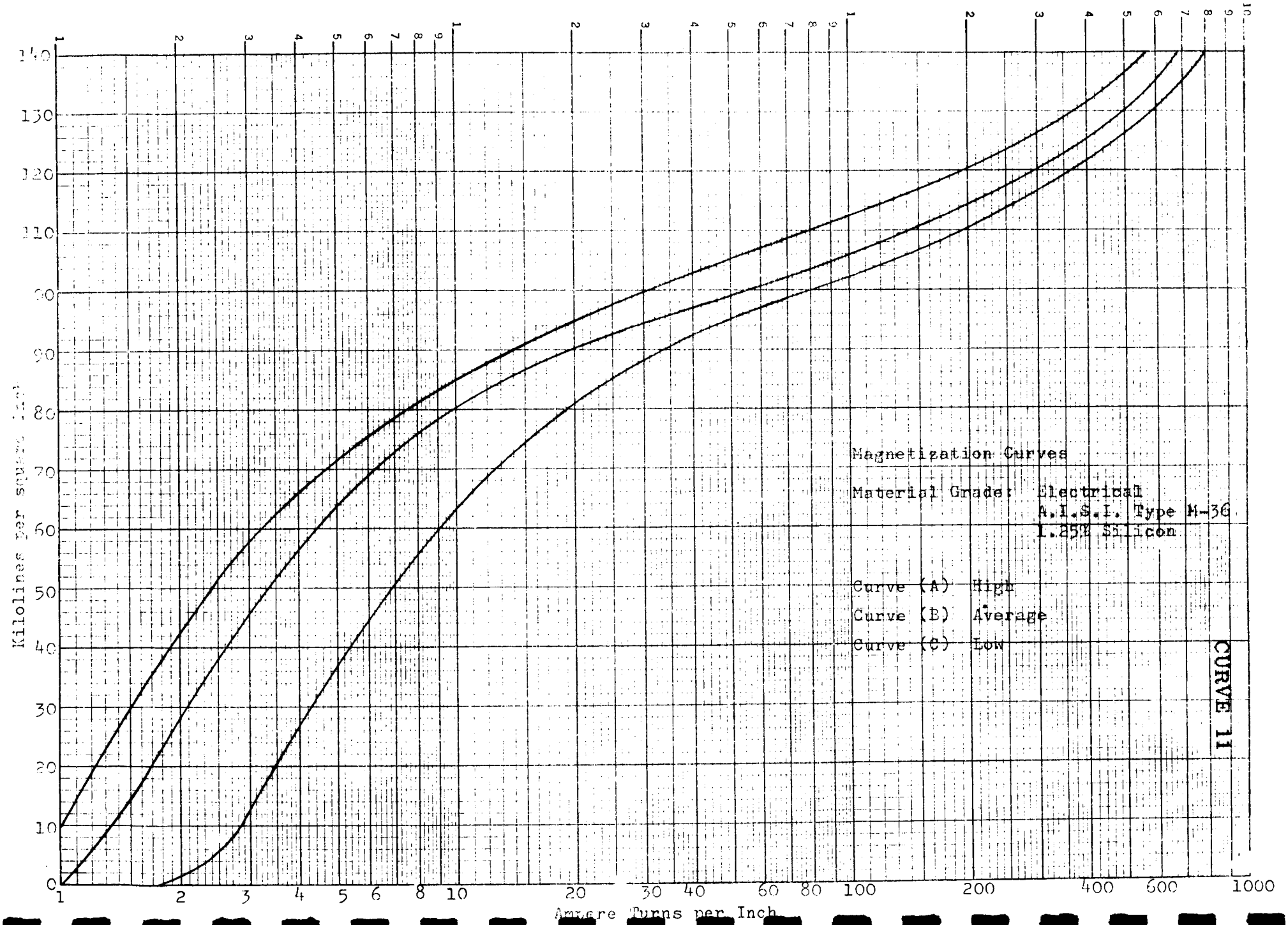
Magnetization Curves
Material Grade: Electrical
A.I.S.I. Type M-36
1.25% Silicon
Curve (A) High
Curve (B) Average
Curve (C) Low
Kilolines per square inch
Ampere Turns per Inch
0
10
20
30
40
50
60
70
80
90
100
110
120
130
140
1
2
3
4
5
6
8
10
20
30
40
60
80
100
200
400
600
1000

CURVE 11

KEUFFEL & ESSER CO. MADE IN U.S.A.
3 CYCLES X 70 DIVISIONS

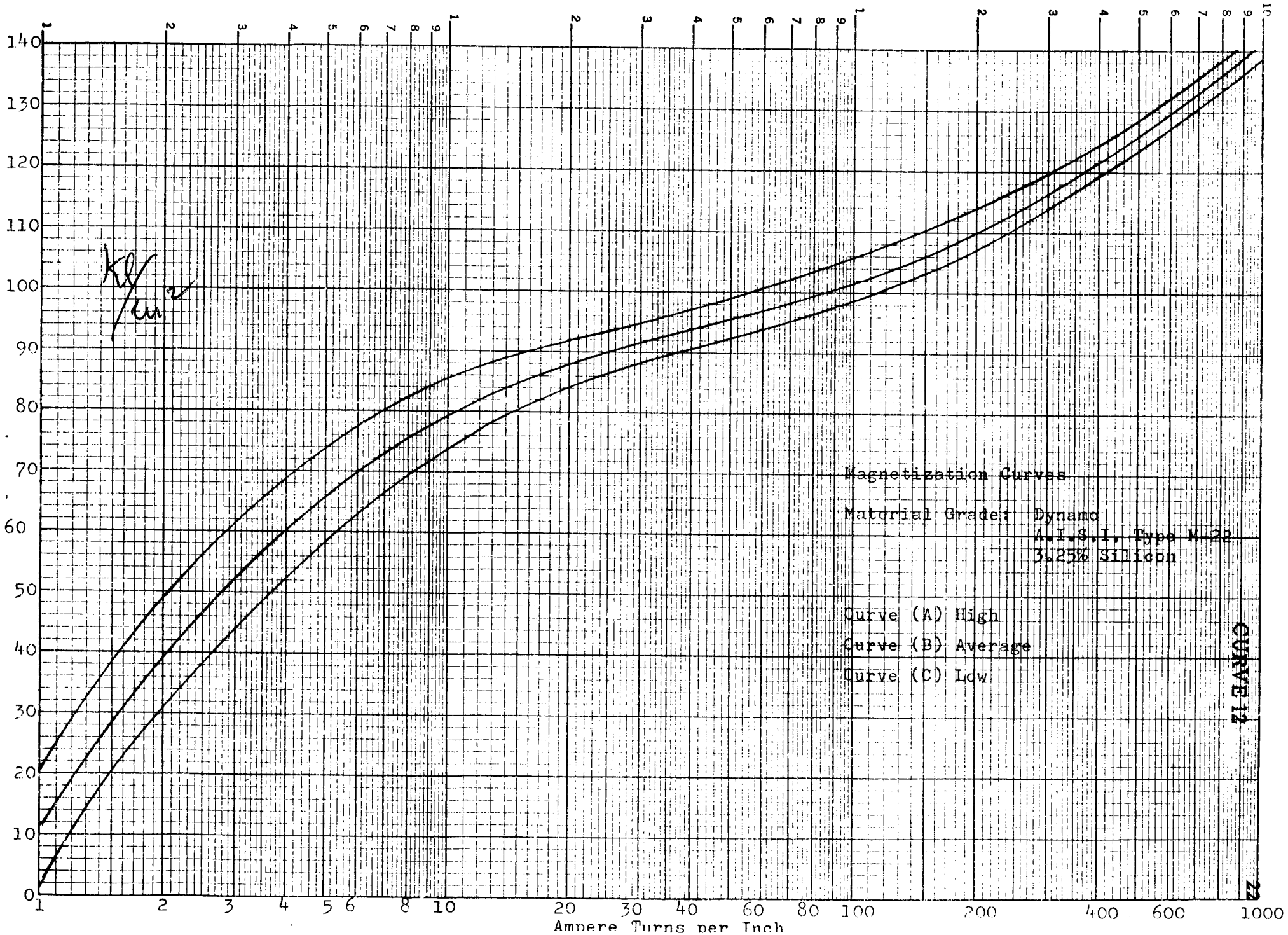

CURVE 12

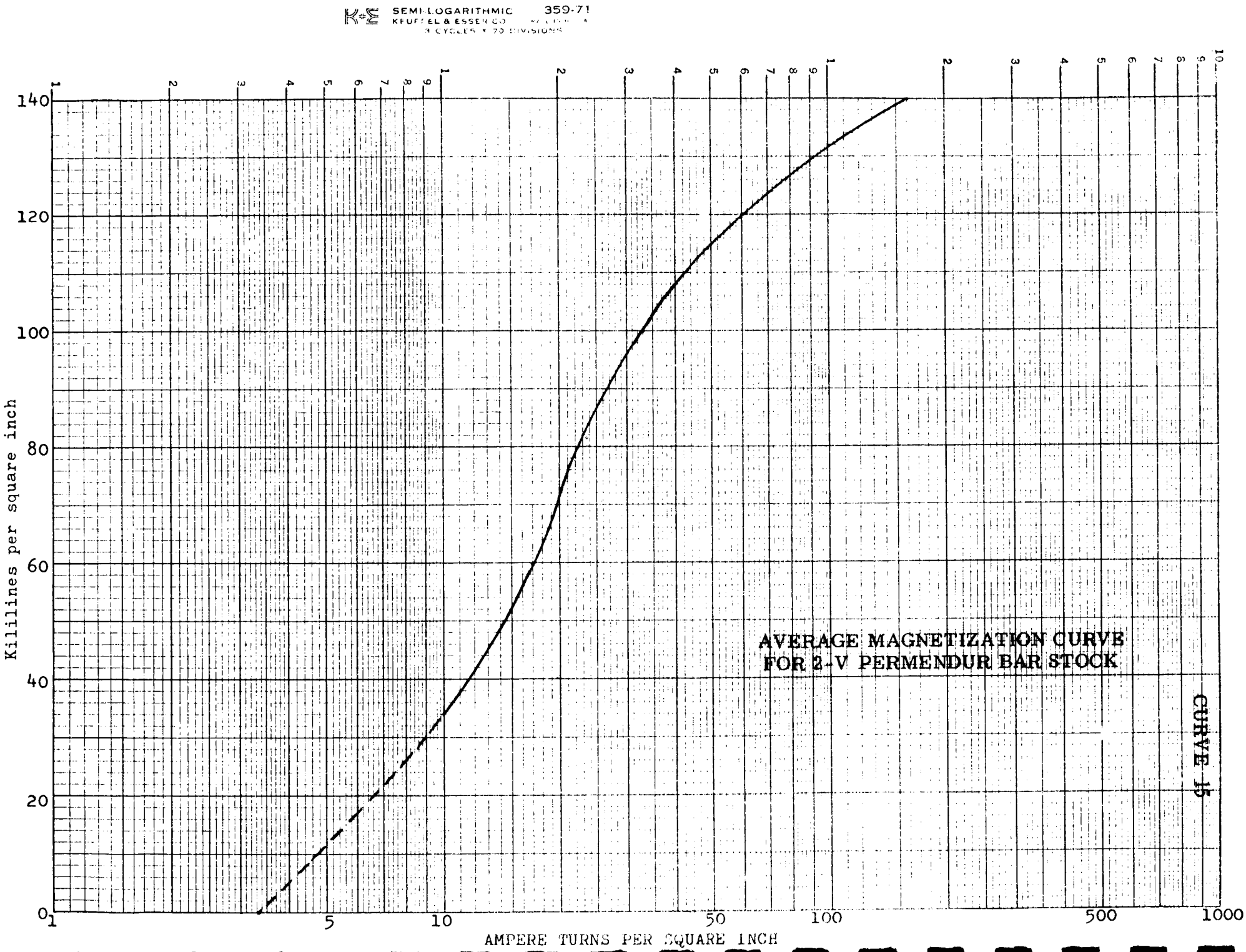
SEMI-LOGARITHMIC 359-71
KEUFFEL & ESSER CO.
3 CYCLES X 70 DIVISIONS
Kilolines per square inch
0
20
40
60
80
100
120
140
1
5
10
50
100
500
1000
AMPERE TURNS PER SQUARE INCH
AVERAGE MAGNETIZATION CURVE
FOR 2-V PERMENDUR BAR STOCK
CURVE 15

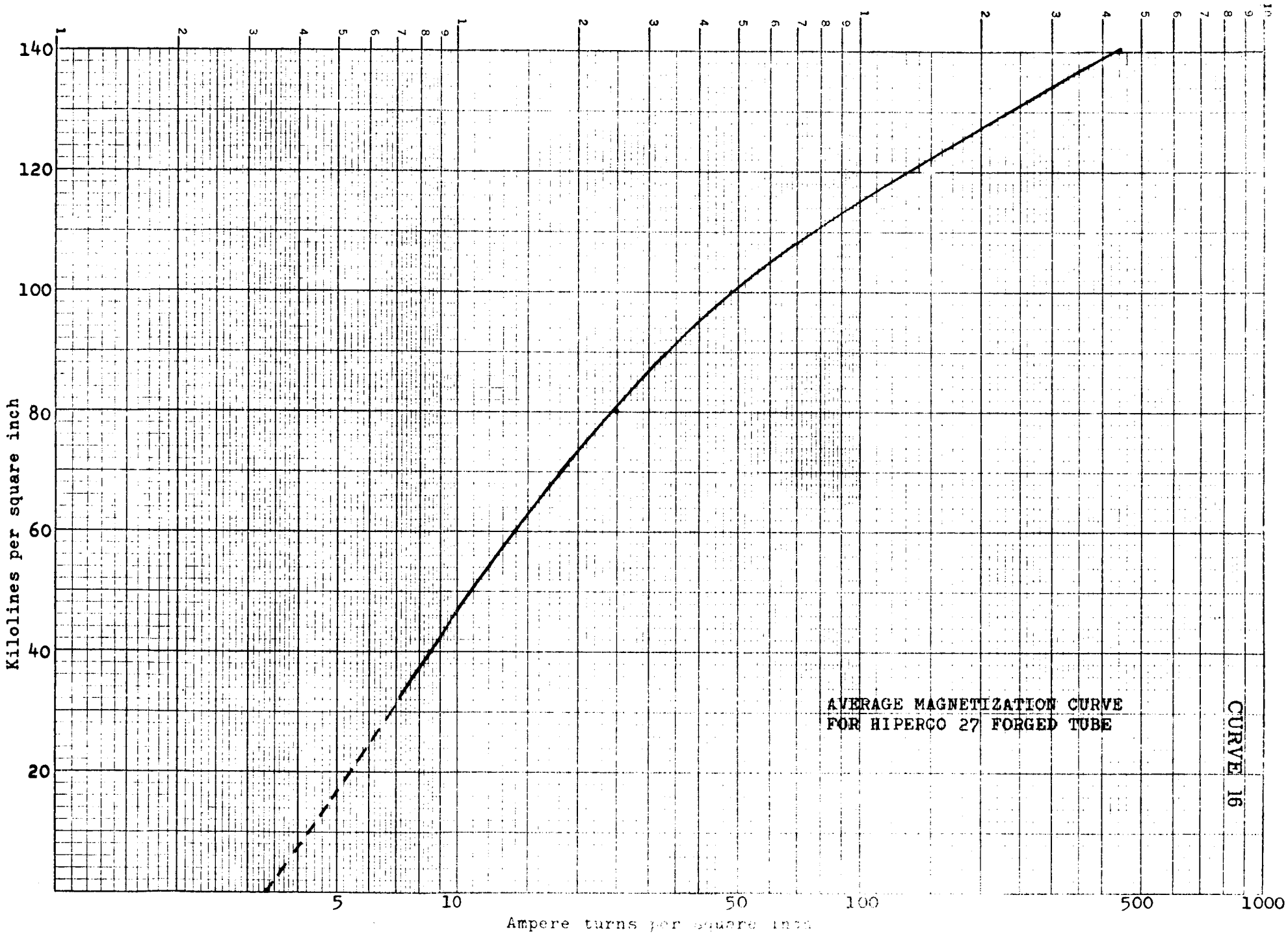
SEMI-LOGARITHMIC 359-71
KEUFFEL & ESSER CO.
1 CYCLES X 70 DIVISIONS
Kilolines per square inch
140
120
100
80
60
40
20
5
10
50
100
500
1000
Ampere turns per square inch
AVERAGE MAGNETIZATION CURVE
FOR HIPERCO 27 FORGED TUBE
CURVE 16

CURVE 17

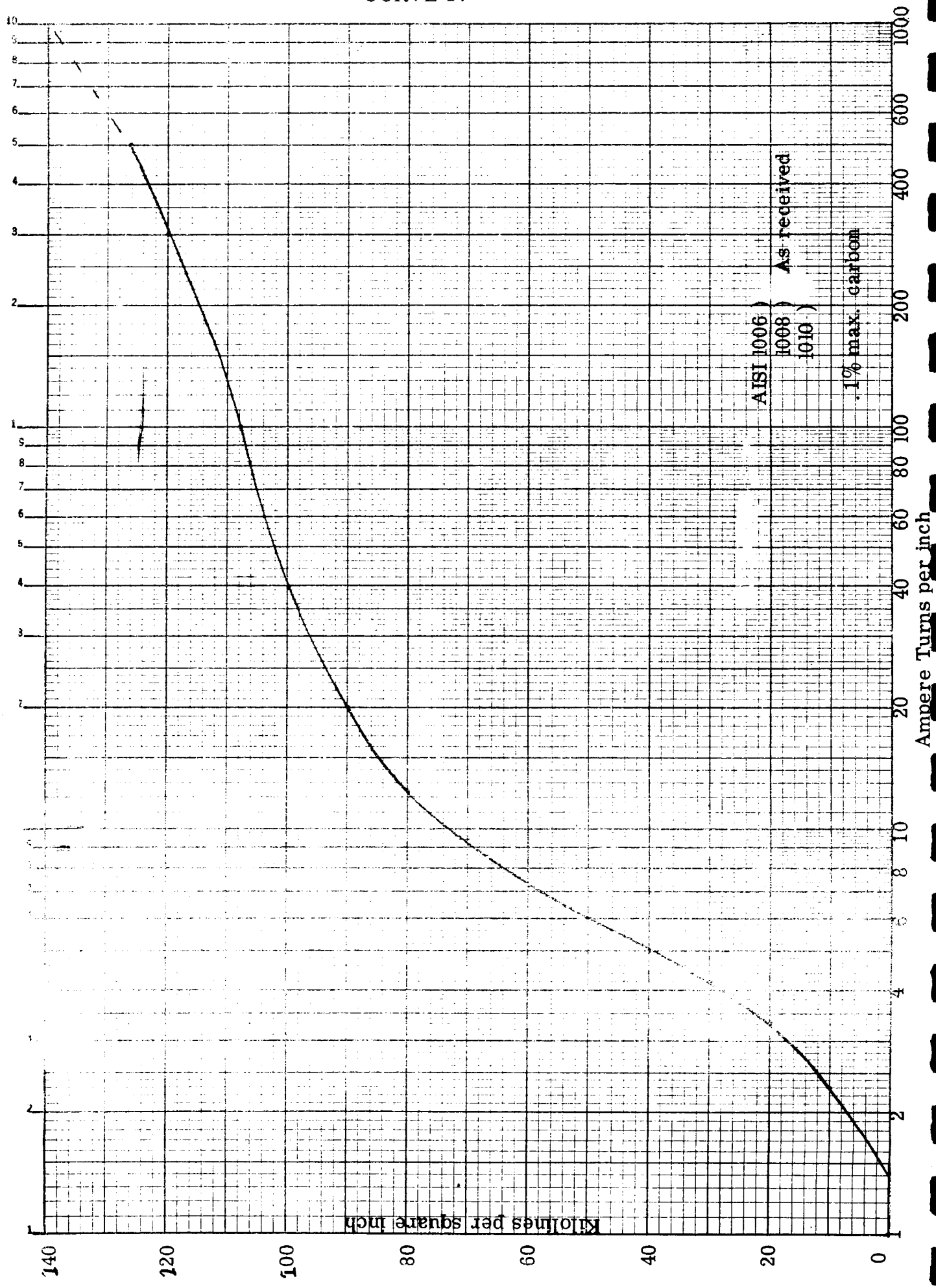
AISI 1006)
1008)
1010)
As received
.1% max. carbon
Ampere Turns per inch
Kilolines per square inch
0
20
40
60
80
100
120
140
1
2
4
8
10
20
40
60
80
100
200
400
600
1000

TWO-COIL LUNDELL (BECKY-ROBINSON TYPE)

Calculation Number	Electrical Symbol	Fortran Symbol	Explanation
		A, a	
(128)	A	A	Ampere conductors per inch
(46)	a_c	AC	Conductor area of stator winding
(144)	a_{cd}	ACD	Conductor area of damper bar
(153)	a_{cf}	AS	Conductor area of field coil
(170)	a_{dr}	AD	Damper bar end ring area
(68)	A_g	GA	Main gap area
(70)	A_{g2}	A2	Auxiliary air gap (g2) area
(70a)	A_{g3}	A3	Auxiliary air gap (g3, area
(79)	a_{np}	ANP	North pole area
(79b)	a_{sk}	ASK	Area of rotor skirt
(79a)	a_{sp}	ASP	Area of south pole
(124)	A_{y2}	AY2	Cross sectional area of coil yoke
(112)	A_{y4}	AY4	Area of shaft
		B, b	
(20)	B	BK	Density
(135)	b_{bo}	WO	Width of damper slot opening
(135)	b_{bl}	B	Width of rectangular damper bar slot
(22)	b_o	BO	Width of stator slot opening
(94)	B_c, B_c'	BC1	Stator core density N.L.

Calculation Number	Electrical Symbol	Fortran Symbol	Explanation
(95)	B_g, B_g'	BG1	Main air gap density (N. L.)
(122)	B_{g2}	BG2	Auxiliary gap (g2) density (N. L.)
(119)	B_{g3}	BG3	Auxiliary gap (g3) density (N. L.)
(224)	B_{g2FL}	BG2L	Density in auxiliary gap (g2) (F. L.)
(230)	B_{g3FL}	BG3L	Density in auxiliary gap (g3) (F. L.)
(116)	b_{NP}	BNP	North pole density (N. L.)
(76)	$b_{NP(END)}$	BNE	Width of north pole at end of pole
(76)	$b_{NP(MID)}$	BNM	Width of north pole at middle of pole
(234)	B_{NPFL}	BNPL	North pole density (F. L.)
(22)	b_s	BS	Stator slot dimension per Fig. 1
(222)	B_{SKFL}	BSK	Density in rotor skirt (F. L.)
(105)	B_{SP}	BSP	South pole density (N. L.)
(215)	B_{SPFL}	BSPL	South pole density (F. L.)
(76)	$b_{SP(END)}$	BSE	Width of south pole at end of pole
(76)	$b_{SP(MID)}$	BSM	Width of south pole at middle of pole
(57a)	$b_{t1/3}$	SM	Stator tooth width 1/3 distance from narrowest end
(91)	B_T, B_T'	BT1	Stator tooth density (N. L.)
(205)	B_{TL}	BTL	Stator tooth density (F. L.)
(57)	b_{tm}	TM	Stator tooth width 1/2 distance from narrowest end

Calculation Number	Electrical Symbol	Fortran Symbol	Explanation
(15)	b_v	BV	Radial duct width
(125)	B_{y2}	BY2	Coil yoke density
(228)	B_{y2FL}	BY2L	Density in coil yoke (F. L.)
(113)	B_{y4}	BY4	Density in shaft (N. L.)
(232)	B_{y4FL}	BY4L	Density in shaft (F. L.)
	C, c		
(32)	c	C	Parallel paths
(71)	C_1	C1	Ratio of maximum fundamental of field form to the actual maximum of the field form
(74)	C_M	CM	Demagnetizing factor
(73)	C_P	CP	Pole constant
(75)	C_q	CQ	Cross magnetizing factor
(72)	C_W	CW	Winding constant
	D, d		
(12)	D	DU	Stator lamination outside diameter
(11)	d	DI	Stator lamination inside diameter
(35)	d_b	DB	Diameter of bender pin
(170)	d_{dr}	DDR	Damper bar end ring mean diameter
(78)	d_{ir}	DIR	Inside diameter of rotor tube
(11a)	d_r	DR	Outside rotor diameter

Calculation Number	Electrical Symbol	Fortran Symbol	Explanation
		E, e	
(3)	E	EE	Line volts
(55)	EF_{TOP}	ET	Eddy factor top
(56)	EF_{BOT}	EB	Eddy factor bottom
(238)	E_{FFL}	EPFL	Full load field volts
(127b)	E_{FNL}	EPNL	No load field volts
(4)	E_{PH}	EP	Phase volts
		F, f	
(5a)	f	F	Frequency
(98)	F_c, F_c'	FC	N. L. stator core ampere turns
(201)	F_{CL}	FCL	F. L. stator core ampere turns
(236)	F_{FL}	FFL	Total full load ampere turns
(96)	F_g, F_g'	FG	N. L. main gap ampere turns
(208a)	F_{gL}	FGL	F. L. main gap ampere turns
(123)	F_{g2}	FG2	N. L. gap (g2) ampere turns
(225)	F_{g2FL}	FG2L	F. L. gap (g2) ampere turns
(120)	F_{g3}	FG3	N. L. gap (g3) ampere turns
(231)	F_{g3FL}	FG3L	F. L. gap (g3) ampere turns
(117)	F_{NP}	FNP	N. L. north pole ampere turns
(127)	F_{NL}	FNL	Total no load ampere turns

Calculation Number	Electrical Symbol	Fortran Symbol	Explanation
(235)	F_{NPFL}	FNPL	F.L. north pole ampere turns
(180)	F_{SC}	FSC	Short circuit ampere turns
(223)	F_{SKFL}	FSK	F.L. rotor skirt ampere turns
(107)	F_{SP}	FSP	N.L. south pole ampere turns
(216)	F_{SPFL}	FSPL	F.L. south pole ampere turns
(97)	F_T, F_T'	FT	N.L. stator tooth ampere turns
(206)	F_{TL}	FTL	F.L. stator tooth ampere turns
(183)	F & W	WF	Friction and windage
(126)	F_{y2}	FY2	N.L. coil yoke ampere turns
(229)	F_{y2FL}	FY2L	F.L. coil yoke ampere turns
(231)	F_{y3FL}	FG3L	F.L. coil yoke base ampere turns
(114)	F_{y4}	FY4	N.L. shaft ampere turns
(233)	F_{y4FL}	FY4L	F.L. shaft ampere turns
	G, g		
(59)	g	GC	Main air gap
(59a)	g_2	GP	Auxiliary air gap
(59c)	g_3	G3	Auxiliary air gap
(59d)	g_{3-1}	G2	Horizontal section of stepped gap g3
(59e)	g_{3-2}	G1	Vertical section of stepped gap g3
(59f)	g_{3e}	G4	Effective value of stepped gap g3
(69)	g_e	GE	Effective main gap

Calculation Number	Electrical Symbol	Fortran Symbol	Explanation
		H, h	
(135)	h_{bo}	HD	Height of damper slot
(135)	h_{b1}	H	Height of damper bar section
(24)	h_c	HC	Depth below slot
(78)	h_{NP}	HNP	Height of north pole
(38)	h'_{ST}	SD	Distance between center line of strand in depth
(39)	h_{ST}	SH	Stator coil strand thickness (largest dimension)
(78)	h_y	YH	Height of coil yoke
		I, i	
(237)	I_{FFL}	AIFL	F.L. field current
(127a)	I_{FNL}	AINL	N.L. field current
(8)	I_{PH}	PI	Phase current
(182)	$I^2 R_F$	FEL	N.L. field coil loss
(241)	$I^2 R_{FL}$	FCUL	F.L. coil copper loss
(194)	$I^2 R$	PS	N.L. stator copper loss
(245)	$I^2 R_S$	SCUL	F.L. stator copper loss
		K, k	
(19)	k	WL	Watts/lb core loss
(9a)	K_c	CK	Adjustment factor
(43)	K_d	DF	Distribution factor

Calculation Number	Electrical Symbol	Fortran Symbol	Explanation
(63)	K_e	EK	Leakage reactive factor
(16)	K_i	SF	Stacking factor
(44)	K_p	CF	Pitch factor
(67)	K_s	CC	Carter coefficient
(42)	K_{SK}	FS	Skew factor
(2)	K_{VA}	VA	Generator rating
(61)	K_X	FF	Factor to account for difference in phase current in coil sides in same slot
	L, l		
(13)	ℓ	CL	Gross core length (stator)
(80a)	ℓ_1	PL1	Length of leakage path 1
(81a)	ℓ_2	PL2	Length of leakage path 2
(82a)	ℓ_3	PL3	Length of leakage path 3
(83)	ℓ_4	PL4	Length of leakage path 4 (4 pole)
(83)	ℓ_{4a}		Length of leakage path 4 (6 pole)
(85)	ℓ_6	PL6	Length of leakage path 6
(86)	ℓ_7	AL7	Length of leakage path 7
(139)	ℓ_b	SB	Damper bar length
(84)	ℓ_c	PLC	Length of leakage path 5
(48)	L_E	EL	Stator coil end extension length
(36)	ℓ_{e2}	CE	Coil extension beyond core

Calculation Number	Electrical Symbol	Fortran Symbol	Explanation
(161)	L_F	SI	Field inductance
(78)	ℓ_{g2}	GP2	Horizontal length of (g2) air gap
(76)	ℓ_{NP}	PNL	Length of north pole
(17)	ℓ_s	SS	Solid core length
(76)	ℓ_{SP}	PSL	Length of south pole
(49)	ℓ_t	HM	1/2 mean turn (stator coil)
(147)	ℓ_{tf}	FE	1/2 mean turn of field coil
(78)	ℓ_y	ALY	Length of field coil yoke
(78)	ℓ_{y4}	Y4	Effective length of shaft
		M, m	
(5)	m	PN	No. of phases
		N, n	
(138)	n_b	BN	Damper bars
(146)	N_F	PT	Field turns per coil
(45)	n_e	EC	Effective conductors
(30)	n_s	SC	Conductors per slot
(34)	N_{ST}	SN	Strands per conductor in depth
(34a)	N'_{ST}	SN1	Strands per conductor (total)
(14)	n_v	HV	Radial ducts

Calculation Number	Electrical Symbol	Fortran Symbol	Explanation
		P, p	
(6)	p	PX	No. of poles
(9)	PF	PF	Power factor
(80)	P_1	P1	Pole head end leakage permeance
(81)	P_2	P2	Pole head side leakage permeance
(82)	P_3	P3	Pole body end leakage permeance
(83)	P_4	P4	Pole body side leakage permeance
(84)	P_5	P5	Coil leakage to north pole permeance
(85)	P_6	P6	Coil leakage to south pole permeance
(86)	P_7	P7	Stator core to rotor skirt leakage permeance
		Q, q	
(23)	Q	QQ	No. of slots
(25)	q	QN	Slots per pole per phase
		R, r	
(154)	$R_{f(cold)}$	FK	Cold field resistance at 20 ^{o}C
(155)	$R_{f(hot)}$	FR	Hot field resistance at X ^{o}C
(7)	RPM	RPM	Revolutions per minute
(53)	$R_{SPH(cold)}$	RG	Stator resistance per phase at 20 ^{o}C
(54)	$R_{SPH(hot)}$	RP	Stator resistance per phase at X ^{o}C

Calculation Number	Electrical Symbol	Fortran Symbol	Explanation
		S, s	
(181)	SCR	SCR	Short circuit ratio
(127c)	S_F	CD	Current density in field conductor
(47)	S_S	S	Current density in stator conductor
		T, t	
(177)	T_a	TA	Armature time constant
(178)	T'_d	T5	Transient time constant
(176)	T'_{do}	TC	Open circuit time constant
(78)	T_{SK}	TSK	Thickness of rotor skirt
(78)	T_{SP}	TSP	Thickness of south pole
		V, v	
(145)	V_r	VR	Peripheral speed
		W, w	
(185)	W_C	WQ	Stator core loss
(244)	W_{DFL}	WDL	F.L. damper loss
(193)	W_{DNL}	WD	N.L. damper loss
(186)	W_{NPL}	WN	N.L. pole face loss
(243)	W_{PFL}	WNL	F.L. pole face loss
(242)	W_{TFL}	WTFL	F.L. stator teeth loss
(184)	W_{TNL}	WT	N.L. stator teeth loss

Calculation Number	Electrical Symbol	Fortran Symbol	Explanation
	X, x		
(129)	X	XR	Reactance factor
(131)	X_{ad}	XD	Reactance direct axis
(132)	X_{aq}	XQ	Reactance quadrature axis
(142)	X_D ^oC	T3	Damper bar expected F.L. temperature
(157)	X'_d	XS	Saturated transient reactance
(168)	X''_d	XX	Subtransient reactance direct axis
(163)	X_{Dd}	X1	Damper bar leakage reactance direct axis
(165)	X_{Dq}	X2	Damper bar leakage reactance quadrature axis
(166)	X'_{du}	XU	Unsaturated transient reactance
(160)	X'_F	XF	Effective field leakage reactance
(150)	X_f ^oC	T2	Expected field temperature at full load
(130)	X_ℓ	XL	Leakage reactance
(169)	X''_q	XY	Subtransient reactance quadrature axis
(134)	X_q	XB	Synchronous reactance quadrature axis
(50)	X_s ^oC	TI	Stator expected temperature at F.L.
(170)	X_2	XN	Negative sequence reactance
(172)	X_o	XO	Zero sequence reactance

Calculation Number	Electrical Symbol	Fortran Symbol	Explanation
		Y, y	
(31)	y	YY	Throw or coil span
(100)	$\phi_{\ell 1}$	F1	N. L. leakage flux in Path 1
(101)	$\phi_{\ell 2}$	F2	N. L. leakage flux in Path 2
(102)	$\phi_{\ell 3}$	F3	N. L. leakage flux in Path 3
(103)	$\phi_{\ell 4}$	F4	N. L. leakage flux in Path 4
(118)	$\phi_{\ell 5}$	PL5	N. L. leakage flux in Path 5
(121)	$\phi_{\ell 6}$	PL6	N. L. leakage flux in Path 6
(99)	$\phi_{\ell 7}$	PL7	N. L. leakage flux in Path 7
(209)	ϕ_{IL}	Q1	F. L. leakage flux in Path 1
(210)	ϕ_{2L}	Q2	F. L. leakage flux in Path 2
(211)	ϕ_{3L}	Q3	F. L. leakage flux in Path 3
(212)	ϕ_{4L}	Q4	F. L. leakage flux in Path 4
(226)	ϕ_{5L}	QL5	F. L. leakage flux in Path 5
(220)	ϕ_{6L}	Q6	F. L. leakage flux in Path 6
(207)	ϕ_{7L}	Q7	F. L. leakage flux in Path 7
(93)	ϕ_p	FQ	Flux per pole N. L.
(213)	ϕ_{PL}	FQL	Flux per pole F. L.
(90)	ϕ_T, $\dot{\phi}_T$	TG	Total flux N. L.
(208)	ϕ_{TL}	PTL	Total flux F. L.

Calculation Number	Electrical Symbol	Fortran Symbol	Explanation
	τ		
(140)	τ_b	TB	Damper bar pitch
(41)	τ_p	TP	Pole pitch
(26)	τ_s	TS	Stator slot pitch
(40)	τ_{SK}	SK	Stator slot skew
(27)	$\tau_{S\ 1/3}$	TT	Stator slot pitch 1/3 distance from narrowest section of tooth
	λ		
(158)	λ_b	BD	Damper bar permeance
(162)	λ_{Dd}	PU	Damper bar permeance direct axis
(164)	λ_{Dq}	PV	Damper bar permeance quadrature axis
(64)	λ_E	EW	End winding permeance
(159)	λ_{pt}	BE	Permeance of end portion of damper bar
	ρ		
(141)	ρ_D	RE	Resistivity of damper bar at 20 ^{o}C
(143)	$\rho_{D\ hot}$	RM	Resistivity of damper bar at expected temperature at F.L.
(151)	ρ_f	RR	Resistivity of field conductor at 20 ^{o}C
(152)	$\rho_{f\ (hot)}$		Resistivity of field conductor at expected temperature at F.L.
(51)	ρ_s	RS	Resistivity of stator winding at 20 ^{o}C

TWO-COIL LUNDELL (BECKY-ROBINSON TYPE)

COMPUTER DESIGN _____ (INPUT)

MODEL _____ EWO _____ DESIGN NO(1) _____

PARAMETERS	(2)	KVA	GENERATOR KVA	30.	1.095	RATIO MAX TO MIN OF FUND	(71)	C_1	CONSTANTS
	(3)	E	LINE VOLTS	211.	.43	WINDING CONSTANT	(72)	C_w	
	(4)	E_{ph}	PHASE VOLTS	121.	.678	POLE CONSTANT	(73)	C_p	
	(5)	m	PHASES	3.	4.15	END EXTENSION ONE TURN	(48)	LE	
	(5a)	f	FREQUENCY	400.	.855	DEMAGNETIZATION FACTOR	(74)	C_m	
	(6)	p	POLES	8.	.42	CROSS MAGNETIZING FACTOR	(75)	C_q	
	(7)	RPM	RPM	6000.	.658	POLE EMBRACE	(77)	α	
	(8)	I_{ph}	PHASE CURRENT	82.5	1.45	WIDTH OF NORTH POLE (END)	(76)	$b_{NP(END)}$	POLE
	(9)	PF	POWER FACTOR	.75	2.20	WIDTH OF SOUTH POLE (END)	(76)	$b_{SP(END)}$	
	(9a)	K_c	ADJ. FACTOR	1.0	2.20	WIDTH OF NORTH POLE (MID)	(76)	$b_{NP(MID)}$	
	(10)		OPTIONAL LOAD POINT	0.0	1.45	WIDTH OF SOUTH POLE (MID)	(76)	$b_{SP(MID)}$	
STATOR STACK	(11)	d	STATOR I.D.	7.060	2.4	LENGTH OF NORTH POLE	(76)	ℓ_{NP}	
	(12)	D	STATOR O.D.	9.150	2.4	LENGTH OF SOUTH POLE	(76)	ℓ_{SP}	
	(13)	ℓ	GROSS CORE LENGTH	2.6	7.0	ROTOR DIAMETER	(11a)	d_r	
	(14)	n_v	NO. OF DUCTS	0.0	1.92	HEIGHT OF NORTH POLE	(78)	h_{NP}	
	(15)	b_v	WIDTH OF DUCT	0.0	7.0	POLE FACE LOSS FACTOR	(187)	(K_1)	
	(16)	K_i	STACKING FACTOR (STATOR)	.92	.030	WIDTH OF SLOP OPENING	(135)	b_{bo}	DAMPER BAR
	(19)	k	WATTS/LB.	15.0	.030	HEIGHT OF SLOT OPENING	(135)	h_{bo}	
	(20)	B	DENSITY	77.	.050	DAMPER BAR DIA. OR WIDTH	(136)	( )	
STATOR SLOT	(21)		TYPE OF SLOT	2.	.170	RECTANGULAR BAR THICKNESS	(137)	h_{b1}	
	(22)	b_o	SLOT OPENING	.03	.05	RECTANGULAR SLOT WIDTH	(135)	b_{b1}	
	(22)	b_1	SLOT WIDTH TOP	.117	5.0	NO. OF DAMPER BARS/POLE	(138)	n_b	
	(22)	b_2		0.0	5.65	DAMPER BAR LENGTH	(139)	ℓ_b	
	(22)	b_3		0.0	.28	DAMPER BAR PITCH	(140)	τ_b	
	(22)	b_s	SLOT WIDTH	.117	.694	RESISTIVITY OF DAMP. BAR @20°	(141)	ρ_D	
	(22)	h_o		.030	285.	DAMPER BAR TEMP °C	(142)	X °C	
	(22)	h_1		.400	6.87	DAMPER BAR END RING MEAN DIA	(170)	d_{dr}	
	(22)	h_2		0.0	.0396	DAMPER BAR END RING AREA	(170)	a_{dr}	
	(22)	h_3		.00	170.	NO. OF FIELD TURNS/COIL	(146)	N_F	FIELD
	(22)	h_s	SLOT DEPTH	.500	13.5	MEAN LENGTH OF FLD. TURN	(147)	ℓ_t	
	(22)	h_t		0.0	1.125	FLD. COND. DIA. OR WIDTH	(148)		
	(22)	h_w		.038	.006	FLD. COND. THICKNESS	(149)		
	(23)	Q	NO. OF SLOTS	108.0	315.0	FLD. TEMP IN °C	(150)	X_f°C	
STATOR WINDING	(28)		TYPE OF WDG.	1.	1.15	RESISTIVITY OF FIELD COND @20°	(151)	ρ_f	
	(29)		TYPE OF COIL	1.	0.0	NO LOAD SAT.	(87)		
	(30)	n_s	CONDUCTORS/SLOT	2.	0.0	FRICTION & WINDAGE	(183)	(F&W)	
	(31)	y	SLOTS SPANNED	9.					
	(32)	c	PARALLEL CIRCUITS	1.					
	(33)		STRAND DIA. OR WIDTH	.19					
	(34)	N_{st}	STRANDS/CONDUCTOR IN DEPTH	1.0					
	(34a)	N'_{st}	STRANDS/CONDUCTOR	1.					
	(39)		STATOR STRAND T'KNS.	.063					
	(35)	d_b	DIA. OF PIN	.25					
	(36)	ℓ_{e2}	COIL EXT. STR. PORT	.25					
	(37)	h_{st}	UNINS. STRD. HT.	.190					
	(38)	h'_{st}	DIST. BTWN. C L OF STD.	0.0					
	(42a)		PHASE BELT ANGLE	60.0					
	(40)	τ_{sk}	STATOR SLOT SKEW	.001					
	(50)	X °C	STATOR TEMP °C	285.					
	(51)	ρ_s	RES'TVY STA. COND. @ 20° C	.694					
AIR GAP	(59b)		TYPE OF 93	1.0					
	(59)	g	MAIN AIR GAP	.030					
	(59a)	g_2	AUX GAP	.01					
	(59f)	g_{3E}	EFFECTIVE 93	.01					

STATOR SLOT	POLE
DAMPER SLOT	REMARKS

DESIGNER _____ DATE _____

TWO-COIL LUNDELL (BECKY-ROBINSON TYPE)

COMPUTER DESIGN _ _ _ _ _ _ _ _ _ _ (INPUT)

MODEL _____ EWO _____ DESIGN NO(1) _____

PERMEANCE	(80)	P_1	PERM OF LEAKAGE PATH 1	0.0
	(81)	P_2	PERM OF LEAKAGE PATH 2	0.0
	(82)	P_3	PERM OF LEAKAGE PATH 3	0.0
	(83)	P_4	PERM. OF LEAKAGE PATH 4	0.0
	(84)	P_5	PERM OF LEAKAGE PATH 5	0.0
	(85)	P_6	PERM OF LEAKAGE PATH 6	0.0
	(86)	P_7	PERM OF LEAKAGE PATH 7	0.0
	(80)	ℓ_1	LENGTH OF LEAKAGE PATH 1	1.18
	(80)	ℓ_2	LENGTH OF LEAKAGE PATH 2	.87
	(85)	ℓ_6	LENGTH OF LEAKAGE PATH 6	1.2
	(84)	ℓ_c	LENGTH OF LEAKAGE ACROSS COIL	1.24
ROTOR DIMENSIONS	(78)	d_{ir}	INSIDE DIA OF ROTOR TUBE	5.6
	(78)	d_Q	INSIDE DIA OF HOLLOW SHAFT	.66
	(78)	h_Y	HEIGHT OF COIL YOKE	1.24
	(78)	ℓ_Y	LENGTH OF COIL YOKE	.76
	(78)	ℓ_{SK}	LENGTH OF ROTOR SKIRT	.76
	(78)	ℓ_{Y4}	EFFECTIVE LENGTH OF SHAFT	1.5
	(78)	ℓ_{g2}	HORIZONTAL LENGTH OF GAP g2	.76
	(78)	T_{SP}	THICKNESS OF SOUTH POLE	.8
	(78)	T_{SK}	THICKNESS OF ROTOR SKIRT	.8
GAP g3 DIMENSIONS	(78)	d_{to}	TAPERED GAP DIMENSIONS	0.0
	(78	d_{t1}		0.0
	(78)	d_{s1}	STEPPED GAP DIMENSIONS	1.22
	(78)	d_{s2}		1.90
	(78)	d_{s3}		2.54
	(78)	d_{s4}		0.0
	(78)	d_{s5}		0.0
	(78)	ℓ_{s1}	STEPPED GAP HORIZONTAL LENGTHS	.657
	(78)	ℓ_{s2}		.657
	(78)	ℓ_{s3}		.657
	(78)	ℓ_{s4}		0.0
	(78)	ℓ_{s5}		0.0
	(78)	d_{os}	EFFECTIVE SHAFT O.D.	3.16
	(243)	W_{PHR}	POLE FACE HARMONIC LOSS	0.0
	(244)	W_{DHR}	DAMPER BAR HARMONIC LOSS	0.0
	(157)		WEIGHT OF ROTOR IRON	0.0
MATERIAL	(18)		STATOR LAM. MTR'L.	CURVE 12
	(18)		SOUTH POLE, TUBE & SKIRT	CURVE 16
	(18)		NORTH POLE, SPIDER & SHAFT	CURVE 15
	(18)		COIL YOKE	CURVE 15

TWO-COIL LUNDELL (BECKY-ROBINSON TYPE)

SUMMARY OF DESIGN CALCULATIONS - - - - - - - - (OUTPUT)

MODEL NO. _____ EWO _____ DESIGN NO. _____

STATOR	(17) (ℓ_s)	SOLID CORE LENGTH	2.39200	1.02895
	(24) (h_c)	DEPTH BELOW SLOT	.54500	.03086
	(26) (τ_s)	SLOT PITCH	.20539	1.09500
	(27) ($\tau_{s1/3}$)	SLOT PITCH 1/3 DIST. UP	.21509	.43000
	(42) (K_{sk})	SKEW FACTOR	1.00000	.67800
	(43) (K_d)	DIST. FACTOR	.95492	4.15000
	(44) (K_p)	PITCH FACTOR	.86609	.85500
	(45) (n_e)	EFF. CONDUCTORS	187.07614	.42000
	(46) (a_c)	CON D. AREA	.01184	695.77000
	(47) (S_s)	CURRENT DENSITY (STA.)	6964.30000	.93897
	(49) (ℓ_t)	1/2 MEAN TURN	6.75000	10.09522
	(53) (R_{ph})	COLD STA. RES. @20° C	.02847	122.63436
	(54) (R_{ph})	HOT STA. RES. @ X°C	.05827	55.01501
	(55) (EF_{top})	EDDY FACTOR TOP	1.22960	132.72958
	(56) (EF_{bot})	EDDY FACTOR BOT	1.03240	65.11023
	(62) (λ_i)	STATOR COND. PERM.	4.99360	425.97320
	(63) (λ_e)	END PERM.	5.75770	.22362
	(65) ( )	WT. OF STA COPPER	5.54410	27.36432
	(66) ( )	WT. OF STA IRON	13.73600	5.19697
	(41) (τ_p)	POLE PITCH	2.77280	436.06842
	(157) (-)	WT OF ROTOR IRON	.00000	383.74021
	(145) (V_p)	PERIPHERAL SPEED	11004.00000	37.45954
FIELD	(153) (a_{cF})	FLD COND. AREA	.00675	15.29219
	(154) (R_F)	COLD FLD RES @ 20°C	.39100	20.54119
	(155) (R_F)	HOT FLD RES @ X°C	.84652	1.76872
	(156) (-)	WT OF FLD COPPER	4.97260	2634.60000
TIME CONST	(176) (T_{do})	OPEN CIR. TIME CONST.	.28595	223.27000
	(177) (T_a)	ARM TIME CONST.	.00421	45.68600
	(178) (T'_d)	TRANS TIME CONST.	.82680	103.96000
	(179) (T''_d)	SUB TRAN TIME CONST.	.00500	85.63700
PERMEANCE	(80) (P_1)	PERM OF LEAKAGE PATH 1	40.13900	62.80600
	(81) (P_2)	PERM OF LEAKAGE PATH 2	85.33700	13.24300
	(82) (P_3)	PERM OF LEAKAGE PATH 3	58.54000	442.08000
	(83) (P_4)	PERM OF LEAKAGE PATH 4	182.22000	1534.15030
	(84) (P_5)	PERM OF LEAKAGE PATH 5	23.88500	.91698
	(85) (P_6)	PERM OF LEAKAGE PATH 6	36.79600	
	(86) (P_7)	PERM OF LEAKAGE PATH 7	22.16300	

CARTER COEFFICIENT	(67)	(K_s)
EFFECTIVE AIR GAP	(69)	(g_e)
RATIO MAX FUND.	(71)	(C_1)
WINDING CONST.	(72)	(C_w)
POLE CONST.	(73)	(C_p)
END. EXT. ONE TURN	(48)	(L_E)
DEMAGNETIZING FACTOR	(74)	(C_M)
CROSS MAGNETIZING FCTR	(75)	(C_q)
AMP COND/IN	(128)	(A)
REACTANCE FACTOR	(129)	(X)
LEAKAGE REACTANCE	(130)	(X_ℓ)
REACTANCE DIRECT AXIS	(131)	(X_{ad})
REACTANCE QUAD AXIS	(132)	(X_{aq})
SYN REACT DIRECT AXIS	(133)	(X_d)
SYN REACT QUAD AXIS	(134)	(X_q)
FIELD LEAKAGE REACT	(160)	(X'_f)
FIELD SELF INDUCTANCE	(161)	(L_f)
LEAKAGE REACT DIRECT AX.	(163)	(X_{Dd})
LEAKAGE REACT QUAD AX.	(165)	(X_{Dq})
UNSAT. TRANS. REACT	(166)	(X'_{du})
SAT. TRANS. REACT	(167)	(X'_d)
SUB. TRANS REACT DIRECT AX.	(168)	(X''_d)
SUB. TRANS REACT QUAD AX.	(169)	(X''_q)
NEG SEQUENCE REACT	(170)	(X_2)
ZERO SEQUENCE REACT	(172)	(X_0)
TOTAL FLUX	(90)	(ϕ'_T)
FLUX PER POLE	(93)	(ϕ'_p)
GAP DENSITY (MAIN)	(95)	(B'_g)
TOOTH DENSITY	(91)	(B'_T)
CORE DENSITY	(94)	(B'_c)
TOOTH AMPERE TURNS	(97)	(F'_t)
CORE AMPERE TURNS	(98)	(F'_c)
GAP AMPERE TURNS (MAIN)	(96)	(F'_g)
SHORT CIR NI	(180)	(FSC)
SHORT AIR RATIO	(181)	(SCR)

CONSTANTS

REACTANCE

MAGNETIZATION

VARIABLE LOAD — PERCENT LOAD	0		100	150	200	OPTIONAL
(B_{NP}) (116) N.P. DENSITY	62.968	(B_{NPFL}) (234)	90.819	103.810	117.870	
(B_{SP}) (105) S.P. DENSITY	76.907	(B_{SPFL}) (215)	102.720	116.030	130.180	
(B_{Y2}) (125) COIL YOKE DENSITY	73.110	(B_{Y2FL}) (228)	105.440	120.530	136.860	
(B_{Y4}) (113) SHAFT DENSITY	72.568	(B_{Y4FL}) (232)	106.070	121.240	137.670	
(B_{g3}) (119) AUX GAP (g_3) DENSITY	30.125	(B_{g3FL}) (230)	43.450	49.668	56.395	
(B_{g2}) (122) AUX GAP (g_2) DENSITY	41.508	(B_{g2FL}) (224)	57.173	65.069	73.558	
(F_{NL}) (127) TOTAL NI	1406.800	(F_{FL}) (236)	2745.000	3479.600	4385.900	
(I_{FNL}) (127a) FIELD AMPERES	8.275	(I_{FFL}) (237)	16.147	20.468	25.799	
(S_F) (127c) CUR. DEN. FLD.	1225.900	( ) (239)	2392.100	3032.300	3822.100	
(E_{FNL}) (127b) FIELD VOLTS	7.005	(E_{FFL}) (238)	13.669	17.327	21.839	
(W_c) (185) STA CORE LOSS	295.540	(W_c) (185)	295.540	295.540	295.540	
(W_{TNL}) (184) STA TOOTH LOSS	156.930	(W_{TFL}) (242)	257.329	365.232	510.755	
(W_{dNL}) (193) DAMPER LOSS	.027	(W_{dFL}) (244)	.067	.071	.074	
(I^2R_s) (194) STATOR CU LOSS	.000	(I^2R_s) (245)	1189.963	1784.945	2379.927	
(—) (195) EDDY LOSS	.000	(—) (246)	155.885	233.827	311.770	
(W_{PNL}) (186) POLE FACE LOSS	197.050	(W_{PFL}) (243)	238.463	252.405	261.530	
(I^2R_F) (182) FIELD COIL LOSS	53.553	(I^2R_F) (241)	441.418	709.280	1126.867	
(F&W) (183) F&W LOSS	658.960	(F&W) (183)	658.960	658.960	658.960	
(—) (196) TOTAL LOSSES	1362.060	(—) (247)	3237.628	4300.263	5545.425	
(—) (—) PERCENT EFF	.000	(—) (251)	87.401	88.680	89.011	
(		(				

REMARKS

DESIGNER
DATE

TWO-COIL LUNDELL (BECKY-ROBINSON TYPE)

NO LOAD SATURATION OUTPUT SHEET

ITEMS / VOLTS	(3) (E) Volts (125) B_{y2} Coil yoke	(95) B'_g Density Main gap (105) B_{SP} Density S. P.	(122) B_{g2} Density g2 (116) B_{NP} Density N. P.	(119) B_{g3} Density g3 (113) B_{y4} Shaft density	(94) B_c Density Stator core (93) $\emptyset'_P$ Flux per pole	(91) B'_T Density Stator tooth (127) F_{NL} Total NI
80%	168.80000 57.14238	36.53040 60.21276	32.42266 49.21551	23.54603 56.78554	68.47527 178.53424	83.13275 1015.92030
90%	189.90000 64.65303	41.10238 68.09763	36.68989 55.68427	26.64086 64.22996	77.04533 200.87879	93.53727 1173.37650
100%	211.00000 73.11561	45.68795 76.91285	41.51155 62.97291	30.12794 72.57350	85.64086 223.28973	103.97271 1406.94120
110%	232.10000 81.91592	50.27786 86.05598	46.53098 70.55242	33.75419 81.23396	94.24453 245.72192	114.41804 1670.84960
120%	253.20000 92.86159	54.89966 97.29131	52.80304 79.97969	38.26445 91.91632	102.90799 268.30995	124.93594 2115.06860
130%	274.30000 106.53195	59.55786 111.16922	60.67270 91.75368	43.89744 105.15264	111.63966 291.07587	135.53667 2810.30000
140%	MACHINE SATURATED					
150%						
160%						

INPUT PARAMETERS 1

30.	211.	121.	3.	400.	8.	6000.	82.5	.75	1.
0.0	7.060	9.150	2.6	0.0	0.0	.92	15.	77.	2.
.03	.117	0.0	0.0	.117	.030	.400	0.0	.00	.500
0.0	.038	108.0	1.	1.	2.	9.	1.	.19	1.0
1.	.063	.25	.25	.190	0.	60.	.001	285.	.694
1.0	.030	.01	.015	1.095	.43	.678	4.15	.855	.42
.658	1.45	2.20	2.20	1.45	2.4	2.4	7.0	1.92	7.
.030	.030	.050	.170	.05	5.	5.65	.28	.694	285.
6.87	.0396	170.	13.5	1.125	.006	315.	1.15	0.	0.

INPUT PARAMETERS 2

							1.18	.87	1.2
1.24	5.6	.66	1.24	.76	.76	1.5	.76	.8	.8
		1.22	1.90	2.54			.657	.657	.657
		3.16							

SATURATION CURVE VALUES (STATOR)

140.	10.	1.	38.	1.9	59.
3.8	75.	7.6	86.	16.	93.
35.	100.	90.	107.	160.	118.
230.	140.	950.			

SATURATION CURVE VALUES (NORTH POLE AND SHAFT)

143.	0.	3.3	55.	12.0	80.
24.0	95.	40.0	109.	72.0	135.
300.0	143.	500.			

SATURATION CURVE VALUES (SOUTH POLE AND TUBE)

150.	0.	3.	34.	10.	57.
16.	85.	24.	103.	35.	125.
70.	137.	130.	145.	260.	148.
600.	150.	1500.			

SATURATION CURVE VALUES (YOKE)

150.	0.	3.	34.	10.	57.
16.	85.	24.	103.	35.	125.
70.	137.	130.	145.	260.	148.
600.	150.	1500.			

TWO-COIL LUNDELL (BECKY-ROBINSON TYPE)

(1)	--	DESIGN NUMBER - To be used for filing purposes
(2)	KVA	GENERATOR KVA
(3)	E	LINE VOLTS
(4)	E_{PH}	PHASE VOLTS - For 3 phase, Y [redacted] connected generator $E_{PH} = \frac{(\text{Line Volts})}{\sqrt{3}} = \frac{(3)}{\sqrt{3}}$ For 3 phase, Δ [redacted] connected generator E_{PH} = (Line Volts) = (3)
(5)	m	PHASES - Number of
(5a)	f	FREQUENCY - In cycles per second
(6)	P	POLES - Number of
(7)	RPM	SPEED - In revolutions per minute
(8)	I_{PH}	PHASE CURRENT - In amperes at rated load
(9)	P.F.	POWER FACTOR - Given in per unit
(9a)	K_c	ADJUSTMENT FACTOR - When P.F. = 0. to .95 set $K_c = 1.$; when P.F. = .95 to 1. set K_c = 1.05
(10)	--	LOAD POINTS - The computer program is set up to have the 0.%, 100%, 150%, 200% load points as standard outputs. There is an additional space available on the output sheet for one optional load point. This optional

load point will be the designer's choice and can be selected anywhere in the range of 0 to 200% load. When an optional load calculation is required, insert the per unit load value on the input sheet. The optional load point will be calculated in addition to the standard points listed above. For example, insert .33 on the input sheet when the optional load calculation for 33% load is required in addition to the standard points.

If only the standard points are required, insert 0.0 on the input sheet and the optional load column will be blank.

(11) d STATOR PUNCHING I.D. - The inside diameter of the stator punching in inches.

(11a) d_r ROTOR O.D. - The outside diameter of the rotor in inches.

(12) D PUNCHING O.D. - The outside diameter of the stator punching in inches.

(13) GROSS STATOR CORE LENGTH - In inches.

(14) n_v RADIAL DUCTS - Number of.

(15) b_v RADIAL DUCT WIDTH - In inches.

(16) K_i STACKING FACTOR - This factor allows for the coating (core plating) on the punchings, the burrs due to slotting, and the deviations in flatness. Approximate values of K_i are given in Table IV.

THICKNESS OF LAMINATIONS (INCHES)	GAGE	K_i
.014	29	0.92
.018	26	0.93
.025	24	0.95
.028	23	0.97
.063	--	0.98
.125	--	0.99

TABLE IV

(17) ℓ_s SOLID CORE LENGTH - The solid length is the gross length times the stacking factor. If ventilating ducts are used, their length must be subtracted from the gross length also.

$$\ell_s = (K_i)\left[(\ell) - (n_v)\ (b_v)\right] = (16)\left[(13) - (14)\ (15)\right]$$

(18) MATERIAL - This input is used in selecting the proper magnetization curves for stator; tube, south pole and skirt; yoke; north pole, spider and shaft; when different materials are used. Separate spaces are provided on the input sheet for each section mentioned above. Where curves are available on card decks, used the proper identifying code. Where card decks are not available submit data in the following manner:

The magnetization curve must be available on semi-log paper. Typical curves are shown in this manual on Curves 15 and 16. Draw straight line segments through the curve starting with zero density. Record the coordinates of the points where the

straight line segments intersect. Submit these coordinates as input data for the magnetization curve. The maximum density point must be submitted first.

Refer to Figure below for complete sample

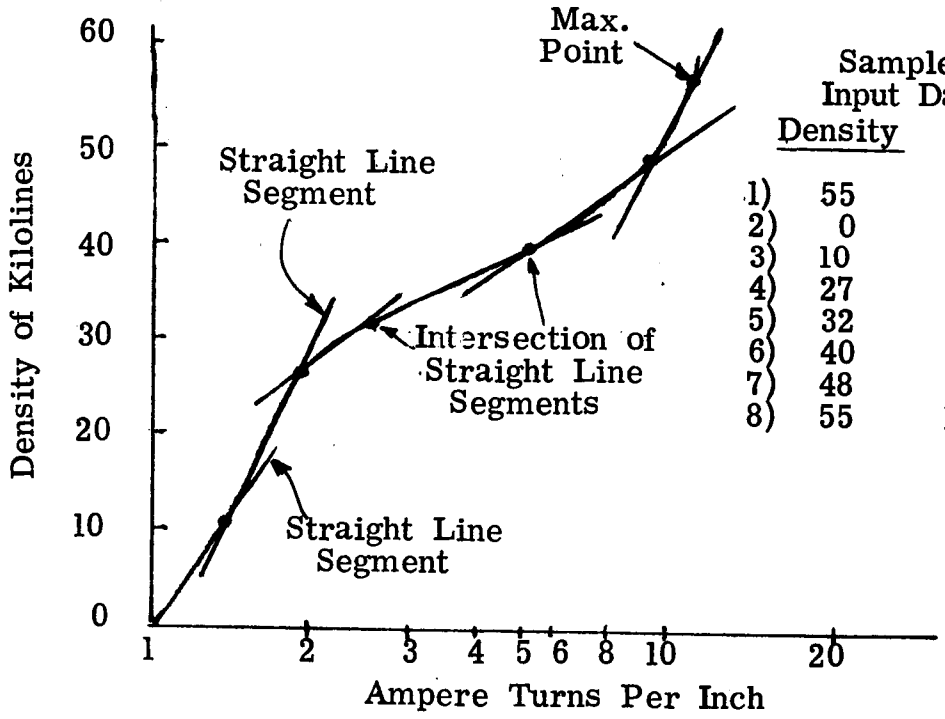

Sample Input Data

	Density	NI
1)	55	Max.
2)	0	0
3)	10	1.5
4)	27	1.9
5)	32	2.5
6)	40	4.9
7)	48	9.0
8)	55	12.0

(19) k WATTS/LB - Core loss per lb of stator lamination material. Must be given at the density specified in (20).

(20) B DENSITY - This value must correspond to the density used in Item (19) to pick the watts/lb. The density that is usually used is 77.4 kilolines/in^2.

(21)	1
	2
	3
	4
	5
		<u>TYPE OF STATOR SLOT</u> - Refer to Figure 1, Page for type of slot.
		For (a) slot use 1. as an input
		For (b) slot use 2. as an input
		For (c) slot use 3. as an input
		For (d) slot use 4. as an input
		Type 5. is not a slot but instead a particular situation for an open slot where the winding has only one conductor per slot.

(22)	b_0 b_1 b_2 b_3 b_s h_0 h_1 h_2 h_3 h_s h_t h_w	<u>ALL SLOT DIMENSIONS</u> - Given in inches per Figure 1 Where the dimension does not apply to the slot being used, insert 0. on input sheet. For slot type (c) $b_s = \frac{(b_1) + (b_3)}{2} = \frac{(22) + (22)}{2}$
(23)	Q	<u>STATOR SLOTS</u> - Number of.
(24)	h_c	<u>DEPTH BELOW SLOTS</u> - The depth of the stator core below the slots.

Due to mechanical strength reasons, h_c should never be less than 70% of h_s.

$$h_c = \frac{(D) - \left[(d) + 2(h_s)\right]}{2} = \frac{(12) - \left[(11) + 2(22)\right]}{2}$$

(25) q

SLOTS PER POLE PER PHASE

$$q = \frac{(Q)}{(P)\ (m)} = \frac{(23)}{(6)\ (5)}$$

(26) τ_s

STATOR SLOT PITCH

$$\tau_s = \frac{\pi(d)}{Q} = \frac{\pi(11)}{(23)}$$

(27) $\tau_{s1/3}$

STATOR SLOT PITCH - 1/3 distance up from narrowest section. For slot (a), (b), (c), and (e)

$$\tau_{s1/3} = \frac{\pi\left[(d) + .66(h_s)\right]}{(Q)} = \frac{\pi\left[(11) + .66\ (22)\right]}{(23)}$$

For slot (d)

$$\frac{\pi\left[(d) + 2(h_0) + 1.32(b_s)\right]}{(Q)} =$$

$$\frac{\pi\left[(11) + 2(22) + 1.32(22)\right]}{(23)}$$

(28) --

TYPE OF WINDING - Record whether the connection is "wye" of "delta". For "wye" conn use 1. for input. For "delta" use 0. for input.

(29) --

TYPE OF COIL - Record whether random wound or formed coils are used. For random wound coils use 0. for input. For formed coils use 1. for input.

(30)	n_S	CONDUCTORS PER SLOT - The actual number of conductors per slot. For random wound coils use a space factor of 75% to 80%. Where space factor is the percent of the total slot area that is available for insulated conductors after all other insulation areas have been subtracted out.
(31)	Y	THROW - Number of slots spanned. For example, with a coil side in slot 1 and the other coil side in slot 10, the throw is 9.
(31a)		PER UNIT OF POLE PITCH SPANNED - Ratio of the number of slots spanned to the number of slots in a pole pitch. This value must be between 1.0 and 0.5 to satisfy the limits of this program. $= \frac{(Y)}{(m)\ (q)} = \frac{(31)}{(5)\ (25)}$
(32)	C	PARALLEL PATHS, No. of - Number of parallel circuits per phase.
(33)	--	STRAND DIA. OR WIDTH - In inches. For round wire, use strand diameter. For rectangular wire, use strand width. This must be the largest of the two dimensions given for a rectangular wire.
(34)	N_{ST}	NUMBER OF STRANDS PER CONDUCTOR IN DEPTH - Applies to rectangular wire. In order to have a more flexible conductor and reduce eddy current loss, a stranded conductor is often used. For

example, when the space available for one conductor is .250 width x .250 depth, the actual conductor can be made up of 2 or 3 strands in depth as shown

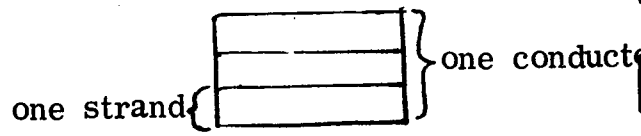

For a more detailed explanation refer to section titled "Effective Resistance and Eddy Factor" in the Derivations in Appendix.

(34a) N'_{ST} NUMBER OF STRANDS PER CONDUCTOR - This number applies to the strands in depth and/or width and is used in calculating the conductor area. Item (34) is different in that it deals with strands in depth only and is used in calculating eddy factors.

(35) d_b DIAMETER OF BENDER PIN - in inches - This pin is used in forming coils. Use .25 inch for stator O.D. $<$ 8 inches use .50 inches for stator O.D. $>$ 8 inches.

(36) ℓ_{e2} COIL EXTENSION BEYOND CORE in Inches - Straight portion of coil that extends beyond stator core.

(37) h_{ST} HEIGHT OF UNINSULATED STRAND in Inches - This value is the vertical height of the strand and is used in eddy factor calculations. Set this value = 0 for round wire.

(38) h'_{ST} DISTANCE BETWEEN CENTERLINES OF STRANDS IN DEPTH in inches.

(39)	--	STATOR COIL STRAND THICKNESS in inches - For rectangular conductors only. For round wire insert 0. on input sheet. This must be the narrowest dimension of the two dimensions given for a rectangular wire.
(40)	τ_{SK}	SKEW - Stator slot skew in inches at stator I.D.
(41)	τ_P	POLE PITCH in inches. $\tau_P = \frac{\pi(d)}{(P)} = \frac{\pi(11)}{(6)}$
(42)	K_{SK}	SKEW FACTOR - The skew factor is the ratio of the voltage induced in the coils to the voltage that would be induced if there were no skew. When $\tau_{SK} = 0$, $K_{SK} = 1$ $K_{SK} = \frac{\sin\left[\frac{\pi(\tau_{SK})}{2(\tau_P)}\right]}{\frac{\pi(\tau_{SK})}{2(\tau_P)}} = \frac{\sin\left[\frac{\pi(40)}{2(41)}\right]}{\frac{\pi(40)}{2(41)}}$
(42a)		PHASE BELT ANGLE - Input For phase belt angle = 60° insert 60 on input sheet. For phase belt angle = 120° insert 120 on input sheet.
(43)	K_d	DISTRIBUTION FACTOR - The distribution factor is the ratio of the voltage induced in the coils to the voltage that would be induced if the windings

were concentrated in a single slot. See Table 2 for compilation of distribution factors for the various harmonics.

For 60° phase belt angle and q = integer when (42a) = 60 and (25) = integer.

$$K_d = \frac{\text{Sin } 30^{o}}{(q)\ \text{Sin}\left[30/(q)\right]} = \frac{\text{Sin } 30^{o}}{(25)\,\text{Sin}\left[30/(25)\right]}$$

For 60° phase belt angle and (q) $\neq$ integer = N/B reduced to lowest terms.

When (43a) = 60 and (25) $\neq$ integer = N/B reduced to lowest terms

$$K_d = \frac{\text{Sin } 30^{o}}{(N)\ \text{Sin}\left[30/(N)\right]} = \frac{\text{Sin } 30^{o}}{(43)\ \text{Sin}\left[30/(43)\right]}$$

For 120° phase belt angle and (q) = integer

When (43a) = 120 and (25) = integer

$$K_d = \frac{\text{Sin } 60^{o}}{2(q)\ \text{Sin}\left[30/(q)\right]} = \frac{\text{Sin } 60^{o}}{2(25)\ \text{Sin}\left[30/(25)\right]}$$

For 120° phase belt angle and q $\neq$ integer

When (43a) = 120 and (25) $\neq$ integer = N/B reduced to lowest terms

$$K_d = \frac{\text{Sin } 60^{o}}{2(N)\ \text{Sin}\left[30/(N)\right]} = \frac{\text{Sin } 60^{o}}{2(43)\ \text{Sin}\left[30/(43)\right]}$$

(44) K_P

PITCH FACTOR - The ratio of the voltage induced in the coil to the voltage that would be induced in a full pitched coil. See Table 1 for compilation of the pitch factors for the various harmonics.

$$K_P = \sin\left[\frac{(Y)}{(m)(q)} \times 90^o\right] = \sin\left[\frac{(31)}{(5)(25)} \times 90^o\right]$$

(45) n_e

TOTAL EFFECTIVE CONDUCTORS - The actual number of effective series conductors in the stator winding taking into account the pitch and skew factors but not allowing for the distribution factor.

$$n_e = \frac{(Q)(n_s)(K_P)(K_{SK})}{(C)} = \frac{(23)(30)(44)(42)}{(32)}$$

(46) a_c

CONDUCTOR AREA OF STATOR WINDING in $(\text{inches})^2$ - The actual area of the conductor taking into account the corner radius on square and rectangular wire. See the following table for typical values of corner radii

If (39) = 0 then $a_c = .25\pi(\text{Dia})^2 = .25\pi(33)^2$

If (39) $\neq$ 0 then $a_c = (N'_{ST})\left[(\text{strand width})\ (\text{strand depth}) - (.858\ r_c^2)\right] = (34a)\left[(33)\ (39) - (.858\ r_c^2)\right]$

where $.858\ r_c^2$ is obtained from Table V below.

(39)	(33) .188	.189 (33) .75	(33) .751
.050	.000124	.000124	.000124
.072	.000210	.000124	.000124
.125	.000210	.00084	.000124
.165	.000840	.00084	.003350
.225	.001890	.00189	.003350
.438	--	.00335	.007540
.688	--	.00754	.01340
--	--	.03020	.03020

TABLE V

(47) S_S CURRENT DENSITY - Amperes per square inch of stator conductor

$$S_S = \frac{(I_{PH})}{(C)(a_c)} = \frac{(8)}{(32)(46)}$$

(48) L_E END EXTENSION LENGTH in inches - Can be an input or output.

For L_E to be output, insert 0. on input sheet.

For L_E to be input, calculate per following:

When (29) = 0. then:

$$L_E = .5 + \frac{K_T \pi (Y)\left[(d)+(h_s)\right]}{Q} = .5 + \frac{\begin{Bmatrix} 1.3 \text{ If } (6) = 2 \\ 1.5 \text{ If } (6) = 4 \\ 1.7 \text{ If } (6) \quad 4 \end{Bmatrix} \pi (31)\left[(11)+(22)\right]}{(23)}$$

When (29) = 1. then:

$$L_E = 2(\ell_{e2}) + \pi\left[\frac{h_1}{2} + (d_b)\right] + (\mathcal{Y})\left[\frac{\tau_s^2}{\sqrt{\tau_s^2 - b_s^2}}\right]$$

$$= 2 \quad (36) + \pi\left[\frac{(22)}{2} + (35)\right] + (31)\left[\frac{(26)^2}{\sqrt{(26)^2 - (22)^2}}\right]$$

(49) ℓ_t 1/2 MEAN TURN - The average length of one conductor in inches.

$$\ell_t = (\ell) + (L_E) = (13) + (44)$$

(50) $X_s\,^{o}C$ STATOR TEMP ^{o}C - Input temp at which F.L. losses will be calculated. No load losses and cold resistance will be calculated at $20^{o}C$.

(51) ρ_s

RESISTIVITY OF STATOR WINDING - In micro ohm-inches @ $20^{o}C$. If tables are available using units other than that given above, use Table VI for conversion to ohm-inches.

ρ	ohm-cm	ohm-in	ohm-cir mil/ft
1 ohm-cm =	1.000	0.3937	6.015×10^{6}
1 ohm-in =	2.540	1.000	1.528×10^{7}
1 ohm-cir mil/ft =	1.662×10^{-7}	6.545×10^{-8}	1.000

TABLE VI
Conversion Factors for Electrical Resistivity

(52) $\rho_{S(hot)}$

RESISTIVITY OF STATOR WINDING - Hot at $X_s{}^{o}C$ in micro ohm-inches

$$\rho_{S(hot)} = (\rho_S)\left[\frac{(X_s{}^{o}C) + 234.5}{254.5}\right] = (51)\left[\frac{(50) + 234.5}{254.5}\right]$$

(53) $R_{SPH(cold)}$

STATOR RESISTANCE/PHASE - Cold @ $20^{o}C$ in ohms

$$R_{SPH(cold)} = \frac{(\rho_s)(n_s)(Q)(\ell_t)}{(m)(a_c)(C)^2} \times 10^{-6} = \frac{(51)(30)(23)(49)}{(5)(46)(32)^2} \times 10^{-6}$$

(54) $R_{SPH(hot)}$

STATOR RESISTANCE/PHASE - Calculated @ $X^{o}C$ in ohms

$$R_{SPH(hot)} = \frac{(\rho_{s\ hot})(n_s)(Q)(\ell_t)}{(m)(a_c)(C)^2} \times 10^{-6} = \frac{(52)(30)(23)(49)}{(5)(46)(32)^2} \times 10^{-6}$$

(55) $EF_{(top)}$

EDDY FACTOR TOP - The eddy factor of the top coil. Calculate this value at the expected operating temperature of the machine. For round wire $EF_{top} = 1$

$$EF_{top} = 1 + \left\{ .584 + \left[\frac{N_{st}^2 - 1}{16}\right]\left[\frac{h'_{st}\,\ell}{h_{st}\,\ell_t}\right]^2 \right\} 3.35 \times 10^{-3} \left[\frac{(h_{st})(n_s)(f)(a_c)}{(b_s)(\rho_{S\,hot})}\right]^2$$

$$= 1 + \left\{ .584 + \left[\frac{(34)^2 - 1}{16}\right]\left[\frac{(38)(13)}{(37)(49)}\right]^2 \right\} 3.35 \times 10^{-3} \left[\frac{(37)(30)(5a)(46)}{(22)(52)}\right]^2$$

(56) EF (bot)

EDDY FACTOR BOTTOM - The eddy factor of the bottom coil at the expected operating temperature of the machine. For round wire $EF_{(bot)} = 1$

$$EF_{(bot)} = (EF_{(top)}) - 1.677 \left[\frac{(h_{st})(n_s)(f)(a_c)}{(b_s)(\rho_{S\,hot})}\right]^2 \times 10^{-3}$$

$$= (55) - 1.677 \left[\frac{(37)(30)(5a)(46)}{(22)(52)}\right] 10^{-3}$$

(57) b_{tm}

STATOR TOOTH WIDTH 1/2 way down tooth in inches - For slots type (a), (b), (d) and (e), Figure I

$$b_{tm} = \frac{\pi\left[(d) + (h_s)\right]}{(Q)} - (b_s) = \frac{\pi\left[(11) + (22)\right]}{(23)} - (22)$$

For slot type (c), Figure I

$$b_{tm} = \frac{\pi\left[(d) + 2(h_s)\right]}{(Q)} - (b_3) = \frac{\pi\left[(11) + 2(22)\right]}{(23)} - (22)$$

(57a) $b_{t1/3}$ STATOR TOOTH WIDTH 1/3 distance up from narrowest section

For slots type (a), (b) and (e)

$$b_{t\ 1/3} = (\tau_{s\ 1/3}) - (b_s) = (27) - (22)$$

For slot type (c)

$$b_{t\ 1/3} = b_{tm} = (57)$$

For slot type (d)

$$b_{t\ 1/3} = (\tau_{1/3}) - \frac{2\sqrt{2}}{3}(b_s) = (27) - .94\,(22)$$

(58) b_t TOOTH WIDTH AT STATOR I.D. in inches -

For partially closed slot

$$b_t = \frac{\pi(d)}{(Q)} - b_0 = \frac{\pi(11)}{(23)} - (22)$$

For open slot

$$b_t = \frac{\pi(d)}{(Q)} - b_s = \frac{\pi(11)}{(23)} - (22)$$

(59) g MAIN AIR GAP in inches.

(59a) g_2 AUXILIARY AIR GAP in inches. Refer to Figure 3

(59b) TYPE OF GAP g_3. Refer to Figure 4

For stepped gap use 1. on input sheet.

For tapered gap use 2. on input sheet.

(59c)	g_3	AIR GAP (g_3) in inches - Refer to Figure 4 When (59b) = 2. then $g_3 = g_{3e}$ (59c) = (59f) When (59b) = 1. go on to (59d)
(59d)	g_{3-1}	AIR GAP g_{3-1} in inches. Refer to Figure 4
(59e)	g_{3-2}	AIR GAP g_{3-2} in inches. Refer to Figure 4
(59f)	g_{3e}	EFFECTIVE AIR GAP LENGTH TO BE SPECIFIED ON INPUT SHEET When (59b) = 2. then $g_{3e} = g_3$ or (59f) = (59c) When (59d) = (59e), then g_{3E} = (59d) When (59d) $\neq$ (59e), then $g_{3E} = \frac{(59d) + (59e)}{2}$
(60)	C_X	REDUCTION FACTOR - Used in calculating conductor permeance and is dependent on the pitch and distribution factor. This factor can be obtained from Graph 1 with an assumed K_d of .955 or calculated as shown. $C_X = \frac{(K_X)}{(K_P)^2\ (K_d)^2} = \frac{(61)}{(44)^2\ (43)^2}$ ~~NOTE: See special case for (e) slot referred to calculation (62).~~
(61)	K_X	Factor to account for difference in phase current in coil sides in same slot.

For 60° phase belt winding, ie when (42a) = 60

$$K_X = 1/4\left[\frac{3(y)}{(m)(q)} + 1\right] \text{ where } 2/3 \leqq (y)/(m)(q) \leqq 1.0$$

$$K_X = 1/4\left[\frac{3(31)}{(5)(25)} + 1\right] \text{ where } 2/3 \leqq (31a) \leqq 1.0$$

or

$$K_X = 1/4\left[\frac{6(y)}{(m)(q)} - 1\right] \text{ where } 1/2 \leqq (31a) \leqq 2/3$$

$$K_X = 1/4\left[\frac{6(31)}{(5)(25)} - 1\right] \text{ where } 1/2 \leqq (31a) \leqq 2/3$$

For 120° phase belt winding, ie when (42a) = 120

$$K_X = .75 \text{ when } 2/3 \leqq (y)/(m)(q)$$

$$K_X = .75 \text{ when } 2/3 \leqq (31a)$$

or

$$K_X = .05\left[\frac{24(y)}{(m)(q)} - 1\right] \text{ where } 1/2 \leqq \frac{(y)}{(m)(q)} \leqq 2/3$$

$$K_X = .05\left[\frac{24(31)}{(3)(25)} - 1\right] \text{ where } 1/2 \leqq (31a) \leqq 2/3$$

(62) λ_i

<u>CONDUCTOR PERMEANCE</u> - The specific permeance for the portion of the stator current that is embedded in the iron. This permeance depends upon the configuration of the slot.

(a) For open slots

$$\lambda_i = (C_X)\frac{20}{(m)(q)}\left[\frac{(h_2)}{(b_s)} + \frac{(h_1)}{3(b_s)} + \frac{(b_t)^2}{16(\tau_s)(g)} + \frac{.35(b_t)}{(\tau_s)}\right]$$

$$\lambda_i = (60)\,\frac{20}{(5)(25)}\left[\frac{(22)}{(22)} + \frac{(22)}{3(22)} + \frac{(58)^2}{16(26)(59)} + \frac{.35(58)}{(26)}\right]$$

(b) For partially closed slots with constant slot width

$$\lambda_i = (C_X)\,\frac{20}{(m)(q)}\left[\frac{(h_o)}{(b_o)} + \frac{2(h_t)}{(b_o) + (b_s)} + \frac{(h_w)}{(b_s)} + \frac{(h_1)}{3(b_s)} + \frac{(b_t)^2}{16(\tau_s)(g)} + \frac{.35(b_t)}{(\tau_s)}\right]$$

$$\lambda_i = (60)\,\frac{20}{(5)(25)}\left[\frac{(22)}{(22)} + \frac{2(22)}{(22) + (22)} + \frac{(22)}{(22)} + \frac{(22)}{3(22)} + \frac{(58)^2}{16(26)(59)} + \frac{.35(58)}{(26)}\right]$$

(c) For partially closed slots (tapered sides)

$$\lambda_i = (C_X)\,\frac{20}{(m)(q)}\left[\frac{(h_o)}{(b_o)} + \frac{2(h_t)}{(b_o) + (b_1)} + \frac{2(h_w)}{(b_1)+(b_2)} + \frac{(h_1)}{3(b_2)} + \frac{(b_t)^2}{16(\tau_s)(g)} + \frac{.35(b_t)}{(\tau_s)}\right]$$

$$\lambda_i = (60)\,\frac{20}{(5)(25)}\left[\frac{(22)}{(22)} + \frac{2(22)}{(22) + (22)} + \frac{2(22)}{(22)+(22)} + \frac{(22)}{3(22)} + \frac{(58)^2}{16(26)(59)} + \frac{.35(58)}{(26)}\right]$$

(d) For round slots

$$\lambda_i = (C_X)\,\frac{20}{(m)(q)}\left[.62 + \frac{(h_o)}{(b_o)}\right]$$

$$\lambda_i = (60)\,\frac{20}{(5)(25)}\left[.62 + \frac{(22)}{(22)}\right]$$

(e) For open slots with a winding of one conductor per slot

$$\lambda_i = (C_X)\,\frac{20}{(m)(q)}\left[\frac{(h_2)}{(b_s)} + \frac{(h_1)}{3(b_s)} + .6 + \frac{(g)}{2(\tau_s)} + \frac{(\tau_s)}{4(g)}\right]$$

$$\lambda_i = (60)\,\frac{20}{(5)(25)}\left[\frac{(22)}{(22)} + \frac{(22)}{3(22)} + .6 + \frac{(59)}{2(26)} + \frac{(26)}{4(59)}\right]$$

(63) K_E

LEAKAGE REACTIVE FACTOR for end turn

$$K_E = \frac{\text{Calculated value } (L_E)}{\text{Value } (L_E) \text{ from Graph 1}} \quad \text{(For machines where (11)} > 8'')$$

where L_E = (48) and abscisa of Graph 1 = $(\gamma)(\tau_s)$ = (31)(26)

$$K_E = \sqrt{\frac{\text{Calculated value of } (L_E)}{\text{Value } (L_E) \text{ from Graph 1}}} \quad \text{(For machines where (11)} < 8'')$$

(64) E

END WINDING PERMEANCE - The specific permeance for the end extension portion of the stator winding

$$\lambda_E = \frac{6.28(K_E)}{(\ell)(K_d)^2}\left[\frac{\phi_E L_E}{2n}\right] = \frac{6.28(63)}{(13)(43)^2}\left[\frac{Q_E L_E}{2n}\right]$$

The term $\left[\frac{\phi_E L_E}{2n}\right]$ is obtained from Graph 1.

The symbols used in this (term) do not apply to those of this design manual. Reference information for the symbol origin is included on Graph 1.

(65) --

WEIGHT OF COPPER - The weight of stator copper in lbs.

#'s copper = $.321(n_s)(Q)(a_c)(\ell_t)$ = .321(30)(23)(46)(49)

NOTE: This answer is given in lbs. based on the density of copper. If any other material is used, the answer on output sheet can be converted by the designer by multiplying by the ratio of densities.

(66) -- **WEIGHT OF STATOR IRON** - in lbs.

$$\#\text{'s iron} = .283\left\{(b_{tm})(Q)(\ell_s)(h_s) + \pi\left[(D) - (h_c)\right](h_c)(\ell_s)\right\}$$

$$.283\left\{(57)(23)(17)(22) + \pi\left[(12) - (24)\right](24)(17)\right\}$$

(67) K_s **CARTER COEFFICIENT**

$$K_s = \frac{(\tau_s)\left[5(g) + (b_s)\right]}{(\tau_s)\left[5(g) + (b_s)\right] - (b_s)^2} \quad \text{(For open slots)}$$

$$K_s = \frac{(26)\left[5(59) + (22)\right]}{(26)\left[5(59) + (22)\right] - (22)^2}$$

$$K_s = \frac{\tau_s\left[4.44(g) + .75(b_o)\right]}{\tau_s\left[4.44(g) + .75(b_o)\right] - (b_o)^2} \quad \text{(For partially closed slots)}$$

$$K_s = \frac{(26)\left[4.44(59) + .75(22)\right]}{(26)\left[4.44(59) + .75(22)\right] - (22)^2}$$

(68) A_g **MAIN AIR GAP AREA** - The area of the gap surface at the stator bore.

Gap Area $= \pi(d)(\ell) = \pi(11)(13)$

(69) g_e **EFFECTIVE AIR GAP**

$$g_e = (K_s)(g) = (67)(59)$$

(70) A_{g2}

AUXILIARY AIR GAP (g_2) AREA

$$= \pi\left[(d_{ir}) + (g_2)\right](\ell_{g2})$$

$$= \pi\left[(78) + (59a)\right] (78)$$

(70a) A_{g3}

AUXILIARY AIR GAP (g_3) AREA

When (59b) = 1.0 calculate as follows:

$$A_{g3} = \pi\left\{(d_{s1})(\ell_{s1})+(d_{s2})(\ell_{s2})+(d_{s3})(\ell_{s3})+(d_{s4})(\ell_{s4})+(d_{s5})(\ell_{s5})\right\}+ \pi\left\{\frac{(d_{os})^2 - (d_{s1})^2}{4}\right\}$$

= All dimensions located at item (78)

NOTE: Number of steps limited to 5 in this program.

When (59b) = 2.0 calculate as follows:

$$A_{g3} = \frac{\pi}{2}\left[(d_{to}) + (d_{t1})\right]\sqrt{4(\ell_{y4})^2 + \left[(d_{to}) - (d_{t1})\right]^2}$$

$$A_{g3} = \frac{\pi}{2}\left[(78) + (78)\right]\sqrt{4(78)^2 + \left[(78) - (78)\right]^2}$$

(71) C_1

THE RATIO OF MAXIMUM FUNDAMENTAL of the field form to the actual maximum of the field form - This term can be an input or output. For C_1 to be output insert 0. on input sheet. For C_1 to be input, determine C_1 as follows:

For pole heads with only one radius, C_1 is obtained from Curve #4. The abscisa is "pole embrace" (α) = (77). The graphical flux plotting method of determining C_1 is explained in the section titled "Derivations" in the Appendix.

(72) C_W WINDING CONSTANT - The ratio of the RMS line voltage for a full pitched winding to that which would be introduced in all the conductors in series if the density were uniform and equal to the maximum value. This value can be an input or output. For C_W to be an output, insert 0. on input sheet. For C_W to be an input, calculate as follows:

$$C_W = \frac{(E)(C_1)(K_d)}{\sqrt{2}\,(E_{PH})(m)} = \frac{(3)(71)(43)}{\sqrt{2}\,(4)(5)}$$

Assuming $K_d = .955$, then $C_W = .225\ C_1$ for three phase delta machines and $C_W = .390\ C_1$ for three phase star machines.

(73) C_P POLE CONSTANT - The ratio of the average to the maximum value of the field form. This ratio can be an input or output. For C_P to be an output, insert 0. on input sheet. For C_P to be an input, determine as follows:

For pole heads with more than one radius C_P is calculated from the same field form that was used to determine C_1, and this method is described in the section titled "Derivations" in the Appendix. For pole heads with only one radius C_P is obtained from curve #4. Note the correction factor at the top of the curve.

(74) C_M DEMAGNETIZING FACTOR - direct axis - This factor can be an input or output. For C_M to be an output, insert 0. on input sheet. For C_M to be an input, determine as follows:

$$C_M = \frac{(\alpha)\pi + \sin[(\alpha)\pi]}{4 \sin[(\alpha)\ \pi/2]} = \frac{(77)\pi + \sin[(77)\pi]}{4 \sin[(77)\ \pi/2]}$$

C_M can also be obtained from curve 9.

(75) C_q <u>CROSS MAGNETIZING FACTOR</u> - quadrature axis - This factor can be an input or output. For C_q to be an output, insert 0. on input sheet. For C_q to be an input, determine as follows:

$$C_q = \frac{1/2 \cos[(\alpha)\ \pi/2] + (\alpha)\pi - \sin[(\alpha)\pi]}{4 \sin[(\alpha)\ \pi/2]}$$

$$= \frac{1/2 \cos[(77)\ \pi/2] + (77)\pi - \sin[(77)\pi]}{4 \sin[(77)\ \pi/2]}$$

VALID FOR CONCENTRIC POLES.

C_q can also be obtained from curve 9.

(75a) -- <u>TYPE OF POLE</u> - This computer program is presently set up to handle two types of pole shapes:

1) A rectangular or square type of pole.

2) A hexagonal type.

Refer to Figure 2

Type 1 (Rectangular or Square Pole)

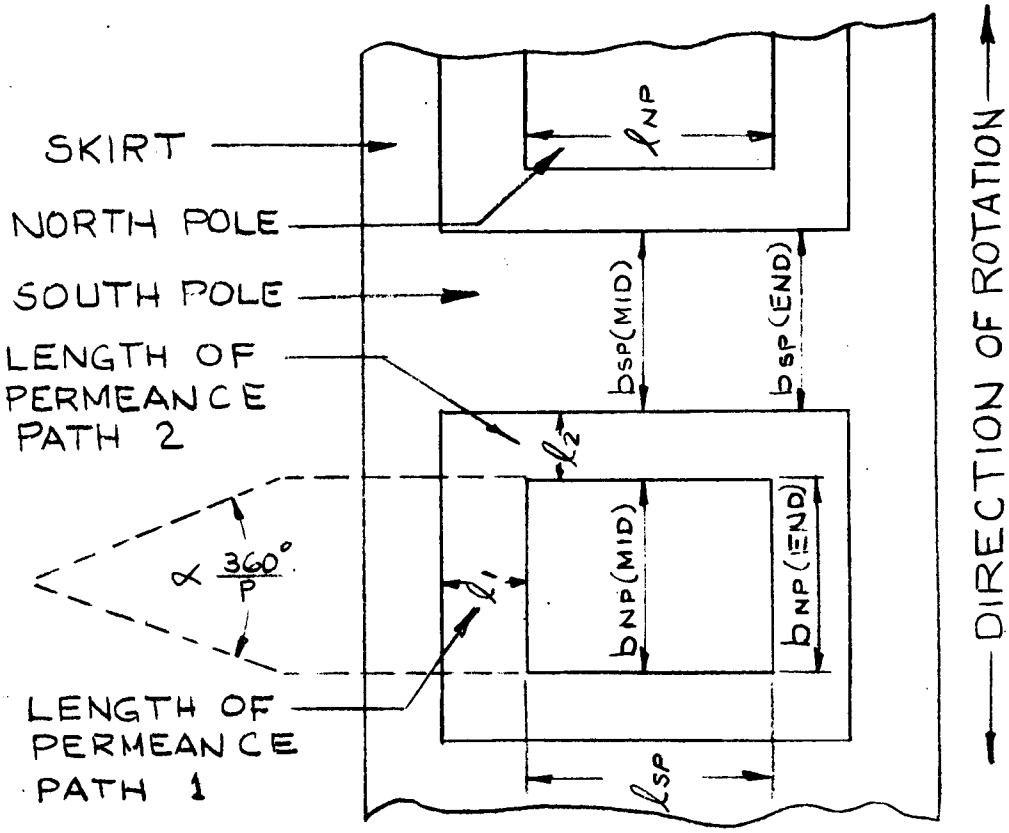

Type 2 (Hexagonal Pole)

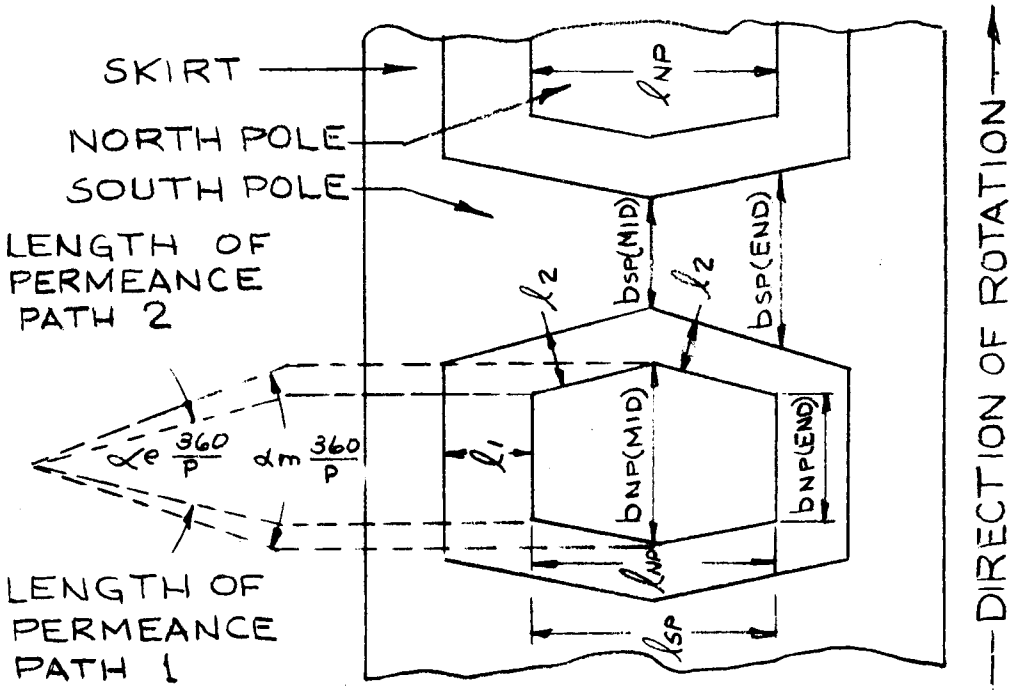

The above sections represent a view into the north and south pole from main air gap. This program is presently set up to handle only two types of pole shapes: 1) Rectangular or square, 2) Hexagonal.

Figure 2

(76) -- <u>POLE DIMENSION LOCATIONS</u> per Figure 2

All dimensions given in inches.

b_{sp}(end) - Width of south pole at end of stator stack.

b_{sp}(mid) - Width of south pole at middle of south pole.

b_{np}(end) - Width of north pole at end of north pole.

b_{np}(mid) - Width of north pole at middle of north pole.

ℓ_{sp} - Length of south pole.

ℓ_{np} - Length of north pole.

(77) α <u>POLE EMBRACE</u> - This value must be recorded on the input sheet.

When $b_{np}(end) = b_{np}(mid)$

$$\alpha = \frac{[b_{np}(end)]}{(\tau_p)} = \frac{(76)}{(41)}$$

When $b_{np}(end) \neq b_{np}(mid)$

$$\alpha = \frac{(\alpha_e) + (\alpha_m)}{2} = \frac{(77) + (77)}{2}$$

Where $\alpha_e = \frac{[b_{np}(end)]}{(\tau_p)} = \frac{(76)}{(41)}$

$$\alpha_m = \frac{[b_{np}(mid)]}{(\tau_p)} = \frac{(76)}{(41)}$$

(77a) The next eleven (11) items deal with the calculation of rotor and stator leakage permeance. A number of illustrations are included to help identify and locate the

actual path. This computer program is set up to handle the permeance calculations two ways:

1) P_1 through P_7 can be calculated by computer. For this program insert 0. on input sheet.
2) P_1 through P_7 can be calculated by designer. For this case insert actual calculated value on input sheet.

Permeance calculations P_1 through P_7 are all based on the equation

$$P = \frac{\mu\,(\text{area})}{\ell}$$

Where μ = 3.19

Area ℓ = cross sectional area perpendicular to

= length of path

(78) ROTOR DIMENSION LOCATIONS per Figure BELOW

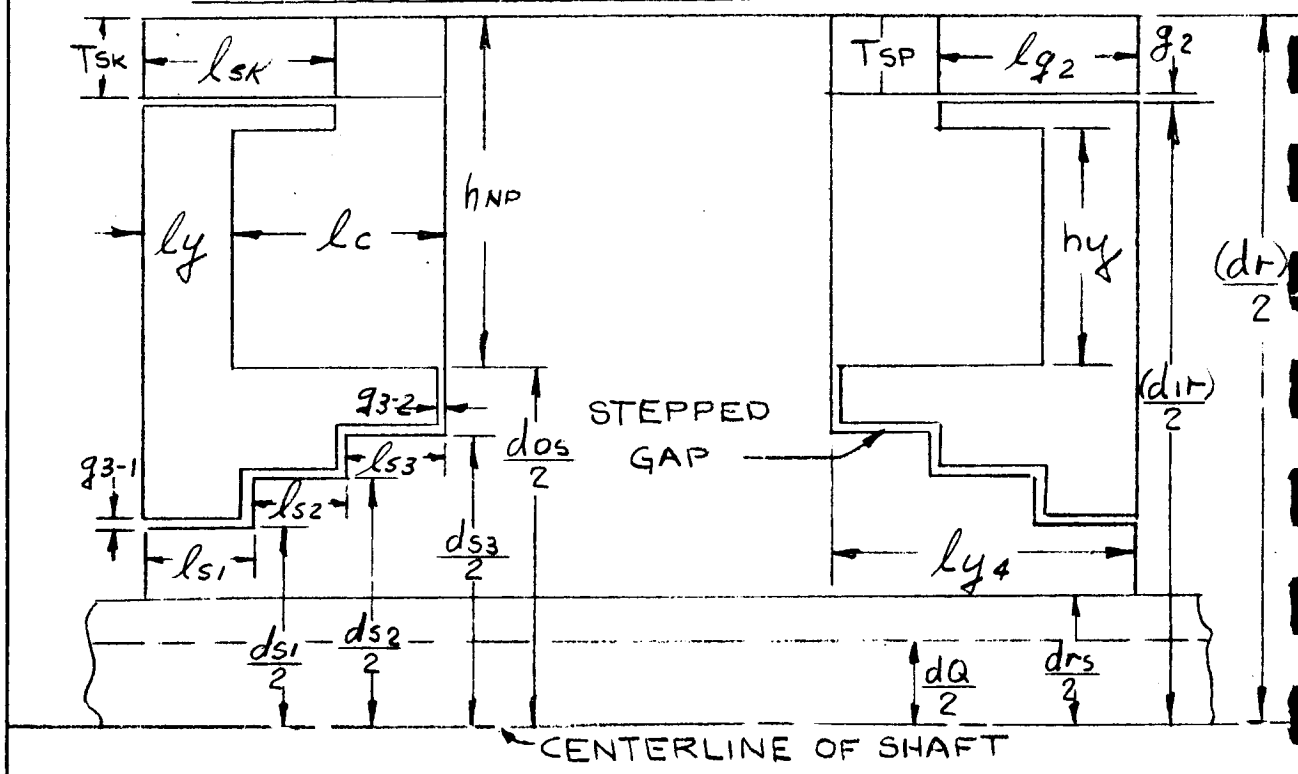

Figure 3

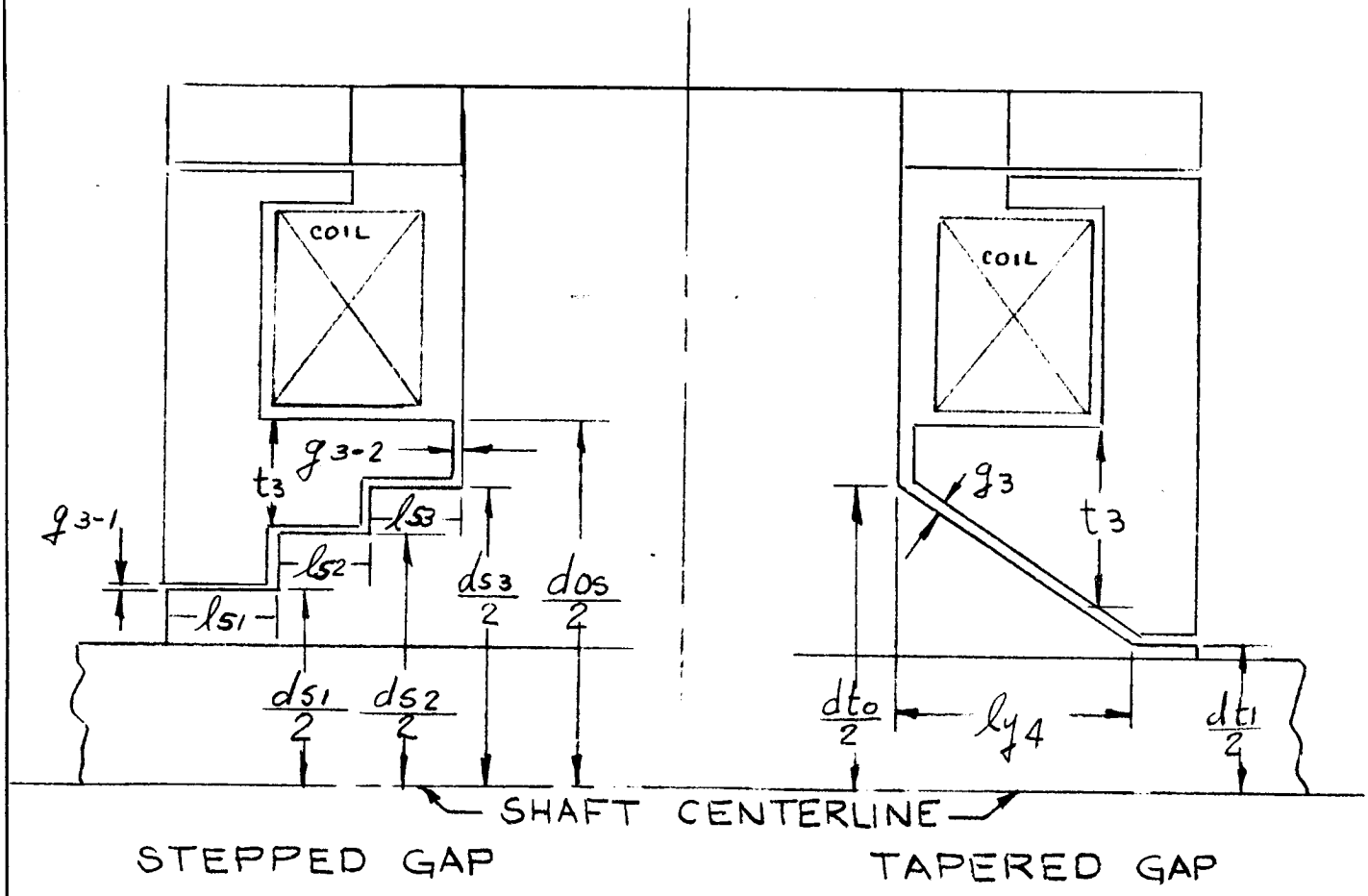

Figure 4

(78)

d_{s1}, d_{s2}, d_{s3}, d_{s4}, d_{s5}, d_{os} — Diameters of steps in stepped gap g_3. Computer program is set up to handle a maximum of 5 steps. Where the dimensions do not apply, insert 0.0 on input sheet.

ℓ_{s1}, ℓ_{s2}, ℓ_{s3}, ℓ_{s4}, ℓ_{s5} — Horizontal length of stepped gap g_3. Computer program is set up to handle a maximum of 5 steps.

(78) (CONT'D)

d_{ir} = inside diameter of tube.

d_Q = inside diameter of hollow shaft.

d_{to} For tapered gap only. Insert 0.0 on input sheet

d_{tl} when stepped gap is used.

h_{np} = Height of north pole.

h_y = Height of yoke.

ℓ_y = Length of yoke.

ℓ_{y4} = Effective length of shaft - the portion carrying flux.

ℓ_{g2} = Horizontal length of g_2.

T_{sp} = Thickness of south pole.

T_{sk} = Thickness of rotor skirt.

All dimensions given in inches.

All dimensions listed above that apply should be filled out on input sheet. Where the dimensions do not apply, insert 0.0 on input sheet.

(79) a_{np} NORTH POLE AREA - The effective cross-sectional area of the north pole.

When $b_{np}(end) = b_{np}(mid)$

$$a_{np} = (\ell_{np})\left[(b_{np}(end)\right]$$

$$= (76)\ (76)$$

When $b_{np}(end) \neq b_{np}(mid)$

$$a_{np} = \frac{(\ell_{np})}{2}\left[(b_{np}(end) + (b_{np}(mid)\right]$$

$$= \frac{(76)}{2}\left[(76) + (76)\right]$$

When radially tapered poles are used, use the dimensions at the base of the pole to calculate the area.

(79a) a_{sp} SOUTH POLE AREA - The effective cross-sectional area of south pole. Cross-sectional to the path of flux at the point in line with edge of stator stack.

$$a_{sp} = (b_{sp}(end))(T_{sp})$$
$$= (76)\ (78)$$

(79b) a_{sk} AREA OF SKIRT - At entry edge of auxiliary air gap g_2 in inches^2.

$$a_{sk} = \pi\left[(d_r) - (T_{sk})\right](T_{sk})$$
$$= \pi\left[(11a) - (78)\right](78)$$

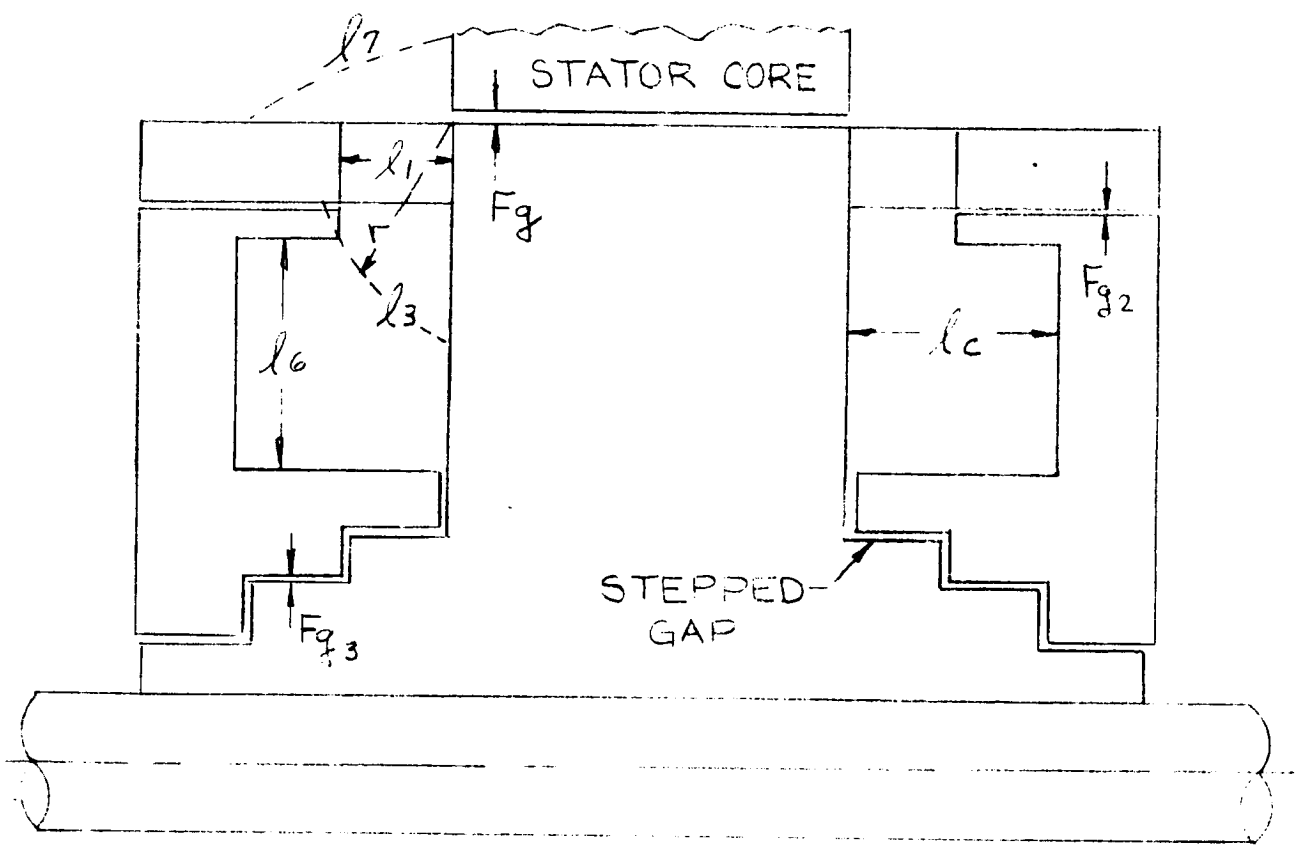

Figure 5

(80) P_1 POLE HEAD END LEAKAGE PERMEANCE - This input can be either 0.0 or the actual value if available. Refer to Item (77a) for explanation. See Figure 2 for location.

$$P_1 = 3.19 \frac{\left[(b_{np}(end)) + (\ell_2)\right]\left[(T_{sp})\ (p)\right]}{\ell_1}$$

$$= 3.19 \frac{\left[(76) + (80)\right]\left[(78)\ (6)\right]}{(80)}$$

(80a) ℓ_1 Where ℓ_1 = length of leakage path P_1 and must be specified on input sheet. Refer to Figure 2 for location.

(81) P_2 POLE HEAD SIDE LEAKAGE PERMEANCE - Refer to Figure 2

This input can be either 0.0 or the actual value if available. Refer to Item (77a) for explanation.

When $b_{np}(end) = b_{np}(mid)$

$$P_2 = 3.19 \frac{\left[(\ell_{np}) + (\ell_1)\right]\ (T_{sp})(P)}{(\ell_2)}$$

$$P_2 = 3.19 \frac{\left[(76) + (80)\right](78)\ (6)}{(81a)}$$

When $b_{np}(end) \neq b_{np}(mid)$

$$P_2 = 6.28 \frac{\left[\frac{1}{2}\sqrt{\left[(b_{np}(mid))-(b_{np}(end)\right]^2 + (\ell_{np})^2} + \frac{\ell_1}{2}\right](T_{sp})(P)}{\ell_2}$$

$$6.28 \frac{\left[\frac{1}{2}\sqrt{\left[(76) - (76)\right]^2 + (76)^2} + \frac{(80)}{2}\right](78)(6)}{(81a)}$$

(81a) ℓ_2 LENGTH OF LEAKAGE PATH P_2 and must be specified on input sheet. Refer to Figure 2 for location.

(82) P_3 POLE BODY END LEAKAGE PERMEANCE - Refer to Figure 5

This input can be either 0.0 or the actual value if available. Refer to Item (77a) for explanation.

$$P_3 = 3.19 \frac{\left[(b_{np}(end)\right] \left[(h_{np}) - (T_{sp})\right] (P)}{\ell_3}$$

$$= 3.19 \frac{\left[(76)\right]\left[(78) - (78)\right] (6)}{(82)}$$

(82a) ℓ_3 LENGTH OF PERMEANCE PATH P_3

$$= \left[(d_r) - (d_{os})\right] \frac{\pi}{8} - (T_{sp})$$

$$= \left[(11a) - (78)\right] \frac{\pi}{8} - (78)$$

(83) P_4 POLE BODY SIDE LEAKAGE PERMEANCE - This input can be either 0.0 or the actual value if available. Refer to Item (77a) for explanation. This calculation varies with the number of poles. The four-pole calculation differs from the six-pole calculation but the 6, 8, 10 and 12 pole calculations are the same. Refer to Figures 7, 8 & 9

When (6) = 4 and $b_{np}(end) = b_{np}(mid)$

$$P_4 = 3.19 \frac{\left[\frac{(d_r)}{2} - (T_{sp})\right]\left[(\ell_{np}) = (\ell_1)\right](P)}{(\ell_4)}$$

$$= 3.19 \frac{\left[\frac{(11a)}{2} - (78)\right]\left[(76) + (80)\right](6)}{(83)}$$

Where $\ell_4 = \frac{(d_r) - (d_{os})}{2} - (T_{sp})$

$$= \frac{(11a) - (78)}{2} - (78)$$

When (6) = 4 and $b_{np}(end) \neq b_{np}(mid)$

$$P_4 = 3.19 \frac{\left[\frac{(d_r)}{2} - (T_{sp})\right]\left[\frac{1}{4}\sqrt{\left[(b_{np}(mid)-(b_{np}(end)\right]^2+(\ell_{np})^2+\frac{(\ell_1)}{2}}\right]2(P)}{(\ell_4)}$$

$$= 3.19 \frac{\left[\frac{(11a)}{2} - (78)\right]\left[\frac{1}{4}\sqrt{\left[(76) - (76)\right]^2 + (76)^2 + \frac{(80)}{2}}\right]2(6)}{(83)}$$

When (6) $\geqq$ 6 and $b_{np}(end) = b_{np}(mid)$

$$P_4 = 3.19 \frac{\left[\frac{(d_r) - d_{os})}{2} - (T_{sp})\right]\left[(\ell_{np}) + (\ell_1)\right](P)}{(\ell_{4a})}$$

$$= 3.19 \frac{\left[\frac{(11a) - (78)}{2} - (78)\right]\left[(76) + (80)\right] (6)}{(83)}$$

Where $\ell_{4a} = \left[\frac{(d_r)}{2} - (T_{sp})\right] \sin \frac{2\pi}{(P)}\left[1 - \frac{(\alpha)}{4}\right] - \frac{(b_{np}(end)}{2}$

$$= \left[\frac{(11a)}{2} - (78)\right] \sin \frac{2\pi}{(6)}\left[1 - \frac{(77)}{4}\right] - \frac{(76)}{2}$$

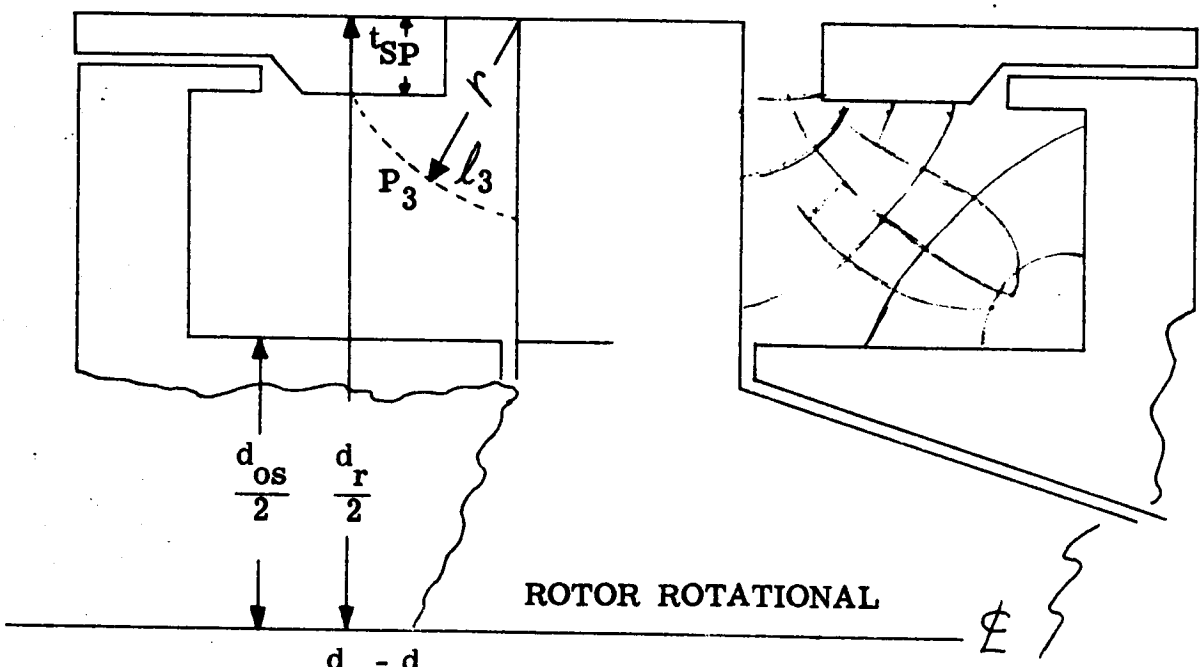

$$r \text{ above} = \frac{d_r - d_{os}}{4}$$

$$\ell_3 = \left(\frac{d_r - d_{os}}{4}\ \frac{\pi}{2}\right) - t_{SP} = (d_r - d_{os})\frac{\pi}{8} - t_{SP}$$

$$P_3 = \frac{3.19\, b_{NP}\,(h_{NP} - t_{SP})\,P}{\ell_3}$$

Figure 6

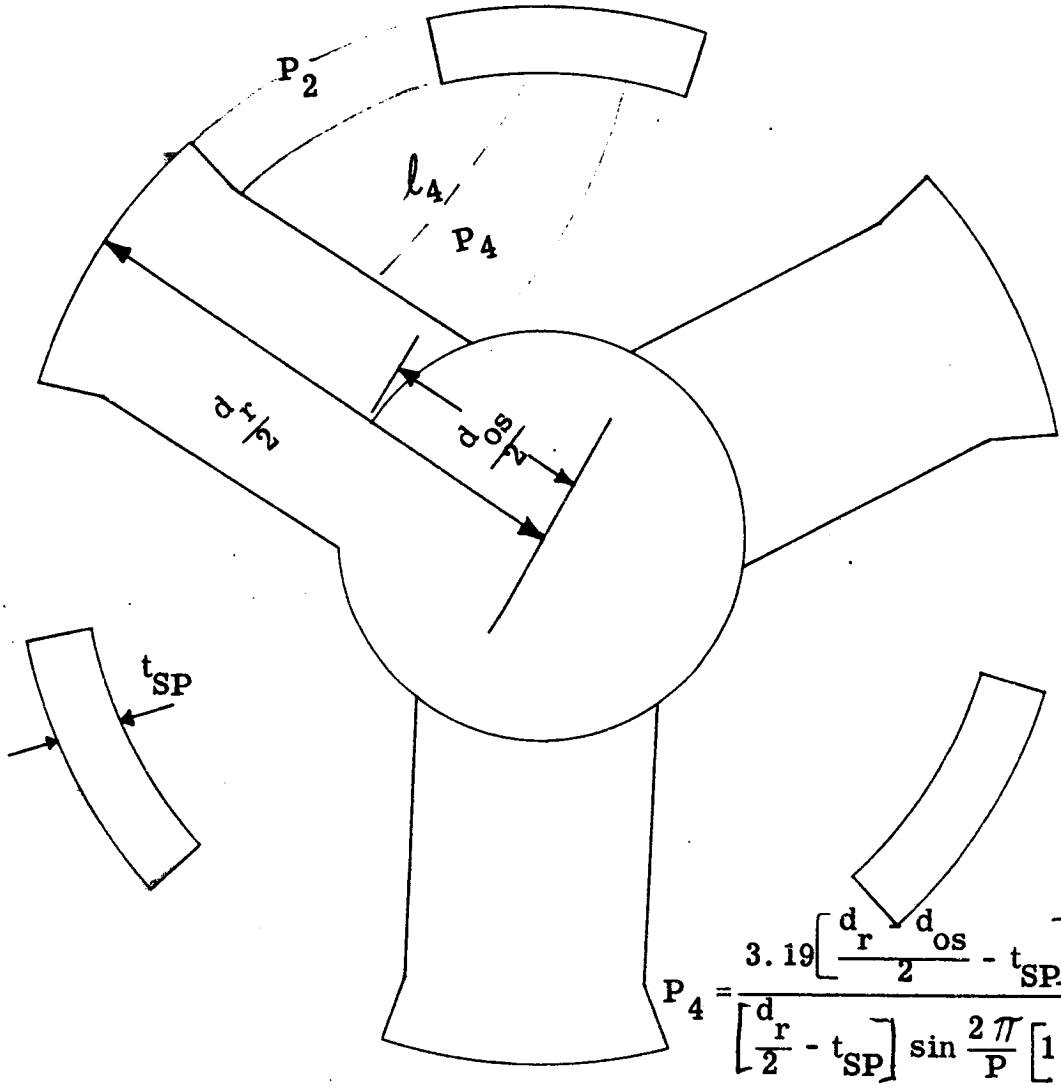

$$P_4 = \frac{3.19\left[\frac{d_r - d_{os}}{2} - t_{SP}\right](\ell_{NP} + \ell_1)\,P}{\left[\frac{d_r}{2} - t_{SP}\right]\sin\frac{2\pi}{P}\left[1 - \frac{\alpha}{4}\right] - \frac{b_{NP}}{2}}$$

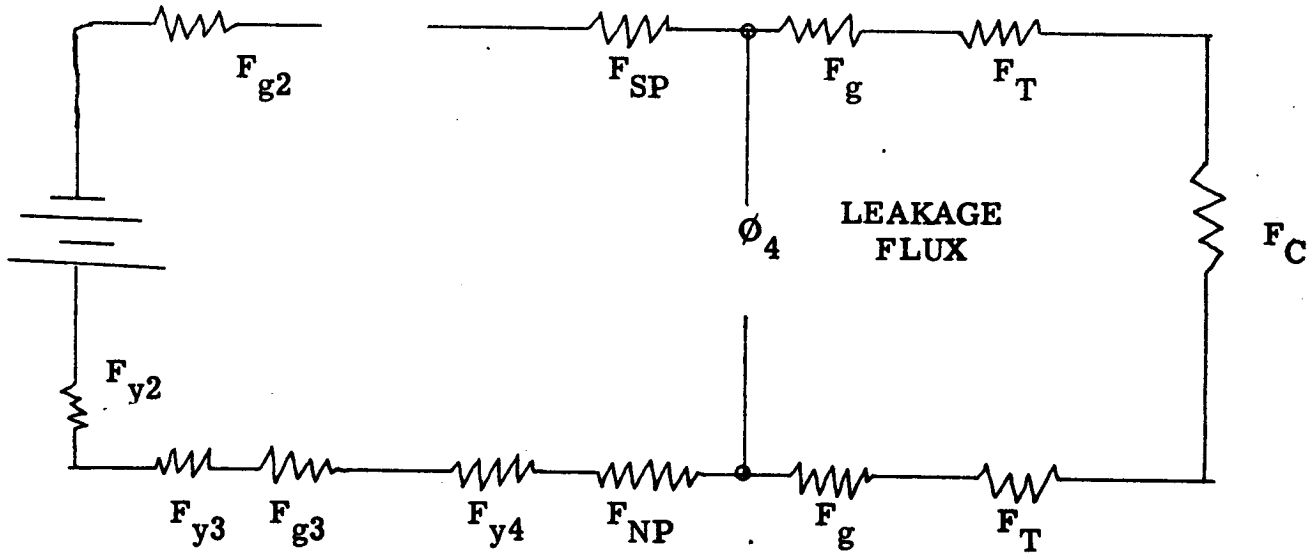

FIGURE 7

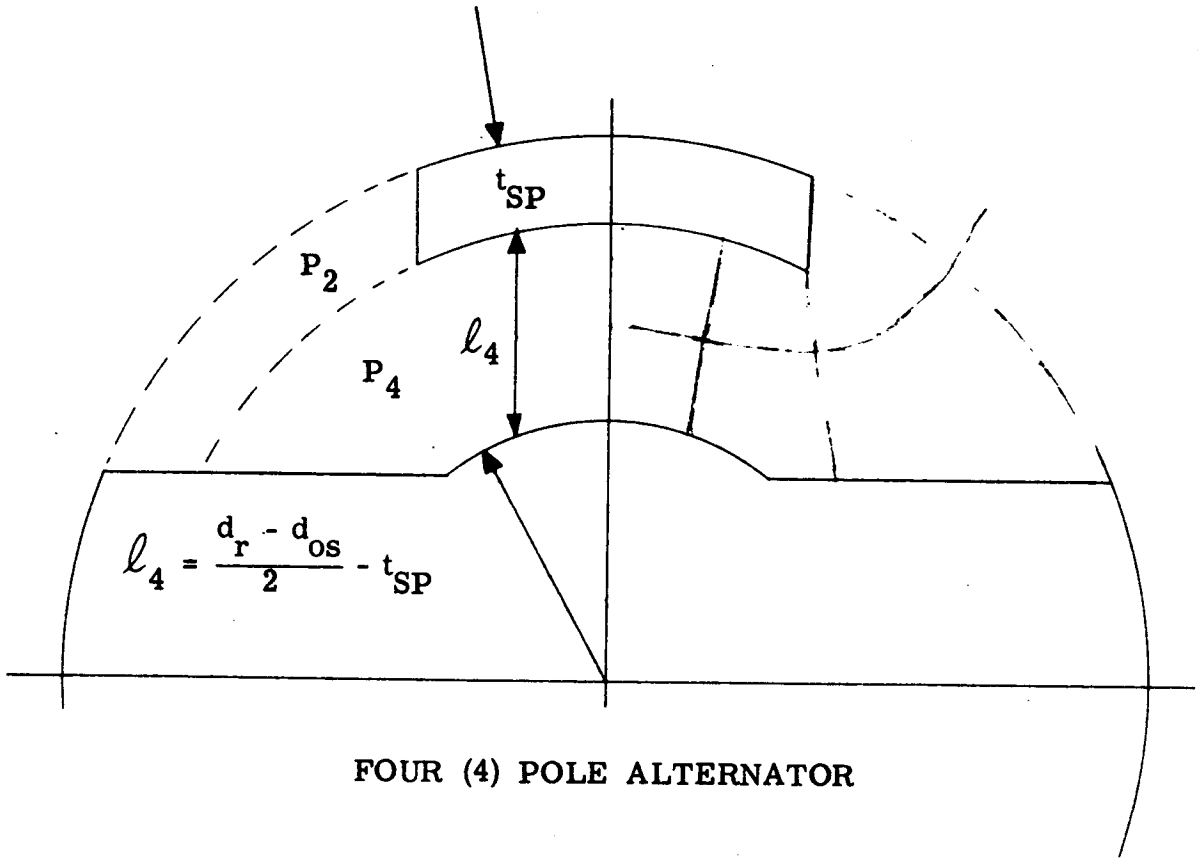

FOUR (4) POLE ALTERNATOR

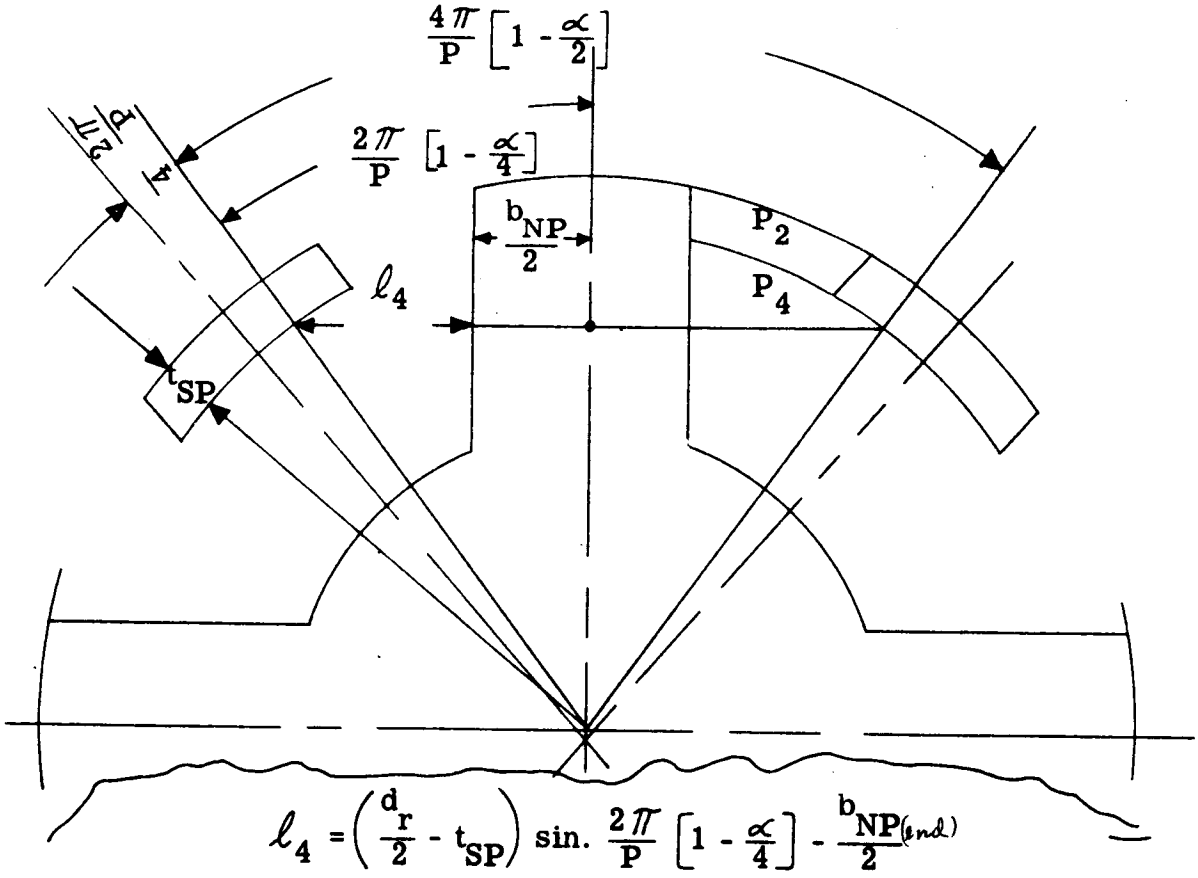

FIG. 8

EIGHT (8) POLE ALTERNATOR

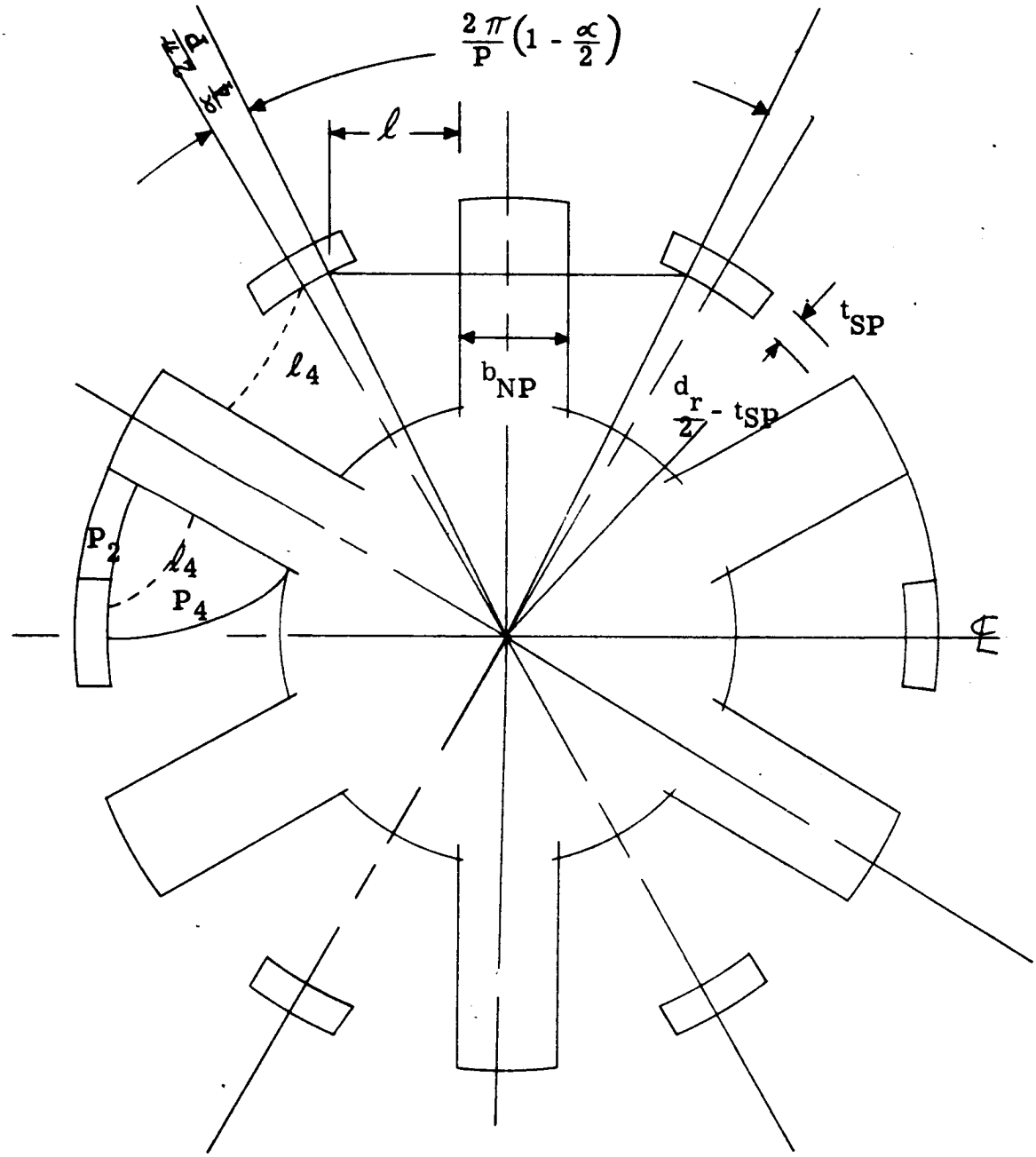

TWELVE (12) POLE ALTERNATOR

$$\ell_4 = \left(\frac{d_r}{2} - t_{SP}\right) \sin.\frac{2\pi}{P}\left[1 - \frac{\alpha}{4}\right] - \frac{b_{NP(end)}}{2}$$

Figure 9

When (6) $\geq$ 6 and $b_{np}(end) \neq b_{np}(mid)$

$$P_4 = 6.28 \frac{\left[\frac{(d_r)}{2} - (T_{sp})\right]\left[\frac{1}{4}\sqrt{\left[(b_{np}(mid) - (b_{np}(end)\right]^2 + (\ell_{np})^2} + \frac{(\ell_1)}{2}\right]}{(\ell 4a)} (P)$$

$$= 6.28 \frac{\left[\frac{(11a)}{2} - (78)\right]\left[\frac{1}{4}\sqrt{\left[(76)-(76)\right]^2 + (76)^2} + \frac{(80)}{2}\right]}{(83)} (6)$$

(84) P_5 <u>COIL LEAKAGE PERMEANCE TO A NORTH POLE</u> - This input can be either 0.0 or the actual value if available. Refer to Item (77a) for explanation. See Figure 10 for location.

$$P_5 = 3.19 \frac{(b_{np}(end)(\ell_6)\ \frac{2}{3}\ (P)}{(\ell_c)}$$

$$= 3.19 \frac{(76)(85)\ \frac{2}{3}\ (6)}{(84)}$$

Where ℓ_c = length of leakage path P_5 and must be specified on the input sheet. Refer to Figure 10 for location.

NOTE: This covers the leakage for both ends of rotor.

(85) P_6 <u>COIL LEAKAGE PERMEANCE TO SOUTH POLE</u> - This input can be either 0.0 or the actual value if available. Refer to Item (77a) for explanation. See Figure 11 for location.

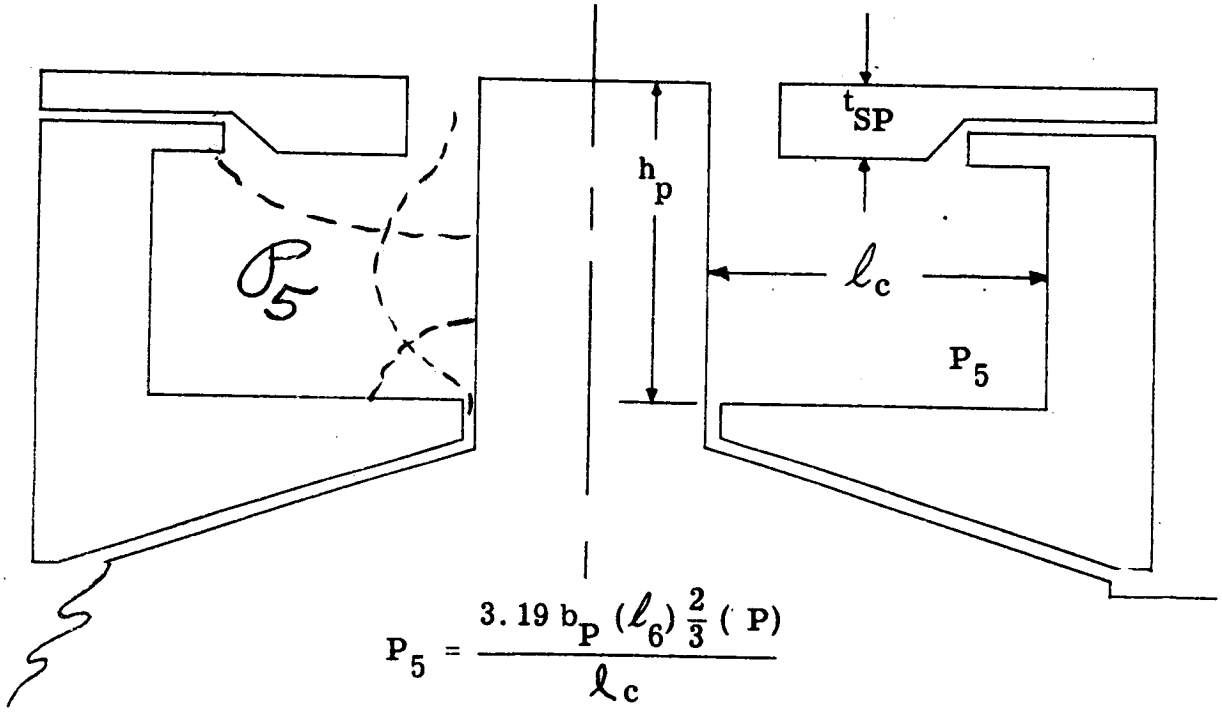

$$P_5 = \frac{3.19\, b_P\, (\ell_6)\, \frac{2}{3}\, (\ P)}{\ell_c}$$

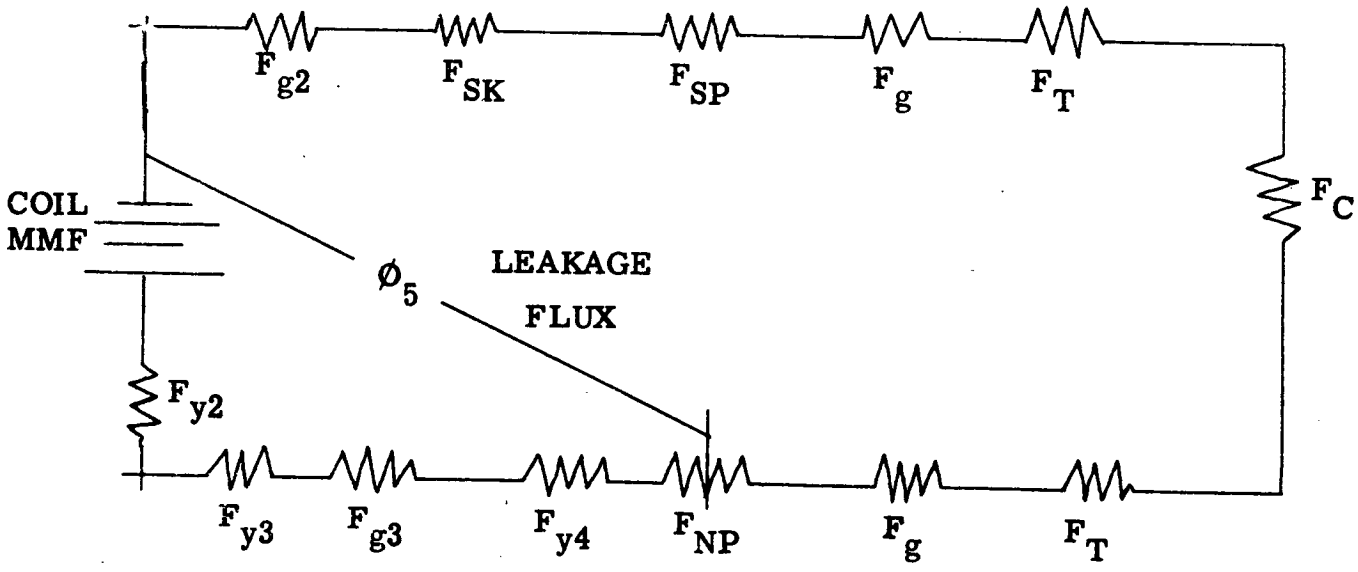

Figure 10

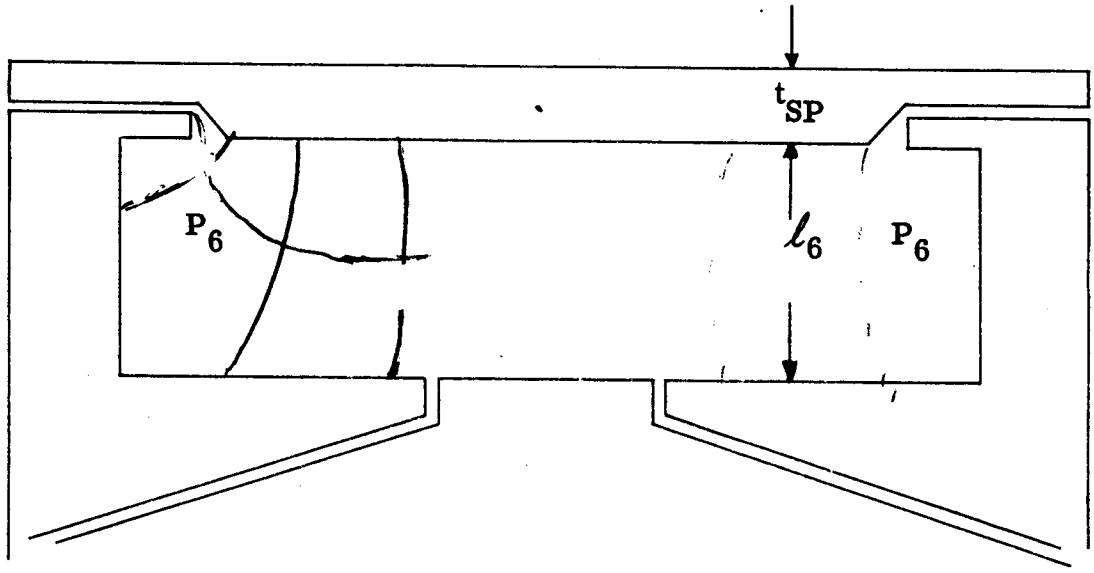

FLUX LEAKAGE ACROSS FIELD COILS

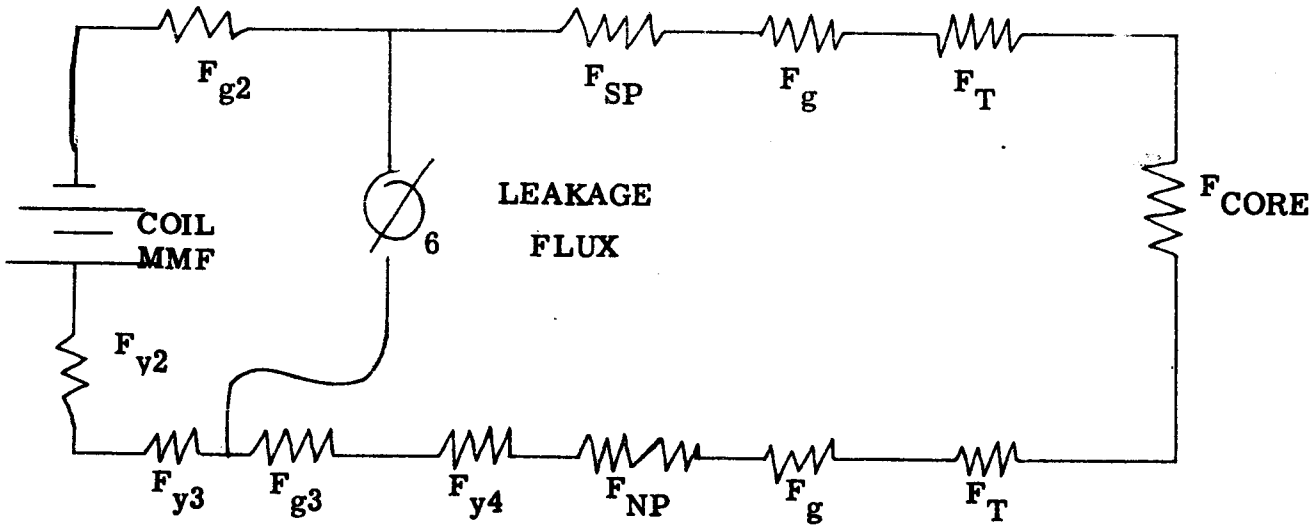

$$P_6 = \frac{3.19\,\ell_c \propto (d_r - 2t_{SP})\,\frac{\pi}{P}(P)}{\ell_6}$$

$$= \frac{3.19\,\ell_c \propto (d_r - 2t_{SP})\,\pi}{\ell_6}$$

FIGURE 11

Leakage Fluxes ϕ_5 and ϕ_6
(Leakage across the field coil ϕ_6,
and through the field coil ϕ_5)

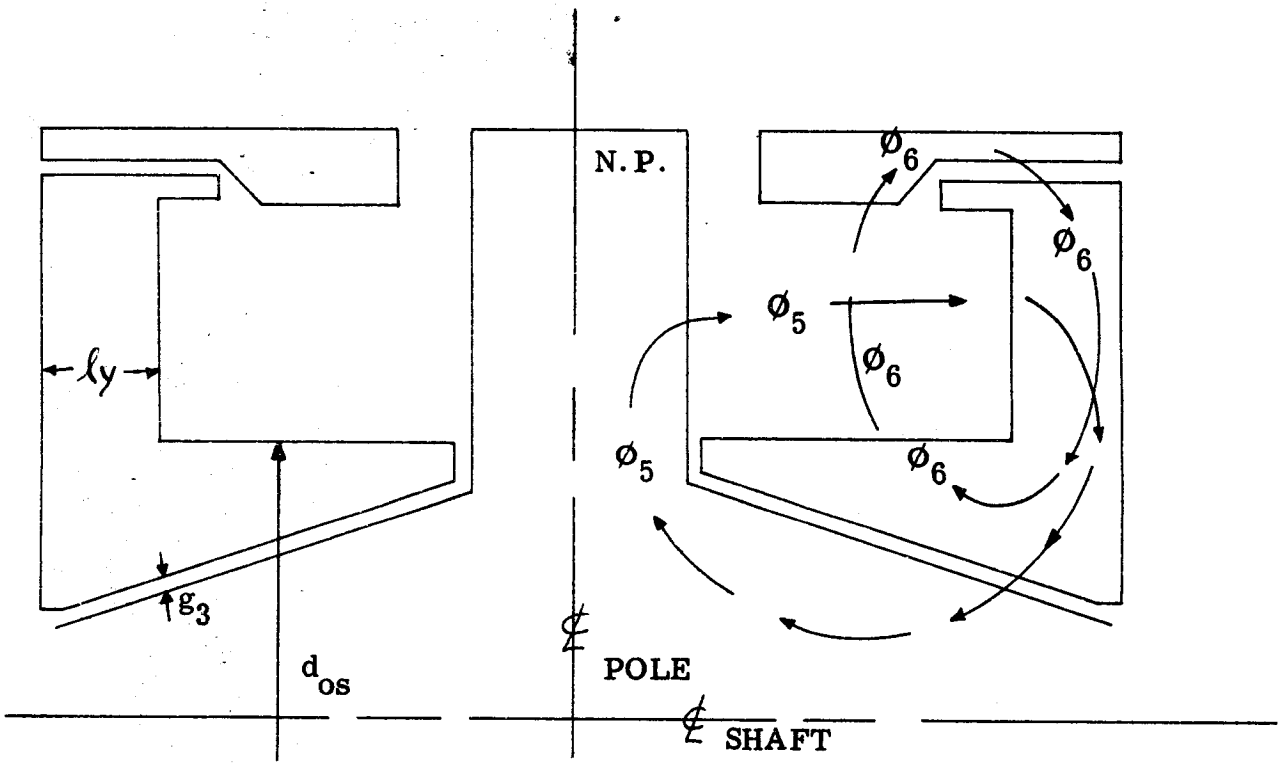

d_{os} = diameter of outer shaft

A_{y2} = area of yoke at smallest section

$A_{y2} = (d_{os})(\ell y)\pi$

The leakage flux ϕ_5 and ϕ_6 add to the flux in the yoke member y_2 but of the two leakage fluxes, only ϕ_5 adds to the flux crossing air gap g_3.

Figure 12

LEAKAGE FLUX FROM STATOR
BACK-IRON TO ROTOR SKIRT - PATH 7

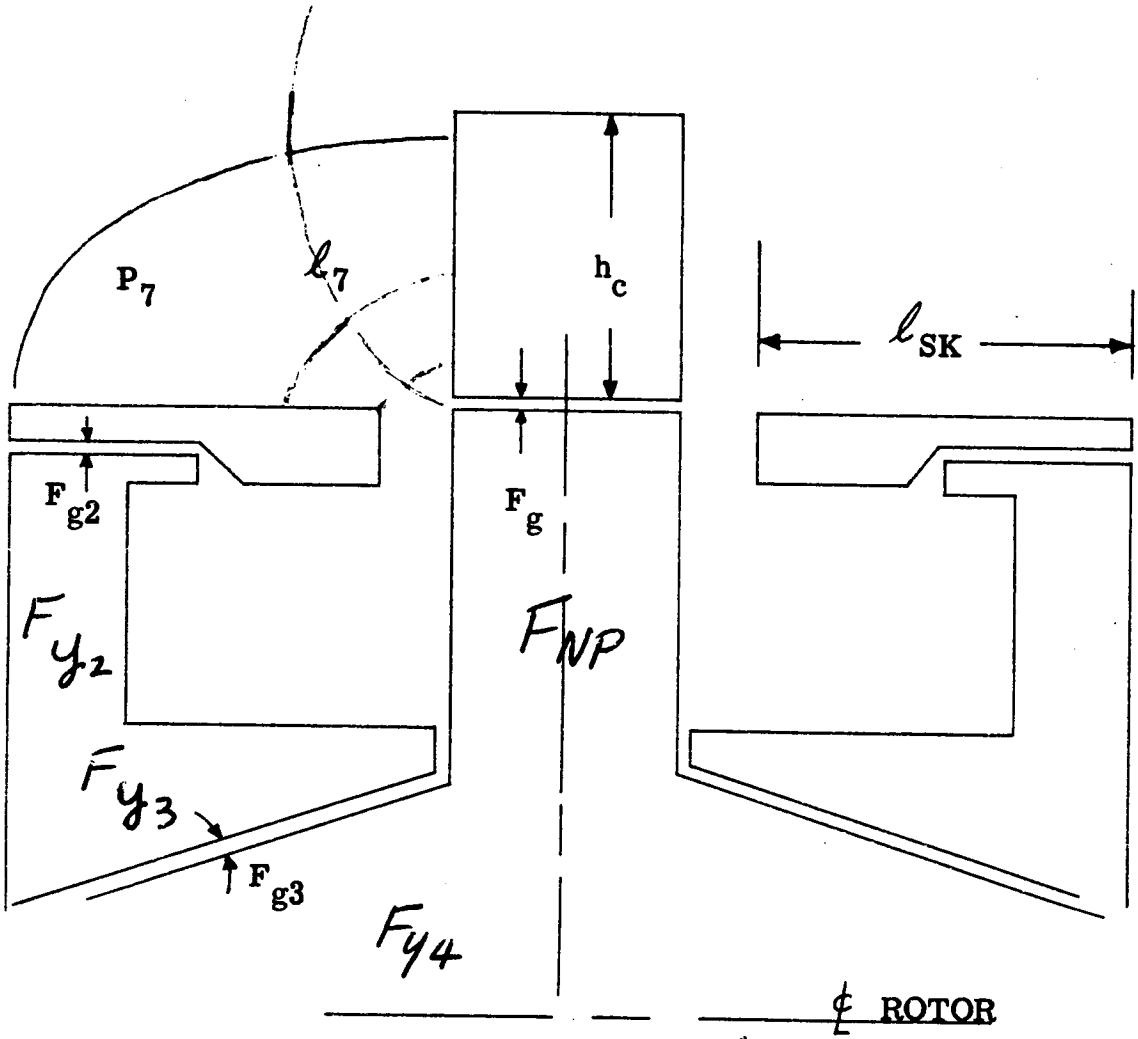

$$P_7 = \frac{3.19\,(d_r + h_c)\,(h_c + \ell_{SK})}{2_{hc}}$$

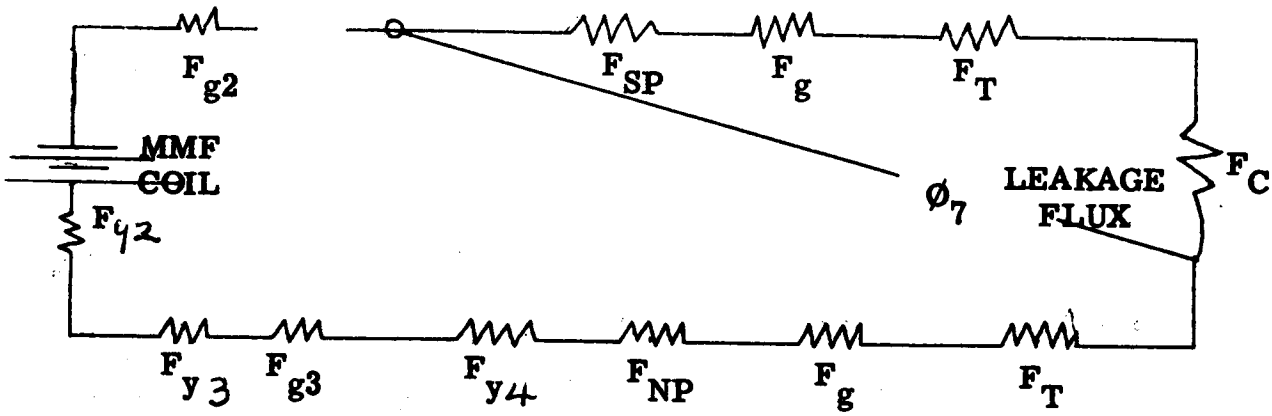

FIGURE 13

$$P_6 = \frac{3.19(\ell_c)(\alpha)\left[(d_r)-2(T_{sp})\right]\frac{\pi}{(P)}(P)}{\ell_6}$$

$$= \frac{3.19(84)(77)\left[(11a)-2(78)\right]\frac{\pi}{(6)}(6)}{(85)}$$

Where ℓ_6 = Length of leakage path P_6 and must be specified on the input sheet. Refer to Figure 11 for location.

NOTE: This covers the leakage for both ends of the rotor.

(86) P_7 STATOR CORE TO ROTOR SKIRT FLUX LEAKAGE - Permeance path. This input can be either 0.0 or the actual value if available. Refer to Item (77a) for explanation. See Figure 13 for location.

$$P_7 = 3.19\,\frac{\frac{\pi}{4}\left[(d_r)+(h_c)+(h_s)\right]\left[(h_c)+(h_s)+(\ell_{sk})\right]}{(\ell_7)}$$

$$P_7 = 3.19\,\frac{\frac{\pi}{4}\left[(11a)+(24)+(22)\right]\left[(24)+(22)+(78)\right]}{(86)}$$

Where $\ell_7 = \frac{\pi\left[(h_c)+(h_s)\right]}{2} = \frac{\pi\left[(24)+(22)\right]}{2}$

The leakage is from 1/2 the stator end surface calculated on each side of the stator, making the total leakage surface calculated as follows:

(88) ϕ_T TOTAL FLUX IN KILOLINES

$$\phi_T = \frac{6(E)10^6}{(C_W)(N_e)(RPM)} \quad \frac{6(3)10^6}{(72)(45)(17)}$$

(89) $\phi'_{\ell 7}$ ESTIMATED VALUE OF LEAKAGE FLUX ϕ_7

$$\phi'_{\ell 7} = .01\ (\phi_T)$$

$$= .01\ (88)$$

Complete the next set of calculations Item (90) through Item (99) using $\phi'_{\ell 7}$, the estimated value. If the calculated value ($\phi_{\ell 7}$) Item (99) agrees within $\pm 10\%$ of the estimated value ($\phi'_{\ell 7}$), Item (89), use all of the items, (90) through (99) as final and proceed on with calculations. If the calculated value $\phi_{\ell 7}$, Item (99), does not agree within $\pm 10\%$ of the estimated value ($\phi'_{\ell 7}$) then recalculate items (89) through (99) using $\phi_{\ell 7}$ item (99) as the estimated value for $\phi'_{\ell 7}$.

(90) ϕ'_T ESTIMATED TOTAL FLUX - including estimated value of $\phi_{\ell 7}$

$$\phi'_T = (\phi_T) + (\phi'_{\ell 7})$$

$$= (88) + (89)$$

(91) B'_T ESTIMATED STATOR TOOTH DENSITY

$$B'_T = \frac{\phi'_T}{(\phi)(\ell_s)(b_t\ 1/3)} = \frac{(90)}{(23)(17)(57a)}$$

(92) ϕ_P FLUX PER POLE

$$\phi_P = \frac{(\phi_T)(C_P)}{(P)} \quad \frac{(88)(73)}{(6)}$$

(93) ϕ'_P ESTIMATED FLUX PER POLE including leakage flux ϕ_7

$$\phi'_P = \frac{(\phi'_T)(C_P)}{(P)} = \frac{(90)(73)}{(6)}$$

(94) B'_c ESTIMATED STATOR CORE DENSITY

$$B'_c = \frac{(\phi'_P)}{2(h_c)(\ell_s)} = \frac{(92)}{2(24)(17)}$$

(95) B'_g ESTIMATED MAIN GAP DENSITY

$$B'_g = \frac{\phi'_T}{\pi(d)(\ell)} \quad \frac{(90)}{\pi(11)(13)}$$

(96) F'_g ESTIMATED MAIN GAP AMPERE TURNS

$$F'_g = \frac{(B'_g)(g_e)'}{3.19} \times 10^3 = \frac{(95)(69)}{3.19} \times 10^3$$

(97) F'_T ESTIMATED STATOR TOOTH AMPERE TURNS

$$F'_T = (h_s)\left[\text{NI/inch at density } (B'_t)\right]$$

$$= (22)\left[\begin{array}{l}\text{look up on stator magnetization curve} \\ \text{given in (18) at density (91)}\end{array}\right]$$

(98) F'_c ESTIMATED STATOR CORE AMPERE TURNS

$$F'_c = \left\{\frac{\pi\left[(D) - (h_c)\right]}{4(P)}\right\}\left[\text{NI/inch at density } (B'_c)\right]$$

$$F'_c = \left\{\frac{\pi\left[(12)-(24)\right]}{4(6)}\right\}\left[\begin{array}{l}\text{Look up on stator magnetization} \\ \text{curve at density (94)}\end{array}\right]$$

(99) $\phi_{\ell 7}$ CALCULATED VALUE OF LEAKAGE FLUX through path ℓ_7.

See Figure 13 . Leakage from stator back iron to rotor skirt. (In kilolines).

$$\phi_{\ell 7} = (P_7)\left[(F'_g) + (F'_T) = (F'_c)\right] \times 10^{-3}$$

$$= (86)\left[(96) + (97) + (98)\right] \times 10^{-3}$$

Next compare the estimated value of $\phi'_{\ell 7}$, Item (89) with the calculated value of $\phi_{\ell 7}$, Item (99).

If $1.10\ (\phi_{\ell 7}) \geqq (\phi'_{\ell 7}) \geqq .90\ (\phi_{\ell 7})$ then use $\phi_{\ell 7}$ and continue on with calculations. If $\phi_{\ell 7}$ does not fall within the limits given above, then recalculate Item (89) through (99) using $\phi_{\ell 7}$, Item (99) as estimated value of $\phi'_{\ell 7}$.

(100) $\phi_{\ell 1}$ POLE HEAD END LEAKAGE FLUX. (In kilolines)

$$\phi_{\ell 1} = (P_1)\left[2(F'_g) + 2(F'_T) + 2(F'_c)\right] \times 10^{-3}$$

$$= (80)\left[2(96) + 2(97) + 2(98)\right] \times 10^{-3}$$

(101) $\phi_{\ell 2}$ POLE HEAD SIDE LEAKAGE. (In kilolines)

$$\phi_{\ell 2} = (P_2)\left[2(F'_g) + 2(F'_T) + 2(F'_c)\right] \times 10^{-3}$$

$$= (81)\left[2(96) + 2(97) + 2(98)\right] \times 10^{-3}$$

(102) $\phi_{\ell 3}$ POLE BODY END LEAKAGE. (In kilolines)

$$\phi_{\ell 3} = (P_3)\left[2(F'_g) + 2(F'_T) + 2(F'_c)\right] \times 10^{-3}$$

$$= (82)\left[2(96) + 2(97) + 2(98)\right] \times 10^{-3}$$

(103) $\phi_{\ell 4}$ POLE BODY SIDE LEAKAGE. (In kilolines)

$$\phi_{\ell 4} = (P_4)\left[2(F'_g) + 2(F'_T) + 2(F'_c)\right] \times 10^{-3}$$

$$= (83)\left[2(96 + 2(97) + 2(98)\right] \times 10^{-3}$$

(104) B'_{np} NORTH POLE FLUX DENSITY - First calculation. This item will be recalculated in Step 116 including flux $\phi_{\ell 5}$.

$$B'_{np} = \frac{\phi_p + \dfrac{(\phi_{\ell 1}) + (\phi_{\ell 2}) + (\phi_{\ell 3}) + (\phi_{\ell 4}) + (\phi_{\ell 7})}{P}}{(a_{np})}$$

$$= \frac{(92) + \dfrac{(100) + (101) + (102) + (103) + (99)}{(6)}}{(79)}$$

(105) B_{sp} SOUTH POLE FLUX DENSITY

$$B_{sp} = \frac{(\phi_p) + \dfrac{(\phi_{\ell 1}) + (\phi_{\ell 2}) + (\phi_{\ell 3}) + (\phi_{\ell 4}) + (\phi_{\ell 7})}{(P)}}{2(a_{sp})}$$

$$= \frac{(92) + \dfrac{(100) + (101) + (102) + (103) + (99)}{(6)}}{2\,(79a)}$$

(106) F'_{np} NORTH POLE AMPERE TURN DROP - First calculation. This item will be recalculated in Item (117) including Flux $\phi_{\ell 5}$.

$$F'_{np} = (h_{np})\left[\text{NI/inch at density } (B'_{np})\right]$$

$$= (78)\left[\begin{array}{l}\text{Look up on north pole magnetization} \\ \text{curve given in (18) at density (104).}\end{array}\right]$$

(107) F_{sp} SOUTH POLE AMPERE TURN DROP

When $b_{np}(end) = b_{np}(mid)$

$$F_{sp} = \frac{(\ell_{sp})}{3}\left[\text{NI/inch at density } (B_{sp})\right]$$

$$F_{sp} = \frac{(76)}{3}\left[\text{Look up on south pole or tube magnetization curve given in (18) at density (105)}\right]$$

When $b_{np}(end) \neq b_{np}(mid)$

$$F_{sp} = \frac{(\ell_{sp})}{2}\left[\text{NI/inch at density } (B_{sp})\right]$$

$$= \frac{(76)}{2}\left[\text{Look up on south pole or tube magnetization curve given in (18) at density (105)}\right]$$

(108) ϕ_{g2} AUXILIARY AIR GAP g2 FLUX

$$\phi_{g2} = \frac{\left[(\phi_p)(P)\right] + (\phi_{\ell 1}) + (\phi_{\ell 2}) + (\phi_{\ell 3}) + (\phi_{\ell 4}) + (\phi_{\ell 7})}{4}$$

$$= \frac{\left[(92)(6)\right] + (100) + (101) + (102) + (103) + (99)}{4}$$

(109) B'_{g2} FLUX DENSITY IN AUXILIARY GAP - First calculation.

$$B'_{g2} = \frac{(\phi_{g2})}{(A_{g2})} = \frac{(108)}{(70)}$$

(110) F'_{g2} AMPERE TURN DROP ACROSS AUXILIARY AIR GAP - First calculation.

$$F'_{g2} = \frac{(B'_{g2})(g_2)}{3.19} \times 10^3 = \frac{(109)(59a)}{3.19} \times 10^3$$

(112) A_{y4} AREA OF SHAFT - in inches^2 - cross-sectional to flux in shaft.

$$A_{y4} = \left[\frac{\pi(dos)^2}{4}\right] - \left[\frac{\pi(d_Q)^2}{4}\right]$$

$$= \frac{\pi(78)^2}{4} - \frac{\pi(78)^2}{4}$$

NOTE: When a solid shaft is used, the second term will drop out because $d_Q = 0$.

(113) B_{y4} FLUX DENSITY OF SHAFT

$$B_{y4} = \frac{(\phi_p)(P) + (\phi_{\ell 1}) + (\phi_{\ell 2}) + (\phi_{\ell 3}) + (\phi_{\ell 4}) + (\phi_{\ell 7})}{4\ (A_{y4})}$$

$$= \frac{(92)(6) + (100) + (101) + (102) + (103) + (99)}{4\ (112)}$$

(114) F_{y4} SHAFT AMPERE TURN DROP

$$F_{y4} = (\ell_{y4})\left[\text{NI/inch at density } (B_{y4})\right]$$

$$= (78)\left[\begin{array}{l}\text{Look up on shaft magnetization curve} \\ \text{given in (18) at density (113)}\end{array}\right]$$

NOTE: This magnetization curve for shaft and spider can be synthesized into one curve when the effective cross-sectional area of the shaft is made up of two separate materials. This does not affect the present computer program. Only the magnetization curve that is submitted must be corrected.

(115) $\phi'_{\ell 5}$ LEAKAGE FLUX FROM NOTH POLE (SPIDER POLE) THROUGH THE FIELD COIL - First calculation.

Items (116) through (118) will be calculated using this value of $\phi'_{\ell 5}$. A new value for $\phi_{\ell 5}$ will then be calculated in Item (118). This new value must be within ±10% of Item (115) or calculation (115) through (118) must be repeated using the new value of (F_{np}) Item (117) in (115).

$$\phi'_{\ell 5} = P_5\left[(F_{g2})+(F_{sp})+2(F'_g)+2(F'_T)+2(F'_c)+(F'_{np})\right] \times 10^{-3}$$

$$= (84)\left[(110)+(107)+2(96)+2(97)+2(98)+(106)\right] \times 10^{-3}$$

(116) B_{np} NORTH POLE FLUX DENSITY - This value will supersede the value calculated in (104).

$$B_{np} = \frac{\phi_p + \dfrac{(\phi_{\ell 1})+(\phi_{\ell 2})+(\phi_{\ell 3})+(\phi_{\ell 4})+(\phi_{\ell 7})+(\phi'_{\ell 5})}{(P)}}{a_{np}}$$

$$= \frac{(92) + \dfrac{(100)+(101)+(102)+(103)+(99)+(115)}{(6)}}{(79)}$$

(117) F_{np} NORTH POLE AMPERE TURN DROP - This value will supersede the value calculated in (106).

$$F_{np} = h_{np}\left[\text{NI/inch at density } (B_{np})\right]$$

$$= (78)\left[\begin{array}{l}\text{Look up on north pole magnetization} \\ \text{curve given in (18) at density (116).}\end{array}\right]$$

(118) $\phi_{\ell 5}$ LEAKAGE FLUX FROM NOTH POLE (Spider Pole) through the field coil. Second Calculation.

$$\phi_{\ell 5} = P5\left[(F_{g2})+(F_{sp})+2(F'_g)+2(F'_T)+2(F'_c)+(F_{np})\right] \times 10^{-3}$$

$$= (84)\left[(110)+(107)+2(96)+2(97)+2(98)+(117)\right] \times 10^{-3}$$

This item, $\phi_{\ell 5}$, must be within $\pm 10\%$ of the first calculation $\phi_{\ell 5}$, Item (115), or must recalculate Items (115) through (118) using (F_{np}), Item (117), in the second calculation of (115).

(119) B_{g3} FLUX DENSITY IN AIR GAP g_3

$$B_{g3} = \frac{(\phi_p)(P)+(\phi_{\ell 1})+(\phi_{\ell 2})+(\phi_{\ell 3})+(\phi_{\ell 4})+(\phi_{\ell 7})+(\phi_{\ell 5})}{4(A_{g3})}$$

$$= \frac{(92)(6)+(100)+(101)+(102)+(103)+(99)+(118)}{4(70a)}$$

(120) F_{g3} AMPERE TURN DROP ACROSS GAP g_3

When (59b) = 2.0 calculate as follows:

$$F_{g3} = \frac{B_{g3}}{3.19}(g_3) \times 10^3 = \frac{(119)}{3.19}(59c) \times 10^3$$

When (59b) = 1.0, calculate as follows:

$$F_{g3} = \frac{B_{g3}}{3.19}(g_{3e}) \times 10^3 = \frac{(119)}{3.19}(59f) \times 10^3$$

(121) $\phi_{\ell 6}$ LEAKAGE FLUX ACROSS FIELD COIL FROM INNER YOKE TO SOUTH POLE TUBE in kilolines.

$$\phi_{\ell 6} = (P_6)\left[(F_{sp})+2(F'_g)+2(F'_T)+2(F'_c)+(F_{np})+(F_{y4})+(F_{g3})\right] \times 10^{-3}$$

$$= (85)\left[(107)+2(96)+2(97)+2(98)+(117)+(114)+(120)\right] \times 10^{-3}$$

(122) B_{g2} FINAL FLUX DENSITY IN AUXILIARY GAP g_2

$$= \frac{(\phi_p)(P)+(\phi_{\ell 1})+(\phi_{\ell 2})+(\phi_{\ell 3})+(\phi_{\ell 4})+(\phi_{\ell 7})+(\phi_{\ell 6})}{4(A_{g2})}$$

$$= \frac{(92)(6)+(100)+(101)+(102)+(103)+(99)+(121)}{4(69a)}$$

(123) F_{g2} FINAL $F_{g2} = \frac{(B_{g2})(g_2)}{3.19} \times 10^3 = \frac{(122)(59a)}{3.19} \times 10^3$

(124) A_{y2} CROSS-SECTIONAL AREA OF YOKE location per Figure 12

$$A_{y2} = \pi(d_{os})(\ell_y)$$

$$= \pi(78)(78)$$

(125) B_{y2} DENSITY OF COIL YOKE

$$B_{y2} = \frac{(\phi_p)(P) + (\phi_{\ell 1})+(\phi_{\ell 2})+(\phi_{\ell 3})+(\phi_{\ell 4})+(\phi_{\ell 7})+(\phi_{\ell 5})}{4(A_{y2})}$$

$$= \frac{(92)(6)+(100)+(101)+(102)+(103)+(99)+(121)}{4(124)}$$

(126) F_{y2} AMPERE TURN DROP IN COIL YOKE

$$F_{y2} = \frac{(h_y)}{3}\left[\text{NI/inch at density } (B_{y2})\right]$$

$$= \frac{(78)}{3}\left[\begin{array}{l}\text{Look up on yoke magnetization curve} \\ \text{given in (18) at a density (125)}\end{array}\right]$$

(127) F_{NL} TOTAL AMPERE TURNS AT NO LOAD PER CIRCUIT

$$F_{NL} = 2(F'_g)+2(F'_T)+2(F'_c)+(F_{np})+(F_{sp})+(F_{g2})+(F_{y2})+(F_{g3})+(F_{y4})$$

$$= 2(96)+(97)+(98)+(117)+(107)+(123)+(126)+(120)+(114)$$

(127a) I_{FNL} NO LOAD FIELD CURRENT PER COIL

$$I_{FNL} = \frac{F_{NL}}{N_F} = \frac{(124)}{(146)}$$

(127b) E_{FNL} NO LOAD FIELD VOLTS PER COIL

$$E_{FNL} = (I_{FNL})(R_{F(cold)})$$

$$= (127a)(154)$$

(127c) S_F CURRENT DENSITY IN FIELD CONDUCTOR - At no load

$$S_F = \frac{(I_{FNL})}{(a_{cf})} = \frac{(127a)}{(153)}$$

(128) A AMPERE CONDUCTORS per inch - The effective ampere conductors per inch of stator periphery. This factor indicates the "specific loading" of the machine. Its value will increase with the rating and size of the machine and also will increase with the number of poles. It will decrease with increases in voltage or frequency. A is generally higher in single phase machines than in polyphase ones.

$$A = \frac{(I_{PH})(n_s)(K_p)}{(C)\ (\tau_s)} = \frac{(8)(30)(44)}{(32)(26)}$$

(129) X

REACTANCE FACTOR - The reactance factor is the quantity by which the specific permeance must be multiplied to give percent reactance. It is the percent reactance for unit specific permeance, or the percent of normal voltage induced by a fundamental flux per pole per inch numerically equal to the fundamental armature ampere turns at rated current. Specific permeance is defined as the average flux per pole per inch of core length produced by unit ampere turns per pole.

$$X = \frac{100(A)(K_d)}{\sqrt{2}\,(C_1)(B_g) \times 10^3} = \frac{100(128)(43)}{\sqrt{2}\,(71)\,(95) \times 10^3}$$

(130) X_ℓ

LEAKAGE REACTANCE - The leakage reactance of the stator for steady state conditions. When (5) = 3, calculate as follows:

$$X_\ell = X\left[(\lambda_i) + (\lambda_E)\right] = (79)\left[(62) + (64)\right]$$

In the case of two phase machines a component due to belt leakage must be included in the stator leakage reactance. This component is due to the harmonics caused by the concentration of the MMF into a small number of phase belts per pole and is negligible for three phase machines. When (5) = 2, calculate as follows:

$$\lambda_B = \frac{0.1(d)}{(P)(g_e)}\left[\frac{\sin\left[\frac{3(y)}{(m)(q)}\right]90^\circ}{(K_P)}\right] = \frac{0.1(11)}{(6)(69)}\left[\frac{\sin\left[\frac{3(31)}{(5)(25)}\right]90^\circ}{(44)}\right]$$

$X_\ell = X\left[(\lambda_i) + (\lambda_E) + (\lambda_B)\right]$ where $\lambda_B = 0$ for 3 phase machines.

$$X_\ell = (79)\left[(62) +)64) + (80)\right]$$

(131) X_{ad} REACTANCE - direct axis - This is the fictitious reactance due to armature reaction in the direct axis.

$$X_{ad} = \frac{.9(n_e)(I_{ph})(C_m)(K_d)}{P\left[2(F'_g)+(F_{g2})+(F_{g3})\right]} \times 100$$

$$X_{ad} = \frac{.9(45)(8)(74)(43)}{6\left[2(96)+(123)+(120)\right]} \times 100$$

(132) X_{aq} REACTANCE - Quadrature axis - This is the fictitious reactance due to armature reaction in the quadrature axis.

$$X_{aq} = \frac{(C_q)(X_{ad})}{(C_m)(C_1)}$$

$$X_{aq} = \frac{(75)(131)}{(74)(71)}$$

(133) X_d SYNCHRONOUS REACTANCE - direct axis - the steady state short circuit reactance in the direct axis.

$$X_d = (X_\ell) + (X_{ad}) = (130) + (131)$$

(134) X_q SYNCHRONOUS REACTANCE - quadrature axis - The steady state short circuit reactance in the quadrature axis.

$$X_q = (X_\ell) + (X_{aq}) = (130) + (132)$$

(135) -- **DAMPER SLOT DIMENSIONS**

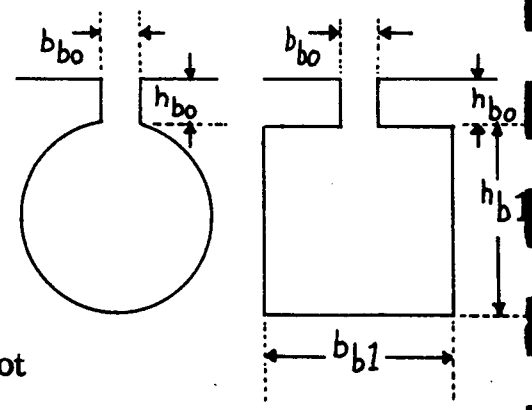

b_{bo} - width of slot opening

h_{bo} - height of slot opening

h_{b1} - height of bar section of slot

b_{b1} - width of rectangular slot

(136) -- DAMPER BAR DIA OR WIDTH in inches

(137) h_{bl} DAMPER BAR THICKNESS in inches - Damper bar thickness considered equal to damper bar slot height (h_b) per Item (135). Set this item = 0 for round bar.

(138) n_b NUMBER OF DAMPER BARS PER POLE

(139) ℓ_b DAMPER BAR LENGTH in inches

(140) τ_b DAMPER BAR PITCH in inches

(141) ρ_D RESISTIVITY of damper bar @ 20°C in micro ohm-inches - Refer to table given in Item (51) for conversion factors.

(142) X_D °C DAMPER BAR TEMP °C - Input temp at which damper losses are to be calculated.

(143) $\rho_{D(hot)}$ RESISTIVITY of damper bar @ X_D °C

$$\rho_{D(hot)} = (\rho_D)\left[\frac{(X_D{}^{o}C) + 234.5}{254.5}\right] = (141)\left[\frac{(142) + 234.5}{254.5}\right]$$

(144) a_{cd} CONDUCTOR AREA OF DAMPER BAR - Calculate same as stator conductor area

If (137) = 0

$a_{cd} = .25\pi$ (damper bar dia)^2 = $.25\pi(136)^2$

If (137) $\neq$ 0

$a_{cd} = (h_{bl})$ (damper bar width) = (137)(136)

(145) V_r PERIPHERAL SPEED - The velocity of the rotor surface in feet per minute

$$V_r = \frac{\pi(d_r)(RPM)}{12} = \frac{\pi(11a)(7)}{12}$$

(146) N_F NUMBER OF FIELD TURNS PER COIL

(147) ℓ_{tF} MEAN LENGTH OF FIELD TURN

(148) -- FIELD CONDUCTOR DIA OR WIDTH in inches

(149) -- FIELD CONDUCTOR THICKNESS in inches - Set this item = 0. for round conductor.

(150) $X_f{}^oC$ FIELD TEMP IN ^oC - Input temp at which full load field loss is to be calculated.

(151) ρ_f RESISTIVITY of field conductor @ 20°C in micro ohm-inches. Refer to table given in Item (51) for conversion factors.

(152) $\rho_{f(hot)}$ RESISTIVITY of field conductor at $X_f{}^oC$

$$\rho_{f(hot)} = \rho_f \left[\frac{(X_f{}^oC) + 234.5}{254.5}\right] = (151) \left[\frac{(150) + 234.5}{254.5}\right]$$

(153) a_{cf} CONDUCTOR AREA OF FIELD WINDING - Calculate same as stator conductor area (46) except substitute

(149) for (39)

(148) for (33)

(154) $R_{f(cold)}$ COLD FIELD RESISTANCE @ 20^oC per coil

$$R_{f(cold)} = (\rho_f) \frac{(N_F)(\ell_{tF})}{(a_{cf})} = (151) \frac{(146)(147)}{(153)} \times 10^{-6}$$

(155) $R_{f(hot)}$ HOT FIELD RESISTANCE - Calculated at $X_f{}^oC$ (103) - (Per coi

$$R_{f(hot)} = (\rho_{f\,hot}) \frac{(N_f)(\ell_{tf}) \times 10^{-6}}{(a_{cf})} = (152) \frac{(142)(147) \times 10^{-6}}{(153)}$$

(156) -- WEIGHT OF FIELD COIL in lbs. - per coil

The answer is given in lbs. based on the density of copper. If any other material is used, the answer on the output sheet can be converted by the designer by multiplying by the ratio of densities.

$$\#\text{'s of copper} = .321\ (N_c)(\ell_{tf})(a_{cf})$$
$$= .321\ (146)(147)(153)$$

(157) -- WEIGHT OF ROTOR IRON - Because of the large number of different pole shapes, one standard formula cannot

be used for calculating rotor iron weight. Therefore, the computer will not calculate rotor iron weight. The space is allowed on the input sheet for record purposes only. By inserting 0. in the space allowed for rotor iron weight, the computer will show "0." on the output sheet. If the rotor iron weight is available and inserted on input sheet, then the output sheet will show this same weight on the output sheet.

(158) λ_b PERMEANCE OF DAMPER BAR - The permeance of that portion of the damper bar that is embedded in pole iron.

For round slot

$$\lambda_b = 6.38\left[\frac{(h_{bo})}{(b_{bo})} + .62 + .5\right] = 6.38\left[\frac{(135)}{(135)} + .62 + .5\right]$$

For rectangular slot

$$\lambda_b = 6.38\left[\frac{(h_{bo})}{(b_{bo})} + \frac{(h_{b1})}{3(b_{b1})} + .5\right] = 6.38\left[\frac{(135)}{(135)} + \frac{(135)}{3(135)} + .5\right]$$

(159) λ_{pt} PERMEANCE OF END PORTION OF DAMPER BARS

$$\lambda_{pt} = 6.38\left\{\frac{(b_{np(end)} - (\tau_b)\ (n_b) - 1}{3(g_e)}\right\}$$

$$= 6.38\left\{\frac{(76) - (140)\ (138) - 1}{3(69)}\right\}$$

(160) X'_F THE EFFECTIVE FIELD LEAKAGE REACTANCE - The reactance which added to the stator leakage reactance gives the transient reactance X'_{du}.

When unit fundamental armature ampere turns are suddenly applied on the direct axis, an initial field current (I_f) will be induced. The value of this initial field current will be just enough to make the net flux interlinking the field because of the field current and the armature current zero. The field ampere turns will equal the armature ampere turns.

$$X'_F = X_{(\ell s)}^{(P)} \left[\frac{\left[\frac{C_1}{C_p}\right]^2 (P_g)^2}{2\pi P_e \frac{(g'_e)^2}{g_e}} \right] \times 10^{-6}$$

$$X'_F = (129) \frac{(6)}{(17)} \left[\frac{\left[\frac{(71)}{(73)}\right]^2 (160)}{2\pi (160a) \frac{(160)^2}{(69)}} \right] \times 10^{-6}$$

Where:

$$P_g = \frac{3.19\ (\tau_p)(\ell_s)(C_p)}{(g_e)} = \frac{3.19\ (41)(17)(73)}{(69)}$$

Where:

$$g'_e = (g_e) \left[\frac{2(F'_g) + (F_{g2}) + (F_{g3})}{2(F'_g)} \right]$$

$$= (69) \left[\frac{2(96) + (123) + (120)}{2(96)} \right]$$

(160a) P_e

$$P_e = \frac{\phi_{g2} \text{ @ NL}}{(I_{fNL})(N_F) \text{ @ NL}}$$

$$P_e = \frac{(108)}{(127a)(146)}$$

(161) L_F FIELD INDUCTANCE

$$L_F = 2(N_F)^2 \, P_e \, 10^{-8}$$

$$= 2(146)^2 \, (160a) \times 10^{-8}$$

(161a) λ_F SPECIFIC PERMEANCE OF FIELD

$$\lambda_F = P_1 + P_2 + P_3 + P_4 + P_5 + P_6$$

$$= (80) + (81) + (82) + (83) + (84) + (85)$$

(162) λ_{Dd} PERMEANCE OF DAMPER BAR - in direct axis

$$\lambda_{Dd} = \left\{ \cos\left[\frac{\{(n_b) - 1\}(\tau_b)\pi}{2(\tau_P)} \right] \right\} \left\{ \frac{\{(\lambda_b) + (\lambda_{Pt})\} \, (\lambda_F)}{\lambda_b + \lambda_{Pt} + \lambda_F} \right\}$$

$$= \left\{ \cos\left[\frac{\{(138) - 1\}(140)\pi}{2(41)} \right] \right\} \left\{ \frac{\{(158) + (159)\}(161a)}{(158) + (159) \; (161a)} \right\}$$

(163) X_{Dd} DAMPER LEAKAGE REACTANCE - in direct axis

$$X_{Dd} = X(\lambda_{Dd}) = (129)(162)$$

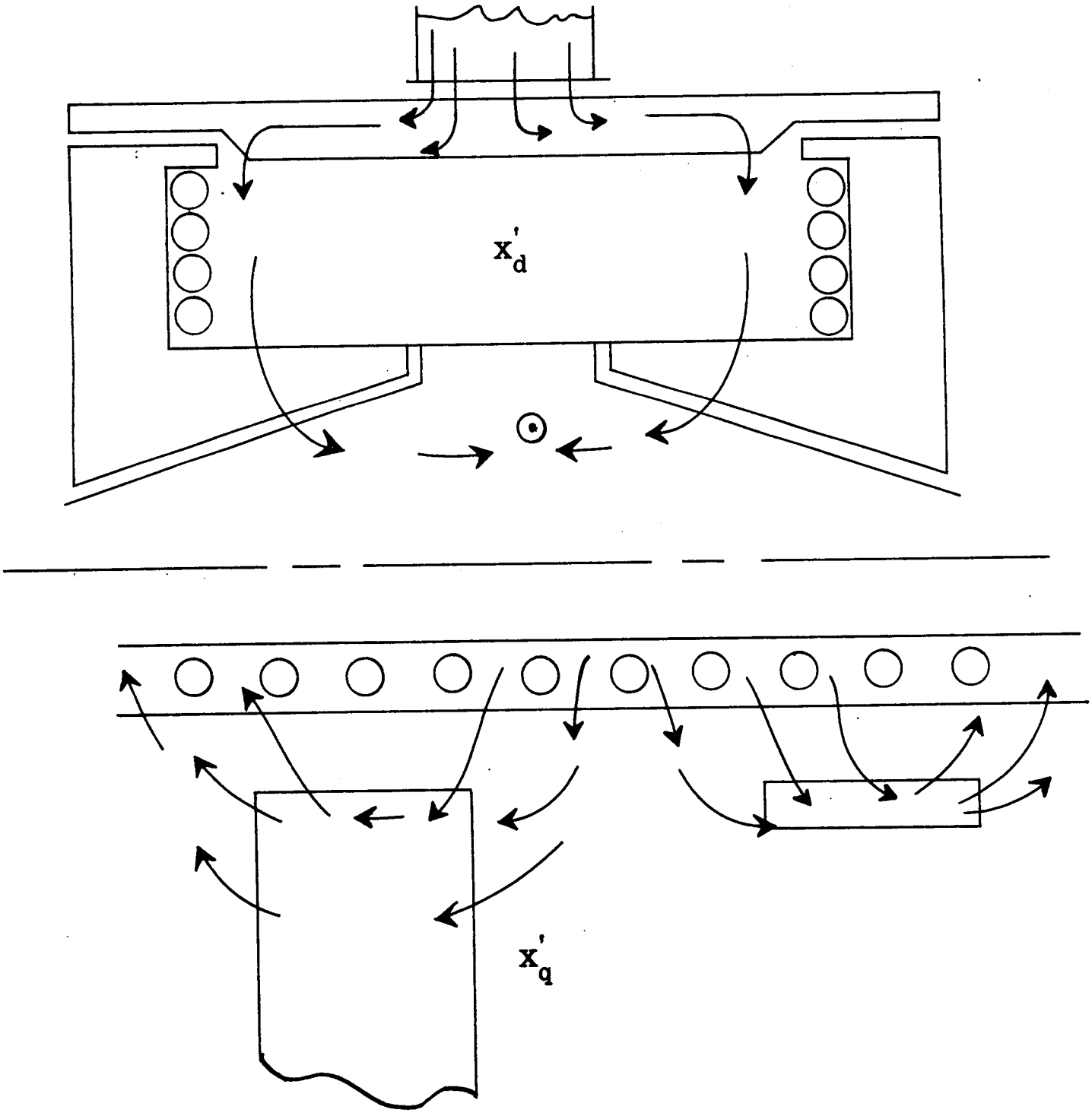

Figure 14

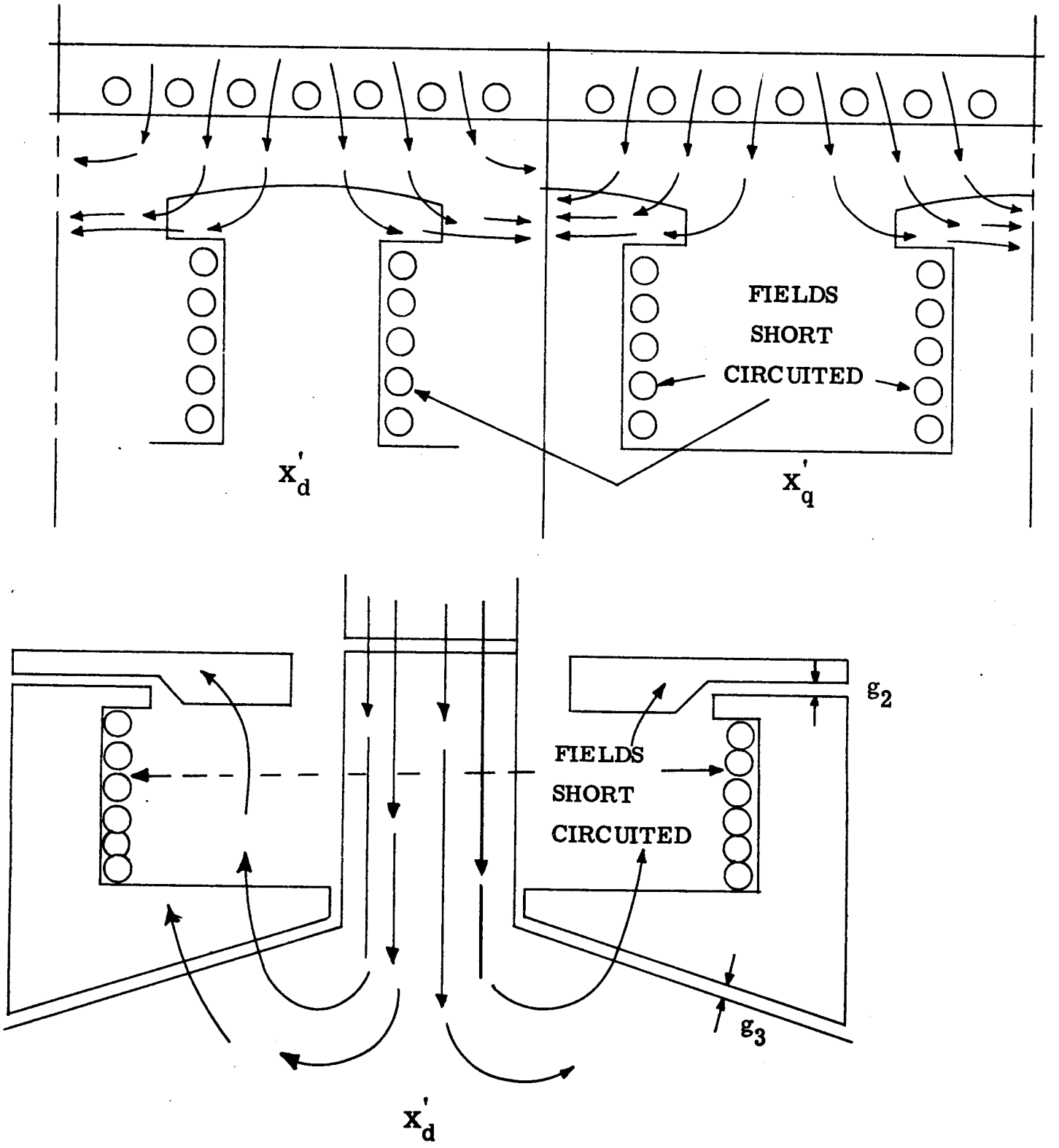
FIELDS
SHORT
CIRCUITED
x_d'
x_q'
g_2
FIELDS
SHORT
CIRCUITED
g_3
x_d'

Figure 15

(164) λ_{Dq} **PERMEANCE IN QUADRATURE AXIS**

For round slot

$$\lambda_{D_q} = \frac{20(\tau_b)}{(\tau_P)}\left[\frac{(h_{bo})}{(b_{bo})} + .62 + .5 + \frac{(g)}{(\tau_b)}\right]$$

$$= \frac{20(140)}{(41)}\left[\frac{(135)}{(135)} + .62 + .5 + \frac{(59)}{(140)}\right]$$

For rectangular slot

$$\lambda_{(Dq)} = \frac{20(\tau_b)}{(\tau_P)}\left[\frac{(h_{bo})}{(b_{bo})} + \frac{(h_{b1})}{3(b_{b1})} + .5 + \frac{(g)}{(\tau_b)}\right]$$

$$= \frac{20(140)}{(41)}\left[\frac{(135)}{(135)} + \frac{(135)}{3(135)} + .5 + \frac{(59)}{(140)}\right]$$

(165) X_{Dq} **DAMPER LEAKAGE REACTANCE** - in quadrature axis

$$X_{Dq} = X(\lambda_{Dq}) = (129)(164)$$

(166) X'_{du} **UNSATURATED TRANSIENT REACTANCE**

$$X'_{du} = (X_\ell) + (X_f) = (130) + (160)$$

(167) X'_d **SATURATED TRANSIENT REACTANCE**

$$X'_d = .88(X'_{du}) = .88(166)$$

(168) X''_d SUBTRANSIENT REACTANCE in direct axis

When damper bars exist, i.e., when (138) $\neq 0$

$$X''_d = (X_\ell) + (X_{Dd}) + (130) + (163)$$

When no damper bars exist, i.e. when (138) = 0

$$X''_d = (X'_d) = (167)$$

(169) X''_q SUBTRANSIENT REACTANCE in quadrature axis

When damper bar exists, i.e. when (138) $\neq 0$

$$X''_q = (X_\ell) + (X_{Dq}) = (130) + (164)$$

When no damper bars exist, i.e. when (138) = 0

$$X''_q = X_q = (134)$$

(170) X_2 NEGATIVE SEQUENCE REACTANCE - The reactance due to the field which rotates at synchronous speed in a direction opposite to that of the rotor

$$X_2 = \frac{X_m\left[4(\Sigma) + 4(\Sigma)^2 + (n)^2\right]}{n^2 + 4\left[1 + (\Sigma)\right]^2} + X_\ell$$

$$= \frac{(170)\left[4(170) + 4(170)^2 + (170)^2\right]}{(170)^2 + 4\left[1 + (170)\right]^2} + (130)$$

Where $\Sigma = \frac{(X_D)}{(X_m)} = \frac{(170)}{(170)}$

Where $X_m = \frac{X_{ad}}{(C_1)(C_m)}\left[\frac{2(F'_g) + (F_{g2}) + (F_{g3})}{(F_{NL})}\right]$

$$= \frac{(131)}{(71)(74)} \left[\frac{2(96) + (123) + (120)}{(127)} \right]$$

For Round Slots:

$$X_D = \frac{20(X)}{(n_b)} \left[.62 + \frac{(h_{bo})}{(b_{bo})} \right] + \frac{5(X_m)}{6(n_b)^2}$$

$$= \frac{20(129)}{(138)} \left[.62 + \frac{(135)}{(135)} \right] + \frac{5(170)}{6(138)^2}$$

For Rectangular Slots:

$$X_D = \frac{20(X)}{N_b} \left[\frac{(h_{bl})}{3(b_{bl})} + \frac{(h_{bo})}{(b_{bo})} \right] + \frac{5(X_m)}{6(N_b)^2}$$

$$= \frac{20(129)}{(138)} \left[\frac{(135)}{3(135)} + \frac{(135)}{(135)} \right] + \frac{5(170)}{6(138)^2}$$

Where $n = \frac{R_D}{X_m} = \frac{(170)}{(170)}$

Where R_D = Damper bar resistance

$$= \frac{100(X)(P)(\rho_{hot})}{(f)\ (\ell_s)} \left[\frac{\ell_b}{(n_b)(a_{cd})(P)} + \frac{.637(d_{ar})}{(a_{dr})(P)^2} \right]$$

$$= \frac{100(129)(6)(143)}{(5a)\ (17)} \left[\frac{(139)}{(138)(144)(6)} + \frac{.637(170)}{(170)(6)^2} \right]$$

Where d_{dr} = mean diameter of damper end ring. Must be given on input sheet.

Where a_{dr} = cross-sectional area of damper end ring. Must be given on input sheet.

(171) Z_2 NEGATIVE SEQUENCE IMPEDANCE - approximate calculation.

$$Z_2 = R_2 + j\,X_2 = \sqrt{R^2 + X^2}$$

$$Z_2 = (171) + j(170) = \sqrt{(171)^2 + (170)^2}$$

Where: $$R_2 = \frac{2(R_D)}{(n)^2 + 4\left[1 + (\varepsilon)\right]^2} + R_s \text{ (hot)}$$

$$= \frac{2(170)}{(170)^2 + 4\left[1 + (170)\right]} + (54)$$

(172) X_0 ZERO SEQUENCE REACTANCE - The reactance drop across any one phase (star connected) for unit current in each of the phases. The machine must be star connected for otherwise no zero sequence current can flow and the term then has no significance.

If (28) = 0 Then $X_o = 0$

If (28) $\neq$ 0 Then

$$X_o = X\left\{\frac{(K_{xo})}{(K_{x1})}\left[(\lambda_i) + (\lambda_{Bo})\right] + \frac{1.667\left[(h_1) + 2(h_3)\right]}{(m)(q)(K_P)^2(K_d)^2(b_s)} + .2(\lambda_E)\right\}$$

$$= (129)\left\{\frac{(173)}{(174)}\left[(62) + (175)\right] + \frac{1.667\left[(22) + 2(22)\right]}{(5)(25)(44)^2(43)^2(22)} + .2(64)\right\}$$

(173) K_{xo}

If (30) = 1 Then $K_{xo} = 1$

If (30) $\neq$ 1 Then $K_{xo} = \frac{3(\gamma)}{(m)(q)} - 2$

$$= \frac{3(31)}{(5)(25)} - 2$$

(174) K_{x1}

If (30) = 1 Then $K_{x1} = 1$

If (30) $\neq$ 1 Then:

$$K_{x1} = \left[\frac{3(\gamma)}{4(m)(q)} + \frac{1}{4}\right] = \left[\frac{3(31)}{4(5)(25)} + \frac{1}{4}\right] \quad \text{If } (31a) \geq .667$$

$$K_{x1} = \left[\frac{3(\gamma)}{4(m)(q)} - \frac{1}{4}\right] = \left[\frac{3(31)}{4(5)(25)} - \frac{1}{4}\right] \quad \text{If } (31a) < .667$$

(175) λ_{Bo}

If (138) = 0 Then:

$$\lambda_{Bo} = \frac{(K_{xo})}{(K_p)^2}\left[.07(\lambda_a)\right] = \frac{(173)}{(44)^2}\left[.07(175)\right]$$

$$\text{If } (92) \neq 0 \text{ Then } \lambda_{Bo} = \frac{\frac{(K_{xo})}{(K_{x1})}(\lambda_{Dq}) + \frac{(K_{xo})}{(K_p)^2}\left[.07(\lambda_a)\right]}{\left\{\frac{(K_{xo})}{(K_{x1})}(\lambda_{Dq})\right\}\left\{\frac{(K_{xo})}{(K_p)^2}\left[.07(\lambda_a)\right]\right\}}$$

$$= \frac{\frac{(173)}{(174)}(164) + \frac{(173)}{(44)^2}\left[.07(175)\right]}{\left\{\frac{(173)}{(174)}(164)\right\}\left\{\frac{(173)}{(44)^2}\left[.07(175)\right]\right\}}$$

If $K_{xo} = 0$, $\lambda_{bo} = 0$

(173) = 0, (175) = 0

Where: $\lambda_a = \frac{6.38(d)}{(P)(g_e)} = \frac{6.38(11)}{(6)(69)}$

(176) T'_{do} OPEN CIRCUIT TIME CONSTANT - The time constant of the field winding with the stator open circuited and with negligible external resistance and inductance in the field circuit. Field resistance at room temperature ($20^{o}C$) is used in this calculation.

$$T'_{do} = \frac{L_F}{2(R_F)} = \frac{(161)}{2(154)}$$

(177) T_a ARMATURE TIME CONSTANT - Time constant of the D.C. component. In this calculation stator resistance at room temperature ($20^{o}C$) is used.

$$T_a = \frac{X_2}{200\pi(f)(r_a)} = \frac{(170)}{200\pi(5a)(177)}$$

Where: $$r_a = \frac{(m)(I_{PH})^2(R_{SPH\ cold})}{\text{Rated KVA} \times 10^{3}} = \frac{(5)(8)^2(53)}{(2) \times 10^{3}}$$

(178) T'_d TRANSIENT TIME CONSTANT - The time constant of the transient reactance component of the alternating wave.

$$T'_d = \frac{(X'_d)}{(X_d)}(T'_{do}) = \frac{(167)}{(133)}(176)$$

(179) T''_d SUBTRANSIENT TIME CONSTANT - The time constant of the subtransient component of the alternating wave. This value has been determined empirically from tests on large machines. Use following values:

T''_d = .035 second at 60 cycle

T''_d = .005 second at 400 cycle

(180) F_{SC} SHORT CIRCUIT AMPERE TURNS - The field ampere turns required to circulate rated stator current when the stator is short circuited.

$$F_{SC} = \frac{(X_d)}{100}\left[2(F'_g) + (F_{g2}) + (F_{g3})\right]$$

$$= \frac{(133)}{100}\left[2(96) + (123) + (120)\right]$$

(181) SCR SHORT CIRCUIT RATIO - The ratio of the field current to produce rated voltage on open circuit to the field current required to produce rated current on short circuit.

Since the voltage regulation depends on the leakage reactance and the armature reaction, it is closely related to the current which the machine produces under short circuit conditions, and, therefore, is directly related to the SCR.

$$SCR = \frac{F_{NL}}{F_{SC}} = \frac{(127)}{(180)}$$

(182) I^2R_R FIELD COIL I^2R - at no load. The copper loss in the field winding is calculated with cold field resistance at 20°C for no load condition. (Loss for 2 coils.)

Rotor $I^2R = 2(I_{FNL})^2\ (R_{f\ cold}) = 2(127a)^2\ (154)$

(183) F&W

FRICTION & WINDAGE LOSS - There is no known calculation method that will give accurate results for this loss. The best results are obtained by using existing data. For ratioing purposes, the loss can be assumed to vary approximately as the 5/2 power of the rotor diameter and as the 3/2 power of the RPM. When no existing data is available, the following calculation can be used for an approximate answer. Insert 0. when computer is to calculate F&W. Insert actual F&W when available. Use same value for all load conditions.

$$F\&W = 2.52 \times 10^{-6} (d_r)^{2.5} (\ell_{NP} + \ell_1 + \ell_{g2}) (RPM)^{1.5}$$

$$= 2.52 \times 10^{-6} (11a)^{2.5} \left[(76)+(80a)+(78)\right] (7)^{1.5}$$

(184) W_{TNL}

STATOR TEETH LOSS - at no load. The no load loss (W_{TNL}) consists of eddy current and hysteresis losses in the iron. For a given frequency the no load tooth loss will vary as the square of the flux density.

$$W_{TNL} = .453(b_t\ 1/3)(Q)(\ell_s)(h_s)(K_Q)$$

$$= .453(57a)(23)(17)(22)(184)$$

Where $K_Q = (k)\left[\frac{(B'_t)}{(B)}\right]^2 = (19)\left[\frac{(91)}{(20)}\right]^2$

(185) W_c STATOR CORE LOSS - The stator core losses are due to eddy currents and hysteresis and do not change under load conditions. For a given frequency the core loss will vary as the square of the flux density (B_c).

$$W_c = 1.42 \left[(D) - (h_c)\right] (h_c)(\ell_s)(K_Q)$$

$$= 1.42 \left[(12) - (24)\right](24)(17)(185)$$

$$\text{Where } K_Q = (k)\left[\frac{(B_c')}{(B)}\right]^2 = (19)\left[\frac{(94)}{(20)}\right]^2$$

(186) W_{NPL} POLE FACE LOSS - at no load. The pole surface losses are due to slot ripple caused by the stator slots. They depend upon the width of the stator slot opening, the air gap, and the stator slot ripple frequency. The no load pole face loss (W_{PNL}) can be obtained from Graph 2. Graph 2 is plotted on the bases of open slots. In order to apply this curve to partially open slots, substitute b_o for b_s. For a better understanding of Graph 2, use the following sample.

K_1 as given on Graph 2 is derived empirically and depends on lamination material and thickness. Those values given on Graph 2 have been used with success. K_1 is an input and must be specified. See Item (187) for values of K_1.

K_2 is shown as being plotted as a function of $(B_G)^{2.5}$. Also note that upper scale is to be used. Another note in the lower right hand corner of graph indicates that for a solid line (_____), the factor is read from the left scale, and for a broken or dashed line (____ _ ____ _), the right scale should be read. For example, find K_2 when B_G = 30 kilolines. First locate 30 on upper scale. Read down to the intersection of solid line plot of $K_2 = f(B_G)^{2.5}$. At this intersection read the left scale for K_2. K_2 = .28. Also refer to Item (188) for K_2 calculations.

K_3 is shown as a solid line plot as a function of $(F_{SLT})^{1.65}$. The note on this plot indicates that the upper scale X 10 should be used. Note F_{SLT} = slot frequency. For an example, find K_3 when F_{SLT} = 1000. Use upper scale X 10 to locate 1000. Read down to intersection of solid line plot of $K_3 = f(F_{SLT})^{1.65}$. At this intersection read the left scale for K_3. K_3 = 1.35. Also refer to Item (189) for K_3 calculations.

For K_4 use same procedure as outlined above except use lower scale. Do not confuse the dashed line in this plot with the note to use the right scale. The note does not apply in this case. Read left scale. Also refer to Item (190) for K_4 calculations.

For K_5 use bottom scale and substitute b_o for b_s when using partially closed slot. Read left scale when using solid plot. Use right scale when using dashed plot. Also refer to Item (191) for K_5 calculations.

For K_6 use the scale attached for C_1 and read K_6 from left scale. Also refer to Item (192) for K_6 calculations.

The above factors (K_2), (K_3), (K_4), (K_5), (K_6) can also be calculated as shown in (188), (189), (190), (191), (192), respectively.

$$W_{PNL} = \pi(d)(\ell)(K_1)(K_2)(K_3)(K_4)(K_5)(K_6)$$

$$= \pi(11)(13)(187)(188)(189)(190)(191)(192)$$

(187) K_1

K_1 is derived empirically and depends on lamination material and thickness. The values used successfully for K_1 are shown on Graph 2. They are:

K_1 = 1.17 for .028 lam thickness, low carbon steel
= 1.75 for .063 lam thickness, low carbon steel
= 3.5 for .125 lam thickness, low carbon steel
= 7.0 for solid core

K_1 is an input and must be specified on input sheet.

(188) K_2

K_2 can be obtained from Graph 2 (see Item 186 for explanation of Graph 2) or it can be calculated as follows:

$$K_2 = f(B_G) = 6.1 \times 10^{-5} (B_G)^{2.5}$$

$$= 6.1 \times 10^{-5} (95)^{2.5}$$

(189) K_3

K_3 can be obtained from Graph 2 (see item 186 for explanation of Graph 2) or it can be calculated as follows:

$$K_3 = f(F_{SLT}) = 1.5147 \times 10^{-5} (F_{SLT})^{1.65}$$

$$= 1.5147 \times 10^{-5} (189)^{1.65}$$

Where $F_{SLT} = \frac{(RPM)}{60} (Q)$

$$= \frac{(7)}{60} (23)$$

(190) K_4

K_4 can be obtained from Graph 2 (see Item 186 for explanation of Graph 2) or it can be calculated as follows:

For $\tau_s \leqq .9$

$$K_4 = f(\tau_s) = .81(\tau_s)^{1.285}$$

$$= .81(26)^{1.285}$$

For $.9 \leqq \tau_s \leqq 2.0$

$$K_4 = f(\tau_s) = .79(\tau_s)^{1.145}$$

$$= .79(26)^{1.145}$$

For $\tau_s > 2.0$

$$K_4 = f(\tau_s) = .92(\tau_s)^{.79}$$

$$= .92(26)^{.79}$$

(191) K_5

K_5 can be obtained from Graph 2 (see Item 186 for explanation of Graph 2) or it can be calculated as follows:

For $(b_s) / (g) \leqq 1.7$

$$K_5 = f(b_s/g) = .3 \left[(b_s) / (g)\right]^{2.31}$$

$$= .3 \left[(22) / (59)\right]^{2.31}$$

NOTE: For partially open slots substitute b_o for b_s in equations shown.

For $1.7 < (b_s) / (g) \leqq 3$

$$K_5 = f(b_s) / (g) = .35 \left[(b_s) / (g)\right]^{2}$$

$$= .35 \left[(22) / (59)\right]^{2}$$

For $3 < (b_s) / (g) \leqq 5$

$$K_5 = f(b_s) / (g) = .625 \left[(b_s) / (g)\right]^{1.4}$$

$$= .625 \left[(22) / (59)\right]^{1.4}$$

For $(b_s) / (g) > 5$

$$K_5 = f(b_s) / (g) = 1.38 \left[(b_s) / (g)\right]^{.965}$$

$$= 1.38 \left[(22) / (59)\right]^{.965}$$

(192) K_6

K_6 can be obtained from Graph 2 (see Item 186 for explanation of Graph 2) or it can be calculated as follows:

$$K_6 = f(C_1) = 10\left[.9323(C_1) - 1.60596\right]$$

$$= 10\left[.9323(71) - 1.60596\right]$$

(193) W_{DNL}

<u>DAMPER LOSS</u> - at no load at 20°C. This loss is produced by slot ripple in the damper winding. At no load this loss is calculated from curves 7 and 8.

$$W_{DNL} = \frac{1.246(P)(n_b)(\ell_b)(\rho_D)}{(a_{cd}) \times 10^3}\left[(\tau_s)(B'_g)(K_{P1})(K_g)\right]^2$$

$$\left\{(K_{f1})\left[\frac{K_{W1}}{2(\tau_s) + \left[(\tau_g)/(K\phi_i)\right]}\right]^2 + (K_{f2})\left[\frac{(K_{W2})}{2(\tau_s) + \left[(\tau_g)/(K\phi_2)\right]}\right]^2\right\}$$

$$W_{DNL} = \frac{1.246(6)(138)(139)(141)}{(144) \times 10^3}\left[(26)(95)(193)(193)\right]^2$$

$$\left\{(193)\left[\frac{(193)}{2(193) + \left[(193)/(193)\right]}\right]^2 + (193)\left[\frac{(193)}{2(193) + \left[(193)/(193)\right]}\right]^2\right\}$$

Where $K_{P1} = 1 - \dfrac{1}{\sqrt{1 + \left[(b_s)/2(g)\right]^2}}$

$$= 1 - \frac{1}{\sqrt{1 + \left[(22)/2(59)\right]^2}}$$

NOTE: Substitute b_o for b_s when partially opened stator slot is used.

K_{P1} can also be obtained from curve 7 where abscissa is $(b_s) / (g)$ or $(b_o) / (g) = (22) / (59)$

Where $K_g = (K_s) = (67)$

Where $g' = (K_g)(g) = (193)(59)$

Where K_{f1} & K_{f2} are obtained from curve 7

Where the abscissa is S_1 or S_2

$$S_1 = .32 \sqrt{\frac{(f_{S1})}{(\rho_D)}} (h_b) = .32 \sqrt{\frac{(193)}{(141)}} (136)$$

$$S_2 = .32 \sqrt{\frac{(f_{S2})}{(\rho_D)}} (h_b) = .32 \sqrt{\frac{(193)}{(141)}} (136)$$

Where $f_{S1} = 2qmf = 2(25)(5)(5a)$

$f_{S2} = 2(f_{S1})$

Where K_{W1} and K_{W2} are obtained from curve 8. where the abscissa is $(b_s) / (\tau_s)$ for open slots or $(b_o) / (\tau_s)$ for semi-enclosed slots $(b_s) / (\tau_s) = (22) / (26)$

Where τ_t is obtained from curve 8

Where the abscissa is $(b_{bo}) / (g') = \frac{(89)}{(193)}$

When 91 = 0 or when (90) = (91)

$\tau_C = \frac{.75}{(K_{f1})} = \frac{.75}{(193)}$ For round or square slots

When 91 $\neq$ 0 and when (90) $\neq$ (91)

$$\tau_C = \frac{(h_{bl})}{3(b_{bl})(K_{fl})} = \frac{(91)}{3(89)(193)}$$

Where $\tau_S = \frac{(h_{bo})}{(b_{bo})} + (\tau_t) + (\tau_C)$

$$= \frac{(135)}{(135)} + (193) + (193)$$

Where $\tau_g = \frac{\tau_b}{g} = \frac{(140)}{(193)}$

Where $K_{\phi 1}$ and $K_{\phi 2}$ are obtained from curve 8

Where the abscissa is $(\tau_b) / (\tau_s) = (140) / (26)$

(194) I^2F STATOR I^2R - at no load. This item = 0. Refer to Item (245) for 100% load stator I^2R.

(195) -- EDDY LOSS - at no load. This item = 0. Refer to Item (246) for 100% load eddy loss.

(196) -- TOTAL LOSSES - at no load. Sum of all losses.

Total losses = (FIELD I^2R) + (F&W) + (Stator Teeth Loss) + (Stator Core Loss) + (Pole Face Loss) + (Damper Loss)

= (182) + (183) + (184) + (185) + (186) + (193)

NOTE: The output sheet shows the next items to be: (Rating), (Rating + Losses), (% Losses), (% Efficiency). These items do not apply to the no load calculation since the rating is zero. Refer to Items (248), (249), (250), (251) for these calculations under load.

(197) E_{NL} LOAD CALCULATIONS - Run through sample at 100% load.

$$E_{NL} = (E_{PH}) + (I_{PH})(R_{PH})$$

$$= (4) + (8)(54)$$

(198) e_d The voltage that would be generated at no load and no saturation -- the air gap voltage behind the synchronous reactance.

$$e_d = \cos(\varepsilon) + \frac{(X_d)}{100} \sin(\psi)$$

$$= \cos(198) + \frac{(133)}{100} \sin(198)$$

Where $\psi = \tan^{-} \left[\dfrac{\sin(\Theta) + \frac{X_q}{100}}{\cos \Theta} \right]$

$$= \tan^{-1} \left[\frac{\sin(198) + \frac{134}{100}}{\cos(198a)} \right]$$

(198a) Θ POWER FACTOR ANGLE

$$= \cos^{-1} \left[(PF) \right]$$

$$= \cos^{-1} \left[(9) \right]$$

Where $\varepsilon = (\psi) - (\Theta) = (198) - (198)$

(199) F_{gL1} AIR GAP AMPERE TURNS UNDER LOAD - If there were no change in stator leakage flux from stator core to rotor skirt from the no load condition calculated in Item (96).

$$F_{gL1} = (e_d)(F'_g) = (198)(96)$$

(200) F_{TL1} STATOR TEETH AMPERE TURN DROP AT FULL LOAD

First approximation.

$$F_{TL1} = (F'_T)\left[1 + (P.F.)\right]$$

$$= (97)\left[1 + (9)\right]$$

(201) F_{CL} STATOR CORE AMPERE TURN DROP - Because the stator core to rotor leakage flux does not increase appreciably, the core density does not change noticeably. The stator tooth to tooth leakage flux approximately offsets the theoretical increase in core flux under load. Therefore:

$$F_{CL} = F'_C$$

$$= (98)$$

(202) ϕ_{7L1} LEAKAGE FLUX FROM STATOR BACK-IRON TO ROTOR SKIRT - First approximation - in kilolines.

$$\phi_{7L1} = (P_7)\left[(F_{gL1}) + (F_{TL1}) + (F_{CL})\right] \times 10^{-3}$$

$$= (86)\left[(199) = (200) + (201)\right] \times 10^{-3}$$

(203) F'_{gL} TOTAL AIR GAP AMPERE TURNS AT FULL LOAD

$$F'_{gL} = F_{gL1} + \frac{(\phi_{7L1})(g_e) \times 10^3}{(A_g)\ 3.19} = (199) + \frac{(202)(69) \times 10^3}{(68)\ 3.19}$$

(204) ϕ_{TL1} THEORETICAL FLUX AT FULL LOAD - first approximation.

$$\phi_{TL1} = (\phi_{NL}) + \frac{(\phi_{7L1})}{(C_p)}$$

$$= (204) + \frac{(202)}{(73)}$$

Where $\phi_{NL} = (\phi_T) \left[\frac{(E_{NL})}{(E_{PH})}\right]$

$$= (88) \left(\frac{(197)}{(4)}\right)$$

(205) B_{TL} STATOR TOOTH DENSITY AT FULL LOAD ABOVE NORTH POLE

$$B_{TL} = \frac{(\phi_{TL1})}{(Q)(\ell_s)(b_{t\ 1/3})} = \frac{(204)}{(23)(17)(57a)}$$

(206) F_{TL} STATOR TOOTH AMPERE TURNS AT FULL LOAD

$$F_{TL} = (h_s) \left[\text{NI/inch at density } (B_{TL})\right] \left[1 + (P.F.)\right]$$

$$= (22) \left[\begin{array}{l}\text{Look up on stator magnetization curve} \\ \text{given in (18) at density (205)}\end{array}\right] \left[1 + (9)\right]$$

(207) ϕ_{7L} LEAKAGE FLUX FROM STATOR BACK-IRON TO ROTOR SKIRT - second application.

$$\phi_{7L} = (P_7)\left[(F'_{gL1}) + (F_{TL}) + (F_{CL})\right] \times 10^{-3}$$

$$= (86)\left[(203) + (206) + (201)\right] \times 10^{-3}$$

(208) ϕ_{TL} THEORETICAL FLUX AT F.L. - second approximation.

$$\phi_{TL} = (\phi_{NL}) + \frac{(\phi_{7L})}{(C_p)}$$

$$= (204) + \frac{(207)}{(73)}$$

(208a) F_{gL}

$$F_{gL} = F'_{gL1} + \frac{(\phi_{7L})(g_e)\ 10^3}{3.19\ (A_g)}$$

$$= (203) + \frac{(207)(69)\ 10^3}{3.19\ (68)}$$

The next four items cover the flux leakages from pole to pole in the rotor. (In kilolines)

(209) ϕ_{1L}

$$\phi_{1L} = (P_1)\left[2(F_{gL}) + 2(F_{TL}) + 2(F_{CL})\right] \times 10^{-3}$$

$$= (80)\left[2(208a) + 2(206) + 2(201)\right] \times 10^{-3}$$

(210) ϕ_{2L}

$$\phi_{2L} = (P_2)\left[2(F_{gL}) + 2(F_{TL}) + 2(F_{CL})\right] \times 10^{-3}$$

$$= (81)\left[2(208a) + 2(206) + 2(201)\right] \times 10^{-3}$$

(211) ϕ_{3L}

$$\phi_{3L} = (P_3)\left[2(F_{gL}) + 2(F_{TL}) + 2(F_{CL})\right] \times 10^{-3}$$

$$= (80)\left[2(208a) + 2(206) + 2(201)\right] \times 10^{-3}$$

(212) ϕ_{4L}

$$\phi_{4L} = (P_4)\left[2(F_{gL}) + 2(F_{TL}) + 2(F_{CL})\right] \times 10^{-3}$$

$$= (83)\left[2(208a) + 2(206) + 2(201)\right] \times 10^{-3}$$

(213) ϕ_{PL} <u>FLUX PER POLE AT FULL LOAD</u>

For P.F. = 0.0 to .95

$$\phi_{PL} = \phi_{PNL}\left[(e_d) - \frac{.93(X_{ad})}{100}\sin(\psi)\right]$$

$$= (213)\left[(198) - \frac{.93(131)}{100}\sin(198)\right]$$

Where $\phi_{PNL} = \dfrac{(\phi_{TL})(C_P)}{(P)}$

$$= \frac{(208)(73)}{(6)}$$

For P.F. .95 to 1.0

$$\phi_{PL} = (K_c)(\phi_{PNL})$$

$$= (9a)(213)$$

(214) ϕ_{SPFL} <u>SOUTH POLE FLUX AT FULL LOAD</u>

$$\phi_{SPFL} = \frac{(\phi_{PL})}{2} + \frac{(\phi_{1L}) + (\phi_{2L}) + (\phi_{3L}) + (\phi_{4L})}{2(P)}$$

$$= \frac{(213)}{2} + \frac{(209) + (210) + (211) + (212)}{2(6)}$$

(215) B_{SPFL} <u>FLUX DENSITY IN SOUTH POLE AT FULL LOAD</u>

$$B_{SPFL} = \frac{(\phi_{SPFL})}{(a_{SP})} = \frac{(214)}{(79a)}$$

(216) F_{SPFL} SOUTH POLE AMPERE TURNS

When $b_{np}(end) = b_{np}(mid)$

$$F_{SP-FL} = \frac{(\ell_{SP})}{3} \left[\text{NI/inch at density } (B_{SPFL}) \right]$$

$$\frac{(76)}{3} \left[\text{Look up on tube magnetization curve given in (18) at density (215)} \right]$$

When $b_{np}(end) \neq b_{np}(mid)$

$$\frac{\ell_{SP}}{2} \left[\text{NI/inch at density } B_{SPFL} \right]$$

$$\frac{(76)}{2} \left[\text{Look up on tube magnetization curve given in (18) at density (215)} \right]$$

(217) ϕ_{NPFL} NORTH POLE FLUX - First approximation without leakage ϕ_{5L}.

$$\phi_{NPFL} = (\phi_{PL}) + \frac{(\phi_{1L}) + (\phi_{2L}) + (\phi_{3L}) + (\phi_{4L})}{(P)}$$

$$(213) + \frac{(209) + (210) + (211) + (212)}{(6)}$$

(218) B'_{NPFL} NORTH POLE DENSITY AT FULL LOAD - first approximation.

$$B'_{NPFL} = \frac{(\phi_{NPFL})}{(a_{NP})} = \frac{(217)}{(79)}$$

(219) F'_{NPFL} NORTH POLE AMPERE TURN DROP - first approximation.

$$F'_{NPFL} = (h_{NP}) \left[\text{NI/inch at density } (B'_{NPFL}) \right]$$

$$(78) \left[\text{Look up on N/P magnetization curve given in (18) at density (218)} \right]$$

(220) ϕ_{6L} LEAKAGE ACROSS FIELD COIL - from rotor shaft outer diameter to the inner surface of the rotor skirt.

$$\phi_{6L} = (P_6)\left[(F_{SPFL})+(F'_{NPFL})+2(F_{gL})+2(F_{TL})+2(F_{CL})\right] \times 10^{-3}$$

$$= (85)\left[(216)+(219)+2(208_a)+2(206)+2(201)\right] \times 10^{-3}$$

(221) ϕ_{SKFL} FLUX AT THE SKIRT ENTRY EDGE OF AUXILIARY AIR GAP (g_2) - at full load.

$$\phi_{SKFL} = (\phi_{SPFL})\frac{(P)}{2} + \frac{(\phi_{6L})}{2}$$

$$= (214)\frac{(6)}{2} + \frac{(220)}{2}$$

(222) B_{SKFL} DENSITY AT THE SKIRT ENTRY EDGE OF AUXILIARY AIR GAP (g_2) - at full load.

$$B_{SKFL} = \frac{\phi_{SKFL}}{a_{SK}} = \frac{(221)}{(79b)}$$

(223) F_{SKFL} ROTOR SKIRT AMPERE TURN DROP -

$$F_{SKFL} = (\ell_{SK})\left[\text{NI/inch at density } B_{SKFL}\right]$$

$$= (78)\left[\text{Look up on skirt magnetization curve given in (18) at density (222)}\right]$$

This value of ampere turns should be insignificant. The calculation of F_{SKFL} is in this program only for a check on a possible bottleneck.

(224) B_{g2FL} FLUX DENSITY IN AUXILIARY AIR GAP - at full load.

$$B_{g2FL} = \frac{(\emptyset_{SKFL})}{(A_{g2})} = \frac{(221)}{(70)}$$

(225) F_{g2FL} AMPERE TURN DROP IN AUXILIARY GAP

$$F_{g2FL} = \frac{(B_{g2FL})}{3.19} (g_2) \times 10^3$$

$$= \frac{(224)}{3.19} (59a) \times 10^3$$

(226) $\emptyset_{L5}$ LEAKAGE FLUX THROUGH FIELD COIL FROM NORTH POLE TO YOKE (y_2)

$$\emptyset_{L5} = (P_5)\left[(F'_{NPFL})+2(F_{gL})+2(F_{TL})+2(F_c)+(F_{SPFL})+(F_{g2FL})\right] \times 10^{-3}$$

$$= (84)\left[(219)+2(208a)+2(206)+2(201)+(216)+(225)\right] \times 10^{-3}$$

(227) $\emptyset_{y2FL}$ FLUX IN COIL YOKE - At y_2 the smallest cross-section of yoke.

$$\emptyset_{y2FL} = (\emptyset_{SKFL}) + \frac{(\emptyset_{L5})}{2}$$

$$= (221) + \frac{(226)}{2}$$

(228) B_{y2FL} FLUX DENSITY IN COIL YOKE - At y_2 the smallest cross-section of yoke.

$$B_{y2FL} = \frac{(\emptyset_{y2FL})}{(A_{y2})} = \frac{(227)}{(124)}$$

(229) F_{y2FL} AMPERE TURN DROP IN THE YOKE SECTION y_2. This value should be insignificant and the calculation is here to call attention to a possible saturation point. If the yoke section is made straight, of uniform thickness, all of the ampere turn drop will be in the lower half of the yoke.

$$F_{y2FL} = \frac{1}{3}(h_y)\left[\text{NI/inch at density } (B_{y2FL})\right]$$

$$= \frac{1}{3}(78)\left[\text{NI/inch at density } (228)\right]$$

(230) B_{g3FL} DENSITY OF AIR GAP g_3 - at full load.

$$B_{g3FL} = \frac{(\phi_{y2FL})}{(A_{g3})} = \frac{(227)}{(70a)}$$

(231) F_{g3FL} AMPERE TURN DROP ACROSS AIR GAP (g_3) - at full load.

For stepped air gap i.e. when (59b) = 1.0 calculate as follows:

$$F_{g3FL} = \frac{B_{g3FL}\ (g_{3e})}{3.19} \times 10^3$$

$$= \frac{(230)(59f)}{3.19} \times 10^3$$

For tapered air gap i.e. when (59b) = 2 calculate as follows:

$$F_{g3FL} = \frac{B_{g3FL}\ (g_3)}{3.19} \times 10^3 = \frac{(230)(59c)}{3.19} \times 10^3$$

(232) B_{y4FL} FLUX DENSITY IN SHAFT AT ENTRY TO NORTH POLE

$$B_{y4FL} = \frac{(\phi_{y2FL})}{(A_{y4})} = \frac{(227)}{(112)}$$

(233) F_{y4FL} AMPERE TURN DROP IN SHAFT

$$F_{y4FL} = \frac{(\ell_{y4})}{2} \left[\text{NI/inch at density } (B_{y4FL})\right]$$

$$= \frac{(78)}{2} \left[\text{Look up on shaft magnetization curve given in (18) at density (232)}\right]$$

(234) B_{NPFL} FLUX DENSITY IN NORTH POLE AT BASE

$$B_{NPFL} = \frac{2(\phi_{y2FL})}{4(a_{NP})} = \frac{2(227)}{4(79)}$$

(235) F_{NPFL} NORTH POLE AMPERE TURN DROP

$$F_{NPFL} = (h_{NP}) \left[\text{NI/inch at density } (B_{NPFL})\right]$$

$$= (78) \left[\text{Look up on north pole magnetization curve given in (18) at density (234)}\right]$$

(236) F_{FL} FULL LOAD AMPERE TURNS

$$F_{FL} = 2(F_g)+2(F_T)+2(F_c)+(F_{SP})+(F_{NP})+(F_{SK})+(F_{g2})+(F_{y2})+(F_{g3FL})+(F_{y4})$$

$$2(208)+2(206)+2(201)+(216)+(235)+(223)+(225)+(229)+(231)+(233)$$

(237) I_{FFL} FIELD CURRENT - at 100% load per coil

$$I_{FFL} = \frac{(F_{FL})}{(N_F)} = \frac{(236)}{(146)}$$

(238) E_{FFL} FIELD VOLTS - at 100% load per coil. This calculation is made with hot field resistance at the expected temperature at 100% load.

$$E_{FFL} = (I_{FFL})(R_{F\ hot})$$

$$= (237)(155)$$

(239) -- CURRENT DENSITY OF FIELD CONDUCTOR - at 100% load.

$$\text{Current Density} = \frac{(I_{FFL})}{(a_{cf})} = \frac{(237)}{(153)}$$

(240) -- Items (197) through (239) cover full load saturation calculations at 100% load. In order to calculate for any load other than 100% load, use the following procedure:

Recalculate Item (197) as follows:

$$E_{NL} = E_{PH} + I_{PH}\ (\text{Per Unit Load})\ R_{PH}$$

$$= (4) + (8)\ (\text{Per Unit Load})\ (54)$$

Recalculate Item (198) as follows:

$$= \tan^{-1}\left[\frac{\sin\Theta + (X_q)(\text{Per Unit Load})}{\cos\Theta}\right]$$

$$= \tan^{-1}\left[\frac{\sin(161) + (134)(\text{Per Unit Load})}{\cos(198)}\right]$$

$$e_d = \cos(\varepsilon) + (X_d)(\text{Per Unit Load})\ \sin(\psi)$$

$$= \cos(\varepsilon) + (133)(\text{Per Unit Load})\ \sin(240)$$

Recalculate Item (213)

For P.F. = 0.0 to .95

$$\phi_{PL} = \phi_{PNL}\left[(e_d) - \frac{.93\,(X_{dd})(P.U.\,LOAD)}{100}\sin(\phi)\right]$$

$$= (213)\left[(240) - \frac{.93(131)(P.U.\,LOAD)}{100}\sin(240)\right]$$

With the changes made as shown in Item (240), recalculate Items (197) through (239) at the % load required using per unit load = $\frac{\%\text{ load being used}}{100}$.

(241) I^2R_R <u>FIELD COIL I^2R</u> at 100% load - The copper loss in the field windings calculated with hot field resistance at expected temperature for 100% load condition. (for two coils).

Rotor $I^2R = 2(I_{FFL})^2(R_{F\ hot}) = 2(237)^2$ (155)

(242) W_{TFL} <u>STATOR TEETH LOSS</u> at 100% load - The stator tooth loss under load increases over that of no load because of the parasitic fluxes caused by the ripple due to the rotor damper bar slot openings.

$$W_{TFL} = \left\{2\left[.4(X_d)\right]^{(ex)} + 1\right\} W_{TNL}$$

$$= \left\{2\left[.4(133)\right]^{(207)} + 1\right\} (184)$$

Where $(e_x) = 1.8$ if $\left[\frac{.4(X_d)}{100}\right] < 1.0$

$(e_x) = 2.0$ if $\left[\frac{.4(133)}{100}\right] > 1.0$

(243) W_{PFL} POLE FACE LOSS at 100% load

$$W_{PFL} = \left\{ \left[\frac{(K_{sc})(I_{PH}) \frac{(\%\ Load)}{100} (n_s)}{(C)\ (F_{gL})} \right]^2 + 1 \right\} (W_{PNL}) + (W_{PHR})$$

$$= \left\{ \left[\frac{(243)\ (8)\ 1\ (30)}{(32)\ (208a)} \right]^2 + 1 \right\} (186) + (243)$$

(K_{sc}) is obtained from Graph 3

Where W_{PHR} = pole face harmonic loss

The pole face harmonic loss calculation is not included in this design manual; however, a space has been provided on the input sheet for the pole face harmonic loss if the designer calculates it by some other means. This calculated loss will be added to the normal pole face harmonic loss and the output will include both. When the calculated value of pole face harmonic loss is not available insert 0.0 on the input sheet. When the calculated value of pole face harmonic loss is available, insert the actual value on the input sheet in watts.

(244)	W_{DFL}	DAMPER LOSS at 100% load

$$W_{DFL} = \left\{ \left[\frac{(K_{sc})(I_{PH}) \frac{(\%\ \text{Load})}{100} (n_s)}{(C)(F_{gL})} \right]^2 + 1 \right\} (W_{DNL}) \times \frac{(\rho_{D\ hot})}{(\rho_{D\ cold})} + (W_{DHR})$$

$$= \left\{ \left[\frac{(244)\ (8)\ 1\ (30)}{(32)(166)} \right]^2 + 1 \right\} (193)\ \frac{(143)}{(141)} + (244)$$

(K_{sc}) is obtained from Graph 3

Where W_{DHR} = Damper bar harmonic loss

The damper bar harmonic loss calculation is not included in this design manual; however, a space has been provided on the input sheet for the damper bar harmonic loss if the designer calculates it by some other means. This calculated loss will be added to the normal DAMPER harmonic loss and the output will include both. When the calculated value of the damper bar harmonic loss is not available, insert 0.0 on the input sheet. When the calculated value of DAMPER harmonic loss is available, insert the actual value on the input sheet in watts.

(245) I^2R

STATOR I^2R at 100% load - The copper loss based on the D.C. resistance of the winding. Calculate at the maximum expected operating temperature.

$$I^2R = (m)(I_{PH})^2 \ (R_{SPH} \text{ hot}) \ \frac{(\% \text{ Load})}{100}$$

$$= (5)(8)^2 \ (54) \ \frac{(\% \text{ Load})}{100}$$

(246) --

EDDY LOSS - Stator I^2R loss due to skin effect

$$\text{Eddy Loss} = \left[\frac{(\text{EF top}) + (\text{EF bot})}{2} - 1\right] (\text{Stator } I^2R)$$

$$= \left[\frac{(55) + (56)}{2} - 1\right] (245)$$

(247) --

TOTAL LOSSES at 100% load - sum of all losses at 100% load.

Total Losses = (FIELD I^2R) + (F&W) + (Stator Teeth Loss)
+ (Stator Core Loss) + (Pole Face Loss)
+ (Damper Loss) + (Stator I^2R) + (Eddy Loss)
= (241)+(183)+(242)+(185)+(243)+(244)+(245)+(246)

(248) --

RATING IN KILOWATTS at 100% load

$$\text{Rating} = 3(E_{PH})(I_{PH}) \qquad (\text{P.F.}) \ \frac{(\% \text{ Load})}{100} \times 10^{-3}$$

$$= 3(4)(8) \qquad (9)(1.) \times 10^{-3}$$

(249) --

RATING & Σ LOSSES = (248) + (247)$\times 10^{-3}$

(250) --

% LOSSES = $\left[\Sigma \text{Losses}/(\text{Rating} + \Sigma \text{Losses})\right] 100$

$$= \left[(247)10^{-3}/(249)\right] 100$$

(251) --

% EFFICIENCY = 100% - % Losses

= 100% - (250)

COMPUTER PROCEDURE FOR
BECKY ROBINSON DESIGN CALCULATIONS

1. Clear core (no switch control).
2. Insert output form #1 into typewriter, and set margin for correct output.
3. Load pass #1 followed by input #1 (output both printed and punched cards).
4. Reset and load pass #2 followed by output from pass #1 (output punched cards).
5. Reset and load pass #3 followed by output from pass #2 (output punched cards).
6. Reset and load pass #4 followed by input #2 and output from pass #3 (output punched cards).
7. Reset and load pass #5 followed by output from pass 4 (output punched cards).
8. Reset and load pass #6 followed by saturation curve values and output #5 (output punched cards).
9. Reset and load pass #7 followed by output from pass 6 (output printed plus punched cards).
10. Reset and load pass #8 followed by output from pass 7 (output punched cards).
11. Reset and load pass #9 followed by output from pass 8 (output printed plus punched cards).
12. Reset and load pass #10 followed by output from pass 9 (output punched cards).

13. Reset and load pass #11 followed by saturation curve values and output from pass 10 (output punched cards).

14. Reset and load pass #12 followed by output pass #11 (output printed and punched cards).

15. If there is punch card output from pass #12 no load saturation curve is required. Place output form #2 in typewriter and load pass #13 followed by saturation curve values and output from pass 12 (output printed).

All Input Parameters are in Format F7.0 (Fig. 1)

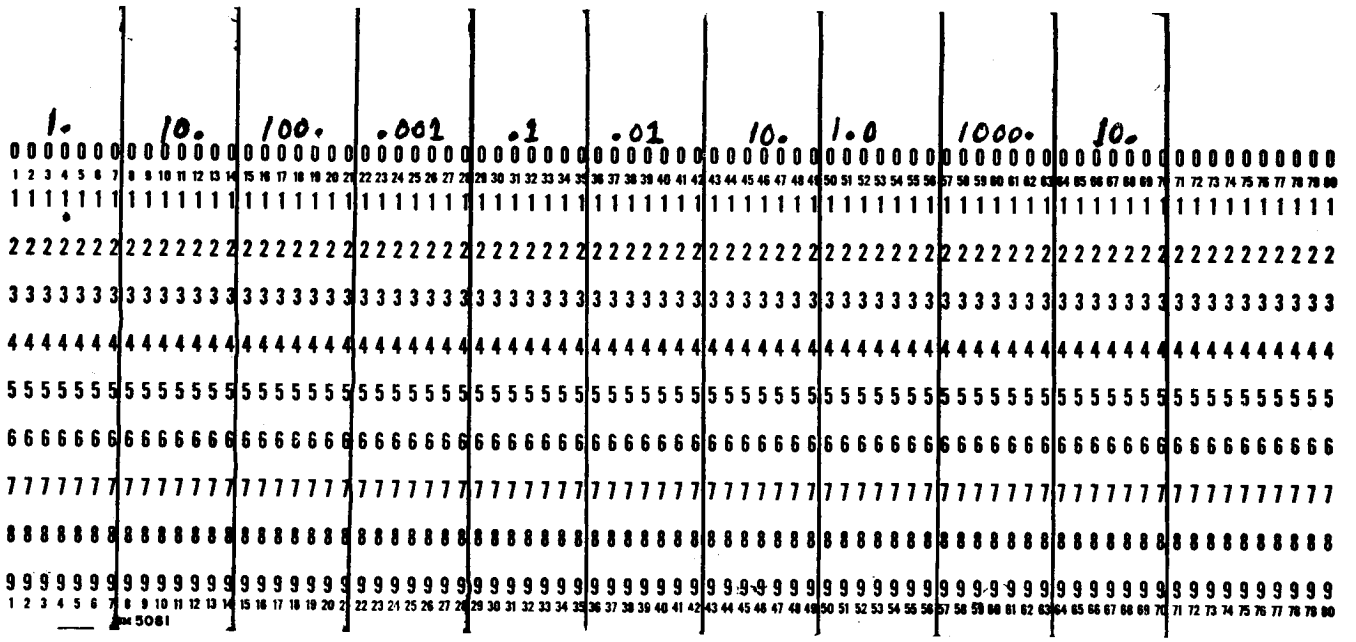

FIG. 1

All Saturation Curve Values are in Format F10.0 (Fig. 2)

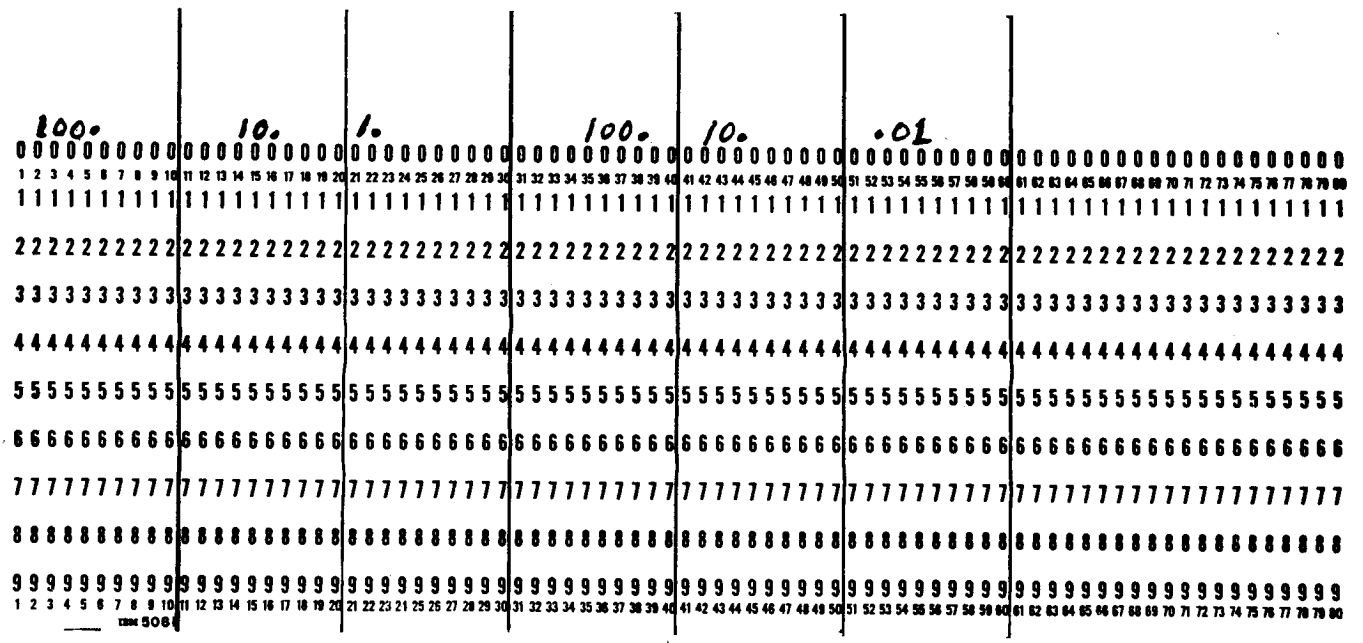

FIG. 2

PASS 1

```
    1 FORMAT(E11.5,E11.5,E11.5,E11.5,E11.5,E11.5)
    2 FORMAT(F7.0,F7.0,F7.0,F7.0,F7.0,F7.0,F7.0,F7.0,F7.0,F7.0)
    3 FORMAT(9X F12.5,2X F12.5)
    7 READ2,VA,EE,EP,PN,F,PX,RPM,PI,PF,CK
      READ2,POL,DI,DU,CL,HV,BV,SF,WL,BK,ZZ
      READ2,BO,B1,B2,B3,BS,HO,HX,HY,HZ,HS
      READ2,HT,HW,QQ,W,RF,SC,YY,C,DW,SN
      READ2,SN1,DW1,DB,CE,SH,SD,PBA,SK,T1,RS
      READ2,G,GC,GP,G4,C1,CW,CP,EL,CM,CQ
      READ2,PE,BNE,BSE,BNM,BSM,PNL,PSL,DR,HNP,D1
      READ2,WO,HD,DD,H,B,BN,SB,TB,RE,T3
      READ2,DDR,AD,PT,FE,RD,RT,T2,RR,SNL,WF
      SS=SF*(CL-HV*BV)                                    EQ (17)
      HC=(DU-DI-2.0*HS)*0.5                               EQ (24)
      QN=QQ/(PX*PN)                                       EQ (25)
      TS=3.142*DI/QQ                                      EQ (26)
      IF(ZZ-4.0)9,10,9
    9 TT=(0.667*HS+DI)*3.142/QQ                           EQ (27)
      GO TO 11
   10 TT=((2.0*HO+BS)*0.66+DI)*3.1416/QQ
   11 IF(ZZ-1.0)12,12,13
   12 CC=(5.0*GC+BS)*TS/((5.0*GC+BS)*TS-BS*BS)            EQ (67)
      GO TO 14
   13 QC=(4.44*GC+0.75*BO)*TS
      CC=QC/(QC-BO*BO)
   14 CS=YY/(PN*QN)                                       EQ (31a)
      IF(CS-1.0)15,15,16
   15 IF(CS-0.5)16,16,17
```

```
16 PRINT2,111.0
   GO TO 7
17 TP=3.142*DI/PX                                          EQ (41)
   IF(SK)18,18,19
18 FS=1.0
   GO TO 20
19 FS=SIN(1.571*SK/TP)*TP/(1.571*SK)                       EQ (42)
20 ZY=PX*PN
   IF(PBA-60.)21,21,22
21 D=1.0
   GO TO 23
22 D=2.0
23 U=0.0
24 U=U+1.0
   DM=U*ZY
   IF(QQ-DM)26,25,24
25 DF=SIN(1.571*D/PN)/(QN*D*SIN(1.571/(PN*QN)))            EQ (43)
   GO TO 27
26 DF=SIN(1.571*D/PN)/(QQ*D*SIN(1.571/(QQ*PN)))
27 CF=SIN(YY*1.571/(PN*QN))                                EQ (44)
   EC=QQ*SC*CF*FS/C                                        EQ (45)
   GE=CC*GC                                                EQ (69)
   IF(C1)29,28,29
28 C1=0.649*LOG(PE)+1.359                                  EQ (71)
29 IF(CW)30,30,31
30 CW=0.707*EE*C1*DF/(EP*PN)                               EQ (72)
31 IF(CP)32,32,33
32 CP=PE*(LOG(GC/TP)*.0378+1.191)                          EQ (73)
33 IF(EL)34,34,42
```

```
34 IF(RF)35,35,41
35 IF(PX-2.0)36,36,37
36 U=1.3
   GO TO 40
37 IF(PX-4.0)38,38,39
38 U=1.5
   GO TO 40
39 U=1.7
40 EL=3.142*U*YY*(DI+HS)/QQ+0.5
   GO TO 42
41 EL=2.0*CE+3.142*(0.5*HX+DB)+YY*TS*TS/SQRT(TS*TS-BS*BS)        EQ (48)
42 IF(CM)43,43,44
43 AA=SIN(3.142*PE)
   AB=SIN(1.571*PE)*4.0
   CM=(3.142*PE+AA)/AB                                           EQ (74)
44 IF(CQ)45,45,46
45 AA=1.571*PE
   AB=3.1416*PE
   CQ=(0.5*COS(AA)+AB-SIN(AB))/(4.0*SIN(AA))
46 RB=(T1+234.5)*0.00394*RS                                      EQ (52)
   PRINT3,SS,CC,HC,GE,TS,C1,TT,CW,FS,CP,DF,EL,CF,CM,EC,CQ
   PUNCH1,VA,EE,EP,PN,F,PX
   PUNCH1,RPM,PI,PF,CK,POL,DI
   PUNCH1,DU,CL,SS,HC,SF,QN
   PUNCH1,WL,BK,ZZ,BO,B1,B2
   PUNCH1,B3,BS,HO,HX,HY,HZ
   PUNCH1,HS,HT,HW,QQ,W,RF
   PUNCH1,SC,YY,C,TS,SN,DB
   PUNCH1,CE,SH,SD,TT,SK,RB
```

```
PUNCH1,RS,GC,GP,C1,CW,CP
PUNCH1,EL,CM,CQ,DW,CC,PBA
PUNCH1,G4,CS,CF,FS,EC,DF
PUNCH1,G,GE,RS,TP,BNE,BSE
PUNCH1,BNM,BSM,PNL,PSL,DR,HNP
PUNCH1,D1,WO,HD,DD,H,B
PUNCH1,BN,SB,TB,RE,T3,PT
PUNCH1,FE ,RD,RT,T2,RR,SNL
PUNCH1,WF,PE,DDR,AD,SN1,DW1
PAUSE
END
```

PASS 2

```
    1 FORMAT(E11.5,E11.5,E11.5,E11.5,E11.5,E11.5)
      DIMENSION DA(8),DX(6),DY(8),DZ(8)
      READ1, VA,EE,EP,PN,F,PX
      READ1, RPM,PI,PF,CK,POL,DI
      READ1, DU,CL,SS,HC,SF,QN
      READ1, WL,BK,ZZ,BO,B1,B2
      READ1, B3,BS,HO,HX,HY,HZ
      READ1, HS,HT,HW,QQ,W,RF
      READ1, SC,YY,C,TS,SN,DB
      READ1, CE,SH,SD,TT,SK,RB
      READ1, RS,GC,GP,C1,CW,CP
      READ1, EL,CM,CQ,DW,CC,PBA
      READ1, G4,CS,CF,FS,EC,DF
      READ1,G,GE,RS,TP,BNE,BSE
      READ1,BNM,BSM,PNL,PSL,DR,HNP
      READ1,D1,WO,HD,DD,H,B
      READ1,BN,SB,TB,RE,T3,PT
      READ1,FE,RD,RT,T2,RR,SNL
      READ 1,WF,PE,DDR,AD,SN1,DW1
      DT=DW1
      IF(ZZ-3.0)49,50,51
   49 SM=TT-BS                                          EQ (57a)
      GO TO 53
   50 SM=(3.1416*(DI+2.*HS)/QQ)-B3
      GO TO 53
   51 IF(ZZ-4.0)50,52,49
   52 SM=TT-BS*(0.554-0.888*HO/BS)
   53 HM=CL+EL                                          EQ (49)
```

```
      IF(DT) 61,61,62
   61 AC=0.785*DW*DW*SN1                                    EQ (46)
      GO TO 72
   62 ZY=0.0
      DA(1)=0.05
      DA(2)=0.072
      DA(3)=0.125
      DA(4)=0.165
      DA(5)=0.225
      DA(6)=0.438
      DA(7)=0.688
      DA(8)=1.5
      DX(1)=0.000124
      DX(2)=0.00021
      DX(3)=0.00021
      DX(4)=0.00084
      DX(5)=0.00189
      DX(6)=0.00189
      DY(1)=0.000124
      DY(2)=0.000124
      DY(3)=0.00084
      DY(4)=0.00084
      DY(5)=0.00189
      DY(6)=0.00335
      DY(7)=0.00754
      DY(8)=0.03020
      DZ(1)=0.000124
      DZ(2)=0.000124
      DZ(3)=0.000124
```

```
      DZ(4)=0.00335
      DZ(5)=0.00335
      DZ(6)=0.00754
      DZ(7)=0.0134
      DZ(8)=0.0302
   63 IF(DT-.05)201,200,200
  200 JA=0
      JB=0
      JC=0
      JD=0
   64 JA=JA+1
      JB=JB+1
      JC=JC+1
      JD=JD+1
      IF(DT-DA(JA))65,65,64
  201 D=0
      IF(ZY)71,71,54
   65 IF(DW-0.188)66,66,67
   66 CY=DX(JB-1)
      CZ=DX(JB)
      GO TO 70
   67 IF(DW-0.75)68,68,69
   68 CY=DY(JC-1)
      CZ=DY(JC)
      GO TO 70
   69 CY=DZ(JD-1)
      CZ=DZ(JD)
   70 D=CY+(CZ-CY)*(DT-DA(JA-1))/(DA(JA)-DA(JA-1))
      IF(ZY)71,71,54
```

```
 71 AC=(DT*DW-D)*SN1                                          EQ (46)
 72 IF(RT)73,73,74
 73 AS=0.785*RD*RD                                            EQ (153)
    GO TO 55
 74 ZY=1.0
    DT=RT
    DW=RD
    GO TO 63
 54 AS=RT*RD-D                                                EQ (153)
 55 S=PI/(C*AC)                                               EQ (47)
    CY=PT    *FE*0.000001/AS
    FK=RR*CY                                                  EQ (154)
    FR=(T2+234.5)*FK*0.00394                                  EQ (155)
    RC=0.321*PT    *FE*AS                                     EQ (156)
    IF(SH)202,203,202
203 ET=1
    EB=1
    GO TO 204
202 AA=0.584+(SN*SN-1.0)*0.0625*(SD*CL/(SH*HM))**2.0
    AB=(SH*SC*F*AC/(BS*RB))**2.0
    ET=AA*AB*0.00335+1.0                                      EQ (55)
    EB=ET-0.00168*AB                                          EQ (56)
204 RY=SC*QQ*0.000001*HM/(PN*AC*C*C)                          EQ (53)
    RG=RS*RY                                                  EQ (53)
    RP=RB*RY                                                  EQ (54)
    A=PI*SC*CF/(C*TS)                                         EQ (128)
    PUNCH1,VA,EE,EP,PN,F,PX
    PUNCH1,RPM,PI,PF,CK,POL,DI
    PUNCH1,DU,CL,SS,HC,SF,QN
```

```
PUNCH1,WL,BK,ZZ,B0,B1,B2
PUNCH1,B3,BS,H0,HX,HY,HZ
PUNCH1,HS,HT,HW,QQ,W,RF
PUNCH1,SC,YY,C,TS,SN,DB
PUNCH1,CE,SH,SD,TT,SK,RB
PUNCH 1, ALCO,TP,D1,FE,RD,RT
PUNCH1,T2,RR,SNL,WF,PE,SN1
PUNCH1,DW1,BP1,BP2,TP1,TP2,ALP
PUNCH1,DR,WR,TFP,DFP,DS1,ALSH
PUNCH1,P1,P2,P3,P4,P5,P7
PUNCH 1,RS,GC,PT,C1,CW,CP
PUNCH 1,EL,CM,CQ,DW,CC,PBA
PUNCH 1,GE,CS,CF,FS,EC,DF
PUNCH1,HM,SM,AS,AC,ET,EB
PUNCH1,S,FK,FR,RC,RG,RP
PUNCH1,A,DC1
PAUSE
END
```

PASS 3

```
    1 FORMAT(E11.5,E11.5,E11.5,E11.5,E11.5,E11.5)
      READ1 ,VA,EE,EP,PM,F,PX
      READ1 ,RPM,PI,PF,CK,POL,DI
      READ1 ,DU,CL,SS,HC,SF,ON
      READ1 ,WL,BK,ZZ,B0,B1,B2
      READ1 ,B3,BS,H0,HX,HY,HZ
      READ1 ,HS,HT,HW,QQ,W,RF
      READ1 ,SC,YY,C,TS,SN,DB
      READ1 ,CE,SH,SD,TT,SK,RB
      READ1 ,  ALCO,TP,D1,FE,RD,RT
      READ1 ,T2,RR,SWL,WF,PE,SN1
      READ1 ,DW1,BP1,BP2,TP1,TP2,ALP
      READ1 ,DR,WR,TFP,DFP,DS1,ALSH
      READ1 ,P1,P2,P3,P4,P5,P7
      READ1 , RS,GC,PT,C1,CW,CP
      READ1  ,EL,CM,CQ,DW,CC,PBA
      READ1  ,GE,CS,CF,FS,EC,DF
      READ1 ,HM,SM,AS,AC,ET,EB
      READ1 ,S,FK,FR,RC,RG,RP
      READ1 ,A,DC1
      IF(PBA-60.0)105,105,108
  105 IF(CS-0.667)106,106,107
  106 FF=0.25*(6.0*CS-1.0)                                    EQ (61)
  107 FF=0.25*(3.*CS+1.0)
      GO TO 75
  108 IF(CF-0.667)109,109,110
  109 FF=0.05*(24.0*CS-1.0)
      GO TO 75
```

```
110 FF=0.75
 75 CX=FF/(CF*CF*DF*DF)                                          EQ (60)
    Z=CX*20.0/(PN*QN)
    BT=3.142*DI/QQ-BO
    ZA=BT*BT/(16.0*TS*GC)
    ZB=0.35*BT/TS
    ZC=HO/BO
    ZD=HX*0.333/BS
    ZE=HY/BS
    IF(ZZ-2.0) 76,77,78
 76 PC=Z*(ZE+ZD+ZA+ZB)                                           EQ (62)
       GO TO 82
 77 PC=Z*(ZC+(2.0*HT/(BO+BS))+(HW/BS)+ZD+ZA+ZB)
    GO TO 82
 78 IF(ZZ-4.0) 79,80,81
 79 PC=Z*(ZC+(2.0*HT/(BO+B1))+(2.0*HW/(B1+B2))+(HX*0.333/B2)+ZA+ZB)
    GO TO 82
 80 PC=Z*(ZC+0.62)
    GO TO 82
 81 PC=Z*(ZE+ZD+(0.5*GC/TS)+(0.25*TS/GC)+0.6)
 82 EK=EL/(10.0**(0.103*YY*TS+0.402))                            EQ (63)
    IF(DI-8.0) 83,83,84
 83 EK=SQRT(EK)
 84 ZF=.612*LOG(10.0*CS)
    EW=6.28*EK*ZF*(TP**(0.62-(0.228*LOG(ZF))))/(CL*DF*DF)
 86 ZC=0.0
 87 ZA=3.1416*(DI+HS)/QQ
    IF(ZZ-3.0) 88,89,88
 88 TM=ZA-BS                                                     EQ (57a)
```

```
      GO TO 90
   89 TM=(3.1416*(DI+2.*BS)/QQ)-B3
   90 WI=(TM*QQ*SS*HS+(DU-HC)*3.142*HC*SS)*0.283                    EQ (66)
      PUNCH1,VA,EE,EP,PN,F,PX
      PUNCH1,RPM,PI,PF,CK,POL,DI
      PUNCH1,DU,CL,SS,HC,SF,QN
      PUNCH1,WL,BK,ZZ,BO,B1,B2
      PUNCH1,B3,BS,HO,HX,HY,HZ
      PUNCH1,HS,HT,HW,QQ,W,RF
      PUNCH1,SC,YY,C,TS,SN,DB
      PUNCH1,CE,SH,SD,TT,SK,RB
      PUNCH1,RS,GC,GP,C1,CW,CP
      PUNCH1,EL,CM,CQ,DW,CC,AD
      PUNCH1,G4,CS,CF,FS,EC,DF
      PUNCH1,G,GE,RS,TP,BNE,BSE
      PUNCH1,BNM,BSM,PNL,PSL,DR,HNP
      PUNCH1,D1,WO,HD,DD,H,B
      PUNCH1,BN,SB,TB,RE,T3,PT
      PUNCH1,FE,RD,RT,T2,RR,SNL
      PUNCH1,WF,HM,SM,AC,AS,ET
      PUNCH1,EB,S,FK,FR,RC,RG
      PUNCH1,RP,A,FF,CX,PC,EK
      PUNCH1,EW,ZC,TM,WI,PE,DDR
      PAUSE
      END
```

36000720050036002010050044000120027 52

PASS 4

```
    1 FORMAT(E11.5,E11.5,E11.5,E11.5,E11.5,E11.5)
    2 FORMAT(F7.0,F7.0,F7.0,F7.0,F7.0,F7.0,F7.0,F7.0,F7.0,F7.0)
      READ2, P1,P2,P3,P4,P5,P6,P7,PL1,PL2,PL6
       EAD2, PLC,DIR,DQ,YH,ALY,RSL,Y4,GP2,TSP,TSK
      READ2, DT0,DT1,DS1,DS2,DS3,DS4,DS5,S1,S2,S3
      READ2,S4,S5,DOS,PFHL,DBHL,WR
      READ1, VA,EE,EP,PN,F,PX
      READ1, RPM,PI,PF,CK,POL,DI
      READ1, DU,CL,SS,HC,SF,QN
      READ1, WL,BK,ZZ,B0,B1,B2
      READ1, B3,BS,HO,HX,HY,HZ
      READ1, HS,HT,HW,QQ,W,RF
      READ1, SC,YY,C,TS,SN,DB
      READ1, CE,SH,SD,TT,SK,RB
      READ1, RS,GC,GP,C1,CW,CP
      READ1, EL,CM,CQ,DW,CC,AD
      READ1, G4,CS,CF,FS,EC,DF
      READ1, G,GE,RS,TP,BNE,BSE
      READ1, BNM,BSM,PNL,PSL,DR,HNP
      READ1, D1,WO,HD,DD,H,B
      READ1, BN,SB,TB,RE,T3,PT
      READ1, FE,RD,RT,T2,RR,SNL
      READ1, WF,HM,SM,AC,AS,ET
      READ1, EB,S,FK,FR,RC,RG
      READ1, RP,A,FF,CX,PC,EK
      READ1,EW,ZC,TM,WI,PE,DDR
      IF(P1)405,404,405
  404 P1=3.19*(BNE+PL2)*TSP*PX/PL1                                EQ (80)
```

```
405 IF(P2)406,407,406
407 IF(BNE-BNM)438,437,438
438 P2=6.28*((SQRT((BNM-BNE)**2+PNL*PNL)/2.)+PL1/2.)*TSP*PX/PL2  (EQ 81)
    GO TO 406
437 P2=3.19*(PNL+PL1)*TSP*PX/PL2
406 IF(P3)408,409,408
409 P3=3.19*BNE*(HNP-TSP)*PX/((DR-DOS)*(3.1416/8.)-TSP)          EQ (82)
408 IF(P4)410,411,410
411 TEM=3.19*((DR/2.)-TSP)*PX/((DR-DOS)/2.-TSP)
    TEM1=3.19*PX/(((DR/2.)-TSP)*SIN((6.28/PX)*(1.-PE/4.))-BNE/2.)
        IF(PX-4.)414,414,413
414 IF(BNE-BNM)415,416,415
416 P4=(PNL+PL1)*TEM                                             EQ (83)
    GO TO 410
415 P4=(SQRT((BNM-BNE)**2+PNL**2)*.25+(PL1/2.))*2.*TEM
    GO TO 410
413 IF(BNE-BNM)417,418,417
418 P4=TEM1*((DR-DOS)/2.0-TSP)*(PNL+PL1)
    GO TO 410
417 P4=(SQRT((BNM-BNE)**2+PNL**2)*.25+(PL1/2.))*2.*TEM1*((DR/2.)-TS'
410 IF(P5)419,420,419
420 P5=3.19*BNE*PL6*.667*PX/PLC                                  EQ (84)
419 IF(P6)421,422,421
422 P6=3.19*PLC*PE*(DR-2.*TSP)*3.1416/PL6                        EQ (85)
421 IF(P7)424,423,424
423 P7=(3.19/4.)*3.1416*(DR+HC+HS)*(HC+HS+RSL)/(3.1416*(HC+HS)/2.) EQ(86)
424 TG=6.E6*EE/(CW*EC*RPM)                                       EQ (88)
    PUNCH1,VA,EE,EP,PN,F,PX
    PUNCH1,RPM,PI,PF,CK,POL,DI
```

```
PUNCH1,DU,CL,SS,HC,SF,QN
PUNCH1,WL,BK,ZZ,BO,B1,B2
PUNCH1,B3,BS,HO,HX,HY,HZ
PUNCH1,HS,HT,HW,QQ,W,RF
PUNCH1,SC,YY,C,TS,SN,DB
PUNCH1,CE,SH,SD,TT,SK,RB
PUNCH1,RS,GC,GP,C1,CW,CP
PUNCH1,EL,CM,CQ,DW,CC,AD
PUNCH1,G4,CS,CF,FS,EC,DF
PUNCH1,G,GE,RS,TP,BNE,BSE
PUNCH1,BNM,BSM,PNL,PSL,DR,HNP
PUNCH1,D1,WO,HD,DD,H,B
PUNCH1,BN,SB,TB,RE,T3,PT
PUNCH1,FE,RD,RT,T2,RR,SNL
PUNCH1,WF,HM,SM,AC,AS,ET
PUNCH1,EB,S,FK,FR,RC,RG
PUNCH1,RP,A,PLC,PL1,PC,EK
PUNCH1,EW,ZC,TM,WI,PE,DDR
PUNCH1,TG,P1,P2,P3,P4,P5
PUNCH1,P6,P7,DIR,DQ,YH,ALY,
PUNCH1,RSL,Y4,GP2,TSP,TSK,PFHL
PUNCH1,DBHL,DOS,WR,DTO,DT1,DS1
PUNCH1,DS2,DS3,DS4,DS5,S1,S2
PUNCH1,S3,S4,S5
PAUSE
END
```

PASS 5

```
    1 FORMAT(E11.5,E11.5,E11.5,E11.5,E11.5,E11.5)
      READ1 ,VA,EE,EP,PN,F,PX
      READ1 ,RPM,PI,PF,CK,POL,DI
      READ1 ,DU,CL,SS,HC,SF,QN
      READ1 ,WL,BK,ZZ,BO,B1,B2
      READ1 ,B3,BS,HO,HX,HY,HZ
      READ1 ,HS,HT,HW,QQ,W,RF
      READ1 ,SC,YY,C,TS,SN,DB
      READ1 ,CE,SH,SD,TT,SK,RB
      READ1 ,RS,GC,GP,C1,CW,CP
      READ1 ,EL,CM,CQ,DW,CC,AD
      READ1 ,G4,CS,CF,FS,EC,DF
      READ1 ,G,GE,RS,TP,BNE,BSE
      READ1 ,BNM,BSM,PNL,PSL,DR,HNP
      READ1 ,D1,WO,HD,DD,H,B
      READ1 ,BN,SB,TB,RE,T3,PT
      READ1 ,FE,RD,RT,T2,RR,SNL
      READ1 ,WF,HM,SM,AC,AS,ET
      READ1 ,EB,S,FK,FR,RC,RG
      READ1 ,RP,A,PLC,PL1,PC,EK
      READ1 ,EW,ZC,TM,WI,PE,DDR
      READ1 ,TG,P1,P2,P3,P4,P5
      READ1 ,P6,P7,DIR,DQ,YH,ALY
      READ1 ,RSL,Y4,GP2,TSP,TSK,PFHL
      READ1 ,DBHL,DOS,WR,DTO,DT1,DS1
      READ1 ,DS2,DS3,DS4,DS5,S1,S2
      READ1 ,S3,S4,S5
      BTT=TG/(SS*SM*QQ)                                    EQ (91)
```

```
      FQ=TG*CP/PX                                                EQ (92)
      BC=FQ/(2.*HC*SS)                                           EQ (94)
      BG=TG/(3.1416*DI*CL)                                       EQ (95)
      ALCR= 3.1416*(DU-HC)/(4.*PX)
      AY4=(3.1416/4.)*(DOS*DOS-DQ*DQ)                            EQ (112)
      AY2=3.1416*DOS*ALY                                         EQ (124)
      GA=DI*3.1416*CL
      A2=3.1416*GP2*(DIR+GP)                                     EQ (70)
      IF(G-1.0)402,403,402
  402 A3=1.571*(DTO+DT1)*SQRT(4.*Y4*Y4+(DTO-DT1)**2)             EQ (70a)
      GO TO 444
  403 A3=(DS1*S1)+(DS2*S2)+(DS3*S3)+(DS4*S4)+(DS5*S5)
      A3=3.1416*A3+(DOS**2-DS1**2)*.78
  444 ANP=PNL*(BNE+BNM)/2.                                       EQ (79)
      ASP=BSE*TSP                                                EQ (79a)
      ASK=3.1416*(DR-TSK)*TSK                                    EQ (79b)
      IF(WF)445,446,445
  446 WF=2.52E-6*(DR**2.5)*(PL1+PNL+GP2)*RPM**1.5                EQ (183)
  445 WC=.321*HM*QQ*AC*SC                                        EQ (65)
      PUNCH1,VA,EE,EP,PN,F,RPM
      PUNCH1,PI,PF,CK,POL,DI,DU
      PUNCH1,CL,SS,HC,SF,QN,WL
      PUNCH1,BK,ZZ,BO,B1,B2,B3
      PUNCH1,BS,HO,HX,HY,HZ,HT
      PUNCH1,HW,QQ,W,RF,SC,YY
      PUNCH1,C ,TS,SN,DB,CE,SH
      PUNCH1,SD,TT,SK,RB,RS,GC
      PUNCH1,C1,CW,CP,EL,CM,CQ
      PUNCH1,DW,CC,AD,CS,CF,FS
```

```
PUNCH1,EC,DF,G,RS,TP,BSE
PUNCH1,BSM,PNL,DR,D1,WO,HD
PUNCH1,DD,H,B,BN,SB,TB
PUNCH1,RE,T3,FE,RD,RT,T2
PUNCH1,RR,SNL,WF,HM,SM,AC
PUNCH1,ET,EB,S,FK,RC,RG
PUNCH1,RP,A,PLC,PL1,PC,EK
PUNCH1,EW,ZC,TM,WI,PE,DDR
PUNCH1,DIR,DOS,DQ,RSL,GP2,TSP
PUNCH1,TSK,PFHL,DBHL,GA,WC,ASK
PUNCH1,TG,BTT,FQ,BC,GE,HS
PUNCH1,ALCR,PX,ANP,ASP,HNP
PUNCH1,A2,A3,AY4,Y4,G4,GP
PUNCH1,AY2,YH,PT,FR,AS,PSL
PUNCH1,BNE,BNM,ALY,P1,P2,P3
PUNCH1,P4,P5,P6,P7,WR,BG
PAUSE
END
```

PASS 6

```
      DIMENSION AI(120)
  888 FORMAT(F10.0,F10.0,F10.0,F10.0,F10.0,F10.0)
    1 FORMAT(E11.5,E11.5,E11.5,E11.5,E11.5,E11.5)
      K=1
  823 READ888,AI(K),AI(K+1),AI(K+2),AI(K+3),AI(K+4),AI(K+5)
      K=K+6
      IF (K-119)823,824,824
  824 DO844 N=1,20
      READ1,R1,R2,R3,R4,R5,R6
      PUNCH1,R1,R2,R3,R4,R5,R6
  844 CONTINUE
      READ1,TG,BTT,FQ,BC,GE,HS
      READ1,ALCR,PX,ANP,ASP,HNP
      READ1,A2,A3,AY4,Y4,G4,GP
      READ1,AY2,YH,PT,FR,AS,PSL
      READ1,BNE,BNM,ALY,P1,P2,P3
      READ1,P4,P5,P6,P7,WR,BG
      LOAD=1
      PL71=.01*TG
  801 TTP=TG+PL71
      X=TTP/TG
      B' '=X*BTT                                          EQ (91)
      Z=FQ/PX
      PP1=X*FQ                                            EQ (93)
      BC1=(PP1/FQ)*BC                                     EQ (94)
      BG1=BG*X                                            EQ (95)
      FG=(BG1*GE)/.00319                                  EQ (96)
      NA=1
```

```
      K=1
      X=BT1
      GO TO 802
803   FT=AT*HS                                          EQ (97)
      NA=1
      K=2
      X=BC1
      GO TO 802
804   FC=AT*ALCR                                        EQ (98)
      PL7=(FT+FG+FC)*P7*.001                            EQ (99)
      IF(1.1*PL71-PL7)810,811,811
811   IF(.9*PL71-PL7)812,812,810
810   PL71=PL7
      GO TO 801
812   Z1=(.002*(FG+FC+FT))*(P1+P2+P3+P4)                EQ (100),
      FQ=PP1                                              (101),
      Z=FQ/PX                                             (102),
      Y=Z1/PX+FQ                                          (103)
      BNP=Y/ANP                                         EQ (104)
      BSP=Y/(2.*ASP)                                    EQ (105)
      NA=61
      K=3
      X=BNP
      GO TO 802
805   FNP=HNP*AT                                        EQ (106)
      NA=31
      K=4
      X=BSP
      GO TO 802
```

```
806 IF(BNE-BNM)820,821,820
820 AXX=PSL/2.
    GO TO 822
821 AXX=PSL/3.
822 FSP=AXX*AT                                  EQ (107)
    PG2=(FQ*PX+Z1+PL7)/4.                       EQ (108)
    BG2=PG2/A2                                  EQ (109)
    FG2=BG2*GP/.00319                           EQ (110)
    BY4=PG2/AY4                                 EQ (113)
    K=5
    NA=61
    X=BY4
    GO TO 802
807 FY4=AT*Y4                                   EQ (114)
    Z2=2.*(FG+FC+FT)
    Z3=Z2+FSP+FG2
    PL5=(Z3+FNP)*P5*.001
816 BNP=(((Z1+PL7+PL5)/PX)+FQ)/ANP              EQ (116)
    K=6
    NA=61
    X=BNP
    GO TO 802
808 FNP=HNP*AT                                  EQ (117)
    PL51=(Z3+FNP)*P5*.001                       EQ (118)
    IF(1.1*PL5-PL51)813,814,814
814 IF(.9*PL5-PL51)815,815,813
813 PL5=PL51
    GO TO 816
815 BG3=(FQ*PX+(Z1+PL7+PL5))/(4.*A3)            EQ (119)
```

```
      FG3=BG3*G4/.00319                                  EQ (120)
      PL6=(Z2+FSP+FNP+FY4+FG3)*P6*.001                   EQ (121)
      BG2=(FQ*PX+Z1+PL7+PL6)/(4.*A2)                     EQ (122)
      FG2=BG2*GP/.00319                                  EQ (123)
      BY2=(FQ*PX+Z1+PL7+PL5)/(4.*AY2)                    EQ (125)
      X=BY2
      K=7
      NA=91
      GO TO 802
  809 FY2=YH*AT/3.                                       EQ (126)
      FNL=Z2+FNP+FSP+FG2+FY2+FG3+FY4                     EQ (127)
      AINL=FNL/PT                                        EQ (127a)
      EFNL=AINL*FR                                       EQ (127b)
      CD=AINL/AS                                         EQ (127c)
      TG=TTP
      PUNCH1,TG,BTT,FQ,BC,GE,HS
      PUNCH1,ALCR,PX,ANP,ASP,HNP
      PUNCH1,A2,A3,AY4,Y4,G4,GP
      PUNCH1,AY2,YH,PT,FR,AS,PSL
      PUNCH1,BNE,BNM,ALY,P1,P2,P3
      PUNCH1,P4,P5,P6,P7,WR,FC
      PUNCH1,BNP,BSP,BY2,BY4,BG2,BG3
      PUNCH1,PG2,FG,FG2,FG3,FNL,AINL
      PUNCH1,EFNL,CD,BC1,BT1,BG1,FT
         PAUSE
  802 IF(AI(NA)-X)830,831,831
  831 NA=NA+3
  835 IF(AI(NA)-X)833,834,834
  833 NA=NA+2
```

```
      GO TO 835
  834 AA=AI(NA)
      BB1=AI(NA-2)
      DC=AI(NA+1)
      D=AI(NA-1)
      XX= (AA-BB1)/(.4343*(LOG(DC)-LOG(D+.0001)))
      Y=AA-XX*.4343*LOG(DC)
         AT=EXP(2.306*(X-Y)/XX)
      GO TO (838,839),LOAD
  838 GO TO (803,804,805,806,807,808,809),K
  830 GO TO (836,837),LOAD
  836 PRINT 850,
  850 FORMAT (17HMACHINE SATURATED)
      PAUSE
      END
```

PASS 7

```
    3 FORMAT(9X F12.5,2X F12.5)
    1 FORMAT(E11.5,E11.5,E11.5,E11.5,E11.5,E11.5)
      READ1 ,VA,EE,EP,PN,F,RPM
      READ1 ,PI,PF,CK,POL,DI,DU
      READ1 ,CL,SS,HC,SF,QN,WL
      READ1 ,BK,ZZ,BO,B1,B2,B3
      READ1 ,BS,HO,HX,HY,HZ,HT
      READ1 ,HW,QQ,W,RF,SC,YY
      READ1 ,C ,TS,SN,DB,CE,SH
      READ1 ,SD,TT,SK,RB,RS,GC
      READ1 ,C1,CW,CP,EL,CM,CQ
      READ1 ,DW,CC,AD,CS,CF,FS
      READ1 ,EC,DF,G,RS,TP,BSE
      READ1 ,BSM,PNL,DR,D1,WO,HD
      READ1 ,DD,H,B,BN,SB,TB
      READ1 ,RE,T3,FE,RD,RT,T2
      READ1 ,RR,SNL,WF,HM,SM,AC
      READ1 ,ET,EB,S,FK,RC,RG
      READ1 ,RP,A,PLC,PL1,PC
      READ1 ,EW,ZC,TM,WI,PE,DDR
      READ1 ,DIR,DOS,DQ,RSL,GP2,TSP
      READ1 ,TSK,PFHL,DBHL,GA,WC,ASK
      READ1 ,TG,BTT,FQ,BC,GE,HS
      READ1 ,ALCR,PX,ANP,ASP,HNP
      READ1 ,A2,A3,AY4,Y4,G4,GP
      READ1 ,AY2,YH,PT,FR,AS,PSL
      READ1 ,BNE,BNM,ALY,P1,P2,P3
      READ1 ,P4,P5,P6,P7,WR,FC
```

```
      READ1 ,BNP,BSP,BY2,BY4,BG2,BG3
      READ1 ,PG2,FG,FG2,FG3,FNL,AINL
      READ1 ,EFNL,CD,BC1,BT1,BG1,FT
      XR=.0707*A*DF/(C1*BG1)                                          EQ (129)
      XL=XR*(PC+EW)                                                   EQ (130)
      XD=    EC*PI*CM*DF* 90./(PX*(2.*FG+FG2+FG3))                    EQ (131)
      XQ=CQ*XD/(CM*C1)                                                EQ (132)
      XA=XL+XD                                                        EQ (133)
      XB=XL+XQ                                                        EQ (134)
      VR= .262*DR*RPM                                                 EQ (145)
      GE1=GE*(2.*FG+FG2+FG3)/(2.*FG)
      PGX=3.19*TP*SS*CP/GE
      PGE=PG2/(AINL*PT*.001)
      XF=XR*PX/SS*((C1/CP)**2*(PGX*PGX)/(6.28*PGE*(GE1/GE)**2))       EQ (160)
      SI=2.*PT*PT*PGE*1.E-8                                           EQ (161)
      FL=P1+P2+P3+P4+P5+P6                                            EQ (161a)
      IF(BN)511,510,511
  511 IF(H)501,502,501
  502 BD=6.38*(HD/WO+1.12)                                            EQ (158)
      GO TO 503
  501 BD=6.38*(HD/WO+H/(3.*B)+.5)
  503 BE=6.38*(BNE-TB*(BN-1.))/(3.*GE)                                EQ (159)
      X1=XR*COS((BN-1.)*TB*3.1416/(2.*TP))*(BD+BE)*FL/(BD+BE+FL)      EQ (163)
      XXA=20.*TB/TP
      IF(H)504,505,504
  504 X2=XR*(.5+GC/TB+HD/WO+H/(3.*B))*XXA                             EQ (165)
      GO TO 506
  505 X2=XR*(GC/TB+1.12+HD/WO)*XXA
      GO TO 506
```

```
510 X1=0
    X2=0
506 XU=XF+XL                                                    EQ (166)
    XS=.88*XU                                                   EQ (167)
    IF(BN)507,508,507
507 XX=XL+X1                                                    EQ (168)
    XY=XL+X2                                                    EQ (169)
    GO TO 509
508 XX=XS
    XY=XB
509 PRINT3,AC,A,S,XR,HM,XL,RG,XD,RP,XQ,ET,XA,EB,XB,PC,XF,EW,SI,WC,X1
    PRINT3,WI,X2,TP,XU,WR,XS,VR,XX,AS,XY
    PUNCH1,TSK,PFHL,DBHL,GA,EP,ASK
    PUNCH1,BSP,BY2,BY4,BG2,ALCR,ANP
    PUNCH1,ASP,HNP,A2,A3,AY4,Y4
    PUNCH1,G4,GP,AY2,YH,PT,SNL
    PUNCH1,AS,PSL,BNE,BNM,ALY,BNP
    PUNCH1,BG3,AINL,EFNL,CD,CP
    PUNCH1,ET,EB,RP,PF,SM,WF
    PUNCH1,RSL,CK,C,PT,RP,POL
    PUNCH1,PI,FNL,PG2,FG,FG2,FG3
    PUNCH1,HZ,SC,YY,CM,CF,DF
    PUNCH1,AD,FK,RG,PC,EW,DDR
    PUNCH1,GE,SI,XL,XS,XA,XQ
    PUNCH1,XB,X2,XD,XR,TT,W
    PUNCH1,PN,F,RPM,DI,DU,CL
    PUNCH1,SS,HC,QN,WL,BK,BO
    PUNCH1,QQ,TS,GC,C1,CC,D1
    PUNCH1,WO,HD,DD,H,B,BN
```

```
PUNCH1,SB,TB,RE,T3,HS,PX
PUNCH1,BC1,BT1,BG1,VA,BS,HX
PUNCH1,FR,RC,FT,FC,FQ,TG
PUNCH1,P1,P2,P3,P4,P5,P6
PUNCH1,P7,EE,CW,SNL,EC
PAUSE
END
```

PASS 8

```
    1 FORMAT(E11.5,E11.5,E11.5,E11.5,E11.5,E11.5)
      DO998 K=1,8
      READ1,R1,R2,R3,R4,R5,R6
      PUNCH1,R1,R2,R3,R4,R5,R6
  998 CONTINUE
      READ1,PI,FNL,PG2,FG,FG2,FG3
      READ1,HZ,SC,YY,CM,CF,DF
      READ1,AD,FK,RG,PC,EW,DDR
      READ1,GE,SI,XL,XS,XA,XQ
      READ1,XB,X2,XD,XR,TT,W
      READ1,PN,F,RPM,DI,DU,CL
      READ1,SS,HC,QN,WL,BK,BO
      READ1,QQ,TS,GC,C1,CC,D1
      READ1,WO,HD,DD,H,B,BN
      READ1,SB,TB,RE,T3,HS,PX
      READ1,BC1,BT1,BG1,VA,BS,HX
      READ1 ,FR,RC,FT,FC,FQ,TG
      READ1 ,P1,P2,P3,P4,P5,P6
      READ1,P7,EE,CW,SNL,EC
      WQ=(DU-HC)*1.42*HC*SS*(BC1/BK)**2.0*WL                    EQ (184)
      WT=   SM    *QQ*SS*HS*0.453*(BT1/BK)**2.0*WL              EQ (185)
  132 D2=BG1**2.5*0.000061
      D3=(0.0167*QQ*RPM)**1.65*0.000015147
      IF(TS-0.9)133,133,134
  133 D4=TS**1.285*0.81
      GO TO 137
  134 IF(TS-2.0)135,135,136
  135 D4=TS**1.145*0.79
```

```
      GO TO 137
136   D4=TS**0.79*0.92
137   D7=BO/GC
      IF(D7-1.7)138,138,139
138   D5=D7**2.31*0.3
      GO TO 144
139   IF(D7-3.0)140,140,141
140   D5=D7**2.0*0.35
      GO TO 144
141   IF(D7-5.0)142,142,143
142   D5=D7**1.4*0.625
      GO TO 144
143   D5=D7**0.965*1.38
144   D6=10.0**(0.932*C1-1.606)
      BA=3.142*D1*CL
      WN=D1*D2*D3*D4*D5*D6*BA                                    EQ (186)
      IF(BN) 206,207,206
206   AA=WO/(GC*CC)
      IF(AA-0.65)145,145,146
145   VT=LOG(10.0*AA)*(-0.242)+0.59
      GO TO 147
146   VT=0.327-(AA*0.266)
147   FS1=2.0*QN*PN*F
      FS2=2.0*FS1
151   RM=RE*0.000001
153   AA=(FS1/RM)**0.5*DD*0.32
      AB=(FS2/RM)**0.5*DD*0.32
      IF(AA-2.5) 160,160,161
160   V1=1.0-0.15*AA+0.3*AA*AA
      GO TO 162
```

```
161 V1=AA
162 IF(AB-2.5) 163,163,164
163 V2=1.0-0.15*AB+0.3*AB*AB
    GO TO 165
164 V2=AB
165 IF(H-B) 167,166,167
166 VC=0.75/V1
    GO TO 169
167 IF(DD) 166,168,166
168 VC=H/(3.0*B*V1)
169 VS=HD/WO+VT+VC
    VG=TB/(CC*GC)
    Q1=1.0-(1.0/(((BO*0.5/GC)**2.0+1.0)**0.5))
    QZ=BO/TS
    Q2=1.05*SIN(QZ*2.844)
    IF(QZ-0.37)170,170,171
170 Q3=0.46
    GO TO 172
171 Q3=0.23*SIN(10.46*QZ-2.1)+0.23
172 Q4=SIN(6.283*TB/TS-1.571)+1.0
    Q5=SIN(12.566*TB/TS-1.571)+1.0
    IF(DD) 174,174,173
173 AB=0.785*DD*DD
    GO TO 175
174 AB=H*B
175 W2=PX*BN*SB*RM*1.246/AB
    W3=(Q2/(2.0*VS+(VG/Q4)))**2.0*V1
    W5=(Q3/(2.0*VS+(VG/Q5)))**2.0*V2
    WD=(TS*    Q1*CC)**2.0*W2*(W3+W5)*BG1                    EQ (193)
    GO TO 208
207 WD=0
```

```
208 PUNCH1,PI,FNL,PG2,FG,FG2,FG
    PUNCH1,HZ,SC,YY,CM,CF,DF
    PUNCH1,AD,FK,RG,PC,EW,DDR
    PUNCH1,GE,SI,XL,XS,XA,XQ
    PUNCH1,XB,X2,XD,XR,TT,W
    PUNCH1,PN,F,RPM,DI,DU,CL
    PUNCH1,SS,HC,QN,WL,BK,BO
    PUNCH1,QQ,TS,GC,C1,CC,D1
    PUNCH1,WO,HD,DD,H,B,BN
    PUNCH1,SB,TB,RE,T3,HS,PX
    PUNCH1,BC1,BT1,BG1,VA,BS,HX
    PUNCH1,WT,WQ,WN,WD,FR,RC
    PUNCH1,FQ,TG,FC,FT,P1,P2
    PUNCH1,P3,P4,P5,P6,P7
    PUNCH1,EE,CW,SNL,EC
    PAUSE
    END
```

PASS 9

```
    1 FORMAT(E11.5,E11.5,E11.5,E11.5,E11.5,E11.5)
    3 FORMAT(9X F12.5,2X F12.5)
    4 FORMAT(9X F12.5/9X F12.5/)
      DO999 K=1,8
      READ1,R1,R2,R3,R4,R5,R6
      PUNCH1,R1,R2,R3,R4,R5,R6
  999 CONTINUE
      READ1,PI,FNL,PG2,FG,FG2,FG3
      READ1,HZ,SC,YY,CM,CF,DF
      READ1,AD,FK,RG,PC,EW,DDR
      READ1,GE,SI,XL,XS,XA,XQ
      READ1,XB,X2,XD,XR,TT,W
      READ1,PN,F,RPM,DI,DU,CL
      READ1,SS,HC,QN,WL,BK,BO
      READ1,QQ,TS,GC,C1,CC,D1
      READ1,WO,HD,DD,H,B,BN
      READ1,SB,TB,RE,T3,HS,PX
      READ1,BC1,BT1,BG1,VA,BS,HX
      READ1 ,WT,WQ,WN,WD,FR,RC
      READ1,FQ,TG,FC,FT,P1,P2
      READ1,P3,P4,P5,P6,P7
      READ1 ,EE,CW,SNL,EC
      IF(BN)601,610,601
  601 REH=RE*(T3+234.5)/254.5                                  EQ (143)
      IF(H)603,604,603
  603 ACD=H*B                                                  EQ (144)
      GO TO 605
  604 ACD=.7854*DD*DD
```

```
605 XM=(XD/(C1*CM))*(2.*FG+FG2+FG3)/FNL                          EQ (170)
    RDB=((100.*XR*PX*REH)/(F*SS))
    RDB=RDB*((SB/(BN*ACD*PX))+(.637*DDR/(AD*PX*PX)))
    ANN=RDB/XM
    IF(H)606,607,606
606 XDD=(20.*XR/BN)*(H/(3.*B)+WO/AD)+ 5.*XM/(6.*BN*BN)
    GO TO 608
607 XDD=(20.*XR/BN)*(.62+WO/HD)+ 5.*XM/(6.*BN*BN)                EQ (170)
608 SIG= XDD/XM
    AA=4.*SIG*SIG+ANN*ANN
    XN=(XM*(4.*SIG+AA)/((1.+SIG)**2*4.+ANN*ANN))+XL              EQ (170)
    AA=3.*YY/(4.*PN*QN)
    AA1=AA*4.
    IF(W) 609,610,609
610 XO=0.
    GO TO 621
609 IF(SC-1.) 611,612,611
612 AKX=1.
    GO TO 615
611 AKX=AA1-2.
615 IF(SC-1.)613,614,613
614 AKX1=1.
    GO TO 618
613 IF((YY/(PN*QN))-.667)616,617,617
616 AKX1=AA+.25
    GO TO 618
617 AKX1=AA-.25
618 IF(AKX)622,623,622
623 ABL=0.
```

```
      GO TO 620
622   BB=6.35*DI/(PX*GE)
      ABL=(AKX/(CF*CF))*.07*BB
      IF(BN)619,620,619
619   ABL=((AKX*X2/AKX1)+ABL)/((AKX*X2/AKX1)*ABL)
620   XO=(AKX/AKX1)*(ABL+PC)+ .2*EW
      XO=XO+(1.667*(HX+2.*HZ)/(PN*QN*CF*CF*DF*DF*BS))          EQ (172)
621   TC= SI/(2.*FK)                                           EQ (176)
      TA=XN/(628.32*F*(PN*PI*PI*RG/VA))*1.E3                   EQ (177)
      T5=XS*TC/XA                                              EQ (178)
      IF(F-60.)624,625,624
625   T4=.035                                                  EQ (179)
      GO TO 626
624   T4=.005
626   FSC=XA*(2.*FG+FG2+FG3)/100.                              EQ (180)
      SCR=FNL/FSC                                              EQ (181)
      PRINT3,FK,XN,FR,XO,RC,TG,TC,FQ,TA,BG1,T5,BT1,T4,BC1,P1,FT,P2,FC
      PRINT3,P3,FG,P4,FSC,P5,SCR
      PRINT4,P6,P7
      PUNCH1,PI,FNL,PG2,FG,FG2,FG3
      PUNCH1,HZ,SC,YY,CM,CF,DF
      PUNCH1,AD,FK,RG,PC,EW,DDR
      PUNCH1,GE,SI,XL,XS,XA,XQ
      PUNCH1,XB,X2,XD,XR,TT,W
      PUNCH1,PN,F,RPM,DI,DU,CL
      PUNCH1,SS,HC,QN,WL,BK,BO
      PUNCH1,QQ,TS,GC,C1,CC,D1
      PUNCH1,WO,HD,DD,H,B,BN
      PUNCH1,SB,TB,RE,T3,HS,PX
```

```
PUNCH1,BC1,BT1,BG1,VA,BS,HX
PUNCH1,WT,WQ,WN,WD,FR,RC
PUNCH1,FQ,TG,FC,FT,FSC,SCR
PUNCH1,P1,P2,P3,P4,P5,P6
PUNCH1,P7,EE,CW,SNL,EC
PFAUSE
END
```

```
PASS 10
      DIMENSION YB(4),EX(4),EDA(4),DX(4)
    1 FORMAT(E11.5,E11.5,E11.5,E11.5,E11.5,E11.5)
  994 FORMAT (I3)
  824 READ1 ,TSK,PFHL,DBHL,GA,EP,ASK
      READ1 ,BSP,BY2,BY4,BG2,ALCR,ANP
      READ1 ,ASP,HNP,A2,A3,AY4,Y4
      READ1 ,G4,GP,AY2,YH,PT
      READ1 ,AS,PSL,BNE,BNM,ALY,BNP
      READ1 ,BG3,AINL,EFNL,CD,CP
      READ1 ,ET,EB,RP,PF,SM,WF
      READ1 ,RSL,CK,C,PT,RP,POL
      READ1 ,PI,FNL,PG2,FG,FG2,FG3
      READ1 ,HZ,SC,YY,CM,CF,DF
      READ1 ,AD,FK,RG,PC,EW,DDR
      READ1 ,GE,SI,XL,XS,XA,XQ
      READ1 ,XB,X2,XD,XR,TT,W
      READ1 ,PN,F,RPM,DI,DU,CL
      READ1 ,SS,HC,QN,WL,BK,BO
      READ1 ,QQ,TS,GC,C1,CC,D1
      READ1 ,WO,HD,DD,H,B,BN
      READ1 ,SB,TB,RE,T3,HS,PX
      READ1 ,BC1,BT1,BG1,VA,BS,HX
      READ1 ,WT,WQ,WN,WD,FR,RC
      READ1 ,FQ,TG,FC,FT,FSC,SCR
      READ1 ,P1,P2,P3,P4,P5,P6
      READ1 ,P7,EE,CW,SNL,EC
       AN=ATAN(SQRT(1.-PF*PF)/PF)                                  EQ (198)
       AX=SIN(AN)
```

```
      YB(1)=1.
      YB(2)=1.5
      YB(3)=2.
      YB(4)=POL
703 DO777 K=1 ,4
      AE=ATAN((AX+YB(K)*XB/100.)/PF)
     EDA(K)=COS(AE-AN)+YB(K)*(XA/100.)*SIN(AE)                    EQ (198)
      DX(K)=EDA(K)-(.93*YB(K)*XD/100.)*SIN(AE)
777 EX(K)=EP+PI*YB(K)*RP                                          EQ (197)
     AAX=(P1+P2+P3+P4)*.001
     P5=.001*P5
     P6=.001*P6
     P7=.001*P7
     IF(BNE-BNM)924,925,924
925 AA=PSL/3.
     GO TO 927
924 AA=PSL/2.
927  PUNCH1,EDA(1),EDA(2),EDA(3),EDA(4)
      PUNCH1,EX(1),EX(2),EX(3),EX(4)
      PUNCH1,DX(1),DX(2),DX(3),DX(4)
      PUNCH1,POL,FG,FT,FC,PF,GE
      PUNCH1,GA,TG,EP,CP,SS,SM
      PUNCH1,QQ,HS,PX,CK,ASP,AA
      PUNCH1,ANP,HNP,ASK,RSL,GP,AY2
      PUNCH1,YH,A2,A3,G4,AY4,ALY
      PUNCH1,PT,FR,AS,P5,P6,P7
      PUNCH1,AAX,GC
     IF(SNL)928,929,928
929 KA=6
```

SAB 11 DATE 11-3-64

KILL LIST FOR SAB 11

Accession Nos.: 36540 through 36765 226

Total Number of Prepublication Kills 2

Actual Total Number of Accessions in this Issue 224

The following is a breakdown of the Prepublication Kills:

ACCESSION NO.	REASON FOR ACTION
X64-36584	Duplicate of X64-35709
X64-36674	Duplicate of X64-36195

The Following is a Breakdown of the Postpublication Kills:

ACCESSION NO.	REASON FOR ACTION

```
      GO TO 930
  928 KA=13
  930 PUNCH994,KA
      PUNCH1,PFHL,DBHL,BSP,BY2,BY4,SNL
       PUNCH1,BG2,SC,BNP,BG3,AINL,EFNL
       PUNCH1,CD,ET,EB,WF,C,PI
       PUNCH1,FNL,FK,RG,XA,XQ,XD
       PUNCH1,PN,BO,RE,T3,WT,WQ
       PUNCH1,WN,WD,RP,RC,FSC,SCR
      IF(SNL)931,932,931
  931 PUNCH1,GE,SS,SM,QQ,HS,PX
      PUNCH1,ASP,ANP,HNP,GP,AY2,YH
      PUNCH1,A2,A3,G4,AY4,ALY,PT
      PUNCH1,FR,AS,P5,P6,P7,GA
      PUNCH1,ALCR,Y4,RPM,HC,AAX,GC
      PUNCH1,EE,CW,SNL,EC,BNE,BNM
      PUNCH1,P1,P2,P3,P4,CP,PSL
  932 PAUSE
      END
```

PASS 11

```
      DIMENSION AI(120),EDA(4),EX(4),DX(4),BNPL(4),BSPL(4),BY2L(4)
      DIMENSION BY4L(4),BG2L(4),BG3L(4),FFL(4),AIFL(4),EPFL(4),CDD(4)
     DIMENSION FGL(4)
    1 FORMAT(E11.5,E11.5,E11.5.E11.5,E11.5,E11.5)
  888 FORMAT(F10.0,F10.0,F10.0,F10.0,F10.0,F10.0)
  994 FORMAT (I3)
     K=1
  823 READ888,AI(K),AI(K+1),AI(K+2),AI(K+3),AI(K+4),AI(K+5)
     K=K+6
     IF (K-119)823,824,824
  824 READ1  ,EDA(1),EDA(2),EDA(3),EDA(4)
     READ1  ,EX(1),EX(2),EX(3),EX(4)
     READ1  ,DX(1),DX(2),DX(3),DX(4)
      READ1 ,POL,FG,FT,FC,PF,GE
      READ1 ,GA,TG,EP,CP,SS,SM
      READ1 ,QQ,HS,PX,CK,ASP,AA
      READ1 ,ANP,HNP,ASK,RSL,GP,AY2
      READ1 ,YH,A2,A3,G4,AY4,ALY
      READ1 ,PT,FR,AS,P5,P6,P7
     READ1 ,AAX,GC
     READ 994,KA
     DO 995K=1,KA
     READ1,ED,ENL,FTL,FCL,X,PTT
  995 PUNCH1,ED,ENL,FTL,FCL,X,PTT
     LOAD=2
     JA=0
     DO996 J=1,4
      ED=EDA(J)
```

EQ (198

```
      ENL=EX(J)                                          EQ (197)
      BB=ED*FG                                           EQ (199)
      FTL=FT*(1.+PF)                                     EQ (200)
      FCL=FC                                             EQ (201)
      PL7L=P7      *(BB+FTL+FCL)                         EQ (202)
      BB=BB+(PL7L*GE)/(.00319*GA)                        EQ (203)
      PLL=TG*ENL/EP                                      EQ (204)
      PTL1=PLL+PL7L/CP
      X  =PTL1/(SS*SM*QQ)
      NA=1
      K=1
      GO TO 802
  910 FTL=AT*HS*(1.+PF)                                  EQ (206)
      PL7L=P7     *(BB+FTL+FCL)                          EQ (207)
      PTL=PLL+PL7L/CP                                    EQ (208)
      FGL(J)=BB+(PL7L*GE)/(GA*.00319)                    EQ (208a)
       PTT=(2.*(FGL(J)+FTL+FCL))*AAX
      FQ=PTL*CP/PX
      IF(PF-.95)921,921,922
  922 FQL=CK*FQ                                          EQ (213)
      GO TO 923
  921  FQL=FQ*DX(J)
  923 PSPL=FQL/2.+PTT/(2.*PX)                            EQ (214)
       X=PSPL/ASP
       BSPL(J)=X                                         EQ (215)
      NA=31
      K=2
      GO TO 802
  911 FSPL=AA*AT                                         EQ (216)
```

```
      PNPL=FQL+PTT/PX                                    EQ (217)
      X=PNPL/ANP                                         EQ (218)
      K=3
      NA=61
      GO TO 802
  912 FNPL=AT*HNP                                        EQ (219)
      BB=2.*(FGL(J)+FTL+FCL)
      P6L=P6*      (FSPL+FNPL+BB)                        EQ (220)
      PSK=PSPL*PX/2.+P6L/2.                              EQ (221)
      BSK=PSK/ASK                                        EQ (222)
      NA=31
      K=4
      X=BSK
      GO TO 802
  913 FSK=RSL*AT                                         EQ (223)
       BG2L(J)=PSK/A2                                    EQ (224)
      FG2L=BG2L(J)*GP/.00319                             EQ (225)
      PL5=P5*      (FNPL+BB+FSPL+FG2L)                   EQ (226)
      PY2=PSK+PL5/2.                                     EQ (227)
       X=PY2/AY2
       BY2L(J)=X                                         EQ (228)
      K=5
      NA=91
      GO TO 802
  914 FY2L=AT*YH/3.                                      EQ (229)
       BG3L(J)=PY2/A3                                    EQ (230)
      FG3L=BG3L(J)*G4/.00319                             EQ (231)
       X=PY2/AY4
       BY4L(J)=X                                         EQ (232)
```

```
      NA=61
      K=6
      GO TO 802
915   FY4L=ALY*AT/2.                                          EQ (233)
       X=2.*PY2/(4.*ANP)
       BNPL(J)=X                                              EQ (234)
      NA=61
      K=7
      GO TO 802
916   FNPL=HNP*AT                                             EQ (235)
       FFL(J)=BB+FSPL+FNPL+FSK+FG2L+FY2L+FG3L+FY4L            EQ (236)
      AIFL(J)=FFL(J)/PT                                       EQ (237)
       EPFL(J)=AIFL(J)*FR                                     EQ (238)
996    CDD(J)=AIFL(J)/AS                                      EQ (239)
837   JA=JA/6
      PUNCH994,JA
      IF(JA)970,971,970
970   DO 997 K=1,JA
      PUNCH1,BNPL(K),BSPL(K),BY2L(K),BY4L(K),BG2L(K),BG3L(K)
997   PUNCH1,FFL(K),AIFL(K),EPFL(K),CDD(K),FGL(K)
971   PUNCH1,POL,FG,PF,EP,GE,FR
      PUNCH1,PT,GC
      PAUSE
802   IF(AI(NA)-X)830,831,831
831   NA=NA+3
835   IF(AI(NA)-X)833,834,834
833   NA=NA+2
      GO TO 835
834   A=AI(NA)
```

```
      BB1=AI(NA-2)
      DC=AI(NA+1)
      D=AI(NA-1)
      XX=(A-BB1)/(.4343*(LOG(DC)-LOG(D+.00001)))
      Y=A-XX*.4343*LOG(DC)
         AT=EXP(2.306*(X-Y)/XX)
      GO TO (838,839),LOAD
  839 JA=JA+1
      GO TO (910,911,912,913,914,915,916),K
  830 GO TO (836,837),LOAD
      END
```

PASS 12

```
      DIMENSION BNPL(4),BSPL(4),BY2L(4),BY4L(4),BG2L(4),BG3L(4),FFL(4)
      DIMENSION AIFL(4),EPFL(4),CDD(4),FGL(4), STTL(4),WDL(4)
      DIMENSION SCUL(4),EDDL(4),WNL(4),FCUL(4),TOTL(4),PEFF(4),YB(4)
  961 FORMAT(F11.3,8X F11.3,F11.3,F11.3,F11.3)
    1 FORMAT(E11.5,E11.5,E11.5,E11.5,E11.5,E11.5)
  994 FORMAT (I3)
      DO 950 K=1,4
      BSPL(K)=0
      BNPL(K)=0
      BY2L(K)=0
      BY4L(K)=0
      BG2L(K)=0
      BG3L(K)=0
      FFL(K)=0
      CDD(K)=0
      AIFL(K)=0
      EPFL(K)=0
      FGL(K)=0
      STTL(K)=0
      WDL(K)=0
      SCUL(K)=0
      EDDL(K)=0
      WNL(K)=0
      FCUL(K)=0
      TOTL(K)=0
  950 PEFF(K)=0
      READ1,PFHL,DBHL,BSP,BY2,BY4,SNL
      READ1,BG2,SC,BNP,BG3,AINL,EPNL
```

```
      READ1,CD,ET,EB,WF,C,PI
      READ1,FNL,FK,RG,XA,XQ,XD
      READ1,PN,BO,RE,T3,WT,WQ
      READ1,WN,WD,RP,RC,FSC,SCR
      IF(SNL)993,993,992
  992 DO 991 L=1,7
      READ1 ,POL,FG,PF,EP,GE,FR
  991 PUNCH1,POL,FG,PF,EP,GE,FR
  993 READ994,JA
      IF(JA)941,942,941
  941 DO 943 K=1,JA
      READ1,BNPL(K),BSPL(K),BY2L(K),BY4L(K),BG2L(K),BG3L(K)
  943 READ1,FFL(K),AIFL(K),EPFL(K),CDD(K),FGL(K)
  942 READ1,POL,FG,PF,EP,GE,FR
      READ1,PT,GC
      ABX=0
      YB(1)=1.
      YB(2)=1.5
      YB(3)=2.
      YB(4)=POL
      AAX= RE*((T3+234.5)/254.5)
      AAX=AAX/RE
      BX=PFHL+DBHL
      AXX=BO/GC
      IF(AXX-1.)964,965,964
  965 AKSC=2.6
      GO TO 957
  964 IF(AXX-3.75)955,955,956
  955 AKSC=10.**.178/((AXX-1.)**.334)
```

```
      GO TO957
956   AKSC=10.**.11/((AXX-1.)**.174)
957   FEL=AINL*AINL*FK*2.
      TL=WF+WQ+WT+WD+WN+FEL
      IF(POL)966,967,966
967   IF(JA-4 )966,968,966
968   JA=JA-1
966   DO 951 K=1,JA
      FCUL(K)=2.*(AIFL(K)**2)*FR                                  EQ (241)
      AXX=(.4*XA/100.)*YB(K)
      IF(AXX-1.)952,953,953
952   AXX=AXX**1.8
      GO TO 954
953   AXX=AXX**2
954   STTL(K)=(2.*AXX+1.)*WT                                      EQ (242)
      AXX =  ((AKSC*PI*YB(K)*SC)/(C*FGL(K)))**2+1.
      WNL(K)=AXX*WN                                               EQ (243)
      WDL(K)=AXX*WD*AAX                                           EQ (244)
      SCUL(K)=PN*PI*PI*YB(K)*RP                                   EQ (245)
      EDDL(K)=(((ET+EB)/2.)-1.)*SCUL(K)                           EQ (246)
      TOTL(K)=SCUL(K)+WF+STTL(K)+WQ+WNL (K)+WDL(K)+EDDL(K)+FCUL(K)+BX
      PEF=3.*EP*PI*YB(K)*PF                                       EQ (247)
951   PEFF(K)=PEF*100./(PEF+TOTL(K))                              EQ (248)
      IF(POL)958,959,958
958   PRINT961,BNP,BNPL(1),BNPL(2),BNPL(3),BNPL(4)
      PRINT961,BSP,BSPL(1),BSPL(2),BSPL(3),BSPL(4)
      PRINT961,BY2,BY2L(1),BY2L(2),BY2L(3),BY2L(4)
      PRINT961,BY4,BY4L(1),BY4L(2),BY4L(3),BY4L(4)
      PRINT961,BG3,BG3L(1),BG3L(2),BG3L(3),BG3L(4)
```

```
      PRINT961,BG2,BG2L(1),BG2L(2),BG2L(3),BG2L(4)
      PRINT961,FNL,FFL(1),FFL(2),FFL(3),FFL(4)
      PRINT961,AINL,AIFL(1),AIFL(2),AIFL(3),AIFL(4)
      PRINT961,CD,CDD(1),CDD(2),CDD(3),CDD(4)
      PRINT961,EPNL,EPFL(1),EPFL(2),EPFL(3),EPFL(4)
      PRINT961,WQ,WQ,WQ,WQ,WQ
      PRINT961,WT,STTL(1),STTL(2),STTL(3),STTL(4)
      PRINT961,WD,WDL(1),WDL(2),WDL(3),WDL(4)
      PRINT961,ABX,SCUL(1),SCUL(2),SCUL(3),SCUL(4)
      PRINT961,ABX,EDDL(1),EDDL(2),EDDL(3),EDDL(4)
      PRINT961,WN,WNL(1),WNL(2),WNL(3),WNL(4)
      PRINT961,FEL,FCUL(1),FCUL(2),FCUL(3),FCUL(4)
      PRINT961,WF,WF,WF,WF,WF
      PRINT961,TL,TOTL(1),TOTL(2),TOTL(3),TOTL(4)
      PRINT961,ABX,PEFF(1),PEFF(2),PEFF(3),PEFF(4)
      PAUSE
  959 PRINT961,BNP,BNPL(1),BNPL(2),BNPL(3)
      PRINT961,BSP,BSPL(1),BSPL(2),BSPL(3)
      PRINT961,BY2,BY2L(1),BY2L(2),BY2L(3)
      PRINT961,BY4,BY4L(1),BY4L(2),BY4L(3)
      PRINT961,BG3,BG3L(1),BG3L(2),BG3L(3)
      PRINT961,BG2,BG2L(1),BG2L(2),BG2L(3)
      PRINT961,FNL,FFL(1),FFL(2),FFL(3)
      PRINT961,AINL,AIFL(1),AIFL(2),AIFL(3)
      PRINT961,CD,CDD(1),CDD(2),CDD(3)
      PRINT961,EPNL,EPFL(1),EPFL(2),EPFL(3)
      PRINT961,WQ,WQ,WQ,WQ
      PRINT961,WT,STTL(1),STTL(2),STTL(3)
      PRINT961,WD,WDL(1),WDL(2),WDL(3)
```

```
PRINT961,ABX,SCUL(1),SCUL(2),SCUL(3)
PRINT961,ABX,EDDL(1),EDDL(2),EDDL(3)
PRINT961,WN,WNL(1),WNL(2),WNL(3)
PRINT961,FEL,FCUL(1),FCUL(2),FCUL(3)
PRINT961,WF,WF,WF,WF
PRINT961,TL,TOTL(1),TOTL(2),TOTL(3)
PRINT961,ABX,PEFF(1),PEFF(2),PEFF(3)
PAUSE
END
```

PASS 13

```
      DIMENSION AI(120)
  977 FORMAT(F12.5,F12.5,F12.5,F12.5,F12.5,F12.5)
  979 FORMAT(F12.5,F12.5,F12.5,F12.5,F12.5,F12.5//)
  888 FORMAT(F10.0,F10.0,F10.0,F10.0,F10.0,F10.0)
    1 FORMAT(E11.5,E11.5,E11.5,E11.5,E11.5,E11.5)
      K=1
  823 READ888,AI(K),AI(K+1),AI(K+2),AI(K+3),AI(K+4),AI(K+5)
      K=K+6
      IF (K-119)823,824,824
  824 READ1 ,GE,SS,SM,QQ,HS,PX
      READ1 ,ASP,ANP,HNP,GP,AY2,YH
      READ1 ,A2,A3,G4,AY4,ALY,PT
      READ1 ,FR,AS,P5,P6,P7,GA
      READ1 ,ALCR,Y4,RPM,HC,AAX,GC
      READ1 ,EE,CW,SNL,EC,BNE,BNM
      READ1 ,P1,P2,P3,P4,CP,PSL
      LOAD =1
      YA=.8
      P5=1000.*P5
      P6=1000.*P6
      P7=1000.*P7
      DO 899 L=1,9
      BX=YA*EE
      YA=YA+.1
      TG=6.E6*BX/(CW*EC*RPM)
      BTT=TG/(SS*SM*QQ)
      FQ=TG*CP/PX
      BC=FQ/(2.*HC*SS)
```

```
      BG=TG/GA
      PL71=.01*TG
  801 TTP=TG+PL71
      X=TTP/TG
      BT1=X*BTT
      Z=FQ/PX
      PP1=X*FQ
      BC1=(PP1/FQ)*BC
      BG1=BG*X
      FG=(BG1*GE)/.00319
      NA=1
      K=1
      X=BT1
      GO TO 802
  803 FT=AT*HS
      NA=1
      K=2
      X=BC1
      GO TO 802
  804 FC=AT*ALCR
      PL7=(FT+FG+FC)*P7*.001
      IF(1.1*PL71-PL7)810,811,811
  811 IF(.9*PL71-PL7)812,812,810
  810 PL71=PL7
      GO TO 801
  812 Z1=(.002*(FG+FC+FT))*(P1+P2+P3+P4)
      FQ=PP1
      Z=FQ/PX
      Y=Z1/PX+FQ
```

```
      BNP=Y/ANP
      BSP=Y/(2.*ASP)
      NA=61
      K=3
      X=BNP
      GO TO 802
  805 FNP=HNP*AT
      NA=31
      K=4
      X=BSP
      GO TO 802
  806 IF(BNE-BNM)820,821,820
  820 AXX=PSL/2.
      GO TO 822
  821 AXX=PSL/3.
  822 FSP=AXX*AT
      PG2=(FQ*PX+Z1+PL7)/4.
      BG2=PG2/A2
      FG2=BG2*GP/.00319
      BY4=PG2/AY4
      K=5
      NA=61
      X=BY4
      GO TO 802
  807 FY4=AT*Y4
      Z2=2.*(FG+FC+FT)
      Z3=Z2+FSP+FG2
      PL5=(Z3+FNP)*P5*.001
  816 BNP=(((Z1+PL7+PL5)/PX)+FQ)/ANP
```

```
      K=6
      NA=61
      X=BNP
      GO TO 802
808   FNP=HNP*AT
      PL51=(Z3+FNP)*P5*.001
      IF(1.1*PL5-PL51)813,814,814
814   IF(.9*PL5-PL51)815,815,813
813   PL5=PL51
      GO TO 816
815   BG3=(FQ*PX+(Z1+PL7+PL5))/(4.*A3)
      FG3=BG3*G4/.00319
      PL6=(Z2+FSP+FNP+FY4+FG3)*P6*.001
      BG2=(FQ*PX+Z1+PL7+PL6)/(4.*A2)
      FG2=BG2*GP/.00319
      BY2=(FQ*PX+Z1+PL7+PL5)/(4.*AY2)
      X=BY2
      K=7
      NA=91
      GO TO 802
809   FY2=YH*AT/3.
      FNL=Z2+FNP+FSP+FG2+FY2+FG3+FY4
      PRINT977,BX,BG1,BG2,BG3,BC1,BT1
899   PRINT979,BY2,BSP,BNP,BY4,FQ,FNL
         PAUSE
802   IF(AI(NA)-X)830,831,831
831   NA=NA+3
835   IF(AI(NA)-X)833,834,834
833   NA=NA+2
```

```
      GO TO 835
  834 A=AI(NA)
      BB1=AI(NA-2)
      DC=AI(NA+1)
      D=AI(NA-1)
      XX=(A-BB1)/(.4343*(LOG(DC)-LOG(D+.0001)))
      Y=A-XX*.4343*LOG(DC)
         AT=EXP(2.306*(X-Y)/XX)
      GO TO (838,839),LOAD
  838 GO TO (803,804,805,806,807,808,809),K
  830 GO TO (836,837),LOAD
  836 PRINT 850,
  850 FORMAT (17HMACHINE SATURATED)
      PAUSE
      END
```

SUPPLEMENT TO DESIGN MANUAL FOR PERMEANCE CALCULATIONS

Permeance (P) is the property of a magnetic circuit, or any part of a circuit, which determines the total flux corresponding to a given mmf as indicated in the expression -

$$\emptyset = F\,P = \text{mmf x permeance}$$

From "Standard Handbook for Electrical Engineers" A. E. Knowlton, 7th edition, McGraw-Hill, Section 4-310.

Magnetic Permeability (μ) is that property of an isotropic medium which determines under specified conditions, the magnitude relation between magnetic induction and magnetizing force in the medium usually expressed -

$$\mu - \frac{B}{H}$$

Same reference Section 4-308.

For air $\mu = 3.19 \dfrac{\text{Flux Line/inch}^2}{\text{Ampère Turns/inch}}$

The following formulas are from Roter's "Electromagnetic Devices".

Parallel planes of infinite extent

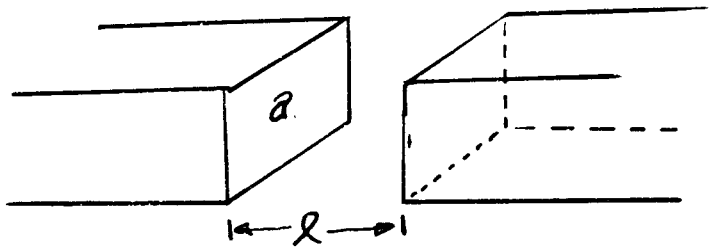

$$P = \mu \, a/\ell$$

where a = area

ℓ = length of flux path

NON-PARALLEL PLANES OF INFINITE EXTENT

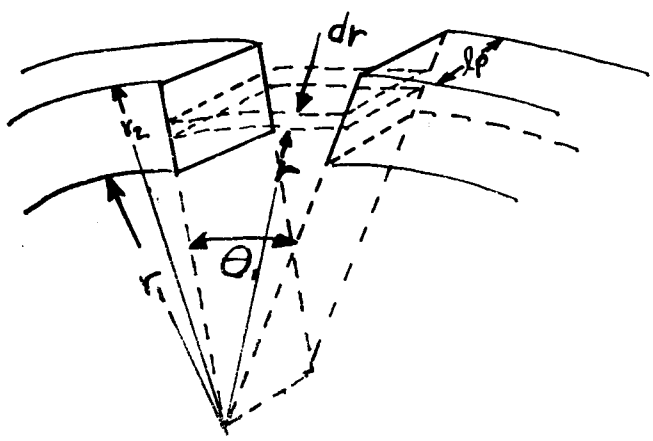

$$dP = \frac{\mu \ell_p \, dr}{\theta r}$$

$$P = \frac{\mu \ell_p}{\theta} \int_{r_1}^{r_2} \frac{dr}{r}$$

$$P = \frac{\mu \ell_p}{\theta} \ln \frac{r_2}{r_1}$$

Special formulas for use in estimating permeances of flux paths.

SEMI-CIRCULAR CYLINDRICAL VOLUME

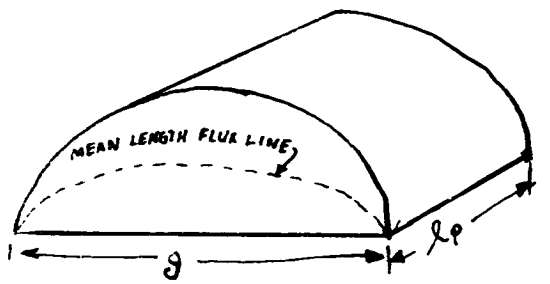

Mean length of flux line has been found by graphical measurement to be 1.22 g.

Mean area of flux path found by dividing the entire volume by mean length of flux path is,

$$\text{Mean area} = \frac{\pi g^2 l_p}{8} \times \frac{1}{1.22\ g} = 0.322\ g\, l_p$$

$$P = \frac{\mu a}{l} = \frac{0.322\ \mu\ g\ l_p}{1.22\ g} = 0.26\ \mu\ l_p$$

HALF ANNULUS

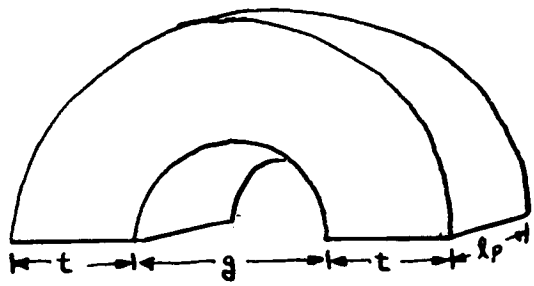

NOTE: IN THE COMPUTER DESIGN MANUAL THE SYMBOL g WAS CHANGED TO z TO AVOID CONFUSION WITH g (AIR GAP)

Assume the mean length of the flux path to be $\pi(\frac{g+t}{2})$ and the average area of the path to be $t\ell_p$ then

$$P = \frac{ua}{\ell} = \frac{2ut\ell_p}{\pi(g+t)} = 0.64 \frac{u\ell_p}{\left(\frac{g}{t}+1\right)}$$

WHEN $g < 3t$ $\quad P = \frac{u\ell_p}{\pi} \ln \left(1+\frac{2t}{g}\right)$

SPHERICAL QUADRANT

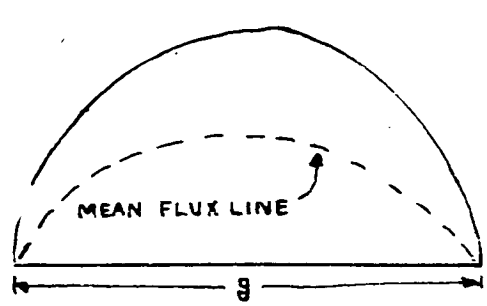

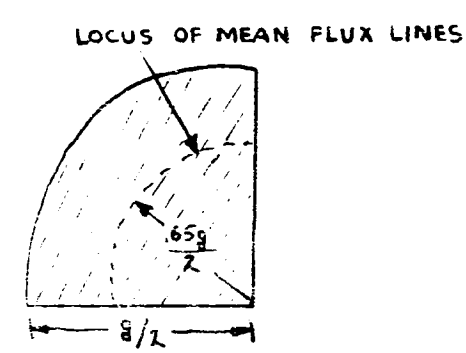

By graphical measurement, the mean flux line is 1.3 g. Volume of quadrant is $1/3\,\pi\left(\frac{g}{2}\right)^3$, hence mean area of flux path is -

$$\frac{\frac{1}{3}\pi\left(\frac{g}{2}\right)^3}{1.3\,g} = 0.1\,g^2$$

and the permeance is

$$P = \frac{\mu a}{\ell} = \frac{0.1\,g^2\,\mu}{1.3\,g} = 0.077\,\mu g$$

QUADRANT OF SPHERICAL SHELL

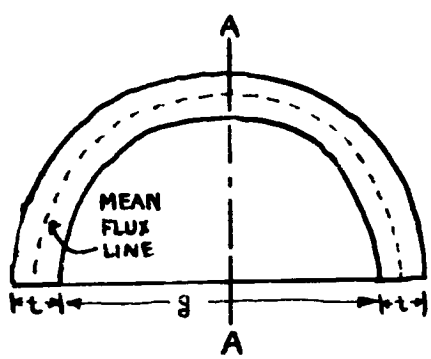

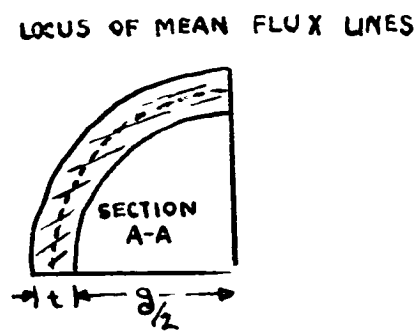

Mean length of flux path is $\frac{\pi}{2}\,(t + g)$

Maximum area of flux path is -

$$\frac{\pi\left(\frac{g}{2} + t\right)^2}{4} - \frac{\pi g^2}{16} = \frac{\pi}{4}\,(t^2 + tg)$$

Average area of path is considered to be -

$$\frac{\pi}{8}\,t(t+g) \text{ and } P = \frac{\mu a}{\ell} = \frac{\mu\frac{\pi}{8}\,t\,(t+g)}{\frac{\pi}{2}\,(t+g)} = \frac{\mu t}{4}$$

Right prism and plane of infinite extent parallel to end of prism.

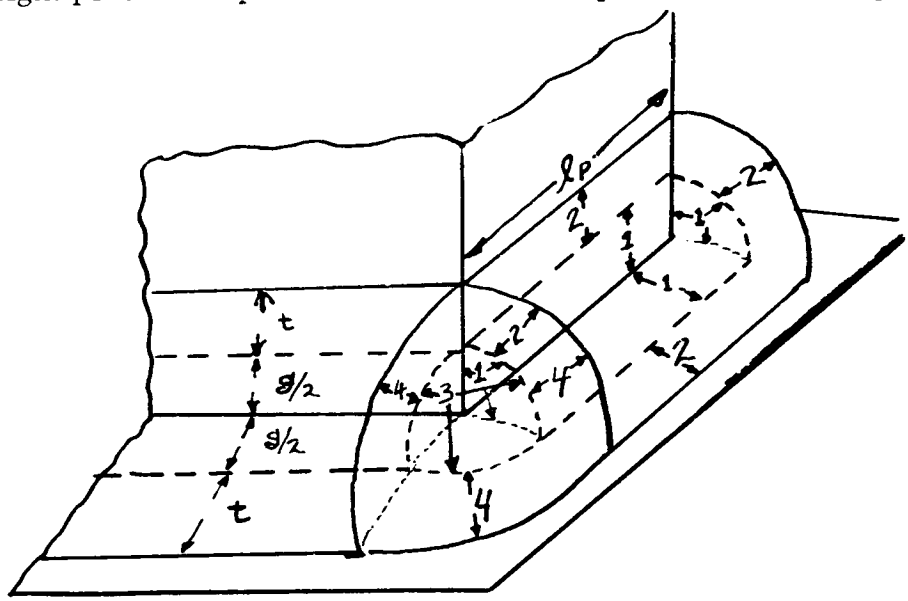

Simplified flux paths are designated 1, 2, 3, 4.

Path 1 --- This path is 1/2 of the semi-circular cylinder so permeance is twice as great.

$$P = 0.52\, \mu \ell$$

Path 2 --- This path is one half of a half annulus so permeance is twice as great.

$$P = \frac{1.28\, \mu\, \ell_p}{\left(\frac{g}{t} + 1\right)}$$

when $g < 3\,t$

$$P = \frac{2\, \mu \ell_p}{\pi} \ln\left(1 + \frac{2t}{g}\right)$$

Path 3 --- This path is 1/2 of a spherical quadrant

$$P = 0.154\, \mu g$$

Path 4 --- This path is 1/2 quadrant of a spherical shell

$$P = 0.5\, \mu t$$

TWO-COIL OUTSIDE-COIL LUNDELL

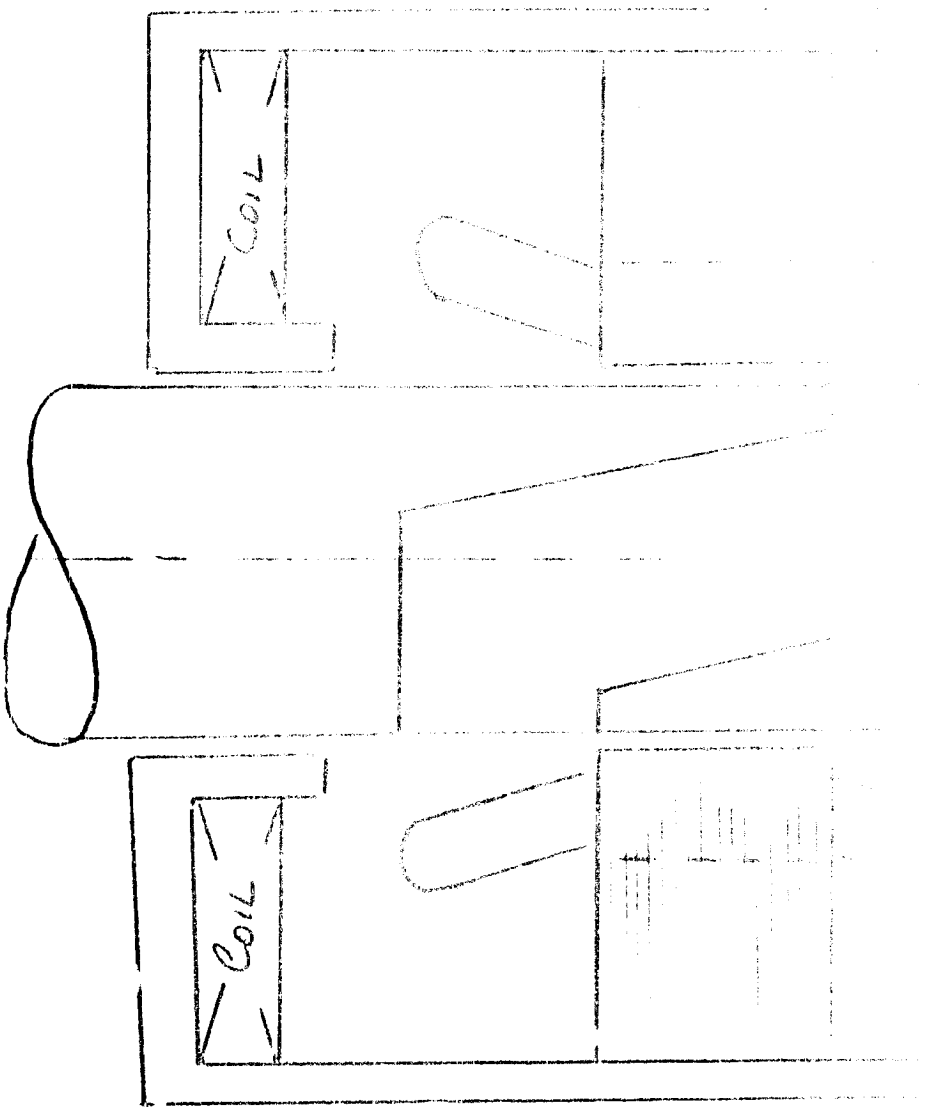

THE TWO-COIL, OUTSIDE-COIL LUNDELL GENERATOR

The two-coil, outside-coil Lundell generator is no younger than 67 years old and may be a little older than that. Around 1900, the type of generator illustrated by the Rice patent of 1897 was built by at least the Stanley Manufacturing Company in large ratings. These machines were driven by steam engines in central station power plants.

Though the two-coil, outside-coil Lundell generator is used in Russia and Germany in railway service, it was obsoleted for most uses by the wound-rotor generators. It is now again of interest for applications that cannot be satisfied by the wound-pole machines.

The rotor of this generator is short and can be made as a solid weldment for maximum strength and stiffness. Laminating the pole surfaces would be difficult and the limit to the output of most designs of this machine will be due to pole-face heating.

Because of the promise of this generator configuration, this study includes building and testing one machine to check the accuracy of the design manual.

The design parameters of the machine and the tests on it will be reported in the final report.

The two-coil Lundell generators treated here have three possible coil locations but all three are calculated by the same design formulae.

The difference between the designs is in the leakage permeance paths from the stator to the housing.

Design C shown on the following sheet has the largest leakage permeance from stator to housing but is sometimes used because it has the lowest overall length and can be used with a shorter stiffer rotor when gas bearings are necessary.

The leakage flux, $\emptyset_7$ in the symmetrical, two-coil Lundell generator, leaks from the core area of the stator through the field coils to the yoke, end-bells, flux shoes, and to the rotor. This flux does not cross the main air gap. The leakage flux into the stator from one side is equal to the leakage flux out of the stator on the other side. This flux does not add to the stator saturation by a significant amount. The leakage fluxes and the main stator flux cross at right angles and add vectorially.

The design manual has been arranged as a computer program and the sequence of calculations results from storage limitations of the smaller computers (1620).

A number is assigned to a symbol and maintained throughout all of the manuals presented in this Quarterly Report. Where the symbol is not used in a particular manual, the symbol and corresponding number are omitted entirely from the manual.

The symbol number in brackets wherever found means the symbol and not the value of the number itself. Numbers without brackets are numerical values.

A symbol list with corresponding design manual calculation numbers, Fortran program symbols and the definition of the symbols is given at the beginning of the manual.

The design equations in the manual are written with symbols and are repeated with the bracketed numbers that locate the symbol definition in the symbol list.

Following the design equations, the Fortran program is published with the same identifying equation numbers found in the design manual.

(No Model.) 2 Sheets—Sheet 2.

L. C. RICE.

DYNAMO ELECTRIC MACHINE.

No. 588,602. Patented Aug. 24, 1897.

Fig. 5

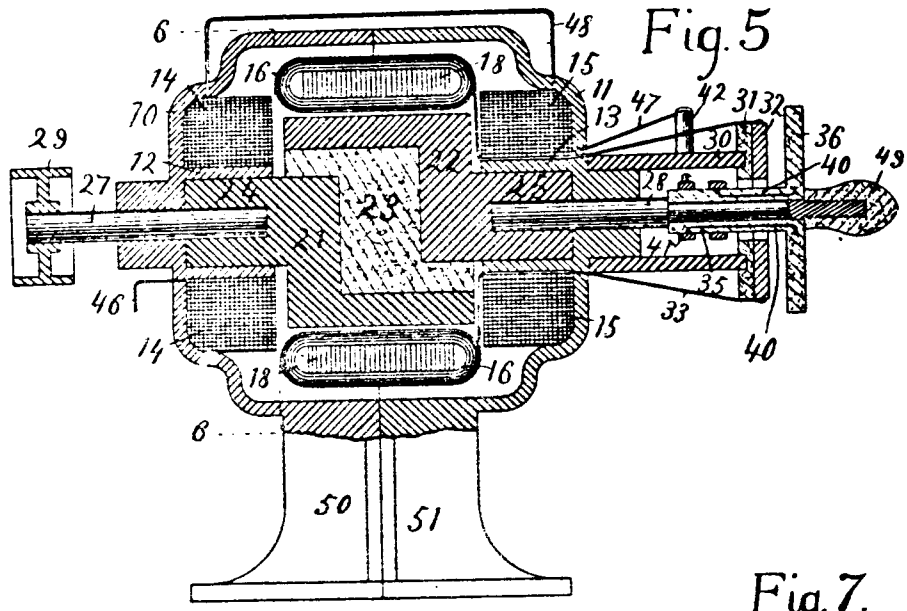

Fig. 6.

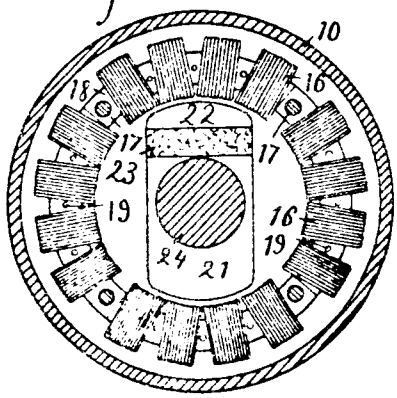

Fig. 7.

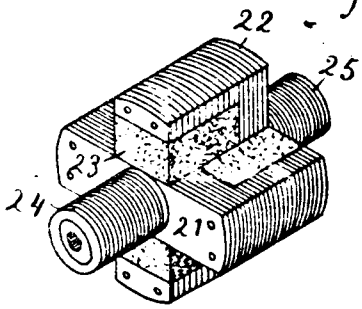

Fig. 8.

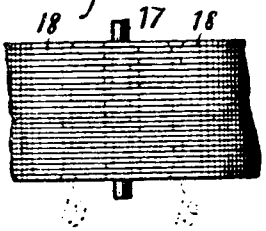

Witnesses
W. C. Alexander.
E. E. Kimball

Inventor
Lewis C. Rice

By Attorneys
Fowler & Fowler

P_7 = Stator Leakage Permeances

Design A

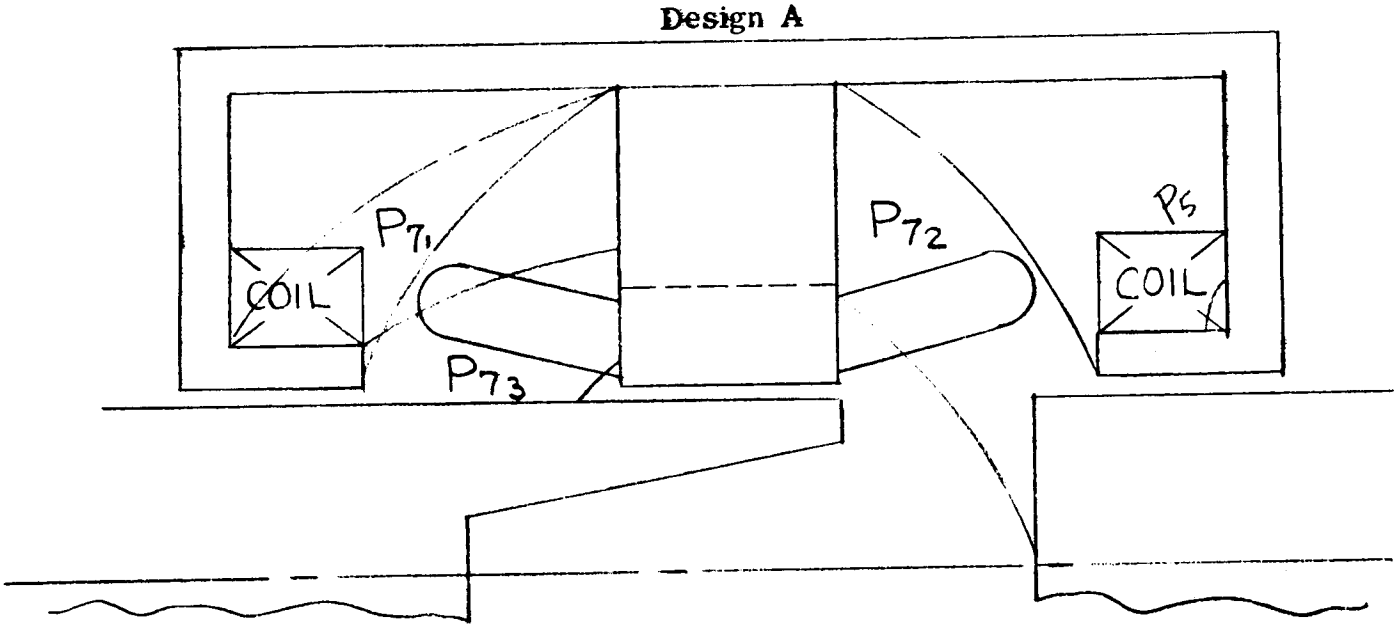

Design B

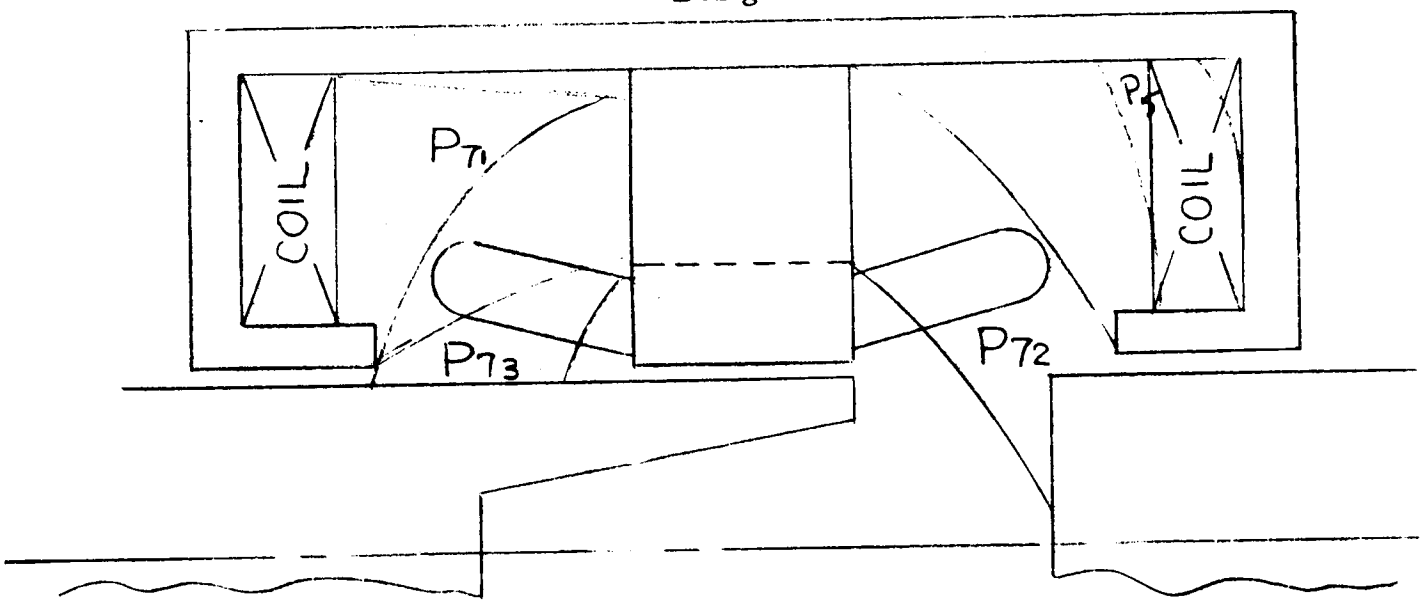

Design C

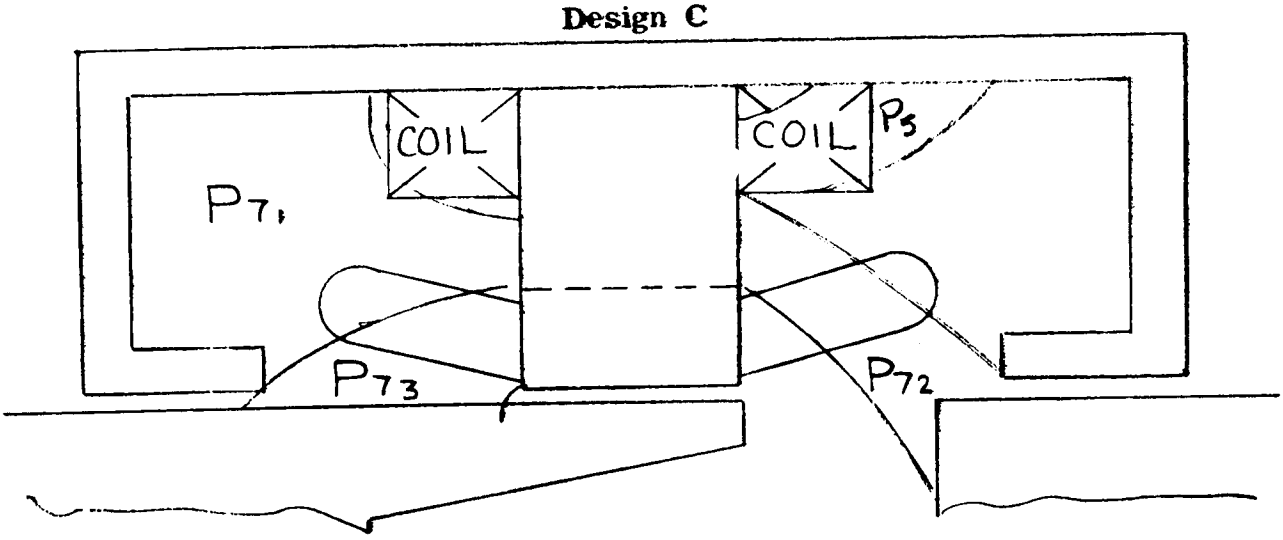

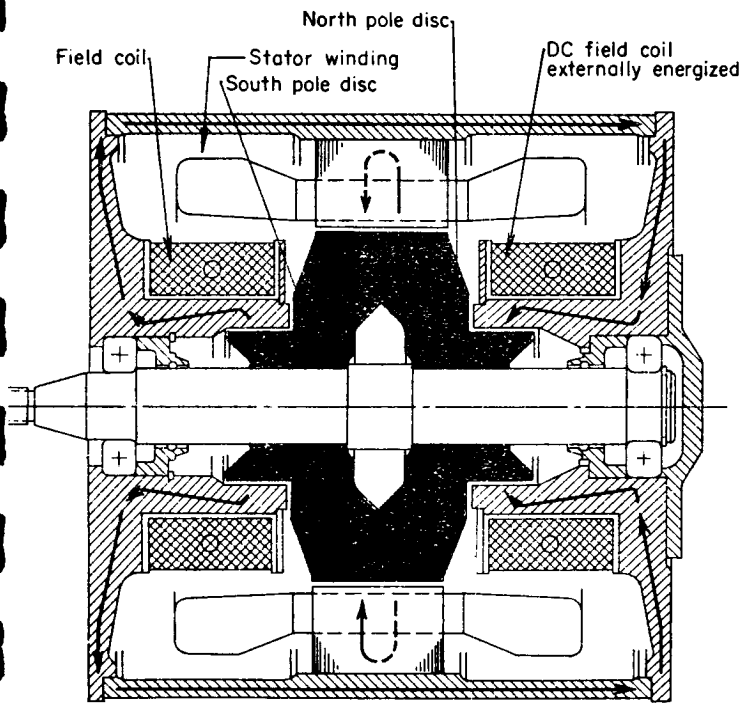

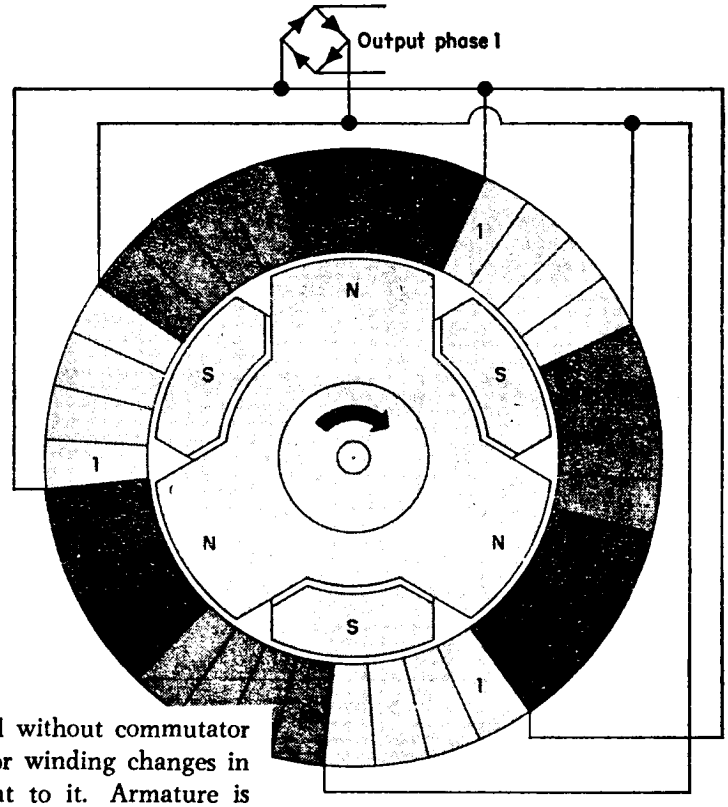

Reversing flux field produces alternating current in a coil without commutator or slip rings. Polarity of the field passing through any stator winding changes in response to the armature pole that is momentarily adjacent to it. Armature is composed of two discs with interlocking poles—all north on one disc and all south on the other. Stationary field windings are inside the ends of the stator windings. There is no moving armature winding. Principle used in a railroad coach alternator by Siemens-Schuckertwerke, Erlangen, Germany.

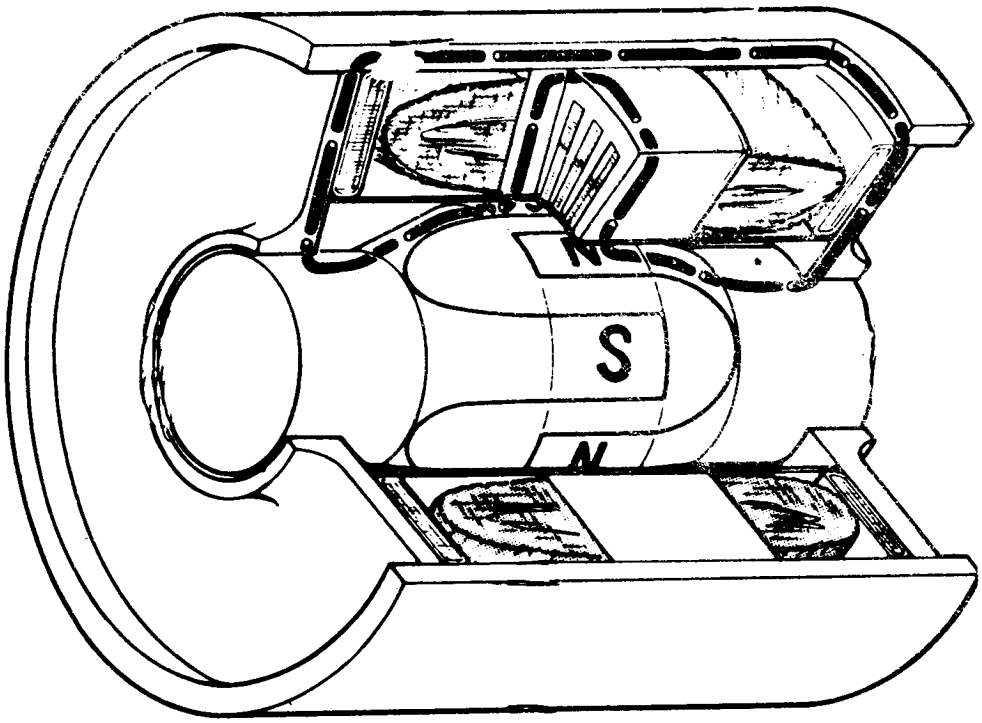

Two-Outside-Coil Lundell

The two-outside coil Lundell has a symmetrical flux circuit. The poles are identical and leakage conditions on both sides of the stator are the same.

The flux circuit look s like this:

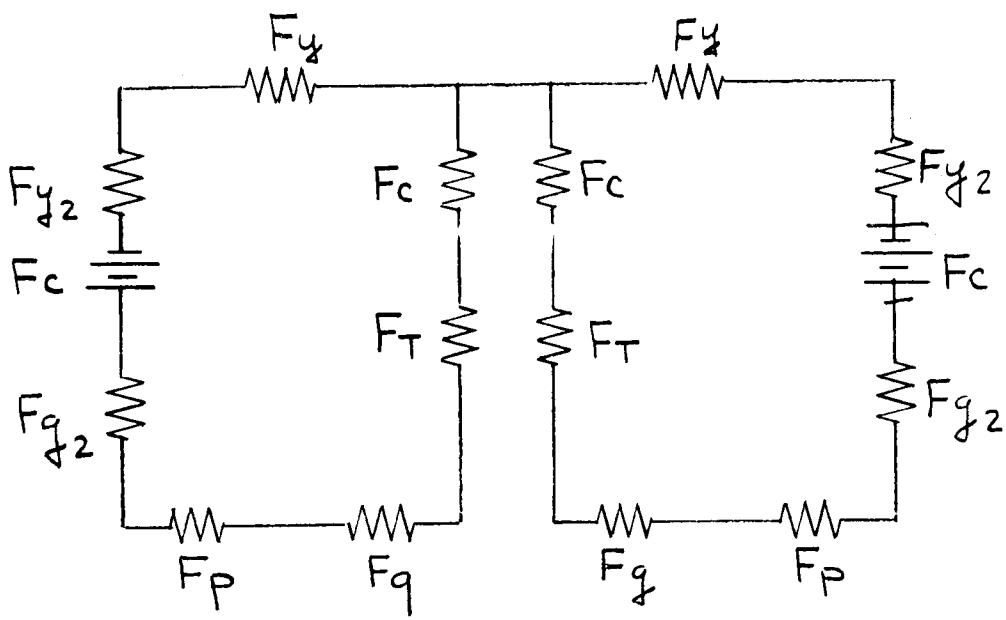

The flux leakage paths are simplified slightly for ease in calculating by assuming that the F_{g2} is negligible and that F_{y2} & F_y are also negligible.

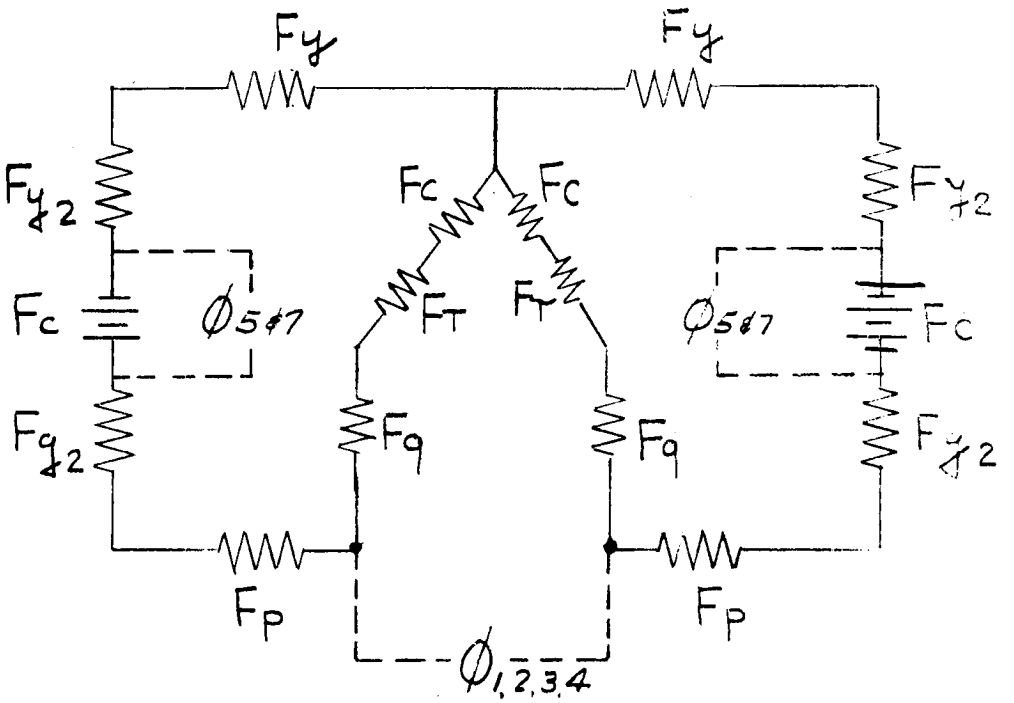

Now there are only two leakage paths: (1) From pole-to-pole and (2) Around the field coil.

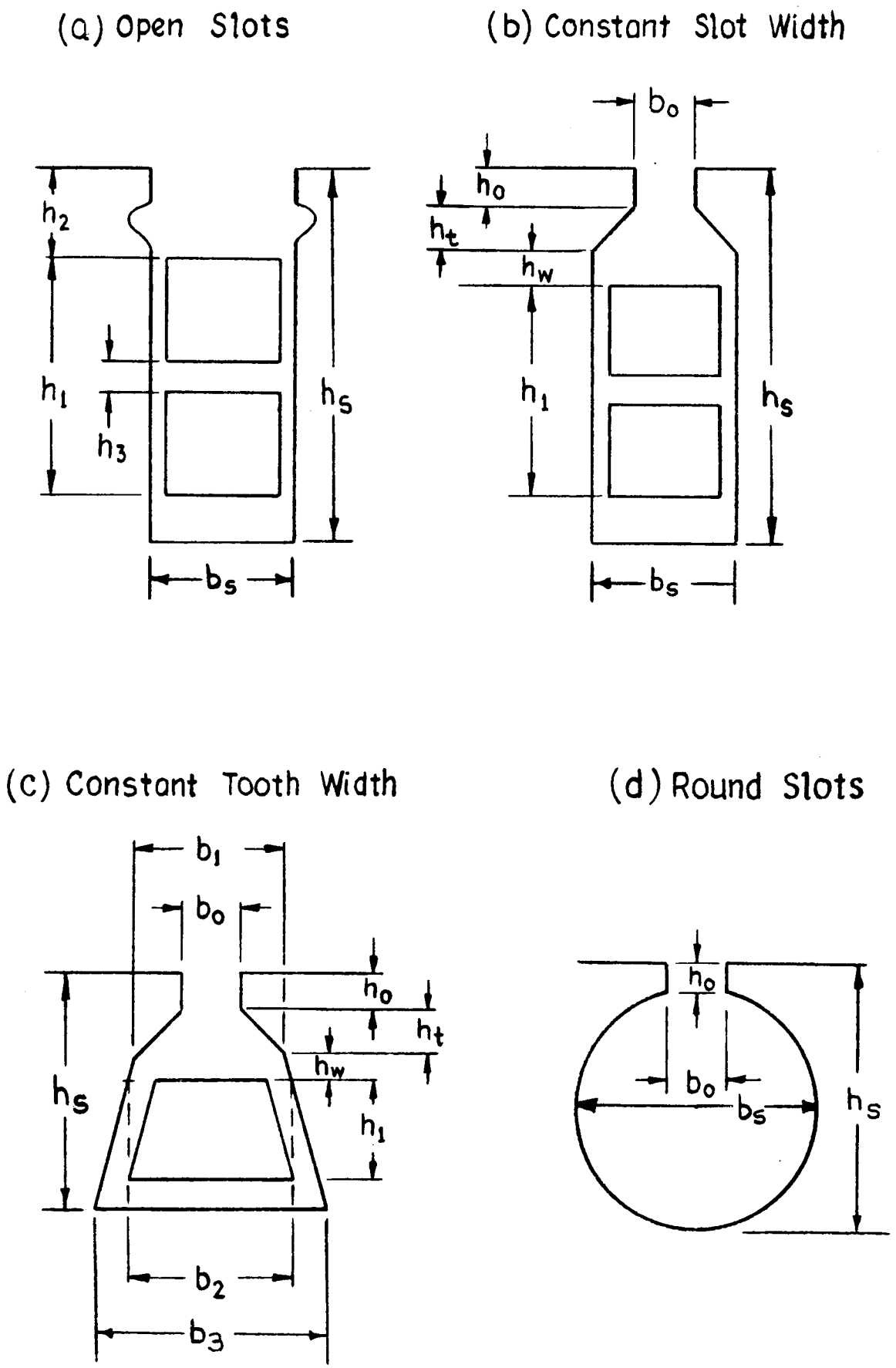
(a) Open Slots
(b) Constant Slot Width
(c) Constant Tooth Width
(d) Round Slots
h_2
h_1
h_3
h_s
b_s
b_o
h_o
h_t
h_w
b_1
b_2
b_3

FIG 1

TABLE - 1

CHORD FACTORS K_p FOR HARMONICS AT DIFFERENT PITCHES

q														y/mg																									
1	3/3																																2/3						
2	6/6																5/6																4/6						
3	9/9											8/9										7/9											6/9						
4	12/12								11/12								10/12								9/12								8/12						7/12
5	15/15						14/15							13/15						12/15							11/15						10/15				9/15		
6	18/18					17/18						16/18					15/18					14/18						13/18					12/18						
7	21/21				20/21					19/21					18/21				17/21					16/21					15/21				14/21						
8	24/24			23/24					22/24				21/24				20/24				19/24				18/24					17/24			16/24			15/24			14/24
9	27/27		26/27					25/27				24/27				23/27		22/27				21/27				20/27					19/27		18/27		17/27			16/27	
10	30/30	29/30					28/30				27/30			26/30			25/30			24/30			23/30				22/30					21/30	20/30	19/30			18/30		
y/mg	1.0	.967	.964	959	952	945	934	926	917	905	906	889	875	867	857	852	833	815	810	800	792	779	767	762	750	741	734	722	712	709	705	700	667	634	630	.625	600	592	584
1	1.0	999	998	998	997	996	995	993	991	989	988	985	981	978	975	973	966	958	956	951	947	940	934	931	924	918	914	906	901	897	894	891	866	839	835	831	809	800	793
3	1.0	988	985	981	975	966	951	940	924	901	891	865	831	809	782	766	707	643	623	588	556	500	454	434	383	342	309	259	222	195	174	156	0.0	156	174	195	309	342	383
5	1.0	966	958	947	931	906	866	835	793	733	707	643	556	500	434	396	259	116	075	0.0	065	174	259	295	383	447	500	574	623	660	690	707	866	966	974	982	1.0	998	993
7	1.0	943	918	897	866	819	743	686	609	500	454	342	177	105	0.0	058	259	449	500	588	659	766	839	866	924	958	978	996	1.0	998	993	988	866	629	588	559	309	225	139
9	1.0	897	866	831	782	707	588	500	383	223	156	0.0	191	304	434	500	707	866	901	951	981	1.0	998	975	924	866	804	707	623	556	500	454	0.0	358	407	462	500	755	875
11	1.0	834	802	750	680	574	407	287	131	075	156	342	556	660	782	795	966	998	989	951	897	766	629	583	383	231	105	087	222	321	396	454	866	999	994	981	809	721	618
13	1.0	777	727	659	563	423	208	058	131	365	454	643	831	914	975	993	966	802	733	588	442	174	052	148	383	550	669	818	901	947	973	988	866	371	244	195	309	459	598
15	1.0	707	643	556	434	259	0.0	174	383	624	707	866	981	1.0	975	940	707	342	223	0.0	195	500	707	782	924	981	1.0	966	907	831	766	707	0.0	696	760	831	1.0	982	930
17	1.0	629	550	442	295	087	208	346	609	826	891	985	981	914	782	686	259	231	365	588	752	940	999	997	924	802	669	423	222	065	058	156	866	940	898	831	309	100	113
19	1.0	545	449	321	149	087	407	597	793	956	986	985	831	669	434	287	259	727	826	951	998	940	777	680	363	116	105	423	623	752	835	891	866	072	047	194	809	952	989
21	1.0	454	342	195	0.0	259	588	766	924	1.0	988	866	556	309	0.0	174	707	985	1.0	951	831	500	156	0.0	383	643	804	966	1.0	981	940	891	0.0	881	935	981	809	628	402
23	1.0	358	231	064	149	423	743	894	991	956	891	643	195	105	434	597	966	918	826	588	321	174	545	680	924	998	978	819	623	442	287	156	866	792	696	555	309	566	778
25	1.0	259	116	064	295	574	866	973	991	826	707	342	195	500	782	894	966	550	365	0.0	321	766	966	997	924	727	500	087	222	442	597	707	866	061	383	555	1.0	951	809
27	1.0	170	0.0	195	434	707	951	1.0	924	624	454	0.0	556	809	975	1.0	707	0.0	223	558	831	1.0	897	782	383	0.0	305	707	901	981	1.0	988	0.0	983	1.0	981	309	025	356
29	1.0	052	116	321	563	819	995	973	793	365	156	342	831	978	975	894	259	550	733	951	998	766	358	148	383	727	914	996	901	752	597	454	866	569	412	194	809	965	995
31	1.0	052	231	442	680	906	995	894	109	075	156	643	981	978	782	597	259	918	989	951	752	174	358	583	924	998	914	574	222	065	287	454	866	517	673	831	809	525	162
33	1.0	156	342	556	782	966	951	766	383	223	454	866	981	809	434	174	707	985	901	588	195	500	891	975	924	643	309	259	623	831	940	988	0.0	992	946	831	309	666	910
35	1.0	259	449	659	866	996	866	597	131	500	707	985	831	500	0.0	287	966	727	500	0.0	442	940	966	866	383	116	500	906	1.0	947	835	707	866	294	079	194	1.0	905	637
37	1.0	358	550	750	931	996	743	396	131	793	891	985	556	105	434	686	966	231	075	588	897	940	545	295	383	802	978	906	623	321	058	156	866	855	884	981	309	150	577
39	1.0	454	643	831	975	[illegible]	588	174	383	901	988	866	195	309	782	940	707	342	623	951	981	500	156	434	924	985	809	259	222	556	766	891	0.0	909	780	555	805	990	939
41	1.0	545	727	841	997	906	407	058	609	989	988	643	195	669	975	933	259	802	956	951	659	174	777	931	924	550	105	574	901	998	973	891	866	010	264	555	809	414	088
43	1.0	629	802	947	997	819	208	287	793	989	891	342	556	914	975	795	259	998	956	588	065	766	999	931	383	231	669	996	901	660	346	156	866	916	990	981	309	754	984
45	1.0	707	866	987	925	707	0.0	500	924	901	707	0.0	831	1.0	782	500	707	866	623	0.0	556	1.0	707	434	383	866	1.0	707	222	145	500	707	0.0	739	523	194	1.0	844	262
47	1.0	777	918	998	931	574	208	686	991	733	454	342	981	914	434	058	966	449	075	588	947	766	052	295	924	958	669	087	623	897	993	988	866	312	575	831	305	273	762
49	1.0	839	958	998	866	423	407	835	991	500	156	643	981	669	0.0	396	966	116	500	951	947	174	629	866	224	597	105	819	1.0	897	690	454	866	994	979	831	809	1.0	823
51	1.0	891	985	981	782	259	588	940	924	223	156	866	831	309	434	766	707	643	901	951	556	500	988	975	383	342	809	966	623	195	174	454	0.0	501	203	194	805	297	333
53	1.0	934	998	947	680	087	743	993	793	075	454	985	556	105	782	973	259	958	989	588	065	940	839	583	383	918	978	423	222	660	894	988	866	585	818	981	309	721	997
55	1.0	966	998	897	563	087	866	993	605	365	707	985	195	500	975	973	259	958	733	0.0	659	940	259	148	924	918	500	423	901	998	894	707	866	979	853	555	1.0	771	187
57	1.0	988	985	831	434	255	951	940	383	624	891	866	195	809	975	766	707	643	223	588	981	500	454	782	924	342	309	966	901	556	174	156	0.0	215	141	555	309	407	899
59	1.0	999	958	756	295	423	995	835	131	826	988	643	556	978	782	396	966	116	365	951	897	174	934	997	383	597	914	819	222	321	690	891	866	863	965	981	809	994	777
61	1.0	999	978	659	149	574	995	686	131	956	988	342	831	978	434	058	966	449	826	951	442	766	934	680	383	958	914	087	623	947	993	891	866	872	625	194	809	175	557
63	1.0	988	866	556	0.0	707	051	500	383	1.0	891	0.0	981	809	0.0	500	707	866	1.0	588	195	1.0	454	0.0	924	866	309	707	1.0	831	500	156	0.0	091	468	831	309	894	947
65	1.0	966	802	442	149	814	866	287	609	956	707	342	981	500	434	795	259	998	826	0.0	752	765	259	680	924	231	500	996	623	065	396	707	866	946	497	831	1.0	689	063

VALUES OF K_{dn} FOR INTEGRAL-SLOT, 3ϕ WINDINGS - TABLE 2

n	K_{dn} - HARMONIC DISTRIBUTION FACTORS									
q=	2	3	4	5	6	7	8	9	10	∞
1	.966	.960	.958	.957	.957	.957	.956	.955	.955	.955
3	.707	.667	.654	.646	.644	.642	.641	.640	.639	.636
5	.259	.217	.205	.200	.197	.195	.194	.194	.193	.191
7	-.259	-.177	-.158	-.149	-.145	-.143	-.141	-.140	-.140	-.136
9	-.707	-.333	-.270	-.247	-.236	-.229	-.225	-.222	-.220	-.212
11	-.966	-.177	-.126	-.110	-.102	-.097	-.095	-.093	-.092	-.087
13	-.966	.217	.126	.102	.092	.086	.083	.081	.079	.073
15	-.707	.667	.270	.200	.172	.158	.150	.145	.141	.127
17	-.259	.960	.158	.102	.084	.075	.070	.066	.064	.056
19	.259	.960	-.205	-.110	-.084	-.072	-.066	-.062	-.060	-.059
21	.707	.667	-.654	-.247	-.172	-.143	-.127	-.118	-.112	-.091
23	.966	.217	-.958	-.149	-.092	-.072	-.063	-.057	-.054	-.041
25	.966	-.177	-.958	.200	.102	.075	.063	.056	.052	.038
27	.707	-.333	-.654	.646	.236	.158	.127	.111	.101	.071
29	.259	-.177	-.205	.957	.145	.086	.066	.056	.050	.033
31	-.259	.217	.158	.957	-.197	-.097	-.070	-.057	-.050	-.031
33	-.709	.667	.270	.646	-.644	-.229	-.150	-.118	-.101	-.058
35	-.966	.960	.126	.200	-.957	-.143	-.083	-.062	-.052	-.027
37	-.966	.960	-.126	-.149	-.957	.195	.095	.066	.054	.026
39	-.707	.667	-.270	-.247	-.644	.642	.225	.145	.112	.049
41	-.259	.217	-.158	-.110	-.197	.957	.141	.081	-.060	.023
43	.259	-.177	.205	.102	.145	.957	-.194	-.093	-.064	-.022
45	.707	-.333	.654	.200	.236	.642	-.641	-.222	-.141	-.042
47	.966	-.177	.958	.102	.102	.195	-.956	-.140	-.079	-.020
49	.966	.217	.958	-.110	-.092	-.143	-.956	.194	.092	.019
51	.707	.667	.654	-.247	-.172	-.229	-.641	.640	.220	.038
53	.259	.960	.205	-.149	-.084	-.097	-.194	.955	.140	.018
55	-.259	.960	-.158	.200	.084	.086	.141	.955	-.193	-.017
57	-.707	.667	-.270	.646	.172	.158	.225	.640	-.639	-.033
59	-.966	.217	-.126	.957	.092	.075	.095	.194	-.955	-.016
61	-.966	-.177	.126	.957	-.102	-.072	-.083	-.140	-.955	.016
63	-.707	-.333	.270	.646	-.236	-.143	-.150	-.222	-.639	.030
65	-.259	-.177	.158	.200	-.145	-.072	-.070	-.093	-.193	.015

ROUND COPPER WIRE TABLE 3

Size AWG	Bare Diameter	Area □"	Ω/1000' @25°C	Single Formvar	Heavy Formvar	Single Glass Formvar	Bare Wt. #/1000'	Single Glass Silicone	Double Glass Silicone
36	.0050	.0000196	424	.0056	.0060		.0757		
35	.0056	.0000246	338	.0062	.0066		.0949		
34	.0063	.0000312	266	.0070	.0074		.1201		
33	.0071	.0000396	210	.0079	.0084		.1526		
32	.0080	.0000503	165	.0088	.0094	.0121	.1937		
31	.0089	.0000622	134	.0097	.0104	.0130	.2398		
30	.0100	.0000785	106	.0108	.0116	.0142	.3025	.0132	.0152
29	.0113	.000100	83.1	.0122	.0130	.0156	.3866	.0145	.0165
28	.0126	.000125	66.4	.0135	.0144	.0169	.4806	.0158	.0178
27	.0142	.000158	52.6	.0152	.0161	.0186	.6101	.0174	.0194
26	.0159	.000199	41.7	.0169	.0179	.0203	.7650	.0191	.0211
25	.0179	.000252	33.0	.0190	.0200	.0224	.970	.0211	.0231
24	.0201	.000317	26.2	.0213	.0223	.0263	1.223	.0251	.0276
23	.0226	.000401	20.7	.0238	.0249	.0289	1.546	.0276	.0301
22	.0254	.000507	16.4	.0266	.0277	.0317	1.937	.0303	.0328
21	.0285	.000638	13.0	.0299	.0310	.0349	2.459	.0335	.0360
20	.0320	.000804	10.3	.0334	.0346	.0384	3.099	.0370	.0395
19	.0360	.00102	8.14	.0374	.0386	.0424	3.900	.0409	.0434
18	.0403	.00126	6.59	.0418	.0431	.0468	4.914	.0453	.0478
17	.0453	.00159	5.22	.0469	.0482	.0519	6.213	.0503	.0528
16	.0508	.00204	4.07	.0524	.0538	.0575	7.812	.0558	.0583
15	.0571	.00255	3.26	.0588	.0602	.0639	9.87	.0621	.0646
14	.0641	.00322	2.58	.0659	.0673	.0710	12.44	.0691	.0716
13	.072	.00407	2.04	.0738	.0753	.0789	15.69	.0770	.0795
12	.0808	.00515	1.61	.0827	.0842	.0877	19.76	.0858	.0883
11	.0907	.00650	1.28	.0927	.0942	.0977	24.90	.0957	.0982
10	.102	.00817	1.02	.1039	.1055	.1089	31.43	.1069	.1094
9	.114	.0102	.814	.1165	.1181	.1225	39.62	.1204	.1254
8	.129	.0131	.634	.1306	.1323	.1366	49.98	.1345	.1395
7	.144	.0163	.510	.1465	.1482	.1525	63.03	.1503	.1553
6	.162	.0206	.403	.1643	.1661	.1703	79.44	.1680	.1730
5	.182	.0260	.319	.1842	.1861	.1902	100.2	.1879	.1929
4	.204	.0327	.254				126.3	.2103	.2153
3	.229	.0412	.202				159.3		
2	.258	.0523	.159				200.9		
0	.325	.0830	.100						
2/0	.365	.105	.0791						
4/0	.460	.166	.0500						

CURVE 1

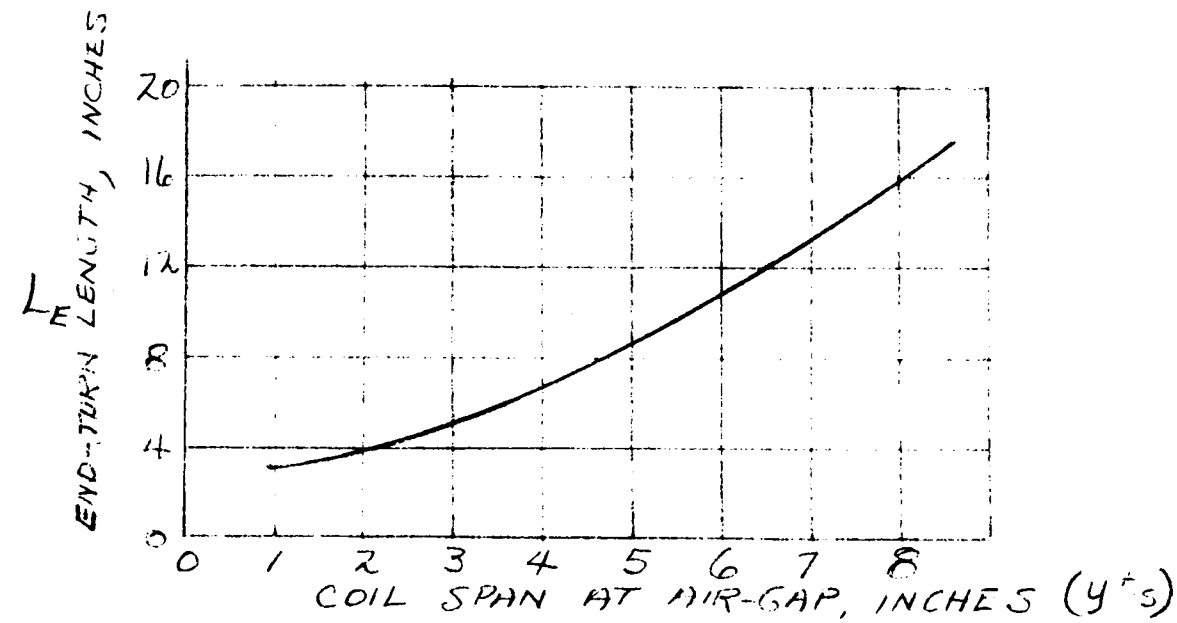

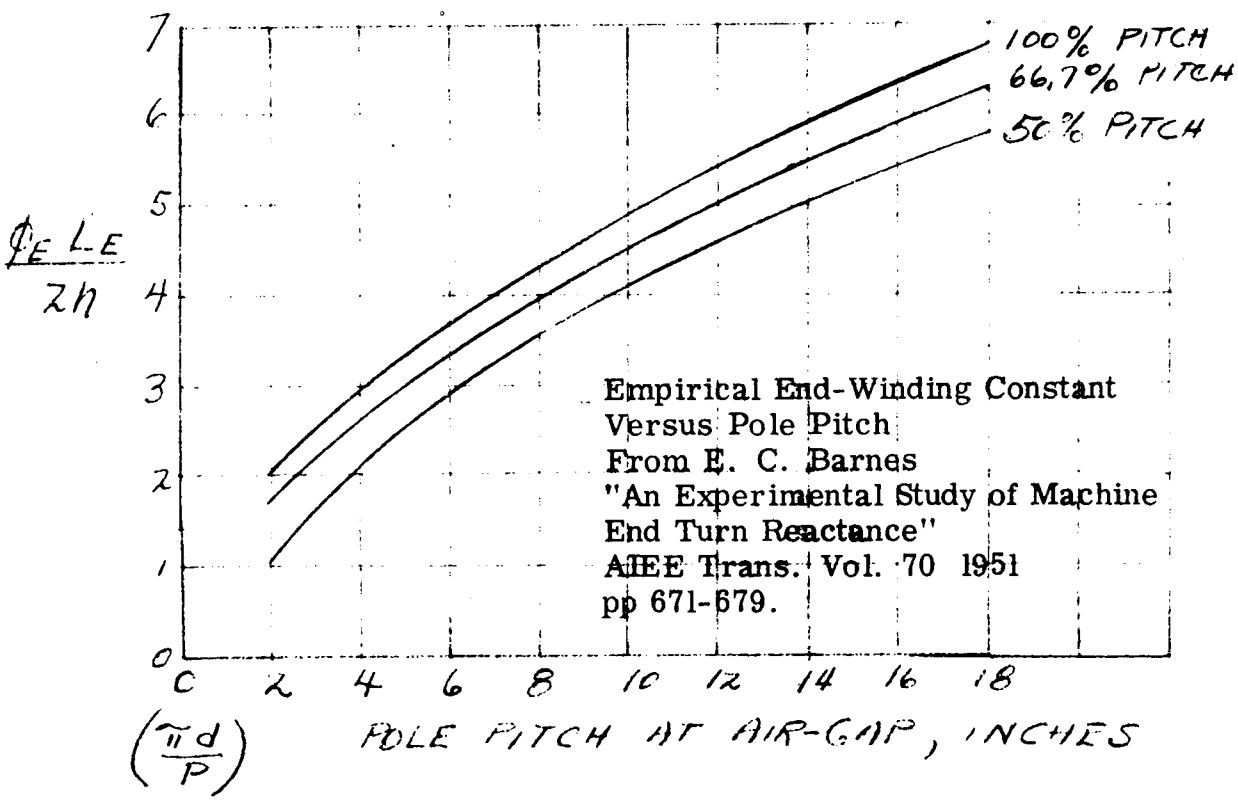

Empirical End-Winding Constant
Versus Pole Pitch
From E. C. Barnes
"An Experimental Study of Machine
End Turn Reactance"
AIEE Trans. Vol. 70 1951
pp 671-679.

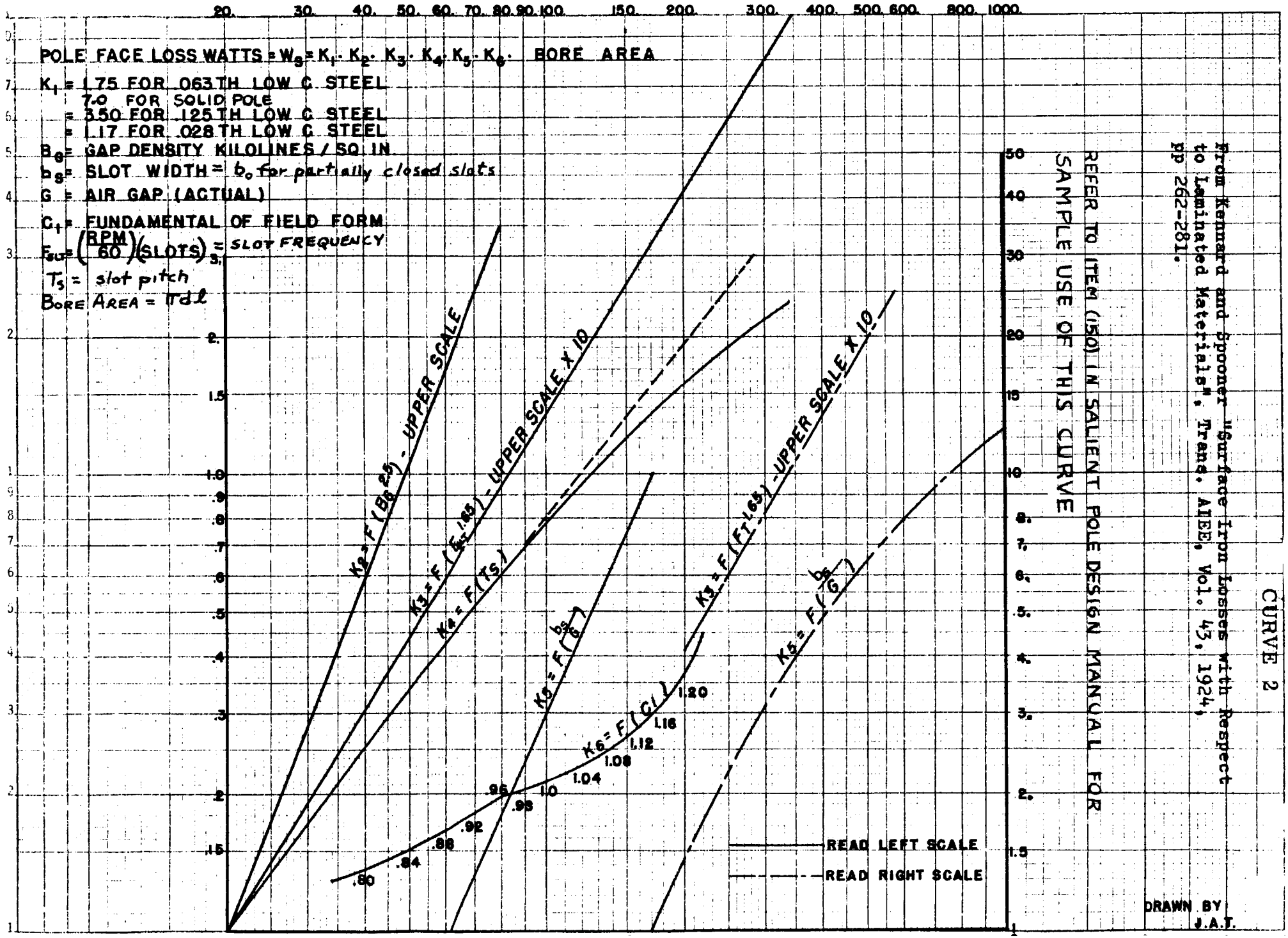
POLE FACE LOSS WATTS = $W_s = K_1 \cdot K_2 \cdot K_3 \cdot K_4 \cdot K_5 \cdot K_6 \cdot$ BORE AREA
K_1 = 1.75 FOR .063TH LOW C. STEEL
7.0 FOR SOLID POLE
= 3.50 FOR .125TH LOW C. STEEL
= 1.17 FOR .028TH LOW C. STEEL
B_g = GAP DENSITY KILOLINES / SQ. IN.
b_s = SLOT WIDTH = b_o for partially closed slots
G = AIR GAP (ACTUAL)
C_1 = FUNDAMENTAL OF FIELD FORM
$F_{SLT} = \left(\frac{RPM}{60}\right)(SLOTS)_s$ = SLOT FREQUENCY
T_s = slot pitch
BORE AREA = $\pi d l$
$K_2 = F(B_g^{2.5})$ - UPPER SCALE
$K_3 = F(F_{SLT}^{1.65})$ - UPPER SCALE X 10
$K_4 = F(T_s)$
$K_5 = F(\frac{b_s}{G})$
$K_6 = F(C_1)$
$K_3 = F(F_{SLT}^{1.65})$ - UPPER SCALE X 10
$K_5 = F(\frac{b_s}{G})$
READ LEFT SCALE
READ RIGHT SCALE
REFER TO ITEM (150) IN SALIENT POLE DESIGN MANUAL FOR SAMPLE USE OF THIS CURVE
From Kennard and Spooner "Surface Iron Losses with Respect to Laminated Materials", Trans. AIEE, Vol. 43, 1924, pp 262-281.
CURVE 2
DRAWN BY J.A.T.

CURVE 3

FROM E. I POLLARD "LOAD LOSSES IN SALIENT POLE SYNCHRONOUS MACHINES" AIEE TRANS VOL. 54 1935 PP 1332-1340

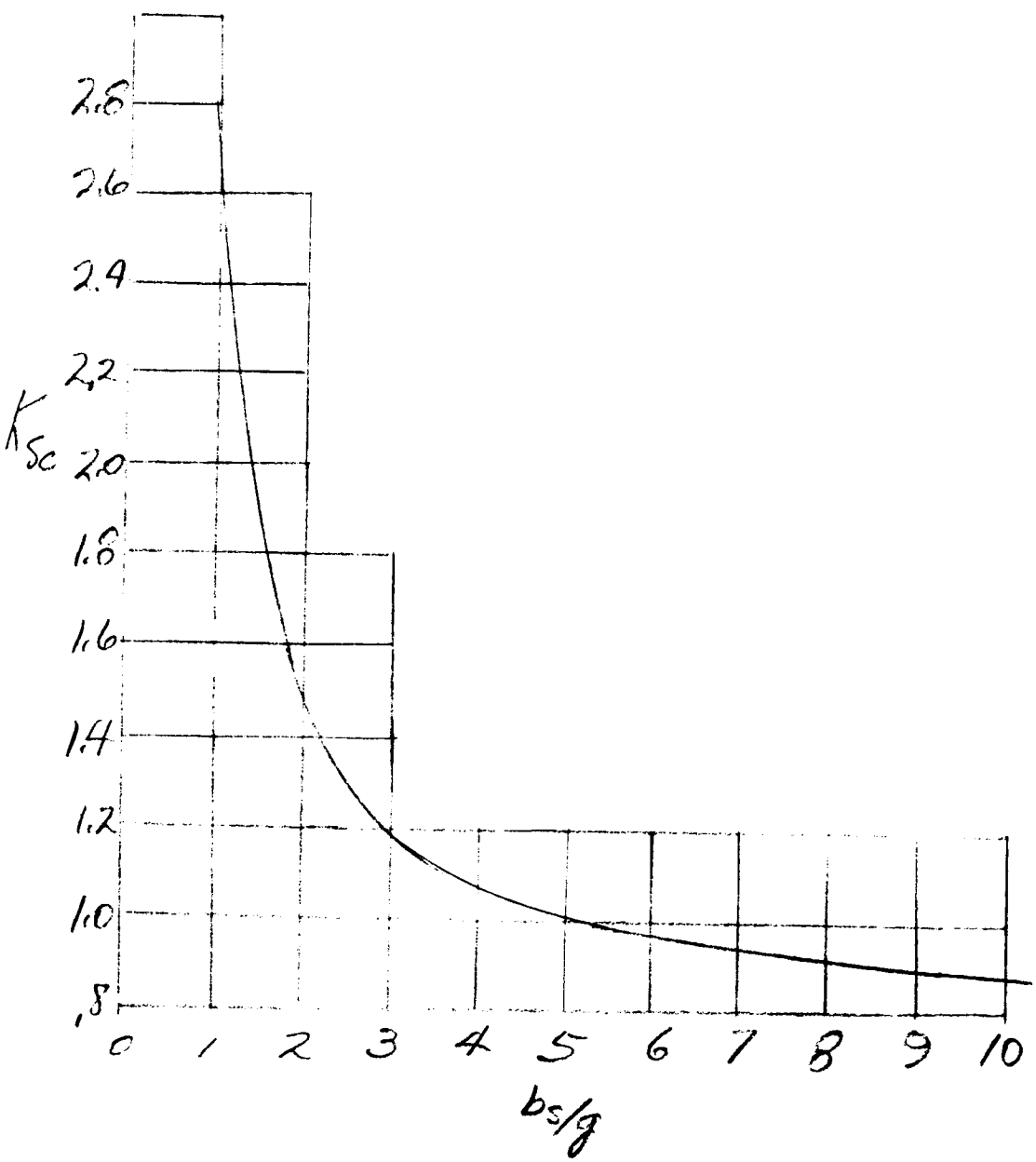

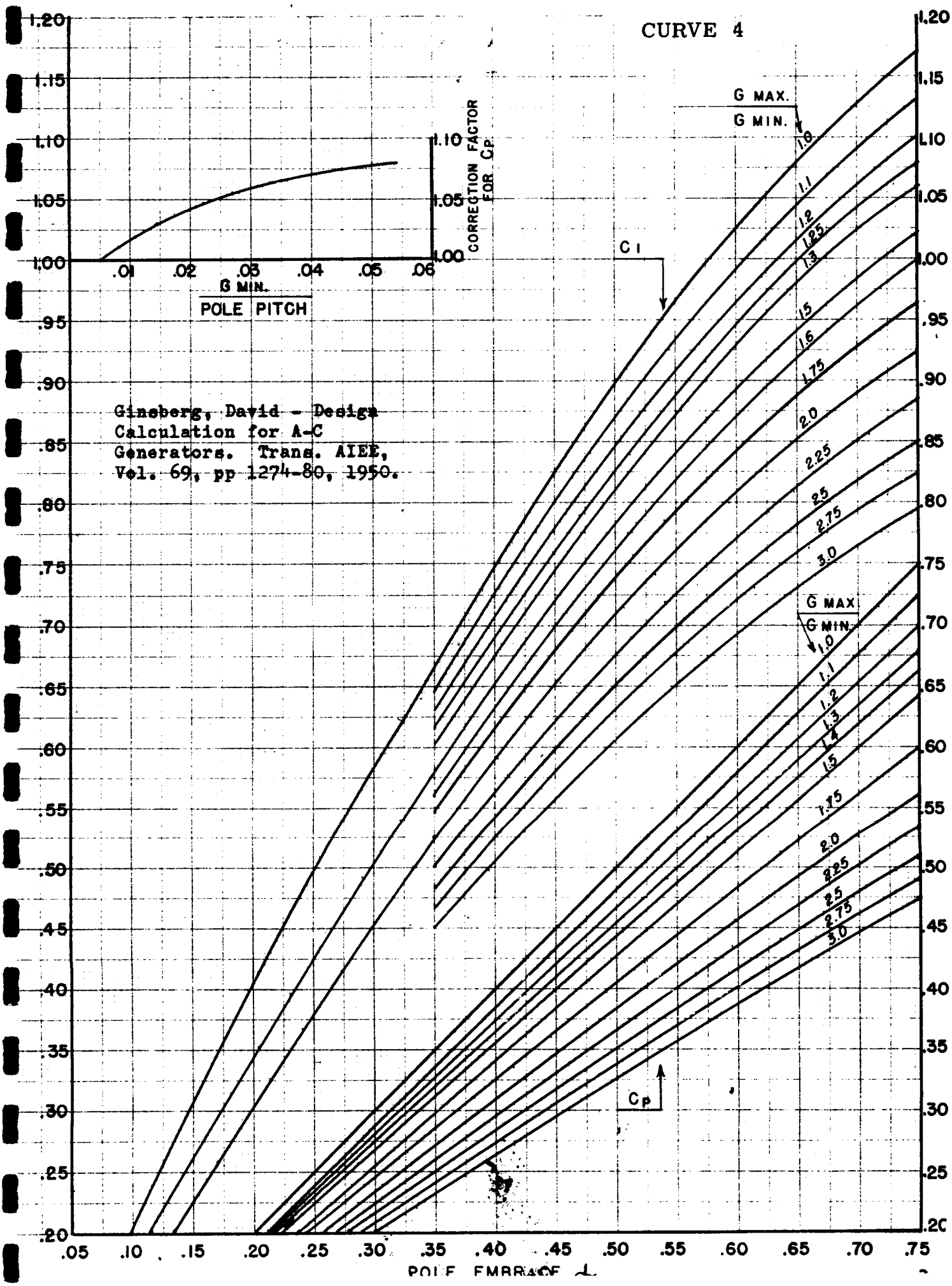

Ginsberg, David - Design Calculation for A-C Generators. Trans. AIEE, Vol. 69, pp 1274-80, 1950.

CURVE 5

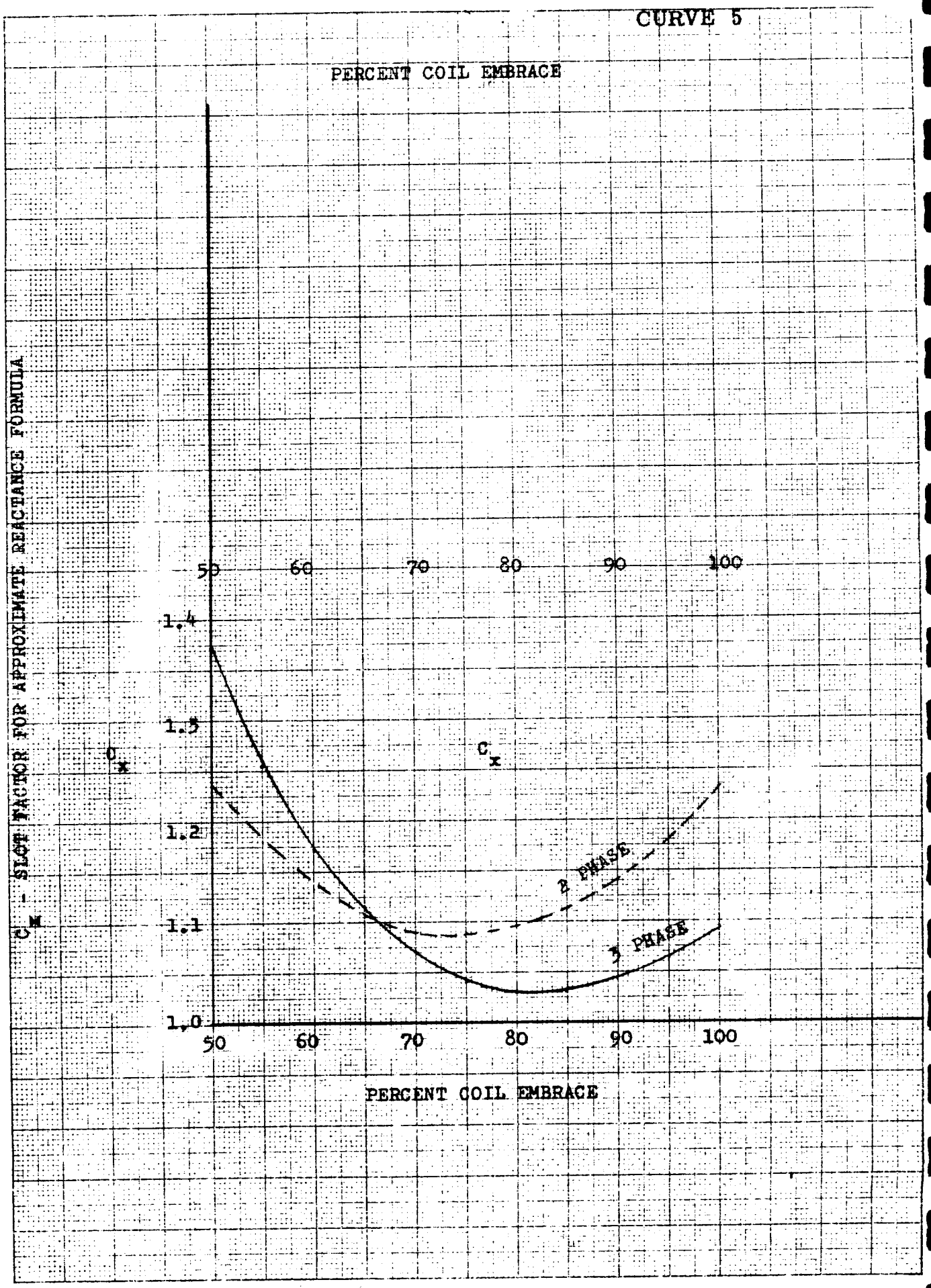
PERCENT COIL EMBRACE
C_x - SLOT FACTOR FOR APPROXIMATE REACTANCE FORMULA
50
60
70
80
90
100
1.4
1.3
1.2
1.1
1.0
C_x
C_x
2 PHASE
3 PHASE
PERCENT COIL EMBRACE

XXL

NO-LOAD DAMPER LOSS CURVE 7

$$D.L. = \frac{1.246 p n_b l_b \rho}{10^6 a_b}\left[\tau_s B_g K_p K_g\right]^2 \left[K_{f1}\left(\frac{K_{w1}}{2\lambda_s + \frac{\lambda_g}{K_{\phi 1}}}\right)^2 + K_{f2}\left(\frac{K_{w2}}{2\lambda_s + \frac{\lambda_g}{K_{\phi 2}}}\right)^2\right]$$

= LOSS IN KW

a_b = BAR AREA IN SQ IN.

n_b = BARS/POLE

p = NO. POLES

l_b = LENGTH BAR IN.

$$\lambda_s = \frac{h_r}{b_r} + \lambda_t + \lambda_e$$

$$\lambda_g = \frac{\tau_b}{K_g g} = \frac{\tau_b}{g'}$$

K_g = CARTER'S COEFFICIENT (TOTAL)

$K_p = fn(b_s/g)$, CURVE (a) ($b_s = b_o$ for partially closed slots)

K_{f1} AND $K_{f2} = fn(f_s/\rho)$ CURVE (b)

ρ = DAMPER BAR RESISTIVITY (MICROHMS PER CU. IN.)

K_{w1} AND $K_{w2} = fn(b_s/\tau_s)$, CURVE (c_1) AND (c_2)

$K_{\phi 1}$ AND $K_{\phi 2} = fn(\tau_b/\tau_s)$, CURVE ($d_1$) AND ($d_2$)

$\lambda_t = fn(b_r/g K_g)$ CURVE (e)

B_g IS IN KILOLINES PER SQ INCH

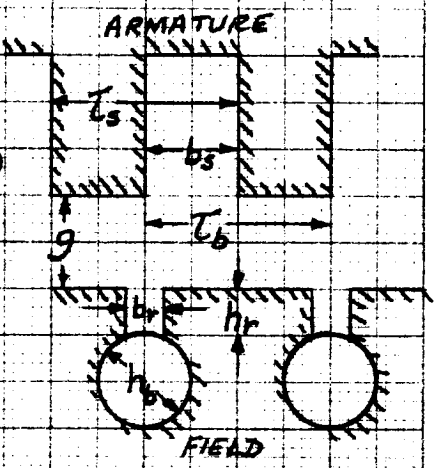

$$\lambda_e = \frac{.75}{K_{f1}} \text{ (FOR ROUND OR SQ. BARS)}$$

$$\lambda_e = \frac{h_b}{3 b_b K_{f1}} \text{ (FOR RECT. BARS)}$$

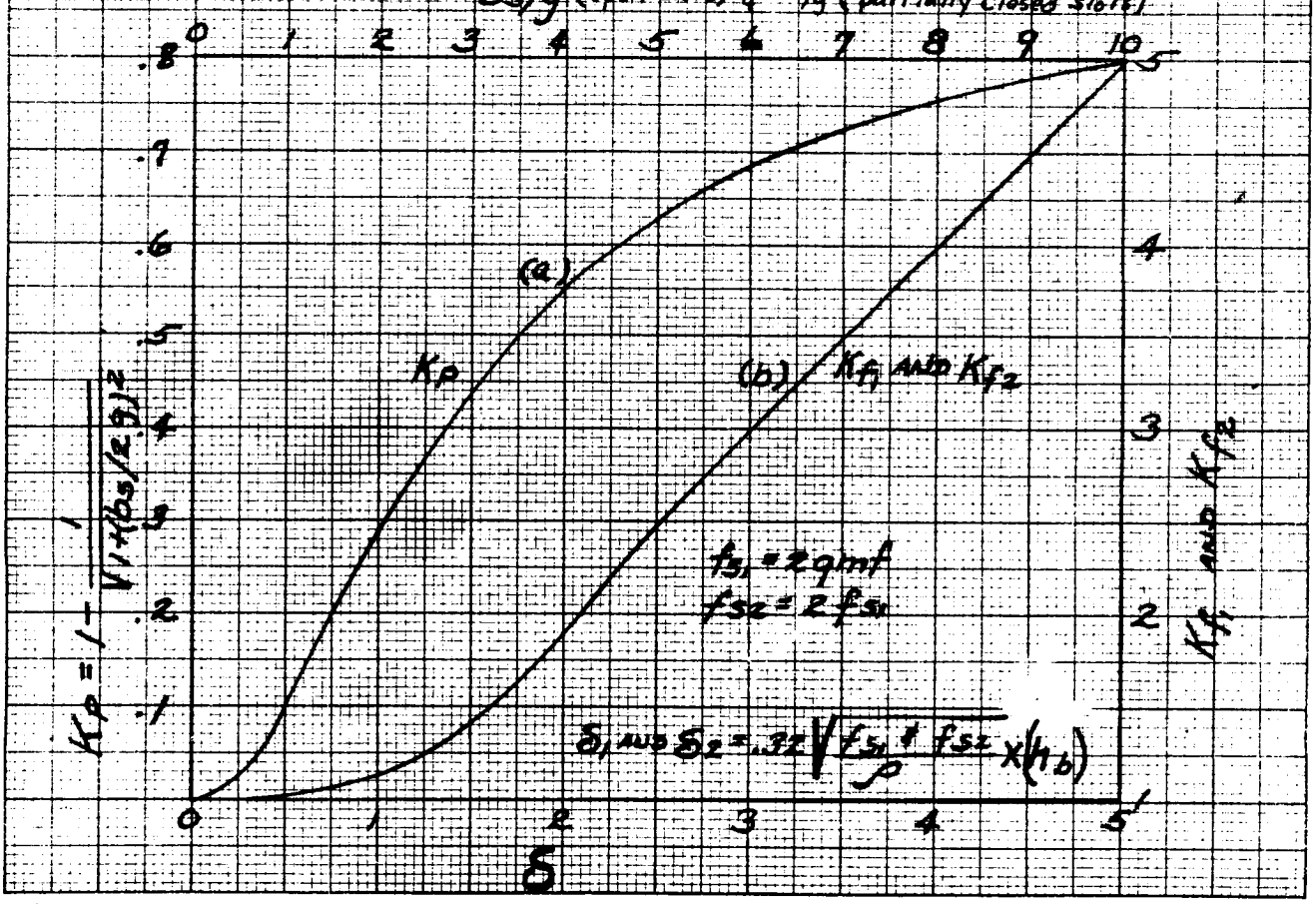

From E. I. Pollard "Calculation of No-Load Damper Winding Loss in Synchronous Machines", AIEE Vol. 51, 1932, pp 477-81.

KEUFFEL & ESSER CO., N. Y. NO. 359-11
10 × 10 to the ½ inch, 5th lines accented
MADE IN U. S. A.

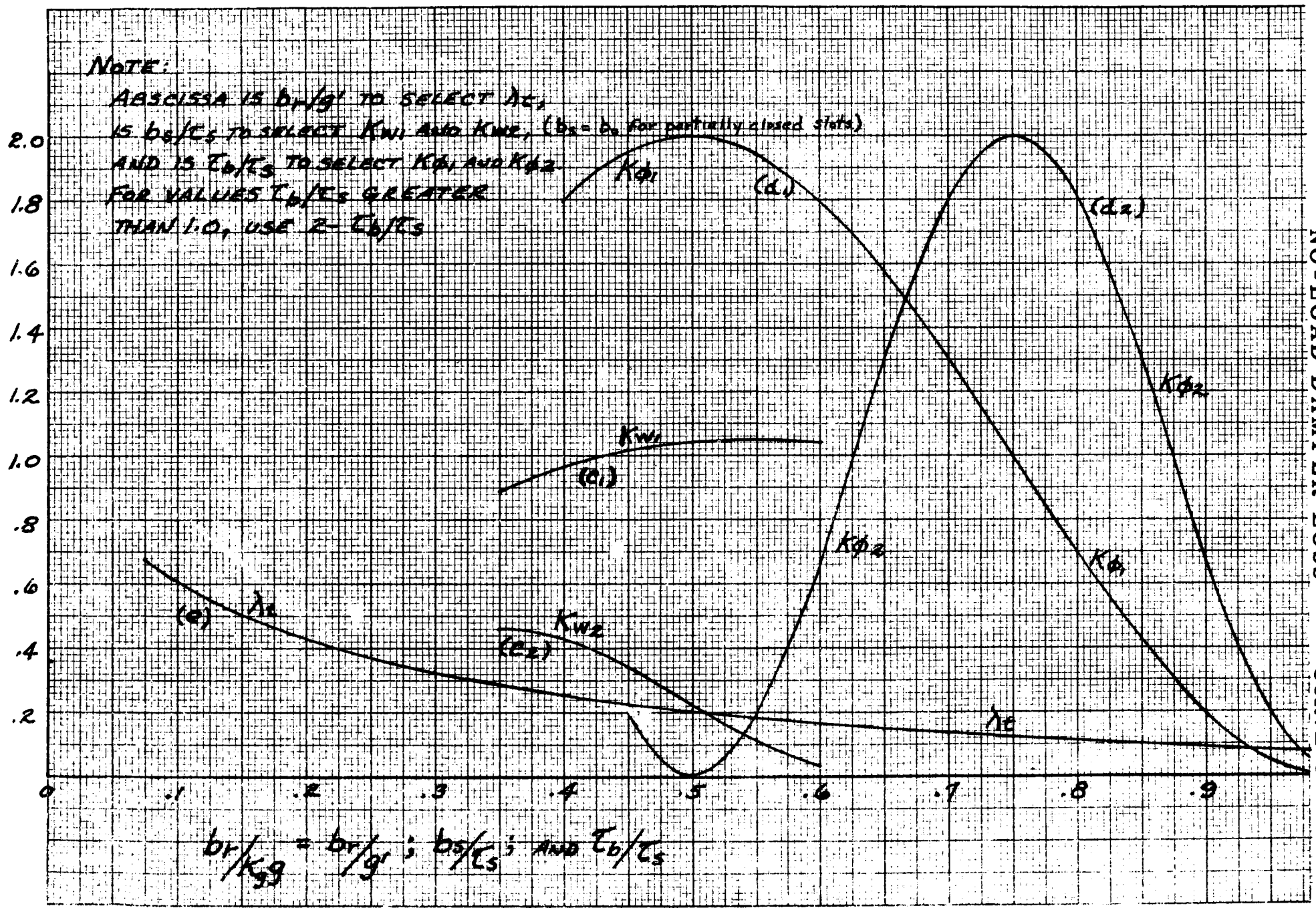

NO-LOAD DAMPER LOSS

CURVE 8

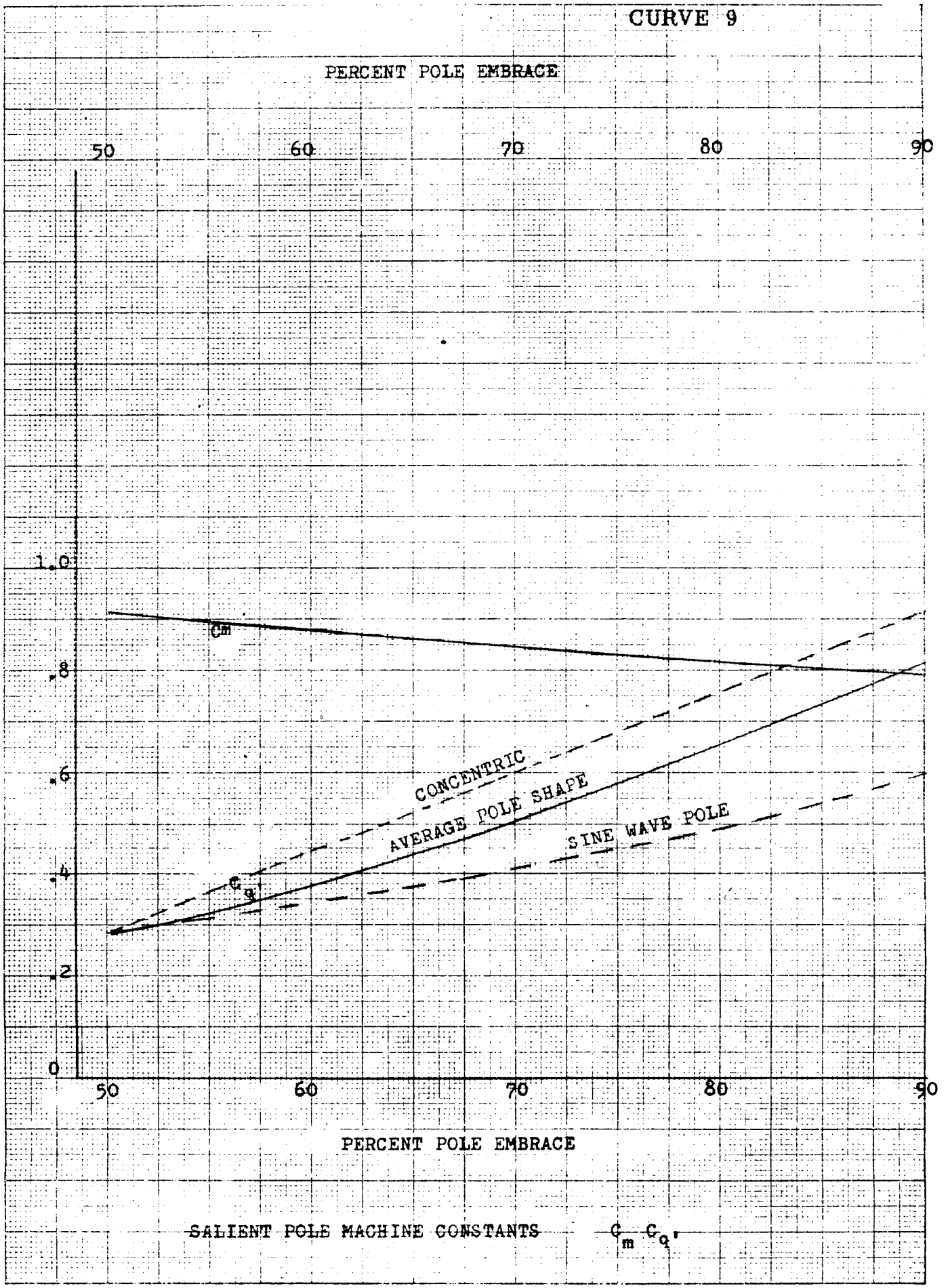

SALIENT POLE MACHINE CONSTANTS — C_m C_q'

10 X 10 TO THE CM. 359-14
KEUFFEL & ESSER CO.

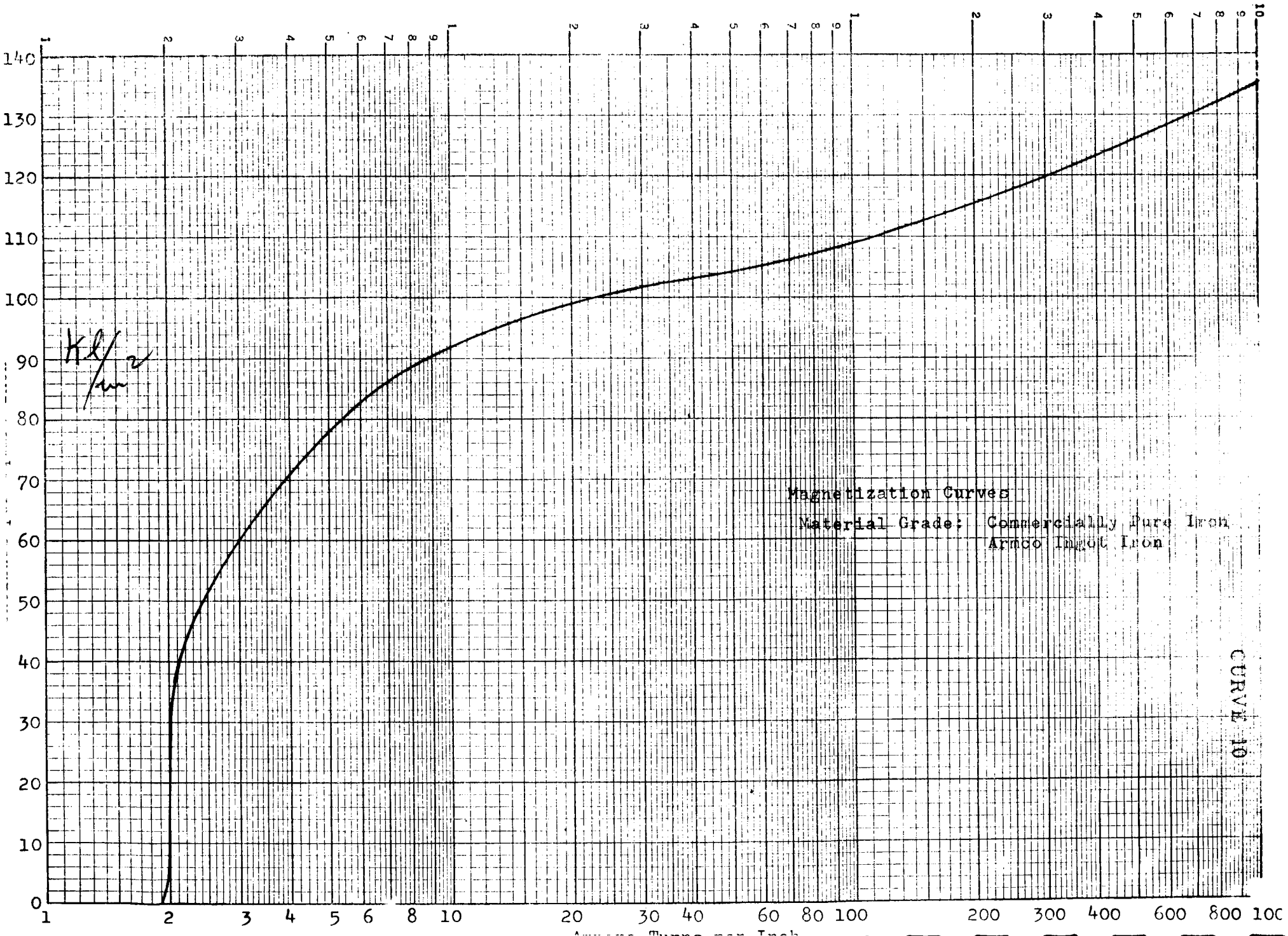
Kl/in²
140
130
120
110
100
90
80
70
60
50
40
30
20
10
0
1
2
3
4
5
6
8
10
20
30
40
60
80
100
200
300
400
600
800
Magnetization Curves
Material Grade: Commercially Pure Iron
Armco Ingot Iron
CURVE 10

K&E SEMI-LOGARITHMIC 359-71
KEUFFEL & ESSER CO.
3 CYCLES X 70 DIVISIONS

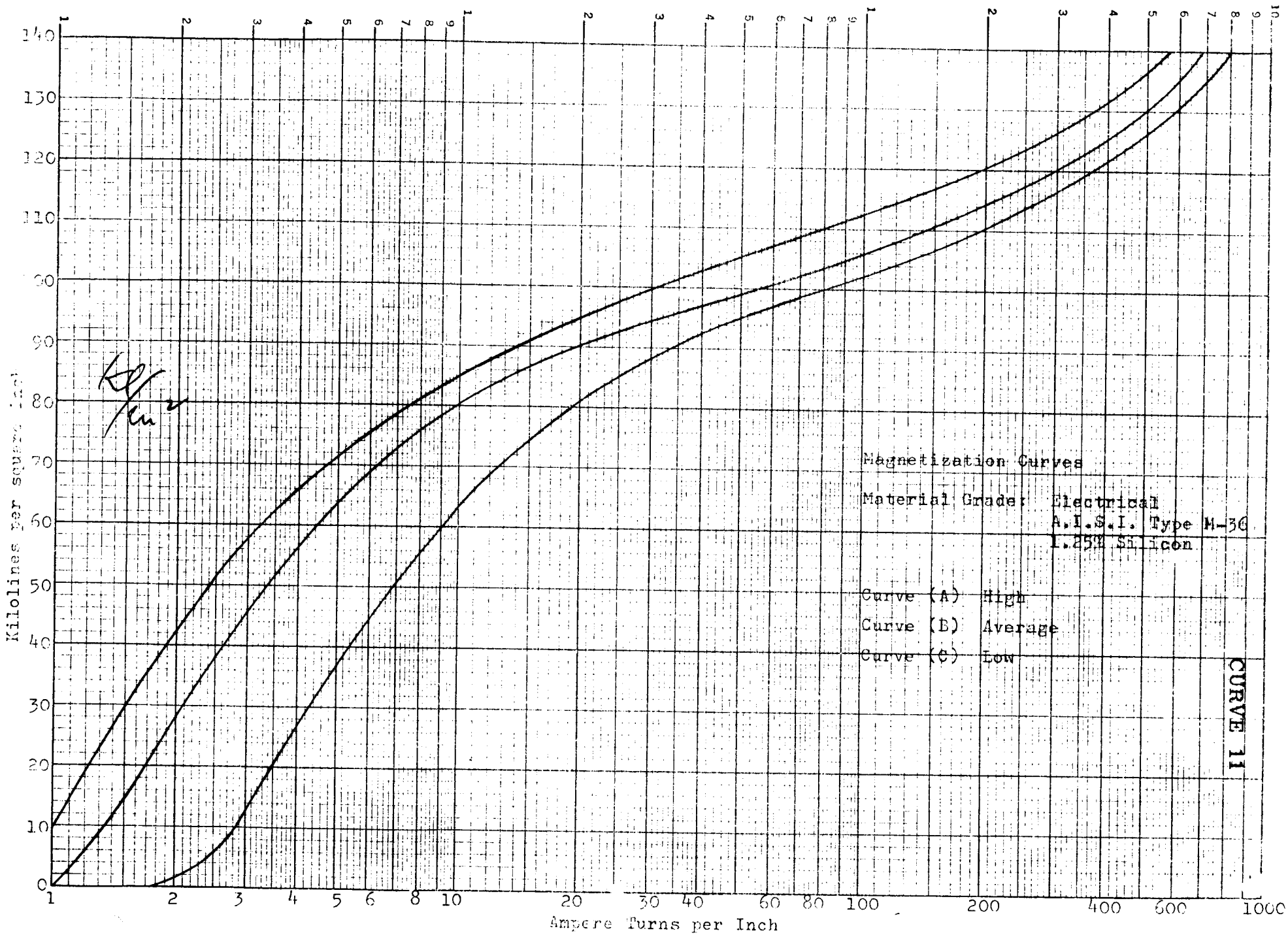

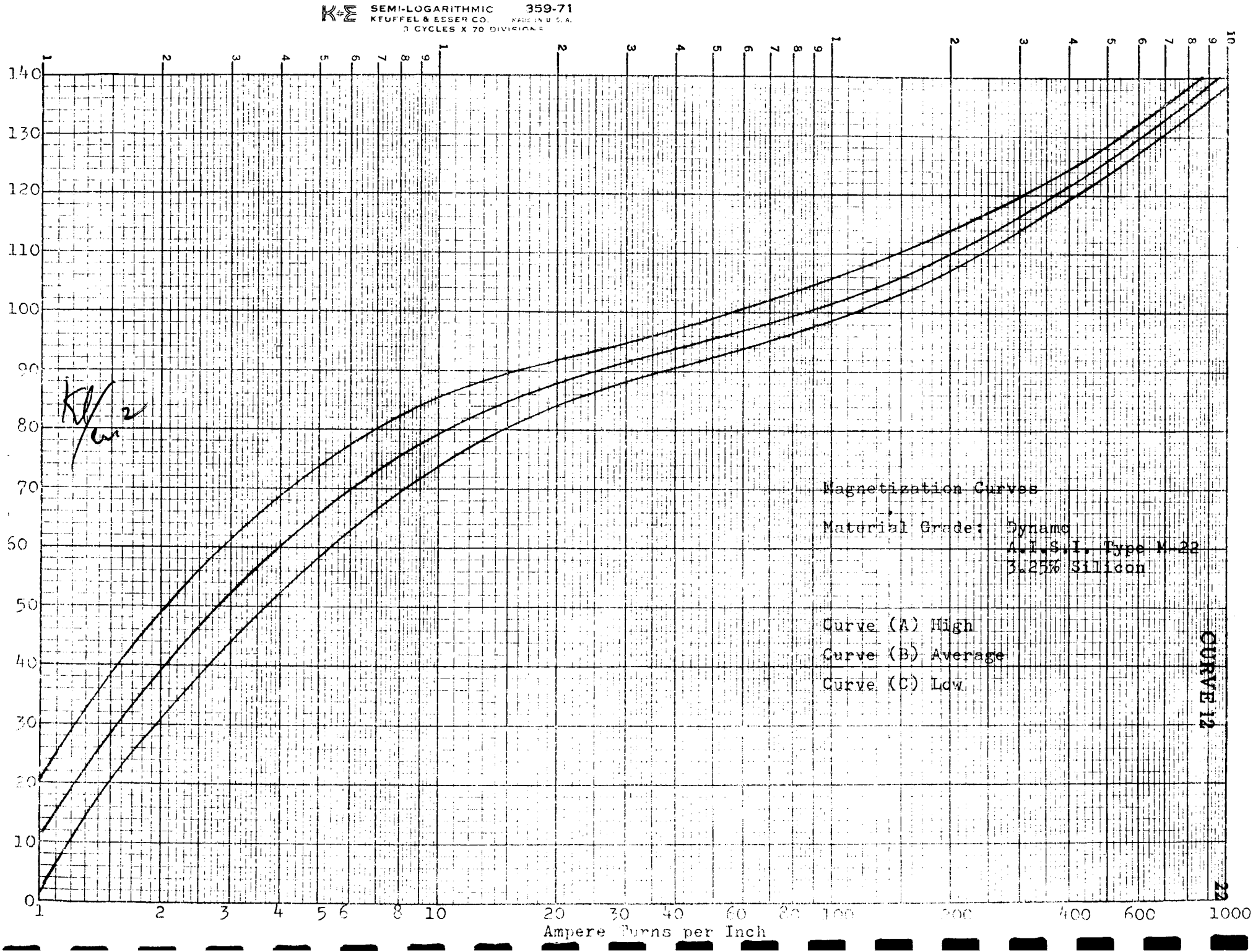
K+E SEMI-LOGARITHMIC 359-71
KEUFFEL & ESSER CO. MADE IN U.S.A.
3 CYCLES X 70 DIVISIONS
KL/in²
Magnetization Curves
Material Grade: Dynamo
A.I.S.I. Type M-22
3.25% Silicon
Curve (A) High
Curve (B) Average
Curve (C) Low
CURVE 12
Ampere Turns per Inch
0
10
20
30
40
50
60
70
80
90
100
110
120
130
140
1
2
3
4
5
6
8
10
20
30
40
60
80
100
200
400
600
1000

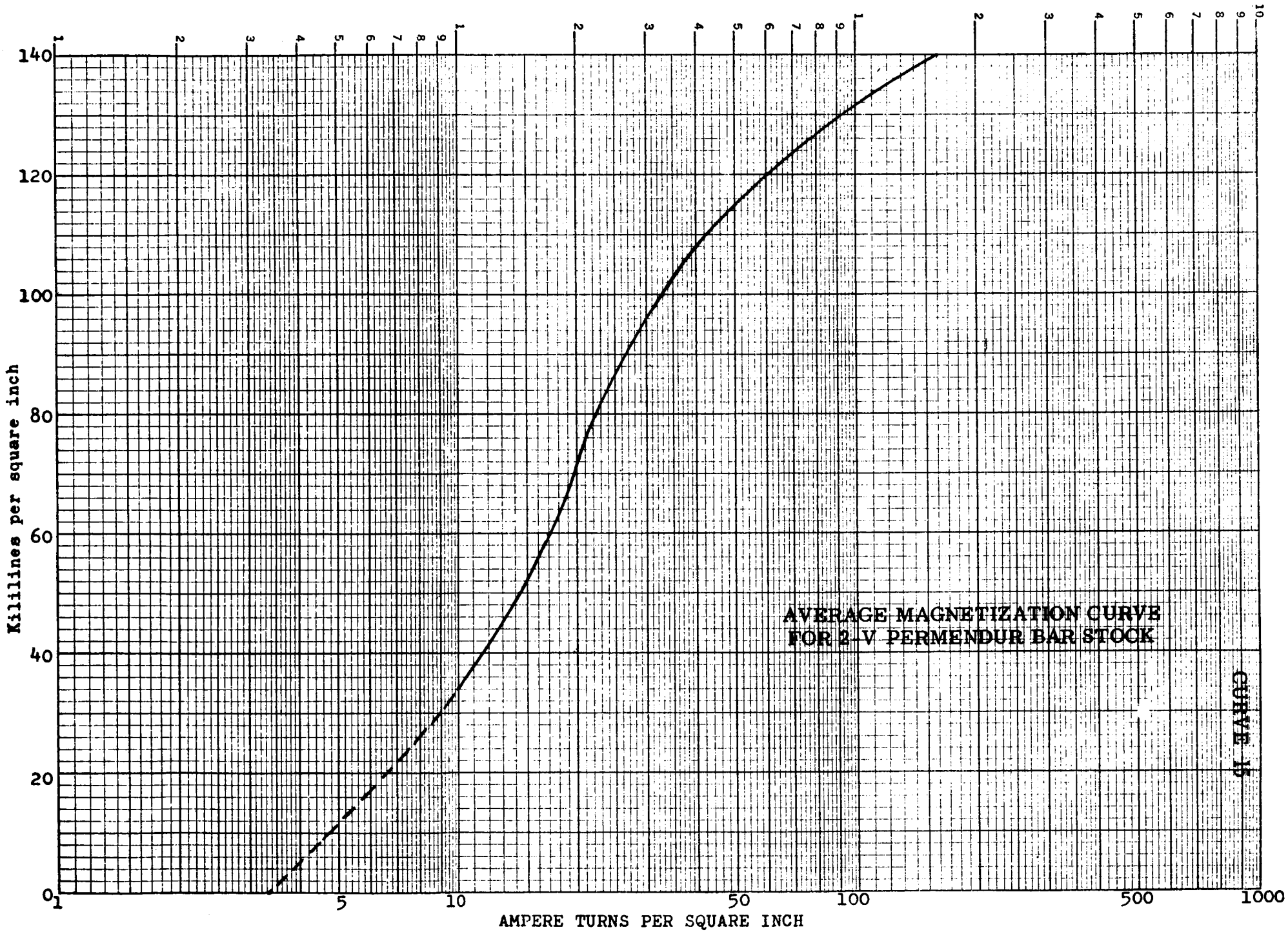
K+E SEMI-LOGARITHMIC 359-71
KEUFFEL & ESSER CO. MADE IN U.S.A.
3 CYCLES X 70 DIVISIONS
Kilolines per square inch
0
20
40
60
80
100
120
140
1
5
10
50
100
500
1000
AMPERE TURNS PER SQUARE INCH
AVERAGE MAGNETIZATION CURVE
FOR 2-V PERMENDUR BAR STOCK
CURVE 16

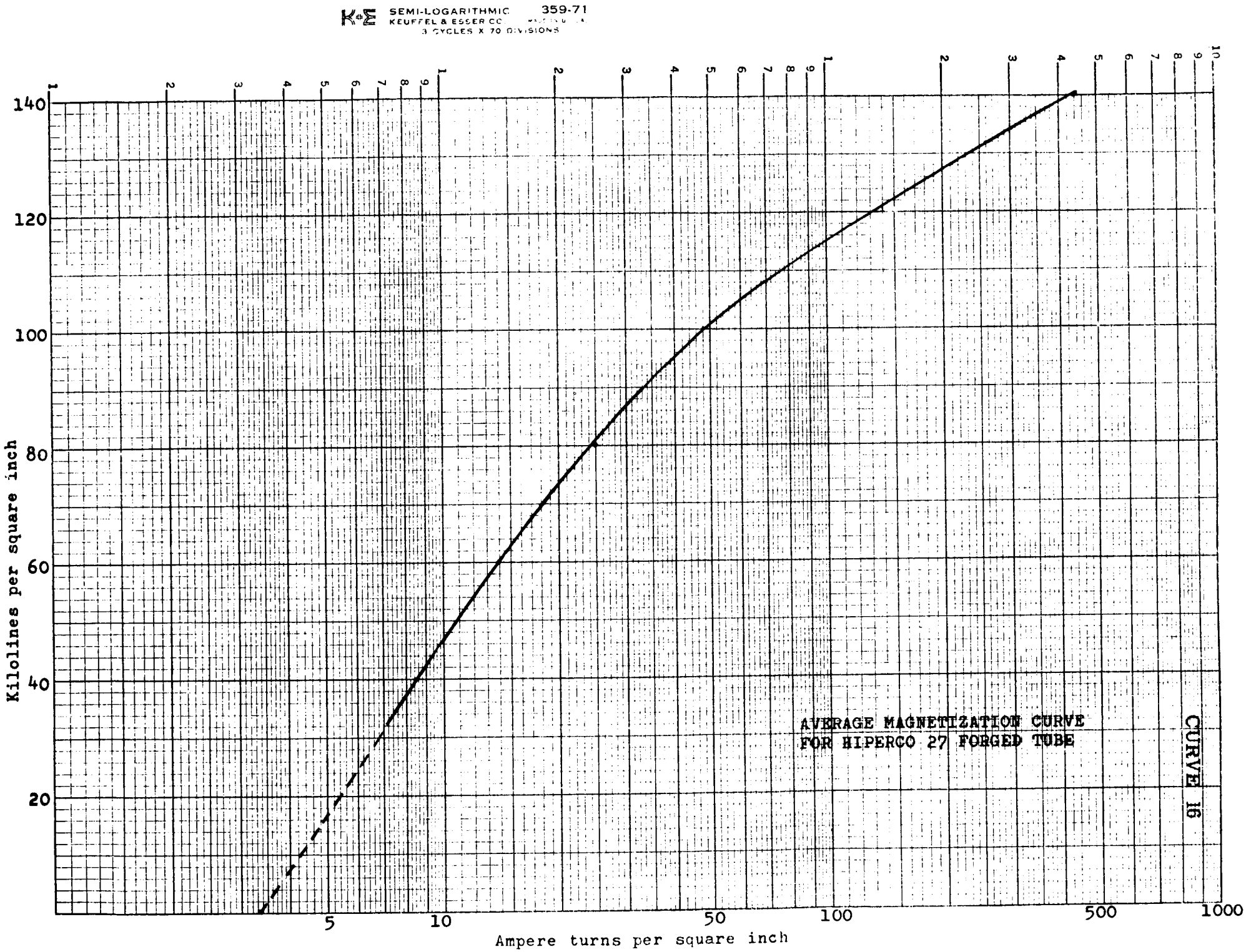
K+E SEMI-LOGARITHMIC 359-71
KEUFFEL & ESSER CO.
3 CYCLES X 70 DIVISIONS
Kilolines per square inch
140
120
100
80
60
40
20
Ampere turns per square inch
5
10
50
100
500
1000
AVERAGE MAGNETIZATION CURVE
FOR HIPERCO 27 FORGED TUBE
CURVE 16

CURVE 17

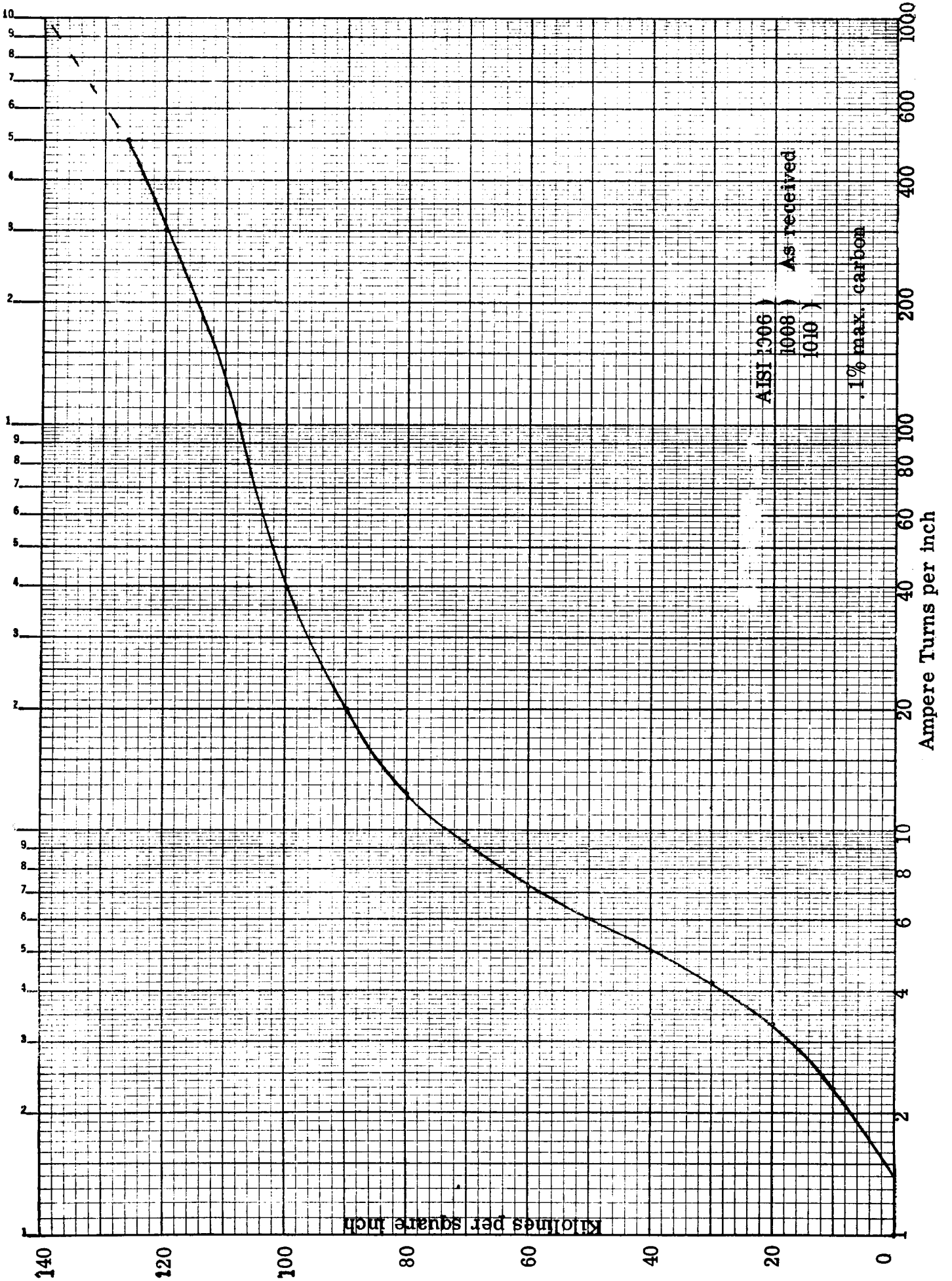
AISI 1006
1008
1010
As received
.1% max. carbon
Ampere Turns per inch
Kilolines per square inch
0
20
40
60
80
100
120
140
1
2
4
6
8
10
20
40
60
80
100
200
400
600
1000

TWO OR SINGLE COIL OUTSIDE COIL LUNDELL

MODEL _____ DWG _____ DESIGN NO(1) _____

PARAMETERS	(2)	KVA	GENERATOR KVA
	(3)	E	LINE VOLTS
	(4)	E_{ph}	PHASE VOLTS
	(5)	m	PHASES
	(5a)	f	FREQUENCY
	(6)	p	POLES
	(7)	RPM	RPM
	(8)	I_{ph}	PHASE CURRENT
	(9)	PF	POWER FACTOR
	(9a)	K_c	ADJ. FACTOR
	(10)		OPTIONAL LOAD POINT
STATOR STAC	(11)	d	STATOR I.D.
	[illegible]	D	STATOR O.D.
	(13)	ℓ	[illegible] ORE LENGTH
	(14)	n_y	NO. [illegible] DUCTS
	(15)	b_y	WI[illegible] OF DUCT
	(16)	K_i	STACKING FACTOR [illegible]
	(19)	k	WATTS/LB.
	(20)	B	DENSITY
STATOR SLOT	(21)		TYPE OF SLOT
	(22)	b_o	SLOT OPENING
	(22)	b_1	SLOT WIDTH TOP
	(22)	b_2	
	(22)	b_3	
	(22)	b_s	SLOT WIDTH
	(22)	h_o	
	(22)	h_1	
	(22)	h_2	
	(22)	h_3	
	(22)	h_s	SLOT DEPTH
	(22)	h_t	
	(22)	h_w	
	(23)	Q	NO. OF SLOTS
STATOR WINDING	(28)		TYPE OF WDG.
	(29)		TYPE OF COIL
	(30)	n_s	CONDUCTORS/SLOT
	(31)	y	SLOTS SPANNED
	(32)	c	PARALLEL CIRCUITS
	(33)		STRAND DIA. OR WIDTH
	(34)	N_{st}	STRANDS/CONDUCTOR IN DEPTH
	(34a)	N'_{st}	STRANDS/CONDUCTOR
	(39)		STATOR STRAND T'KNS.
	(35)	d_b	DIA. OF PIN
	(36)	ℓ_{e2}	COIL EXT. STR. PORT
	(37)	h_{st}	UNINS. STRD. HT.
	(38)	h'_{st}	DIST. BTWN. C_L OF STD.
	(42a)		PHASE BELT ANGLE
	(40)	τ_{sk}	STATOR SLOT SKEW
	(50)	X °C	STATOR TEMP °C
	(51)	ρ_s	RES'TVY STA. COND. @ 20° C
	(78)	ℓ_{g2}	LENGTH OF GAP (g2)
	(78)	d_{g2}	DIAMETER AT GAP (g2)
	(59)	g	MAIN AIR GAP
	(59a)	g2	AUXILIARY AIR GAP

CONSTANTS	RATIO MAX TO MIN OF FUND	(71)	C_1
	WINDING CONSTANT	(72)	C_w
	POLE CONSTANT	(73)	C_p
	END EXTENSION ONE TURN	(48)	LE
	DEMAGNETIZATION FACTOR	(74)	C_m
	CROSS MAGNETIZING FACTOR	(75)	C_q
	POLE EMBRACE	(77)	α
POLE	WIDTH OF POLE (NARROW END)	(76)	b_{p1}
	WIDTH OF POLE (WIDE END)	(76)	b_{p2}
	POLE THICKNESS (NARROW END)	(76)	t_{p1}
	POLE THICKNESS (WIDE END)	(76)	t_{p2}
	POLE LENGTH	(76)	ℓ_p
	ROTOR DIAMETER	(11a)	d_r
	WEIGHT OF ROTOR IRON	(157)	(–)
	POLE FACE LOSS FACTOR	(187)	(K_1)
PERMEANCE	PERM OF LEAKAGE PATH 1	(80)	P_1
	PERM OF LEAKAGE PATH 2	(81)	P_2
	PERM OF LEAKAGE PATH 3	(82)	P_3
	PERM OF LEAKAGE PATH 4	(83)	P_4
	PERM OF LEAKAGE PATH 5	(84)	P_5
	PERM OF LEAKAGE PATH 7	(86)	P_7
	DIA. OF END BELL AT SMALLEST SEC	(78)	d_{y2}
	THICKNESS OF END BELL AT SMALLEST SEC	(78)	t_{y2}
	THICKNESS OF HOUSING SECTION	(78)	t_y
	LENGTH OF HOUSING SECTION	(78)	ℓ_y
	LENGTH OF PERM PATH 1	(80a)	ℓ_1
FIELD	NO. OF FIELD COILS	(146a)	N_{co}
	NO. OF FIELD TURNS/COIL	(146)	N_F
	MEAN LENGTH OF FLD. TURN	(147)	ℓ_{tF}
	FLD. COND. DIA. OR WIDTH	(148)	
	FLD. COND. THICKNESS	(149)	
	FLD. TEMP IN °C	(150)	X_f °C
	RESISTIVITY OF FIELD COND @ 20°	(151)	ρ_f
	NO LOAD SAT.	(87)	
	FRICTION & WINDAGE	(183)	(F&W)
MATR'L	STATOR LAM MATERIAL	(18)	
	POLE MATERIAL	(18)	
	YOKE MATERIAL (FLUX PLATE)	(18)	

STATOR SLOT	POLE
DAMPER SLOT	REMARKS

DESIGNER _____ DATE _____

TWO OR SINGLE COIL OUTSIDE COIL LUNDELL

SUMMARY OF DESIGN CALCULATIONS - - - - - - - - (OUTPUT)

MODEL NO. _____ EWO _____ DESIGN NO. _____

STATOR	(17) (ℓ_s)	SOLID CORE LENGTH			CARTER COEFFICIENT	(67) (K_s)	CONSTANTS
	(24) (h_c)	DEPTH BELOW SLOT			EFFECTIVE AIR GAP	(69) (g_e)	
	(26) (τ_s)	SLOT PITCH			RATIO MAX TO FUND.	(71) (C_1)	
	(27) ($\tau_{s1/3}$)	SLOT PITCH 1/3 DIST. UP			WINDING CONST.	(72) (C_w)	
	(42) (K_{sk})	SKEW FACTOR			POLE CONST.	(73) (C_p)	
	(43) (K_d)	DIST. FACTOR			END. EXT. ONE TURN	(48) (L_E)	
	(44) (K_p)	PITCH FACTOR			DEMAGNETIZING FACTOR	(74) (C_M)	
	(45) (n_e)	EFF. CONDUCTORS			CROSS MAGNETIZING FCTR	(75) (C_q)	
	(46) (a_c)	COND. AREA			AMP COND/IN	(128) (A)	REACTANCE
	(47) (S_s)	CURRENT DENSITY (STA.)			REACTANCE FACTOR	(129) (X)	
	(49) (ℓ_t)	1/2 MEAN TURN			LEAKAGE REACTANCE	(130) (X_ℓ)	
	(53) (R_{ph})	COLD STA. RES. @20° C			REACTANCE DIRECT AXIS	(131) (X_{ad})	
	(54) (R_{ph})	HOT STA. RES. @ X°C			REACTANCE QUAD AXIS	(132) (X_{aq})	
	(55) (EF_{top})	EDDY FACTOR TOP			SYN REACT DIRECT AXIS	(133) (X_d)	
	(56) (EF_{bot})	EDDY FACTOR BOT			SYN REACT QUAD AXIS	(134) (X_q)	
	(62) (λ_i)	STATOR COND. PERM.			FIELD LEAKAGE REACT	(160) (X'_f)	
	(63) (λ_e)	END PERM.			FIELD SELF INDUCTANCE	(161) (L_f)	
	(65) ( )	WT. OF STA COPPER			UNSAT. TRANS. REACT	(166) (X'_{du})	
	(66) ( )	WT. OF STA IRON			SAT. TRANS. REACT	(167) (X'_d)	
	(41) (τ_p)	POLE PITCH			SUB. TRANS REACT DIRECT AX.	(168) (X''_d)	
	(157) (–)	WT OF ROTOR IRON			SUB. TRANS REACT QUAD AX.	(169) (X''_q)	
	(145) (V_p)	PERIPHERAL SPEED			NEG SEQUENCE REACT	(170) (X_2)	
FIELD	(153) (a_{cF})	FLD COND. AREA			ZERO SEQUENCE REACT	(172) (X_0)	
	(154) (R_F)	COLD FLD RES @ 20°C			OPEN CIR. TIME CONST.	(176) (T_{do})	TIME CONST
	(155) (R_F)	HOT FLD RES @ X°C			ARM TIME CONST.	(177) (T_a)	
	(156) (–)	WT OF FLD COPPER			TRANS TIME CONST.	(178) (T'_d)	
PERMEANCE	(80) (P_1)	PERM OF LEAKAGE PATH 1			SUB TRAN TIME CONST.	(179) (T''_d)	
	(81) (P_2)	PERM OF LEAKAGE PATH 2			TOTAL FLUX	(90) (ϕ_T)	MAGNETIZATION
	(82) (P_3)	PERM OF LEAKAGE PATH 3			FLUX PER POLE	(93) (ϕ'_p)	
	(83) (P_4)	PERM OF LEAKAGE PATH 4			GAP DENSITY (MAIN)	(95) (B'_g)	
	(84) (P_5)	PERM OF LEAKAGE PATH 5			TOOTH DENSITY	(91) (B'_t)	
	(86) (P_7)	PERM OF LEAKAGE PATH 7			CORE DENSITY	(94) (B'_c)	
	(180) (FSC)	SHORT CIR NI			TOOTH AMPERE TURNS	(97) (F'_t)	
	(181) (SCR)	SHORT AIR RATIO			CORE AMPERE TURNS	(98) (F'_c)	
					GAP AMPERE TURNS (MAIN)	(96) (F'_g)	

PERCENT LOAD	0		100	150	200	OPTIONAL
(ϕ_ℓ) (100) LEAKAGE FLUX		($\phi_{\ell L}$)(196a)				
(ϕ_{PT}) (102) TOTAL FLUX/POLE		(ϕ_{PTL})(213a)				
(B_P) (103) POLE DENSITY		(B_{PL})(213b)				
(B_{g2}) (122) AUX GAP DENSITY		(B_{g2L})(224)				
(B_{Y2}) (125) END BELL DENSITY		(B_{Y2L})(228)				
(B_Y) (126a) HOUSING DENSITY		(B_{YL})(229b)				
(F_{NL}) (127) TOTAL NI		(F_{FL})(236)				
(I_{FNL}) (127a) FIELD AMPERES		(I_{FFL})(237)				
(S_F) (127c) CUR DEN FLD		( )(239)				
(E_{FNL}) (127b) FIELD VOLTS		(E_{FFL})(238)				
(W_C) (185) STA CORE LOSS		(W_C)(185)				
(W_{TNL}) (184) STA TOOTH LOSS		(W_{TFL})(242)				
(I^2R_S) (194) STATOR CU LOSS		(I^2R_S)(245)				
(–) (195) EDDY LOSS		(–) (246)				
(W_{PNL}) (186) POLE FACE LOSS		(W_{PFL})(243)				
(I^2R_F) (182) FIELD COIL LOSS		(I^2R_F)(241)				
(F&W) (183) F&W LOSS		(F&W) (183)				
(–) (196) TOTAL LOSSES		(–) (247)				
(–) (–) PERCENT EFF		(–) (251)				
((		(				

TWO OR SINGLE } COIL OUTSIDE COIL LUNDELL

NO LOAD SATURATION OUTPUT SHEET

ITEMS → / ↓% VOLTS	(3) (E) VOLTS / (100) ϕ_ℓ LEAKAGE FLUX	(91) B_t STA. TOOTH DENSITY / (102) ϕ_{PT} TOTAL FLUX/POLE	(97) F_t STA. TOOTH NI / (103) B_p POLE DENSITY	(94) B_c STA. CORE DENSITY / (125) B_{YZ} END BELL DENSITY	(98) F_c STA. CORE N.I / (126a) B_y HOUSING DENSITY	(96) F_g MAIN GAP DENSITY / (127) F_{NL} TOTAL N.I.
80%						
90%						
100%						
110%						
120%						
130%						
140%						
150%						
160%						

SINGLE)
OR) OUTSIDE COIL LUNDELL
TWO COIL)

Calculation Number	Electrical Symbol	Fortran Symbol	Explanation
		A, a	
(128)	A	A	Ampere conductors per inch
(46)	a_c	AC	Conductor area of stator winding
(153)	a_{cf}	AS	Conductor area of field coil
(70)	A_{g2}	A2	Auxiliary air gap (g2) area
(124)	A_{y2}	AY2	Cross sectional area of coil yoke
(79)	a_p	AP	Pole area
		B, b	
(20)	B	BK	Density
(22)	b_o	BO	Width of stator slot opening
(94)	B_c,	BC1	Stator core density N. L.
(76)	b_{p1}	BP1	Width of pole at end of stator stack
(76)	b_{p2}	BP2	Width of pole at end of statoc stack
(95)	B_g,	BG1	Main air gap density (N. L.)
(122)	B_{g2}	BG2	Auxiliary gap (g2) density (
(224)	B_{g2FL}	BG2L	Density in auxiliary gap (g2) (F. L.)
(58)	b_t		Tooth width at stator I. D.
(57a)	$b_{t\ 1/3}$	SM	Stator tooth width 1/3 distance from narrowest end
(91)	B_T,	BT1	Stator tooth density (N. L.)
(57)	b_{tm}	TM	Stator tooth width 1/2 distance from narrowest end

Calculation Number	Electrical Symbol	Fortran Symbol	Explanation
(126a)	B_y	BY	Density in the housing section of yoke
(229b)	B_{yL}	BYL	Flux density in housing section of yoke
(228)	B_{y2L}	BY2L	Density in end bell section of yoke
(15)	b_v	BV	Radial duct width
(125)	B_{y2}	BY2	Coil yoke density
		C, c	
(32)	c	C	Parallel paths
(71)	C_1	C1	Ratio of maximum fundamental of field form to the actual maximum of the field form
(74)	C_M	CM	Demagnetizing factor
(73)	C_P	CP	Pole constant
(75)	C_q	CQ	Cross magnetizing factor
(72)	C_W	CW	Winding constant
		D, d	
(12)	D	DU	Stator lamination outside diameter
(11)	d	DI	Stator lamination inside diameter
(35)	d_b	DB	Diameter of bender pin
(11a)	d_r	DR	Outside rotor diameter
(78)	d_{g2}	DG2	Rotor diameter at auxiliary air gap
(78)	d_{y2}	DY2	Diameter of yoke (end bell section) at narrowest section

Calculation Number	Electrical Symbol	Fortran Symbol	Explanation
		E, e	
(3)	E	EE	Line volts
(55)	EF_{TOP}	ET	Eddy factor top
(56)	EF_{BOT}	EB	Eddy factor bottom
(238)	E_{FFL}	EPFL	Full load field volts
(127b)	E_{FNL}	EPNL	No load field volts
(4)	E_{PH}	EP	Phase volts
		F, f	
(5a)	f	F	Frequency
(98)	F_c,	FC	N. L. stator core ampere turns
(236)	F_{FL}	FFL	Total full load ampere turns
(96)	F_g,	FG	N. L. main gap ampere turns
(123)	F_{g2}	FG2	N. L. gap (g2) ampere turns
(225)	F_{g2FL}	FG2L	F. L. gap (g2) ampere turns
(127)	F_{NL}	FNL	Total no load ampere turns
(104)	F_P	FP	Pole ampere turns
(126b)	F_y	FY	Ampere turn drop in housing section of yoke
(180)	F_{SC}	FSC	Short circuit ampere turns
(97)	F_T,	FT	N. L. stator tooth ampere turns
(183)	F & W	WF	Friction and windage
(126)	F_{y2}	FY2	N. L. coil yoke ampere turns

Calculation Number	Electrical Symbol	Fortran Symbol	Explanation
(229c)	F_{yL}	FYL	Ampere turn drop in housing section of yoke
(229)	F_{y2L}	FY2L	Ampere turn drop in end bell section of yoke
		G, g	
(59)	g	GC	Main air gap
(59a)	g_2	G2	Auxiliary air gap
(69)	g_e	GE	Effective main gap
		H, h	
(24)	h_c	HC	Depth below slot
(38)	h'_{ST}	SD	Distance between center line of strand in depth
(39)	h_{ST}	SH	Stator coil strand thickness (largest dimension)
		I, i	
(237)	I_{FFL}	AIFL	F. L. field current
(127a)	I_{FNL}	AINL	N. L. field current
(8)	I_{PH}	PI	Phase current
(182)	I^2R_F	FEL	N. L. field coil loss
(241)	I^2R_F	FCUL	F. L. coil copper loss
(194)	I^2R	PS	N. L. stator copper loss
(245)	I^2R_L	SCUL	F. L. stator copper loss

Calculation Number	Electrical Symbol	Fortran Symbol	Explanation
		K, k	
(19)	k	WL	Watts/lb core loss
(9a)	K_c	CK	Adjustment factor
(43)	K_d	DF	Distribution factor
(63)	K_e	EK	Leakage reactive factor
(16)	K_i	SF	Stacking factor
(44)	K_p	CF	Pitch factor
(67)	K_s	CC	Carter coefficient
(42)	K_{SK}	FS	Skew factor
(2)	K_{VA}	VA	Generator rating
(61)	K_X	FF	Factor to account for difference in phase current in coil sides in same slot
		L, l	
(13)	ℓ	CL	Gross core length (stator)
(80)	ℓ_1	AL1	Length of leakage path 1
(80)	ℓ_2	AL2	Length of leakage path 2
(82)	ℓ_3	AL3	Length of leakage path 3
(48)	L_E	EL	Stator coil and extension length
(36)	ℓ_{e2}	CE	Coil extension beyond core
(161)	L_F	SI	Field inductance
(78)	ℓ_{g2}	ALG2	Horizontal length of (g2) air gap

Calculation Number	Electrical Symbol	Fortran Symbol	Explanation
(78)	t_y	TY	Thickness of housing section of yoke
(78)	t_{y2}	TY2	Thickness of end bell section of yoke
		V, v	
(145)	V_r	VR	Peripheral speed
		W, w	
(185)	W_C	WQ	Stator core loss
(186)	W_{NPL}	WN	N. L. pole face loss
(243)	W_{PFL}	WNL	F. L. pole face loss
(242)	W_{TFL}	WTFL	F. L. stator teeth loss
(184)	W_{TNL}	WT	N. L. stator teeth loss
		X, x	
(129)	X	XR	Reactance factor
(131)	X_{ad}	XD	Reactance direct axis
(132)	X_{aq}	XQ	Reactance quadrature axis
(133)	X_d	XA	Synchronous reactance - direct axis
(167)	X_d'	XS	Saturated transient reactance
(168)	X_d''	XX	Subtransient reactance direct axis
(166)	X_{du}'	XU	Unsaturated transient reactance
(160)	X_F'	XF	Effective field leakage reactance

Calculation Number	Electrical Symbol	Fortran Symbol	Explanation
(76)	ℓ_P	ALP	Length of pole
(17)	ℓ_s	SS	Solid core length
(49)	ℓ_t	HM	1/2 mean turn (stator coil)
(147)	ℓ_{tf}	FE	1/2 mean turn of field coil
(78)	ℓ_y	ALY	Length of housing yoke
	M, m		
(5)	m	PN	No. of phases
	N, n		
(146a)	N_{co}	COILS	Number of field coils
(146)	N_F	PT	Field turns per coil
(45)	n_e	EC	Effective conductors
(30)	n_s	SC	Conductors per slot
(34)	N_{ST}	SN	Strands per conductor in depth
(34a)	N'_{ST}	SN1	Strands per conductor (total)
(14)	n_v	HV	Radial ducts
	P, p		
(6)	p	PX	No. of poles
(9)	PF	PF	Power factor
(80)	P_1	P1	Pole head end leakage permeance
(81)	P_2	P2	Pole head side leakage permeance
(82)	P_3	P3	Pole body end leakage permeance

Calculation Number	Electrical Symbol	Fortran Symbol	Explanation
(83)	P_4	P4	Pole body side leakage permeance
(84)	P_5	P5	Coil leakage to north pole permeance
(86)	P_7	P7	Stator core to rotor skirt leakage permeance
		Q, q	
(23)	Q	QQ	No. of slots
(25)	q	QN	Slots per pole per phase
		R, r	
(154)	R_f (cold)	FK	Cold field resistance at 20 °C
(155)	R_f (hot)	FR	Hot field resistance at X °C
(7)	RPM	RPM	Revolutions per minute
(53)	R_{SPH} (cold)	RG	Stator resistance per phase at 20 °C
(54)	R_{RPH} (hot)	RP	Stator resistance per phase at X °C
		S, s	
(181)	SCR	SCR	Short circuit ratio
(127c)	S_F	CD	Current density in field conductor
(47)	S_S	S	Current density in stator conductor
		T, t	
(177)	T_a	TA	Armature time constant
(178)	T'_d	T5	Transient time constant
(176)	T'_{do}	TC	Open circuit time constant

Calculation Number	Electrical Symbol	Fortran Symbol	Explanation
(150)	X_f °C	T2	Expected field temperature at full load
(130)	X_ℓ	XL	Leakage reactance
(169)	X_q''	XY	Subtransient reactance quadrature axis
(134)	X_q	XB	Synchronous reactance quadrature axis
(50)	X_s °C	TI	Stator expected temperature at F. L.
(170)	X_2	XN	Negative sequence reactance
(172)	X_o	XO	Zero sequence reactance
	Y, y		
(31)	y	YY	Throw or coil span
	Ø		
(108)	$Ø_{g2}$	PG2	Flux crossing auxiliary gap N. L.
(221)	$Ø_{g2L}$	PG2L	Flux crossing auxiliary gap F. L.
(100)	$Ø_\ell$	PL	ROTOR LEAKAGE FLUX
(118)	$Ø_{\ell 5}$	PL5	N. L. leakage flux in Path 5
(99)	$Ø_{\ell 7}$	PL7	N. L. leakage flux in Path 7
(226)	$Ø_{5L}$	PL5L	F. L. leakage flux in Path 5
(207)	$Ø_{7L}$	PL7L	F. L. leakage flux in Path 7
(92)	$Ø_p$	FQ	Flux per pole N. L.

Calculation Number	Electrical Symbol	Fortran Symbol	Explanation
(213)	ϕ_{PL}	FQL	Flux per pole F. L.
(102)	ϕ_{PT}	PLT	Total flux per pole
(88)	ϕ_{T}	TG	Total flux N. L.
(227)	ϕ_{y2L}	PG2L	Flux in end bell section of yoke under load
	τ		
(41)	τ_p	TP	Pole pitch
(26)	τ_s	TS	Stator slot pitch
(40)	τ_{SK}	SK	Stator slot skew
(27)	$\tau_{S\,1/3}$	TT	Stator slot pitch 1/3 distance from narrowest section of tooth
	λ		
(64)	λ_E	EW	End winding permeance
(62)	λ_i	PC	Conductor permeance
	ρ		
(151)	ρ_f	RR	Resistivity of field conductor at 20 °C
(152)	$\rho_{f\,(hot)}$		Resistivity of field conductor at expected temperature at F. L.
(51)	ρ_s	RS	Resistivity of stator winding at 20 °C
	α		
(77)	α	PE	Pole embrace

TWO-COIL, OUTSIDE COIL LUNDELL

(1)	--	DESIGN NUMBER - To be used for filing purposes
(2)	KVA	GENERATOR KVA
(3)	E	LINE VOLTS
(4)	E_{PH}	PHASE VOLTS - For 3 phase, Y [redacted] connected generator $E_{PH} = \frac{(\text{Line Volts})}{\sqrt{3}} = \frac{(3)}{\sqrt{3}}$ For 3 phase, Δ [redacted] connected generator $E_{PH} = (\text{Line Volts}) = (3)$
(5)	m	PHASES - Number of
(5a)	f	FREQUENCY - In cycles per second
(6)	P	POLES - Number of
(7)	RPM	SPEED - In revolutions per minute
(8)	I_{PH}	PHASE CURRENT - In amperes at rated load
(9)	P.F.	POWER FACTOR - Given in per unit
(9a)	K_c	ADJUSTMENT FACTOR - When P.F. = 0. to .95 set $K_c = 1.$; when P.F. = .95 to 1. set $K_c = 1.05$
(10)	--	LOAD POINTS - The computer program is set up to have the 0.%, 100%, 150%, 200% load points as standard outputs. There is an additional space available on the output sheet for one optional load point. This optional

load point will be the designer's choice and can be selected anywhere in the range of 0 to 200% load. When an optional load calculation is required, insert the per unit load value on the input sheet. The optional load point will be calculated in addition to the standard points listed above. For example, insert .33 on the input sheet when the optional load calculation for 33% load is required in addition to the standard points.

If only the standard points are required, insert 0.0 on the input sheet and the optional load column will be blank.

(11) d STATOR PUNCHING I.D. - The inside diameter of the stator punching in inches.

(11a) d_r ROTOR O.D. - The outside diameter of the rotor in inches.

(12) D PUNCHING O.D. - The outside diameter of the stator punching in inches.

(13) GROSS STATOR CORE LENGTH - In inches.

(14) n_v RADIAL DUCTS - Number of.

(15) b_v RADIAL DUCT WIDTH - In inches.

(16) K_i STACKING FACTOR - This factor allows for the coating (core plating) on the punchings, the burrs due to slotting, and the deviations in flatness. Approximate values of K_i are given in Table IV.

THICKNESS OF LAMINATIONS (INCHES)	GAGE	K_i
.014	29	0.92
.018	26	0.93
.025	24	0.95
.028	23	0.97
.063	--	0.98
.125	--	0.99

TABLE IV

(17) ℓ_s SOLID CORE LENGTH - The solid length is the gross length times the stacking factor. If ventilating ducts are used, their length must be subtracted from the gross length also.

$$\ell_s = (K_i)\left[(\ell) - (n_v)\ (b_v)\right] = (16)\left[(13) - (14)\ (15)\right]$$

(18) MATERIAL - This input is used in selecting the proper magnetization curves for stator;

yoke; & pole; when different materials are used. Separate spaces are provided on the input sheet for each section mentioned above. Where curves are available on card decks, used the proper identifying code. Where card decks are not available submit data in the following manner:

The magnetization curve must be available on semi-log paper. Typical curves are shown in this manual on Curves 15 and 16. Draw straight line segments through the curve starting with zero density. Record the coordinates of the points where the

straight line segments intersect. Submit these coordinates as input data for the magnetization curve. The maximum density point must be submitted first.

Refer to Figure below for complete sample

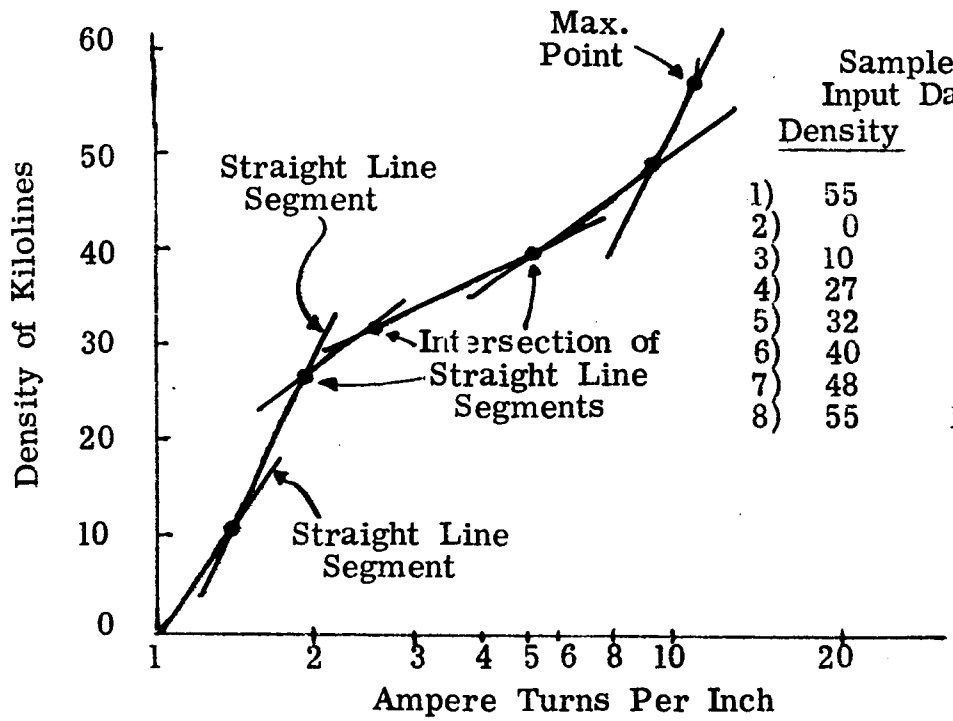

Sample Input Data

	Density	NI
1)	55	Max.
2)	0	0
3)	10	1.5
4)	27	1.9
5)	32	2.5
6)	40	4.9
7)	48	9.0
8)	55	12.0

(19) k WATTS/LB - Core loss per lb of stator lamination material. Must be given at the density specified in (20).

(20) B DENSITY - This value must correspond to the density used in Item (19) to pick the watts/lb. The density that is usually used is 77.4 kilolines/in^2.

(21) 1 2 3 4 5

TYPE OF STATOR SLOT - Refer to Figure 1, Page for type of slot.

For (a) slot use 1. as an input

For (b) slot use 2. as an input

For (c) slot use 3. as an input

For (d) slot use 4. as an input

Type 5. is not a slot but instead a particular situation for an open slot where the winding has only one conductor per slot.

(22) b_0, b_1, b_2, b_3, b_s, h_0, h_1, h_2, h_3, h_s, h_t, h_w

ALL SLOT DIMENSIONS - Given in inches per Figure 1, Page . Where the dimension does not apply to the slot being used, insert 0. on input sheet.

FOR TYPE (C) SLOT

$$b_s = \frac{(b_1)+(b_2)}{2} = \frac{(22)+(22)}{2}$$

(23) Q

STATOR SLOTS - Number of.

(24) h_c

DEPTH BELOW SLOTS - The depth of the stator core below the slots.

Due to mechanical strength reasons, h_c should never be less than 70% of h_s.

$$h_c = \frac{(D) - \left[(d) + 2(h_s)\right]}{2} = \frac{(12) - \left[(11) + 2(22)\right]}{2}$$

(25) q

SLOTS PER POLE PER PHASE

$$q = \frac{(Q)}{(P)\ (m)} = \frac{(23)}{(6)\ (5)}$$

(26) τ_s

STATOR SLOT PITCH

$$\tau_s = \frac{\pi(d)}{Q} = \frac{\pi(11)}{(23)}$$

(27) $\tau_{s1/3}$

STATOR SLOT PITCH - 1/3 distance up from narrowest section. For slot (a), (b), (c), and (e)

$$\tau_{s1/3} = \frac{\pi\left[(d) + .66(h_s)\right]}{(Q)} = \frac{\pi\left[(11) + .66\ (22)\right]}{(23)}$$

For slot (d)

$$\frac{\pi\left[(d) + 2(h_0) + 1.32(b_s)\right]}{(Q)} =$$

$$\frac{\pi\left[(11) + 2(22) + 1.32(22)\right]}{(23)}$$

(28) --

TYPE OF WINDING - Record whether the connection is "wye" of "delta". For "wye" conn use 1. for input. For "delta" use 0. for input.

(29) --

TYPE OF COIL - Record whether random wound or formed coils are used. For random wound coils use 0. for input. For formed coils use 1. for input.

(30)	n_S	CONDUCTORS PER SLOT - The actual number of conductors per slot. For random wound coils use a space factor of 75% to 80%. Where space factor is the percent of the total slot area that is available for insulated conductors after all other insulation areas have been subtracted out.
(31)	Y	THROW - Number of slots spanned. For example, with a coil side in slot 1 and the other coil side in slot 10, the throw is 9.
(31a)		PER UNIT OF POLE PITCH SPANNED - Ratio of the number of slots spanned to the number of slots in a pole pitch. This value must be between 1.0 and 0.5 to satisfy the limits of this program. $= \frac{(Y)}{(m)\ (q)} = \frac{(31)}{(5)\ (25)}$
(32)	C	PARALLEL PATHS, No. of - Number of parallel circuits per phase.
(33)	--	STRAND DIA. OR WIDTH - In inches. For round wire, use strand diameter. For rectangular wire, use strand width. This must be the largest of the two dimensions given for a ractangular wire.
(34)	N_{ST}	NUMBER OF STRANDS PER CONDUCTOR IN DEPTH - Applies to rectangular wire. In order to have a more flexible conductor and reduce eddy current loss, a stranded conductor is often used. For

example, when the space available for one conductor is .250 width x .250 depth, the actual conductor can be made up of 2 or 3 strands in depth as shown

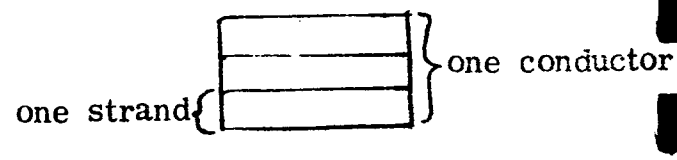

For a more detailed explanation refer to section titled "Effective Resistance and Eddy Factor" in the Derivations in Appendix.

(34a) N'_{ST} NUMBER OF STRANDS PER CONDUCTOR - This number applies to the strands in depth and/or width and is used in calculating the conductor area. Item (34) is different in that it deals with strands in depth only and is used in calculating eddy factors.

(35) d_b DIAMETER OF BENDER PIN - in inches - This pin is used in forming coils. Use .25 inch for stator O.D. $<$ 8 inches use .50 inches for stator O.D. $>$ 8 inches.

(36) ℓ_{e2} COIL EXTENSION BEYOND CORE in Inches - Straight portion of coil that extends beyond stator core.

(37) h_{ST} HEIGHT OF UNINSULATED STRAND in Inches - This value is the vertical height of the strand and is used in eddy factor calculations. Set this value = 0 for round wire.

(38) h'_{ST} DISTANCE BETWEEN CENTERLINES OF STRANDS IN DEPTH in inches.

(39) -- STATOR COIL STRAND THICKNESS in inches - For rectangular conductors only. For round wire insert 0. on input sheet. This must be the narrowest dimension of the two dimensions given for a rectangular wire.

(40) τ_{SK} SKEW - Stator slot skew in inches at stator I.D.

(41) τ_P POLE PITCH in inches.

$$\tau_P = \frac{\pi(d)}{(P)} = \frac{\pi(11)}{(6)}$$

(42) K_{SK} SKEW FACTOR - The skew factor is the ratio of the voltage induced in the coils to the voltage that would be induced if there were no skew.

When $\tau_{SK} = 0$, $K_{SK} = 1$

$$K_{SK} = \frac{\sin\left[\frac{\pi(\tau_{SK})}{2(\tau_P)}\right]}{\frac{\pi(\tau_{SK})}{2(\tau_P)}} = \frac{\sin\left[\frac{\pi(40)}{2(41)}\right]}{\frac{\pi(40)}{2(41)}}$$

(42a) PHASE BELT ANGLE - Input

For phase belt angle = 60° insert 60 on input sheet.

For phase belt angle = 120° insert 120 on input sheet.

(43) K_d DISTRIBUTION FACTOR - The distribution factor is the ratio of the voltage induced in the coils to the voltage that would be induced if the windings

were concentrated in a single slot. See Table 2 for compilation of distribution factors for the various harmonics.

For 60° phase belt angle and q = integer when (42a) = 60 and (25) = integer.

$$K_d = \frac{\text{Sin } 30^{\circ}}{(q)\ \text{Sin}\left[30/(q)\right]} = \frac{\text{Sin } 30^{\circ}}{(25)\,\text{Sin}\left[30/(25)\right]}$$

For 60° phase belt angle and (q) $\neq$ integer = N/B reduced to lowest terms.

When (43a) = 1 and (25) $\neq$ integer = N/B reduced to lowest terms

$$K_d = \frac{\text{Sin } 30^{\circ}}{(N)\ \text{Sin}\left[30/(N)\right]} = \frac{\text{Sin } 30^{\circ}}{(43)\ \text{Sin}\left[30/(43)\right]}$$

For 120° phase belt angle and (q) = integer

When (43a) = 120 and (25) = integer

$$K_d = \frac{\text{Sin } 60^{\circ}}{2(q)\ \text{Sin}\left[30/(q)\right]} = \frac{\text{Sin } 60^{\circ}}{2(25)\ \text{Sin}\left[30/(25)\right]}$$

For 120° phase belt angle and q $\neq$ integer

When (43a) = 120 and (25) $\neq$ integer = N/B reduced to lowest terms

$$K_d = \frac{\text{Sin } 60^{\circ}}{2(N)\ \text{Sin}\left[30/(N)\right]} = \frac{\text{Sin } 60^{\circ}}{2(43)\ \text{Sin}\left[30/(43)\right]}$$

(44) K_P

PITCH FACTOR - The ratio of the voltage induced in the coil to the voltage that would be induced in a full pitched coil. See Table 1 for compilation of the pitch factors for the various harmonics.

$$K_P = \sin\left[\frac{(Y)}{(m)(q)} \times 90^o\right] = \sin\left[\frac{(31)}{(5)(25)} \times 90^o\right]$$

(45) n_e

TOTAL EFFECTIVE CONDUCTORS - The actual number of effective series conductors in the stator winding taking into account the pitch and skew factors but not allowing for the distribution factor.

$$n_e = \frac{(Q)(n_s)(K_P)(K_{SK})}{(C)} = \frac{(23)(30)(44)(42)}{(32)}$$

(46) a_c

CONDUCTOR AREA OF STATOR WINDING in $(\text{inches})^2$ - The actual area of the conductor taking into account the corner radius on square and rectangular wire. See the following table for typical values of corner radii

If (39) = 0 then $a_c = .25\pi(\text{Dia})^2 = .25\pi(33)^2$

If (39) $\neq$ 0 then $a_c = (N'_{ST})\left[(\text{strand width})(\text{strand depth}) - (.858\ r_c^2)\right] = (34a)\left[(33)(39) - (.858\ r_c^2)\right]$

where $.858\ r_c^2$ is obtained from Table V below.

(39)	(33) .188	.189 (33) .75	(33) .751
.050	.000124	.000124	.000124
.072	.000210	.000124	.000124
.125	.000210	.00084	.000124
.165	.000840	.00084	.003350
.225	.001890	.00189	.003350
.438	--	.00335	.007540
.688	--	.00754	.01340
--	--	.03020	.03020

TABLE V

(47) S_S

CURRENT DENSITY - Amperes per square inch of stator conductor

$$S_S = \frac{(I_{PH})}{(C)(a_c)} = \frac{(8)}{(32)(46)}$$

(48) L_E

END EXTENSION LENGTH in inches - Can be an input or output.

For L_E to be output, insert 0. on input sheet.

For L_E to be input, calculate per following:

When (29) = 0. then:

$$L_E = .5 + \frac{K_T \pi (Y)\left[(d)+(h_s)\right]}{Q} = .5 + \frac{\begin{bmatrix} 1.3 \text{ If } (6) = 2 \\ 1.5 \text{ If } (6) = 4 \\ 1.7 \text{ If } (6) = 4 \end{bmatrix} \pi (31)\left[(11)+(22)\right]}{(23)}$$

When (29) = 1. then:

$$L_E = 2\ell_{e2} + \pi\left[\frac{h_1}{2} + \text{dia}\right] + y\left[\frac{T_s^2}{\sqrt{T_s^2 - b_s^2}}\right]$$

$$= 2 \quad (36) + \pi\left[\frac{(22)}{2} + (35)\right] + (31)\left[\frac{(26)^2}{\sqrt{(26)^2 - (22)^2}}\right]$$

(49) ℓ_t

1/2 MEAN TURN - The average length of one conductor in inches.

$$\ell_t = (\ell) + (L_E) = (13) + (44)$$

(50) $X_s{}^oC$

STATOR TEMP ^oC - Input temp at which F.L. losses will be calculated. No load losses and cold resistance will be calculated at 20^oC.

(51) ρ_s

RESISTIVITY OF STATOR WINDING - In micro ohm-inches @ 20°C. If tables are available using units other than that given above, use Table VI for conversion to ohm-inches.

ρ	ohm-cm	ohm-in	ohm-cir mil/ft
1 ohm-cm =	1.000	0.3937	6.015×10^{6}
1 ohm-in =	2.540	1.000	1.528×10^{7}
1 ohm-cir mil/ft =	1.662×10^{-7}	6.545×10^{-8}	1.000

TABLE VI
Conversion Factors for Electrical Resistivity

(52) $\rho_{S(hot)}$

RESISTIVITY OF STATOR WINDING - Hot at X_s ^{o}C in micro ohm-inches

$$\rho_{S(hot)} = (\rho_S)\left[\frac{(X_s\,^{o}C) + 234.5}{254.5}\right] = (51)\left[\frac{(50) + 234.5}{254.5}\right]$$

(53) $R_{SPH(cold)}$

STATOR RESISTANCE/PHASE - Cold @ 20°C in ohms

$$R_{SPH(cold)} = \frac{(\rho_s)(n_s)(Q)(\ell_t)}{(m)(a_c)(C)^2} \times 10^{-6} = \frac{(51)(30)(23)(49)}{(5)(46)(32)^2} \times 10^{-6}$$

(54) $R_{SPH(hot)}$

STATOR RESISTANCE/PHASE - Calculated @ X^{o}C in ohms

$$R_{SPH(hot)} = \frac{(\rho_s\ hot)(n_s)(Q)(\ell_t)}{(m)(a_c)(C)^2} \times 10^{-6} \frac{(52)(30)(23)(49)}{(5)(46)(32)^2} \times 10^{-6}$$

(55) $EF_{(top)}$

EDDY FACTOR TOP - The eddy factor of the top coil. Calculate this value at the expected operating temperature of the machine. For round wire $EF_{top} = 1$

$$EF_{top} = 1 + \left\{ .584 + \left[\frac{N_{st}^2 - 1}{16}\right]\left[\frac{h'_{st}\ell}{h_{st}\ell_t}\right]^2 \right\} 3.35 \times 10^{-3} \left[\frac{(h_{st})(n_s)(f)(a_c)}{(b_s)(\rho_{S\,hot})}\right]^2$$

$$= 1 + \left\{ .584 + \left[\frac{(34)^2 - 1}{16}\right]\left[\frac{(38)(13)}{(37)(49)}\right]^2 \right\} 3.35 \times 10^{-3} \left[\frac{(37)(30)(5a)(46)}{(22)(52)}\right]^2$$

(56) EF (bot)

EDDY FACTOR BOTTOM - The eddy factor of the bottom coil at the expected operating temperature of the machine. For round wire $EF_{(bot)} = 1$

$$EF_{(bot)} = (EF_{(top)}) - 1.677 \left[\frac{(h_{st})(n_s)(f)(a_c)}{(b_s)(\rho_{S\,hot})}\right]^2 \times 10^{-3}$$

$$= (55) - 1.677 \left[\frac{(37)(30)(5a)(46)}{(22)(52)}\right] 10^{-3}$$

(57) b_{tm}

STATOR TOOTH WIDTH 1/2 way down tooth in inches - For slots type (a), (b), (d) and (e), Figure I

$$b_{tm} = \frac{\pi\left[(d) + (h_s)\right]}{(Q)} - (b_s) = \frac{\pi\left[(11) + (22)\right]}{(23)} - (22)$$

For slot type (c), Figure I

$$b_{tm} = \frac{\pi\left[(d) + 2(h_s)\right]}{(Q)} - (b_3) = \frac{\pi\left[(11) + 2(22)\right]}{(23)} - (22)$$

For slot type (c), Figure I

$$b_{tm} = \frac{\pi[(d) + 2(h_s)]}{(Q)} - (b_3) = \frac{\pi[(11) + 2(22)]}{(23)} - (2$$

(57a) b_t 1/3 <u>STATOR TOOTH WIDTH</u> 1/3 distance up from narrowest section

For slots type (a), (b) and (e)

$$b_t\ 1/3 = (\tau_s\ 1/3) - (b_s) = (27) - (22)$$

For slot type (c)

$$b_t\ 1/3 = b_{tm} = (57)$$

For slot type (d)

$$b_t\ 1/3 = (\tau_{1/3}) - \frac{2\sqrt{2}}{3}(b_s) = (27) - .94\ (22)$$

(58) b_t <u>TOOTH WIDTH AT STATOR I.D.</u> in inches -

For partially closed slot

$$b_t = \frac{\pi(d)}{(Q)} - b_0 = \frac{\pi(11)}{(23)} - (22)$$

For open slot

$$b_t = \frac{\pi(d)}{(Q)} - b_s = \frac{\pi(11)}{(23)} - (22)$$

(59) g <u>MAIN AIR GAP</u> in inches

(59a) g_2 <u>AUXILIARY AIR GAP</u> in inches

(60) C_X **REDUCTION FACTOR** - Used in calculating conductor permeance and is dependent on the pitch and distribution factor. This factor can be obtained from Graph 1 with an assumed K_d of .955 or calculated as shown

$$C_X = \frac{(K_X)}{(K_P)^2 (K_d)^2} = \frac{(61)}{(44)^2 (43)^2}$$

(61) K_X **FACTOR TO ACCOUNT FOR DIFFERENCE** in phase current in coil sides in same slot

For 60° phase belt winding, ie when (42a) = 60

$$K_X = 1/4\left[\frac{3(y)}{(m)(q)} + 1\right] \text{ where } 2/3 \leq (y)/(m)(q) \leq 1.0$$

$$K_X = 1/4\left[\frac{3(31)}{(5)(25)} + 1\right] \text{ where } 2/3 \leq (31a) \leq 1.0$$

OR $$K_X = 1/4\left[\frac{6(y)}{(m)(q)} - 1\right] \text{ where } 1/2 \leq (31a) \leq 2/3$$

$$K_X = 1/4\left[\frac{6(31)}{(5)(25)} - 1\right] \text{ where } 1/2 \leq (31a) \leq 2/3$$

For 120° phase belt winding, ie when (42a) = 120

$$K_X = .75 \text{ when } 2/3 \leq (y)/(m)(q)$$

$$K_X = .75 \text{ when } 2/3 \leq (31a)$$

OR $$K_X = .05\left[\frac{24(y)}{(m)(q)} - 1\right] \text{ where } 1/2 \leq \frac{(y)}{(m)(q)} \leq 2/3$$

$$K_X = .05\left[\frac{24(31)}{(3)(25)} - 1\right] \text{ where } 1/2 \leq (31a) \leq 2/3$$

(62) λ_L **CONDUCTOR PERMEANCE** - The specific permeance for the portion of the stator current that is embedded in the iron. This permeance depends upon the configuration of the slot.

(a) FOR OPEN SLOTS

$$\lambda_i = (C_X)\frac{20}{(m)(q)}\left[\frac{(h_2)}{(b_s)} + \frac{(h_1)}{3(b_s)} + \frac{(b_t)^2}{16(\tau_s)(g)} + \frac{.35(b_t)}{(\tau_s)}\right]$$

$$\lambda_i = (60)\frac{20}{(5)(25)}\left[\frac{(22)}{(22)} + \frac{(22)}{3(22)} + \frac{(58)^2}{16(26)(59)} + \frac{.35(58)}{(26)}\right]$$

(b) For partially closed slots with constant slot width

$$\lambda_i = (C_X)\frac{20}{(m)(q)}\left[\frac{(h_o)}{(b_o)} + \frac{2(h_t)}{(b_o) + (b_s)} + \frac{(h_w)}{(b_s)} + \frac{(h_1)}{3(b_s)} + \frac{(b_t)^2}{16(\tau_s)(g)} + \frac{.35(b_t)}{(\tau_s)}\right]$$

$$\lambda_i = (60)\frac{20}{(5)(25)}\left[\frac{(22)}{(22)} + \frac{2(22)}{(22) + (22)} + \frac{(22)}{(22)} + \frac{(22)}{3(22)} + \frac{(58)^2}{16(26)(59)} + \frac{.35(58)}{(26)}\right]$$

(c) For partially closed slots (tapered sides)

$$\lambda_i = (C_X)\frac{20}{(m)(q)}\left[\frac{(h_o)}{(b_o)} + \frac{2(h_t)}{(b_o) + (b_1)} + \frac{2(h_w)}{(b_1)+(b_2)} + \frac{(h_1)}{3(b_2)} + \frac{(b_t)^2}{16(\tau_s)(g)} + \frac{.35(b_t)}{(\tau_s)}\right]$$

$$\lambda_i = (60)\frac{20}{(5)(25)}\left[\frac{(22)}{(22)} + \frac{2(22)}{(22) + (22)} + \frac{2(22)}{(22)+(22)} + \frac{(22)}{3(22)} + \frac{(58)^2}{16(26)(59)} + \frac{.35(58)}{(26)}\right]$$

(d) For round slots

$$\lambda_i = (C_X)\frac{20}{(m)(q)}\left[.62 + \frac{(h_o)}{(b_o)}\right]$$

$$\lambda_i = (60)\frac{20}{(5)(25)}\left[.62 + \frac{(22)}{(22)}\right]$$

(e) For open slots with a winding of one conductor per slot

$$\lambda_i = (C_X)\frac{20}{(m)(q)}\left[\frac{(h_2)}{(b_s)} + \frac{(h_1)}{3(b_s)} + .6 + \frac{(g)}{2(\tau_s)} + \frac{(\tau_s)}{4(g)}\right]$$

$$\lambda_i = (60)\frac{20}{(5)(25)}\left[\frac{(22)}{(22)} + \frac{(22)}{3(22)} + .6 + \frac{(59)}{2(26)} + \frac{(26)}{4(59)}\right]$$

(63) K_E **LEAKAGE REACTIVE FACTOR** for end turn

$$K_E = \frac{\text{Calculated value } (L_E)}{\text{Value } (L_E) \text{ from Graph 1}} \quad \text{(For machines where (11)} > 8''\text{)}$$

where L_E = (48) and abscisa of Graph 1 = $(\gamma)(\tau_s)$ = (31)(26)

$$K_E = \sqrt{\frac{\text{Calculated value of } (L_E)}{\text{Value } (L_E) \text{ from Graph 1}}} \quad \text{(For machines where (11)} < 8''\text{)}$$

(64) λ_E **END WINDING PERMEANCE** - The specific permeance for the end extension portion of the stator winding

$$\lambda_E = \frac{6.28(K_E)}{(\ell)(K_d)^2}\left[\frac{\phi_E L_E}{2n}\right] = \frac{6.28(63)}{(13)(43)^2}\left[\frac{Q_E L_E}{2n}\right]$$

The term $\left[\frac{\phi_E L_E}{2n}\right]$ is obtained from Graph 1.

The symbols used in this (term) do not apply to those of this design manual. Reference information for the symbol origin is included on Graph 1.

(65) -- **WEIGHT OF COPPER** - The weight of stator copper in lbs.

#'s copper = $.321(n_s)(Q)(a_c)(\ell_t)$ = .321(30)(23)(46)(49)

NOTE: This answer is given in lbs. based on density of copper. If any other material is used, the answer on output sheet can be converted by the designer by multiplying by the ratio of densities.

(66) -- **WEIGHT OF STATOR IRON** - in lbs.

$$\#\text{'s iron} = .283\left\{(b_{tm})(Q)(\ell_s)(h_s) + \pi\left[(D) - (h_c)\right](h_c)(\ell_s)\right\}$$

$$.283\left\{(57)(23)(17)(22) + \pi\left[(12) - (24)\right](24)(17)\right\}$$

(67) K_s **CARTER COEFFICIENT**

$$K_s = \frac{(\tau_s)\left[5(g) + (b_s)\right]}{(\tau_s)\left[5(g) + (b_s)\right] - (b_s)^2} \quad \text{(For open slots)}$$

$$K_s = \frac{(26)\left[5(59) + (22)\right]}{(26)\left[5(59) + (22)\right] - (22)^2}$$

$$K_s = \frac{\tau_s\left[4.44(g) + .75(b_o)\right]}{\tau_s\left[4.44(g) + .75(b_o)\right] - (b_o)^2} \quad \text{(For partially closed slots)}$$

$$K_s = \frac{(26)\left[4.44(59) + .75(22)\right]}{(26)\left[4.44(59) + .75(22)\right] - (22)^2}$$

(68) -- MAIN AIR GAP AREA - The area of the gap surface at the stator bore

$$\text{Gap Area} = \pi(d)(\ell) = \pi(11)(13)$$

(69) g_e **EFFECTIVE AIR GAP (MAIN)**

$$g_e = (K_s)(g) = (67)(59)$$

(70) A_{g2} **AREA OF AUXILIARY AIR GAP**

$$A_{g2} = \pi(d_{g2})(\ell_{g2}) = \pi(78)(78)$$

(71) C_1 THE RATIO OF MAXIMUM FUNDAMENTAL of the field form to the actual maximum of the field form - This term can be an input or output. For C_1 to be output insert 0. on input sheet. For C_1 to be input, determine C_1 as follows:

For pole heads with only one radius, C_1 is obtained from curve #4. The abscissa is "pole embrace" (α) = (77). The graphical flux plotting method of determining C_1 is explained in the section titled "Derivations" in the Appendix.

(72) C_W WINDING CONSTANT - The ratio of the RMS line voltage for a full pitched winding to that which would be introduced in all the conductors in series if the density were uniform and equal to the maximum value. This value can be an input or output. For C_W to be an output, insert 0. on input sheet. For C_W to be an input, calculate as follows:

$$C_W = \frac{(E)(C_1)(K_d)}{\sqrt{2}\,(E_{PH})(m)} = \frac{(3)(71)(43)}{\sqrt{2}\,(4)(5)}$$

Assuming $K_d = .955$, then $C_W = .225\ C_1$ for three phase delta machines and $C_W = .390\ C_1$ for three phase star machines.

(73) C_P <u>POLE CONSTANT</u> - The ratio of the average to the maximum value of the field form. This ratio can be an input or output. For C_P to be an output, insert 0. on input sheet. For C_P to be an input, determine as follows:

For pole heads with more than one radius C_P is calculated from the same field form that was used to determine C_1, and this method is described in the section titled "Derivations" in the Appendix. For pole heads with only one radius C_P is obtained from curve #4. Note the correction factor at the top of the curve.

(74) C_M <u>DEMAGNETIZING FACTOR</u> - direct axis - This factor can be an input or output. For C_M to be an output, insert 0. on input sheet. For C_M to be an input, determine as follows:

$$C_M = \frac{(\alpha)\pi + \sin[(\alpha)\pi]}{4\sin[(\alpha)\ \pi/2]} = \frac{(77)\pi + \sin[(77)\pi]}{4\sin[(77)\ \pi/2]}$$

C_M can also be obtained from curve 9.

(75) C_q CROSS MAGNETIZING FACTOR - quadrature axis - This factor can be an input or output. For C_q to be an output, insert 0. on input sheet. For C_q to be an input, determine as follows:

$$C_q = \frac{1/2\cos[(\alpha)\ \pi/2] + (\alpha)\pi - \sin[(\alpha)\pi]}{4\sin[(\alpha)\ \pi/2]}$$

$$= \frac{1/2\cos[(77)\ \pi/2] + (77)\pi - \sin[(77)\pi]}{4\sin[(77)\ \pi/2]}$$

VALID FO CONCENTRI POLES.

C_q can also be obtained from curve 9.

(76) -- POLE DIMENSIONS LOCATIONS

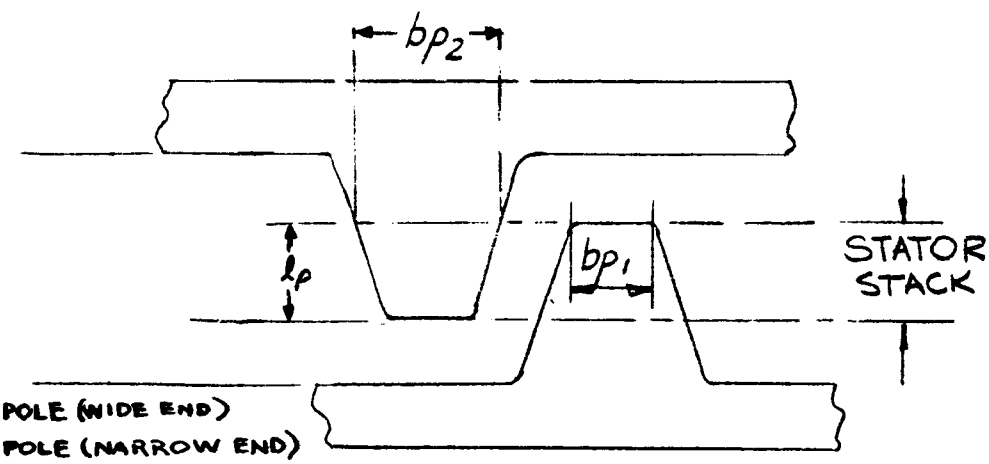

b_{p2} = WIDTH OF POLE (WIDE END)
b_{p1} = WIDTH OF POLE (NARROW END)
t_{p2} = THICKNESS OF POLE (WIDE END)
t_{p1} = THICKNESS OF POLE (NARROW END)
ℓ_p = POLE LENGTH

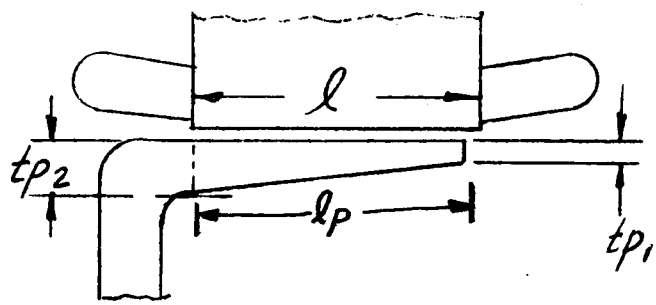

FIG 2

(77) α **POLE EMBRACE**

$$\alpha = \frac{(b_{p1}) + (b_{p2})}{2(\tau_p)} = \frac{(76) + (76)}{(41)\ 2}$$

(77a) -- The next items deal with the calculation of rotor and stator leakage permeance. A number of illustrations are included to help identify and locate the actual path. The computer program is set up to handle permeance P_1, P_2, P_3, and P_4 in the following two ways:

1. P_1 through P_4 can be calculated by the computer. For this case insert 0.0 on the input sheet.
2. P_1 through P_4 can be calculated by the designer. For this case insert the actual calculated value on the input sheet.

Permeance P_5 and P_7 must be calculated by the designer and the calculated value must be inserted on the input sheet. This was done because of the number of locations possible for the field coil.

Permeance calculations P_1 through P_7 are all based on the equation $P = \frac{\mu(\text{area})}{\ell}$

Where μ = 3.19

Area = cross-sectional area perpendicular to

ℓ = length of permeance leakage path

Many of the equations used in this section are taken from Roter's "Electromagnetic Devices". Refer to the supplement at the end of this computer design manual for an explanation of each condition.

(78)	--	**ROTOR AND STATOR DIMENSIONS**

ℓ_{g2} = axial length of gap g_2

d_{y2} = diameter of yoke (end bell section) at narrowest section

d_{g2} = rotor diameter at auxiliary air gap

ℓ_y = effective length of yoke

t_{y2} = thickness of end bell section of yoke

t_y = thickness of housing section of yoke

FIG 3

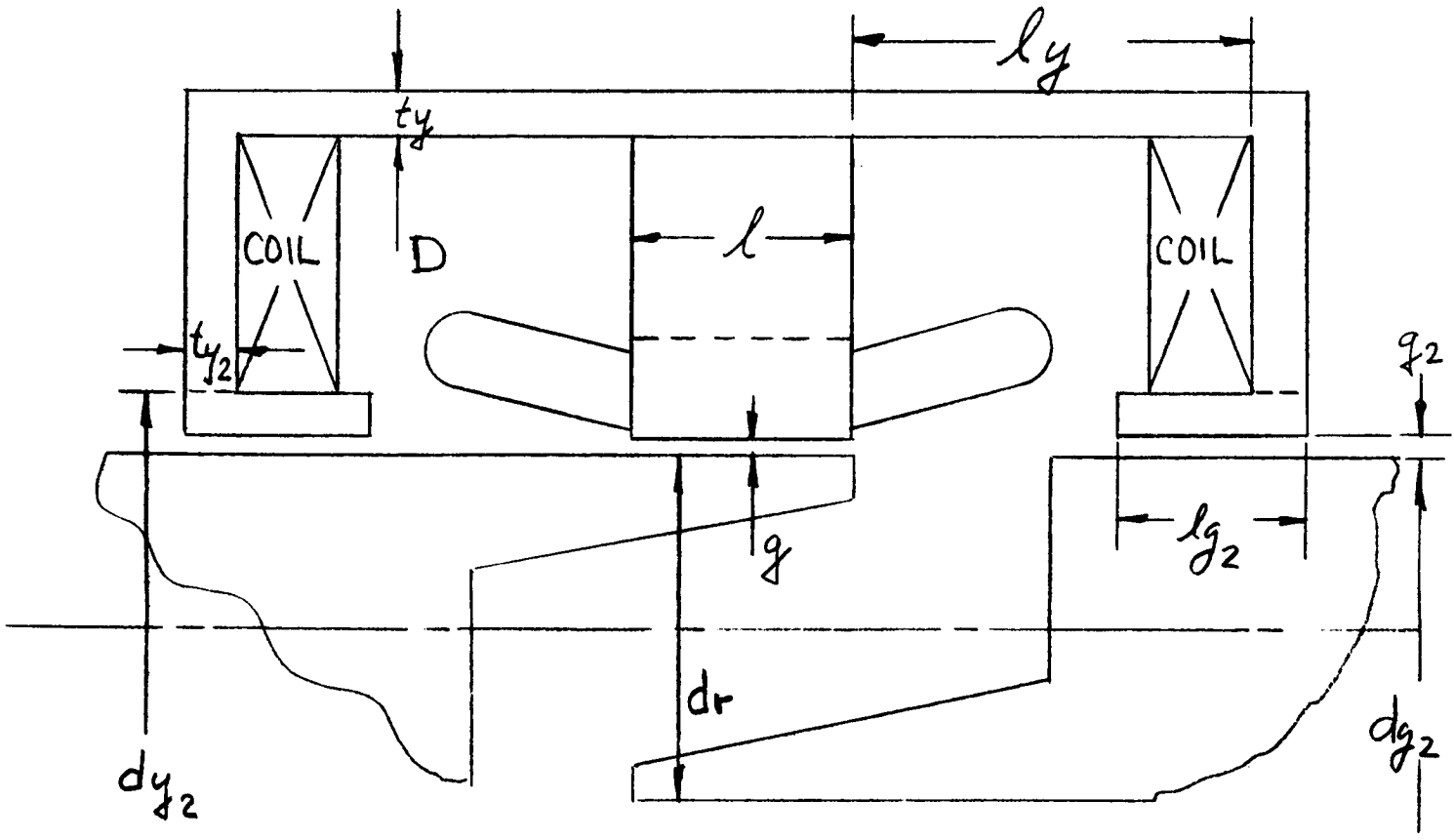

(79) a_p — POLE AREA - The effective cross-sectional area of the pole.

$$a_p = (b_{p2})(t_{p2}) = (76)(76)$$

(80) P_1 — POLE HEAD END LEAKAGE - This can be either 0.0 or the actual value if available. Refer to Item (77a) for explanation. See Figure 4 for location.

$$P_1 = \frac{3.19\ (b_{p1})(t_{p1})}{\ell_1} = \frac{3.19\ (76)(76)}{(80a)}$$

(80a) ℓ_1 — ℓ_1 = length of permeance path 1. Must be given on input sheet, when $P_1 = 0.0$.

(81) P_2 — POLE HEAD SIDE LEAKAGE - This input can be either 0.0 or the actual value if available. Refer to Item (77a) for explanation. See Figure 5 for location.

$$P_2 = \frac{3.19\left\{(\ell_p)\left[\frac{(t_{p2}) + (t_{p1})}{2}\right]\right\}}{\ell_2} = \frac{3.19\left\{(76)\left[\frac{(76) + (76)}{2}\right]\right\}}{(81a)}$$

(81a) ℓ_2 — LENGTH OF PERMEANCE PATH 2

$$\ell_2 = \tau_p - \left[\frac{(b_{p1}) + (b_{p2})}{2}\right] = (41) - \left[\frac{(76) + (76)}{2}\right]$$

(82) P_3 <u>POLE BODY END LEAKAGE</u> - This input can be either 0.0 or the actual value if available. Refer to Item (77a) for explanation. See Figure 6 for location.

$$*P_3 = \frac{6.28}{\pi}\left[\frac{3(b_{p1}) + (b_{p2})}{4}\right] \ell_n \frac{(r_3)}{(r_4)} = \frac{6.28}{\pi}\left[\frac{3(76) + (76)}{4}\right] \ell_n \frac{(82a)}{(82b)}$$

* The formula for P_3 is taken from the supplement at the end of this computer design manual.

(82a) r_3 $r_3 = \ell_1 = (80a)$ = length of permeance path 1.

(82b) r_4 $r_4 = (\ell_1) - \frac{(\ell)}{2} = (80a) - \frac{(13)}{2}$

(83) P_4 POLE BODY SIDE LEAKAGE - This input can be either 0.0 or the actual value if available. Refer to Item (77a) for explanation. See Figure 7 for location.

When (6) > 4

$$*P_4 = \frac{3.19(\ell_p)}{\pi} \ell_n \left[1 + \frac{(b_{p1}) + (b_{p2})}{Z}\right]$$

$$= \frac{3.19(76)}{\pi} \ell_n \left[1 + \frac{(76) + (76)}{(83)}\right]$$

Where: $Z = T_p - \left[\frac{(b_{p1}) + (b_{p2})}{2}\right] = (41) - \left[\frac{(76) + (76)}{2}\right]$

When (6) < 4

$$*P_4 = \frac{3.19\ (\ell_p)}{\pi}\ \frac{3}{2}\ \ell_n \left[1 + \frac{(b_{p1}) + (b_{p2})}{(Z)}\right]$$

$$= \frac{3.19\ (76)}{\pi}\ \frac{3}{2}\ \ \ n \left[1 + \frac{(76) + (76)}{(83)}\right]$$

*The formula for P_4 is taken from the supplement at the end of this computer design manual.

(84) P_5 <u>COIL LEAKAGE PERMEANCE</u> - This permeance must be calculated by the designer and the calculated value must be inserted on the input sheet. Refer to Figure 8 & 9 which shows the various location of the coils. The formula to solve for P_5 will depend on the location of the coil. Use the supplement attached at the end of this program to find the proper formula.

(86) P_7 <u>STATOR TO FRAME AND ROTOR LEAKAGE PERMEANCE</u> Refer to Figure 8 & 9 for location. This permeance is actually broken down into three parts P_{71} leakage to coil; P_{72} leakage to shaft; P_{73} leakage to rotor pole. In this design manual, the three permeances are added and treated as a single leakage. The same condition applies

to P_7 as does to P_5. The designer must calculate P_7 and insert the calculated value on the input sheet. Refer to supplement for proper formula.

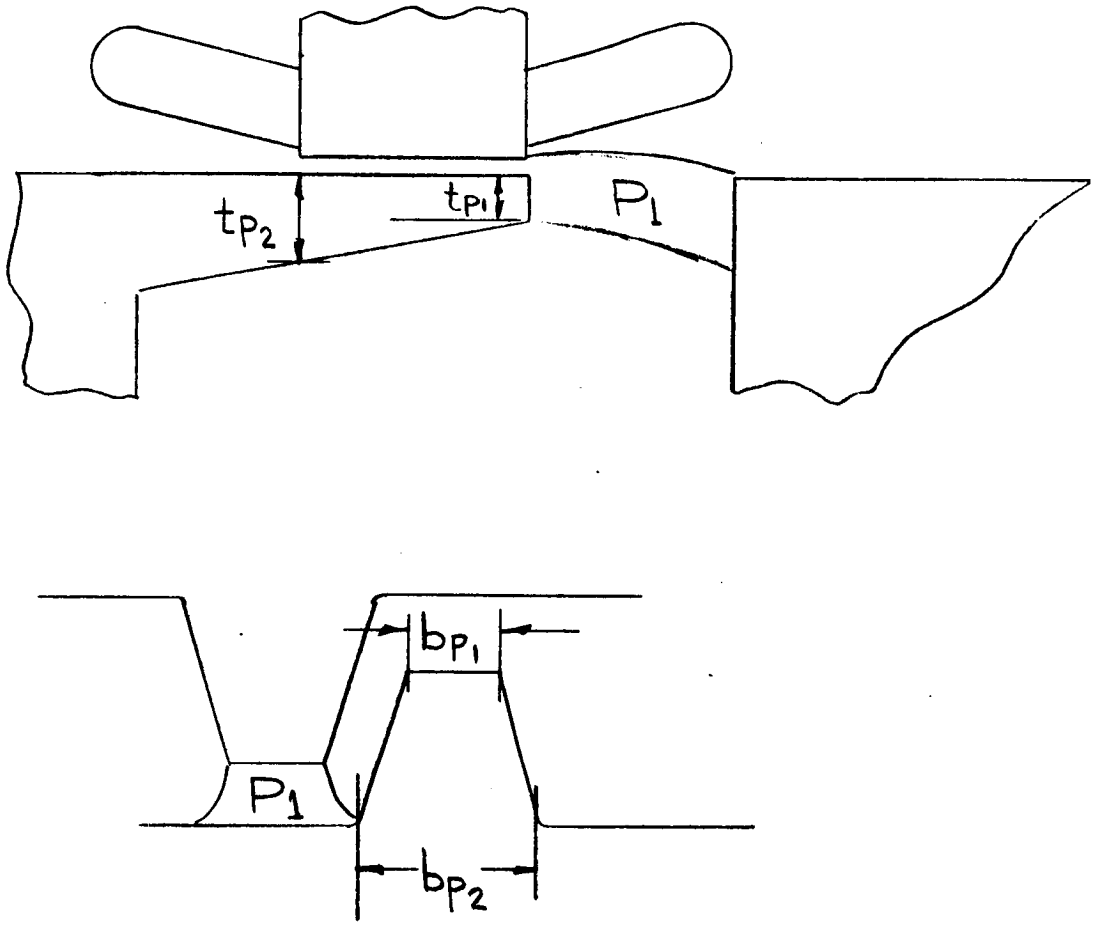

LEAKAGE PERMEANCE P_1

FIG 4

P_2 POLE HEAD SIDE LEAKAGE

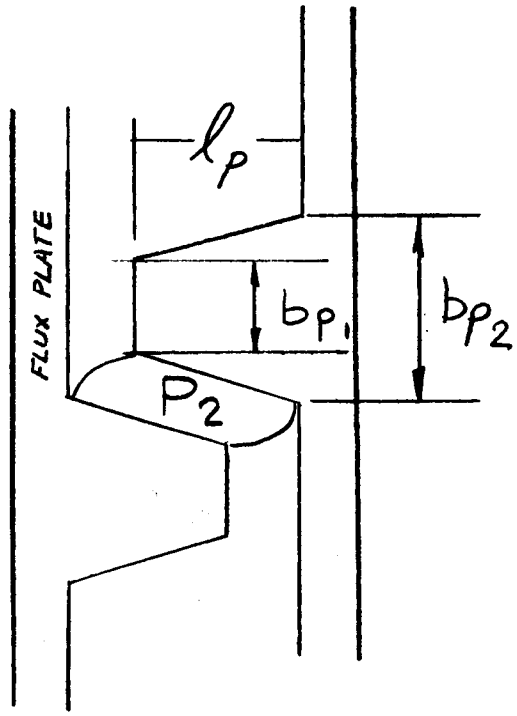

FIG 5

P_3 POLE BODY END LEAKAGE

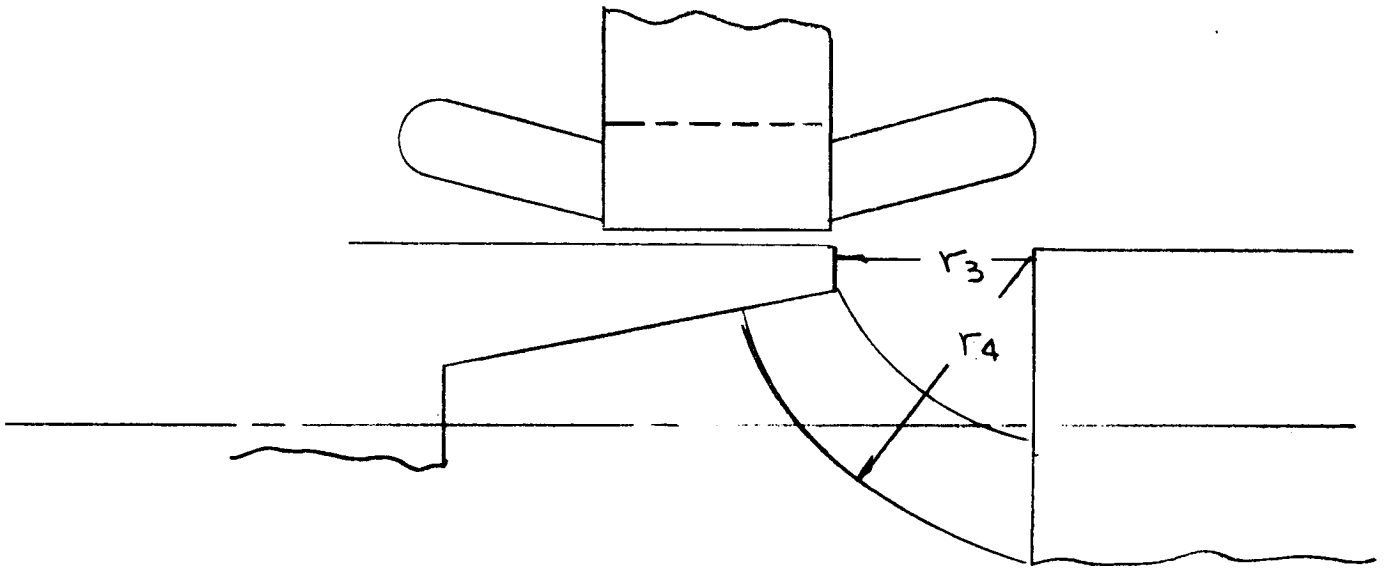

Fig 6

P_4 POLE BODY LEAKAGE

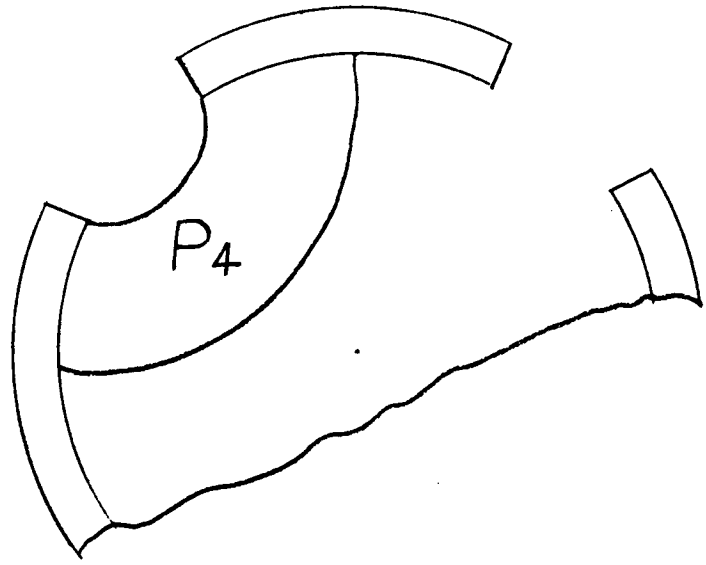

FIG 7

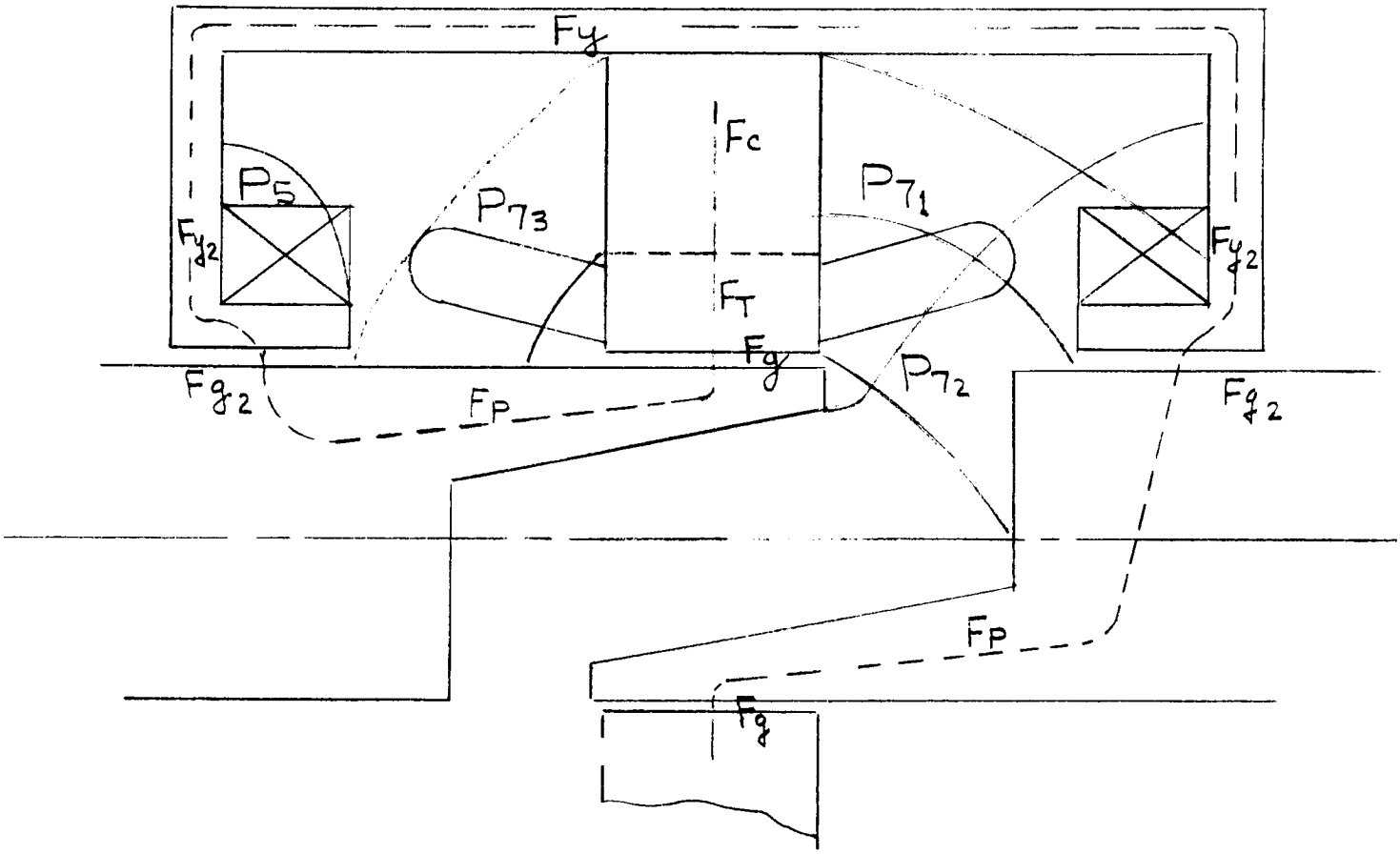
Fy
Fc
P5
P73
P71
Fy2
Fy2
FT
Fg
P72
Fg2
Fp
Fg2
Fp
Fg

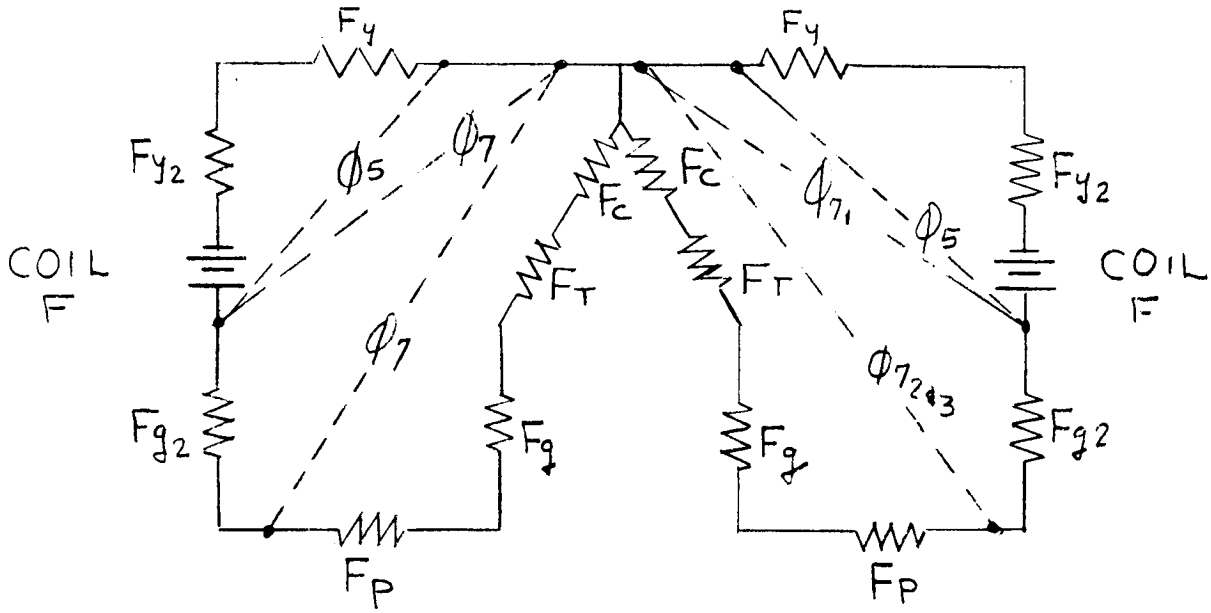
Fy
Fy
Fy2
Fy2
COIL F
COIL F
Fc
Fc
FT
FT
Fg2
Fg2
Fg
Fg
Fp
Fp

FIG 8

P_5 = Coil Leakage Permeance
P_7 = Stator Leakage Permeances

Fig 9

Design A

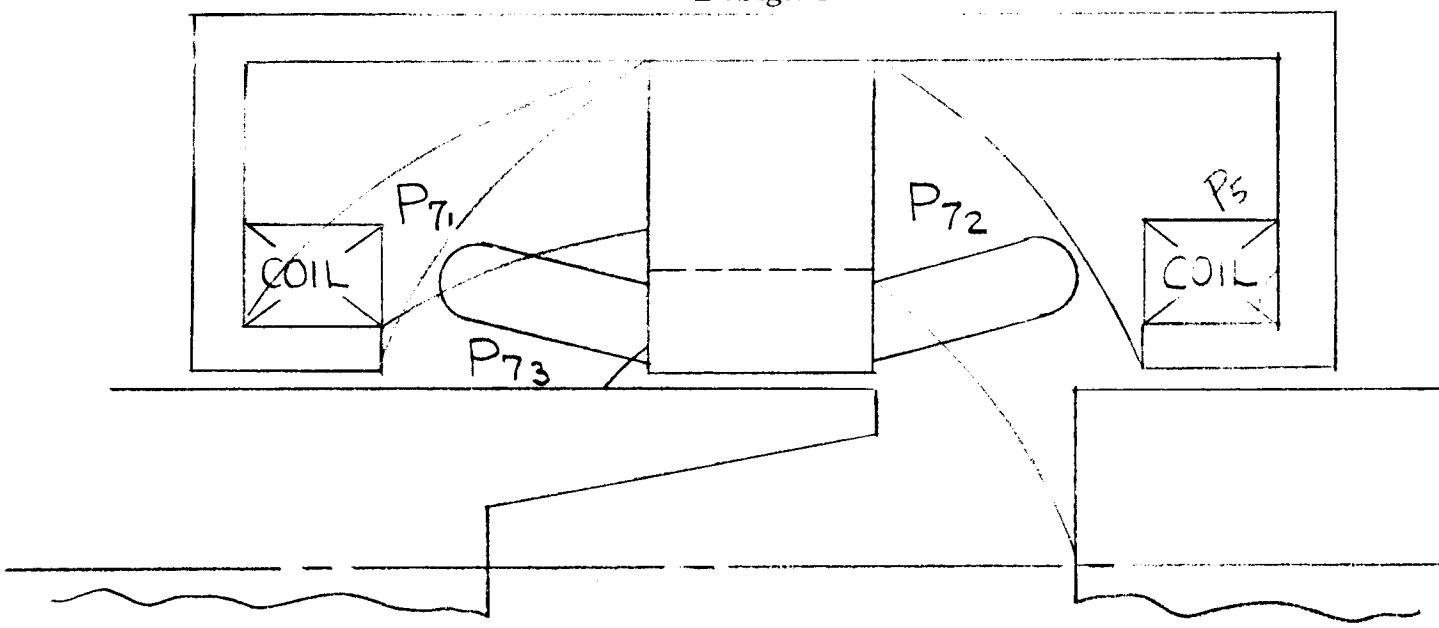

Design B

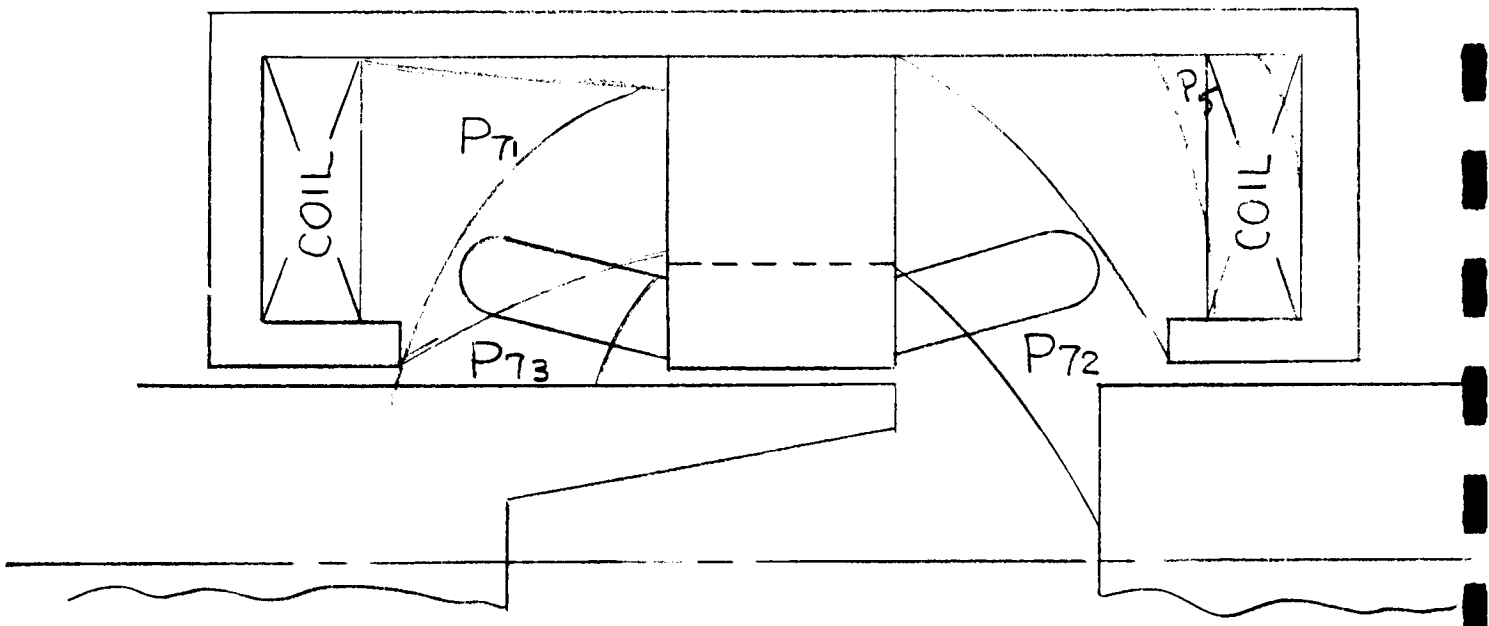

Design C

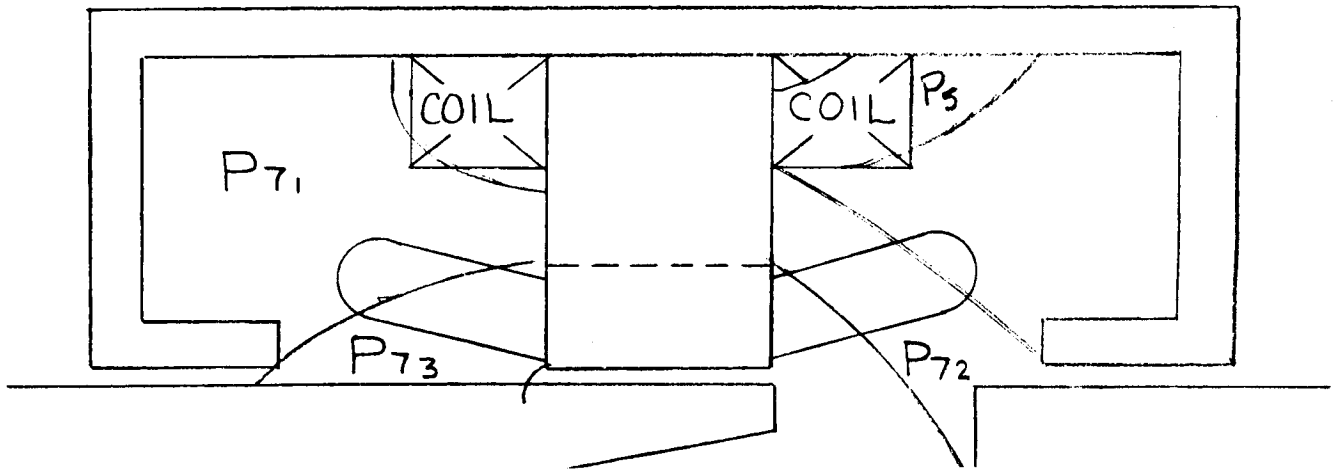

(87) -- The next set of calculations deals with the no load saturation. The equations as set up in this section can be used to calculate the complete no load saturation for any voltage. When the no load saturation data is required at various voltages insert 1. on the input sheet for "No Load Sat." The computer will then calculate the complete no load saturation curve at 80, 90, 100, 110, 120, 130, 140, 150, and 160% of rated volts. When the complete saturation data is not necessary, insert 0. on the input sheet and the computer will calculate the 100% volt data.

(88) ϕ_T TOTAL FLUX IN KILOLINES

$$\phi_T = \frac{6(E)10^6}{(C_W)(n_e)(RPM)} = \frac{6(3)10^6}{(72)(45)(17)}$$

(91) B_t TOOTH DENSITY in Kilolines/in^2 - The flux density in the stator tooth at 1/3 of the distance from the minimum section.

$$B_t = \frac{\phi_T}{(Q)(\ell_s)(b_{t\ 1/3})} = \frac{(88)}{(23)(17)(57a)}$$

(92) ϕ_P FLUX PER POLE in Kilolines

$$\phi_P = \frac{(\phi_T)(C_P)}{(P)} = \frac{(88)(73)}{(6)}$$

(94) B_c — CORE DENSITY in Kilolines/in^2 - The flux density in the stator core

$$B_c = \frac{(\phi_P)}{2(h_c)(\ell_s)} = \frac{(92)}{2(24)(17)}$$

(95) B_g — GAP DENSITY in Kilolines/in^2 - The maximum flux density in the air gap

$$B_g = \frac{(\phi_T)}{\pi(d)(\ell)} = \frac{(88)}{\pi(11)(13)}$$

(96) F_g — AIR GAP AMPERE TURNS - The field ampere turns per pole required to force flux across the air gap when operating at no load with rated voltage.

$$F_g = \frac{(B_g)(g_e)}{3.19} = \frac{(95)(69)}{3.19}$$

(97) F_T — STATOR TOOTH AMPERE TURNS

$$F_T = h_s \left[(\text{NI/in at density } (B_t))\right]$$

$$= (22) \left[\text{Look up on stator magnetization curve given in (18) @ density (91)}\right]$$

(98) F_c — STATOR CORE AMPERE TURNS

$$F_c = \left[\frac{\pi\left[(D) - (h_c)\right]}{4(P)}\right] \left[\text{NI/in @ density of } (B_c)\right]$$

$$= \left[\frac{\pi\left[(12) - (24)\right]}{4(6)}\right] \left[\text{Look up on stator magnetization curve given in (18) @ density (94)}\right]$$

(98a) F_S STATOR AMPERE TURNS, total

$$F_S = (F_T) + (F_c) = (97) + (98)$$

(99) ϕ_7 STATOR TO YOKE AND ROTOR LEAKAGE FLUX in Kilolines

The leakage flux from the stator to the yoke and rotor, all of which is considered crossing the auxiliary air gap. This is a simplification and only slightly pessimistic.

$$\phi_7 = \left[(F_P)+(F_g)+(F_T)+(F_c)\right] P_7 \times 10^{-3}$$

$$= \left[(104)+(96)+(97)+(98)\right] (86) \times 10^{-3}$$

The items to follow are to be calculated for variable loads. The first set of calculations are at no load. These calculations will then be repeated for 100% load. From then on any variation in load would be a repeat of the 100% load calculations with the proper percent load inserted.

(100) ϕ_ℓ ROTOR LEAKAGE FLUX - at no load

$$\phi_\ell = \left[2(F_g)+2(F_s)\right]\left[(P_1)+(P_2)+(P_3)+(P_4)\right] \times 10^{-3}$$

$$= \left[2(96)+2(98a)\right]\left[(80)+(81)+(82)+(83)\right] \times 10^{-3}$$

These surfaces are at almost
the same magnetic potential.

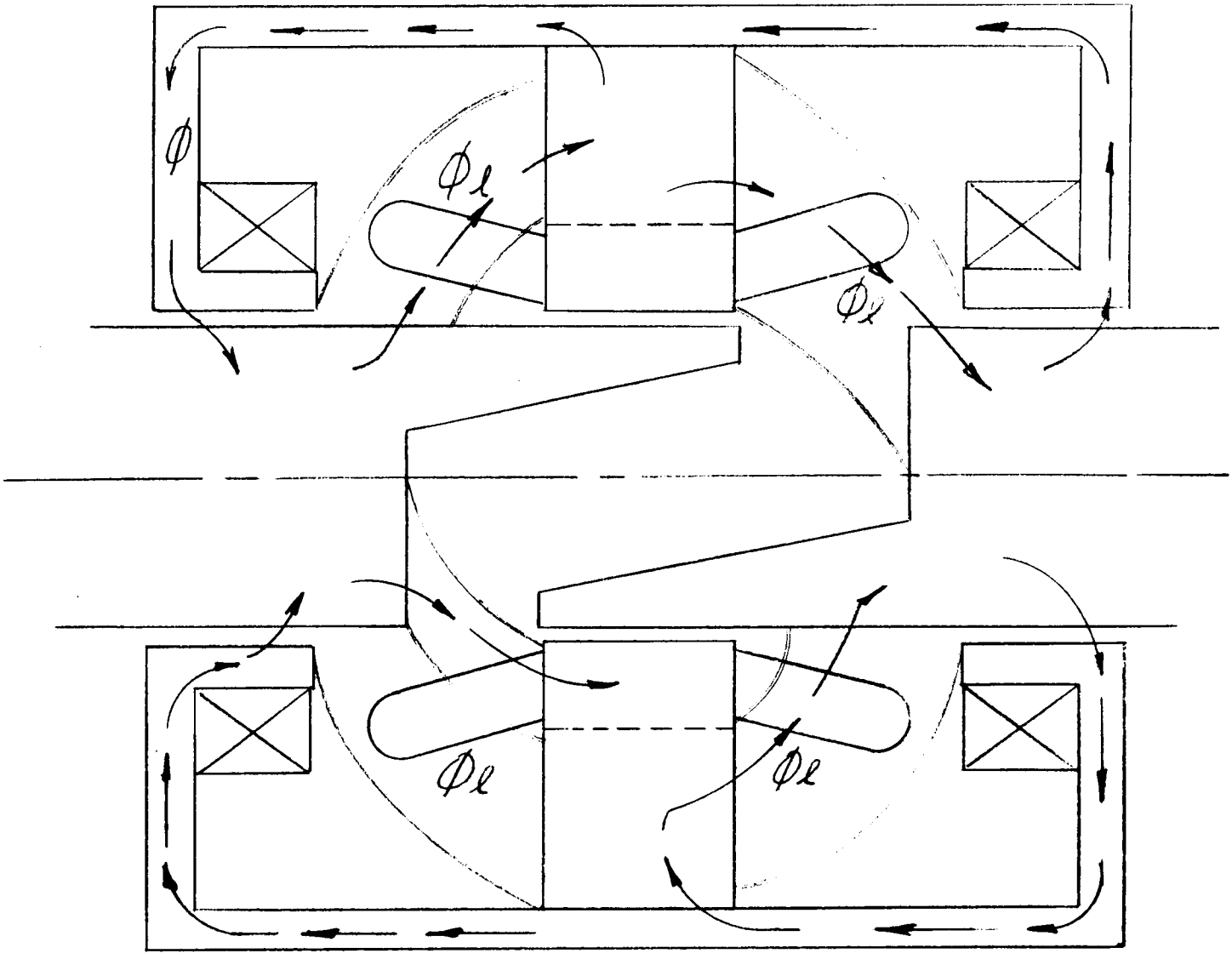

The above sketch shows the major leakage flux path from the stator. This leakage flux in the two-pole machine is not equal around the side of the stator and can cause a rotating couple.

FIG 10

(102) ϕ_{PT} <u>TOTAL FLUX PER POLE</u> - at no load

$$\phi_{PT} = \phi_P + \frac{\phi_\ell}{P} = (92) + \frac{(100)}{(6)}$$

(103) B_P <u>POLE DENSITY</u> - The apparent flux density at the base of the pole. Note that no provision is made in this manual for calculating the density in the flux plate. It is, therefore, important to remember not to restrict the flux area through this section.

$$B_P = \frac{(\phi_{PT})}{(a_P)} = \frac{(102)}{(79)}$$

(104) F_P

POLE AMPERE TURNS - at no load. The ampere turns per pole required to force the flux through the pole at no load rated voltage. The no load pole ampere turns per pole are calculated as the product of (ℓ_p) times the NI per inch at the density (B_P). Use magnetization curve submitted per Item (18) for rotor.

$$F_P = (\ell_p) \left[\text{NI/in @ density } (B_P) \right]$$

$$= (76) \left[\begin{array}{l} \text{Look up on rotor magnetization curve} \\ \text{given in (18) @ density (103)} \end{array} \right]$$

(108) ϕ_{g2}

FLUX CROSSING THE AUXILIARY AIR GAP in Kilolines

$$\phi_{g2} = (\phi_{PT}) \frac{(P)}{2} + (\phi_7)$$

$$= (102) \frac{(6)}{2} + (99)$$

(118) ϕ_5

COIL LEAKAGE FLUX

$$\phi_5 = P_5 \left[(F_c) + (F_T) + (F_g) + (F_P) + (F_{g2}) \right] \times 10^{-3}$$

$$= (84) \left[(98) + (97) + (96) + (104) + (123) \right] \times 10^{-3}$$

(122) B_{g2} AUXILIARY GAP DENSITY

$$B_{g2} = \frac{(\phi_{g2})}{(A_{g2})} = \frac{(108)}{(70)}$$

(123) F_{g2} AUXILIARY AIR GAP AMPERE TURNS

$$F_{g2} = \frac{(B_{g2})}{3.19}(g_2) \times 10^3 = \frac{(122)}{3.19}(59a) \times 10^3$$

(124) A_{y2} AREA OF END BELL PORTION OF YOKE at smallest section.

$$A_{y2} = \pi(d_{y2})(t_{y2}) = \pi(78)(78)$$

(124a) A_y AREA OF HOUSING PORTION OF YOKE

$$A_y = \pi\left[(D) + (t_y)\right](t_y)$$

$$= \pi\left[(12) + (78)\right](78)$$

(125) B_{y2} DENSITY IN END BELL SECTION OF YOKE at narrowest part

$$B_{y2} = \frac{(\phi_{g2}) + (\phi_5)}{A_{y2}} = \frac{(108) + (118)}{(124)}$$

(126) F_{y2} AMPERE TURN DROP IN END BELL SECTION OF YOKE

$$F_{y2} = \frac{\left[(D) - (d_{y2})\right]}{6}\left[\text{NI/inch at density } (B_{y2})\right]$$

$$= \frac{\left[(12) - (78)\right]}{6}\left[\begin{array}{l}\text{Look up on yoke magnetization} \\ \text{curve given in (18) @ density (125)}\end{array}\right]$$

(126a) B_y

DENSITY IN THE HOUSING SECTION OF YOKE

$$B_y = \frac{(\phi_{g2}) + (\phi_5)}{(A_y)} = \frac{(108) + (118)}{(124a)}$$

(126b) F_y

AMPERE TURN DROP IN HOUSING SECTION OF YOKE

Using 1/2 total length of housing.

$$F_y = \ell_y \left[\text{NI/inch at density } (B_y)\right]$$

$$= (78) \left[\begin{array}{l}\text{Look up on yoke magnetization curve given} \\ \text{in (18) at density (126a)}\end{array}\right]$$

(127) F_{NL}

TOTAL AMPERE TURN DROP PER COIL at no load

$$F_{NL} = \left[(F_g) + (F_T) + (F_c) + (F_y) + (F_{y2}) + (F_{g2}) + (F_P)\right]$$

$$= \left[(96) + (97) + (98) + (126b) + (126) + (123) + (104)\right]$$

(127a) I_{FNL}

FIELD AMPERES PER COIL at no load

$$I_{FNL} = \frac{(F_{NL})}{(N_F)} = \frac{(127)}{(146)}$$

(127b) E_F

FIELD VOLTS - at no load. This calculation is made with cold field resistance at 20°C for no load condition. (PER COIL)

$$E_F = (I_{FNL})(R_{f\ cold}) = (127a)(154)$$

(127c)	S_F	CURRENT DENSITY - at no load. Amperes per square inch of field conductor. $S_F = (I_{FNL})/(a_{cf}) = (127)/(153)$
(128)	A	AMPERE CONDUCTORS per inch - The effective ampere conductors per inch of stator periphery. This factor indicates the "specific loading" of the machine. Its value will increase with the rating and size of the machine and also will increase with the number of poles. It will decrease with increases in voltage or frequency. A is generally higher in single phase machines than in polyphase ones. $A = \frac{(I_{PH})(n_S)(K_P)}{(C)(\tau_S)} = \frac{(8)(30)(44)}{(32)(26)}$
(129)	X	REACTANCE FACTOR - The reactance factor is the quantity by which the specific permeance must be multiplied to give percent reactance. It is the percent reactance for unit specific permeance, or the percent of normal voltage induced by a fundamental flux per pole per inch numerically equal to the fundamental armature

ampere turns at rated current. Specific permeance is defined as the average flux per pole per inch of core length produced by unit ampere turns per pole.

$$X = \frac{100(A)(K_d)}{\sqrt{2}\,(C_1)(B_g) \times 10^3} = \frac{100(128)(43)}{\sqrt{2}\,(71)(95) \times 10^3}$$

(130) X_ℓ <u>LEAKAGE REACTANCE</u> - The leakage reactance of the stator for steady state conditions. When (5) = 3, calculate as follows:

$$X_\ell = X\left[(\Lambda_i) + (\Lambda_E)\right] = (129)\left[(62) + (64)\right]$$

In the case of two phase machines a component due to belt leakage must be included in the stator leakage reactance. This component is due to the harmonics caused by the concentration of the MMF into a small number of phase belts per pole and is negligible for three phase machines. When (5) = 2, calculate as follows:

$$\Lambda_B = \frac{0.1(d)}{(P)(g_e)}\left[\frac{\sin\left[\frac{3(y)}{(m)(q)}\right]90^o}{(K_P)}\right] = \frac{0.1(11)}{(6)(69)}\left[\frac{\sin\frac{3(31)}{(5)(25)}\,90}{(44)}\right]$$

$X_\ell = X\left[(\Lambda_i) + (\Lambda_E) + (\Lambda_B)\right]$ where $\Lambda_B = 0$ for 3 phase machines.

$$X = (129)\left[(62) + (64) + (130)\right]$$

(131) X_{ad} <u>REACTANCE</u> - direct axis - This is the fictitious reactance due to armature reaction in the direct axis.

$$X_{ad} = \frac{.9\,(n_e)(I_{PH})(C_m)(K_d)}{2(P)\left[(F_g + F_{g2})\right]} = \frac{.9\ (45)(8)(74)(43)}{2(6)\left[(96) + (123)\right]}$$

(132) X_{aq} <u>REACTANCE</u> - quadrature axis - This is the fictitious reactance due to armature reaction in the direct axis.

$$X_{aq} = \frac{(C_q)(X_{ad})}{(C_m)(C_1)} \times 100 = \frac{(71)(131)}{(74)(75)} \times 100$$

(133) X_d <u>SYNCHRONOUS REACTANCE</u> - direct axis - The steady state short circuit reactance in the direct axis.

$$X_d = (X_\ell) + (X_{ad}) = (130) + (131)$$

(134) X_q <u>SYNCHRONOUS REACTANCE</u> - quadrature axis - The steady state short circuit reactance in the quadrature axis.

$$X_q = (X_\ell) + (X_{aq}) = (130) + (132)$$

(145) V_r <u>PERIPHERAL SPEED</u> - The velocity of the rotor surface in feet per minute

$$V_r = \frac{\pi(d_r)(RPM)}{12} = \frac{\pi(11a)(7)}{12}$$

(146)	N_F	NUMBER OF FIELD TURNS
(146a)	N_{CO}	NUMBER OF FIELD COILS - One basic computer program is used for the single-coil and two-coil Lundell generators. This item is used in the computer program as a code for distinguishing one from the other.
(147)	ℓ_{tf}	MEAN LENGTH OF FIELD TURN
(148)	--	FIELD CONDUCTOR DIA OR WIDTH in inches
(149)	--	FIELD CONDUCTOR THICKNESS in inches - Set this item = 0. for round conductor.
(150)	$X_f{}^oC$	FIELD TEMP IN ^oC - Input temp at which full load field loss is to be calculated.
(151)	ρ_f	RESISTIVITY of field conductor @ 20^oC in micro ohm-inches. Refer to table given in Item (51) for conversion factors.
(152)	ρ_f (hot)	RESISTIVITY of field conductor at $X_f{}^oC$ $\rho_f\,(\text{hot}) = \rho_f \left[\frac{(X_f{}^oC) + 234.5}{254.5}\right] = (104)\left[\frac{(150) + 234.5}{254.5}\right]$
(153)	a_{cf}	CONDUCTOR AREA OF FIELD WDG - Calculate same as stator conductor area (46) except substitute (149) for (39) (148) for (33)

(154) R_f (cold)

COLD FIELD RESISTANCE @ 20°C per coil

$$R_f \text{ (cold)} = (\rho_f) \frac{(N_f)\ (\ell_{tf})}{(a_{cf})} = (151)\ \frac{(146)\ (147)}{(153)}$$

(155) R_f (hot)

HOT FIELD RESISTANCE - Calculated at X_f°C (103) per coil.

$$R_f \text{ (hot)} = (\rho_{f\ hot}) \frac{(N_f)\ (\ell_{tf})}{(a_{cf})} = (152)\ \frac{(146)\ (147)}{(153)}$$

(156) --

WEIGHT OF FIELD COIL in lbs - per coil

#'s of copper $= .321 (N_f)(\ell_{tf})(a_{cf})$

$= .321 (146)(147)(153)$

NOTE: ALSO SEE NOTE GIVEN IN ITEM (65)

(157) --

WEIGHT OF ROTOR IRON - Because of the large number of different pole shapes, one standard formula cannot be used for calculating rotor iron weight. Therefore the computer will not calculate rotor iron weight. The space is allowed on the input sheet for record purposes only. By inserting 0. in the space allowed for rotor iron weight, the computer will show "0" on the output sheet. If the rotor iron weight is available and inserted on input sheet, then the output sheet will show this same weight on the output sheet.

(160) X_f

THE EFFECTIVE FIELD LEAKAGE REACTANCE - The reactance which added to the stator leakage reactance gives the transient reactance X'_{du}.

When unit fundamental armature ampere turns are suddenly applied on the direct axis, an initial field current (I_f) will be induced. The value of this initial field current will be just enough to make the net flux interlinking the field because of the field current and the armature current zero. The field ampere turns will equal the armature ampere turns.

$$X'_F = (X)\frac{(P)}{(\ell_s)}\frac{\left[\frac{(C_1)}{(C_P)}\right]^2 (P_g)^2}{2\pi(P_e)\left(\frac{g'_e}{g_e}\right)^2} \times 10^{-6}$$

$$X'_F = (129)\frac{(6)}{(17)}\left[\frac{\left[\frac{(71)}{(73)}\right]^2 (160)}{2\pi(160a)\left[\frac{(160)}{(69)}\right]^2}\right] \times 10^{-6}$$

Where: $$P_g = \frac{3.19\ (\tau_p)(\ell_s)(C_p)}{(g_e)} = \frac{3.19\ (41)(17)(73)}{(69)}$$

Where: $$g'_e = (g_e)\left[\frac{2(F_g) + (F_{g2})}{2\ F_g}\right] = (69)\left[\frac{2(96) + (123)}{2\ (96)}\right]$$

(160a) P_e FIELD LEAKAGE PERMEANCE

$$P_e = P_1 + P_2 + P_3 + P_4 + P_5$$

$$= (80) + (81) + (82) + (83) + (84)$$

(161) L_f FIELD SELF-INDUCTANCE

$$L_f = (N_F)^2 \ (P_e)$$

$$= 2(146)^2 \ (160a)$$

(166) X'_{du} UNSATURATED TRANSIENT REACTANCE

$$X'_{du} = (X_\ell) + (X_f) = (130) + (160)$$

(167) X'_d SATURATED TRANSIENT REACTANCE

$$X'_d = .88(X'_{du}) = .88(166)$$

(168) X''_d SUBTRANSIENT REACTANCE in direct axis

$$X''_d = (X'_d) = (167)$$

(169) X''_q SUBTRANSIENT REACTANCE in quadrature axis

$$X''_q = X_q = (134)$$

(170) X_2 NEGATIVE SEQUENCE REACTANCE - The reactance due to the field which rotates at synchronous speed in a direction opposite to that of the rotor.

$$X_2 = .5 \left[X''_d + X''_q\right] = .5 \left[(168) + (169)\right]$$

(172) X_0

ZERO SEQUENCE REACTANCE - The reactance drop across any one phase (star connected) for unit current in each of the phases. The machine must be star connected for otherwise no zero sequence current can flow and the term then has no significance.

If (28) = 0 Then $X_o = 0$

If (28) $\neq$ 0 Then

$$X_o = X\left\{\frac{(K_{xo})}{(K_{x1})}\left[(\lambda_i) + (\lambda_{Bo})\right] + \frac{1.667\left[(h_1) + 2(h_3)\right]}{(m)(q)(K_P)^2(K_d)^2(b_s)} + .2(\lambda_E\right.$$

$$= (79)\left\{\frac{(173)}{(174)}\left[(62) + (175)\right] + \frac{1.667\left[(22) + 2(22)\right]}{(5)(25)(44)^2(43)^2(22)} + .2(\right.$$

(173) K_{xo}

If (30) = 1 Then $K_{xo} = 1$

If (30) $\neq$ 1 Then $K_{xo} = \frac{3(\gamma)}{(m)(q)} - 2$

$$= \frac{3(31)}{(5)(25)} - 2$$

(174) K_{x1}

If (30) = 1 Then $K_{x1} = 1$

If (30) $\neq$ 1 Then:

$$K_{x1} = \left[\frac{3(\gamma)}{4(m)(q)} + \frac{1}{4}\right] = \left[\frac{3(31)}{4(5)(25)} + \frac{1}{4}\right] \quad \text{If (31a)} \geq .667$$

$$K_{x1} = \left[\frac{3(\gamma)}{4(m)(q)} - \frac{1}{4}\right] = \left[\frac{3(31)}{4(5)(25)} - \frac{1}{4}\right] \quad \text{If (31a)} < .667$$

(175) λ_{Bo}

$$\lambda_{Bo} = \frac{(K_{xo})}{(K_P)^2} \left[.07(\lambda_a)\right. = \frac{(173)}{(44)^2}\left[.07(175)\right]$$

Where $\lambda_a = \frac{6.38(d)}{(P)(g_e)} = \frac{6.38(11)}{(6)(69)}$

(176) T'_{do}

<u>OPEN CIRCUIT TIME CONSTANT</u> - The time constant of the field winding with the stator open circuited and with negligible external resistance and inductance in the field circuit. Field resistance at room temperature (20°C) is used in this calculation.

$$T'_{do} = \frac{L_F}{R_F} = \frac{(161)}{(154)}$$

(177) T_a

<u>ARMATURE TIME CONSTANT</u> - Time constant of the D.C. component. In this calculation stator resistance at room temperature (20°C) is used.

$$T_a = \frac{X_2}{200\pi(f)(r_a)} = \frac{(170)}{200\pi(5a)(177)}$$

Where: $r_a = \frac{(m)(I_{PH})^2(R_{SPH\ cold})}{\text{Rated KVA}} = \frac{(5)(8)^2(53)}{2}$

(178) T'_d

<u>TRANSIENT TIME CONSTANT</u> - The time constant of the transient reactance component of the alternating wave.

$$T'_d = \frac{(X'_d)}{(X_d)}(T'_{do}) = \frac{(167)}{(133)}(176)$$

(180)	F_{SC}	SHORT CIRCUIT AMPERE TURNS - The field ampere turns required to circulate rated stator current when the stator is short circuited. $F_{SC} = (X_d)(F_g) = (133)(96)$
(181)	SCR	SHORT CIRCUIT RATIO - The ratio of the field current to produce rated voltage on open circuit to the field current required to produce rated current on short circuit. Since the voltage regulation depends on the leakage reactance and the armature reaction, it is closely related to the current which the machine produces under short circuit conditions, and, therefore, is directly related to the SCR. $SCR = F_{NL}/F_{SC} = (127)/(180)$
(182)	I^2R_F	FIELD I^2R - at no load. The copper loss in the field winding is calculated with cold field resistance at 20^oC for no load condition. Field $I^2R = 2(I_{FNL})^2 (R_{f\ cold}) = 2(127a)^2 (154)$

(183) F&W

FRICTION & WINDAGE LOSS - The best results are obtained by using existing data. For ratioing purposes, the loss can be assumed to vary approximately as the 5/2 power of the rotor diameter and as the 3/2 power of the RPM. When no existing data is available, the following calculation can be used for an approximate answer. Insert 0. when computer is to calculate F&W. Insert actual F&W when available. Use same value for all load conditions.

$$F\&W = 2.52 \times 10^{-6} (d_r)^{2.5} (\ell_p) (RPM)^{1.5}$$

$$= 2.52 \times 10^{-6} (11a)^{2.5} (76) (7)^{1.5}$$

(184) W_{TNL}

STATOR TEETH LOSS - at no load. The no load loss (W_{TNL}) consists of eddy current and hysteresis losses in the iron. For a given frequency the no load tooth loss will vary as the square of the flux density.

$$W_{TNL} = .453(b_t\ 1/3)(Q)(\ell_s)(h_s)(K_Q)$$

$$= .453(57a)(23)(17)(22)(184)$$

Where: $K_Q = (k)\left[\frac{(B_t)}{(B)}\right]^2 = (19)\left[\frac{(91)}{(20)}\right]^2$

(185) W_c

STATOR CORE LOSS - The stator core losses are due to eddy currents and hysteresis and do not change under load conditions. For a given frequency the core loss will vary as the square of the flux density (B_c).

$$W_c = 1.42 \left[(D) - (h_c)\right] (h_c)(\ell_s)(K_{Q1})$$

$$= 1.42 \left[(12) - (24)\right] (24)(17)(185)$$

Where: $K_{Q1} = (k) \left[\frac{(B_c)}{(B)}\right]^2 = (19) \left[\frac{(94)}{(20)}\right]^2$

(186) W_{NPL}

POLE FACE LOSS - at no load. The pole surface losses are due to slot ripple caused by the stator slots. They depend upon the width of the stator slot opening, the air gap, and the stator slot ripple frequency. The no load pole face loss (W_{PNL}) can be obtained from Graph 2. Graph 2 is plotted on the bases of open slots. In order to apply this curve to partially open slots, substitute b_o for b_s. For a better understanding of Graph 2, use the following sample:

K_1 as given on Graph 2 is derived empirically and depends on lamination material and thickness.

Those values given on Graph 2 have been used with success. K_1 is an input and must be specified. See Item (187) for values of K_1.

K_1 is shown as being plotted as a function of $(B_G)^{2.5}$. Also note that upper scale is to be used. Another note in the lower right hand corner of graph indicates that for a solid line (_____), the factor is read from the left scale, and for a broken or dashed line (____ _ ____ _), the right scale should be read. For example, find K_2 when B_G = 30 kilolines. First locate 30 on upper scale. Read down to the intersection of solid line plot of $K_2 = f(B_G)^{2.5}$. At this intersection read the left scale for K_2. K_2 = .28. Also refer to Item (188) for K_2 calculations.

K_3 is shown as a solid line plot as a function of $(F_{SLT})^{1.65}$. The note on this plot indicates that the upper scale X 10 should be used. Note F_{SLT} = slot frequency. For an example, find K_3 when F_{SLT} = 1000. Use upper scale X 10 to locate 1000. Read down to intersection of solid line plots of $K_3 = f(F_{SLT})^{1.65}$. At this intersection read the left scale for K_3. K_3 = 1.35. Also refer to Item (189) for K_3 calculations

For K_4 use same procedure as outlined above except use lower scale. Do not confuse the dashed line in this plot with the note to use the right scale. The note does not apply in this case. Read left scale. Also refer to Item (190) for K_4 calculations.

For K_5 use bottom scale and substitute b_o for b_s when using partially closed slot. Read left scale when using solid plot. Use right scale when using dashed plot. Also refer to Item (191) for K_5 calculations.

For K_6 use the scale attached for C_1 and read K_6 from left scale. Also refer to Item (192) for K_6 calculations.

The above factors (K_2), (K_3), (K_4), (K_5), (K_6) can also be calculated as shown in (188), (189), (190), (191), (192) respectively.

$$W_{PNL} = \pi(d)(\ell)(K_1)(K_2)(K_3)(K_4)(K_5)(K_6)$$
$$= \pi(11)(13)(187)(188)(189)(190)(191)(192)$$

(187) K_1

K_1 is derived empirically and depends on lamination material and thickness. The values used successfully for K_1 are shown on Graph 2. They are:

K_1 = 1.17 for .028 lam thickness, low carbon steel

= 1.75 for .063 lam thickness, low carbon steel

= 3.5 for .125 lam thickness, low carbon steel

= 7.0 for solid core

K_1 is an input and must be specified on input sheet.

(188) K_2

K_2 can be obtained from Graph 2 (see Item 186 for explanation of Graph 2) or it can be calculated as follows:

$$K_2 = f(B_G) = 6.1 \times 10^{-5} (B_G)^{2.5}$$

$$= 6.1 \times 10^{-5} (95)^{2.5}$$

(189) K_3

K_3 can be obtained from Graph 2 (see Item 186 for explanation of Graph 2) or it can be calculated as follows:

$$K_3 = f(F_{SLT}) = 1.5147 \times 10^{-5} (F_{SLT})^{1.65}$$

$$= 1.5147 \times 10^{-5} (189)^{1.65}$$

Where $F_{SLT} = \frac{(RPM)}{60} (Q)$

$$= \frac{(7)}{60} (23)$$

(190)	K_4	K_4 can be obtained from Graph 2 (See Item 186 for explanation of Graph 2) or it can be calculated as follows: For $\tau_s \leqq .9$ $K_4 = f(\tau_s) = .81(\tau_s)^{1.285}$ $= .81(26)^{1.285}$ For $.9 \leqq \tau_s \leqq 2.0$ $K_4 = f(\tau_s) = .79(\tau_s)^{1.145}$ $= .79(26)^{1.145}$ For $\tau_s > 2.0$ $K_4 = f(\tau_s) = .92(\tau_s)^{.79}$ $= .92(26)^{.79}$
(191)	K_5	K_5 can be obtained from Graph 2 (see Item 186 for explanation of Graph 2) or it can be calculated as follows: For $(b_s)/(g) \leqq 1.7$ $K_5 = f(b_s/g) = .3\left[(b_s)/(g)\right]^{2.31}$ $= .3\left[(22)/(59)\right]^{2.31}$

NOTE: For partially open slots substitute b_o for b_s in equations shown.

For $1.7 < (b_s)/(g) \leq 3$

$$K_5 = f(b_s)/(g) = .35 \left[(b_s)/(g)\right]^2$$

$$= .35 \left[(22)/(59)\right]^2$$

For $3 < (b_s)/(g) \leq 5$

$$K_5 = f(b_s)/(g) = .625 \left[(b_s)/(g)\right]^{1.4}$$

$$= .625 \left[(22)/(59)\right]^{1.4}$$

For $(b_s)/(g) > 5$

$$K_5 = f\left[(b_s) \quad /(g)\right] = 1.38 \left[(b_s)/(g)\right]^{.965}$$

$$= 1.38 \left[(22)/(59)\right]^{.965}$$

(192) K_6 — K_6 can be obtained from Graph 2 (see Item 186 for explanation of Graph 2) or it can be calculated as follows:

$$K_6 = f(C_1) = 10 \left[.9323(C_1) - 1.60596\right]$$

$$= 10 \left[.9323(71) - 1.60596\right]$$

(194) I^2R — <u>STATOR I^2R</u> - at no load. This item = 0. Refer to Item (245) for 100% load stator I^2R.

(195) -- <u>EDDY LOSS</u> - at no load. This item = 0. Refer to Item (246) for 100% load eddy loss.

(196)	--	<u>TOTAL LOSSES</u> - at no load. Sum of all losses Total losses = (Field I^2R) + (F&W) + (Stator Teeth Loss) + (Stator Core Loss) + (Pole Face Loss) = (182) + (183) + (184) + (185) + (186) NOTE: The output sheet shows the next items to be: (Rating), (Rating Losses), (% Losses), (% Efficiency). These items do not apply to the no load calculation since the rating is zero. Refer to Items (248), (249), (250), (251) for these calculations under load. The N. L. calculations should all be repeated now for 100% load.
(196a)	$\phi_{\ell\ell}$	<u>LEAKAGE FLUX PER POLE</u> at 100% load $\phi_{\ell\ell} = \phi_{\ell}\left\{\frac{(e_d)(F_g) + [1 + \cos(\theta)]\,(F_T) + (F_C)}{(F_g) + (F_T) + (F_C)}\right\}$ $= (100)\left\{\frac{(198)(96) + [1 + \cos(198a)]\,(97) + (98)}{(96) + (97) + (98)}\right\}$
(198)	e_d	Where $e_d = \cos\epsilon + (X_d)\sin\psi$ $= \cos(198a) + (83)\sin(198b)$

(198a)	θ	Where $\theta = \cos^{-1}\left[(\text{Power Factor})\right]$ $= \cos^{-1}\left[(9)\right]$ Where $\psi = \tan^{-1}\left[\dfrac{\sin(\theta) + (X_q)/(100)}{\cos(\theta)}\right]$ $= \tan^{-1}\left[\dfrac{\sin(198a) + (134)/(100)}{\cos(198a)}\right]$ Where $\epsilon = \psi - \theta = (198a) - (198a)$
(207)	ϕ_{7L}	<u>FLUX LEAKAGE FROM STATOR TO YOKE AND ROTOR</u> under load. $\phi_{7L} = (P_7)\left[(F_{PL}) + (e_d)(F_g) + (F_T)\left[1 + \cos(\theta)\right] + (F_c)\right] \times 10^{-3}$ $= (86)\left[(213c) + (198)(96) + (97)\left[1 + \cos(198a)\right] + (98)\right] \times 10^{-3}$
(213)	ϕ_{PL}	<u>FLUX PER POLE</u> at 100% load For P.F. .0 to .95 $\phi_{PL} = (\phi_P)\left[(e_d) - \dfrac{.93(X_{ad})}{100}\sin(\psi)\right]$ $= (92)\left[(198) - \dfrac{.93(131)}{100}\sin(198a)\right]$ For P.F. .95 to 1.0 $\phi_{PL} = (\phi_P)(K_c) = (92)(9a)$
(213a)	ϕ_{PTL}	<u>TOTAL FLUX PER POLE</u> at 100% load $\phi_{PTL} = \phi_{PL} + \dfrac{\phi_{\ell\ell}}{P} = (213) + \dfrac{(196a)}{(6)}$

(213b) B_{PL} FLUX DENSITY AT BASE OF POLE at 100% load

$$B_{PL} = \frac{\phi_{PTL}}{a_p} = \frac{(213a)}{(79)}$$

(213c) F_{PL} AMPERE TURNS PER POLE at 100% load

$$F_{PL} = (\ell_p) \left[\text{NI/in @ density } (B_{PL}) \right]$$

$$= (76) \left[\begin{array}{l} \text{Look up ampere turns/inch on rotor} \\ \text{magnetization curve given in (18) at} \\ \text{density (213b).} \end{array} \right]$$

(221) ϕ_{g2L} TOTAL FLUX IN AUXILIARY AIR GAP under load

$$\phi_{g2L} = (\phi_{PTL}) \frac{(P)}{2} + \frac{(\phi_{7L})}{}$$

$$= (213a) \frac{(6)}{2} + \frac{(207)}{}$$

(224) B_{g2L} FLUX DENSITY IN AUXILIARY AIR GAP under load

$$B_{g2L} = \frac{\phi_{g2L}}{A_{g2}} = \frac{(221)}{(70)}$$

(225) F_{g2L} AUXILIARY AIR GAP AMPERE TURN DROP under load

$$F_{g2L} = \frac{(B_{g2L})\ (g_2)}{3.19} \times 10^3 = \frac{(224)\ (59a)}{3.19} \times 10^3$$

(226) ϕ_{5L} COIL LEAKAGE FLUX under load

$$\phi_{5L} = (P_5) \left[(F_{PL}) + (e_d)(F_g) + (F_T) \left[1 + \cos(\theta) \right] + (F_c) \right] \times 10^{-3}$$

$$= (84) \left[(213c) + (198)(96) + (97) \left[1 + \cos(198a) \right] + (98) \right] \times$$

(227) ϕ_{y2L} <u>FLUX IN END-BELL SECTION OF YOKE</u> under load

$$\phi_{y2L} = (\phi_{g2L}) + (\phi_{5L})$$
$$= (221) + (226)$$

(228) B_{y2L} <u>DENSITY IN END-BELL SECTION OF YOKE</u> under load

$$B_{y2L} = \frac{(\phi_{y2L})}{(A_{y2})} = \frac{(227)}{(124)}$$

(229) F_{y2L} <u>AMPERE TURN DROP IN END-BELL SECTION OF YOKE</u> under load.

$$F_{y2L} = \left[\frac{(D) - (d_{y2})}{6}\right] \left[\text{NI/inch at density } (B_{y2L})\right]$$
$$= \left[\frac{(12) - (87)}{6}\right] \left[\text{Look up on yoke magnetization curve given in (18) at density (228)}\right]$$

(229b) B_{yL} <u>FLUX DENSITY IN HOUSING SECTION OF YOKE</u> under full load.

$$B_{yL} = \frac{(\phi_{y2L})}{(A_y)} = \frac{(227)}{(124a)}$$

(229c) F_{yL} <u>AMPERE TURN DROP IN HOUSING SECTION OF YOKE</u> using 1/2 total length of housing.

$$F_{yL} = (\ell_y) \left[\text{NI/inch at density } (B_{yL})\right]$$
$$= (78) \left[\text{Look up on yoke magnetization curve given in (18) at density (229b)}\right]$$

(236) F_{FL} TOTAL AMPERE TURN DROP PER COIL at full load

$$F_{FL} = (F_{yL})+(F_{y2L})+(F_{g2L})+(F_{PL})+(e_d)(F_g)+(F_T)[1+\cos(\theta)]+(F_c$$

$$= (229c)+(229)+(225)+(213c)+(198a)(96)+(97)[1+\cos(198a)]+($$

(237) I_{FFL} FIELD AMPERES PER COIL under load

$$I_{FFL} = \frac{(F_{FL})}{(N_f)} = \frac{(236)}{(146)}$$

(239) -- CURRENT DENSITY at 100% load

Current Density = $(I_{FFL})/(a_{cf})$ = (237)/(153)

(238) E_{FFL} FIELD VOLTS at 100% load - This calculation is made with hot field resistance at expected temperature at 100% load.

Field Volts = $(I_{FFL})(R_{f\ hot})$ = (237)(155)

(241) I^2R_{FL} FIELD I^2R at 100% load - The copper loss in the field winding is calculated with hot field resistance at expected temperature for 100% load condition.

Field I^2R = $(I_{FFL})^2(R_{f\ hot})$ = $(237)^2(155)$

(242) W_{TFL} STATOR TEETH LOSS at 100% load - The stator tooth loss under load increases over that of no load because of the parasitic fluxes caused by the ripple due to the rotor damper bar slot openings.

$$W_{TFL} = \left\{ 2\left[.27(X_d) \quad \frac{(\%\ \text{Load})}{100} \right] + 1 \right\} (W_{TNL})$$

NOTE (X_d) is in per unit

$$= \left\{ 2\left[.27(133) \quad 1 \right] + 1 \right\} (184)$$

(243) W_{PFL} <u>POLE FACE LOSS</u> at 100% Load

$$W_{PFL} = \left\{ \left[\frac{(K_{sc})(I_{PH}) \frac{(\%\ \text{Load})}{100} (n_s)}{(C)(F_g)} \right]^2 + 1 \right\} (W_{PNL})$$

$$= \left\{ \left[\frac{(242)(8)\ 1\ (30)}{(32)(96)} \right]^2 + 1 \right\} (186)$$

(K_{sc}) is obtained from Graph 3

(245) I^2R_L <u>STATOR I^2R</u> at 100% load - The copper loss based on the D. C. resistance of the winding. Calculate at the maximum expected operating temperature.

$$I^2R = (m)(I_{PH})^2 (R_{SPH\ hot}) \frac{(\%\ \text{Load})}{100}$$

$$= (5)(8)^2 (54)\ 1$$

(246) -- <u>EDDY LOSS</u> - Stator I^2R loss due to skin effect

$$\text{Eddy Loss} = \left[\frac{(EF\ top) + (EF_{bot})}{2} - 1 \right] (\text{Stator } I^2R)$$

$$= \left[\frac{(55) + (56)}{2} - 1 \right] (245)$$

(247) -- <u>TOTAL LOSSES</u> at 100% load - sum of all losses at 100% load

Total Losses = (Field I^2R) + (F&W) + (Stator Teeth Loss) (Stator Core Loss) + (Pole Face Loss) + (Stator I^2R) + (Eddy Loss)

= (241) + (183) + (242) + (185) + (243) + (245) + (246)

(248) -- <u>RATING IN KILOWATTS</u> at 100% load

$$\text{Rating} = 3(E_{PH})(I_{PH}) \qquad (\text{P. F.}) \frac{(\%\ \text{Load})}{100} \times 10^{-3}$$

$$= 3(4)(8) \qquad (9)(1.) \times 10^{-3}$$

(249) -- <u>RATING & Σ LOSSES</u> = (248) + (247)$\times 10^{-3}$

(250) -- <u>% LOSSES</u> = $\left[\Sigma\text{Losses}/(\text{Rating} + \Sigma\text{Losses})\right] 100$

$\left[(247)\times 10^{-3}/249\right] 100$

(251) -- <u>% EFFICIENCY</u> = 100% - % Losses

= 100% - (250)

These items can be recalculated for any load condition by simply inserting the values that correspond to the % load being calculated. The factor $\frac{(\%\ \text{Load})}{100}$ takes care of (I_{PH}) as it changes with load.

Note that values for F&W (183) and W_C (Stator Core Loss) (185) do not change with load, therefore, they can be calculated only once.

SUPPLEMENT TO DESIGN MANUAL FOR PERMEANCE CALCULATIONS

Permeance (P) is the property of a magnetic circuit, or any part of a circuit, which determines the total flux corresponding to a given mmf as indicated in the expression -

$$\phi = F\,P = \text{mmf} \times \text{permeance}$$

From "Standard Handbook for Electrical Engineers" A. E. Knowlton 7th edition, McGraw-Hill, Section 4-310

Magnetic Permeability (μ) is that property of an isotropic medium which determines under specified conditions, the magnitude relation between magnetic induction and magnetizing force in the medium usually expressed -

$$\mu = \frac{B}{H}$$

Same reference section 4-306.

For air $\mu = 3.19 \dfrac{\text{Flux Line/inch}^2}{\text{Ampere Turns/inch}}$

The following formulas are from Roter's "Electromagnetic Devices"

Parallel planes of infinite extent

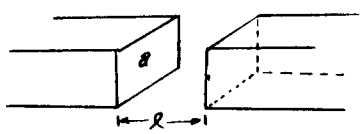

$$P = \mu\, a/\ell$$

where a = area

ℓ = length of flux path

NON-PARALLEL PLANES OF INFINITE EXTENT

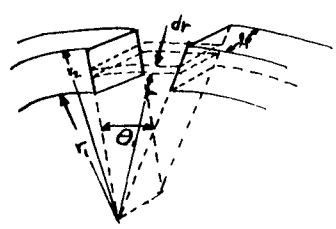

$$dP = \frac{\mu \ell_p\, dr}{\theta r}$$

$$P = \frac{\mu \ell_p}{\theta} \int_{r_1}^{r_2} \frac{dr}{r}$$

$$P = \frac{\mu \ell_p}{\theta} \ln \frac{r_2}{r_1}$$

QUADRANT OF SPHERICAL SHELL

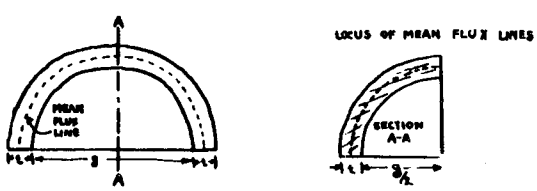

Mean length of flux path is $\frac{\pi}{2}(t+g)$

Maximum area of flux path is -

$$\frac{\pi\left(\frac{g}{2}+t\right)^2}{4} - \frac{\pi g^2}{16} = \frac{\pi}{4}(t^2 + tg)$$

Average area of path is considered to be -

$$\frac{\pi}{8} t(t+g) \text{ and } P = \frac{\mu a}{\ell} = \frac{\mu \frac{\pi}{8} t(t+g)}{\frac{\pi}{2}(t+g)} = \frac{\mu t}{4}$$

Special formulas for use in estimating permeances of flux paths.

SEMI-CIRCULAR CYLINDRICAL VOLUME

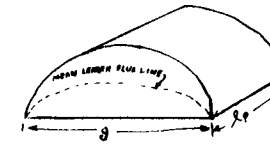

Mean length of flux line has been found by graphical measurement to be 1.22 g.

Mean area of flux path found by dividing the entire volume by mean length of flux path is,

$$\text{Mean area} = \frac{\pi g^2 \ell_p}{8} \times \frac{1}{1.22\,g} = 0.322\, g\, \ell_p$$

$$P = \frac{\mu a}{\ell} = \frac{0.322\, \mu g\, \ell_p}{1.22\, g} = 0.26\, \mu\, \ell_p$$

HALF ANNULUS

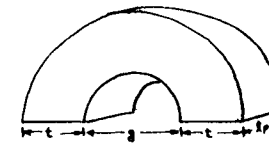

NOTE: IN THE COMPUTER DESIGN MANUAL THE SYMBOL g WAS CHANGED TO z TO AVOID CONFUSION WITH g (AIR GAP)

Assume the mean length of the flux path to be $\pi\left(\frac{g+t}{2}\right)$ and the average area of the path to be $t\ell_p$ then

$$P = \frac{\mu a}{\ell} = \frac{2\mu t \ell_p}{\pi(g+t)} = 0.64\, \frac{\mu \ell_p}{\left(\frac{g}{t}+1\right)}$$

WHEN $g < 3t$ $\quad P = \frac{\mu \ell_p}{\pi} \ln\left(1 + \frac{2t}{g}\right)$

SPHERICAL QUADRANT

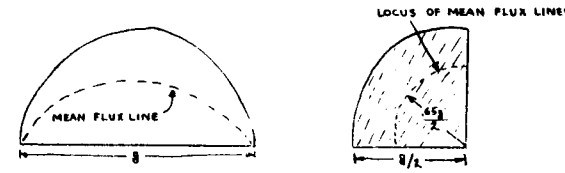

By graphical measurement, the mean flux line is 1.3 g. Volume of quadrant is $1/3\,\pi\left(\frac{g}{2}\right)^3$, hence mean area of flux path is -

$$\frac{\frac{1}{3}\pi\left(\frac{g}{2}\right)^3}{1.3\,g} = 0.1\, g^2$$

and the permeance is

$$P = \frac{\mu a}{\ell} = \frac{0.1\, g^2 \mu}{1.3\, g} = 0.077\, \mu g$$

PASS 1

```
    1 FORMAT(E11.5,E11.5,E11.5,E11.5,E11.5,E11.5)
    2 FORMAT(F7.0,F7.0,F7.0,F7.0,F7.0,F7.0,F7.0,F7.0,F7.0,F7.0)
    3 FORMAT(2X F12.5,2X F12.5)
    7 READ2,VA,FE,EP,PN,F,PX,RPM,P1,PF,CK
      READ2,POL,D1,DU,CL,HV,BV,SF,VL,BK,ZZ
      READ2,B0,B1,B2,B3,BS,H0,HX,HY,HZ,HS
      READ2,HT,HW,QQ,V,RF,SC,YY,C,DW,SN
      READ2,SN1,DW1,PB,CF,SU,SD,PBA,SK,T1,PS
      READ2,ALG2,PG2,GC,G2,C1,CW,CP,EL,CM,CO
      READ2,PE,BP1,BP2,TP1,TP2,ALP,DR,VR,D1,P1
      READ2,P2,P3,P4,P5,P7,DY2,TY2,TY,ALY,AL1
      READ2,COILS,PT,FE,RD,RT,T2,RR,SNL,VF
      SS=SF*(CL-HV*BV)
      HC=(DU-D1-2.0*HS)*0.5
      QX=QQ/(PX*PN)
      TS=3.142*D1/QQ
      IF(ZZ-4.0)9,10,9
    9 TT=(0.667*HS+D1)*3.142/QQ
      GO TO 11
   10 TT=((2.0*H0+BS)*0.66+D1)*3.1416/QQ
   11 IF(ZZ-1.0)12,12,13
   12 CC=(5.0*GC+BS)*TS/((5.0*GC+BS)*TS-BS*BS)
      GO TO 14
   13 OC=(4.44*CC+0.75*B0)*TS
      CC=OC/(OC-B0*B0)
   14 CS=YY/(PU*QN)
      IF(CS-1.0)15,15,16
   15 IF(CS-0.5)16,16,17
```

```
16 PRINT2,111.0
   GO TO 7
17 TP=3.142*DI/PX
   IF(SK)18,18,19
18 FS=1.0
   GO TO 20
19 FS=SIN(1.571*SK/TP)*TP/(1.571*SK)
20 ZY=PX*PH
   IF(PBA-60.)21,21,22
21 D=1.0
   GO TO 23
22 D=2.0
23 U=0.0
24 U=U+1.0
   DM=U*ZY
   IF(QO-DM)26,25,24
25 DF=SIN(1.571*D/PH)/(QH*D*SIN(1.571/(PH*QH)))
   GO TO 27
26 DF=SIN(1.571*D/PH)/(QO*D*SIN(1.571/(QO*PH)))
27 CF=SIN(YY*1.571/(PH*QH))
   FC=QO*SC*CF*FS/C
   GE=CC*GC
   IF(C1)29,28,29
28 C1=0.049*LOG(PE)+1.350
29 IF(CV)30,30,31
30 CV=0.707*FE*C1*DF/(EP*PH)
31 IF(CP)32,32,33
32 CP=PE*(LOG(GC/TP)*.0378+1.191)
33 IF(EL)34,34,42
```

```
34 IF(RF)35,35,41
35 IF(PX-2.0)36,36,37
36 U=1.3
   GO TO 40
37 IF(PX-4.0)38,38,39
38 U=1.5
   GO TO 40
39 U=1.7
40 EL=3.142*U*YY*(DI+HS)/QQ+0.5
   GO TO 42
41 EL=2.0*CE+3.142*(0.5*HX+DB)+YY*TS*TS/SQRT(TS*TS-BS*BS)
42 IF(CM)43,43,44
43 AA=SIN(3.142*PE)
   AB=SIN(1.571*PE)*4.0
   CM=(3.142*PE+AA)/AB
44 IF(CQ)45,45,46
45 AA=1.571*PE
   AB=3.1416*PE
   CQ=(0.5*COS(AA)+AB-SIN(AB))/(4.0*SIN(AA))
46 RB=(T1+234.5)*0.00394*RS
   PRINT3,SS,CC,HC,GE,TS,C1,TT,CW,FS,CP,DF,EL,CF,CM,EC,CQ
   PUNCH1,VA,EE,EP,PN,F,PX
   PUNCH1,RPM,PI,PF,CK,POL,DI
   PUNCH1,DU,CL,SS,HC,SF,QN
   PUNCH1,WL,BK,ZZ,BO,B1,B2
   PUNCH1,B3,BS,HO,HX,HY,HZ
   PUNCH1,HS,HT,HW,QQ,W,RF
   PUNCH1,SC,YY,C,TS,SN,DB
   PUNCH1,CE,SH,SD,TT,SK,RB
```

```
PUNCH1,TP,D1,FE,RD,RT,COILS
PUNCH1,T2,RR,SNL,WF,PE,SN1
PUNCH1,DW1,BP1,BP2,TP1,TP2,ALP
PUNCH1,DR,WR,DY2,TY2,TY,ALY
PUNCH1,P1,P2,P3,P4,P5,P7
PUNCH1,G2,DG2,ALG2,AL1
PUNCH1,GE,CS,CF,FS,EC,DF
PUNCH1,RS,GC,PT,C1,CW,CP
PUNCH1,EL,CM,CQ,DW,CC,PBA
PAUSE
END
```

PASS 2

```
    1 FORMAT(E11.5,E11.5,E11.5,E11.5,E11.5,E11.5)
      DIMENSION DA(8),DX(6),DY(8),DZ(8)
      READ1,VA,EE,EP,PN,F,PX
      READ1 ,RPM,PI,PF,CK,POL,DI
      READ1,DU,CL,SS,HC,SF,QN
      READ1,WL,BK,ZZ,B0,B1,B2
      READ1,B3,BS,HO,HX,HY,HZ
      READ1,HS,HT,HW,QQ,W,RF
      READ1,SC,YY,C,TS,SN,DB
      READ1,CE,SH,SD,TT,SK,RB
      READ1,ALCO,TP,D1,FE,RD,RT
      READ1,T2,RR,SNL,WF,PE,SN1
      READ1,DW1,BP1,BP2,TP1,TP2,ALP
      READ1,DR,WR,TFP,DFP,DS1,ALSH
      READ1,P1,P2,P3,P4,P5,P7
      READ1,RS,GC,PT,C1,CW,CP
      READ1,EL,CM,CQ,DW,CC,PBA
      READ1,GE,CS,CF,FS,EC,DF
      READ1,DC1
      DT=DW1
      IF(ZZ-3.0)49,50,51
   49 SM=TT-BS                                                    EQ (57
      GO TO 53
   50 SM=(3.1416*(DI+2.*HS)/QQ)-B3
      GO TO 53
   51 IF(ZZ-4.0)50,52,49
   52 SM=TT-BS*(0.554-0.888*HO/BS)
   53 HM=CL+EL                                                    EQ (49
```

```
      IF(DT) 61,61,62
   61 AC=0.785*DW*DW*SN1
      GO TO 72
   62 ZY=0.0
      DA(1)=0.05
      DA(2)=0.072
      DA(3)=0.125
      DA(4)=0.165
      DA(5)=0.225
      DA(6)=0.438
      DA(7)=0.688
      DA(8)=1.5
      DX(1)=0.000124
      DX(2)=0.00021
      DX(3)=0.00021
      DX(4)=0.00084
      DX(5)=0.00189
      DX(6)=0.00189
      DY(1)=0.000124
      DY(2)=0.000124
      DY(3)=0.00084
      DY(4)=0.00084
      DY(5)=0.00189
      DY(6)=0.00335
      DY(7)=0.00754
      DY(8)=0.03020
      DZ(1)=0.000124
      DZ(2)=0.000124
      DZ(3)=0.000124
```

EQ (46)

```
      DZ(4)=0.00335
      DZ(5)=0.00335
      DZ(6)=0.00754
      DZ(7)=0.0134
      DZ(8)=0.0302
   63 IF(DT-.05)201,200,200
  200 JA=0
      JB=0
      JC=0
      JD=0
   64 JA=JA+1
      JB=JB+1
      JC=JC+1
      JD=JD+1
      IF(DT-DA(JA))65,65,64
  201 D=0
      IF(ZY)71,71,54
   65 IF(DW-0.188)66,66,67
   66 CY=DX(JB-1)
      CZ=DX(JB)
      GO TO 70
   67 IF(DW-0.75)68,68,69
   68 CY=DY(JC-1)
      CZ=DY(JC)
      GO TO 70
   69 CY=DZ(JD-1)
      CZ=DZ(JD)
   70 D=CY+(CZ-CY)*(DT-DA(JA-1))/(DA(JA)-DA(JA-1))
      IF(ZY)71,71,54
```

```
71 AC=(DT*DW-D)*SN1                                          EQ (46)
72 IF(RT)73,73,74
73 AS=0.785*RD*RD                                            EQ (153)
   GO TO 55
74 ZY=1.0
   DT=RT
   DW=RD
   GO TO 63
54 AS=RT*RD-D                                                EQ (153)
55 S=PI/(C*AC)                                               EQ (47)
   CY=PT    *FE*0.000001/AS
   FK=RR*CY                                                  EQ (154)
   FR=(T2+234.5)*FK*0.00394                                  EQ (155)
   RC=0.321*PT    *FE*AS                                     EQ (156)
   IF(SH)202,203,202
203 ET=1
   EB=1
   GO TO 204
202 AA=0.584+(SN*SN-1.0)*0.0625*(SD*CL/(SH*HM))**2.0
   AB=(SH*SC*F*AC/(BS*RB))**2.0
   ET=AA*AB*0.00335+1.0                                      EQ (55)
   EB=ET-0.00168*AB                                          EQ (56)
 04 RY=SC*QO*0.000001*HM/(PN*AC*C*C)                         EQ (53)
   RG=RS*RY                                                  EQ (53)
   RP=RB*RY                                                  EQ (54)
   A=PI*SC*CF/(C*TS)                                         EQ (128)
   PUNCH1,VA,EE,EP,PN,F,PX
   PUNCH1,RPM,PI,PF,CK,POL,DI
   PUNCH1,DU,CL,SS,HC,SF,QN
```

```
PUNCH1,WL,BK,ZZ,BO,B1,B2
PUNCH1,B3,BS,HO,HX,HY,HZ
PUNCH1,HS,HT,HW,QQ,W,RF
PUNCH1,SC,YY,C,TS,SN,DB
PUNCH1,CE,SH,SD,TT,SK,RB
PUNCH1,TP,D1,FE,RD,RT,COILS
PUNCH1,T2,RR,SNL,WF,PE,SN1
PUNCH1,DW1,BP1,BP2,TP1,TP2,ALP
PUNCH1,DR,WR,DY2,TY2,TY,ALY
PUNCH1,P1,P2,P3,P4,P5,P7
PUNCH1,G2,DG2,ALG2,AL1
PUNCH1,GE,CS,CF,FS,EC,DF
PUNCH1,RS,GC,PT,C1,CW,CP
PUNCH1,EL,CM,CQ,DW,CC,PBA
PUNCH1,HM,SM,AS,AC,ET,EB
PUNCH1,S,FK,FR,RC,RG,RP
PUNCH1,A
PAUSE
END
```

PASS 3

```
    1 FORMAT(E11.5,E11.5,E11.5,E11.5,E11.5,E11.5)
      READ 1,VA,EE,EP,PN,F,PX
      READ1 ,RPM,PI,PF,CK,POL,DI
      READ 1,DU,CL,SS,HC,SF,QN
      READ 1,WL,BK,ZZ,BO,B1,B2
      READ 1,B3,BS,HO,HX,HY,HZ
      READ 1,HS,HT,HW,QQ,W,RF
      READ 1,SC,YY,C,TS,SN,DB
      READ 1,CE,SH,SD,TT,SK,RB
      READ 1,TP,D1,FE,RD,RT,COILS
      READ 1,T2,RR,SNL,WF,PE,SN1
      READ 1,DW1,BP1,BP2,TP1,TP2,ALP
      READ 1,DR,WR,DY2,TY2,TY,ALY
      READ 1,P1,P2,P3,P4,P5,P7
      READ 1,G2,DG2,ALG2,AL1
      READ 1,GE,CS,CF,FS,EC,DF
      READ 1,RS,GC,PT,C1,CW,CP
      READ 1,EL,CM,CQ,DW,CC,PBA
      READ 1,HM,SM,AS,AC,ET,EB
      READ 1,S,FK,FR,RC,RG,RP
      READ 1,A
      IF(PBA-60.0)105,105,108
  105 IF(CS-0.667)106,106,107
  106 FF=0.25*(6.0*CS-1.0)
  107 FF=0.25*(3.*CS+1.0)
      GO TO 75
  108 IF(CF-0.667)109,109,110
  109 FF=0.05*(24.0*CS-1.0)
```

```
      GO TO 75
  110 FF=0.75
   75 CX=FF/(CF*CF*DF*DF)
      Z=CX*20.0/(PN*QN)
      BT=3.142*DI/QQ-BO
      ZA=BT*BT/(16.0*TS*GC)
      ZB=0.35*BT/TS
      ZC=HO/BO
      ZD=HX*0.333/BS
      ZE=HY/BS
      IF(ZZ-2.0) 76,77,78
   76 PC=Z*(ZE+ZD+ZA+ZB)
      GO TO 82
   77 PC=Z*(ZC+(2.0*HT/(BO+BS))+(HW/BS)+ZD+ZA+ZB)
      GO TO 82
   78 IF(ZZ-4.0) 79,80,81
   79 PC=Z*(ZC+(2.0*HT/(BO+B1))+(2.0*HW/(B1+B2))+(HX*0.333/B2)+ZA+ZB)
      GO TO 82
   80 PC=Z*(ZC+0.62)
      GO TO 82
   81 PC=Z*(ZE+ZD+(0.5*GC/TS)+(0.25*TS/GC)+0.6)
   82 EK=EL/(10.0**(0.103*YY*TS+0.402))
      IF(DI-8.0) 83,83,84
   83 EK=SQRT(EK)
   84 ZF=.612*LOG(10.0*CS)
      EW=6.28*EK*ZF*(TP**(0.62-(0.228*LOG(ZF))))/(CL*DF*DF)
   86 ZC=0.0
   87 ZA=3.1416*(DI+HS)/QQ
      IF(ZZ-3.0) 88,89,88
```

```
 88 TM=ZA-BS
    GO TO 90
 89 TM=(3.1416*(DI+2.*HS)/QQ)-B3
 90 WI=(TM*QQ*SS*HS+(DU-HC)*3.142*HC*SS)*0.283
    IF(WF)445,446,445
446 WF=2.52E-6*(DR**2.5)*ALP*RPM**1.5
445 WC=.321*HM*QQ*AC*SC
    PUNCH1,VA,EE,EP,PN,F,PX
    PUNCH1,RPM,PI,PF,CK,POL,DI
    PUNCH1,DU,CL,SS,HC,SF,QN
    PUNCH1,WL,BK,ZZ,B0,B1,B2
    PUNCH1,B3,BS,H0,HX,HY,HZ
    PUNCH1,HS,HT,HW,QQ,V,RF
    PUNCH1,SC,YY,C,TS,SN,DB
    PUNCH1,CE,SH,SD,TT,SK,RB
    PUNCH1,TP,D1,FE,RD,RT,COILS
    PUNCH1,T2,RR,SNL,WF,PE,SN1
    PUNCH1,DV1,BP1,BP2,TP1,TP2,ALP
    PUNCH1,DR,WR,DY2,TY2,TY,ALY
    PUNCH1,P1,P2,P3,P4,P5,P7
    PUNCH1,HM,SM,AS,AC,ET,EB
    PUNCH1,S,FK,FR,RC,RG,RP
    PUNCH1,G2,DG2,ALG2,AL1
    PUNCH1,GE,CS,CF,FS,EC,DF
    PUNCH1,RS,GC,PT,C1,CV,CP
    PUNCH1,EL,CM,CQ,DV,CC,PBA
    PUNCH1,FF,CX,PC,EK,EW,TM
    PUNCH1,A,WI,WC
    PAUSE
    END
```

```
PASS 4
    1 FORMAT(E11.5,E11.5,E11.5,E11.5.E11.5,E11.5)
      READ1 ,VA,EE,EP,PN,F,PX
      READ1 ,RPM,PI,PF,CK,POL,DI
      READ 1,DU,CL,SS,HC,SF,QN
      READ 1,WL,BK,ZZ,BO,B1,B2
      READ 1,B3,BS,HO,HX,HY,HZ
      READ 1,HS,HT,HW,QQ,W,RF
      READ 1,SC,YY,C,TS,SN,DB
      READ 1,CE,SH,SD,TT,SK,RB
      READ 1,TP,D1,FE,RD,RT,COILS
      READ 1,T2,RR,SNL,WF,PE,SN1
      READ 1,DW1,BP1,BP2,TP1,TP2,ALP
      READ 1,DR,WR,DY2,TY2,TY,ALY
      READ 1,P1,P2,P3,P4,P5,P7
      READ 1,HM,SM,AS,AC,ET,EB
      READ 1,S,FK,FR,RC,RG,RP
      READ 1,G2,DG2,ALG2,AL1
      READ 1,GE,CS,CF,FS,EC,DF
      READ 1,RS,GC,PT,C1,CW,CP
      READ 1,EL,CM,CQ,DW,CC,PBA
      READ 1,FF,CX,PC,EK,EW,TM
      READ 1,A,WI,WC
      IF(P1)400,401,400
  401 P1=3.19*BP1*TP1/AL1
  400 IF(P2)402,403,402
  403 AL2=TP-(BP1+BP2)/2.
      P2=3.19*(ALP*(TP2+TP1)/2.)/AL2
  402 IF(P3)404,405,404
```

```
405 R4=AL1-CL/2.
    P3=((3.*BP1+BP2)/2.)*LOG(AL1/R4,
404 IF(P4)409,407,409
407 P4=(3.19*ALP/3.1416)*LOG(1.+(BP1+BP2)/AL2)
    IF(PX-4.)408,408,409
408 P4=P4*1.5
409 TG=6.E6*EE/(CW*EC*RPM)
    BT1=TG/(QQ*SS*SM)
    FQ=TG*CP/PX
    BC1=FQ/(2.*HC*SS)
    BG1=TG/(3.1416*DI*CL)
    FG=BG1*GE/.00319
    AY2=3.1416*DY2*TY2
    A2=3.1416*DG2*ALG2
    AP=BP2*TP2
    AY=3.1416*TY*(DU+TY)
    WQ=(DU-HC)*1.42*HC*SS*(BC1/BK)**2.0*WL
    WT=   SM    *QQ*SS*HS*0.453*(BT1/BK)**2.0*WL
132 D2=BG1**2.5*0.000061
    D3=(0.0167*QQ*RPM)**1.65*0.000015147
    IF(TS-0.9)133,133,134
133 D4=TS**1.285*0.81
    GO TO 137
134 IF(TS-2.0)135,135,136
135 D4=TS**1.145*0.79
    GO TO 137
136 D4=TS**0.79*0.92
137 D7=BO/GC
    IF(D7-1.7)138,138,139
```

```
138 D5=D7**2.31*0.3
    GO TO 144
139 IF(D7-3.0)140,140,141
140 D5=D7**2.0*0.35
    GO TO 144
141 IF(D7-5.0)142,142,143
142 D5=D7**1.4*0.625
    GO TO 144
143 D5=D7**0.965*1.38
144 D6=10.0**(0.932*C1-1.606)
    BA=3.142*D1*CL
    WN=D1*D2*D3*D4*D5*D6*BA
    PUNCH1,VA,EE,EP,PN,F,PX
    PUNCH1,RPM,PI,PF,CK,POL,DI
    PUNCH1,DU,CL,SS,HC,SF,QN
    PUNCH1,WL,BK,ZZ,B0,B1,B2
    PUNCH1,B3,BS,H0,HX,HY,HZ
    PUNCH1,HS,HT,HW,QQ,W,RF
    PUNCH1,SC,YY,C,TS,SN,DB
    PUNCH1,CE,SH,SD,TT,SK,RB
    PUNCH1,TP,D1,FE,RD,RT,COILS
    PUNCH1,T2,RR,SNL,WF,PE,SN1
    PUNCH1,DW1,BP1,BP2,TP1,TP2,ALP
    PUNCH1,DR,WR,DY2,TY2,TY,ALY
    PUNCH1,HM,SM,AS,AC,ET,EB
    PUNCH1,S,FK,FR,RC,RG,RP
    PUNCH1,G2,DG2,ALG2,AL1
    PUNCH1,GE,CS,CF,FS,EC,DF
    PUNCH1,RS,GC,PT,C1,CW,CP
```

```
PUNCH1,EL,CM,CQ,DW,CC,CBA
PUNCH1,FF,CX,PC,EK,EW,TM
PUNCH1,A,W1,WC,WN,WT,WQ
PUNCH1,TG,FQ,BC1,BT1,BG1,FG
PUNCH1,P1,P2,P3,P4,P5,P7
PUNCH1,PX,ALP,A2,G2,AY2,AY
PUNCH1,DU,DY2,ALY,PT,FK,AS
PUNCH1,COILS,HC,AP,HS
PAUSE
END
```

PASS 5

```
      DIMENSION AI(90)
    1 FORMAT(E11.5,E11.5,E11.5,E11.5,E11.5,E11.5)
  888 FORMAT(F10.0,F10.0,F10.0,F10.0,F10.0,F10.0)
      K=1
  823 READ888,AI(K),AI(K+1),AI(K+2),AI(K+3),AI(K+4),AI(K+5)
      K=K+6
      IF(K-89)823,824,824
  824 DO 825 J=1,20
      READ 1,R1,R2,R3,R4,R5,R6
  825 PUNCH1,R1,R2,R3,R4,R5,R6
      READ1 ,TG,FQ,BC1,BT1,BG1,FG
      READ1 ,P1,P2,P3,P4,P5,P7
      READ1 ,PX,ALP,A2,G2,AY2,AY
      READ1 ,DU,DY2,ALY,PT,FK,AS
      READ1 ,COILS,HC,AP,HS
      LOAD=1
      COREL=3.1416*(DU-HC)/(4.*PX)
      X=BT1
      NA=1
      K=1
      GO TO 802
  806 FT=HS*AT
      X=BC1
      K=2
      NA=1
      GO TO 802
  807 FC=COREL*AT
      FS=FT+FC
```

```
      PL=(FG+FS)*(P1+P2+P3+P4)*.002
      PLT=FO+PL/PX
      BP=PLT/AP
      X=BP
      NA=31
      K=3
      GO TO 802
808   FP=ALP*AT
      PL7=.001*P7*(FC+FT+FG+FP)
      PG2=PLT*PX/2.+PL7
      BG2=PG2/A2
      FG2=BG2*G2/.00319
      IF(COILS-1.)814,815,814
814   PL5=.001*P5*(FG2+FP+FG+FT+FC)
      BY2=(PG2+PL5)/AY2
      GO TO 816
815   BY2=PG2/AY2
816   K=4
      NA=61
      GO TO 802
809   FY2=((DU-DY2)/6.)*AT
      IF(COILS-1.)817,818,817
818   PL5=.002*P5*(FG2+FY2+FP+FG+FT+FC)
817   BY=(PG2+PL5)/AY
      NA=61
      K=5
      GO TO 802
810   FY=AT*ALY
      FNL=    (FY+FY2+FG2+FP+FG+FT+FC)*(2./COILS)
```

```
      AINL=FNL/PT
      CD=AINL/AS
      EPNL=AINL*FK
      PUNCH1,TG,FQ,BC1,BT1,BG1,FG
      PUNCH1,P1,P2,P3,P4,P5,P7
      PUNCH1,A2,AY2,AY,BP,BY,BY2
      PUNCH1,BG2,FG2,FNL,AINL,CD,EPNL
      PUNCH1,AP,PL,PLT,FC,FT
      PAUSE
802   IF(AI(NA)-X)830,831,831
831   NA=NA+3
835   IF(AI(NA)-X)833,834,834
833   NA=NA+2
      GO TO 835
834   AX=AI(NA)
      BB1=AI(NA-2)
      DC=AI(NA+1)
      D=AI(NA-1)
      XX= (AX-BB1)/(.4343*(LOG(DC)-LOG(D+.0001)))
      Y=AX-XX*.4343*LOG(DC)
         AT=EXP(2.306*(X-Y)/XX)
      GO TO (838,839),LOAD
838   GO TO (806,807,808,809,810),K
830   GO TO (836,837),LOAD
836   PRINT 850,
850   FORMAT (17HMACHINE SATURATED)
      PAUSE
      END
```

PASS 6

```
    3 FORMAT(9X F12.5,2X F12.5)
    1 FORMAT(E11.5,E11.5,E11.5,E11.5,E11.5,E11.5)
  870 FORMAT(23X F12.5/)
      READ1 ,VA,EE,EP,PN,F,PX
      READ1 ,RPM,PI,PF,CK,POL,DI
      READ1 ,DU,CL,SS,HC,SF,QN
      READ1 ,WL,BK,ZZ,B0,B1,B2
      READ1 ,B3,BS,HO,HX,HY,HZ
      READ1 ,HS,HT,HW,QQ,W,RF
      READ1 ,SC,YY,C,TS,SN,DB
      READ1 ,CE,SH,SD,TT,SK,RB
      READ1 ,TP,D1,FE,RD,RT,COILS
      READ1 ,T2,RR,SNL,WF,PE,SN1
      READ1 ,DW1,BP1,BP2,TP1,TP2,ALP
      READ1 ,DR,WR,DY2,TY2,TY,ALY
      READ1 ,HM,SM,AS,AC,ET,EB
      READ1 ,S,FK,FR,RC,RG,RP
      READ1 ,G2,DG2,ALG2,AL1
      READ1 ,GE,CS,CF,FS,EC,DF
      READ1 ,RS,GC,PT,C1,CW,CP
      READ1 ,EL,CM,CQ,DW,CC,PBA
      READ1 ,FF,CX,PC,EK,EW,TM
      READ1 ,A,WI,WC,WN,WT,WQ
      READ1 ,TG,FQ,BC1,BT1,BG1,FG
      READ1 ,P1,P2,P3,P4,P5,P7
      READ1 ,A2,AY2,AY,BP,BY,BY2
      READ1 ,BG2,FG2,FNL,AINL,CD,EPNL
      READ1,AP,PL,PLT,FC,FT
```

```
      XR=.0707*A*DF/(BG1*C1)
      XL=XR*(PC+EW)
      XD=90.*EC*PI*CM*DF/(2.*PX*(FG+FG2))
      XQ=CQ*XD/(CM*C1)
      XA=XL+XD
      XB=XL+XQ
      VR=3.1416*DR*RPM/12.
      AGE=((2.*FG+FG2)/(2.*FG))*GE
      PGE=3.19*TP*SS*CP/GE
      PEE=P1+P2+P3+P4+P5
      XF=(XR*PX/SS)*((C1/CP)**2*PGE*PGE)        /(6.28*PEE*(AGE/GE)**2)
      SI=PT*PT*PEE*1.E-8*COILS
      XU=XL+XF
      XS=.88*XU
      XX=XS
      XY=XB
      XN=.5*(XX+XY)
      ALA=6.38*DI/(PX*GE)
      IF(W)414,415,414
  415 XO=0.
      GO TO 422
  414 IF(CS-1.)417,418,417
  418 AKX=1.
      AKX1=1.
      GO TO 419
  417 AA=(3.*YY/(PN*QN))
      AKX=AA-2.
      IF(AA/3.-.667)420,420,421
  420 AKX1=.75*AA-.25
```

```
      GO TO 419
  421 AKX1=.75*AA+.25
  419 ABL=(AKX/(CF**2))*.07*ALA
      XO=AKX*(ABL+PC)/AKX1
      XO=XR*(XO+(1.667*(HX+3.*HZ))/(PN*QN*CF**2*DF**2*BS)+.2*EW)
  422 TC=SI/(FK*COILS)
      RA=PN*PI*PI*RG/(VA*1000.)
      TA=XN/(628.32*F*RA)
      T5=XS*TC/XA
      T4=2./F
      FSC=XA*FG
      SCR=FNL/FSC
      PRINT3,AC,A,S,XR,HM,XL,RG,XD,RP,XQ,ET,XA,EB,XB,PC,XF,EW,SI,WC,XU
      PRINT3,WI,XS,TP,XX,WR,XY,VR,XN,AS,XO,FK,TC,FR,TA,RC,T5,P1,T4
      PRINT3,P2,TG,P3,FQ,P4,BG1,P5,BT1,P7,BC1,FSC,FT,SCR,FC
      PRINT870,FG
      PUNCH1,BO,GC,PI,PN,EP,ET
      PUNCH1,EB,SC,C,XB,XD,PF
      PUNCH1,EE,TG,BT1,FQ,BC1,FG
      PUNCH1,HS,DU,HC,PX,P1,P2
      PUNCH1,P3,P4,P5,P7,BP,ALP
      PUNCH1,BG2,A2,G2,AY2,AY,BY2
      PUNCH1,DY2,BY,ALY,PT,AS,FK
      PUNCH1,XA,RG,WF,WQ,WT,WN
      PUNCH1,SNL,POL,RP,FR,PL,PLT
      PUNCH1,FC,AINL,CD,EPNL,FNL,FT
      PUNCH1,COILS,AP
      PAUSE
      END
```

PASS 7

```
      DIMENSION GB(4),AE(4),DX(4)
    1 FORMAT(E11.5,E11.5,E11.5,E11.5,E11.5,E11.5)
      READ1 ,BO,GC,PI,PN,EP,ET
      READ1 ,EB,SC,C,XB,XD,PF
      READ1 ,EE,TG,BT1,FO,BC1,FG
      READ1 ,HS,DU,HC,PX,P1,P2
      READ1 ,P3,P4,P5,P7,BP,ALP
      READ1 ,BG2,A2,C2,AY2,AY,BY2
      READ1 ,DY2,BY,ALY,PT,AS,FK
      READ1 ,XA,RG,WF,WQ,WT,WN
      READ1,SNL,POL,RP,FR,PL,PLT
      READ1 ,FC,AINL,CD,EPNL,FNL,FT
      READ1 ,COILS,AP
      AXX=BO/GC
      IF(AXX-1.)964,965,964
  965 AKSC=2.6
      GO TO 957
  964 IF(AXX-3.75)955,955,956
  955 AKSC=10.**.178/((AXX-1.)**.334)
      GO TO957
  956 AKSC=10.**.11/((AXX-1.)**.174)
  957 XX1=PI*PI*PN
      XX3=3.*EP*PI*PF
      XX2=(ET+EB)/2.-1.
      XX4=AKSC*PI*SC/(C*FG)
      GB(1)=1.
      GB(2)=1.5
      GB(3)=2.
```

```
      GB(4)=POL
      AN=ATAN(SQRT(1.-PF*PF)/PF)
      AN1=SIN(AN)
      DO 777 K=1,4
      YB=GB(K)
      AA    =ATAN((AN1+XB*YB/100.)/PF)
      AE(K)=COS(AA-AN)+XA*SIN(AA)*YB/100.
  777 DX(K)=.93*XD*YB*SIN(AA)/100.
      PUNCH1,AE(1),AE(2),AE(3),AE(4)
      PUNCH1,DX(1),DX(2),DX(3),DX(4
      PUNCH1,BO,GC,PI,PN,EP,ET
      PUNCH1,EB,SC,C,XB,XD,PF
      PUNCH1,EE,TG,BT1,FO,BC1,FG
      PUNCH1,HS,DU,HC,PX,P1,P2
      PUNCH1,P3,P4,P5,P7,BP,ALP
      PUNCH1,BG2,A2,G2,AY2,AY,BY2
      PUNCH1,DY2,BY,ALY,PT,AS,FK
      PUNCH1,XA,RG,VF,VO,VT,VN
      PUNCH1,XX1,XX2,XX3,XX4,SHL,POL
      PUNCH1,RP,FR,PL,PLT,FC,FT
      PUNCH1,ATNL,CD,EPNL,FNL,COILS,AP
      PAUSE
      END
```

PASS 8

```
      DIMENSION AI(90)
      DIMENSION AE(4),DX(4),BPL(4),BYL(4),BY2L(4),BG2L(4),PLL(4),PTLL(4)
      DIMENSION  FFL(4),AIFL(4),CDD(4),EPFL(4)
    1 FORMAT(E11.5,E11.5,E11.5,E11.5,E11.5,E11.5)
  888 FORMAT(F10.0,F10.0,F10.0,F10.0,F10.0,F10.0)
      K=1
  823 READ888,AI(K),AI(K+1),AI(K+2),AI(K+3),AI(K+4),AI(K+5)
      K=K+6
      IF(K-89)823,824,824
  824 READ1 ,AE(1),AE(2),AE(3),AE(4)
      READ1 ,DX(1),DX(2),DX(3),DX(4)
      READ1 ,BO,GC,P1,PH,EP,ET
      READ1 ,EB,SC,C,XB,XD,PF
      READ1 ,EE,TC,BT1,FO,BC1,FG
      READ1 ,HS,DU,HC,PX,P1,P2
      READ1 ,P3,P4,P5,P7,BP,ALP
      READ1 ,BG2,A2,G2,AY2,AY,BY2
      READ1 ,DY2,BY,ALY,PT,AS,FK
      READ1 ,XA,BG,VF,VO,VT,VN
      READ1,XX1,XX2,XX3,XX4,SNL,POL
      READ1,RP,FR,PL,PLT,FC,FT
      READ1 ,AINL,CD,EPNL,FNL,COILS,AP
      LOAD=2
      DO 900 J=1,4
      AED=AE(J)
      AA=AED*FG+(1.-PF)*FT+FC
      PLL(J)=PL*AA /(FG+FT+FC)
      PR     = PLT*(AED-DX(J))
```

```
      PTLL(J)=PR+PLL(J)/PX
      X=PTLL(J)/AP
      BPL(J)=X
      BPL(J)=X
      NA=31
      K=1
      GO TO 802
841   FPL= AT* ALP
      PL7L=P7*.001*AA
      PG2L=(PTLL(J)*PX/2.)+PL7L
      BG2L(J)=PG2L/A2
      FG2L=BG2L(J)*G2/.00319
      IF(COILS-2.0)855,851,855
851   PL5L=P5*.001*(AA+FPL)
      PY2=PG2L+PL5L
      GO TO 852
855   PY2=PG2L
852   X=PY2/AY2
      BY2L(J)=X
      NA=61
      K=2
      GO TO 802
842   FY2L=AT*(DU-DY2)/2.
      IF(COILS-1.0)853,854,853
854   PL5L=.002*P5*(AA+FPL+FY2L+FG2L)
853   PYL=PY2+PL5L
      X=PYL/AY
      BYL(J)=
      NA=61
```

```
      K=3
      GO TO 802
843   FYL=ALY*AT
      FFL(J)=(FG2L+FYL+FPL+FY2L+AA)*2./COILS
      AIFL(J)=FFL(J)/PT
      CDD(J)=AIFL(J)/AS
900   EPFL(J)=AIFL(J)*FR
837   JA=JA/3
      PUNCH 860,JA
860   FORMAT (I3)
      IF(JA)861,862,861
861   DO 863 J=1,JA
      PUNCH1,PLL(J),PTLL(J),BY2L(J),BYL(J),BG2L(J),BPL(J)
863   PUNCH1,FFL(J),AIFL(J),CDD(J),EPFL(J)
862   PUNCH1,EE,TG,BT1,FQ,BC1,FG
      PUNCH1,HS,DU,HC,PX,P1,P2
      PUNCH1,P3,P4,P5,P7,BP,ALP
      PUNCH1,BG2,A2,G2,AY2,AY,BY2
      PUNCH1,DY2,BY,ALY,PT,AS,FK
      PUNCH1,XA,RG,VF,VQ,VT,VN
      PUNCH1,XX1,XX2,XX3,XX4,SNL,POL
      PUNCH1,RP,FR ,PF,COILS,AP
      PUNCH1,AINL,CD,EPNL,FNL,PL,PLT
      PAUSE
802   IF(AI(NA)-X)830,831,831
831   NA=NA+3
835   IF(AI(NA)-X)833,834,834
833   NA=NA+2
      GO TO 835
```

```
834 AX=AI(NA)
    BB1=AI(NA-2)
    DC=AI(NA+1)
    D=AI(NA-1)
    XX= (AX-BB1)/(.4343*(LOG(DC)-LOG(D+.0001)))
    Y=AX-XX*.4343*LOG(DC)
       AT=EXP(2.306*(X-Y)/XX)
    GO TO (838,839),LOAD
838 GO TO (806,807,808,809,810),K
839 JA=JA+1
    GO TO (841,842,843),K
830 GO TO (836,837),LOAD
836 PRINT 850,
850 FORMAT (17HMACHINE SATURATED)
    PAUSE
    END
```

PASS 9

```
      DIMENSION BPL(4),BG2L(4),FFL(4),AIFL(4),CDD(4),EPFL(4),FCUL(4)
      DIMENSION  WNL(4),STTL(4),SCUL(4),EDDL(4),TOTL(4).PEFF(4),GB(4)
      DIMENSION PLL(4),PTLL(4),BYL(4),BY2L(4)
  961 FORMAT(F11.3,8X F11.3,F11.3,F11.3,F11.3)
  860 FORMAT (I3)
    1 FORMAT (E11.5,E11.5,E11.5,E11.5,E11.5,E11.5)
      DO 705  N=1,4
      PLL(N)=0
      PTLL(N)=0
      BPL(N)=0
      BG2L(N)=0
      BYL(N)=0
      BY2L(N)=0
      FFL(N)=0
      AIFL(N)=0
      CDD(N)=0
      EPFL(N)=0
      FCUL(N)=0
      WNL(N)=0
      STTL(N)=0
      SCUL(N)=0
      EDDL(N)=0
      TOTL(N)=0
  705 PEFF(N)=0
      READ860,JA
      IF(JA)702,703,702
  702 DO 704 J=1,JA
      READ1 ,PLL(J),PTLL(J),BY2L(J),BYL(J),BG2L(J),BPL(J)
```

```
704 READ1 ,FFL(J),AIFL(J),CDD(J),EPFL(J)
703 READ1 ,EE,TG,BT1,FO,BC1,FG
    READ1 ,HS,DU,HC,PX,P1,P2
    READ1 ,P3,P4,P5,P7,BP,ALP
    READ1 ,BG2,A2,G2,AY2,AY,BY2
    READ1 ,DY2,BY,ALY,PT,AS,FK
    READ1 ,YA,RG,VF,VO,VT,VN
    READ1 ,XX1,XX2,XX3,XX4,SHL,POL
    READ1 ,RP,FR ,PF,COILS,AP
    READ1 ,AINL,CD,EPNL,FNL,PL,PLT
    IF(SHL)707,706,707
707 PUNCH1,TG,BT1,FO,BC1,FG,HS
    PUNCH1,DU,HC,PX,P1,P2,P3
    PUNCH1,P4,P5,P7,AP,ALP,A2
    PUNCH1,G2,AY,AY2,DY2,ALY,COILS
    PUNCH1,EE
706 FEL=AINL*AINL*FK
    TL=FEL+VT+VO+VN+VF
    ABX=0
    IF(JA)714,712,714
714 IF(JA-4) 708,709,708
709 IF(POL)708,710,708
710 JA=JA-1
708 GB(1)=1.
    GB(2)=1.5
    GB(3)=2.
    GB(4)=POL
    DO 711 K=1,JA
    YB=GB(K)
```

```
      FCUL(K)=AIFL(K)**2*FR
      STTL(K)=((.0027*XA*YB)**2*2.+1.)*WT
      WNL(K)=((XX4*YB)**2+1.)*WN
      SCUL(K)=XX1*BP*YB
      EDDL(K)=SCUL(K)*XX2
      TOTL(K)=EDDL(K)+SCUL(K)+WNL(K)+STTL(K)+FCUL(K)+WQ+WF
  711 PEFF(K)=XX3*YB*100./(XX3*YB+TOTL(K))
  712 IF(POL)958,959,958
  958 PRINT961,PL,PLL(1),PLL(2),PLL(3),PLL(4)
      PRINT961,PLT,PTLL(1),PTLL(2),PTLL(3),PTLL(4)
      PRINT961,BP,BPL(1),BPL(2),BPL(3),BPL(4)
      PRINT961,BG2,BG2L(1),BG2L(2),BG2L(3),BG2L(4)
      PRINT961, BY,BYL(1),BYL(2),BYL(3),BYL(4)
      PRINT961,BY2,BY2L(1),BY2L(2),BY2L(3),BY2L(4)
      PRINT961,FNL,FFL(1),FFL(2),FFL(3),FFL(4)
      PRINT961,AINL,AIFL(1),AIFL(2),AIFL(3),AIFL(4)
      PRINT961,CD,CDD(1),CDD(2),CDD(3),CDD(4)
      PRINT961,EPNL,EPFL(1),EPFL(2),EPFL(3),EPFL(4)
      PRINT961,WQ,WQ,WQ,WQ,WQ
      PRINT961,WT,STTL(1),STTL(2),STTL(3),STTL(4)
      PRINT961,ABX,SCUL(1),SCUL(2),SCUL(3),SCUL(4)
      PRINT961,ABX,EDDL(1),EDDL(2),EDDL(3),EDDL(4)
      PRINT961,WN,WNL(1),WNL(2),WNL(3),WNL(4)
      PRINT961,FEL,FCUL(1),FCUL(2),FCUL(3),FCUL(4)
      PRINT961,WF,WF,WF,WF,WF
      PRINT961,TL,TOTL(1),TOTL(2),TOTL(3),TOTL(4)
      PRINT961,ABX,PEFF(1),PEFF(2),PEFF(3),PEFF(4)
      PAUSE
  959 PRINT961,PL,PLL(1),PLL(2),PLL(3)
```

```
PRINT961,PLT,PTLL(1),PTLL(2),PTLL(3)
PRINT961,BP,BPL(1),BPL(2),BPL(3)
PRINT961,BG2,BG2L(1),BG2L(2),BG2L(3)
PRINT961, BY,BYL(1),BYL(2),BYL(3)
PRINT961,BY2,BY2L(1),BY2L(2),BY2L(3)
PRINT961,EUL,EEL(1),EEL(2),EEL(3)
PRINT961,AIUL,AIEL(1),AIEL(2),AIEL(3)
PRINT961,CD,CDD(1),CDD(2),CDD(3)
PRINT961,EPUL,EPEL(1),EPEL(2),EPEL(3)
PRINT961,VO,VO,VO,VO
PRINT961,VT,STTL(1),STTL(2),STTL(3)
PRINT961,ABX,SCUL(1),SCUL(2),SCUL(3)
PRINT961,ABX,EDDL(1),EDDL(2),EDDL(3)
PRINT961,VN,VNL(1),VNL(2),VNL(3)
PRINT961,FEL,FCUL(1),FCUL(2),FCUL(3)
PRINT961,VF,VF,VF,VF
PRINT961,TL,TOTL(1),TOTL(2),TOTL(3)
PRINT961,ABX,PEFF(1),PEFF(2),PEFF(3)
PAUSE
END
```

```
PASS 10
      DIMENSION AI(90)
    1 FORMAT(E11.5,E11.5,E11.5,E11.5,E11.5,F11.5)
  888 FORMAT(F10.0,F10.0,F10.0,F10.0,F10.0,F10.0)
  878 FORMAT(F12.5.F12.5,F12.5,F12.5,F12.5,F12.5)
  879 FORMAT(F12.5,F12.5,F12.5,F12.5,F12.5,F12.5//)
      K=1
  823 READ888,AI(K),AI(K+1),AI(K+2),AI(K+3),AI(K+4),AI(K+5)
      K=K+6
      IF(K-89)823,824,824
  824 READ1,TG,BT1,FQ,BC1,FG,HS
     READ1,DU,HC,PX,P1,P2,P3
     READ1,P4,P5,P7,AP,ALP,A2
     READ1,G2,AY,AY2,DY2,ALY,COILS
      READ1,EE
     COREL=3.1416*(DU-HC)/(4.*PX)
      LOAD=1
      YB=.8
     DO 800 N=1,9
      R1=BT1*YB
      R2=FQ*YB
      R3=BC1*YB
      R4=FG*YB
      R5=EE*YB
      X=R1
      NA=1
      K=1
      GO TO 802
  806 FT=HS*AT
```

```
      X=R3
      K=2
      NA=1
      GO TO 802
807   FC=COREL*AT
      FS=FT+FC
      PL=(R4+FS)*(P1+P2+P3+P4)*.002
      PLT=R2+PL/PX
      BP=PLT/AP
      X=BP
      NA=31
      K=3
     GO TO 802
808   FP=ALP*AT
     PL7=.001*P7*(FC+FT+R4+FP)
      PG2=PLT*PX/2.+PL7
      BG2=PG2/A2
     FG2=BG2*G2/.00319
      IF(COILS-1.)814,815,814
814   PL5=.001*P5*(FG2+FP+R4+FT+FC)
      BY2=(PG2+PL5)/AY2
      GO TO 816
815   BY2=PG2/AY2
816   K=4
      NA=61
      GO TO 802
809   FY2=((DU-DY2)/6.)*AT
     IF(COILS-1.)817,818,817
818   PL5=.002*P5*(FG2+FY2+FP+R4+FT+FC)
```

```
817 BY=(PG2+PL5)/AY
    NA=61
    K=5
    GO TO 802
 10 FY=AT*ALY
    FNL=(FY+FY2+FG2+FP+R4+FT+FC)*2./COILS
    PRINT878,R5,R1,FT,R3,FC,R4
    PRINT879,PL,PLT,BP,BY2,BY,FNL
800 YB=YB+.1
    PAUSE
802 IF(AI(NA)-X)830,831,831
831 NA=NA+3
835 IF(AI(NA)-X)833,834,834
833 NA=NA+2
    GO TO 835
834 AX=AI(NA)
    BB1=AI(NA-2)
    DC=AI(NA+1)
    D=AI(NA-1)
    XX= (AX-BB1)/(.4343*(LOG(DC)-LOG(D+.0001)))
    Y=AX-XX*.4343*LOG(DC)
       AT=EXP(2.306*(X-Y)/XX)
    GO TO (838,839),LOAD
838 GO TO (806,807,808,809,810),K
839 JA=JA+1
    GO TO (841,842),K
830 GO TO (836,837),LOAD
836 PRINT 850,
850 FORMAT (17HMACHINE SATURATED)
```

THE SINGLE-COIL, OUTSIDE-COIL LUNDELL GENERATOR

The single-coil, outside-coil, Lundell generator is a variation of the same machine discussed in the section titled Two-Coil, Outside-Coil Lundell Generator.

The rotor and stator of the single-coil machine are identical to those of the two coil configuration. Leakage permeances around the stator and coil are different and the flux circuit is different. There can be only one long single loop or circuit for the flux of the single coil machine and there are two series loops for the two-coil machine.

The single outside coil Lundell probably should be used if the generator has only two poles. In the single coil configuration, there is no direct flux circuit from the stator into the yoke and the flux in the air-gap over each pole is more nearly equal. This reduces but does not eliminate the possibility of a rotating couple due to unbalanced pole fluxes.

There are two ways the two-pole Lundell can have an unbalance or a rotating magnetic couple on its rotor. In the two, outside coil Lundell, if the stator is mounted in the magnetic steel housing, there are two possible magnetic paths through the stator. Shown schematically, the two paths look like this -

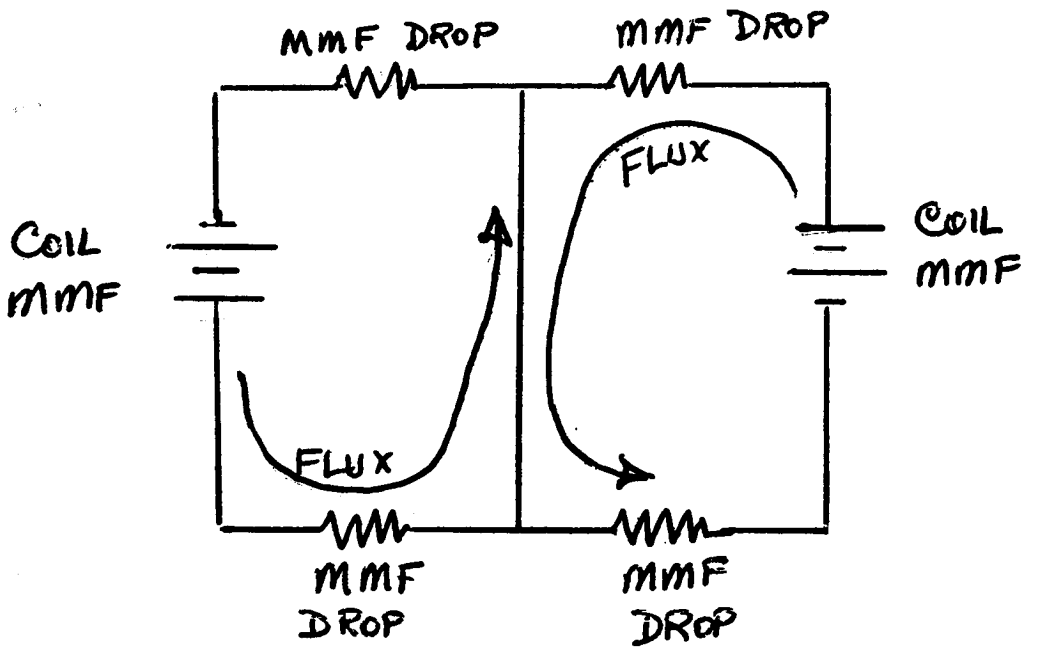

If the two fluxes are equal, the magnetic attraction between each rotor pole and the stator are equal. If the fluxes are different values because of different numbers of coil turns, varying magnetic permeability of yoke and end bells, difference in lengths of the auxiliary air-gaps, etc., one pole will have greater attractive force between it and the stator than the other pole has between it and the stator. This causes a rotating unbalance that increases with an increase in excitation.

If either the two-coil or single-coil, outside-coil Lundell is mounted in the housing with a large air-gap or non-magnetic spacer between the stator back-iron and the housing or yoke, the flux cannot easily cross the non-magnetic space and the flux in the two poles is more certain to be equal. In this case, the possible difficulty with rotor dynamics may be a rotating couple caused by the effective magnetic centers of the two poles being in different planes of rotation.

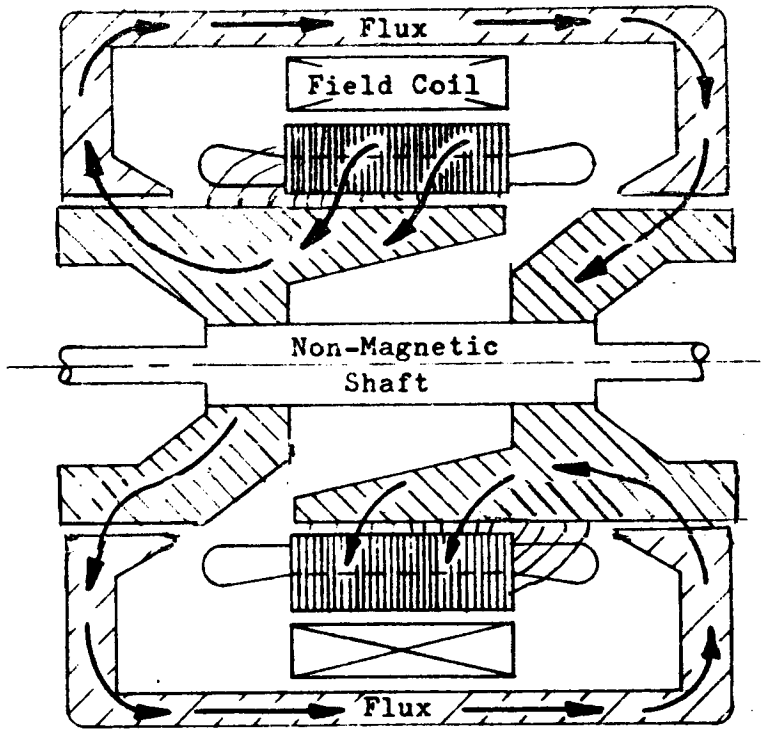

A two-pole Lundell generator with the excitation-coil external to the rotor can be built with the flux collector section of the shaft on the same diameter as the rotor diameter at the pole surface. This configuration is shown in the sketch above. The configuration causes a maximum amount of fringing flux to enter or leave the stator at the bases of the cantilevered poles and from that cause alone the magnetic center of the pole must shift away from a plane through the center of the stator.

If in addition, the poles are made trapezoidal as is commonly done in Lundell generators, the magnetic center of the pole is shifted away from the center-plane of the stator because of the markedly different amounts of flux passing from the pole to the stator on each side of the centerline of the stator. The combination of these two causes of displaced magnetic centers can cause a large rotating couple that varies with variation in excitation.

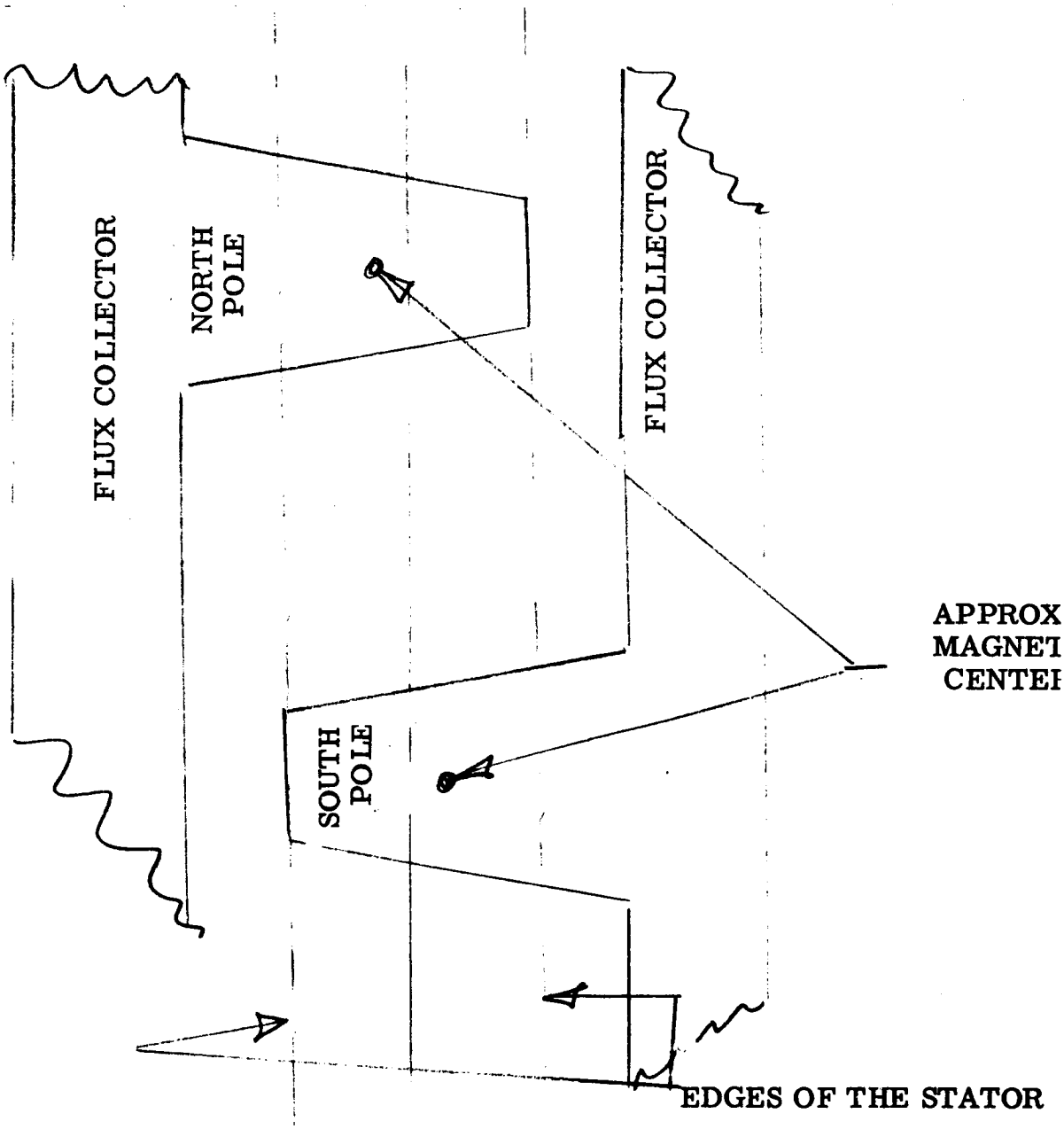

If the flux-collector section of the shaft is made appreciably smaller in diameter than the surface of the rotor poles and in addition if the poles are made rectangular in shape, the dynamic unbalance can be made to be small and conceivably can be made as small as desired. Rotating couples in such a case would be eliminated at the expense of increased weight.

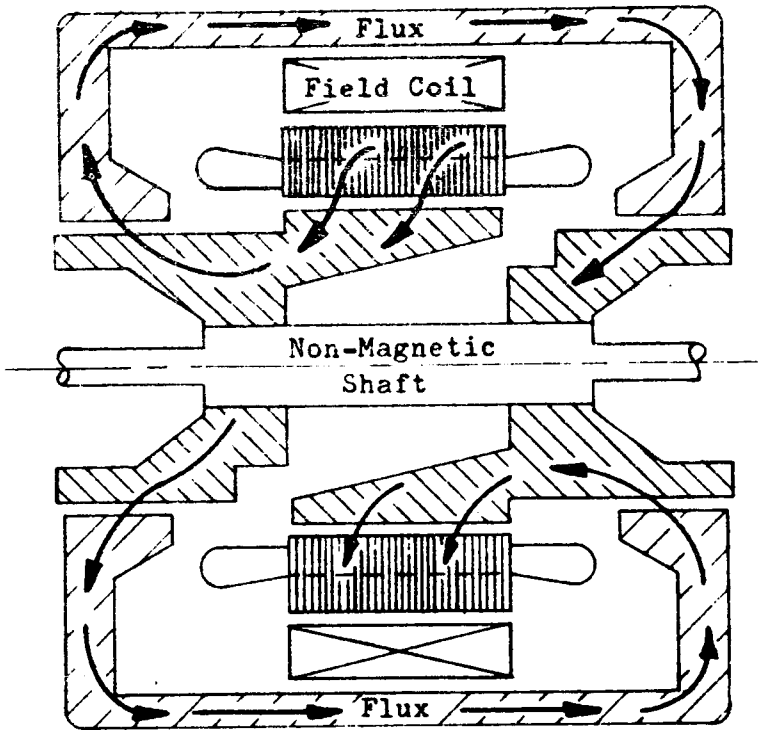

The sketch above shows the step-down shaft in the flux collector region. This reduces fringing flux at the base of the cantilevered pole and reduces the shift of the magnetic center of the pole away from a plane through the stator centerline.

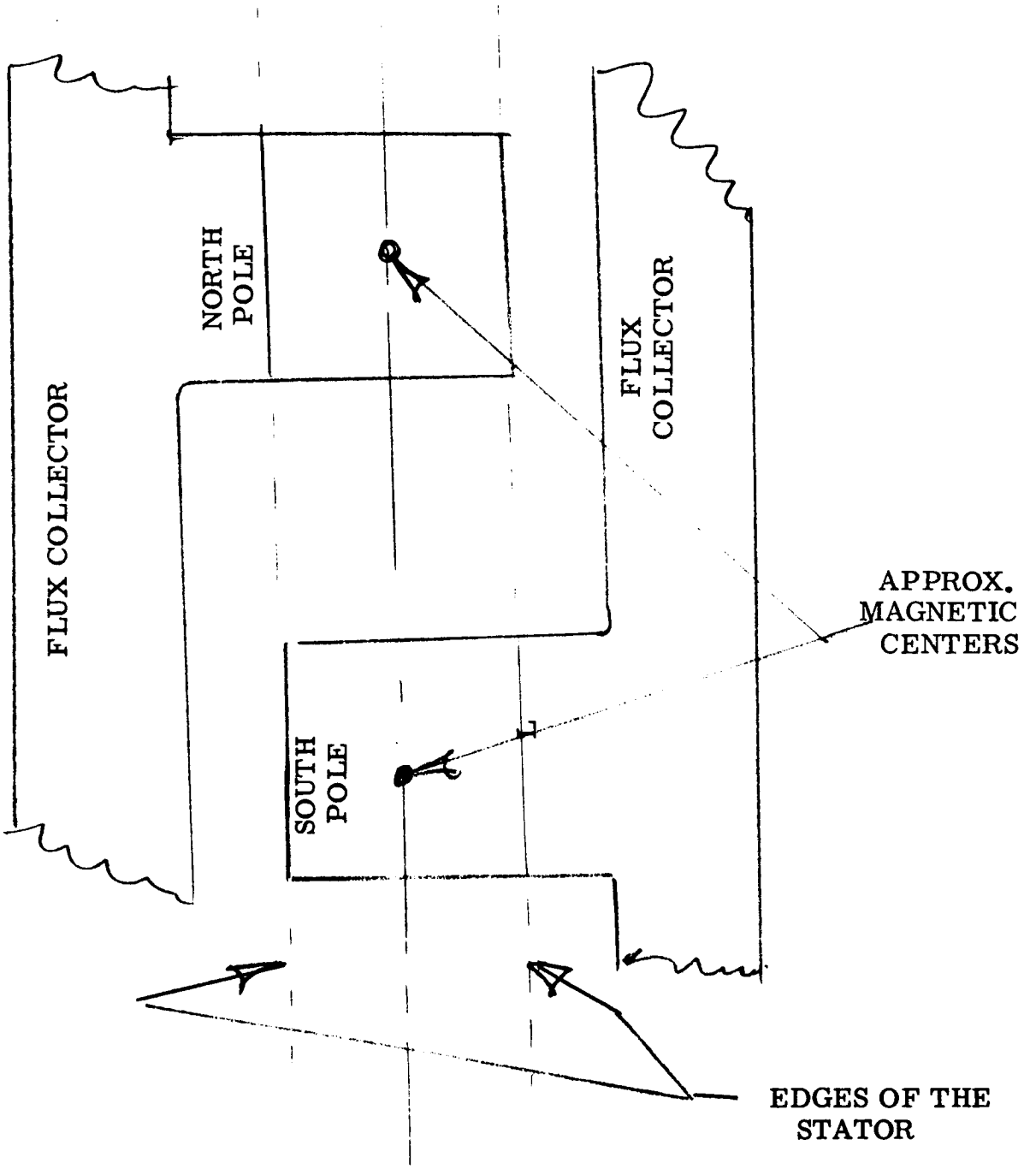

The sketch above shows the two poles made rectangular. The poles can be shaped so that no appreciable shift of the poles magnetic centers will occur.

See the section titled Two-Coil, Outside-Coil Lundell for the computer input and output sheets for both two-coil and single-coil machines.

See the same section for the symbol list, tables and material characteristics

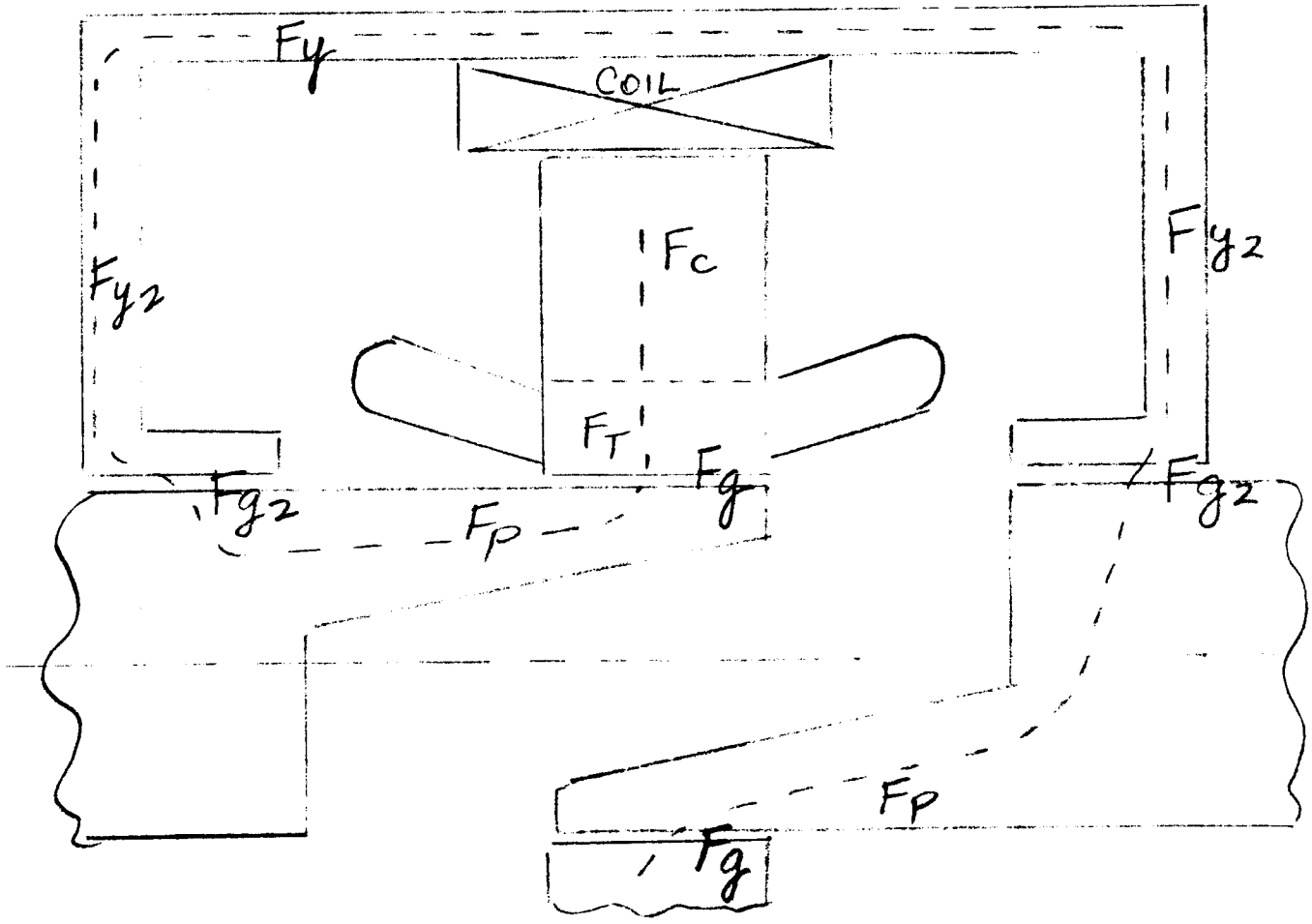

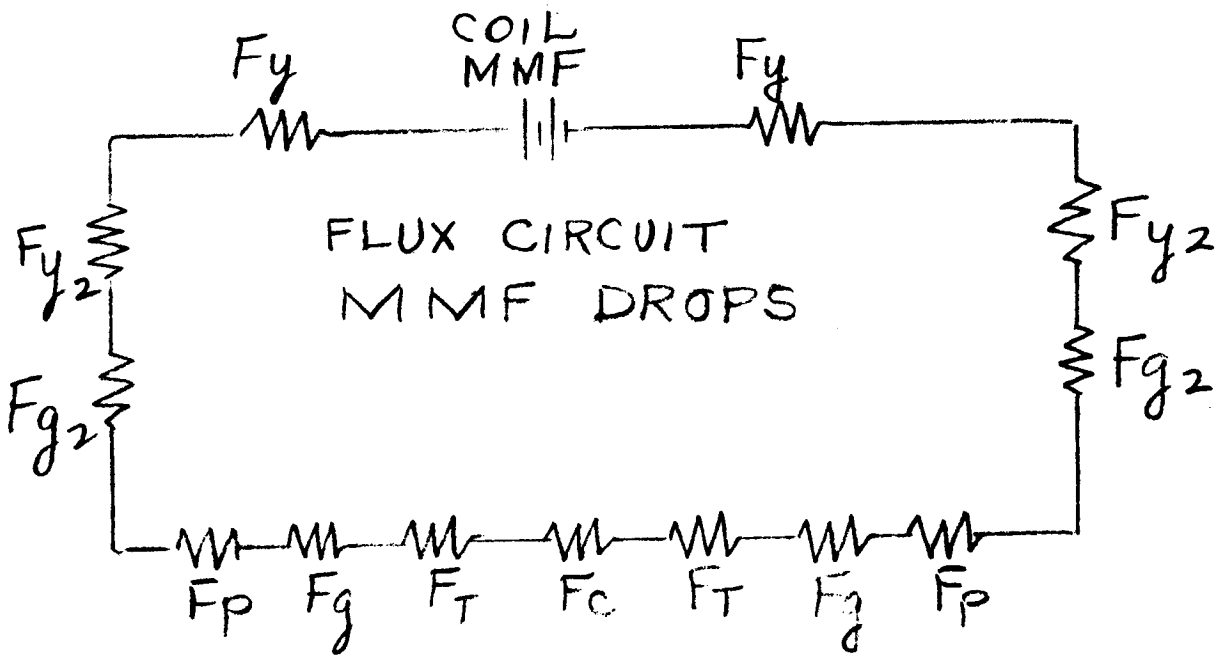

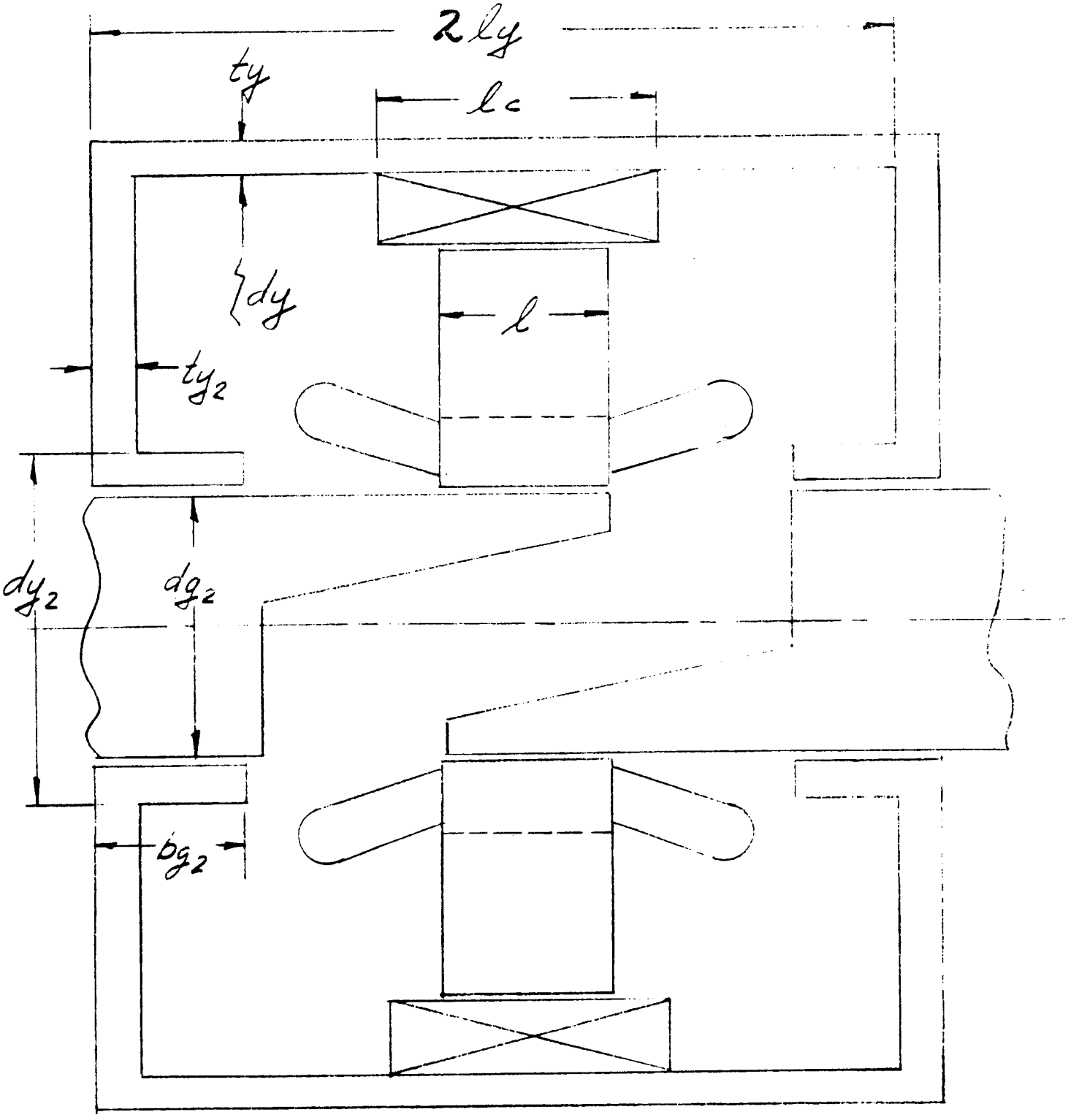
2ly
ty
lc
dy
l
ty2
dy2
dg2
bg2

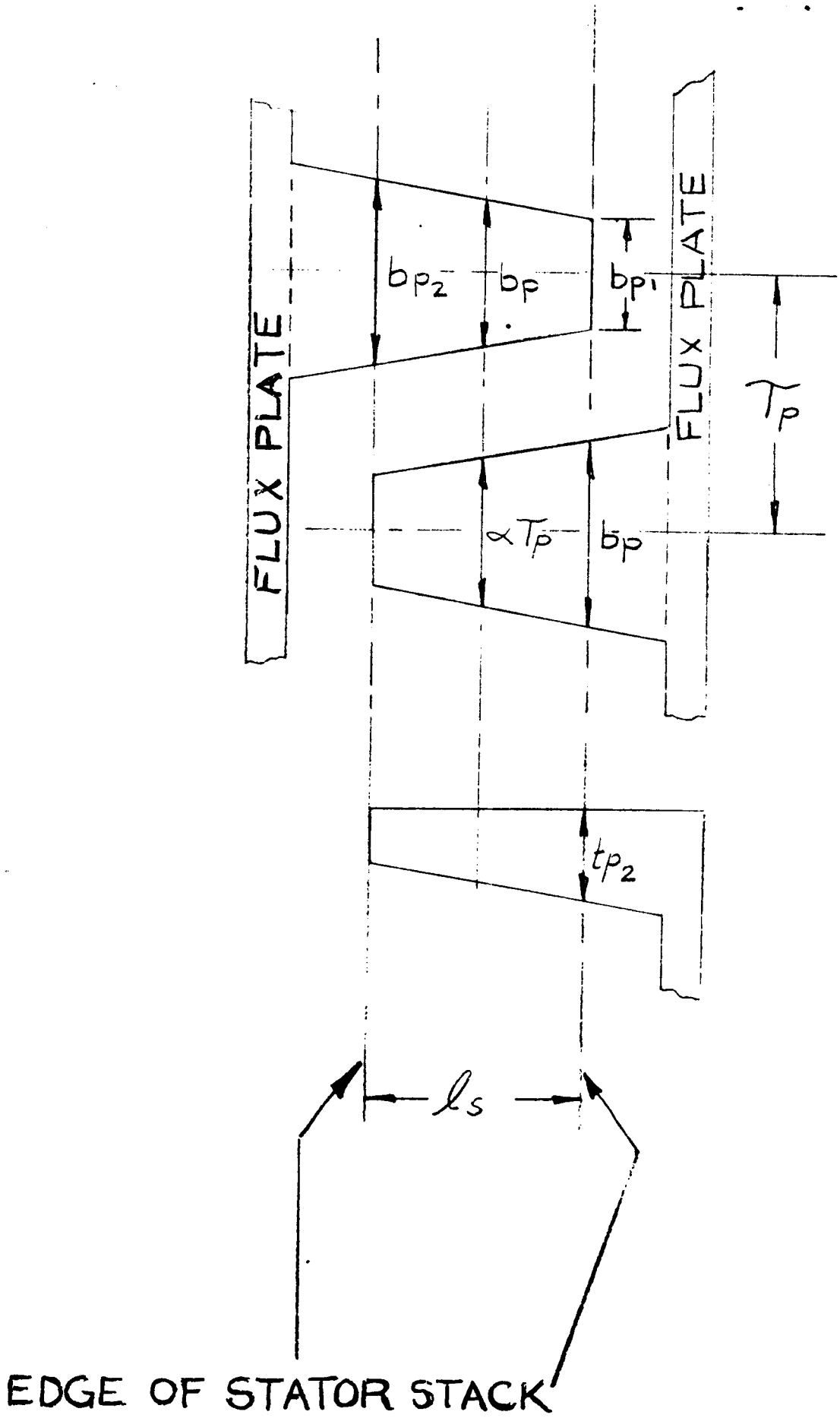
FLUX PLATE
FLUX PLATE
b_{p_2}
b_p
b_{p_1}
τ_p
$\alpha\tau_p$
b_p
t_{p_2}
ℓ_s
EDGE OF STATOR STACK

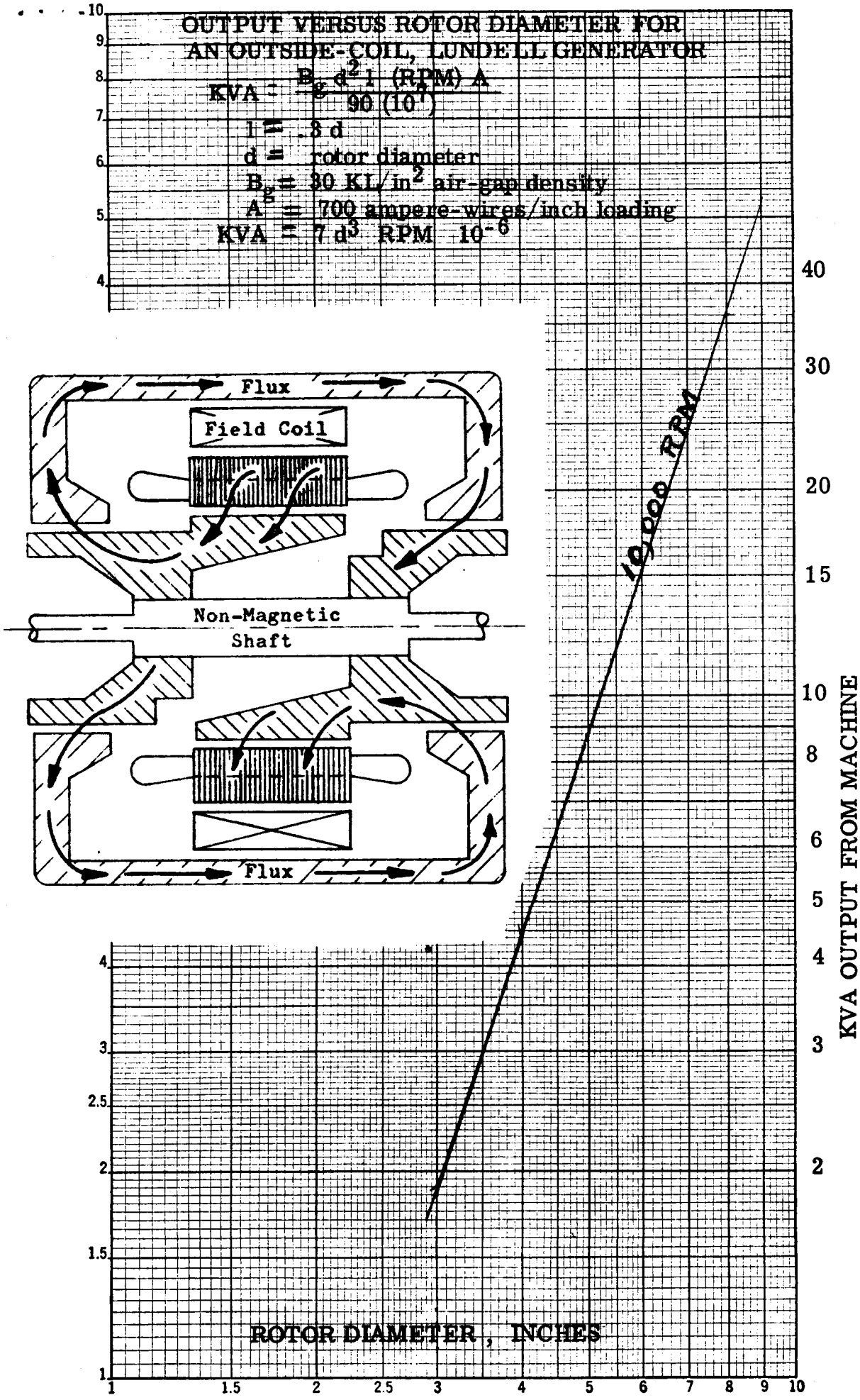

K+E LOGARITHMIC 359-103
KEUFFEL & ESSER CO. MADE IN U.S.A.
2 X 1 CYCLES

SINGLE-COIL, OUTSIDE COIL LUNDELL

(1)	--	DESIGN NUMBER - To be used for filing purposes
(2)	KVA	GENERATOR KVA
(3)	E	LINE VOLTS
(4)	E_{PH}	PHASE VOLTS - For 3 phase, Y [redacted] connected generator $E_{PH} = \frac{\text{(Line Volts)}}{\sqrt{3}} = \frac{(3)}{\sqrt{3}}$ For 3 phase, Δ [redacted] connected generator E_{PH} = (Line Volts) = (3)
(5)	m	PHASES - Number of
(5a)	f	FREQUENCY - In cycles per second
(6)	P	POLES - Number of
(7)	RPM	SPEED - In revolutions per minute
(8)	I_{PH}	PHASE CURRENT - In amperes at rated load
(9)	P.F.	POWER FACTOR - Given in per unit
(9a)	K_c	ADJUSTMENT FACTOR - When P.F. = 0. to .95 set K_c = 1.; when P.F. = .95 to 1. set K_c = 1.05
(10)	--	LOAD POINTS - The computer program is set up to have the 0.%, 100%, 150%, 200% load points as standard outputs. There is an additional space available on the output sheet for one optional load point. This optional

load point will be the designer's choice and can be selected anywhere in the range of 0 to 200% load. When an optional load calculation is required, insert the per unit load value on the input sheet. The optional load point will be calculated in addition to the standard points listed above. For example, insert .33 on the input sheet when the optional load calculation for 33% load is required in addition to the standard points.

If only the standard points are required, insert 0.0 on the input sheet and the optional load column will be blank.

(11) d STATOR PUNCHING I.D. - The inside diameter of the stator punching in inches.

(11a) d_r ROTOR O.D. - The outside diameter of the rotor in inches.

(12) D PUNCHING O.D. - The outside diameter of the stator punching in inches.

(13) GROSS STATOR CORE LENGTH - In inches.

(14) n_v RADIAL DUCTS - Number of.

(15) b_v RADIAL DUCT WIDTH - In inches.

(16) K_i STACKING FACTOR - This factor allows for the coating (core plating) on the punchings, the burrs due to slotting, and the deviations in flatness. Approximate values of K_i are given in Table IV.

THICKNESS OF LAMINATIONS (INCHES)	GAGE	K_i
.014	29	0.92
.018	26	0.93
.025	24	0.95
.028	23	0.97
.063	--	0.98
.125	--	0.99

TABLE IV

(17) ℓ_s SOLID CORE LENGTH - The solid length is the gross length times the stacking factor. If ventilating ducts are used, their length must be subtracted from the gross length also.

$$\ell_s = (K_i)\left[(\ell) - (n_v)\ (b_v)\right] = (16)\left[(13) - (14)\ (15)\right]$$

(18) MATERIAL - This input is used in selecting the proper magnetization curves for stator;

yoke; AND pole; when different materials are used. Separate spaces are provided on the input sheet for each section mentioned above. Where curves are available on card decks, used the proper identifying code. Where card decks are not available submit data in the following manner:

The magnetization curve must be available on semi-log paper. Typical curves are shown in this manual on Curves 15 and 16. Draw straight line segments through the curve starting with zero density. Record the coordinates of the points where the

straight line segments intersect. Submit these coordinates as input data for the magnetization curve. The maximum density point must be submitted first.

Refer to Figure below for complete sample

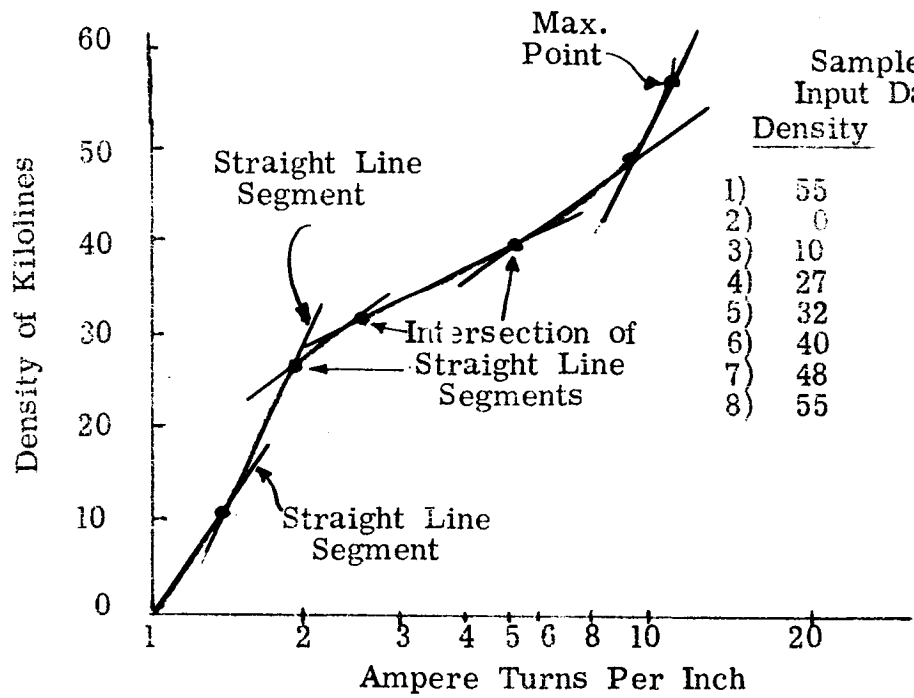

Sample Input Data

	Density	NI
1)	55	Max.
2)	0	0
3)	10	1.5
4)	27	1.9
5)	32	2.5
6)	40	4.9
7)	48	9.0
8)	55	12.0

(19) k WATTS/LB - Core loss per lb of stator lamination material. Must be given at the density specified in (20).

(20) B DENSITY - This value must correspond to the density used in Item (19) to pick the watts/lb. The density that is usually used is 77.4 kilolines/in^2.

(21)	1
	2
	3
	4
	5
		<u>TYPE OF STATOR SLOT</u> - Refer to Figure 1, Page for type of slot.
		For (a) slot use 1. as an input
		For (b) slot use 2. as an input
		For (c) slot use 3. as an input
		For (d) slot use 4. as an input
		Type 5. is not a slot but instead a particular situation for an open slot where the winding has only one conductor per slot.

(22)	b_0 b_1 b_2 b_3 b_s h_0 h_1 h_2 h_3 h_s h_t h_w	<u>ALL SLOT DIMENSIONS</u> - Given in inches per Figure 1, Page . Where the dimension does not apply to the slot being used, insert 0. on input sheet. FOR TYPE (c) SLOT $b_s = \frac{(b_1)+(b_3)}{2} = \frac{(22)+(22)}{2}$
(23)	Q	<u>STATOR SLOTS</u> - Number of.
(24)	h_c	<u>DEPTH BELOW SLOTS</u> - The depth of the stator core below the slots.

Due to mechanical strength reasons, h_c should never be less than 70% of h_s.

$$h_c = \frac{(D) - \left[(d) + 2(h_s)\right]}{2} = \frac{(12) - \left[(11) + 2(22)\right]}{2}$$

(25) q

SLOTS PER POLE PER PHASE

$$q = \frac{(Q)}{(P)\ (m)} = \frac{(23)}{(6)\ (5)}$$

(26) τ_s

STATOR SLOT PITCH

$$\tau_s = \frac{\pi(d)}{Q} = \frac{\pi(11)}{(23)}$$

(27) $\tau_{s1/3}$

STATOR SLOT PITCH - 1/3 distance up from narroweet section. For slot (a), (b), (c), and (e)

$$\tau_{s1/3} = \frac{\pi\left[(d) + .66(h_s)\right]}{(Q)} = \frac{\pi\left[(11) + .66\ (22)\right]}{(23)}$$

For slot (d)

$$\frac{\pi\left[(d) + 2(h_0) + 1.32(b_s)\right]}{(Q)} =$$

$$\frac{\pi\left[(11) + 2(22) + 1.32(22)\right]}{(23)}$$

(28) --

TYPE OF WINDING - Record whether the connection is "wye" of "delta". For "wye" conn use 1. for input. For "delta" use 0. for input.

(29) --

TYPE OF COIL - Record whether random wound or formed coils are used. For random wound coils use 0. for input. For formed coils use 1. for input.

(30)	n_S	CONDUCTORS PER SLOT - The actual number of conductors per slot. For random wound coils use a space factor of 75% to 80%. Where space factor is the percent of the total slot area that is available for insulated conductors after all other insulation areas have been subtracted out.
(31)	Y	THROW - Number of slots spanned. For example, with a coil side in slot 1 and the other coil side in slot 10, the throw is 9.
(31a)		PER UNIT OF POLE PITCH SPANNED - Ratio of the number of slots spanned to the number of slots in a pole pitch. This value must be between 1.0 and 0.5 to satisfy the limits of this program. $= \frac{(Y)}{(m)\ (q)} = \frac{(31)}{(5)\ (25)}$
(32)	C	PARALLEL PATHS, No. of - Number of parallel circuits per phase.
(33)	--	STRAND DIA. OR WIDTH - In inches. For round wire, use strand diameter. For rectangular wire, use strand width. This must be the largest of the two dimensions given for a ractangular wire.
(34)	N_{ST}	NUMBER OF STRANDS PER CONDUCTOR IN DEPTH - Applies to rectangular wire. In order to have a more flexible conductor and reduce eddy current loss, a stranded conductor is often used. For

example, when the space available for one conductor is .250 width x .250 depth, the actual conductor can be made up of 2 or 3 strands in depth as shown

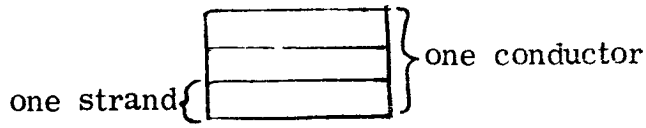

For a more detailed explanation refer to section titled "Effective Resistance and Eddy Factor" in the Derivations in Appendix.

(34a) N'_{ST} NUMBER OF STRANDS PER CONDUCTOR - This number applies to the strands in depth and/or width and is used in calculating the conductor area. Item (34) is different in that it deals with strands in depth only and is used in calculating eddy factors.

(35) d_b DIAMETER OF BENDER PIN - in inches - This pin is used in forming coils. Use .25 inch for stator O.D. $<$ 8 inches use .50 inches for stator O.D. $>$ 8 inches.

(36) ℓ_{e2} COIL EXTENSION BEYOND CORE in Inches - Straight portion of coil that extends beyond stator core.

(37) h_{ST} HEIGHT OF UNINSULATED STRAND in Inches - This value is the vertical height of the strand and is used in eddy factor calculations. Set this value = 0 for round wire.

(38) h'_{ST} DISTANCE BETWEEN CENTERLINES OF STRANDS IN DEPTH in inches.

(39)	--	STATOR COIL STRAND THICKNESS in inches - For rectangular conductors only. For round wire insert 0. on input sheet. This must be the narrowest dimension of the two dimensions given for a rectangular wire.
(40)	τ_{SK}	SKEW - Stator slot skew in inches at stator I.D.
(41)	τ_P	POLE PITCH in inches. $\tau_P = \frac{\pi(d)}{(P)} = \frac{\pi(11)}{(6)}$
(42)	K_{SK}	SKEW FACTOR - The skew factor is the ratio of the voltage induced in the coils to the voltage that would be induced if there were no skew. When $\tau_{SK} = 0$, $K_{SK} = 1$ $K_{SK} = \frac{\sin\left[\frac{\pi(\tau_{SK})}{2(\tau_P)}\right]}{\frac{\pi(\tau_{SK})}{2(\tau_P)}} = \frac{\sin\left[\frac{\pi(40)}{2(41)}\right]}{\frac{\pi(40)}{2(41)}}$
(42a)		PHASE BELT ANGLE - Input For phase belt angle = 60° insert 60 on input sheet. For phase belt angle = 120° insert 120 on input sheet.
(43)	K_d	DISTRIBUTION FACTOR - The distribution factor is the ratio of the voltage induced in the coils to the voltage that would be induced if the windings

were concentrated in a single slot. See Table 2 for compilation of distribution factors for the various harmonics.

For 60° phase belt angle and q = integer when (42a) = 60 and (25) = integer.

$$K_d = \frac{\text{Sin } 30^o}{(q)\ \text{Sin}\left[30/(q)\right]} = \frac{\text{Sin } 30^o}{(25)\ \text{Sin}\left[30/(25)\right]}$$

For 60° phase belt angle and (q) $\neq$ integer = N/B reduced to lowest terms.

When (43a) = 1 and (25) $\neq$ integer = N/B reduced to lowest terms

$$K_d = \frac{\text{Sin } 30^o}{(N)\ \text{Sin}\left[30/(N)\right]} = \frac{\text{Sin } 30^o}{(43)\ \text{Sin}\left[30/(43)\right]}$$

For 120° phase belt angle and (q) = integer

When (43a) = 120 and (25) = integer

$$K_d = \frac{\text{Sin } 60^o}{2(q)\ \text{Sin}\left[30/(q)\right]} = \frac{\text{Sin } 60^o}{2(25)\ \text{Sin}\left[30/(25)\right]}$$

For 120° phase belt angle and q $\neq$ integer

When (43a) = 120 and (25) $\neq$ integer = N/B reduced to lowest terms

$$K_d = \frac{\text{Sin } 60^o}{2(N)\ \text{Sin}\left[30/(N)\right]} = \frac{\text{Sin } 60^o}{2(43)\ \text{Sin}\left[30/(43)\right]}$$

(44) K_P

PITCH FACTOR - The ratio of the voltage induced in the coil to the voltage that would be induced in a full pitched coil. See Table 1 for compilation of the pitch factors for the various harmonics.

$$K_P = \sin\left[\frac{(Y)}{(m)(q)} \times 90^o\right] = \sin\left[\frac{(31)}{(5)(25)} \times 90^o\right]$$

(45) n_e

TOTAL EFFECTIVE CONDUCTORS - The actual number of effective series conductors in the stator winding taking into account the pitch and skew factors but not allowing for the distribution factor.

$$n_e = \frac{(Q)(n_s)(K_P)(K_{SK})}{(C)} = \frac{(23)(30)(44)(42)}{(32)}$$

(46) a_c

CONDUCTOR AREA OF STATOR WINDING in $(\text{inches})^2$ - The actual area of the conductor taking into account the corner radius on square and rectangular wire. See the following table for typical values of corner radii

If (39) = 0 then $a_c = .25\pi(\text{Dia})^2 = .25\pi(33)^2$

If (39) $\neq$ 0 then $a_c = (N'_{ST})\left[(\text{strand width})(\text{strand depth}) - (.858\ r_c^2)\right] = (34a)\left[(33)(39) - (.858\ r_c^2)\right]$

where $.858\ r_c^2$ is obtained from Table V below.

(39)	(33) .188	.189 (33) .75	(33) .751
.050	.000124	.000124	.000124
.072	.000210	.000124	.000124
.125	.000210	.00084	.000124
.165	.000840	.00084	.003350
.225	.001890	.00189	.003350
.438	--	.00335	.007540
.688	--	.00754	.01340
--	--	.03020	.03020

TABLE V

(47) S_S

CURRENT DENSITY - Amperes per square inch of stator conductor

$$S_S = \frac{(I_{PH})}{(C)(a_c)} = \frac{(8)}{(32)(46)}$$

(48) L_E

END EXTENSION LENGTH in inches - Can be an input or output.

For L_E to be output, insert 0. on input sheet.

For L_E to be input, calculate per following:

When (29) = 0. then:

$$L_E = .5 + \frac{K_T \pi (Y)\left[(d)+(h_s)\right]}{Q} = .5 + \frac{\begin{Bmatrix} 1.3 \text{ If } (6) = 2 \\ 1.5 \text{ If } (6) = 4 \\ 1.7 \text{ If } (6) = 4 \end{Bmatrix} \pi (31)\left[(11)+(22)\right]}{(23)}$$

When (29) = 1. then:

$$L_E = 2\ell_{e2} + \pi\left[\frac{h_1}{2} + \text{dia}\right] + y\left[\frac{\tau_s^2}{\sqrt{\tau_s^2 - b_s^2}}\right]$$

$$= 2 \quad (36) + \pi\left[\frac{(22)}{2} + (35)\right] + (31)\left[\frac{(26)^2}{\sqrt{(26)^2 - (22)^2}}\right]$$

(49) ℓ_t

1/2 MEAN TURN - The average length of one conductor in inches.

$$\ell_t = (\ell) + (L_E) = (13) + (44)$$

(50) $X_s{}^oC$

STATOR TEMP ^oC - Input temp at which F.L. losses will be calculated. No load losses and cold resistance will be calculated at 20^oC.

(51) ρ_s

RESISTIVITY OF STATOR WINDING - In micro ohm-inches @ $20^{o}C$. If tables are available using units other than that given above, use Table VI for conversion to ohm-inches.

ρ	ohm-cm	ohm-in	ohm-cir mil/ft
1 ohm-cm =	1.000	0.3937	6.015×10^{6}
1 ohm-in =	2.540	1.000	1.528×10^{7}
1 ohm-cir mil/ft =	1.662×10^{-7}	6.545×10^{-8}	1.000

TABLE VI
Conversion Factors for Electrical Resistivity

(52) $\rho_{s(hot)}$

RESISTIVITY OF STATOR WINDING - Hot at $X_s{}^{o}C$ in micro ohm-inches

$$\rho_{S(hot)} = (\rho_S)\left[\frac{(X_s{}^{o}C) + 234.5}{254.5}\right] = (51)\left[\frac{(50) + 234.5}{254.5}\right]$$

(53) $R_{SPH(cold)}$

STATOR RESISTANCE/PHASE - Cold @ $20^{o}C$ in ohms

$$R_{SPH(cold)} = \frac{(\rho_s)(n_s)(Q)(\ell_t)}{(m)(a_c)(C)^2} \times 10^{-6} = \frac{(51)(30)(23)(49)}{(5)(46)(32)^2} \times 10^{-6}$$

(54) $R_{SPH(hot)}$

STATOR RESISTANCE/PHASE - Calculated @ $X^{o}C$ in ohms

$$R_{SPH(hot)} = \frac{(\rho_s\ hot)(n_s)(Q)(\ell_t)}{(m)(a_c)(C)^2} \times 10^{-6} \frac{(52)(30)(23)(49)}{(5)(46)(32)^2} \times 10^{-6}$$

(55) EF (top)

EDDY FACTOR TOP - The eddy factor of the top coil. Calculate this value at the expected operating temperature of the machine. For round wire $EF_{top} = 1$

$$EF_{top} = 1 + \left\{ .584 + \left[\frac{N_{st}^2 - 1}{16}\right]\left[\frac{h'_{st}\ell}{h_{st}\ell_t}\right]^2 \right\} 3.35 \times 10^{-3} \left[\frac{(h_{st})(n_s)(f)(a_c)}{(b_s)(\rho_{S\,hot})}\right]^2$$

$$= 1 + \left\{ .584 + \left[\frac{(34)^2 - 1}{16}\right]\left[\frac{(38)(13)}{(37)(49)}\right]^2 \right\} 3.35 \times 10^{-3} \left[\frac{(37)(30)(5a)(46)}{(22)(52)}\right]^2$$

(56) EF (bot)

EDDY FACTOR BOTTOM - The eddy factor of the bottom coil at the expected operating temperature of the machine. For round wire $EF_{(bot)} = 1$

$$EF_{(bot)} = (EF_{(top)}) - 1.677 \left[\frac{(h_{st})(n_s)(f)(a_c)}{(b_s)(\rho_{S\,hot})}\right]^2 \times 10^{-3}$$

$$= (55) - 1.677 \left[\frac{(37)(30)(5a)(46)}{(22)(52)}\right] 10^{-3}$$

(57) b_{tm}

STATOR TOOTH WIDTH 1/2 way down tooth in inches - For slots type (a), (b), (d) and (e), Figure I

$$b_{tm} = \frac{\pi\left[(d) + (h_s)\right]}{(Q)} - (b_s) = \frac{\pi\left[(11) + (22)\right]}{(23)} - (22)$$

For slot type (c), Figure I

$$b_{tm} = \frac{\pi\left[(d) + 2(h_s)\right]}{(Q)} - (b_3) = \frac{\pi\left[(11) + 2(22)\right]}{(23)} - (22)$$

(57a) b_t 1/3 STATOR TOOTH WIDTH - 1/3 distance up from narrowest section

For slots type (a), (b) and (e)

$$b_t\ 1/3 = (\tau_s\ 1/3) - (b_s) = (27) - (22)$$

For slot type (c)

$$b_t\ 1/3 = b_{tm} = (57)$$

For slot type (d)

$$b_t\ 1/3 = (\tau_{1/3}) - \frac{2\sqrt{2}}{3}(b_s) = (27) - .94(22)$$

(58) b_t TOOTH WIDTH AT STATOR I. D. in inches -

For partially closed slot

$$b_t = \frac{\pi(d)}{(Q)} - b_0 = \frac{\pi(11)}{(23)} - (22)$$

For open slot

$$b_t = \frac{\pi(d)}{(Q)} - b_s = \frac{\pi(11)}{(23)} - (22)$$

(59) g MAIN AIR GAP in inches

(59a) g_2 AUXILIARY AIR GAP in inches

(60) C_X REDUCTION FACTOR - Used in calculating conductor permeance and is dependent on the pitch and distribution factor. This factor can be obtained from Graph 1 with an assumed K_d of .955 or calculated as shown:

$$C_X = \frac{(K_X)}{(K_p)^2\,(K_d)^2} = \frac{(61)}{(44)^2\,(43)^2}$$

(61) K_X **FACTOR TO ACCOUNT FOR DIFFERENCE** in phase current in coil sides in same slot

For 60° phase belt winding, ie when (42a) = 60

$$K_X = 1/4\left[\frac{3(y)}{(m)(q)} + 1\right] \text{ where } 2/3 \leqq (y)/(m)(q) \leqq 1.0$$

$$K_X = 1/4\left[\frac{3(31)}{(5)(25)} + 1\right] \text{ where } 2/3 \leqq (31a) \leqq 1.0$$

or

$$K_X = 1/4\left[\frac{6(y)}{(m)(q)} - 1\right] \text{ where } 1/2 \leqq (31a) \leqq 2/3$$

$$K_X = 1/4\left[\frac{6(31)}{(5)(25)} - 1\right] \text{ where } 1/2 \leqq (31a) \leqq 2/3$$

For 120° phase belt winding, ie when (42a) = 120

$$K_X = .75 \text{ when } 2/3 \leqq (y)/(m)(q)$$

$$K_X = .75 \text{ when } 2/3 \leqq (31a)$$

or

$$K_X = .05\left[\frac{24(y)}{(m)(q)} - 1\right] \text{ where } 1/2 \leqq \frac{(y)}{(m)(q)} \leqq 2/3$$

$$K_X = .05\left[\frac{24(31)}{(3)(25)} - 1\right] \text{ where } 1/2 \leqq (31a) \leqq 2/3$$

(62) λ_i **CONDUCTOR PERMEANCE** - The specific permeance for the portion of the stator current that is embedded in the iron. This permeance depends upon the configuration of the slot.

(a) For open slots

$$\lambda_i = (C_X)\,\frac{20}{(m)(q)}\left[\frac{(h_2)}{(b_s)} + \frac{(h_1)}{3(b_s)} + \frac{(b_t)^2}{16(\tau_s)(g)} + \frac{.35(b_t)}{(\tau_s)}\right]$$

$$\lambda_i = (60)\frac{20}{(5)(25)}\left[\frac{(22)}{(22)} + \frac{(22)}{3(22)} + \frac{(58)^2}{16(26)(59)} + \frac{.35(58)}{(26)}\right]$$

(b) For partially closed slots with constant slot width

$$\lambda_i = (C_X)\frac{20}{(m)(q)}\left[\frac{(h_o)}{(b_o)} + \frac{2(h_t)}{(b_o)+(b_s)} + \frac{(h_w)}{(b_s)} + \frac{(h_1)}{3(b_s)} + \frac{(b_t)^2}{16(\tau_s)(g)} + \frac{.35(b_t)}{(\tau_s)}\right]$$

$$\lambda_i = (60)\frac{20}{(5)(25)}\left[\frac{(22)}{(22)} + \frac{2(22)}{(22)+(22)} + \frac{(22)}{(22)} + \frac{(22)}{3(22)} + \frac{(58)^2}{16(26)(59)} + \frac{.35(58)}{(26)}\right]$$

(c) For partially closed slots (tapered sides)

$$\lambda_i = (C_X)\frac{20}{(m)(q)}\left[\frac{(h_o)}{(b_o)} + \frac{2(h_t)}{(b_o)+(b_1)} + \frac{2(h_w)}{(b_1)+(b_2)} + \frac{(h_1)}{3(b_2)} + \frac{(b_t)^2}{16(\tau_s)(g)} + \frac{.35(b_t)}{(\tau_s)}\right]$$

$$\lambda_i = (60)\frac{20}{(5)(25)}\left[\frac{(22)}{(22)} + \frac{2(22)}{(22)+(22)} + \frac{2(22)}{(22)+(22)} + \frac{(22)}{3(22)} + \frac{(58)^2}{16(26)(59)} + \frac{.35(58)}{(26)}\right]$$

(d) For round slots

$$\lambda_i = (C_X)\frac{20}{(m)(q)}\left[.62 + \frac{(h_o)}{(b_o)}\right]$$

$$\lambda_i = (60)\frac{20}{(5)(25)}\left[.62 + \frac{(22)}{(22)}\right]$$

(e) For open slots with a winding of one conductor per slot

$$\lambda_i = (C_X)\frac{20}{(m)(q)}\left[\frac{(h_2)}{(b_s)} + \frac{(h_1)}{3(b_s)} + .6 + \frac{(g)}{2(\tau_s)} + \frac{(\tau_s)}{4(g)}\right]$$

$$\lambda_i = (60)\frac{20}{(5)(25)}\left[\frac{(22)}{(22)} + \frac{(22)}{3(22)} + .6 + \frac{(59)}{2(26)} + \frac{(26)}{4(59)}\right]$$

(63) K_E **LEAKAGE REACTIVE FACTOR** for end turn

$$K_E = \frac{\text{Calculated value } (L_E)}{\text{Value } (L_E) \text{ from Graph 1}} \quad \text{(For machines where (11)} > 8'')$$

where L_E = (48) and abscisa of Graph 1 = $(Y)(\tau_s)$ = (31)(26)

$$K_E = \sqrt{\frac{\text{Calculated value of } (L_E)}{\text{Value } (L_E) \text{ from Graph 1}}} \quad \text{(For machines where (11)} < 8'')$$

(64) λ_E **END WINDING PERMEANCE** - The specific permeance for the end extension portion of the stator winding

$$\lambda_E = \frac{6.28(K_E)}{(\ell)(K_d)^2}\left[\frac{\phi_E L_E}{2n}\right] = \frac{6.28(63)}{(13)(43)^2}\left[\frac{Q_E L_E}{2n}\right]$$

The term $\left[\frac{\phi_E L_E}{2n}\right]$ is obtained from Graph 1.

The symbols used in this (term) do not apply to those of this design manual. Reference information for the symbol origin is included on Graph 1.

(65) -- **WEIGHT OF COPPER** - The weight of stator copper in lbs.

#'s copper = $.321(n_s)(Q)(a_c)(\ell_t)$ = .321(30)(23)(46)(49)

NOTE: This answer is given in lbs. based on the density of copper. If any other material is used, the answer on output sheet can be converted by the designer by multiplying by the ratio of densities.

(66) -- **WEIGHT OF STATOR IRON** - in lbs.

$$\#\text{'s iron} = .283\left\{(b_{tm})(Q)(\ell_s)(h_s) + \pi\left[(D) - (h_c)\right](h_c)(\ell_s)\right\}$$

$$.283\left\{(57)(23)(17)(22) + \pi\left[(12) - (24)\right](24)(17)\right\}$$

(67) K_s **CARTER COEFFICIENT**

$$K_s = \frac{(\tau_s)\left[5(g) + (b_s)\right]}{(\tau_s)\left[5(g) + (b_s)\right] - (b_s)^2} \quad \text{(For open slots)}$$

$$K_s = \frac{(26)\left[5(59) + (22)\right]}{(26)\left[5(59) + (22)\right] - (22)^2}$$

$$K_s = \frac{\tau_s\left[4.44(g) + .75(b_o)\right]}{\tau_s\left[4.44(g) + .75(b_o)\right] - (b_o)^2} \quad \text{(For partially closed slots)}$$

$$K_s = \frac{(26)\left[4.44(59) + .75(22)\right]}{(26)\left[4.44(59) + .75(22)\right] - (22)^2}$$

(68) -- **MAIN AIR GAP AREA** - The area of the gap surface at the stator bore

$$\text{Gap Area} = \pi(d)(\ell) = \pi(11)(13)$$

(69) g_e **EFFECTIVE AIR GAP (MAIN)**

$$g_e = (K_s)(g) = (67)(59)$$

(70) A_{g2} **AREA OF AUXILIARY AIR GAP**

$$A_{g2} = \pi(d_{g2})(\ell_{g2}) = \pi(87)(87)$$

(71)	C_1	THE RATIO OF MAXIMUM FUNDAMENTAL of the field form to the actual maximum of the field form - This term can be an input or output. For C_1 to be output insert 0. on input sheet. For C_1 to be input, determine C_1 as follows: For pole heads with only one radius, C_1 is obtained from Curve #4. The abscissa is "pole embrace" (α) = (77). The graphical flux plotting method of determining C_1 is explained in the section titled "Derivations" in the Appendix.
(72)	C_W	WINDING CONSTANT- The ratio of the RMS line voltage for a full pitched winding to that which would be introduced in all the conductors in series if the density were uniform and equal to the maximum value. This value can be an input or output. For C_W to be an output, insert 0. on input sheet. For C_W to be an input, calculate as follows: $C_W = \frac{(E)(C_1)(K_d)}{\sqrt{2}(E_{PH})(m)} = \frac{(3)(71)(43)}{\sqrt{2}\,(4)(5)}$ Assuming K_d = .955, then C_W = .225 C_1 for three phase delta machines and C_W = .390 C_1 for three phase star machines.

(73) C_P

POLE CONSTANT - The ratio of the average to the maximum value of the field form. This ratio can be an input or output. For C_P to be an output, insert 0. on input sheet. For C_P to be an input, determine as follows:

For pole heads with more than one radius C_P is calculated from the same field form that was used to determine C_1, and this method is described in the section titled "Derivations" in the Appendix. For pole heads with only one radius C_P is obtained from Curve #4. Note the correction factor at the top of the curve.

(74) C_M

DEMAGNETIZING FACTOR - direct axis - This factor can be an input or output. For C_M to be an output, insert 0. on input sheet. For C_M to be an input, determine as follows:

$$C_M = \frac{(\alpha)\pi + \sin[(\alpha)\pi]}{4 \sin[(\alpha)\ \pi/2]} = \frac{(77)\pi + \sin[(77)\pi]}{4 \sin[(77)\ \pi/2]}$$

C_M can also be obtained from Curve 9.

(75) C_q

CROSS MAGNETIZING FACTOR - quadrature axis - This factor can be an input or output. For C_q to be an output, insert 0. on input sheet. For C_q to be an input, determine as follows:

$$C_q = \frac{1/2 \cos\left[(\alpha)\ \pi/2\right] + (\alpha)\pi - \sin\left[(\alpha)\pi\right]}{4 \sin\left[(\alpha)\ \pi/2\right]}$$

$$= \frac{1/2 \cos\left[(77)\ \pi/2\right] + (77)\pi - \sin\left[(77)\pi\right]}{4 \sin\left[(77)\ \pi/2\right]}$$

valid for concentric poles.

C_q can also be obtained from Curve 9.

(76) --

POLE DIMENSION LOCATIONS

b_{p2} = width of pole at edge of stator stack

b_{p1} = pole width at terminus

t_{p2} = thickness of pole at edge of stator

t_{p1} = thickness of pole at terminus

ℓ_p = length of pole

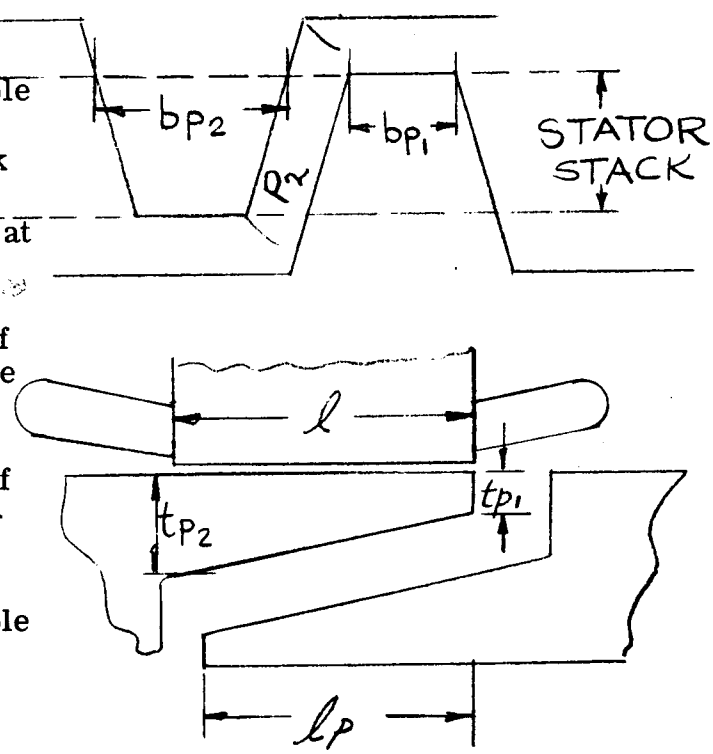

Figure 2

(77) POLE EMBRACE

$$\alpha = \frac{b_{p1} + b_{p2}}{2(\tau_p)} = \frac{(76) + (76)}{2(41)}$$

(77a) -- The next 13 items deal with the calculation of rotor and stator leakage permeance. A number of illustrations are included to help identify and locate the actual path. This computer program is set up to handle permeance P_1, P_2, P_3 and P_4 in the following two ways:

1. P_1 through P_4 can be calculated by the computer. For this case insert 0.0 on the input sheet for P_1 through P_4.

2. P_1 through P_4 can be calculated by the designer. For this case insert the actual calculated value on the input sheet for P_1 through P_4.

Permeance P_5 and P_7 must be calculated by the designer and the calculated value must be inserted on the input sheet. This computer program is not set up for the computer to calculate these two permeance values.

Permeance calculations P_1 through P_7 are all based on the equation $P = \frac{\mu\,(\text{area})}{\ell}$

Where μ = 3.19

Area = Cross-sectional area perpendicular to

ℓ = length of permeance leakage path

Many of the equations used in this section are taken from Roter's "Electromagnetic Devices." Refer to the supplement at the end of this computer design manual for an explanation of each condition.

(78) -- ROTOR AND STATOR DIMENSIONS

ℓ_{g2} = axial length of gap (g2)

d_{y2} = diameter of yoke (end bell section) at narrowest section

d_{g2} = rotor diameter at auxiliary air gap

ℓ_y = effective length of yoke

t_{y2} = thickness of end bell section of yoke

t_y = thickness of housing section of yoke

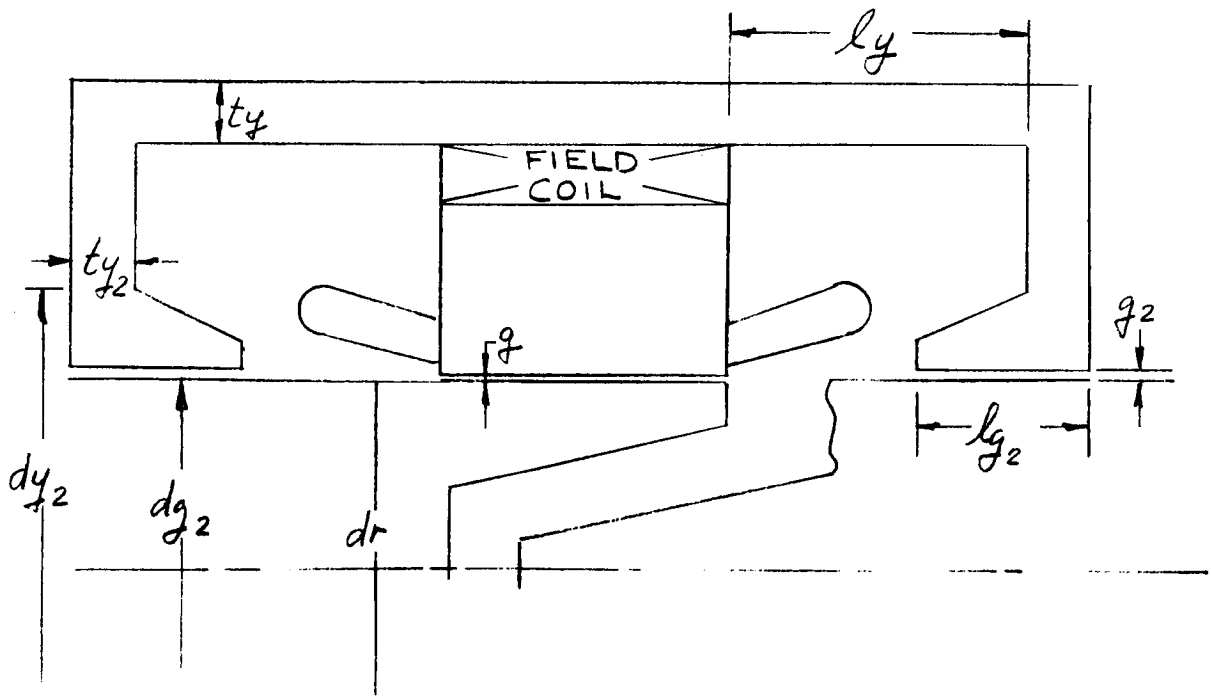

FIGURE 3

(79) a_p — POLE AREA - The effective cross sectional area of the pole

$$a_p = (b_{p2})(t_{p2}) = (76)(76)$$

(80) P_1 — POLE HEAD END LEAKAGE - This can be either 0.0 or the actual value if available. Refer to Item (86) for explanation. See Figure 4 for location.

$$P_1 = \frac{3.19\ (b_{p1})(t_{p1})}{\ell_1} = \frac{3.19\ (76)(76)}{(80a)}$$

(80a) ℓ_1 — ℓ_1 = length of permeance path P_1 and must be obtained from design layout.

(81) P_2 — POLE HEAD SIDE LEAKAGE - This input can be either 0.0 or the actual value if available. Refer to Item (86) for explanation. See Figure 2 for location.

$$P_2 = \frac{3.19\left\{(\ell_p)\left[\frac{(t_{p2}) + (t_{p1})}{2}\right]\right\}}{2} = \frac{3.19\left\{(76)\left[\frac{(76) + (76)}{2}\right]\right\}}{(81a)}$$

(81a) ℓ_2 — ℓ_2 is the length of permeance path P_2 and must be obtained from design layout.

$$\ell_2 = \tau_p - \left[\frac{(b_{p1}) + (b_{p2})}{2}\right] = (41) - \left[\frac{(76) + (76)}{2}\right]$$

(82) P_3

POLE BODY END LEAKAGE - This input can be either 0.0 or the actual value if available. Refer to Item (86) for explanation. See Figure 4 for location.

$$* \; P_3 = \frac{6.28}{\pi}\left[3\,\frac{(b_{p1}) + (b_{p2})}{4}\right]\ell_n\,\frac{(r_3)}{(r_4)}$$

$$= \frac{6.28}{\pi}\left[3\,\frac{(76) + (76)}{4}\right]\ell_n\,\frac{(82a)}{(82b)}$$

* The formula for P_3 is taken from the supplement at the end of this computer design manual.

(82a) r_3

$r_3 = \ell_1 = (80a)$ = length of permeance path P_1

(82b) r_4

$r_4 = (\ell_1) - \frac{(\ell)}{2} = (80a) - \frac{(13)}{2}$

(83) P_4

POLE BODY SIDE LEAKAGE - This input can be either 0.0 or the actual value if available. Refer to Item (77a) for explanation. See Figure 4 for location.

When (6) > 4

$$* \; P_4 = \frac{3.19\,(\ell_p)}{\pi}\,\ell_n\left[1 + \frac{(b_{p1}) + (b_{p2})}{Z}\right]$$

$$= \frac{3.19(76)}{\pi}\,\ell_n\left[1 + \frac{(76) + (76)}{83}\right]$$

Where $Z = T_p - \left[\frac{(b_{p1}) + (b_{p2})}{2}\right] = 41 - \left[\frac{(76) + (76)}{2}\right]$

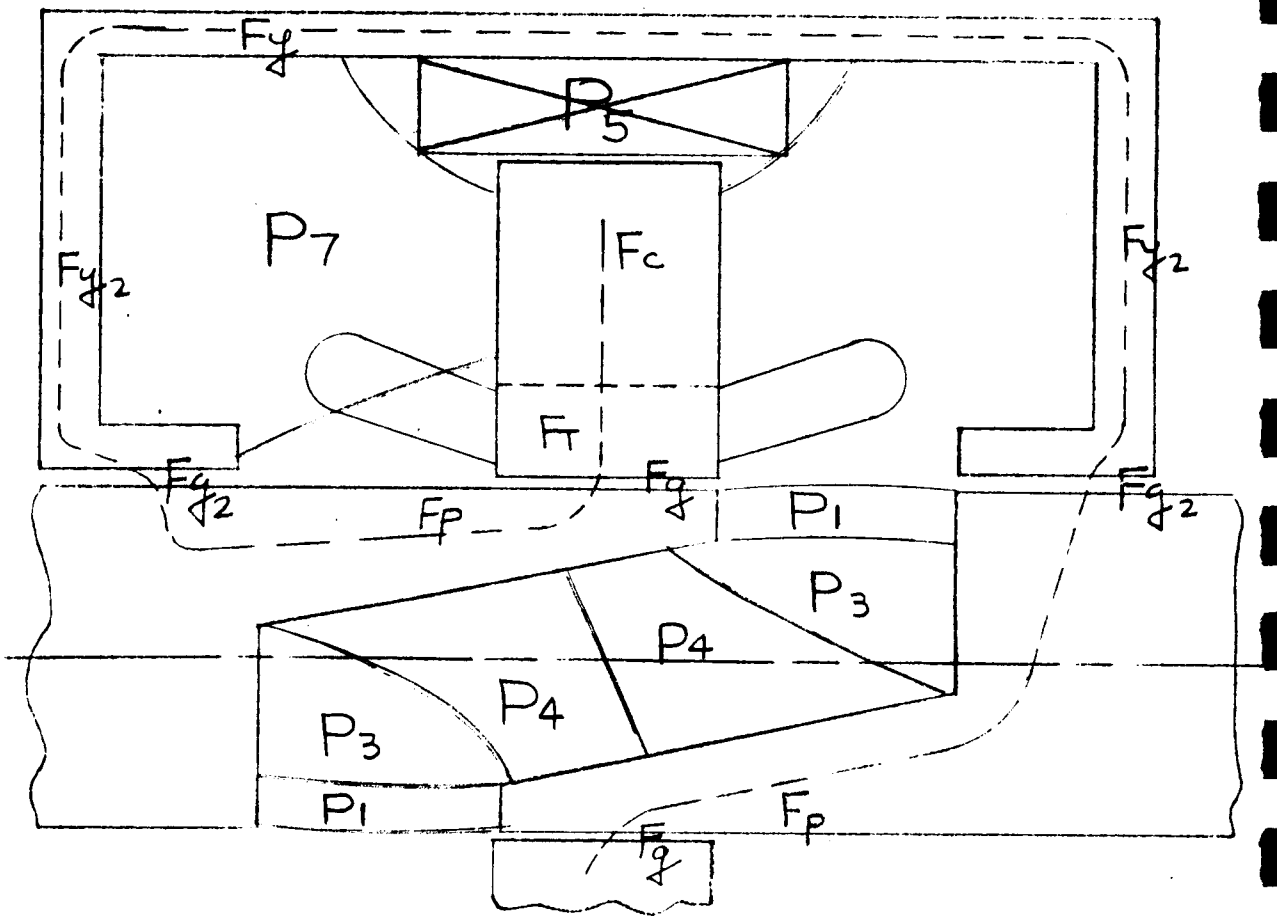
Fy
P5
P7
Fc
Fy2
Fy2
FT
Fg2
Fg
Fg2
Fp
P1
P3
P4
P4
P3
P1
Fp
Fg

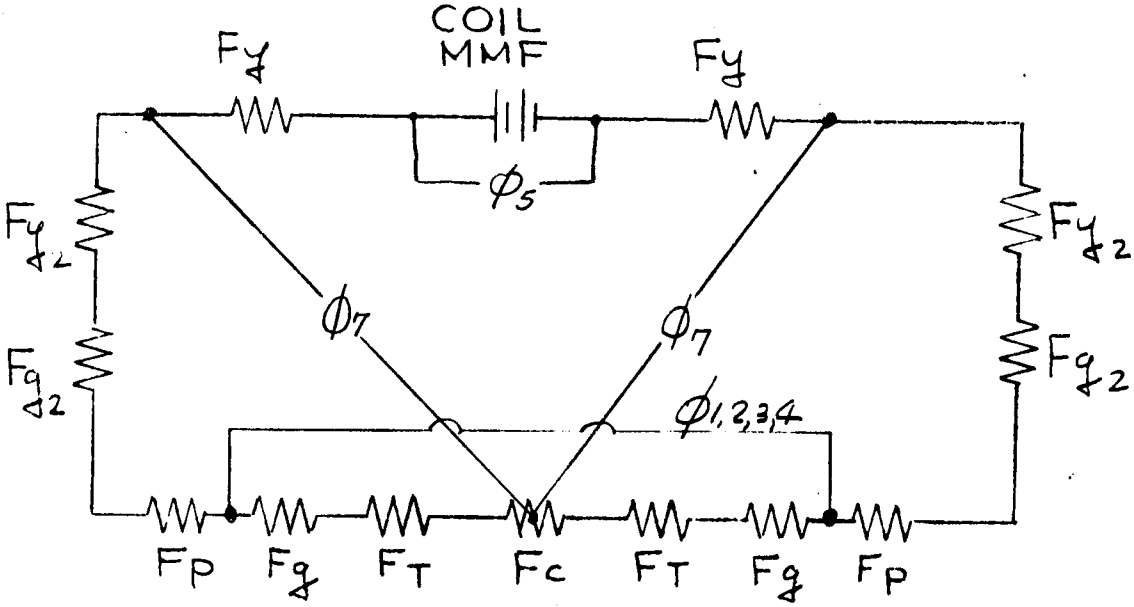
COIL
MMF
Fy
Fy
φ5
Fy2
Fy2
Fg2
Fg2
φ7
φ7
φ1,2,3,4
Fp
Fg
FT
Fc
FT
Fg
Fp

FIGURE 4

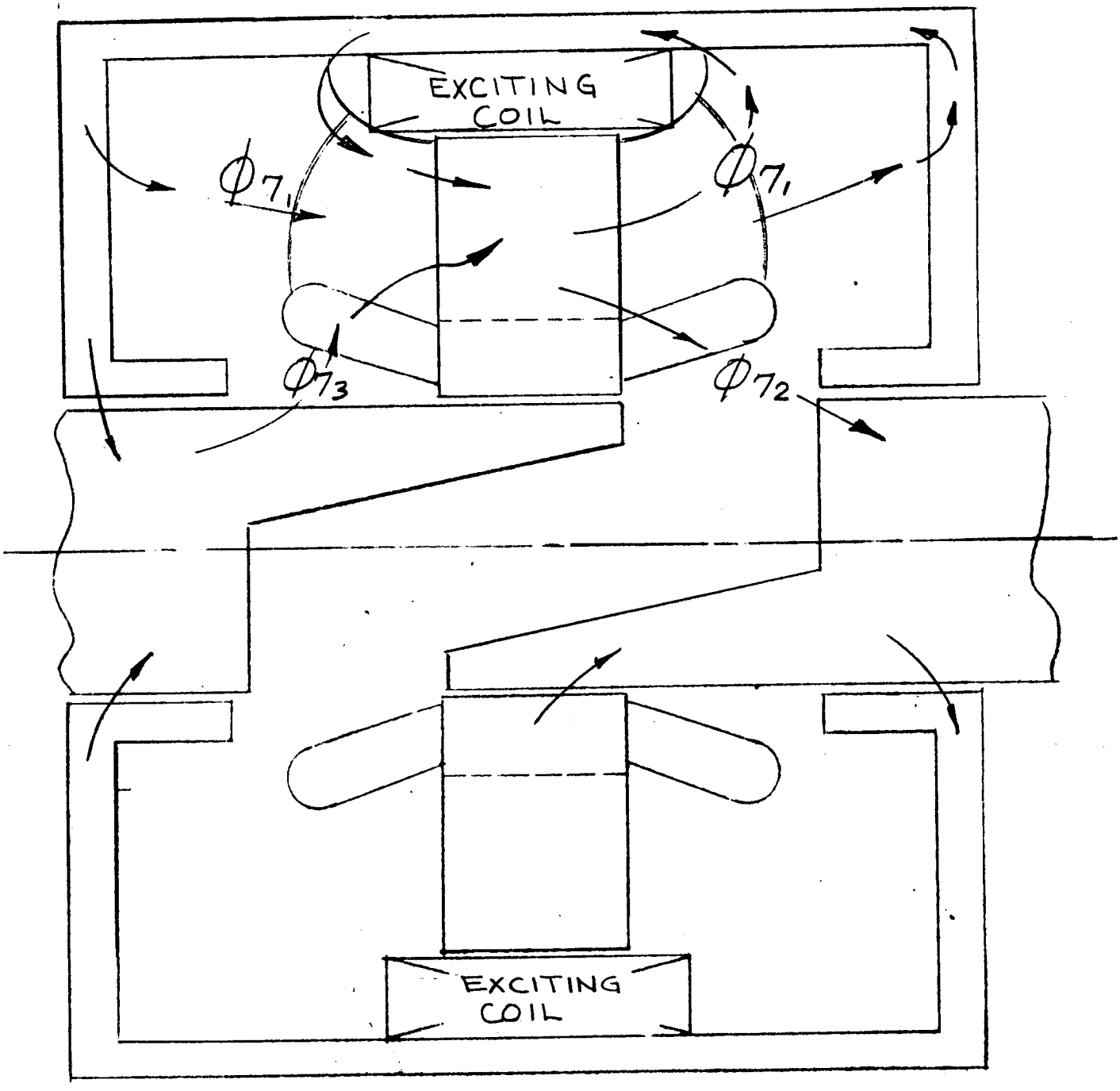

FIGURE 5

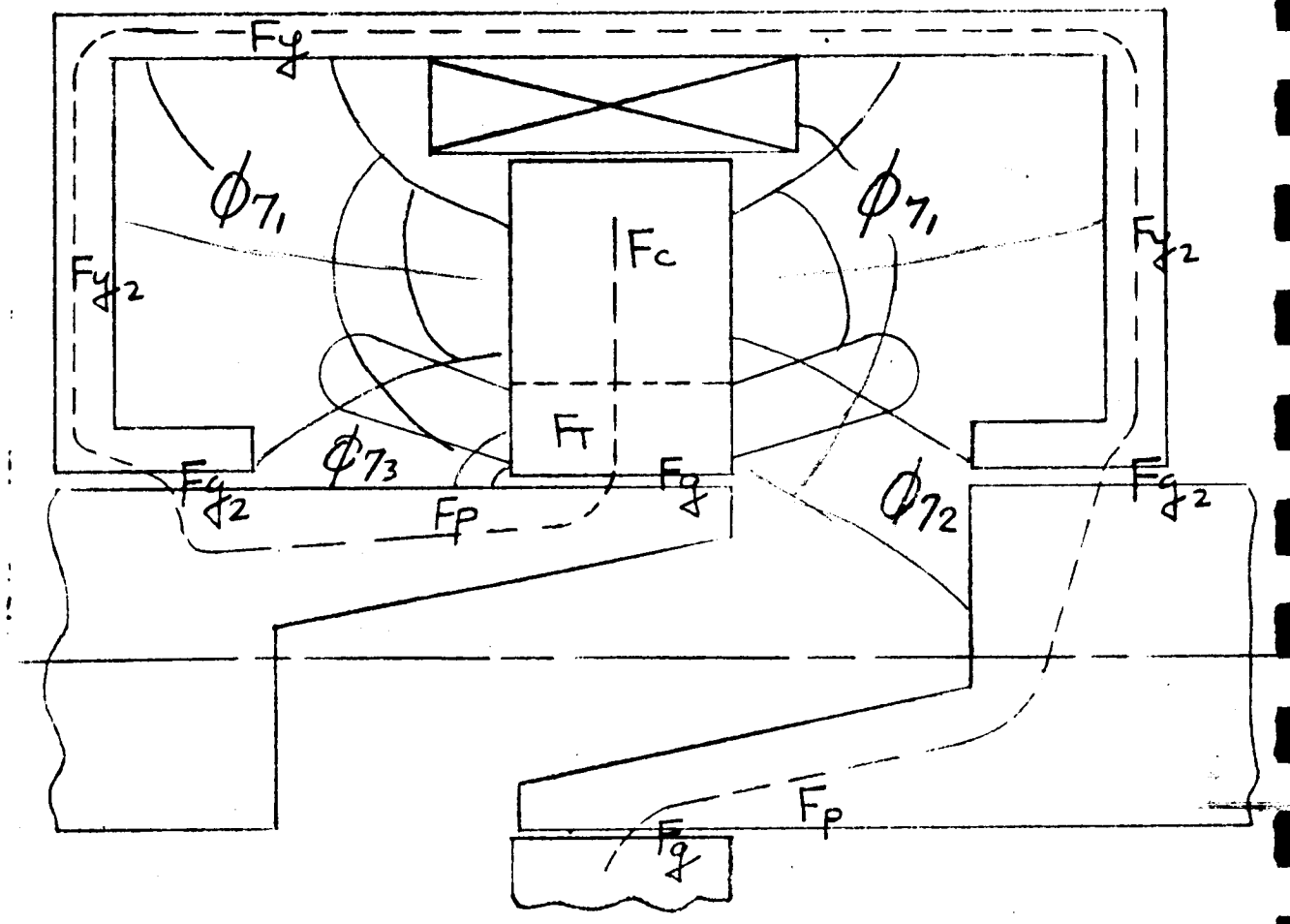
Fy
Fy2
Fc
FT
Fg
Fg2
Fp
Fp
Fg

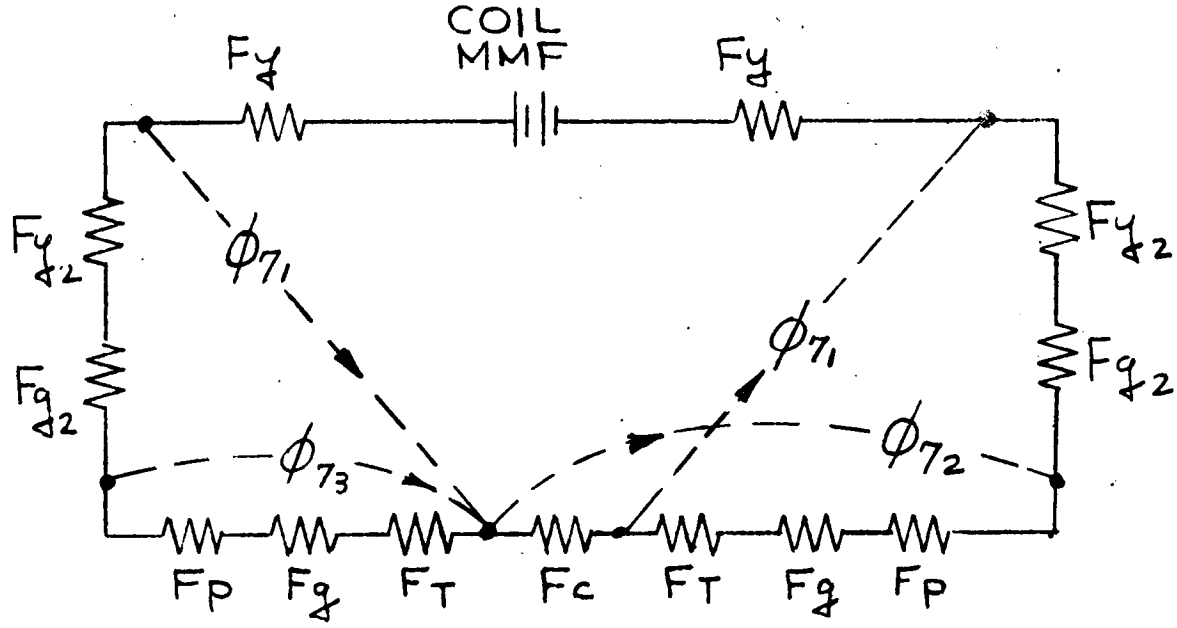
COIL
MMF
Fy
Fy
Fy2
Fg2
Fy2
Fg2
Fp
Fg
FT
Fc
FT
Fg
Fp

FIGURE 6

When (6) 4

$$* \; P_4 = \frac{3.19\,(\ell_p)}{\pi}\,\frac{3}{2}\,\ell_n\left[1 + \frac{(b_{p1}) + (b_{p2})}{Z}\right]$$

$$= \frac{3.19\,(76)}{\pi}\,\frac{3}{2}\,\ell_n\left[1 + \frac{(76) + (76)}{(83)}\right]$$

* The formula for P_4 is taken from the supplement at the end of this computer design manual.

(84) P_5 <u>COIL LEAKAGE PERMEANCE</u> - This permeance must be calculated by the designer and the calculated value must be inserted on the input sheet. Refer to Figure 4 , which shows the location of the coil. Use the supplement attached at the end of this program to find the proper formula.

(86) P_7 <u>STATOR TO FRAME AND ROTOR LEAKAGE PERMEANCE</u> - Refer to Figure 5 & 6 for location. This permeance is actually broken down into three parts: P_{71} leakage to yoke; P_{72} leakage to shaft; P_{73} leakage to rotor pole. In this design manual, the three permeances are added and treated as a single leakage. The same condition applies to P_7 as does P_5. The designer must calculate P_7 and insert the calculated value on the input sheet. Refer to supplement for proper formula.

(87)	--	The next set of calculations deals with the no load saturation. The equations as set up in this section can be used to calculate the complete no load saturation for any voltage. When the no load saturation data is required at various voltages, insert 1. on the input sheet for "no load sat". The computer will then calculate the complete no load saturation curve at 80, 90, 100, 110, 120, 130, 140, 150 and 160% of rated volts. When the complete saturation data is not necessary, insert 0. on the input sheet and the computer will calculate the 100% volts data.
(88)	ϕ_T	TOTAL FLUX IN KILOLINES $\phi_T = \frac{6(E)10^6}{(C_W)(n_e)(RPM)} = \frac{6(3)10^6}{(72)(45)(17)}$
(91)	B_t	TOOTH DENSITY in Kilolines/in^2 - The flux density in the stator tooth at 1/3 of the distance from the minimum section. $B_t = \frac{\phi_T}{(Q)(\ell_s)(b_{t\ 1/3})} = \frac{(88)}{(23)(17)(57a)}$
(92)	ϕ_P	FLUX PER POLE in kilolines $\phi_P = \frac{(\phi_T)(C_P)}{(P)} = \frac{(88)(73)}{(6)}$

(94) B_c CORE DENSITY in Kilolines/in^2 - The flux density in the stator core

$$B_c = \frac{(\phi_P)}{2(h_c)(\ell_s)} = \frac{(92)}{2(24)(17)}$$

(95) B_g GAP DENSITY in Kilolines/in^2 - The maximum flux density in the air gap

$$B_g = \frac{(\phi_T)}{\pi(d)(\ell)} = \frac{(88)}{\pi(11)(13)}$$

(96) F_g AIR GAP AMPERE TURNS - The field ampere turns per pole required to force flux across the air gap when operating at no load with rated voltage.

$$F_g = \frac{(B_g)(g_e)\times 10^3}{3.19} = \frac{(95)(69)\times 10^3}{3.19}$$

(97) F_T STATOR TOOTH AMPERE TURNS

$$F_T = (h_s)\left[\text{NI/in at density}(B_t)\right]$$

$$= (22)\left[\begin{array}{l}\text{Look up on stator magnetization}\\ \text{curve given in (18) @ density (91)}\end{array}\right]$$

(98) F_c STATOR CORE AMPERE TURNS

$$F_c = \left[\frac{\pi[(D) - (h_c)]}{4(P)}\right]\left[\text{NI/in @ density of}(B_c)\right]$$

$$= \left[\frac{\pi[(12) - (24)]}{4(6)}\right]\left[\begin{array}{l}\text{Look up on stator magnetization}\\ \text{curve given in (18) @ density (94)}\end{array}\right]$$

(98a) F_s

STATOR AMPERE TURNS, total

$$F_s = (F_T) + (F_c) = (97) + (98)$$

(99) ϕ_7

STATOR TO YOKE LEAKAGE FLUX - The leakage flux from the stator to the yoke.

$$\phi_7 = \left[(F_c) + (F_T) + (F_g) + (F_p)\right] (P_7) \times 10^{-3}$$

$$= \left[(98) + (97) + (96) + (104)\right] 86) \times 10^{-3}$$

The items to follow are to be calculated for variable loads. The first set of calculations are at no load. These calculations will then be repeated for 100% load. From then on any variation in load would be a repeat of the 100% load calculations with the proper percent load inserted.

(100) ϕ_ℓ

ROTOR LEAKAGE FLUX - at no load

$$\phi_\ell = 2\left[(F_g) + (F_s)\right]\left[(P_1) + (P_2) + (P_3) + (P_4)\right] \times 10^{-3}$$

$$= 2\left[(96) + (98a)\right]\left[(80) + (81) + (82) + (83)\right] \times 10^{-3}$$

(102) ϕ_{PT}

TOTAL FLUX PER POLE - at no load

$$\phi_{PT} = (\phi_P) + \frac{(\phi_\ell)}{(P)} = (92) + \frac{(100)}{(6)}$$

(103)	B_P	<u>POLE DENSITY</u> - The apparent flux density at the base of the pole. Note that no provision is made in this manual for calculating the density in the flux plate. It is, therefore, important to remember not to restrict the flux area through this section. $B_P = \frac{(\phi_{PT})}{(a_P)} = \frac{(102)}{(79)}$
(104)	F_P	<u>POLE AMPERE TURNS</u> - at no load. The ampere turns per pole required to force the flux through the pole and spider at no load rated voltage. The no load pole ampere turns per pole are calculated as the product of (ℓ_P) times the NI per inch at the density (B_P). Use magnetization curve submitted per item (18) for rotor. $F_P = (\ell_P) \left[\text{NI/in @ density } (B_P) \right]$ $= (76) \left[\text{Look up on rotor magnetization curve given in (18) @ density (103)} \right]$
(108)	ϕ_{g2}	<u>AUXILIARY GAP</u> (g_2) flux in kilolines. $\phi_{g2} = \phi_{PT} \frac{(P)}{2} + \phi_7 = (102)\frac{(6)}{2} + (99)$

(118) ϕ_5

LEAKAGE FLUX THROUGH COIL

$$\phi_5 = 2(P_5)\left[(F_{g2}) + (F_{y2}) + (F_P) + (F_g) + (F_T) + (F_C)\right] \times 10^{-3}$$

$$\phi_5 = 2(84)\left[(123) + (126) + (104) + (96) + (97) + (98)\right] \times 10^{-3}$$

(122) B_{g2}

AUXILIARY GAP (g_2) FLUX DENSITY

$$B_{g2} = \frac{(\phi_{g2})}{(A_{g2})} = \frac{(108)}{(70)}$$

(123) F_{g2}

AUXILIARY AIR GAP AMPERE TURNS

$$F_{g2} = \frac{(B_{g2})}{3.19}(g_2) \times 10^3 = \frac{(122)}{3.19}(59a) \times 10^3$$

(124) A_{y2}

AREA OF END BELL SECTION OF YOKE AT SMALLEST SECTION

$$A_{y2} = \pi(d_{y2})(t_{y2}) = \pi(78)(78)$$

(124a) A_y

AREA OF HOUSING PORTION OF YOKE

$$A_y = \pi\left[(D) + (t_y)\right](t_y)$$

$$= \pi\left[(12) + (78)\right](78)$$

(125) B_{y2}

FLUX DENSITY IN END BELL SECTION OF YOKE @ N. L.

NOTE: The flux in the yoke is equal to the flux crossing the auxiliary gap (g).

$$B_{y2} = \frac{(\phi_{g2})}{(A_{y2})} = \frac{(108)}{(124)}$$

(126) F_{y2} AMPERE TURN DROP IN END BELL SECTION OF YOKE @ N. L.

$$F_{y2} = \left[\frac{(D)-(d_{y2})}{6}\right]\left[\text{NI/inch @ } (B_{y2})\right]$$

$$= \left[\frac{(12)-(78)}{6}\right]\left[\text{Look up on yoke magnetization curve @ density (125)}\right]$$

(126a) B_y DENSITY IN HOUSING SECTION OF YOKE @ N. L.

$$B_y = \frac{(\phi_{g2}) + (\phi_5)}{A_y} = \frac{(108)+(118)}{(124a)}$$

(126b) F_y AMPERE TURN DROP IN HOUSING SECTION OF YOKE

$$F_y = (\ell_y)\left[\text{NI/inch at density } (B_y)\right]$$

$$= (78)\left[\text{Look up on yoke magnetization curve @ density (126a)}\right]$$

(127) F_{NL} TOTAL AMPERE TURN DROP AROUND CIRCUIT @ N. L.

$$F_{NL} = 2\left[(F_y)+(F_{y2})+(F_{g2})+(F_P)+(F_g)+(F_T)+(F_c)\right]$$

$$= 2\left[(126b)+(126)+(123)+(104)+(96)+(97)+(98)\right]$$

(127a) I_{FNL} FIELD CURRENT - at no load

$$I_{FNL} = (F_{NL})/(N_F) = (127)/(146)$$

(127b)	E_F	FIELD VOLTS - at no load. This calculation is made with cold field resistance at 20°C for no load condition. $E_F = (I_{FNL})(R_{f\ cold}) = (127a)(154)$
(127c)	S_F	CURRENT DENSITY - at no load. Amperes per square inch of field conductor. $S_F = (I_{FNL})/(a_{cf}) = (127)/(153)$
(128)	A	AMPERE CONDUCTORS per inch - The effective ampere conductors per inch of stator periphery. This factor indicates the "specific loading" of the machine. Its value will increase with the rating and size of the machine and also will increase with the number of poles. It will decrease with increases in voltage or frequency. A is generally higher in single phase machines than in polyphase ones. $A = \frac{(I_{PH})(n_s)(K_P)}{(C)(\tau_s)} = \frac{(8)(30)(44)}{(32)(26)}$
(129)	X	REACTANCE FACTOR - The reactance factor is the quantity by which the specific permeance must be multiplied to give percent reactance. It is the percent reactance for unit specific permeance

or the percent of normal voltage induced by a fundamental flux per pole per inch numerically equal to the fundamental armature ampere turns at rated current. Specific permeance is defined as the average flux per pole per inch of core length produced by unit ampere turns per pole.

$$X = \frac{100(A)(K_d)}{\sqrt{2}\,(C_1)(B_g) \times 10^3} = \frac{100(128)(43)}{\sqrt{2}\,(71)(95) \times 10^3}$$

(130) X_ℓ LEAKAGE REACTANCE - The leakage reactance of the stator for steady state conditions. When (5) = 3, calculate as follows:

$$X_\ell = X\left[(\lambda_i) + (\lambda_E)\right] = (129)\left[(62) + (64)\right]$$

In the case of two phase machines a component due to belt leakage must be included in the stator leakage reactance. This component is due to the harmonics caused by the concentration of the MMF into a small number of phase belts per pole and is negligible for three phase machines. When (5) = 2, calculate as follows:

$$\lambda_B = \frac{0.1(d)}{(P)(g_e)}\left[\frac{\sin\left[\frac{3(y)}{(m)(q)}\right]90^\circ}{(K_p)}\right] = \frac{0.1(11)}{(6)(69)}\left[\frac{\sin\left[\frac{3(31)}{(5)(25)}\right]90^\circ}{(44)}\right]$$

$X_\ell = X\left[(\lambda_i) + (\lambda_E) + (\lambda_B)\right]$ where $\lambda_B = 0$ for 3 phase machines.

$$X_\ell = (79)\left[(62) +)64) + (130)\right]$$

(131) X_{ad} <u>REACTANCE</u> - direct axis - This is the fictitious reactance due to armature reaction in the ~~direct~~ axis.

$$X_{ad} = \frac{.9(N_e)(I_{PH})(C_m)(K_d)}{2P[(F_g) + (F_{g2})]} = \frac{.9\ (45)(8)(74)(43)}{2(6)[(96) + (123)]}$$

(132) X_{aq} <u>REACTANCE</u> - quadrature axis - This is the fictitious reactance due to armature reaction in the quadrature axis.

$$X_{aq} = \frac{(C_q)(X_{ad})}{(C_m)(C_i)} = \frac{(71)(131)}{(74)(75)}$$

(133) X_d <u>SYNCHRONOUS REACTANCE</u> - direct axis - The steady state short circuit reactance in the direct axis.

$$X_d = (X_\ell) + (X_{ad}) = (130) + (131)$$

(134) X_q <u>SYNCHRONOUS REACTANCE</u> - quadrature axis - The steady state short circuit reactance in the quadrature axis.

$$X_q = (X_\ell) + (X_{aq}) = (130) + (132)$$

(145) V_r <u>PERIPHERAL SPEED</u> - The velocity of the rotor surface in feet per minute.

$$V_r = \frac{\pi(d_r)(RPM)}{12} = \frac{\pi(11a)(7)}{12}$$

(146)	N_F	NUMBER OF FIELD TURNS
(146a)	N_{co}	NUMBER OF FIELD COILS - One basic computer program is used for the single-coil and two-coil Lundell generators. This item is used in the computer program as a code for distinguishing one from the other.
(147)	ℓ_{tF}	MEAN LENGTH OF FIELD TURN
(148)	--	FIELD CONDUCTOR DIA OR WIDTH in inches
(149)	--	FIELD CONDUCTOR THICKNESS in inches - Set this item = 0. for round conductor
(150)	$X_f{}^oC$	FIELD TEMP IN ^oC - Input temp at which full load field loss is to be calculated.
(151)	ρ_f	RESISTIVITY of field conductor @ 20^oC in micro ohm-inches. Refer to table given in Item (51) for conversion factors.
(152)	ρ_f (hot)	RESISTIVITY of field conductor at $X_f{}^oC$ $\rho_f\,(\text{hot}) = \rho_f \left[\frac{(X_f{}^oC) + 234.5}{254.5}\right] = (104)\left[\frac{(150) + 234.5}{254.5}\right]$
(153)	a_{cf}	CONDUCTOR AREA OF FIELD WDG - Calculate same as stator conductor area (46) except substitute (149) for (39) (148) for (33)

(154)	R_f (cold)	<u>COLD FIELD RESISTANCE</u> @ 20^oC R_f (cold) = $(\rho_f) \frac{(N_F)(\ell_{tf})}{(a_{cf})}$ = (151) $\frac{(146)(147)}{(153)}$
(155)	R_f (hot)	<u>HOT FIELD RESISTANCE</u> - Calculated at $X_f{}^oC$(103) R_f (hot) = $(\rho_f \text{ hot}) \frac{(N_F)(\ell_{tf})}{(a_{cf})}$ = (152) $\frac{(146)(147)}{(153)}$
(156)	--	<u>WEIGHT OF FIELD COIL</u> in lbs. #'s of copper = $.321\ (N_F)(\ell_{tf})(a_{cf})$ = .321(146)(6)(147)(153) ALSO REFER TO NOTE IN ITEM (65)
(157)	--	<u>WEIGHT OF ROTOR IRON</u> - Because of the large number of different pole shapes, one standard formula cannot be used for calculating rotor iron weight. Therefore, the computer will not calculate rotor iron weight. The space is allowed on the input sheet for record purposes only. By inserting 0. in the space allowed for rotor iron weight, the computer will show "0." on the output sheet. If the rotor iron weight is available and inserted on input sheet, then the output sheet will show this same weight on the output sheet.

(160) X_F

THE EFFECTIVE FIELD LEAKAGE REACTANCE - The reactance which added to the stator leakage reactance gives the transient reactance X'_{du}.

When unit fundamental armature ampere turns are suddenly applied on the direct axis, an initial field current (I_f) will be induced. The value of this initial field current will be just enough to make the net flux interlinking the field because of the field current and the armature current zero. The field ampere turns will equal the armature ampere turns.

$$X_F = (X)\frac{(P)}{(\ell)}\left[\frac{\left[\frac{(C_1)}{(C_P)}\right]^2 (P_g)^2}{2\pi(P_e)\left[\frac{(g'_e)}{(g_e)}\right]^2}\right] \times 10^{-6}$$

$$X_F = (129)\frac{(6)}{(17)}\left[\frac{\left[\frac{(71)}{(73)}\right]^2 (112)^2}{2\pi(160a)\left[\frac{(160)}{(69)}\right]^2}\right] \times 10^{-6}$$

Where $$P_g = \frac{3.19(\tau_P)(\ell_s)(C_P)}{(g_e)} = \frac{3.19\,(41)(17)(73)}{(69)}$$

Where $$g_e = \left[\frac{2(F_g) + (F_{y2})}{2(F_g)}\right] = 69\left[\frac{2(96) + (123)}{2(96)}\right]$$

(160a)	P_e	FIELD LEAKAGE PERMEANCE $P_e = P_1 + P_2 + P_3 + P_4 + P_5$ $= (80) + (81) + (82) + (83) + (84)$
(161)	L_f	FIELD SELF-INDUCTANCE $L_f = N_c^2 (P_e)$ $= (146)^2 (160a)$
(166)	X'_{du}	UNSATURATED TRANSIENT REACTANCE $X'_{du} = (X_\ell) + (X_f) = (130) + (160)$
(167)	X'_d	SATURATED TRANSIENT REACTANCE $X'_d = .88(X'_{du}) = .88(166)$
(168)	X''_d	SUBTRANSIENT REACTANCE in direct axis $X''_d = (X'_d) = (167)$
(169)	X''_q	SUBTRANSIENT REACTANCE in quadrature axis $X''_q = X_q = (134)$

(170) X_2

NEGATIVE SEQUENCE REACTANCE - The reactance due to the field which rotates at synchronous speed in a direction opposite to that of the rotor.

$$X_2 = .5\left[X''_d + X''_q\right] = .5\left[(168) + (169)\right]$$

(172) X_0

ZERO SEQUENCE REACTANCE - The reactance drop across any one phase (star connected) for unit current in each of the phases. The machine must be star connected for otherwise no zero sequence current can flow and the term then has no significance.

If (28) = 0, Then $X_o = 0$

If (28) $\neq$ 0, Then

$$X_o = X\left\{\frac{(K_{xo})}{(K_{x1})}\left[(\lambda_i) + (\lambda_{Bo})\right] + \frac{1.667\left[(h_1) + 3(h_3)\right]}{(m)(q)(K_P)^2(K_d)^2(b_s)} + .2(\lambda_E)\right\}$$

$$= (79)\left\{\frac{(173)}{(174)}\left[(62) + (123c)\right] + \frac{1.667\left[(22) + 3(22)\right]}{(5)(25)(44)^2(43)^2(22)} + .2(64)\right\}$$

(173) K_{xo}

If (30) = 1, Then $K_{xo} = 1$

If (30) $\neq$ 1, Then $K_{xo} = \frac{3(\gamma)}{(m)(q)} - 2$

$$= \frac{3(31)}{(5)(25)} - 2$$

(174) K_{x1}

If (30) = 1, Then $K_{x1} = 1$

If (30) $\neq$ 1, Then:

$$K_{x1} = \left[\frac{3(\gamma)}{4(m)(q)} + \frac{1}{4}\right] = \left[\frac{3(31)}{4(5)(25)} + \frac{1}{4}\right] \text{ If (31a)} \geq .667$$

$$K_{x1} = \left[\frac{3(\gamma)}{4(m)(q)} - \frac{1}{4}\right] = \left[\frac{3(31)}{4(5)(25)} - \frac{1}{4}\right] \text{ If (31a)} < .667$$

(175) λ_{Bo}

$$\lambda_{Bo} = \frac{(K_{xo})}{(K_p)^2}\left[.07(\lambda_a)\right] = \frac{(173)}{(44)^2}\left[.07(175)\right]$$

Where: $\lambda_a = \frac{6.38(d)}{P(g_e)} = \frac{6.38\ (11)}{(6)(69)}$

(176) T'_{do}

<u>OPEN CIRCUIT TIME CONSTANT</u> - The time constant of the field winding with the stator open circuited and with negligible external resistance and inductance in the field circuit. Field resistance at room temperature (20°C) is used in this calculation.

$$T'_{do} = \frac{L_F}{R_F} = \frac{(161)}{(154)}$$

(177) T_a

<u>ARMATURE TIME CONSTANT</u> - Time constant of the D.C. component. In this calculation stator resistance at room temperature (20°C) is used.

$$T_a = \frac{X_2}{200\pi(f)(r_a)} = \frac{(170)}{200\pi(5a)(177)}$$

Where: $$r_a = \frac{(m)(I_{PH})^2(R_{SPH\ cold})}{\text{Rated KVA}\ \times 10^3} = \frac{(5)(8)^2(53)}{(2)\times 10^3}$$

(178) T'_d <u>TRANSIENT TIME CONSTANT</u> - The time constant of the transient reactance component of the alternating wave.

$$T'_d = \frac{(X'_d)}{(X_d)}\ (T'_{do}) = \frac{(167)}{(133)}\ (176)$$

(180) F_{SC} <u>SHORT CIRCUIT AMPERE TURNS</u> - The field ampere turns required to circulate rated stator current when the stator is short circuited.

$$F_{SC} = (X_d)(F_g) = (133)(96)$$

(181) SCR <u>SHORT CIRCUIT RATIO</u> - The ratio of the field current to produce rated voltage on open circuit to the field current required to produce rated current on short circuit.

Since the voltage regulation depends on the leakage reactance and the armature reaction, it is closely related to the current which the machine produces under short circuit conditions, and therefore is directly related to the SCR.

$$SCR = \frac{F_{NL}}{F_{SC}} = \frac{(127)}{(180)}$$

(182)	I^2R_F	FIELD I^2R - at no load. The copper loss in the field winding is calculated with cold field resistance at 20°C for no load condition. Field $I^2R = (I_{FNL})^2(R_{f\ cold}) = (127a)^2$ (154)
(183)	F&W	FRICTION & WINDAGE LOSS - The best results are obtained by using existing data. For ratioing purposes, the loss can be assumed to vary approximately as the 5/2 power of the rotor diameter and as the 3/2 power of the RPM. When no existing data is available, the following calculation can be used for an approximate answer. Insert 0. when computer is to calculate F&W. Insert actual F&W when available. Use same value for all load conditions. $F\&W = 2.52 \times 10^{-6} (d_r)^{2.5} (RPM)^{1.5} (\ell_\rho)$ $= 2.52 \times 10^{-6} (11a)^{2.5} (7)^{1.5}$ (76)
(184)	W_{TNL}	STATOR TEETH LOSS - at no load. The no load loss (W_{TNL}) consists of eddy current and hysteresis losses in the iron. For a given frequency the no load tooth loss will vary as the square of the flux density.

$$W_{TNL} = .453(b_{t\,1/3})(Q)(\ell_s)(h_s)(K_Q)$$

$$= .453(57a)(23)(17)(22)(184)$$

$$\text{Where } K_Q = (k)\left[\frac{(B_t)}{(B)}\right]^2 = (19)\left[\frac{(91)}{(20)}\right]^2$$

(185) W_c <u>STATOR CORE LOSS</u> - The stator core losses are due to eddy currents and hysteresis and do not change under load conditions. For a given frequency the core loss will vary as the square of the flux density (B_c).

$$W_c = 1.42\left[(D) - (h_c)\right](h_c)(\ell_s)(K_{Q1})$$

$$= 1.42\left[(12) - (24)\right](24)(17)(185)$$

$$\text{Where } K_{Q_1} = (k)\left[\frac{(B_c)}{(B)}\right]^2 = (19)\left[\frac{(94)}{(20)}\right]^2$$

(186) W_{NPL} <u>POLE FACE LOSS</u> - at no load. The pole surface losses are due to slot ripple caused by the stator slots. They depend upon the width of the stator slot opening, the air gap, and the stator slot ripple frequency. The no load pole face loss (W_{PNL}) can be obtained from Graph 2. Graph 2 is plotted on the bases of open slots. In order to apply this curve to partially open slots, substitute b_o for b_s. For a better understanding of Graph 2, use the following sample.

K_1 as given on Graph 2 is derived empirically and depends on lamination material and thickness. Those values given on Graph 2 have been used with success. K_1 is an input and must be specified. See item (187) for values of K_1.

(186)	(Cont.)	K_2 is shown as being plotted as a function of $(B_G)^{2.5}$. Also note that upper scale is to be used. Another note in the lower right hand corner of graph indicates that for a solid line (____), the factor is read from the left scale, and for a broken or dashed line (__ - __ -), the right scale should be read. For example, find K_2 when B_G = 30 kilo lines. First locate 30 on upper scale. Read down to the intersection of solid line plot of $K_2 = f(B_G)^{2.5}$. At this intersection read the left scale for K_2. K_2 = .28. Also refer to item (188) for K_2 calculations. K_3 is shown as a solid line plot as a function of $(F_{SLT})^{1.65}$. The note on this plot indicates that the upper scale X 10 should be used. Note F_{SLT} = slot frequency. For an example, find K_3 when F_{SLT} = 1000. Use upper scale X 10 to locate 1000. Read down to intersection of solid line plot of $K_3 = f(F_{SLT})^{1.65}$. At this intersection read the left scale for K_3. K_3 = 1.35. Also refer to item (189) for K_3 calculations. For K_4 use same procedure as outlined above except use lower scale. Do not confuse the dashed line in this plot with the note to use the right scale. The note does not apply in this case. Read left scale. Also refer to item (190) for K_4 calculations. For K_5 use bottom scale and substitute b_o for b_s when using partially closed slot. Read left scale when using solid plot. Use right scale when using dashed plot. Also refer to item (191) for K_5 calculations.

(186) (cont)

For K_6 use the scale attached for C_1 and read K_6 from left scale. Also refer to item (192) for K_6 calculations.

The above factors (K_2), (K_3), (K_4), (K_5), (K_6) can also be calculated as shown in (188), (189), (190), (191), (192) respectively.

$$W_{PNL} = \pi(d)(\ell)(K_1)(K_2)(K_3)(K_4)(K_5)(K_6)$$
$$= \pi(11)(13)(187)(188)(189)(190)(199)(192)$$

(187) K_1

K_1 is derived empirically and depends on lamination material and thickness. The values used successfully for K_1 are shown on Graph 2. They are

K_1 = 1.17 for .028 lam thickness, low carbon steel
= 1.75 for .063 lam thickness, low carbon steel
= 3.5 for .125 lam thickness, low carbon steel
= 7.0 for solid core

K_1 is an input and must be specified on input sheet.

(188) K_2

K_2 can be obtained from Graph 2 (see item 186) for explanation of Graph 2) or it can be calculated as follows:

$$K_2 = f(B_G) = 6.1 \times 10^{-5} (B_G)^{2.5}$$
$$= 6.1 \times 10^{-5} (95)^{2.5}$$

(189) K_3

K_3 can be obtained from Graph 2 (see item 186) for explanation of Graph 2) or it can be calculated as follows:

$$K_3 = f(F_{SLT}) = 1.5147 \times 10^{-5} (F_{SLT})^{1.65}$$
$$= 1.5147 \times 10^{-5} (189)^{1.65}$$

Where $F_{SLT} = \frac{(RPM)}{60} (Q)$

$$= \frac{(7)}{60} (23)$$

(190) K_4

K_4 can be obtained from Graph 2 (see item (186) for explanation of Graph 2) or it can be calculated as follows:

For $\tau_s \leqq .9$

$$K_4 = f(\tau_s) = .81(\tau_s)^{1.285}$$

$$= .81(26)^{1.285}$$

For $.9 \leqq \tau_s \leqq 2.0$

$$K_4 = f(\tau_s) = .79(\tau_s)^{1.145}$$

$$= .79(26)^{1.145}$$

For $\tau_s > 2.0$

$$K_4 = f(\tau_s) = .92(\tau_s)^{.79}$$

$$= .92(26)^{.79}$$

(191) K_5

K_5 can be obtained from Graph 2 (see item (186) for explanation of Graph 2) or it can be calculated as follows:

For $(b_s)/(g) \leqq 1.7$

$$K_5 = f(b_s/g) = .3\left[(b_s)/(g)\right]^{2.31}$$

$$= .3\left[(22)/(59)\right]^{2.31}$$

NOTE: For partially open slots substitute b_o for b_s in equations shown.

For $1.7 < (b_s)/(g) \leqq 3$

$$K_5 = f(b_s)/(g) = .35\left[(b_s)/(g)\right]^{2}$$

$$= .35\left[(22)/(59)\right]^{2}$$

For $3 < (b_s)/(g) \leqq 5$

$$K_5 = f(b_s)/(g) = .625\left[(b_s)/(g)\right]^{1.4}$$

$$= .625\left[(22)/(59)\right]^{1.4}$$

For $(b_s)/(g) > 5$

$$K_5 = f\left[(b_s)\right]/(g) = 1.38\left[(b_s)/(g)\right]^{.965}$$

$$= 1.38\left[(22)/(59)\right]^{.965}$$

(192)	K_6	K_6 can be obtained from Graph 2 (see Item (186) for explanation of Graph 2) or it can be calculated as follows: $K_6 = f(C_1) = 10\left[.9323(C_1) - 1.60596\right]$ $= 10\left[.9323(71) - 1.60596\right]$
(194)	I^2R	<u>STATOR I^2R</u> - at no load. This item = 0. Refer to Item (245) for 100% load stator I^2R.
(195)	--	<u>EDDY LOSS</u> - at no load. This item = 0. Refer to Item (246) for 100% load eddy loss.
(196)	--	<u>TOTAL LOSSES</u> - at no load. Sum of all losses Total losses = (Field I^2R) + (F&W) + (Stator Teeth Loss) (Stator Core Loss) + (Pole Face Loss) = (182) + (183) + (184) + (185) + (186)

NOTE: The output sheet shows the next items to be: (Rating), (Rating + Losses), (% Losses), (% Efficiency). These items do not apply to the no load calculation since the rating is zero. Refer to items (175), (176), (177), (178) for these calculations under load.

The N. L. calculations should all be repeated now for 100% load.

(196a) $\phi_{\ell\ell}$ <u>LEAKAGE FLUX PER POLE</u> at 100% load

$$\phi_{\ell\ell} = \phi_{\ell}\left\{\frac{(e_d)(F_g) + \left[1 + \cos(\theta)\right](F_T) + (F_C)}{(F_g) + (F_T) + (F_C)}\right\}$$

$$= (100)\left\{\frac{(198)(96) + \left[1 + \cos(198a)\right](97) + (98)}{(96) + (97) + (98)}\right.$$

(198) e_d Where $e_d = \cos\epsilon + (X_d)\sin\psi$

$$= \cos(198a) + (83)\sin(198b)$$

(198a) θ Where $\theta = \cos^{-1}\left[(\text{Power Factor})\right]$

$$= \cos^{-1}\left[(9)\right]$$

Where $\psi = \tan^{-1}\left[\frac{\sin(\theta) + (X_q)/(100)}{\cos(\theta)}\right]$

$$= \tan^{-1}\left[\frac{\sin(198a) + (134)/(100)}{\cos(198a)}\right]$$

Where $\epsilon = \psi - \theta = (198a) - (198a)$

(207) ϕ_{7L} <u>FLUX LEAKAGE FROM STATOR TO YOKE UNDER LOAD</u>

(one side of stator only)

$$\phi_{7L} = (P_7)\left[(F_{PL})+(e_d)(F_g)+(F_T)\left[1+\cos(\theta)\right]+(F_c)\right]\times 10^{-3}$$

$$= (86)\left[(213c)+(198)(96)+(97)\left[1+\cos(198a)\right]+(98)\right]\times 10^{-3}$$

(213) ϕ_{PL} <u>FLUX PER POLE</u> at 100% load

For P. F. .0 to .95

$$\phi_{PL} = (\phi_P)\left[(e_d) - \frac{.93(X_{ad})}{100}\sin(\psi)\right]$$

$$= (92)\left[(198) - \frac{.93(131)}{100}\sin(198a)\right]$$

For P. F. .95 to 1.0

$$\phi_{PL} = (\phi_P)(K_c) = (126)(9a)$$

(213a) ϕ_{PTL} <u>TOTAL FLUX PER POLE</u> at 100% load

$$\phi_{PTL} = \phi_{PL}\,\frac{\phi_{\ell\ell}}{P} = (213) + \frac{(196a)}{(6)}$$

(213b) B_{PL} <u>FLUX DENSITY AT BASE OF POLE</u> at 100% load

$$B_{PL} = \frac{\phi_{PTL}}{a_P} = \frac{(213a)}{(79)}$$

(213c) F_{PL} AMPERE TURNS PER POLE at 100% load

$$F_{PL} = (\ell_p)\left[\text{NI/in @ density } (B_{PL})\right]$$

$$= (76)\left[\text{Look up ampere turns/inch on rotor magnetization curve given in (18) at density (213b)}\right]$$

(221) ϕ_{g2L} FLUX CROSSING THE AUXILIARY AIR GAP under load

$$\phi_{g2L} = (\phi_{PTL})\frac{(P)}{2} + \phi_{7L}$$

$$= (213a)\frac{(6)}{2} + (207)$$

(224) B_{g2L} FLUX DENSITY IN AUXILIARY GAP (g_2) under load

$$B_{g2L} = \frac{(\phi_{g2L})}{(A_{g2})} = \frac{(221)}{(70)}$$

(225) F_{g2L} AUXILIARY AIR GAP AMPERE TURN DROP under load

$$F_{g2L} = \frac{(B_{g2L})}{3.19}(g_2) \times 10^3 = \frac{(224)}{3.19}(59a) \times 10^3$$

(226) ϕ_{5L} COIL LEAKAGE FLUX under load

$$\phi_{5L} = 2(P_5)\left[(F_{y2L})+(F_{g2L})+(F_{PL})+(e_d)(F_g)+(F_T)\left[1+\cos(\theta)\right]+(F_c)\right]$$

$$= 2(97)\left[(229)+(225)+(164)+(198)(96)+(97)\left[1+\cos(198a)\right]+(98)\right]$$

(227) ϕ_{y2L} FLUX IN END-BELL SECTION OF THE YOKE under load

$$\phi_{y2L} = (\phi_{g2L})$$

$$= (221)$$

(228) B_{y2L} DENSITY IN END-BELL SECTION OF YOKE AT THE SMALLEST AREA SECTION under load

$$B_{y2L} = \frac{\phi_{y2L}}{A_{y2}} = \frac{(227)}{(124)}$$

(229) F_{y2L} AMPERE TURN DROP IN END-BELL SECTION OF YOKE under load.

$$F_{y2L} = \left[\frac{(D)-(d_{y2})}{6}\right] \left[\text{NI/inch @ density } (B_{y2L})\right]$$

$$= \left[\frac{(12)-(87)}{6}\right] \left[\begin{array}{l}\text{Look up on yoke magnetization curve} \\ \text{given in (18) at density (228)}\end{array}\right]$$

(229a) ϕ_{yL} FLUX IN HOUSING SECTION OF YOKE under load

$$\phi_{yL} = (\phi_{y2L}) + (\phi_{5L})$$

$$= (227) + (226)$$

(229b) B_{yL} FLUX DENSITY IN THE HOUSING SECTION OF THE YOKE under load.

$$B_{yL} = \frac{\phi_{yL}}{A_y} = \frac{(229a)}{(124a)}$$

(229c) F_{yL} <u>AMPERE TURN DROP THROUGH THE HOUSING SECTION OF THE YOKE</u> under load.

$$F_y = (\ell_y) \left[\text{NI/inch @ density } (B_{yL}) \right]$$

$$= (78) \left[\text{Look up on yoke magnetization curve given in (18) @ density (229b)} \right]$$

(236) F_{FL} <u>TOTAL AMPERE TURN DROP PER COIL</u> at full load

$$= 2\left[(F_{g2L}) + (F_{yL}) + (F_{y2L}) + (F_{PL}) + (e_d)(F_g) + (F_T)\left[1 + \cos(\theta)\right] + F_c\right]$$

$$= 2\left[(225) + (229c) + (229) + (213c) + (198)(96) + (97)\left[1 + \cos(198a)\right] + (98)\right]$$

(237) I_{FFL} <u>FIELD CURRENT</u> under load

$$I_{FFL} = (F_{FL})/(N_F) = (236)/(146)$$

(239) -- <u>CURRENT DENSITY</u> at 100% load

$$\text{Current Density} = (I_{FFL})/(a_{cf}) = (237)/(153)$$

(238) E_{FFL} <u>FIELD VOLTS</u> at 100% load - This calculation is made with hot field resistance at expected temperature at 100% load.

$$\text{Field Volts} = (I_{FFL})(R_{f\ hot}) = (237)(155)$$

(241) I^2R_{FL} FIELD I^2R at 100% load - The copper loss in the field winding is calculated with hot field resistance at expected temperature for 100% load condition.

$$\text{Field } I^2R = (I_{FFL})^2(R_{F\ hot}) = (237)^2(155)$$

(242) W_{TFL} STATOR TEETH LOSS at 100% load - The stator tooth loss under load increases over that of no load because of the parasitic fluxes caused by the ripple due to the rotor damper bar slot openings.

$$W_{TFL} = \left\{2\left[.27(X_d)\frac{(\%\ \text{Load})}{100}\right]^{1.8} + 1\right\}(W_{TNL})$$

NOTE (X_d) is in per unit

$$= \left\{2\left[.27(133)\ 1\right]^{1.8} + 1\right\}(184)$$

(243) W_{PFL} POLE FACE LOSS at 100% load

$$W_{PFL} = \left\{\left[\frac{(K_{sc})(I_{PH})\frac{(\%\ \text{Load})}{100}\ (n_s)}{(C)(F_g)}\right]^2 + 1\right\}(W_{PNL})$$

$$= \left\{\left[\frac{(242)(8)\ 1\ (30)}{(32)(96)}\right]^2 + 1\right\}(186)$$

(K_{sc}) is obtained from Graph 3

(245)	I^2R_L	STATOR I^2R at 100% load - The copper loss based on the D. C. resistance of the winding. Calculate at the maximum expected operating temperature. $I^2R = (m)(I_{PH})^2 (R_{SPH\ hot}) \frac{(\%\ Load)}{100}$ $= (5)(8)^2 (54)\ 1.$
(246)	--	EDDY LOSS - Stator I^2R loss due to skin effect $\text{Eddy Loss} = \left[\frac{(EF\ top) + (EF\ bot)}{2} - 1\right] (\text{Stator } I^2R)$ $= \left[\frac{(55) + (56)}{2} - 1\right] (245)$
(247)	--	TOTAL LOSSES at 100% load - sum of all losses at 100% load Total Losses = (Field I^2R) + (F&W) + (Stator Teeth Loss) + (Stator Core Loss) + (Pole Face Loss) + (Stator I^2R) + (Eddy Loss) $= (241) + (183) + (242) + (185) + (243) + (245) + (246)$
(248)	--	RATING IN KILOWATTS at 100% load $\text{Rating} = 3(E_{PH})(I_{PH})\ (P.F.) \frac{(\%\ Load)}{100} \times 10^{-3}$ $= 3(4)(8)\ (9)(1.) \times 10^{-3}$

(249) -- RATING & ΣLOSSES = (248) + (247) $\times 10^{-3}$

(250) -- % LOSSES = [Σ Losses / (Rating + Σ Losses)] 100

= [(247) $\times 10^{-3}$ / (249)]

(251) -- % EFFICIENCY = 100% - % Losses

= 100% - (250)

These items can be recalculated for any load condition by simply inserting the values that correspond to the % load being calculated. The factor $\frac{(\%\ \text{Load})}{100}$ takes care of (I_{PH}) as it changes with load.

Note that values for F&W (183) and W_C (Stator Core Loss) (185) do not change with load, therefore, they can be calculated only once.

SUPPLEMENT TO DESIGN MANUAL FOR PERMEANCE CALCULATIONS

Permeance (P) is the property of a magnetic circuit, or any part of a circuit, which determines the total flux corresponding to a given mmf as indicated in the expression -

$$\phi = F P = \text{mmf} \times \text{permeance}$$

From "Standard Handbook for Electrical Engineers" A. E. Knowlton. 7th edition, McGraw-Hill, Section 4-310

Magnetic Permeability (μ) is that property of an isotropic medium which determines under specified conditions, the magnitude relation between magnetic induction and magnetizing force in the medium usually expressed -

$$\mu = \frac{B}{H}$$

Same reference section 4-308.

For air $\mu = 3.19 \dfrac{\text{Flux Line/inch}^2}{\text{Ampere Turns/inch}}$

The following formulas are from Roter's "Electromagnetic Devices"

Parallel planes of infinite extent

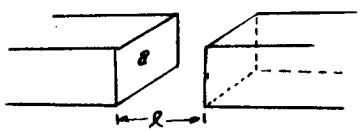

$$P = \mu a/\ell$$

where a = area

ℓ = length of flux path

NON-PARALLEL PLANES OF INFINITE EXTENT

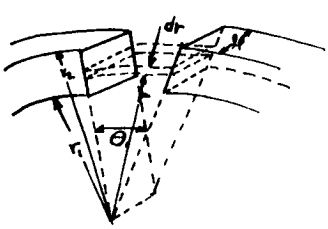

$$dP = \frac{\mu \ell_p \, dr}{\theta r}$$

$$P = \frac{\mu \ell_p}{\theta} \int_{r_1}^{r_2} \frac{dr}{r}$$

$$P = \frac{\mu \ell_p}{\theta} \ln \frac{r_2}{r_1}$$

QUADRANT OF SPHERICAL SHELL

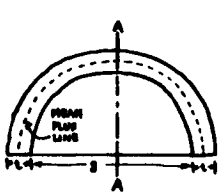

LOCUS OF MEAN FLUX LINES

Mean length of flux path is $\frac{\pi}{2}(t+g)$

Maximum area of flux path is -

$$\frac{\pi\left(\frac{g}{2}+t\right)^2}{4} - \frac{\pi g^2}{16} = \frac{\pi}{4}(t^2 + tg)$$

Average area of path is considered to be -

$$\frac{\pi}{8} t(t+g) \text{ and } P = \frac{\mu a}{\ell} = \frac{\mu \frac{\pi}{8} t(t+g)}{\frac{\pi}{2}(t+g)} = \frac{\mu t}{4}$$

Special formulas for use in estimating permeances of flux paths.

SEMI-CIRCULAR CYLINDRICAL VOLUME

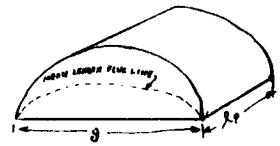

Mean length of flux line has been found by graphical measurement to be 1.22 g.

Mean area of flux path found by dividing the entire volume by mean length of flux path is,

$$\text{Mean area} = \frac{\pi g^2 \ell_p}{8} \times \frac{1}{1.22\,g} = 0.322\, g\, \ell_p$$

$$P = \frac{\mu a}{\ell} = \frac{0.322\, \mu g \ell_p}{1.22\, g} = 0.26\, \mu\, \ell_p$$

HALF ANNULUS

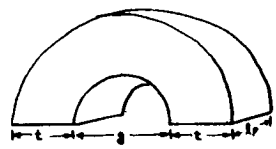

NOTE: IN THE COMPUTER DESIGN MANUAL THE SYMBOL g WAS CHANGED TO z TO AVOID CONFUSION WITH g (AIR GAP)

Assume the mean length of the flux path to be $\pi(\frac{g+t}{2})$ and the average area of the path to be $t\ell_p$ then

$$P = \frac{\mu a}{\ell} = \frac{2\mu t \ell_p}{\pi(g+t)} = 0.64 \frac{\mu \ell_p}{\left(\frac{g}{t}+1\right)}$$

WHEN $g < 3t$ $\quad P = \frac{\mu \ell_p}{\pi} \ln\left(1 + \frac{2t}{g}\right)$

SPHERICAL QUADRANT

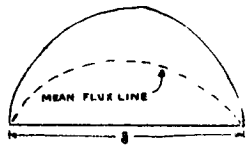

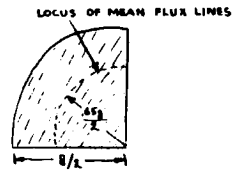

By graphical measurement, the mean flux line is 1.3 g. Volume of quadrant is $1/3\,\pi(\frac{g}{2})^3$, hence mean area of flux path is -

$$\frac{\frac{1}{3}\pi\left(\frac{g}{2}\right)^3}{1.3\,g} = 0.1\, g^2$$

and the permeance is

$$P = \frac{\mu a}{\ell} = \frac{0.1\, g^2 \mu}{1.3\, g} = 0.077\, \mu g$$