NsG-14

25p

RECEIVED
AUG 31 9 10 AM '64
OFFICE OF GRANTS &
RESEARCH CONTRACTS

Revised

OPTIMUM NUCLEAR ROCKET START-UP TO DEVELOP FULL POWER AT EXACT TIME WITH CONSIDERATION OF NOISE

FACILITY FORM 602
N64 33120 (ACCESSION NUMBER)
25 (PAGES)
CR 59209 (NASA CR OR TMX OR AD NUMBER)
(THRU)
1 (CODE)
27 (CATEGORY)

UNPUBLISHED PRELIMINARY

C. N. Shen, Professor of Mechanical Engineering
F. G. Haag, Research Assistant in Mechanical Engineering
Rensselaer Polytechnic Institute, Troy, New York, U.S.A.

OTS PRICE

XEROX $ 1.00 FS
MICROFILM $ 0.50 mf.

Submitted to the Sixth International Instruments and Measurements Conference, Special Section on Automatic Control, Stockholm, Sweden, September 17-18, 1964.

REPORTS CONTROL No. 9

OPTIMUM NUCLEAR ROCKET START-UP TO DEVELOP FULL POWER AT EXACT TIME WITH CONSIDERATION OF NOISE

C. N. Shen, Professor of Mechanical Engineering
F. G. Haag, Research Assistant in Mechanical Engineering
Rensselaer Polytechnic Institute, Troy, New York, U.S.A.

Abstract

33120

A nuclear rocket may be required to reach its full power (over six decades of power) within one minute. An optimum switching of the hydrogen flow and the reactivity from the motion of control rod can be achieved to obtain the full power for a minimum time. However, such a bang-bang system may be subject to inaccuracy in time of switching, if the starting power changes or excessive noise is present. A second optimum principle is applied such that the system will be optimum for the remaining time independent of the past disturbance or starting power. This optimum system with feed-back is less susceptible to tandom noise in the reactor and the instruments than the switching system.

Author

Introduction

Physical processes are complex in nature though man usually identifies them by modeling or similation. The study of these processes is by itself a real task: - processes may be represented by ordinary or partial differential equations of single or multiplied variables. Most of these equations are so complicated that solutions may be obtained for specific values of inputs by numerical means only. Moreover, general solutions are usually not available. Thus it is of extreme importance to understand the exact nature of the process so that simplified equations may be deduced by neglecting secondary terms in the equations to approximately similate the physical process. If the process is very well understood, a lowering of the order of the differential equation is generally possible. Under these conditions a discontinuity of the state variables representing the process can appear in the mathematical analysis of the model for a bang-bang control while the actual physical process will not indicate any jump. It is on the safe side to adjust both the state variables and control of the system so that no discontinuity exists in the system while the control is kept at the neighborhood of the bang-bang type. The physical process under control may give a delay if the control has any inertia in it, e.g., the motion of a control rod in a nuclear reactor. Hence a bang-bang control can be realized only if the control rod has zero mass.

For bounded control variables it is usually true that an optimum linear system requires the controls operating at their extreme values, i.e., a bang-bang type of control system. This is the first kind of optimum control where the control variables switch at certain boundaries of the state variables. The control variables do not usually switch as a predetermined explicit function of time and do not exhibit any intermediate value except the extremes. As we are lowering the order of differential equations for modeling the process one must bear in mind that the discontinuity does not really hold for either the process or the control. It is thus desirable to investigate a method other than switching at certain boundaries of the state variables.

A switching boundary in the time domain can be obtained from the first kind of optimization if the starting conditions are known. However, such a system will produce large error if the system does not start with proper conditions as planned. Using the particular switching boundary as the reference trajectory, a second optimum system can be devised if the system starts at a reasonable neighborhood of the reference trajectories.

The deviation from the reference trajectory at any starting point can be reduced considerably by using a second optimum procedure -- by the method of Dynamic Programming[1] or Pontryagin Maximim Principle [7]. The reference trajectory may exhibit piece-wise continuous input (control) under the first optimum procedure. However, the final input (control) will be continuous. By using a quadriatic index of performance, a time varying feedback control system can be obtained so that any deviation of the starting condition can be eliminated by the optimum procedure. This forces the state variables to follow the scheduled reference trajectories as close as possible. Thus the final trajectory is essentially independent of the starting conditions. Continuity relations for the state and control variables are used at the time when there is a discontinuity of the reference control variables (bang-bang). By this procedure no discontinuity will occur for all the variables. The control variables are essentially modified bang-bang with continuous smooth change instead of step function between the extremes.

Compared to the method of state variables the closed form solution given by the optimum control law for a nuclear reactor start-up has the advantage of being less susceptible to random noise which may be present in the instrumentation. These facts will be discussed later.

(1) Simplification of the Processes.

Nuclear reactor analysis starts with the transport equation (integral equation) in which the independent variables are not only space and time but also neutron energy and scattering angle. A simplication is made by integrating and averaging the angles and dividing the energy spectrum into discrete energy groups, which gives the multiple group diffusion equations. If the energy groups are reduced to two, the fast and thermal neutron groups, and the effect of one delay neutron precursor group is added then the partial differential equations become[3]

$$L\psi = V^{-1} \frac{\partial \psi}{\partial t}$$

$$L = \begin{bmatrix} \nabla D^1 \nabla - \Sigma^1 & \nu(1 - \beta)\Sigma_f{}^2 & \lambda \\ \Sigma_s{}^1 & \nabla D^2 \nabla - \Sigma_a{}^2 & 0 \\ 0 & \nu\beta\Sigma_f{}^2 & \lambda \end{bmatrix}$$

$$\psi = \begin{bmatrix} \phi^1 \\ \phi^2 \\ c \end{bmatrix} \qquad V^{-1} = \begin{bmatrix} \frac{1}{V_1} & 0 & 0 \\ 0 & \frac{1}{V_2} & 0 \\ 0 & 0 & 1 \end{bmatrix}$$

where:

D^j = diffusion constant

Σ^j = removal cross section

ν = neutrons produced per fission

β = delayed neutron fraction

λ = precursor decay constant

ϕ^j = neutron flux

c = precursor concentration

$\Sigma_s{}^j$ = scattering cross section

$\Sigma_a{}^j$ = absorption cross section

$\Sigma_f{}^j$ = fission cross section

V_j = neutron speed

j = 1, thermal energy group

j = 2, fast energy group

Further approximation can be made by integrating and averaging the neutron flux spatially, thus the so called point reactor kinetic equations are[6]: --

$$\frac{d\phi}{dt} = \frac{\Delta K - \beta}{\Omega}\phi + \lambda c \qquad (2\text{-a})$$

$$\frac{dc}{dt} = \frac{\beta}{\Omega}\phi - \lambda c \qquad (2\text{-b})$$

where:

ϕ = spatially independent neutron flux

ΔK = reactivity

Ω = neutron generation time, the average time before one neutron generates one prompt neutron or one precursor

For reactivity less than one dollar $\frac{d\phi}{dt}$ may be neglected in Equation (2-a), see for example Smets[10]. With this approximation, elimination of c between Equations (2-a) and (2-b) gives,

$$\frac{dx}{dt} - \frac{1}{(1-\rho)\lambda}\frac{d\rho}{dt} = \frac{\rho}{1-\rho} \tag{3}$$

where

$$\rho = \Delta K/\beta \qquad \text{and} \qquad \frac{dx}{dt} = \frac{1}{\lambda\phi}\frac{d\phi}{dt} \quad .$$

Defining q as a function of n and ρ,

$$q = \frac{1}{\lambda}\,\ell n\left[\frac{(1-\rho)\ \phi}{(1-\rho_o)\ \phi_o}\right] \tag{4}$$

where ρ_o and ϕ_o are reference values of ρ and ϕ. Differentiating Equation (4) and referring to the definition of $\frac{dx}{dt}$, Equation (3) may be written,

$$\frac{dq}{dt} = m \tag{5}$$

where

$$m = \frac{\rho}{1-\rho} \quad , \qquad \text{or} \qquad \rho = \frac{m}{1+m} \tag{6}$$

It is well known that the Kinetics Equations (2-a) and (2-b) are nonlinear in ϕ as output and ΔK as input. By manipulation of the variables the very simple linear relation given in Equation (5) is obtained. The input ρ is a function of the control m (Equation 6) and the output q is a function of the flux ϕ and the input ρ (Equation 4) as shown in Figure 1.

Using the relation

$$1 - \rho = \frac{1}{1+q} \tag{7}$$

An alternate block diagram is shown in Figure 2 in which q is obtained by measuring n alone, eliminating the coupling with the input ρ.

Equation (5) is of the first order while Equation (2) is of second order. By this approximation the order of the differential equation is reduced by one. However, since the control ΔK will not jump due to the inertia of the control rods, the flux ϕ should not jump according to equation (2-a). Therefore both q and m are continuous in Equation (5) although the reference control M may be of bang-bang type.

(2) <u>The Reference Trajectory - First Optimization.</u>

In order to develop maximum power in the shortest possible time with the restriction that the reactivity will not exceed a certain bound (say \$0.70), the reference control M must be of a bang-bang type in consistency with Equation (5).

A common reactor start-up sequence is as follows: the power is constant at a low level prior to time $\sigma = 0$. At $\sigma = 0$ it is desired to increase the power at a constant period $(\phi/\frac{d\phi}{dt})$ until a desired power level is reached and thereafter maintain the power constant. The reference response for this start-up program is,

$$\begin{aligned} Q_a(\sigma) &= a\sigma & 0 \leq \sigma < T_1 \\ Q_b(\sigma) &= aT_1 & T_1 \leq \sigma \leq T_2 \end{aligned} \tag{8}$$

where T_1 is a fixed intermediate time and "a" is a constant. Consistent with the fact that the desired input and output will satisfy the differential equation, the reference inputs are piece-wise continuous with a jump at $\sigma = T_1$,

$$\begin{aligned} M_a(\sigma) &= a & 0 \leq \sigma < T_1 \\ M_b(\sigma) &= 0 & T_1 \leq \sigma \leq T_2 \end{aligned} \tag{9}$$

The piece-wise reference input has a physical interpretation in terms of the control rod position. When the reference output is constant reactor period, the reference position of the control rods is that position which results in constant positive reactivity. When the reference output is constant power level, the reference position of the control rods is for zero reactivity.

(3) The Second Optimization.

The optimum control system will be defined as the control system which minimizes the integral squared error from the present time t to a final time T_2. The principle of dynamic programming applies, that is, no matter what the control has been prior to the present time, the control will be optimal for all future time up to the final time T_2. The reference input $M(\sigma)$ is piece-wise continuous. The subscripts a and b refer to desired inputs and outputs for two different time intervals. Thus,

$$e(t) = \int_t^{T_1} \{\xi[Q_a(\sigma) - q(\sigma)]^2 + \nu[M_a(\sigma) - m(\sigma)]^2\} d\sigma + \int_{T_1}^{T_2} \{\xi[Q_b(\sigma) - q(\sigma)]^2 + \nu[M_b(\sigma) - m(\sigma)]^2\} d\sigma \tag{10}$$

where: $e(t)$ = error criterion

$q(\sigma)$ = output signal

$Q(\sigma)$ = reference signal

$M(\sigma)$ = reference input, which is piece-wise continuous

σ = dummy time variable representing future time

t = present time

T_2 = termination time of the control system

ξ, ν = weighting factors

There is one boundary condition for the value of q in Equation (5) at the present time $\sigma = t$. The final value of the output is not fixed, but the natural boundary conditions will be imposed.

OPTIMUM CONTROL LAW

Converting to the Pontryagin form we define,

$$u(t;\sigma) = m(\sigma)$$

$$x_1(t;\sigma) = q(\sigma) \tag{11}$$

$$x_2(t;\sigma) = \int_{\tau=t}^{T_1} \{\xi[Q_a(\tau) - q(\tau)]^2 + \nu[M_a(\tau) - m(\tau)]^2\} d\tau$$

$$+ \int_{\tau=T_1}^{\sigma} \{ \xi[Q_b(\tau) - q(\tau)]^2 + \nu[M_b(\tau) - m(\tau)]^2 \} \, d\tau$$

Thus

$$\frac{dx_1(\sigma)}{d\sigma} = u(\sigma) = f_1 \tag{12}$$

and

$$\frac{dx_2(\sigma)}{d\sigma} = \xi[Q(\sigma) - x_1(t;\sigma)]^2 + \nu[M(\sigma) - u(t;\sigma)]^2 = f_2 \tag{13}$$

where:

$$Q = Q_a \ \& \ M = M_a \text{ if } t < T_1 \quad ,$$

$$Q = Q_b \ \& \ M = M_b \text{ if } T_1 \leq t \leq T_2 .$$

The optimum system is defined as the system for which,

$$S(t,T_2) = \sum_{i=1}^{2} c_i x_i(t;\sigma = T_2) \tag{14}$$

where: $c_1 = 0$ and $c_2 = 1$,

is a minimum with respect to $u(t;\sigma)$. The Hamiltonian, given in Appendix A, is,

$$H = \sum_{i=1}^{2} p_i(t;\sigma) \, f_i \tag{15}$$

where $p_i(t;\sigma)$ is the auxiliary variable. From Equation (12),

$$H = p_1(t;\sigma) \, u(t;\sigma) + p_2(t;\sigma) \{ \xi[Q(\sigma)-x_1(t;\sigma)]^2 + \nu[M(\sigma) - u(t;\sigma)]^2 \} \tag{16}$$

For $S(t,T_2)$ to be a minimum, H must be a maximum. For the unsaturated case,

$$\frac{\partial H}{\partial u^*} = 0 = p(t;\sigma) - 2\nu p_2(t;\sigma)[M(\sigma) - u^*(\sigma)] \tag{17}$$

or

$$u^*(t;\sigma) = M(\sigma) - \frac{1}{2\nu}\frac{p_1(t;\sigma)}{p_2(t;\sigma)} \tag{18}$$

where the asterisk denotes the optimum condition.

DIFFERENTIAL EQUATIONS FOR THE AUXILIARY VARIABLES

The previous section developed the optimum control law in terms of auxiliary variables. In order to complete the derivation of the optimum control law, it is necessary to develop the differential equations for the auxiliary variables. From Equation (A-6) of APPENDIX A,

$$\frac{dp_1(t;\sigma)}{d\sigma} = 2\xi p_2(t;\sigma)[Q(\sigma) - x_1(t;\sigma)] \tag{19a}$$

$$\frac{dp_2(t;\sigma)}{d\sigma} = 0 \tag{19b}$$

From Equation (19b), $p_2(t;\sigma)$ is not a function of σ, but may be an arbitrary function of the parameter t, $p_2(t;\mu) = f(t)$, such that the end point condition, Equation (A-4) is satisfied for all t. For Equation (A-4) to be satisfied for all t, $p_2(t;\sigma)$ must be constant. With $c_2 = 1$ and Equation (14), we have,

$$p_2(t;\sigma) = -1 \tag{20}$$

By substituting Equation (20) into Equation (18) and then the quantity $u^*(t,\sigma)$ for $\frac{dx_1(t;\sigma)}{d\sigma}$ by differentiating Equation (19a) with respect to σ, we have,

$$\frac{d^2p_1(t;\sigma)}{d\sigma^2} = 2\xi[\frac{dQ(\sigma)}{d\sigma} - M(\sigma) + \frac{1}{2\nu}p_1(t;\sigma)] \tag{21}$$

The desired input and output should in general satisfy the original system differential equation. This insures that minimization of the error criterion is compatible with the system dynamics. If the original system differential equation is not satisfied by the desired input and output, it is not possible to reduce the error criterion to zero.

With this requirement,

$$\frac{dQ(\sigma)}{d\sigma} = M(\sigma) \tag{22}$$

and Equation (21) becomes

$$\frac{d^2p_1(t;\sigma)}{d\sigma^2} - \omega^2 p_1(t;\sigma) = 0 \tag{23}$$

where $\omega^2 = \xi/\nu$.

For the time region $T_1 \leq t \leq T_2$ the solution to Equation (23) is,

$$p_1(t;\sigma) = A_b \cosh[\omega(\sigma - t)] + B_b \sinh[\omega(\sigma - t)] \tag{24}$$

where A_b and B_b are arbitrary constants to be determined. From Equations (A-4) and (14) the natural boundary condition, which applies to the free terminal point problem, is,

$$p_1(t;\sigma{=}T_2) = - c_1 = 0 \tag{25}$$

which requires,

$$A_b = - B_b \tanh[\omega(T_2 - t)] \tag{26}$$

or,

$$p_1(t;\sigma) = B_b \left\{ \sinh[\omega(\sigma-t)] - \tanh[\omega(T_2 - t)] \cosh[\omega(\sigma-t)] \right\} \tag{27}$$

substituting Equation (27) into Equation (19a),

$$x_1(t;\sigma) = Q_b(\sigma) + \frac{B_b}{2} \frac{\omega}{\xi} \frac{\cosh[\omega(T_2 - (\sigma))]}{\cosh[\omega(T_2 - t)]} \tag{28}$$

Using the equivalence between $x_1(t;\sigma)$ and $q(\sigma)$ expressed by Equation (11), Equation (28) becomes,

$$q(\sigma) = Q_b(\sigma) + \frac{B_b}{2} \frac{\omega}{\xi} \frac{\cosh[\omega(T_2-\sigma)]}{\cosh[\omega(T_2-t)]} \tag{29}$$

The constant B_b is evaluated by requiring $q(\sigma)$ to equal the measured value $q^*(t)$ at $\sigma = t$,

$$B_b = -2\frac{\xi}{\omega}[Q_b(t) - q^*(t)] \tag{30}$$

Substituting Equations (27) and (30) into Equation (18) with the change in variables given[11],

$$m^*(\sigma) = M_b(\sigma) - \omega[Q_b(t) - q^*(t)]\left\{\sinh[\omega(\sigma-t)] - \tanh[\omega(T_2 - t)]\cosh[\omega(\sigma - t)]\right\} \tag{31}$$

and in particular at the present time $\sigma = t$,

$$m^*(t) = M_b(t) + \omega[Q_b(t) - q^*(t)]\tanh[\omega(T_2 - t)] \tag{32}$$

$$T_1 \leq t \leq T_2$$

The equivalent expression for $m^*(t)$ in the first time interval $t \leq T_1$ is derived in APPENDIX B.

With the desired input and output given by Equations (8) and (9), the control laws for the two time intervals become,

$$m^*(t) = \omega[aT_1 - q^*(t)]\tanh[\omega(T_2 - t)] \quad T_1 \leq t \leq T_2 \tag{33}$$

$$m^*(t) = a\left\{1 - \cosh[\omega(T_2 - T_1)]\,\mathrm{sech}[\omega(T_2 - t)]\right\} + \omega[at - q^*(t)]\tanh[\omega(T_2 - t)] \tag{34}$$

$$t < T_1$$

(4) Random Noise Considerations.

The optimum control law given by Equations (33) and (34) can be implemented as shown by the block diagram in Figure 3. Random noise[2], ${}^k n(t)$, may be introduced into the feedback signal, ${}^k q(t)$, by the instrumentation such as the neutron detectors. In this section, the amount of error introduced into the optimum control system shown in Figure 3 will be compared to the amount of error introduced into a typical state variable switching system shown in Figure 4.

The actual system output, ${}^k y(t)$, is related to the

measured system output as follows,

$$^{k}q(t) = {}^{k}y(t) + {}^{k}n(t) \tag{35}$$

The average random noise is assumed to be zero, $\widetilde{^{k}n(t)} \rightarrow 0$. The low pass filter characteristic of the process causes all actual system output records to approach a single value, $y(t)$, i.e.,

$$^{k}y(t) \rightarrow y(t). \tag{36}$$

The actual output approaches the average measured system output,

$$y(t) \rightarrow \widetilde{^{k}q(t)} = x_1(t) \tag{37}$$

where the variable $x_1(t)$ may be considered to be deterministic for the optimization problem. The variable $^{k}q(t)$ is reserved for the random process.

The formulation of the optimum control law changes very little for this case. In Equations (5) and (10) the quantity $q(\sigma)$ becomes $\widetilde{^{k}q(\sigma)}$ where,

$$\widetilde{^{k}q(\sigma)} = \widetilde{^{k}y(\sigma)} + \widetilde{^{k}n(\sigma)} = x_1(t;\sigma) \tag{38}$$

which is identical to the second line of Equation (11), if $q(\sigma)$ becomes $^{k}q(\sigma)$. It can be proved that the previous analysis holds also for this particular (though common) type of random process.

The error will be defined as the difference between the desired system output and the actual system output,

$$^{k}\epsilon(t) = \begin{cases} at - {}^{k}y(t) & \text{for } t < T_1 \\ aT_1 - {}^{k}y(t) & \text{for } T_1 \leq t \leq T_2 \end{cases} \tag{39}$$

The autocorrelation function of the random noise is not zero, thus, $[\widetilde{^{k}y(t)}]^2 \neq [\widetilde{^{k}q(t)}]^2$. From Figure 3 and Equations

(33) and (34),

$$\frac{d}{dt}[{}^{k}y(t)] - a = b(t)[at - {}^{k}y(t) - {}^{k}n(t)] - a\,\frac{\operatorname{sech}[\omega(T_2-t)]}{\operatorname{sech}[\omega(T_2-T_1)]} \tag{40a}$$

for $t < T_1$, and

$$\frac{d}{dt}[{}^{k}y(t)] = b(t)[aT_1 - {}^{k}y(t) - {}^{k}n(t)] \tag{40b}$$

for $T_1 \leq t \leq T_2$, where $b(t) = \omega \tanh[\omega(T_2 - t)]$. Because only the effect of the noise is under consideration, the last term in Equation (40a) may be dropped, which with Equations (39) leads to the following result,

$$\frac{d}{dt}[{}^{k}\epsilon(t)] + b(t)[{}^{k}\epsilon(t)] = b(t)[{}^{k}n(t)] \tag{41}$$

The solution of Equation (41) in integral form is[5],

$${}^{k}\epsilon(t) = {}^{k}\epsilon(0)\eta(t) + \eta(t)\int_0^t \frac{b(\tau)\,{}^{k}n(\tau)}{\eta(\tau)}\,d\tau \tag{42}$$

where,

$$\eta(t) = \exp[-\int_0^t b(\tau)d\tau]$$

If the output signal and noise are not correlated, the mean-squared value of $\varepsilon(T_2)$ is given by[5],

$$[{}^{k}\widetilde{\varepsilon(T_2)}]^2 = [{}^{k}\widetilde{\varepsilon(0)}]^2\,\eta^2(T_2) + \eta^2(T_2)\int_0^{T_2}\frac{b(\alpha)}{\eta(\alpha)}\,d\alpha\int_0^{T_2}\frac{b(\beta)}{\eta(\beta)}\,\gamma_{nn}(\alpha,\beta)d\beta \tag{43}$$

where $\gamma_{nn}(\alpha,\beta)$ is the autocorrelation function of the noise. When the random process is stationary, the autocorrelation function becomes $\gamma_{nn}(\alpha-\beta)$.

For most of the operation of the optimum control system $\omega(T_2-t)$ will be large, therefore $\tanh[\omega(T_2-t)]$ will be approximately unity except near the neighborhood of $t = T_2$. Thus the transfer function from Equation (41) becomes,

$$\frac{k_{\varepsilon(s)}}{k_{n(s)}} = \frac{\omega}{s+\omega}$$

For a stationary process, a typical autocorrelation function for the noise may be given as,

$$\gamma_{nn}(\tau) = Ke^{-\zeta|\tau|} \tag{44}$$

where K and ζ are constants. The autocorrelation function of the output, $\gamma_{\varepsilon\varepsilon}(\tau)$, is found from the Weiner-Khinchin[2] and the input-output relations to be,

$$\gamma_{\varepsilon\varepsilon}(\tau) = \frac{K\zeta\omega^2}{\omega^2-\zeta^2}\left[\frac{1}{\zeta}e^{-\zeta|\tau|} - \frac{1}{\omega}e^{-\omega|\tau|}\right] \tag{45}$$

and the mean-square error is evaluated by letting τ equal zero,

$$\gamma_{\varepsilon\varepsilon}(\tau=0) = \left[\widetilde{{}^{k}\varepsilon(T_2)}\right]^2 = \frac{\omega K}{\omega+\zeta} \tag{46}$$

Both ω and ζ are positive, therefore the mean-square error is less than K.

For the state variable switching system, ${}^{k}q(t)$ is compared to $Q(T_2)$, and the switch is positioned off when the state variable ${}^{k}q(t)$ equals the desired output $Q(T_2)$. In Figure 4 the error becomes,

$${}^{k}\varepsilon(T_2) = Q(T_2) - {}^{k}y(T_2) = [Q(T_2) - {}^{k}q(T_2)] - {}^{k}n(T_2) \tag{47}$$

and the mean-square error is,

$$\left[\widetilde{{}^{k}\varepsilon(T_2)}\right]^2 = \left[\widetilde{n(T_2)}\right]^2 \tag{48}$$

With the autocorrelation function of Equation (44), the mean-square error is,

$$\left[\widetilde{{}^{k}\varepsilon(T_2)}\right]^2 = \gamma_{nn}(\tau=0) = K \tag{49}$$

For this case, the mean-square error is always less for the optimum control system than for the state variable switching system.

For unit white noise, the autocorrelation function is given by,

$$\gamma_{nn}(\alpha-\beta) = \delta(\alpha-\beta) \tag{50}$$

When the initial error is zero, substitution of Equation (50) into (43) yields,

$$[\widetilde{\varepsilon(T_2)}]^2 = \gamma_{\varepsilon\varepsilon}(\tau=0) = \frac{\omega}{3}\tanh^3(\omega T_2) \tag{51}$$

Because the hyperbolic tangent never exceeds unity, the mean-square error has an upper bound. For comparison, the mean-square error in the state variable switching system with white noise is unbounded for all ω.

DISCUSSION

Optimization techniques were applied to the simplified nuclear reactor kinetics equations with a specialized piece-wise continuous reference input. The closed form optimum control system is superior to the state variable switching system in the following particulars:

a) When random noise is added to the output, the optimum control system tends to have a smaller mean-square error than the state variable switching system.

b) For nuclear rocket control, due to the inertia of the control rods, abrupt changes in position required by the state variable switching system, are physically impossible. The continuous closed form optimum control system leads to a more accurate physical representation of the control rods.

c) The optimum control appears to have greatest potential in the field of nuclear propelled rockets. For this application, noise introduced into the output will affect the rocket thrust. Noise in the state variable switching system may cause switching at a time different from originally scheduled and may completely change the thrust program. The closed form optimum control system will tend to return to the original thrust program at the right time while the noise subsides.

ACKNOWLEDGEMENT

The research presented in this paper is supported by the National Aeronautics and Space Administration under Research Grant Number NsG 14-59.

REFERENCES

(1) Bellman, R. "Dynamic Programming," Princeton University Press, 1957.

(2) Bendat, J. S., "Principles and Applications of Random Noise Theory," New York, John Wiley, 1958.

(3) Davidson, B. "Neutron Transport Theory," Oxford University Press, 1957.

(4) Kopp, R. E., "Pontryagin Maximum Principle," in the book Optimization Techniques, edited by George Leitmann, New York, Academic Press, 1962, p. 255.

(5) Laning, J. H. and Battin, R. H., "Random Processes in Automatic Control," New York, McGraw-Hill, 1956, p. 404.

(6) Lewins, J., "The Use of the Generation Time in Reactor Kinetics," Nuclear Science and Engineering, Vol. 7, 1960, p. 122.

(7) Pontryagin, L. S. et al, "The Mathematical Theory of Optimal Processes," New York, John Wiley and Sons, 1962.

(8) Shen, C. N. and Haag, F. G., "Adaptive Control for Nuclear Reactor Start-up and Regulation," Transactions of the American Nuclear Society, Vol. 6, June 1963, p. 109.

(9) Shen, C. N. and Haag, F. G., "Application of Optimum Control to Nuclear Reactor Start-up," Institute of Electrical and Electronics Engineers' Transactions on Nuclear Science, Vol. NS-11, April 1964, p. 1.

(10) Smets, H. B., "Reactor Dynamics at Low Power," Proceedings of the Second U.N. International Conference on the Peaceful Uses of Atomic Energy, Vol. 11, 1958, p. 237.

APPENDIX A

Pontryagin Maximum Principle[4],[7]

A system operates between time $\sigma = t$ and $\sigma = T_2$. The system is described by a set of differential equations,

$$\frac{dx_i(\sigma)}{d\sigma} = f_i(x_1, x_2, \ldots x_j \ldots x_n, x_{n+1}, u_1, u_2, \ldots u_k \ldots u_r, \sigma)$$
$$x_i(\sigma = t) = x_i^o(t) \qquad i = 1, 2, \ldots n, n+1 \tag{A-1}$$

where $x_i(\sigma)$ are state variables, t is treated as a parameter and u_k are control variables. The problem is to minimize,

$$S(T_2) = \sum_{i=1}^{n+1} c_i x_i(\sigma = T_2) \tag{A-2}$$

with respect to the control variables. Constraints may exist on the control variables, $\bar{u}(\sigma) \varepsilon U$, where U is the admissible class of control functions in r space, and $\bar{u}(\sigma)$ is the vector control function with components $u_k(\sigma)$.

An auxiliary variable $p_i(\sigma)$ is defined,

$$\frac{dp_i(\sigma)}{d\sigma} = - \sum_{j=1}^{n+1} p_j(\sigma) \frac{\partial f_j}{\partial x_i} \tag{A-3}$$

The free terminal condition or natural boundary conditions are,

$$p_i(\sigma = T_2) = - c_i \qquad i = 1, 2, \ldots n, n+1 \tag{A-4}$$

A Hamiltonian is defined,

$$H[\bar{x}(\sigma), \bar{u}(\sigma), \sigma] = \sum_{i=1}^{n+1} p_i(\sigma) f_i[\bar{x}(\sigma), \bar{u}(\sigma), \sigma] \tag{A-5}$$

A sufficient condition for a minimum of S is that H be maximized with respect to the control vector at all times.

The sets of differential equations for the system and for the auxiliary variables are related to H by,

$$\frac{dx_i(\sigma)}{d\sigma} = \frac{\partial H}{\partial p_i} \qquad \text{and} \qquad \frac{dp_i(\sigma)}{d\sigma} = - \frac{\partial H}{\partial x_i} \tag{A-6}$$

APPENDIX B

Optimum Control Law for First Order Systems

The first piece of the piece-wise continuous input solution (prior to time T_1) is given by the solution to Equation (23),

$$p_1(\sigma) = A_a \cosh[\omega(\sigma-t)] + B_a \sinh[\omega(\sigma-t)], \quad t < T_1 \qquad \text{(B-1)}$$

Substituting Equation (B-1) into (19a) gives,

$$x_1(t;\sigma) = Q_a(\sigma) + \frac{\omega}{2\xi}\left\{A_a \sinh[\omega(\sigma-t)] + B_a \cosh[\omega(\sigma-t)]\right\} \qquad \text{(B-2)}$$

With the equivalence between $x_1(t;\sigma)$ and $q(\sigma)$ expressed by Equation (11), (B-2) becomes,

$$q^*(\sigma) = Q_a(\sigma) + \frac{\omega}{2\xi}\left\{A_a \sinh[\omega(\sigma-t)] + B_a \cosh[\omega(\sigma-t)]\right\} \qquad \text{(B-3)}$$

The constant B_a is evaluated by requiring $q(\sigma)$ to be equal to the measured value $q^*(t)$ at $\sigma = t$,

$$B_a = -\frac{2\xi}{\omega}\left[Q_a(t) - q^*(t)\right] \qquad \text{(B-4)}$$

and,

$$q^*(\sigma) = Q_a(\sigma) + \frac{A_a}{2}\frac{\omega}{\xi}\sinh[\omega(\sigma-t)] - [Q_a(t) - q^*(t)]\cosh[\omega(\sigma-t)] \qquad \text{(B-5)}$$

The last two boundary conditions are that the output signal and its derivative be continuous at time T_1. Equating Equations (29) and (B-5), and also equating their derivatives at $\sigma=T_1$ and eliminating B_b to solve for A_a gives,

$$\frac{A_a}{2\xi} = \frac{1}{\omega^2\psi_2}\left\{\left.\frac{dQ_b(\sigma)}{d\sigma}\right|_{\sigma=T_1} - \left.\frac{dQ_a(\sigma)}{d\sigma}\right|_{\sigma=T_1} - \omega[Q_a(T_1)-Q_b(T_1)]\Theta + [Q_a(t) - q^*(t)]\psi_1\right\} \qquad \text{(B-6)}$$

where: $\Theta = \tanh[\omega(T_2-T_1)]$

$$\psi_1 = \omega \left\{ \sinh[\omega(T_1-t)] + \Theta\cosh[\omega(T_1-t)] \right\}$$

$$\psi_2 = \cosh[\omega(T_1-t)] + \Theta\sinh[\omega(T_1-t)]$$

Substituting Equation (B-4) into (B-1) gives,

$$p_1(t;\mu) = -\frac{2\xi}{\omega}\,[Q_a(t)-q^*(t)]\,\sinh[\omega(\sigma-t) + A_a\,\cosh[\omega(\sigma-t)] \tag{B-7}$$

Substituting Equations (B-6) and (B-7) into (18) using (20) and with the change in variables given by (11) at $\sigma=t$,

$$m^*(t) = M_a(t) + \frac{1}{\psi_2}\left\{ \frac{dQ_b(\sigma)}{d\sigma}\bigg|_{\sigma=T_1} - \frac{dQ_a(\sigma)}{d\sigma}\bigg|_{\sigma=T_1} - \omega\Theta[Q_a(T_1)-Q_b(T_1)] + [Q_a(t) - q^*(t)]\psi_1 \right\} \qquad t < T_1 \tag{B-8}$$

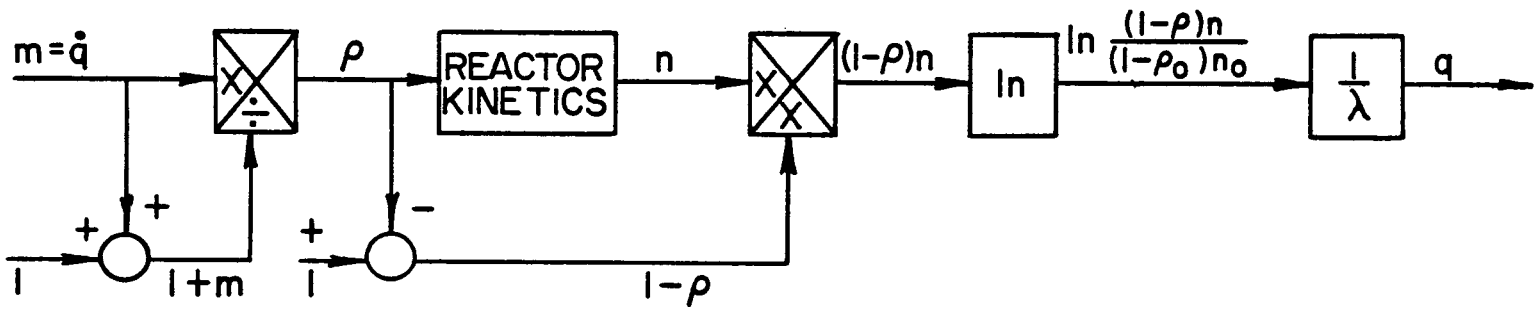

FIGURE 1 REACTOR KINETICS AND INSTRUMENTATION (COUPLED SYSTEM)

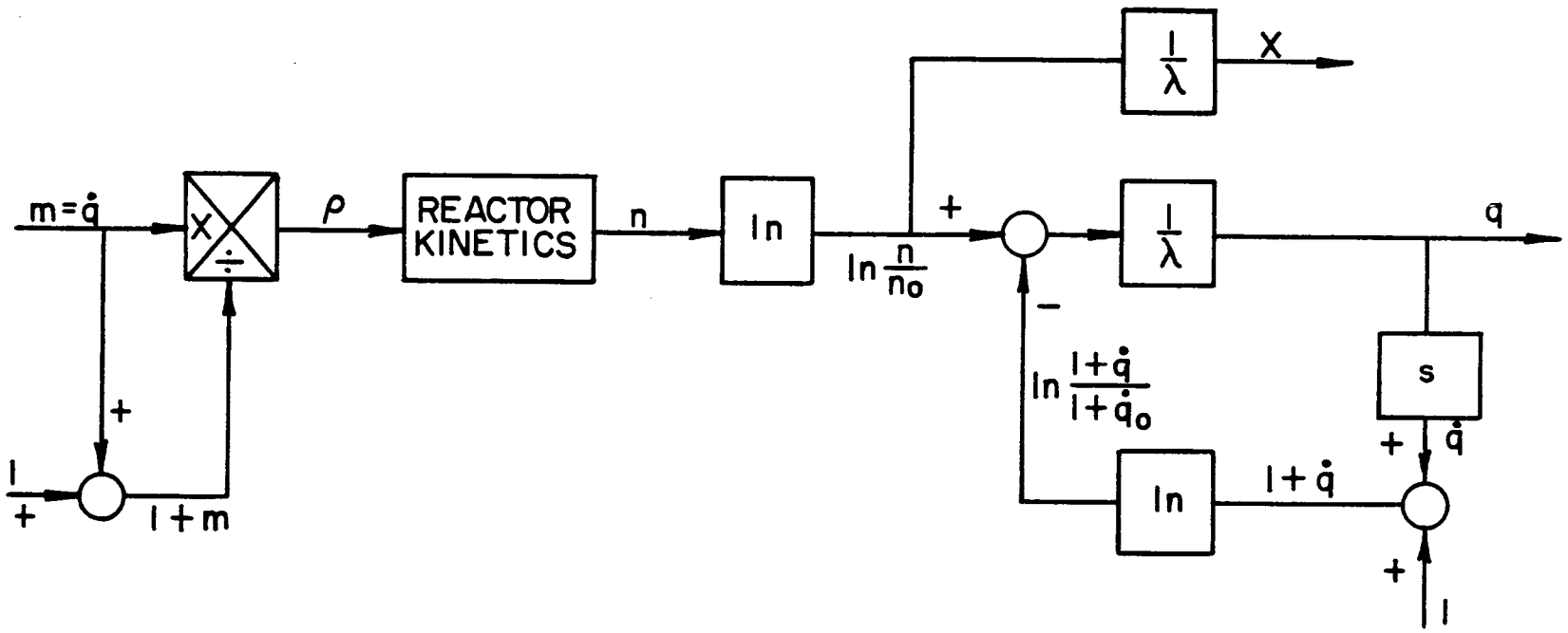

FIGURE 2 REACTOR KINETICS AND INSTRUMENTATION (UNCOUPLED SYSTEM)

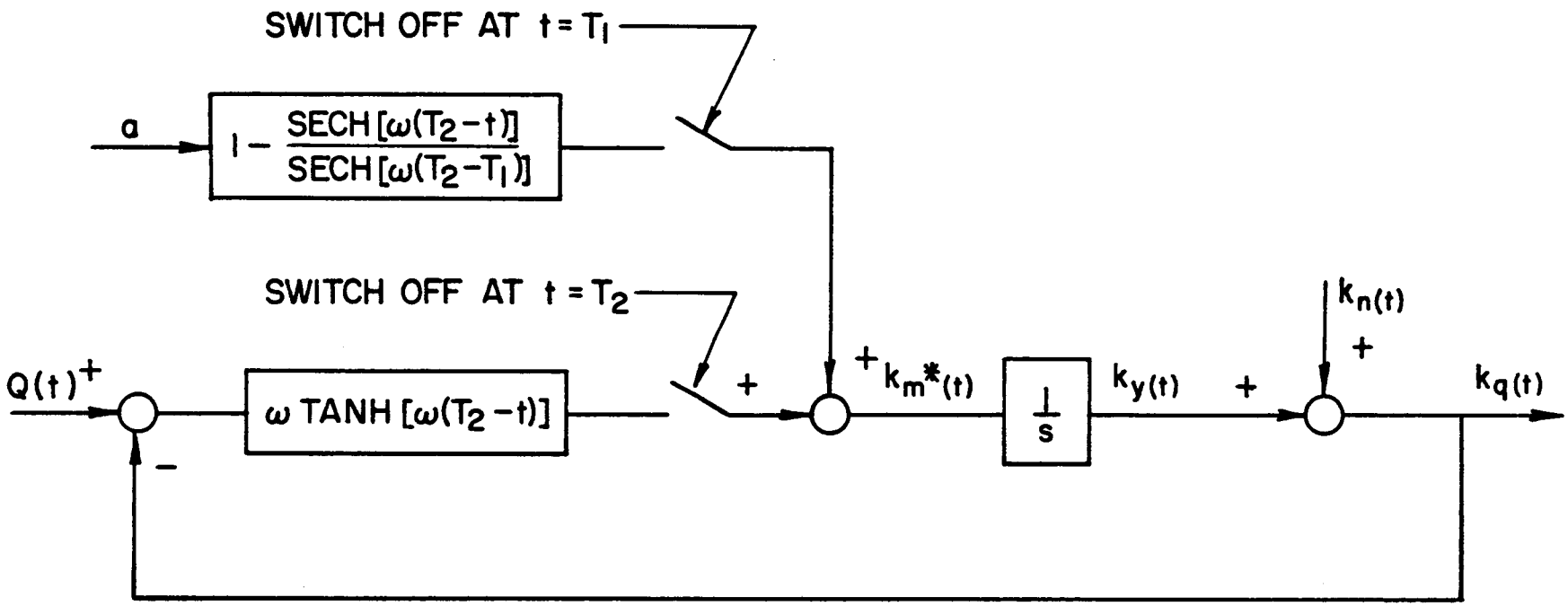

FIGURE 3 OPTIMUM CONTROL SYSTEM WITH ADDITIVE NOISE

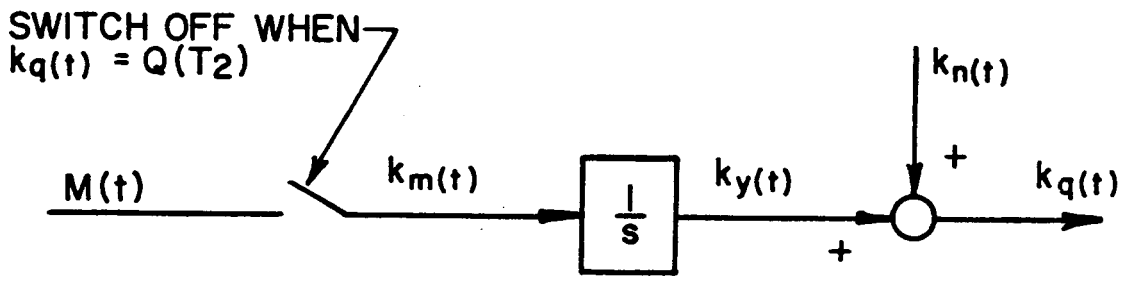

FIGURE 4 OPTIMUM STATE VARIABLE SWITCHING SYSTEM WITH ADDITIVE NOISE