FACILITY FORM 602

N64-33219
(ACCESSION NUMBER)

11
(PAGES)

NASA CR 58836
(NASA CR OR TMX OR AD NUMBER)

(THRU)

1
(CODE)

13
(CATEGORY)

OTS PRICE

XEROX $ 1.00

MICROFILM $ .50

WT 21-155

HEAT-TRANSFER TESTS OF THE BOEING SHOCK-WAVE IMPINGEMENT MODELS IN THE JPL 21-INCH HYPERSONIC WIND TUNNEL

John J. Minich

Bain Dayman, Jr.

Bain Dayman, Jr., *Chief*
Aerodynamic Facilities Section

JET PROPULSION LABORATORY
CALIFORNIA INSTITUTE OF TECHNOLOGY
PASADENA, CALIFORNIA

May 3, 1964

CONTENTS

I. Introduction 1
II. Model Description 1
III. Wind Tunnel and Instrumentation 1
IV. Test Procedure 2
V. Data Reduction 2
VI. Results 3
Nomenclature 4
References 5
Table 1. Average aerodynamic parameters 6
Figures 7

FIGURES

1. Installation of cone-fin and wedge-fin models 7
2. Wedge-fin model and cone-fin model 8

I. INTRODUCTION

Wind-tunnel Tests 21-151 and 21-155 were tests of the Boeing Company (Huntsville, Alabama) shock-impingement heat-transfer models. The purpose of the tests was to determine heating rates and pressure distributions on the vertical fin in the area of impingement of a shock wave generated by the cone or wedge, respectively. The approximate aerodynamic parameters for the test were Mach No. 5.0, 6.0, and 8.0, with corresponding Reynolds No./in. of 0.02 through 0.10×10^6. The test variables and ranges were fin yaw angles from 0 to 10 deg.

The model configurations comprised two shock generators, two thermocouple and pressure-instrumented fins, and several ceramic-covered stainless-steel fins. All combinations of fins and shock generators were tested.

The test* was conducted at the Jet Propulsion Laboratory (JPL) during the periods of September 18 through 30, 1963 and February 10 through 17, 1964. The Boeing Company was represented by Mr. A. Murakoski.

II. MODEL DESCRIPTION

The models are shown in Fig. 1 and 2. A more detailed description of the models and components is contained in Ref. 1.

III. WIND TUNNEL AND INSTRUMENTATION

Reference 2 describes the construction and operating conditions of the 21-in. hypersonic wind tunnel. The wind tunnel has a nominal test-section size of 21 in. square, a Mach range from 5 to 10, a flexible-plate nozzle, and operates with continuous flow. Table 1 presents representative extreme values of the test-section flow parameters for the Mach numbers at which this test was conducted.

Pressures were recorded by an automatic-switching system which permitted a single transducer to convert all the pressures to a digitized signal.

Temperatures were recorded by an automatic-switching system which converted all thermocouple outputs to a digitized signal.

*The symbols used in this Report are defined in the Nomenclature.

IV. TEST PROCEDURE

The method of testing used was a transient heat-transfer technique, wherein the rate of temperature-change with respect to time of the inner side of the thin-walled model was measured. Prior to a run, the model was cooled by nitrogen gas emitted from a retractable shield which blanketed the model from the tunnel air stream. Each of the thermocouple signals was recorded every 0.05 sec for approximately 8 sec. The shield was retracted after 1 sec of thermocouple signal recording. After the thermocouple recording was completed, the shield was returned to cool the model. Pressure data and thermocouple data were not recorded simultaneously.

V. DATA REDUCTION

The temperature data were reduced to heating rates (BTU/ft^2 - sec) for each thermocouple location on the model as follows:

$$\dot{q} = \frac{\Delta T_w}{\Delta t} bC_p w$$

The heat-transfer coefficient was defined and obtained as follows:

$$h = \frac{\dot{q}}{T_t - T_w}$$

As an aid in determining the shock-impingement location, a portion of the test was devoted to testing the ceramic models. The procedure was similar to that used for the thermocouple-instrumented models. The ceramic fins were coated with temperature-sensitive paint. The color change of the paint was a function of the wall temperature, and the time the paint was exposed to a given temperature. Prior to a run, the model was cooled by the shield technique. The shield was removed from the stream, and high-speed color movies were taken of the paint. Comparisons of these color-change rates yielded some qualitative heating-rate data.

VI. RESULTS

The results of these tests have been reduced to local heating rates and forwarded to the Boeing Company. No attempt was made in this Report to interpret the results.

NOMENCLATURE

b	wall thickness (in.)
C_p	specific heat of wall material (BTU/lb - °R)
h	heat-transfer coefficient
$\dot{q}$	heating rate (BTU/ft^2 - sec)
q_∞	free-stream dynamic pressure (psi)
T_t	free-stream stagnation temperature (°R)
T_w	model wall temperature (°R)
w	specific weight of wall material (lb/in.^{3})
Δt	time increment (sec)
$\Delta T_w/\Delta t$	rate-of-change of model wall temperature with respect to time (°R/sec)

REFERENCES

1. The Boeing Company. Pre-Test Report for JPL Wind-Tunnel Tests 21-151 and 21-155. Huntsville, Alabama, Boeing, July 19, 1963. UNCLASSIFIED

2. Jet Propulsion Laboratory, California Institute of Technology. Wind-Tunnel Facilities at the Jet Propulsion Laboratory. Pasadena, California, JPL, January 1, 1962. (Technical Release No. 34-257) UNCLASSIFIED

Table 1. Average aerodynamic parameters

Parameter	Mach Number		
	5.0	6.0	8.0
Static pressure (psia)	0.15	0.03 min 0.07 max	0.005 min 0.026 max
Stagnation pressure (psia)	76.6	47.0 min 117.8 max	50.6 min 253.0 max
Dynamic pressure (psia)	2.53	0.75 min 1.88 max	0.23 min 0.86 max
Reynolds number (per in. x 10^{-6})	0.10	0.04 min 0.10 max	0.02 min 0.10 max

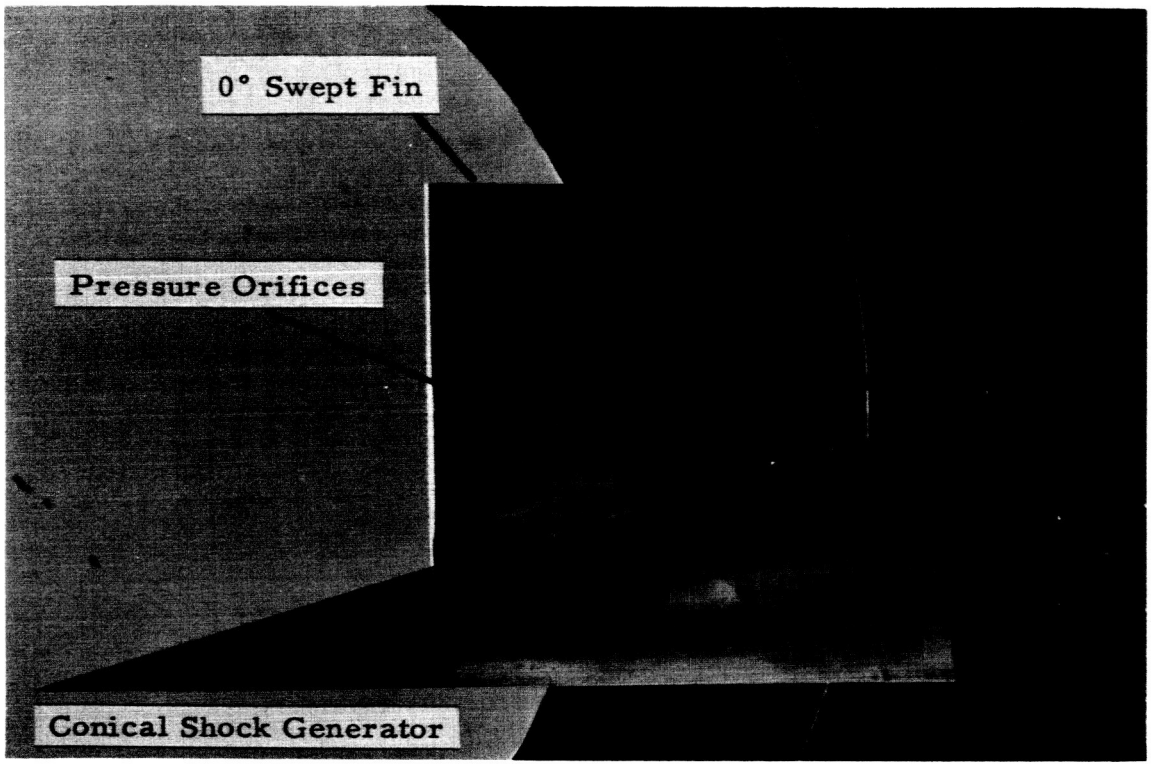

Fig. 1a Installation of Cone-Fin Model

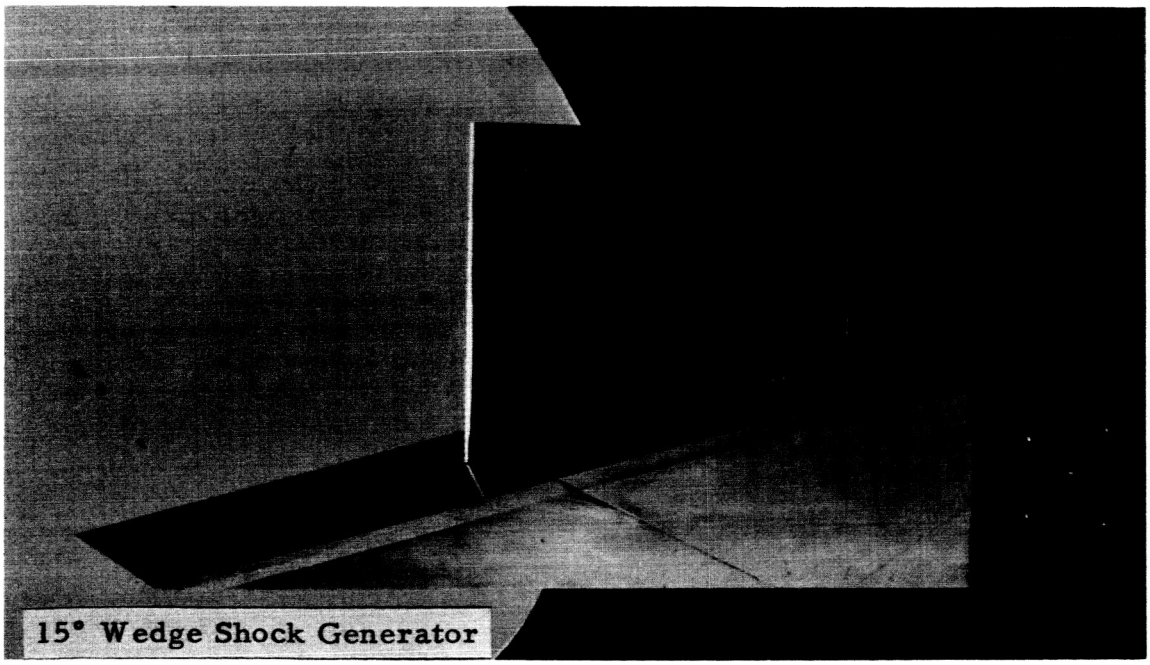

Fig. 1b Installation of Wedge-Fin Model

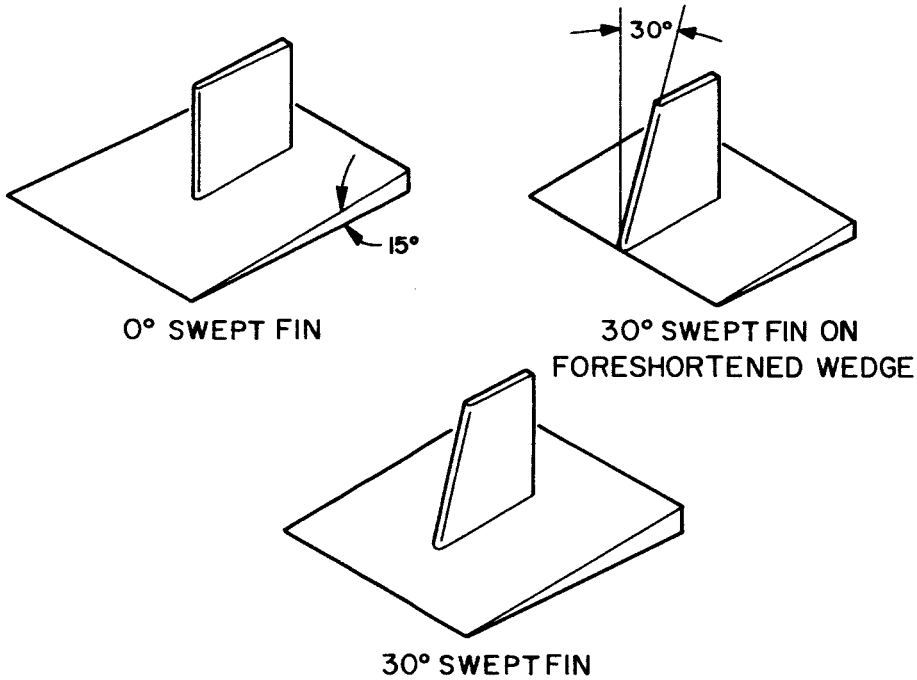

Fig. 2a Wedge-Fin Model

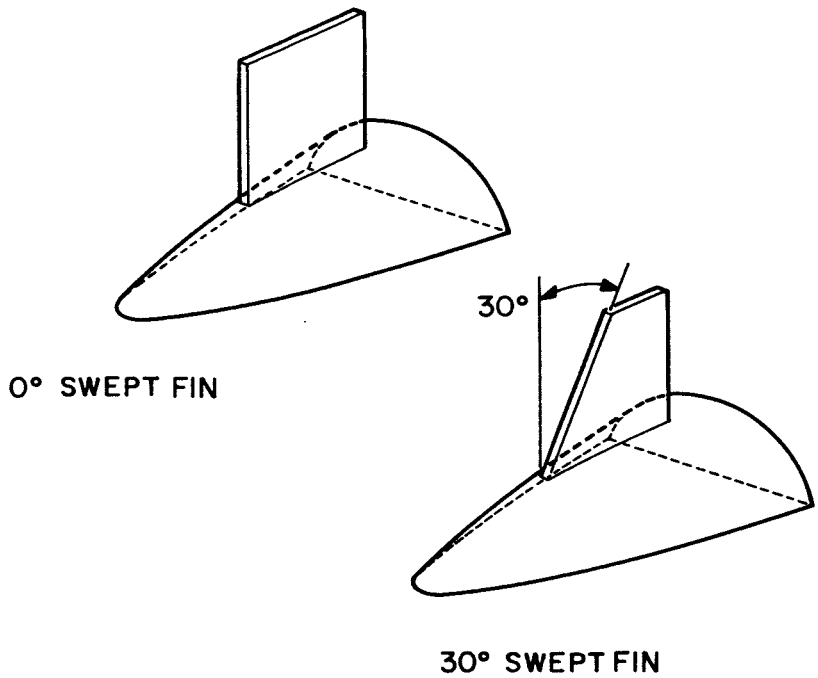

Fig. 2b Cone-Fin Model