ME-904

project
mercury

HANDBOOK OF INSTRUCTIONS FOR MEC MODEL 77 DIGITAL TO ANALOG CONVERTER

prepared for
National Aeronautics and Space Administration
Contract No. NAS 1-430

2 November 1960
Revised 18 October, 1961

Milgo Electronic Corporation
for
International Business Machine Corporation

in association with

WESTERN ELECTRIC COMPANY, INC.

LIST OF EFFECTIVE PAGES

TOTAL NUMBER OF PAGES IS 191, AS FOLLOWS:

Page No.	Issue	Page No.	Issue
*Title Page	18 October 61		
*A Page	18 October 61		
i thru iii	Original		
iv	Blank		
1-1 thru 1-5	Original		
1-6	Blank		
2-1 and 2-2	Original		
*2-3 and 2-4	15 June 61		
2-5 thru 2-38	Original		
*3-1 and 3-2	15 June 61		
3-3 thru 3-5	Original		
3-6	Blank		
4-1	Original		
4-2	Blank		
5-1 thru 5-3	Original		
5-4	Blank		
Parts List			
12 pages	Original		
* 4 pages	15 June 61		
6-1	Original		
Wire List			
48 pages	Original		
* 2 pages	15 June 61		
7-1 thru 7-8	Original		
*7-9	15 June 61		
7-10 thru 7-20	Original		
*7-21 thru 7-23	15 June 61		
7-24 thru 7-26	Original		
*7-27 thru 7-31	15 June 61		
7-32 thru 7-37	Original		
7-38	Blank		
Appendix Title Page	Original		
Pages 1 of 7 thru 7 of 7	Original		
Pages 1 of 4 thru 4 of 4	Original		
Pages 1 of 4 thru 4 of 4	Original		
Pages 1 and 2 of 2	Original		
Pages 1 and 2 of 2	Original		
Pages 1 and 2 of 2	Original		
Pages 1 and 2 of 2	Original		

* The asterisk indicates pages changed, added or deleted by the current change.

CASE FILE COPY

TABLE OF CONTENTS

Chapter			Page
I	GENERAL DESCRIPTION		
	1-1	Purpose	1-1
	1-2	Physical Description	1-1
	1-3	Input Signals	1-3
	1-4	Internal Operations	1-3
	1-5	Output Signals	1-5
II	THEORY OF OPERATION		
	2-1	General	2-1
	2-2	D-A Conversion	2-3
	2-3	Control Chassis, MEC Model 77-6A	2-9
	2-4	Data Summing Chassis, MEC Model 77-5A	2-13
	2-5	Monitor Chassis, MEC Model 77-4A	2-15
	2-6	External-Internal Reference Voltage	2-17
	2-7	Reference Chassis, MEC Model 77-10A	2-19
	2-8	DC Amplifier Chassis, MEC Model 63-4C	2-23
	2-9	Chopper Drive Chassis, MEC Model 77-9B	2-35
	2-10	D-A Test Control Unit, MEC Model 77-5AAA	2-37
III	OPERATION		
	3-1	Installation	3-1
	3-2	Operation Steps	3-4
IV	MAINTENANCE		
V	PARTS LIST		
VI	WIRE LIST		
VII	SCHEMATICS AND WIRING DIAGRAMS		
VIII	APPENDIX		
	Transistor Power Supply, MEC Model 165-4C		1-7
	-250v, -560v Power Supply, MEC Model 1576-3A		1-4
	+250v Power Supply, MEC Model 1576-4A		1-4
	TN46 Dual Emitter Follower		1 & 2
	TN57 Dual Pulse Amplifier		1 & 2
	TN58 Dual Emitter Follower		1 & 2
	TN134 Gated Oscillator and Squaring Circuit		1 & 2

LIST OF ILLUSTRATIONS

Figure		Page
1-1	Chassis Arrangement	1-2
1-2	MEC Model 77 Digital to Analog Converter	1-4
2-1	Digital to Analog Conversion	2-7
2-2	Control Chassis	2-9
2-3	Data Summing Chassis, Side View	2-13
2-4	Data Summing Chassis	2-14
2-5	Monitor Chassis	2-15
2-6	Reference Chassis	2-19
2-7	Block Diagram, Reference Chassis Circuits	2-21
2-8	DC Amplifier Chassis	2-28
2-9	Summing Amplifier	2-33
2-10	Integrating Amplifier	2-33
2-11	Differentiating Amplifier	2-33
2-12	Drift Stabilization	2-33
2-13	Chopper Drive Chassis	2-35
2-14	D-A Test Control Unit	2-37
7-1	Block Diagram, 7 Channel D-A Converter, Dwg. #E77B1A	7-3
7-2	Schematic, Control Chassis, Dwg. #D77S6A	7-5
7-3	Wiring Diagram, Control Chassis, Dwg. #D77W6A	7-7
7-4	Schematic, Data Summing Chassis, Dwg. #D77S5A	7-9
7-5	Wiring Diagram, Data Summing Chassis, Dwg. #D77W5A	7-11
7-6	Schematic, Monitor Chassis, Dwg. #D77S4A	7-13
7-7	Wiring Diagram, Monitor Chassis, Dwg. #D77W4A	7-15
7-8	Schematic, Reference Chassis, Dwg. #C77S10A	7-17
7-9	Wiring Diagram, Reference Chassis, Dwg. #C77W10A	7-19
7-10	Schematic, DC Amplifier Chassis, Dwg. #E63S4C	7-21
7-11	Wiring Diagram, DC Amplifier Chassis, Sheet 1 of Dwg. #D63W4C	7-23
7-12	Wiring Diagram, Filament DC Amplifier Chassis, Sheet 2 of Dwg. #D63W4C	7-25
7-13	Schematic, Mechanical Converter Test Set, Dwg. #63S4BX	7-27
7-14	Schematic, Chopper Drive Chassis, Dwg. #C77S9B	7-29
7-15	Wiring Diagram, Chopper Drive Chassis, Dwg. #D77W9B	7-31
7-16	Schematic, D-A Test Control Unit, Dwg. #C77S5AAA	7-33
7-17	Wiring Diagram, D-A Test Control Unit, Dwg. #C77W5AAA	7-35
7-18	Wiring Diagram, D-A Converter Rack, Dwg. #C77W1AA	7-37

LIST OF TABLES

		Page
2-1	D-A Conversion	2-4
2-2	Representative Test Control Settings	2-38
3-1	Analog Output Connector J28	3-1
3-2	Reference Connector J27	3-1
3-3	A-C Power Connector J28	3-2
3-4	Digital Input Connector #1 J29	3-2
3-5	Digital Input Connector #2 J30	3-3

CHAPTER I
GENERAL DESCRIPTION

1-1. PURPOSE

The MEC (Milgo Electronic Corporation) Model 77 Digital to Analog Converter provides seven channels of digital to analog conversion with outputs and reference voltages suitable for plotting on high speed analog plotting boards.

1-2. PHYSICAL DESCRIPTION (Figure 1-1 and 1-2)

1-2.1. The Digital to Analog (D-A) Converter is housed in a single relay rack approximately 24 inches wide, 22 inches deep and 74-1/8 inches high. Its weight is approximately 674 pounds. All chassis are of modular construction and employ 50 pin connectors to effect the connection of each chassis to the rack wiring. The location of each chassis is illustrated in Figure 1-1.

1-2.2. Two +250v Power Supplies (MEC Model 1576-4A) are located at the top of the rack; the "A" Supply on the left and the "B" Supply on the right. Directly beneath are the -250v, -560v "A" and "B" Power Supplies (MEC Model 1576-3A). These Power Supplies furnish the necessary operating voltages for the DC amplifiers positioned throughout the rack.

1-2.3. Below the -250v Power Supplies are four dual DC Amplifier Chassis (MEC Model 63-4C), three of which operate in conjunction with the three Data Summing Units (MEC Model 77-5A) located directly below each DC Amplifier Chassis. The fourth DC Amplifier Chassis, labeled Reference DC Amplifier in Figure 1-1, contains the reference amplifiers which generate the +35 and -35 analog reference voltages. Each of the four DC Amplifier Chassis contains two individual DC amplifiers designated A and B.

1-2.4. The Monitor Chassis (MEC Model 77-4A), located directly below the Reference DC Amplifier Chassis, provides meters and selector switches for monitoring all operating voltages through the D-A Converter. The two rack sections below the Monitor Chassis and the three Data Summing Chassis are occupied by the four remaining dual DC Amplifier Chassis and their associated Data Summing Chassis. The Data Summing Chassis contain the necessary relays and precision resistors engaged in the D-A conversion process.

1-2.5. Directly below the Data Summing Chassis are located the Chopper Drive Chassis (MEC Model 77-9B), the Reference Chassis (MEC Model 77-10A), and the Control Chassis (MEC Model 77-6A). The Chopper Drive Chassis generates the 94 cycle voltages necessary to drive the choppers in the stabilizer portion of the DC amplifiers. The Reference Chassis contains the internal ±35v analog reference voltage circuitry, in addition to the detection

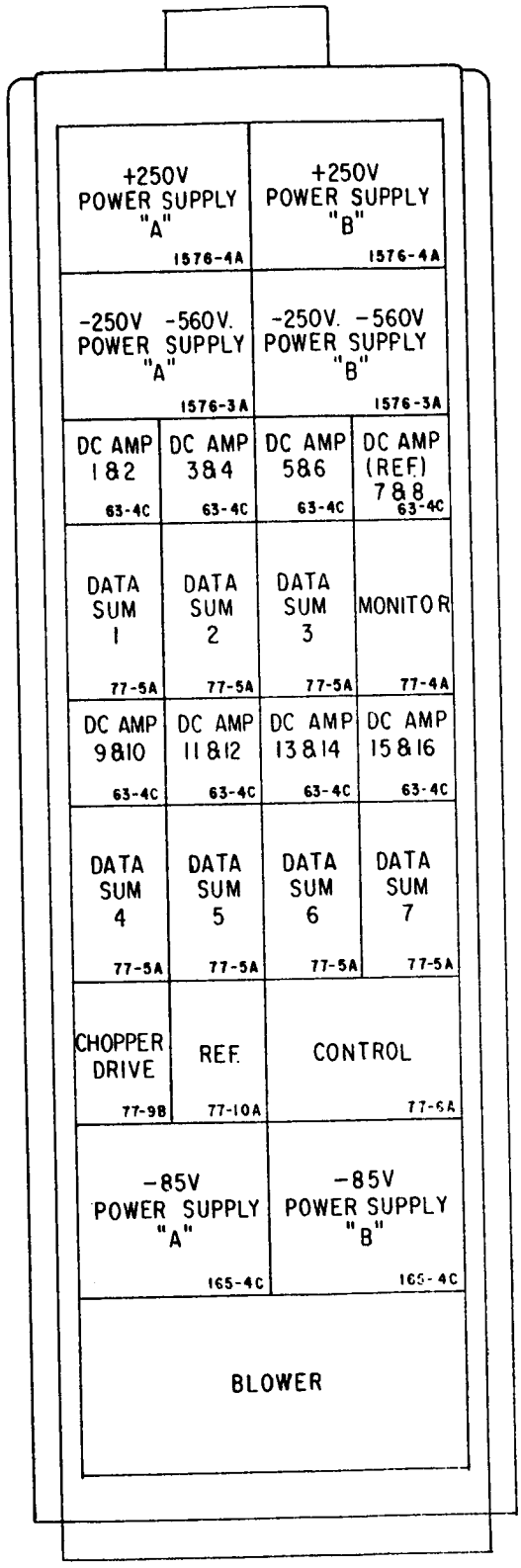

Figure 1-1. Chassis Arrangement

circuits which automatically switch from external to internal reference voltage at the occurrence of external reference voltage failure. The Control Chassis contains the STANDBY and POWER switches used to supply a-c power to the Power Supplies, and detection circuitry to detect failure of the operational Power Supplies. All Power Supplies are duplexed in the D-A Converter, and in the event of failure to a critical Power Supply, the detection circuits will automatically select the standby Power Supply causing it to furnish rack operating voltage. The "A" Power Supplies are the primary or operational supplies, and the "B" Power Supplies are the standby Supplies.

1-2.6. Located below the Chopper Drive, Reference, and Control Chassis are the Transistor Power Supplies (MEC Model 165-4C): the "A" Supply on the left, the "B" Supply on the right. These supplies furnish +12v, -20v and -85v to the transistor circuitry throughout the D-A Converter.

1-2.7. A two speed Blower, capable of delivering 400/500 cfm. for internal rack cooling is located at the lower front of the D-A Converter rack and should be operated at high speed at all times during operation.

1-2.8. In the lower rear of the rack is a mounting bracket, on which are mounted the input and output connectors; an a-c line voltage switch (S1), two input fuses (F1 and F2) and two red indicators (DS1 and DS2). The switch S1 is used to apply a-c power to the rack. Indicators DS1 and DS2 glow when switch S1 is in the ON position as a warning to personnel operating the unit. The D-A Converter power supplies may now be energized by utilizing the STANDBY and POWER switches located on the front panel of the Control Chassis. The D-A Converter normally operates from two phases of a 120vac ±10%, 60 ± 5 cps three phase system, however, it may also be operated from single phase, 120vac, 60cps by connecting input phases 1 and 2 together (Pins A and E on Figure 2-1) on the input power connector J28. Phase 1 current requirements are 4 amperes; phase 2, 5 amperes.

1-3. INPUT SIGNALS

Data input signals to the D-A Converter consist of ten parallel data input lines per channel, plus a "Read In" line which compels analog output voltages to maintain their previous levels during the arrival of new data on the input lines. A binary "O" or non-significant control signal is represented by a voltage level of 0v ±1/2v. A binary "1" or significant control signal is represented by a voltage level of -17v ±3v. The "Read In" line is normally at 0v ±1/2v and goes to -17v ±3v thus causing the DC amplifiers to "hold" during the read in of the new data. A +35v external reference voltage may be applied to the D-A Converter when it is slaved to associated analog equipment. If a +35 source is not available, the Converter is capable of generating its own internal ±35v reference voltages.

1-4. INTERNAL OPERATIONS

There are seven independent channels of digital to analog conversion utilized in the D-A Converter. Each channel converts ten bit words of binary weighted digital information into smoothly varying d-c analog voltages corresponding to the pattern of digital information received.

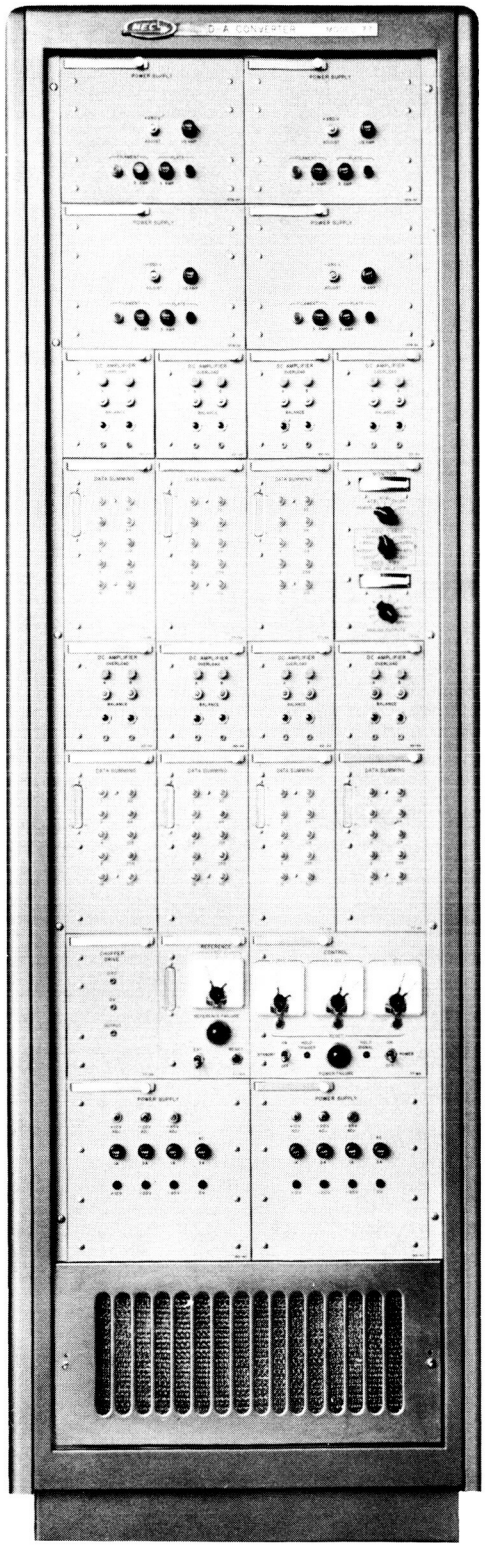

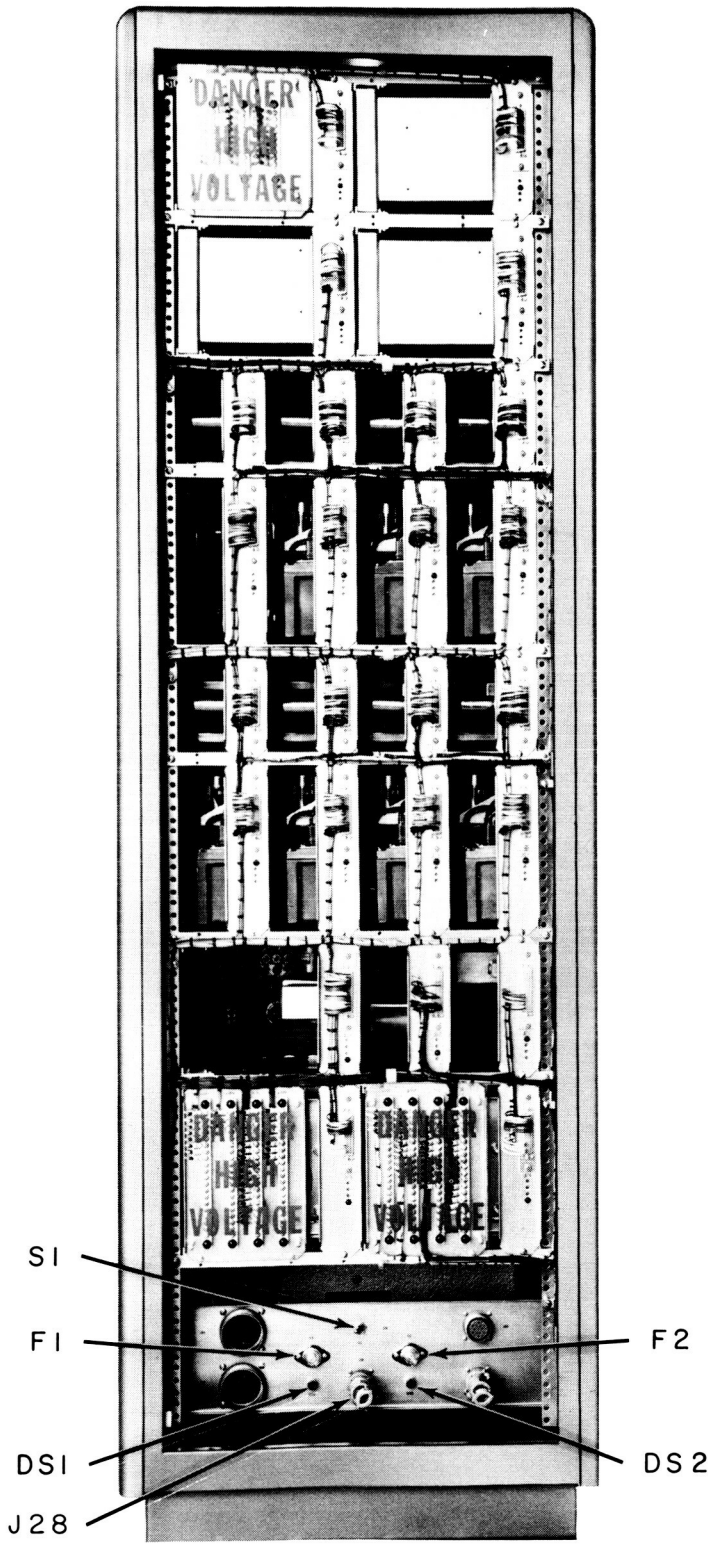

Figure 1-2. MEC Model 77 Digital to Analog Converter

1-5. OUTPUT SIGNALS

There are seven individual channels of analog voltage outputs. The output voltage excursions may swing from +35v to -35v; +35v representing a received digital signal pattern of all "1's", -35v representing a received signal pattern of all "0's". In addition, internally generated reference voltages of +35v and -35v are provided as outputs to furnish reference voltages to associated analog equipment, if required.

CHAPTER II
THEORY OF OPERATION

2-1. GENERAL (Figure 7-1)

Digital data is applied to the D-A Converter via connectors J29 and J30 located at the rear of the base of the Converter Rack. Since all seven channels operate in a similar manner, only Channel #1 will be described.

2-1.1. The ten inputs for a given channel are inserted in parallel, the "1"-"0" digital signal pattern being determined by the associated digital equipment. The input signals are conducted via rack wiring to the Data Summing Chassis corresponding to the given channel. The Data Summing mercury-wetted relays are energized by the "1's" (-17v levels) and are de-energized by the "0's" (Ov levels). When the relays are in the "0" state, certain contacts of the relays shunt the binary weighted precision resistors in the feedback loop of the given channel's A DC amplifier, thereby providing a means for varying the gain of the DC amplifier. The output of the A amplifier (amplifier #1 in analog channel #1) is applied to the resistor network consisting of R512, R513, R514, and amplifier B (amplifier #2 in analog channel #1). The output of amplifier #2 now corresponds to the desired analog voltage associated with the "1"-"0" pattern received by the Converter. Approximately 1 millisecond before a new data word is sent, a signal of approximately 5 milliseconds duration (referred to as the "Read In" signal), energizes the "holding" relay, K501, which disconnects the input to amplifier #2. The output voltage of amplifier #2 is not permitted to change, but is held to its previous output by the .5μf capacitor C502, which is connected across the amplifier. Within 5 milliseconds that the input to amplifier #2 is disconnected, new digital data is inserted and a new "1"-"0" pattern is set up in the relays. Because of the relay drop-out and pull-in time delay, it is necessary that the holding relay keep the input to amplifier #2 disconnected long enough for the relays to go to the new "1"-"0" pattern and stabilize before reconnecting the input to amplifier #2. Because the gain of amplifier #1 is a function of the number of resistors in its feedback loop, rather large output excursions of amplifier #2 could occur if one of the relays shunting a large binary resistor in amplifier #1's feedback loop is in a transient state at the time the input to amplifier #2 is reconnected. A more detailed description of the operation of the digital to analog conversion process is found in section 2-2.

2-1.2. In the left center portion of Figure 7-1, is the a-c power switching circuitry. 120vac phase 1 is applied to pin A of the a-c connector J28, 120vac phase 2 to pin E, and the 120vac common to pin B. If desired, this equipment can be operated from single phase by connecting pins A and E together to the "hot" side of the a-c input line. For the protection

of maintenance personnel, a-c power may be switched off by power switch S1, located at the lower rear portion of the rack. Fuses F1 and F2, also located at the lower rear portion of rack, protect the rack cabling. Indicators DS1 and DS2, located at the lower rear portion of the rack, indicate the presence of phase 1 and phase 2 a-c line voltages as a warning to personnel. The STANDBY and POWER switches, located on the Control Chassis are intended for manual control of a-c power. The STANDBY switch, S604, energizes the filament transformers located in the +250v and -250v Power Supplies and activates the rack Blower. The POWER switch S605, energizes the high voltage transformers located in the +250v and -250v Power Supplies and the power transformers located in the Transistor Power Supplies.

2-1.3. Power Supply voltages are monitored by meter M401, located in the Monitor Chassis. In the lower right portion of Figure 7-1 is meter M402 of the Monitor Chassis which monitors the seven analog output voltages in addition to the analog reference voltages. The remaining circuitry in Figure 7-1 consists of the analog internal reference voltage circuitry, and the power supply and reference supply failure detection circuits. These circuits will be explained in detail in the description of the respective chassis.

2-2. D-A CONVERSION

A simplified Block Diagram of the D-A Conversion System of channel #1 of the D-A Converter is illustrated in Figure 2-1. All items illustrated in this figure are contained in the portion of the rack associated with the channel #1 DC Amplifier Chassis and channel #1 Data Summing Chassis. The two d-c amplifiers, labeled A and B in Figure 2-1 correspond to the amplifiers labeled 1 and 2 in the channel #1 DC Amplifier illustrated in the upper left portion of Figure 7-1. Directly beneath each DC Amplifier Chassis in the rack is a Data Summing Chassis which contains all other circuitry appearing in Figure 2-1.

2-2.1. Associated with amplifier A is an input resistor R501, (denoted R_i) and 10 binary weighted feedback resistors, R502 through R511, (denoted R_b). Across each individual binary weighted resistor is an individual relay contact associated with the relays. Shown above each relay in Figure 2-1 is a designation corresponding to the binary weight of each feedback resistor. The smallest resistor (R511) corresponds to a binary weight of 1, while the largest (R502) corresponds to a binary weight of 512.

2-2.2. The output voltage, E_A, of amplifier A may be calculated from the following formula:

$$E_A = -E_R \frac{R_b}{R_i} \text{ volts}$$

This formula states that the output voltage of a DC amplifier is equal to the negative of the input voltage times the ratio of the feedback resistance to the input resistance. Relays K502 through K511 may be activated in such a way that the feedback resistance can vary between 0 Ω and 12,487.75 Ω in 12.2 Ω steps, resulting in output voltage changes between 0v and -34.9658v in 34.2 millivolt increments at the output of amplifier A. This 34.2 millivolt figure may be obtained by substituting in the preceding formula the values of E_R, R_b and R_i in the following manner:

$$E_A = -35 \times \frac{12.2}{12,500} = -.0342 \text{ volts or } -34.2 \text{ millivolts}$$

R_b (feedback resistance) is only the value of resistor R511 in this particular case.

2-2.3. Table 2-1 contains several representative analog outputs corresponding to various relay closures in the feedback circuit of amplifier A. From this table, it can be seen that when all relay contacts are opened, the total binary weight is 1023 and the output voltage E_A at this time is -34.9658v. If only the contacts of relay K502 are opened, the binary weight is 512, and the output of the amplifier is -17.5v. To obtain a binary weight of 1 bit less, i.e., 511, relay K502 should be closed and relays K503 through K511 should be opened. Voltage E_A now changes from -17.5v to -17.4658v (a difference of 34.2 millivolts). If all relay contacts are closed, all feedback resistance is shorted out and the output voltage E_A becomes 0v. With only relay K511 open, the smallest bit is inserted into the system and the output voltage of amplifier A becomes -.0342v.

TOTAL BINARY WEIGHT	OPEN RELAY CONTACTS	INDICATORS ON	R_b	E_A	E_B
1023	All	All	12,487.75Ω	-34.9658v	+34.9658v
511	K503-K511	256, 128, 64, 32, 16, 8, 4, 2, 1	6,237.8Ω	-17.4658v	- .0342v
512	K502	512	6,250Ω	-17.5v	+ .0342v
449	K503-K505, K511	256, 128, 64, 1	5,480.95Ω	-15.3467v	- 4.2724v
448	K503-K505	256, 128, 64	5,468.75Ω	-15.3125v	- 4.3408v
0	None	None	0Ω	0v	-34.9658v
1	K511	1	12.2Ω	- .0342v	-34.9316v

Table 2-1. D-A Conversion

2-2.4. It is obvious that any binary weight between 0 and 1023 can be obtained by combinations of the various relay closures. For example, if a binary weight corresponding to 448 is desired, it may be obtained by opening relays K503, K504 and K505, which results in a feedback resistance of 5468.75Ω and the output voltage of amplifier A becomes -15.3125v, as illustrated in Table 2-1. If the next higher bit, 449, is desired, relays K503, K504, K505, and K511 should be opened. The feedback resistance will now be 12.2Ω greater (5,480.95Ω) and the output voltage will be .0342v greater (-15.3467v).

2-2.5. In addition to the previously described components of the D-A Conversion System are the holding relay K501 and the B amplifier with its associated input and feedback components.

2-2.6. The holding relay K501 is a mercury-wetted, polarized, high speed relay used to disconnect the input to the B amplifier during the time the digital pattern is changing. The holding relay signal is triggered by the arrival of the read-in pulse (approximately 5 millisecond duration) which energizes the holding relay; the holding relay then opens the input to the B amplifier. The B amplifier output is prevented from decaying to 0v by the .5μf capacitor C502, which holds the output to approximately the same voltage established by the feedback resistor pattern from the previous frame. The new data signal pattern is applied in parallel to the ten channel #1 inputs via pins 1 through E on digital connector J29. After the relays have repositioned, and have set up a new "1"-"0" feedback resistor pattern (approximately 1 millisecond) the holding relay signal ends, de-energizing the holding relay and reconnecting the input to the B amplifier.

2-2.7. The output of the B amplifier is derived from the following equation:

$$E_B = -E_A \frac{R513}{R512} - E_R \frac{R513}{R514} = -E_A \frac{100,000}{50,000} - 35 \frac{100,000}{100,097.7} \text{ volts}$$

$$E_B = -(2E_A + 34.9658) \text{ volts}$$

2-2.8. Examples of D-A Conversion.

Example A: Assume a signal pattern consisting of all "1's" is received by the Converter in channel #1. Relays K502 through K511 are energized and R_b consists of the series equivalent of resistors R502 through R511.

The output of amplifier A is derived by:

$$E_A = -E_R \frac{R_b}{R_i} \text{ volts}$$

$$E_A = -35 \frac{12,487.75}{12,500} \text{ volts}$$

$$E_A = -34.9658 \text{ volts}$$

The output of the amplifier B is derived by:

$$E_B = -\left[2 E_A + E_R \frac{R513}{R514}\right] \text{ volts}$$

$$E_B = -[2(-34.9658) + 34.9658] \text{ volts}$$

$$E_B = +34.9658 \text{ volts}$$

Therefore, for a signal input pattern consisting of all "1's", the output of analog channel #1 is +34.9658v, which is within the specified system accuracy of 68.4 millivolts (±1 binary bit).

Example B: Assume a signal pattern of all "0's" is received by the Converter in channel #1. Relays K502 through K511 remain closed and R_b is equal to 0Ω. The output of the A amplifier is therefore:

$$E_A = -35 \times \frac{0}{12,500} \text{ volts}$$

$$E_A = 0 \text{ volts}$$

The output of the B amplifier is:

$$E_B = -(0 + 34.9658) \text{ volts}$$

$$E_B = -34.9658 \text{ volts}$$

Therefore, for a signal input pattern of all "0's", the output of analog channel #1 is -34.9658v. For further comparison of E_A and E_B versus data inputs, see Table 2-1.

2-2.9. Visual indication of the energized Data Summing relays is provided by means of neon lamps mounted on the front panel of each Data Summing Chassis. The column titled "Indicators On" of Table 2-1 pertains to these neon lamps.

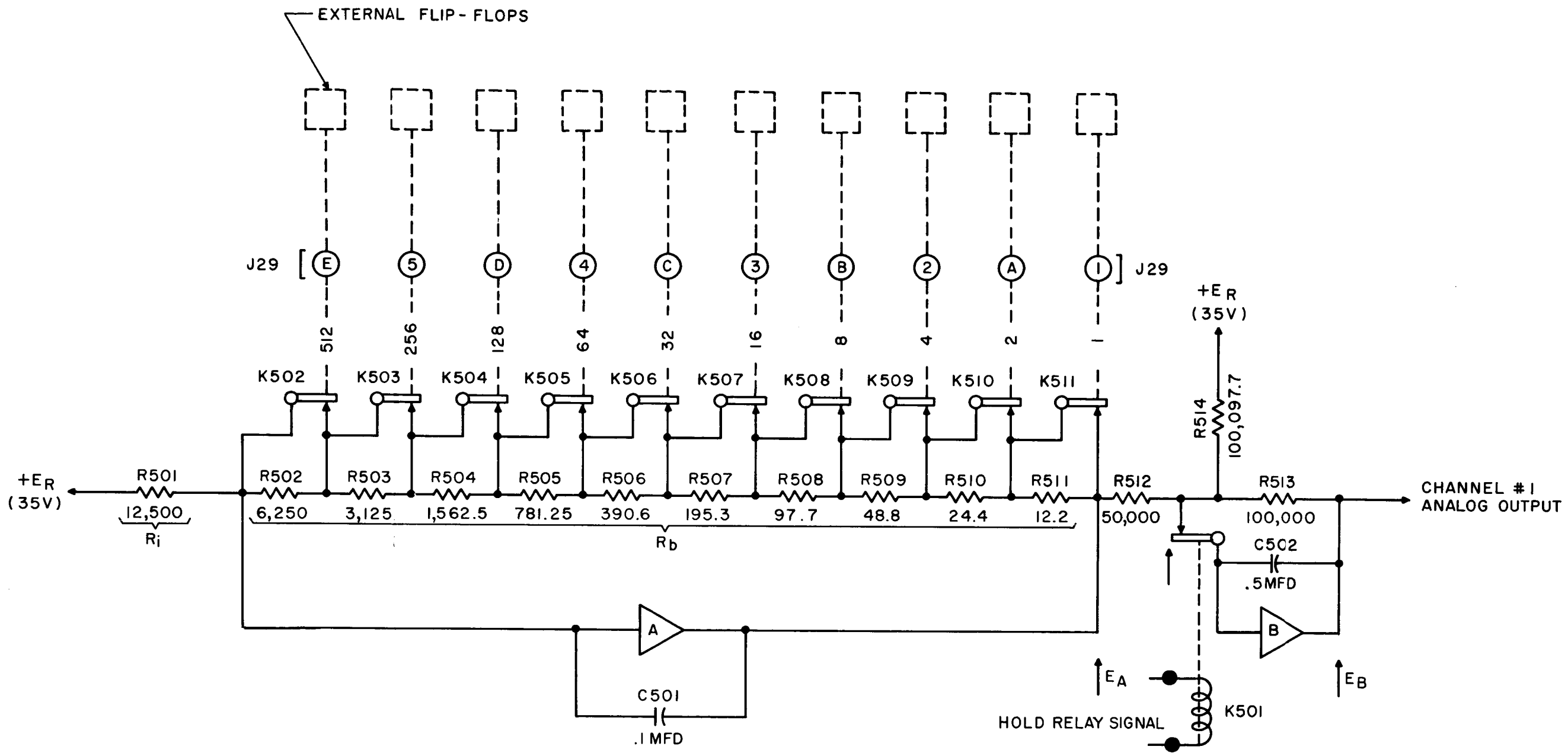

$$E_A = -E_R \frac{R_b}{R_i} \text{ VOLTS}$$

$$E_B = -(2\,E_A + 34.9658) \text{ VOLTS}$$

Figure 2-1. Digital to Analog Conversion

2-3. CONTROL CHASSIS, MEC MODEL 77-6A (Figures 7-2 and 7-3)

2-3.1. General - The Control Chassis contains the necessary meter-relays and power supply detection circuitry to effect switch-over from the operational to the standby Power Supplies in the event of power failure in the +250v, -250v, +12v or -20v Power Supplies. The -250v, -560v, and the -85v Supplies need not be monitored. A failure in the -250v, -560v Supply will reflect into the +250v Supply as described in the description of the Power Supplies in the Appendix, and the -85v Supply is used for the indicator lamps only and therefore, is not critical. The Control Chassis also possesses the necessary circuitry to produce the hold relay signal which places the hold relays in the Data Summing Chassis in the hold condition during read out. On the front panel of the Control Chassis are located three meter-relays with respective RESET pushbutton switches, STANDBY and POWER toggle switches and two test jacks, one labeled HOLD TRIGGER, the other labeled HOLD SIGNAL. A red indicator labeled POWER FAILURE indicates the occurrence of Power Supply failure.

2-3.2. +250v Detection Circuitry - Meter-relay M601 monitors the "A" (operational) +250v Power Supply and should read 100% when the +250v Power Supply is adjusted to exactly +250v. The adjustable detection arms on meter-relay M601 should be set to approximately 95% and 105%, allowing the ±5% deviation before switch-over to the standby supply occurs. If the +250v "A" Supply deviates from its predetermined limits, meter-relay M601 energizes mercury-wetted relay K601. The normally open contacts 1 and 3 of K601 now close and energize relays K602 and K603. The contacts of K602 and K603 transfer the +250v, -250v, and -560v rack power buses from the "A" Supplies to the "B" Supplies. Normally open

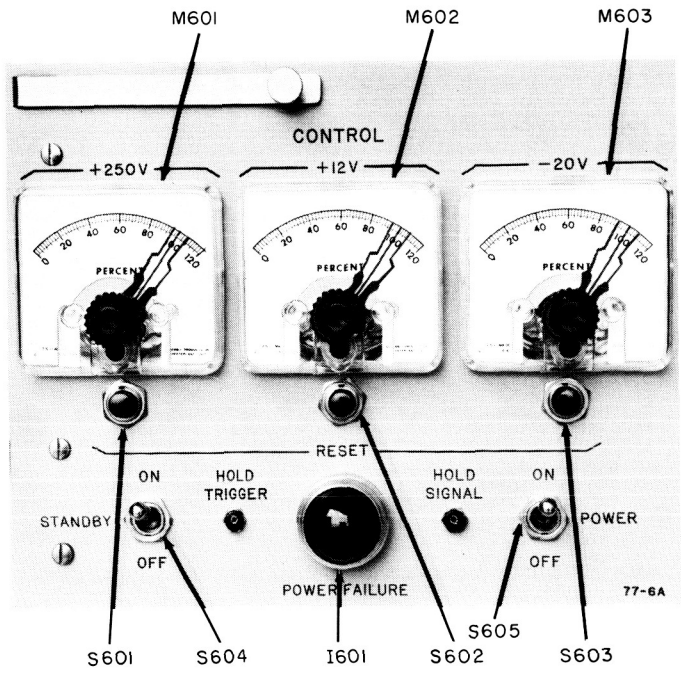

Figure 2-2 Control Chassis

contacts 4 and 5 of relay K603 close and apply -20v across indicator I601 causing it to light. Although only the +250v Supply is monitored directly, the +250v, -250v and -560v Supplies are referenced together so the +250v Supply will reflect changes in the -250v or -560v Supplies. Since the meter-relay possesses an internal holding coil, once the meter-relay contacts have been closed they will remain closed until the reset button is operated even if the +250v Supply should return to its proper level. If the RESET pushbutton, S601 is depressed, relays K601, K602 and K603 will drop out and the "A" Power Supplies will once again be connected to the power buses. If the "A" +250v Supply is within limits, the "A" Supplies will continue to supply the buses when the RESET pushbutton is released. If the +250v "A" Supply deviates from its limits, K601, K602 and K603 will be energized when S601 is released, causing the "B" Power Supplies to supply the rack power buses. If the switch-over from the "A" Supply to the "B" Supply should occur during a "mission," do not attempt to revert back to the "A" Supply until completion of the mission. CR601 and CR602 are used to suppress any noise spikes which might be generated as the relays are de-energized.

2-3.3. +12v Detection Circuitry - If the +12v "A" deviates from its limits, meter-relay M602 applies a positive voltage to pin 2 of transistor network N601A (see the Appendix for the theory of operation of N601A which is MEC Model TN-58). Pin 2 is the base of an NPN emitter, follower transistor which saturates and causes the emitter, pin 3 to become approximately 0v. Relay K604 is energized, transferring the ±12v to the rack from the rack power bus in the +12v "A" Supply to the +12v "B" Supply closing contacts 4 and 5 of K604 and lighting indicator I601. The RESET pushbutton, S602, operates in the same manner as S601 which was previously described. Meter M602 should be adjusted to the same limits as was M601.

2-3.4. -20v Detection Circuitry - Transistor network N601B (MEC Model TN58) contains an NPN transistor corrected as an amplifier. If -20v "A" deviates from its limits, meter M603 raises the base, pin 7 of N601B, toward 0v saturating N601B and pulling pin 5 of N601B to approximately -19v. The PNP amplifier in N602B (MEC Model TN46) is now saturated by its base current through resistor R615, causing the base, pin 8 of N602B to be brought to approximately -1v, thereby energizing relay K605 and indicator I601. The contacts of K605 transfer the -20v and -85v rack power buses from the "A" Supplies to the "B" Supplies. Diodes CR608 and CR607 are used to generate a small voltage suitable for reverse biasing of N601B and N602B in the normal condition. Diode CR605 is used to isolate relay K605 from indicator I601 so the indicator can be operated by the contacts of K603 or K604 without operating K605.

2-3.5. Hold Relay Circuitry - The -17v, 5 millisecond hold relay trigger pulse enters the Control Chassis on pin 32 of connector P601 and is coupled via resistor R613 to the base, pin 2 of N602 (MEC Model TN46). The emitter, pin 3 of N602 is pulled down and the resultant negative pulse is coupled via resistor R614 to the base of power transistor Q601. Q601 conducts the emitter drops to approximately -17v and the resultant pulse is coupled via rack wiring to the seven Data Summing hold relays.

2-3.6. The remaining circuitry in the Control Chassis consists of the STANDBY and POWER switches. Switches S604 and S605 may be utilized when the a-c power switch, S1, (located at the lower rear of the Converter rack) is in the ON position. The STANDBY switch, S604, must be turned on before the POWER switch in order to allow the DC Amplifier tube filaments to heat. At least 60 seconds should be allowed after the STANDBY switch has been turned on before the POWER switch is thrown.

2-4. DATA SUMMING CHASSIS, MEC MODEL 77-5A (Figures 7-4 and 7-5)

2-4.1. General - The components of the Data Summing Chassis are suitably packaged to facilitate easy plug-in to a mating assembly located in the Rack. Resistors R501 through R514 are mounted in a sealed, silicon oil filled, aluminum casting located in the chassis as illustrated in Figure 2-3.

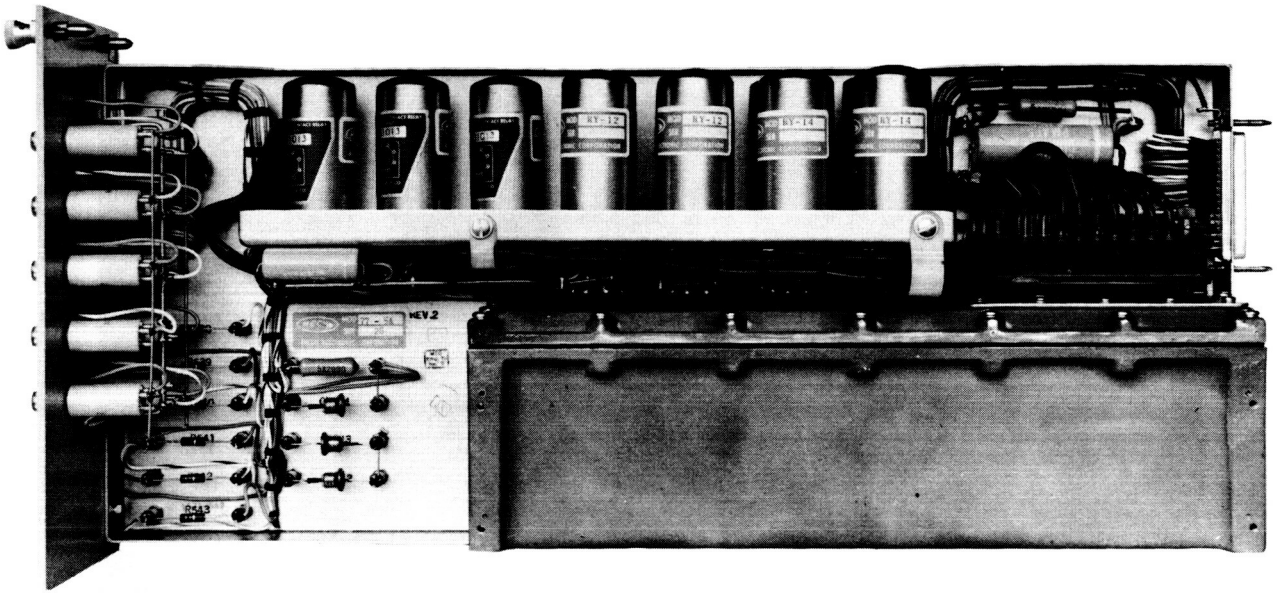

Figure 2-3. Data Summing Chassis, Side View

Connections to circuitry located within this container are made through a silicon rubber connector in the upper section of the container. The casting may be opened for servicing, if necessary. Should any difficulty with the networks arise, other than that portion associated with the feedback of amplifier B, the units should be returned to the manufacturer for repair. DO NOT ATTEMPT FIELD REPAIRS. Eleven mercury-wetted relays, K501 through K511 are located on a bracket directly above the oil filled container. Polarized mercury-wetted relays have been utilized to insure long contact life and to minimize operation and release times. On the front panel of the Data Summing Chassis are 10 indicator lamps which are labeled in accordance with the binary weight they represent in the circuit, that is, between 1 and 512. Since all relays in this unit operate in a similar manner, the following discussion will be concerned only with relay K511 and its associated circuitry.

2-4.2. Detailed Theory - If a "1", or -17v significant data level is received at terminal 17 of connector P501, current flows from the 0v bus through the coil of relay K511 (from pin 8 to pin 7), through resistor R537 and diode CR525 to the -17v source. This current energizes relay K511 placing resistor R511 in the feedback loop of DC amplifier A. Resistors R502 through R510 are shorted out by the wipers of relays K502 through K510. When the input level returns from -17v to 0v, terminal 7 is pulled up toward +12v by the reverse biasing effect

of resistor R526, and current is caused to flow from the +12v supply through resistor R526 and the coil of relay K511 in the opposite direction than before. The drop out time of the relay is greatly reduced by forcing current back through the relay coil as the relay is being de-energized. Indicators DS501 through DS510 employ internal transistor circuitry to drive the individual neon lamps. Pin 2 of each lamp is returned to -85v and pin 3 to -2v (-2v is generated by utilizing the forward voltage drops of three silicon diodes). A voltage of -4v to -8v is required to operate the indicators, therefore a "1" or -17v level received at pin 17 will energize indicator DS 510. A complete description of the utilization of the binary weighted resistors and their relationships to the DC amplifiers was discussed in Section 2-2, D-A Conversion.

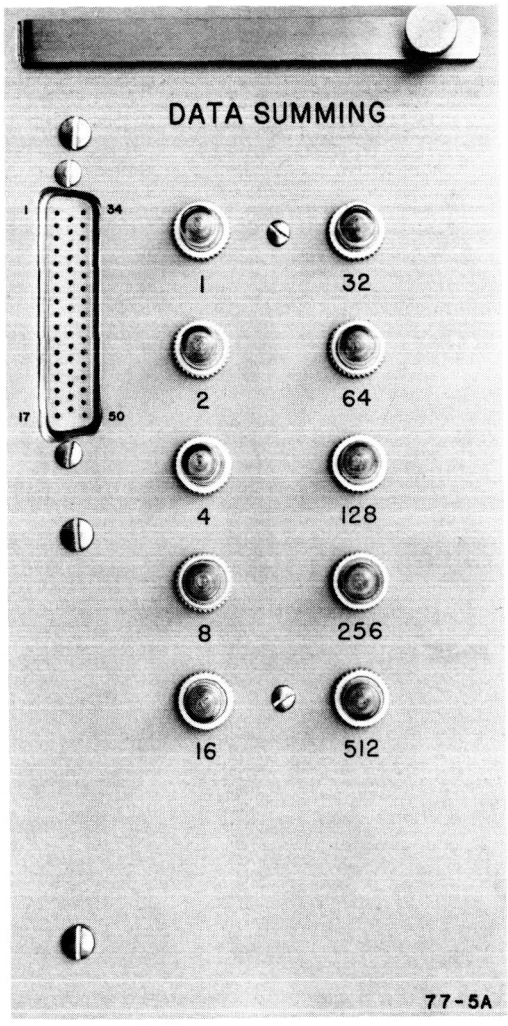

Figure 2-4 Data Summing Chassis

2-5. MONITOR CHASSIS, MEC MODEL 77-4A (Figure 7-6 and 7-7)

The Monitor Chassis provides a means of monitoring all operating voltages in the D-A Converter. Located on the front panel of the Monitor Chassis are two meters and three selector switches. The top meter M401, with selector switch S402, provides a means of monitoring the a-c phase 1 and phase 2 line voltages. The chopper drive voltage may also be read on this meter. When S402 is in the POWER position, the operational and standby Power Supply voltages for -560v, +250v, -250v, -85v, -20v and +12v may be selected by switch S401 and read on meter M401. Meter M401 is graduated from 0 to 12 and the multiplying resistors in series with this meter are so apportioned that the voltages should read exactly 10 when adjusted to their correct values. When the power supply voltages are not being monitored, switch S402 should be placed in the OFF position to protect the meter in the event of failure in the regulating portion of the Power Supply. The second meter, M402, is used in conjunction with the ANALOG OUTPUTS switch S403 and monitors the seven analog outputs and the plus and minus reference voltages. Meter M402 is a center zero meter graduated from -40v to 0 at the center and to +40v at the extreme right. The analog outputs in channels 1-7 may vary between the limits of -35v and +35v depending upon the data being received by the Converter. The minus reference and plus reference voltages, however, should read exactly -35v and +35v respectively. Because the circuitry involved in the Monitor Chassis is of such an elementary nature, a detailed description is not given.

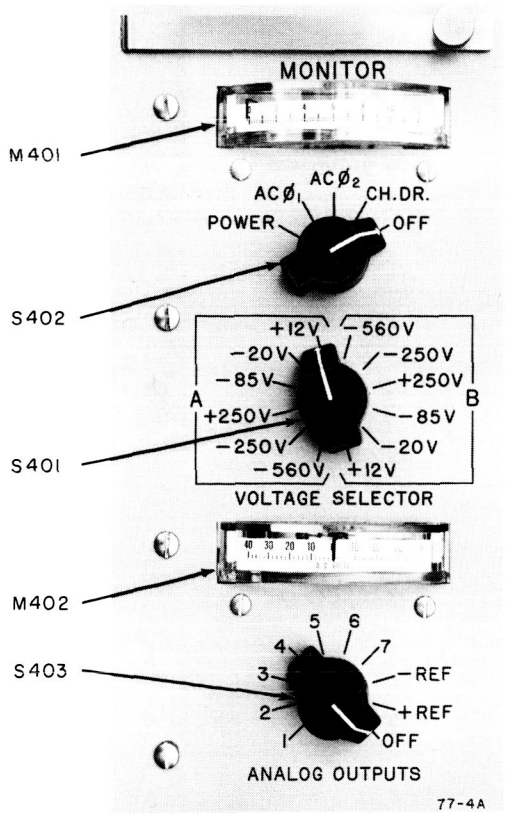

Figure 2-5 Monitor Chassis

2-6. EXTERNAL-INTERNAL REFERENCE VOLTAGE SYSTEM (Figure 2-6 and 2-7)

2-6.1. The D-A Converter contains its own internal reference voltage supply system. This reference supply system generates +35v and -35v for use within the D-A Converter and other equipment that may be operated in conjunction with it. The generation of the +35v and -35v by the Converter is accomplished either from an internal standard cell or from an external reference input of +35v to which the Converter is to be slaved. The circuitry for generating the plus and minus reference voltages is illustrated in the lower right portion of Figure 7-1 and is further diagrammatically illustrated in Figure 2-7.

2-6.2. The method by which the reference voltage is generated is determined by the position of the reference voltage switch S1002 on the front panel of the Reference Chassis. When switch S1002 is placed in the INT (internal) position, the reference voltage output is generated from a standard cell located within the Reference Chassis. If the reference switch is placed in the EXT (external) position and a +35v external reference input is connected to terminal A of plug J27 in the lower rear of the Converter Rack, the internal -35v and +35v reference voltages will be slaved to the external +35v input reference voltage. By slaving, it is meant that as the external reference voltage varies in magnitude, the internal reference voltage generated within the Converter will faithfully follow the variation. When several pieces of computing equipment are to be utilized together, the slaving of reference voltages is exceedingly important since the Converter, as well as other units associated with it, produce d-c outputs that are based upon ratios of the reference voltage. If each individual piece of equipment contains its own reference system and these reference systems vary even slightly, errors will result in the outputs of one system relative to the other, thereby creating overall system errors. If, however, the reference supplies of each of the various systems faithfully follow one another, each signal output is then a voltage ratio which is, in fact, proportional to those obtained in the other systems, thereby eliminating this source of errors. It is, therefore, important that other elements be slaved against the Converter or that the Converter be slaved against the remaining portion of the overall system.

2-6.3. If the external-internal reference switch S1002 is in the EXT position, amplifiers #7 and #8 of the Reference Chassis are electrically connected as illustrated in the upper portion of Figure 2-7. Placing switch S1002 in the INT position results in the electrical connection illustrated in the lower portion of Figure 2-7. With reference switch S1002 in the EXT position and amplifiers #7 and #8 connected as indicated in the upper portion of Figure 2-7 amplifier #7 will contain equal input and feedback resistors of 100,000Ω. Amplifier #7, therefore, acts as a phase inverting amplifier faithfully reproducing the negative complement of the voltage applied to its input. Since the input to amplifier #7 is, in this case, the +35v external reference input voltage, the output of amplifier #7 will be -35v. Amplifier #8 also contains equal input and feedback resistors of 100,000Ω, thereby also acting as a phase inverting amplifier. Since the input to amplifier #8 is the -35v output of amplifier #7, the resultant output of amplifier #8 is +35v.

2-6.4. When switch S1002 is placed in the INT position, relay K1001 is energized, resulting in the configuration illustrated in the lower portion of Figure 2-7 and the -35v and +35v reference voltage outputs are generated from the standard cell labeled SC1001. The standard cell utilized in the Converter supplies an emf of 1.01923v (nominal) across its output terminals. In order to obtain an output voltage of +35v, the output voltage of the standard cell must be multiplied by approximately 34.34. This multiplication is performed by DC amplifier #7 without drawing current from the standard cell.

2-6.5. To understand the operation of DC amplifier #7 when connected as illustrated in the lower portion of Figure 2-7, first assume the output voltage of DC amplifier #7 to be -35v as illustrated. This being the case, the 100,000Ω feedback resistor R1 and the 2999.4Ω resistor R5 associated with amplifier #7 are effectively in series between the -35v output and high quality ground. With -35v applied across this series resistor string, the voltage between the junction of these two resistors and ground is $-35 \frac{2,999.4}{102,999.4}$ or -1.01923v. The input terminal of this amplifier must be at ground potential in order for DC amplifier #7 to operate as a closed loop feedback amplifier. The standard cell SC1001 (1.01923v) is connected between the juncture of these two resistors (-1.01923v) and the input to DC amplifier #7 in such a manner as to cancel out the -1.01923v. The resultant voltage on the input of DC amplifier #7 will, therefore, be 0v only when the output voltage is precisely -35v. Should the -35v either tend to increase or decrease, the condition for stability will not be maintained and the DC amplifier will force the output voltage back to -35v. DC amplifier #8 is connected in precisely the same manner as previously connected for external reference input to provide the +35v reference output voltage.

2.7. REFERENCE CHASSIS, MEC MODEL 77-10A (Figures 2-7, 7-8 and 7-9)

2-7.1. The Reference Chassis contains the necessary circuitry to generate the D-A Converter's analog reference voltages. Mounted on the chassis is a standard cell, SC1001, used to produce the internal reference voltages; a resistor network, N1001, which houses the precision resistors used in the reference circuitry; a relay, K1001; and a transistor network, N1002, used in the reference failure detection circuitry. N1002 is MEC Model TN57 which is explained in detail in the Appendix. On the front panel is a meter-relay, M1001, used in detecting reference voltage deviation; and indicator I1001, labeled REFERENCE FAILURE, which is energized in the event failure of the +35v reference voltage; a RESET pushbutton S1001 which, when depressed, resets the detection circuitry, and a toggle switch S1002 labeled EXT and INT allowing for manual selection of reference voltages.

2-7.2. With the +35v external reference voltage applied to pin 40 on connector P1001 (via rack wiring), and with switch S1002 in the EXT position, the +35v external reference voltage is impressed on resistor R1004 and the movement of meter relay M1001. Since M1001 contains a holding coil, it is necessary to depress the RESET pushbutton S1001 in order to meter the external reference voltage after turning the equipment on. With M1001 in its 100% position, relay K1001 is de-energized and the circuit in the upper portion of Figure 2-7

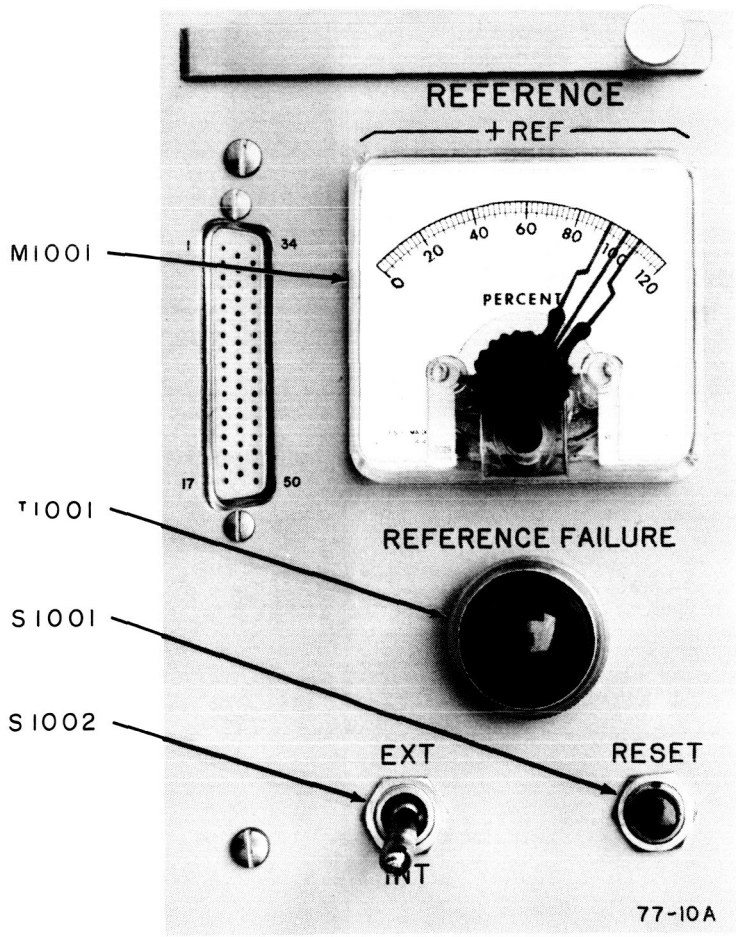

Figure 2-6. Reference Chassis

results. Meter-relay M1001 is equipped with two adjustments for high and low voltage detection, and is designed to read exactly 100% for an external reference voltage of exactly +35v. It is recommended that M1001 be set with the low detection arm at approximately 95%, the high detection arm at about 105%. In the event the -35v external reference fails or is otherwise removed, the pointer of M1001 will come in contact with one of the detection arms and M1001 will internally conduct current through R1001, S1001, and its own holding coils to pin 2 of transistor network N1002A (TN57). N1002A is externally connected as an emitter follower for current gain while transistor network N1002B is connected as a conventional PNP transistor amplifier. Pin 2 (TN57) now drops to approximately -20v and the emitter, pin 3 of N1002A is also pulled down to approximately -12v. Base current from the transistor in N1002B now flows through resistor R1003, causing the transistor to saturate. The collector, pin 5 of N1002B, goes to approximately -1v causing relay K1001 to energize and indicator I1001 to light. The contacts of relay K1001 reconnect the input to amplifier #7 and the internal reference circuit illustrated at the bottom of Figure 2-7 is established, enabling the output of amplifier #7 to be maintained at -35v by the standard cell, regardless of the change in the external reference voltage. If the +35v external reference voltage is re-established, the RESET pushbutton should be depressed to cut off the transistor inside N1002A, which in turn cuts off N1002B causing pin 5 of N1002B to return to -20v, de-energizing relay K1001, extinguishing indicator I1001, and reconnecting the input of amplifier #7 to the external reference voltage as illustrated at the top of Figure 2-7.

2-7.3. Should it become desirable to operate the Converter in the internal reference mode, switch S1002 should be placed in the INT position. Pin 5 of switch S1002B is now connected directly to 0v which energizes relay K1001. Meter M1001 now senses the +35v internally generated reference voltage through contacts 1 and 2 of switch S1002A, and may now be used only to monitor the internal +35v reference voltage, as relay K1001 is always energized in the internal reference mode. Should the internal reference fail due to a faulty cell or amplifier, the meter contacts will again drive through N1002A causing N1002B to saturate which now merely activates indicator I1001, indicating that the internal reference voltages are out of limits. It may become necessary, due to the magnetic holding coils inside M1001, to depress the RESET pushbutton after applying power to the Converter, or after manual switching of S1002.

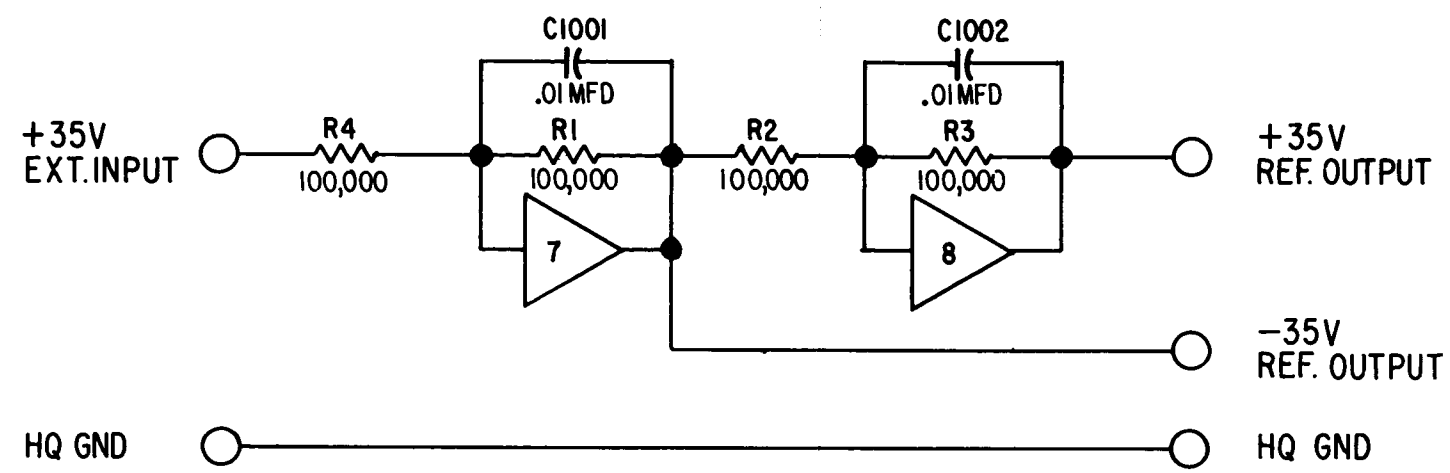

REFERENCE VOLTAGE SLAVED EXTERNALLY

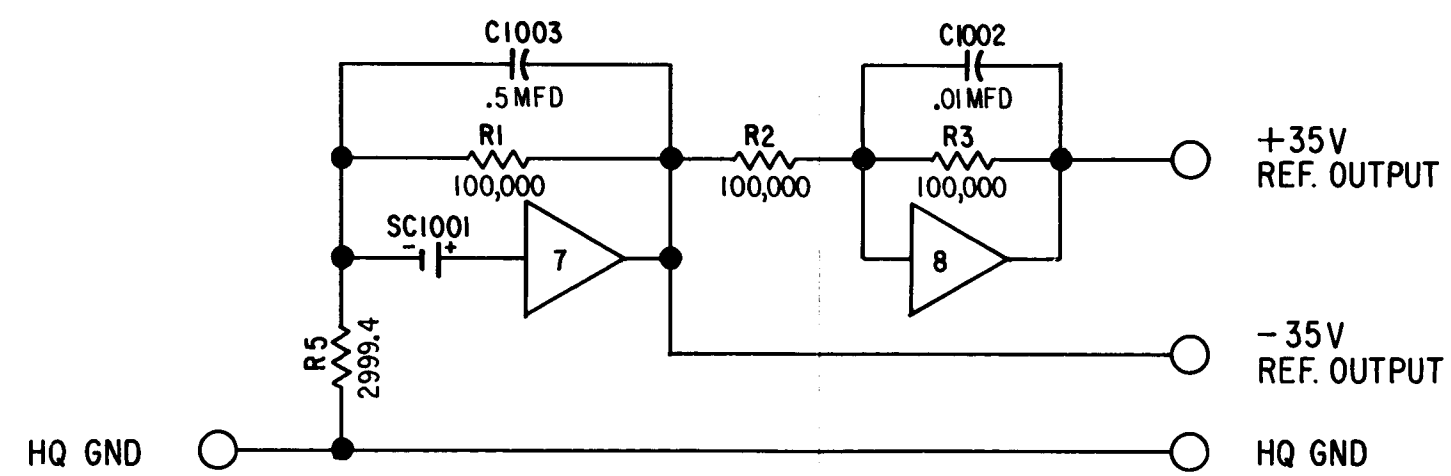

REFERENCE VOLTAGE GENERATED INTERNALLY

Figure 2-7. Block Diagram, Reference Chassis Circuits

2-8. DC AMPLIFIER CHASSIS, MEC MODEL 63-4C (Figures 7-10, 7-11 and 7-12)

2-8.1. The DC Amplifier Chassis is a dual package containing two identical direct coupled DC amplifiers. Each DC amplifier contains a separate stabilizer portion to insure low DC drift. For correct operation, the DC amplifier unit must be supplied with the following d-c and a-c signals:

a. +250v *
b. -250v *
c. -560v (.88 milliamperes)
d. 12.6vac at -125v reference (1.05 amperes)
e. 12.6v at ground (.6 amperes)

All amplifier computing networks must be supplied externally to the amplifiers. These computing networks are usually located in sealed containers in other elements of the overall equipment rack.

2-8.2. Before proceeding with a detailed explanation of the DC Amplifier Chassis, a general theory of DC amplifier operation will be briefly covered to illustrate various computing circuit logic as well as the method of stabilization against drift.

2-8.3. Figure 2-9 illustrates the amplifier connected as a summing amplifier. Assuming that the gain of the amplifier ($-\mu$) is very large (approaching infinity), it follows that the input voltage "e" ($e = -\frac{E_o}{\mu}$) approaches 0 and the following equation may be written:

$$I_1 + I_2 = I_o$$

$$\text{Where } I_1 = \frac{E_1 - e}{R_1} \text{ or } \frac{E_1}{R_1} \text{ since } e = 0 \qquad (1)$$

$$I_2 = \frac{E_2 - e}{R_2} \text{ or } \frac{E_2}{R_2}$$

$$I_o = \frac{-E_o - e}{R_o} \text{ or } \frac{-E_o}{R_o}$$

$$\frac{E_1}{R_1} + \frac{E_2}{R_2} = \frac{-E_o}{R_o} \qquad (2)$$

* Current drawn from the +250 and -250v Supplies depends upon the load into which amplifier is to be operated. The nominal value is 12.25 milliamperes.

$$E_o = \frac{-R_o}{R_1} E_1 \frac{-R_o}{R_2} E_2 \qquad (3)$$

$$E_o = -K_1 E_1 - K_2 E_2 \qquad (4)$$

Where

$$K_1 = \frac{R_o}{R_1} \text{ and } K_2 = \frac{R_o}{R_2}$$

Equation (4) indicates that the DC amplifier output voltage is proportional to the sum of the input voltages multiplied by their respective network constants. This is true for any reasonable number of inputs.

2-8.4. Figure 2-10 shows the amplifier connected as an integrating amplifier. Considering "e" to be 0 (see preceding derivation) the following relationships will be found to exist:

$$I_1 = \frac{E_1}{R_1} \qquad (1)$$

$$I_2 = \frac{E_2}{R_2} \qquad (2)$$

$$I_o = -C \frac{dE_o}{dt} \qquad (3)$$

Since

$$I_1 + I_2 = I_o \qquad (4)$$

$$\frac{E_1}{R_1} + \frac{E_2}{R_2} = -C\frac{dE_o}{dt} \qquad (5)$$

$$-CE_o = \int_o^t \frac{E_1}{R_1} dt + \int_o^t \frac{E_2}{R_2} dt \qquad (6)$$

$$E_o = -\frac{1}{R_1C}\int_o^t E_1\,dt + \frac{1}{R_2C}\int E_2\,dt \qquad (7)$$

$$E_o = -K_1\int_o^t E_1dt - K_2\int_o^t E_2dt \qquad (8)$$

Where

$$K_1 = \frac{1}{R_1C} \qquad K_2 = \frac{1}{R_2C}$$

Equation (8) indicates that the output voltage of an amplifier connected as illustrated in Figure 2-10 consists of the sum of the integrals of the various input voltages divided by their respective network constants.

2-8.5. Figure 2-11 shows the amplifier connected as a differentiating amplifier. Considering "e" to be 0 (see first derivation), the following relationships will be found to exist:

$$I_1 = -C\frac{dE_1}{dt} \qquad (1)$$

$$I_o = \frac{E_o}{R_o} \qquad (2)$$

Since

$$I_1 = I_o \qquad (3)$$

$$-C_1\frac{dE_1}{dt} = \frac{E_o}{R_o} \qquad (4)$$

$$E_o = -R_o\,C_1\frac{dE_1}{dt} \qquad (5)$$

$$E_o = -K_1\frac{dE_1}{dt} \qquad (6)$$

Where $K_1 = -R_o\,C_1$

The output of the differentiating amplifier, illustrated in Figure 2-11, is the first derivative (rate of change) of the input voltage, multiplied by a constant determined by the network.

2-8.6. Figure 2-12 shows the method by which drift stabilization is accomplished. Offset voltage "e_d" is defined as the voltage required at the input terminal of the amplifier to make its output equal zero. Offset is generally due to three main causes.

a. Drift of elements within the amplifier.

b. Grid current at the input terminal.

c. Improper grounding.

Precautions have been taken during manufacture to eliminate the latter two causes while a stabilizer of the type shown in Figure 2-12 is added to reduce the effects of the first cause.

e_d = drift referred to input (voltage that would be required at input to make output zero)

$-\mu_1$ = gain of DC portion

μ_2 = gain of DC portion associated with stabilizer

$-\mu_3$ = DC gain of stabilizer amplifier

$$E_o = -\mu_1 e_1 + \mu_2 e_2$$

$$e_j = \frac{R_1}{R_1 + R_o} E_o$$

$$e_1 = e_j - e_d = \frac{R_1}{R_1 + R_o} (E_o - e_d)$$

$$e_2 = -\mu_3 e_j = -\mu_3 \left(\frac{R_1}{R_1 + R_o}\right) E_o$$

$$E_o = -\mu_1 \left(\frac{R_1}{R_1 + R_o}\right) E_o + \mu_1 e_d - \mu_2 \mu_3 \left(\frac{R_1}{R_1 + R_o}\right) E_o$$

$$E_o = \frac{\mu_1 e_d}{1 + (\mu_1 + \mu_2 \mu_3) \left(\frac{R_1}{R_1 + R_o}\right)}$$

since $(\mu_1 + \mu_2 \mu_3) >> 1$

$$E_o = \frac{\mu_1}{\mu_1 + \mu_2 \mu_3} \left(\frac{R_1 + R_o}{R_1}\right) e_d$$

If there were no stabilizer then $\mu_3 = 0$ and

$$E_o = \left(\frac{R_1 + R_o}{R_1}\right) e_d$$

Therefore the stabilizer reduces drift by the factor $\dfrac{\mu_1}{\mu_1 + \mu_2 \mu_3}$

Assuming μ_1 and μ_2 almost equal and $\mu_2\mu_3 >> \mu_1$, drift is reduced by the factor $\frac{1}{\mu_3}$ or by a factor proportional to the DC gain of the stabilizer. It should be noted that when the stabilizer is added to an amplifier there are two DC paths between the input and output of the amplifier; one via the normal DC coupled section, and the other through the stabilizer and that portion of the DC coupled section associated with the stabilizer portion from the summing juncture. A capacitor is placed between this input stage grid and the summing juncture. The normally DC coupled section in essence then becomes capable of passing frequencies only above a minimum frequency as determined by the time constant of the input circuitry; hence this portion is no longer direct coupled. The time constant of this input circuit is so apportioned that those frequencies blocked (low frequencies down to dc) are ones capable of being passed by the stabilizer portion. In this way the amplifier is capable of operating over the full frequency range and down to dc.

2-8.7 Two indicator lamps, two screwdriver-adjustable potentiometers, two push-button switches, and two test jacks are located on the front panel. Figure 2-8 is a photograph of the 63-4A DC Amplifier chassis; whereas, the MEC Model 63-4C DC Amplifier Chassis is actually the amplifier model utilized in the MEC Model 77 D-A Converter. The front panels for both models are identical; the internal circuitry differs slightly. One lamp, potentiometer, pushbutton switch, and test jack appear on the left portion of the panel and are denoted by a letter designation A, while the other indicator, potentiometer, pushbutton, and test jack appear on the right portion of the front panel, and are denoted by a letter designation B. These controls, indicators, and test jacks are associated with the two amplifiers located within the chassis; the A amplifier being located in front and the B in the rear.

a. The output terminal of each amplifier has been brought out to the small test jacks to enable the operator to place a scope, meter or other instrument on the output of each amplifier for any test purposes desired.

b. The potentiometers allow for balancing the DC amplifiers. To balance a given DC amplifier, depress the pushbutton immediately below the balance potentiometer and adjust the potentiometer so that the neon indicator located directly above it is extinguished. Once the adjustment has been made, the pushbutton is released and the amplifier is balanced.

c. With the pushbutton released the neon indicator acts as an overload indicator for the amplifier. Whenever the amplifier reaches the end of its operational range the overload indicator will glow, indicating that the computation is no longer correct. Overload condition is usually caused by exceeding the output capabilities of the amplifier either because of excessive output voltage or excessive load.

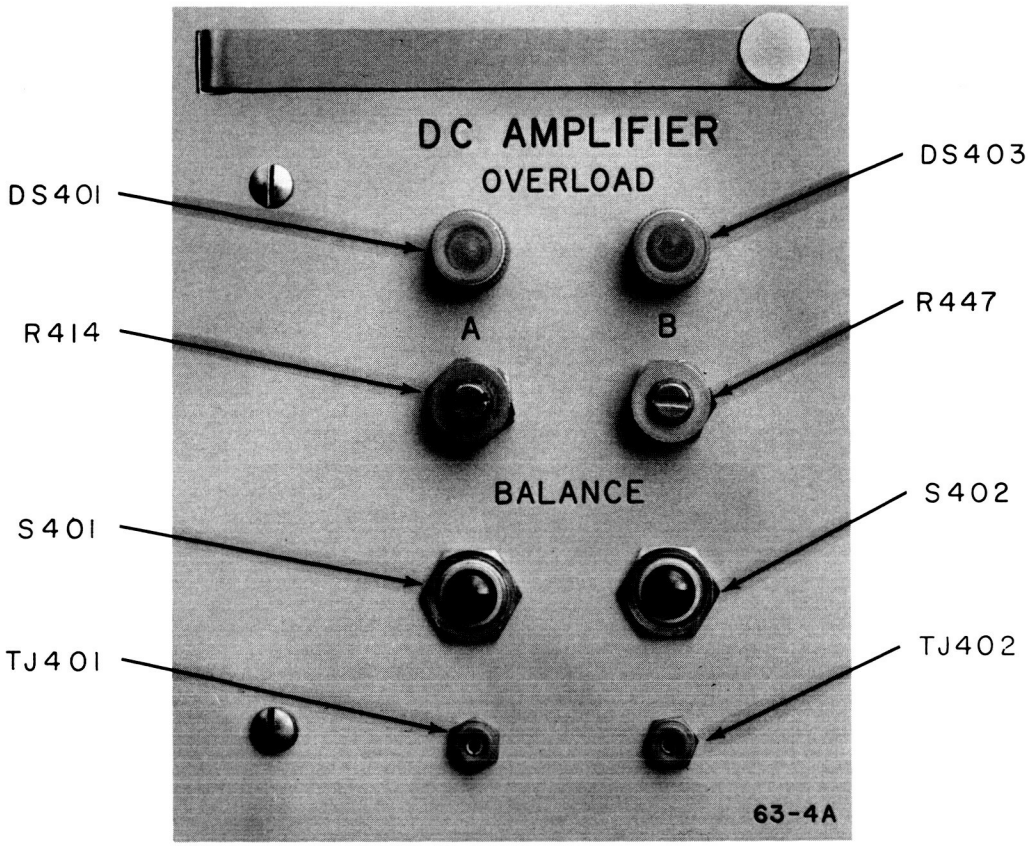

Figure 2-8. DC Amplifier Chassis

2-8.8. Figures 7-10, 7-11 and 7-12 are schematic and wiring diagrams of the DC amplifier. Note that in Figure 7-10 there appear two identical DC amplifiers. The amplifier located in the upper part of the schematic is amplifier A; that in the lower portion, amplifier B. Since A and B amplifier sections are identical, only the A section is described.

2-8.9. Amplifier A is composed of a direct-coupled amplifier and a drift compensating section. The DC, or direct coupled section, is comprised of tubes V401, V402, and V403, and associated components. The drift stabilizer portion is represented by converter K401A and tube V404, along with associated components. The junction of the external input and feedback network elements is coupled to terminal 1 through a coax cable within the rack. Terminal 1 is the input to amplifier A and is normally referred to as the summing junction. The input (error signal) from the summing junction is coupled via capacitor C402, resistor R404 and diodes CR403 and CR404 to the input grid (terminal 7) of input stage V401. Unless diode CR403 or CR404 is conducting, direct coupling between the input terminal 1 and the grid of the first amplifier tube is lost due to the coupling condenser C402. In actual operation both the amplifier grid (due to R404) and the summing junction (due to the action provided by the stabilizer loop) are operating at very near ground potential; therefore, diodes CR403 and CR404 are operating in a non-conducting region. Under these conditions condenser C402

blocks grid current that may be generated by tube V401 from the summing juncture, the grid current leading to ground through the path provided by resistor R404. Diodes CR403 and CR404 are placed in parallel with C402 in order that the voltage across C402 can be limited to within the operational range of the input grid of tube V401 during overload conditions of the DC amplifier; thus rapid recovery upon discontinuance of the overload condition is assured. The DC path required for operation of the amplifier is now obtained through the stabilizer portion and reinserted into the right-hand section of tube V401. This right-hand section is cathode coupled into the first section that is in turn directly coupled throughout the remaining DC portion to the output terminal of the amplifier. The amplified output signal appearing on the plate (pin 6) of input tube V401 is directly coupled by means of resistors R416, R415 and balance potentiometer R414 to the input grid of pentode amplifier tube V402. Under normal operational conditions the plate (pin 6) of V401 is operating at approximately +60v with respect to ground. The divider network, consisting of resistors R416, R414 and R415, is connected between this +60v plate voltage and the -560v bias voltage to provide approximately -254v on the grid (terminal 1) of tube V402. Since the cathode of tube V402 is tied directly to the -250v Supply, a bias of approximately -4v results. The screen (pin 6) of amplifier tube V402 is stabilized by means of cold cathode neon lamp DS401, to approximately 65v above the cathode voltage (-250v). The plate (pin 5) of tube V402 is returned through resistor R418 to the +250v Supply. The output of tube V402 is therefore able to swing between a voltage near +200 to a voltage near -200 depending upon the input signal. The output of pentode amplifier V402 is coupled to pin 2 of output tube V403B by means of a voltage divider consisting of resistors R423 and R427. Since the plate of pentode amplifier V402 operates approximately 125v positive with respect to its cathode (-250v), the plate is at approximately -125v with respect to ground. This negative 125v, when coupled through divider R423 and R427, causes the grids of the output stage V403B (terminal 2) to assume approximately -266v; i.e., a grid bias of approximately -16v exists.

2-8.10. The elements in output tubes V403A and V403B are connected in what is generally called a Peterson amplifier circuit. This circuit operates as follows: tubes V403A and V403B and resistors R429 and R430 are connected in series across the +250v and -250v Supplies. The grid of V403A is biased by the drop across resistor R429, the value of R429 being chosen such that maximum output load conditions will be met. As the grid of V403B is made more positive, the plate of V403B will be moved below ground potential causing increased current to flow between the +250v and -250v Supply. This increased current increases the IR drop across resistor R429 resulting in increased bias on tube V403A, and therefore, in a net increase in the plate resistance of this tube. If a load is connected to the output circuit, it can be seen that the biasing of V403A will be even more rapid for a given bias change on V403B due to increased drop across R429. As a result, for a negative going output excursion the current drawn from the +250v Supply will decrease as the output increases negatively.

Conversely, if the bias on tube V403B is made more negative the plate voltage of V403B tends to rise, reducing the current flow through resistor R429, thereby decreasing the bias on

tube V403A. This in turn causes V403A to furnish the necessary current to produce the positive output excursion.

Resistor R430 acts as a limiting resistor for positive excursions of amplifier output. This resistor is necessary in order that the plate dissipation of tube V403A not be exceeded under certain load conditions.

2-8.11. The overall gain of the DC portion of the amplifier is approximately 40,000. During applications the amplifier may be called upon to operate at various gains between zero to 100 or more. It is necessary that proper roll-off networks be placed in the amplifier to prevent instability under conditions of large changes of feedback ratios. The particular roll-off networks utilized in the amplifier will depend upon application. These networks consist of capacitors C406, C410, C423, C425 and C427 and resistors R417, R424 and R428. In the amplifier proper, most of these networks are mounted by means of screw type tie points; therefore, it is possible to change these networks without soldering. In any given amplifier it is unlikely that all of the resistors and capacitors will be utilized at one time for cutoff purposes.

2-8.12. A mathematical derivation covering the operation of the stabilizer circuit was presented in paragraph 2-8.6. The stabilizer circuit operates by sampling the error voltage (e) appearing on the summing juncture, amplifying, then reinserting this amplified signal into the DC portion of the amplifier in such a manner as to cause a reduction in the original offset error.

Referring to Figure 7-10 (schematic), the summing juncture error voltage is coupled to the input of the chopper circuit by means of resistors R403, R401 and R402. A mechanical (or electronic) chopper, K401A, alternately shorts and opens, causing a square wave proportional to the magnitude of the error voltage to be applied to the grid of a-c amplifier tube V404A.

The a-c signals applied to the grid of amplifier tube V404A are amplified and coupled by capacitor C405 to the input of amplifier stage V404B. Here again the signals are amplified and coupled by capacitor C409 and resistor R432 to a second set of contacts in converter K401A. This second set of contacts is used to rectify the a-c signal from the output of tube V404B to restore the d-c component to the signal. The rectified signal is coupled via an RC filter, consisting of resistor R433 and capacitor C411, to the input grid of the right-hand portion of input stage V401. As previously described, this stage is used to cathode couple the amplified stabilizer error voltage signal to the first amplifier tube in the DC portion of the amplifier. This signal in turn modifies the output of the DC amplifier so as to reduce the error voltage occurring at the summing juncture.

2-8.13. Resistor R403 and diodes CR401 and CR402 act as a voltage-limiting device to the input of the stabilizer portion of the amplifier. When the rise time characteristics of the input signal to the overall DC amplifier exceed the frequency capabilities of the amplifier (as determined by the roll-off networks) a transient will appear at the summing juncture. Resistor R403 in conjunction with diodes CR401 and CR402 limit this transient before application of the

summing juncture error signal to the stabilizer input filter consisting of resistors R401, R402 and capacitor C401. This latter filter in turn reduces the magnitude of such impulses before application to the input of the first amplifier tube V404A. DC Amplifier 63-4C may therefore be utilized for pulse type as well as d-c type signal inputs. A polystyrene condenser C403 is connected between the output of filter R401, R402, C401 and the grid of the first amplifier stage V404A, thereby effectively blocking any grid current generated by tube V404A from the summing juncture. The grids of a-c amplifier tubes V404A and V404B are operated at fixed bias of approximately -1v, developed by means of resistor dividers R425 and R408. Tube V404A amplifies the chopped signal appearing at the junction of converter K401A and capacitor C403. This amplified signal has a portion of the higher frequency components removed by a roll-off network consisting of resistor R413 and capacitor C404 before application to the second amplifier stage V404B. A second roll-off network consisting of resistor R420, R421 and capacitor C408 is associated with this second stage to further remove high frequency components.

2-8.14 The amplified signal from tube V404B is capacity coupled via capacitor C409 to a second (rectifying) portion of converter K401A. This resultant rectified signal is applied to an RC filter consisting of resistor R433, capacitor C411, and diode CR406. Positive output excursions appearing on the filter (i.e., on the input of tube V401) are limited by conduction of the grid (pin 2) of tube V401 through the cathode and diode CR405 to divider network R410, R411 and R412. Diode CR406 limits the negative excursion appearing on the output of the filter (i.e., on the grid of V401). Neon overload indicator DS402 is connected across the output of amplifier tube V404B. When an overload occurs, the summing juncture no longer remains at ground potential and a relatively large signal is coupled to the input of the stabilizer circuit. This signal is amplified by tubes V404A and V404B, producing a large output signal at pin 6 of tube V404B, thereby energizing neon overload indicator DS402.

2-8.15. Balancing of the DC amplifier is accomplished by utilizing the stabilizer amplifier as a means for determining whether or not any offset voltage exists on the input terminal (summing juncture) of the DC amplifier. During this measurement the stabilizing correction signal must be removed from the DC portion of the amplifier and condenser C402 must be shorted. Balancing is accomplished as follows: Depress BALANCE pushbutton S401 to remove stabilizer correction signal from pin 2 of tube V401 by shorting condenser C411 to ground. In addition, contacts 1A and 1B of switch S401 short condenser C402. If balance control R414 is now rotated, the offset signal appearing at the summing juncture may be negative, zero or positive. If the signal is at or near zero, balance indicator DS401 will be extinguished. If the balance control is moved to either side of the balance position, the neon indicator will glow. When the balance potentiometer has been adjusted so as to cause the indicator to extinguish, the offset signal at the input of the amplifier will be less than 10 millivolts. Upon release of the BALANCE pushbutton, stabilization is reinserted in the amplifier circuit (tube V401B) and the offset will decrease to less than 50 microvolts.

2-8.16. As the amplifier stands it is capable of driving a 4,000Ω load to ±100v or a 10,000Ω load to ±140v. If the amplifier is to drive lower loads, external resistor R_x should be added in accordance with the table shown in the lower portion of Figure 7-10. These resistors should not be added unless the load is actually to be driven, as this not only increases the current drain from the Power Supply, but in some instances can result in over-dissipation within the output tube over certain portions of the output range.

2-8.17. Nearly all amplifier troubles manifest themselves in three forms:

a. Inoperation due to a tube failure.*
b. Inoperation due to a bad mechanical converter K401.*
c. Noise in the output due to a faulty tube.*
d. In the cases where solid state converters are utilized in place of mechanical converters, occasionally one of the incandescent lamps will fail. This should be replaced only with a type 49 lamp.
e. A Mechanical Converter Test Set should be used should realignment become necessary. This test set is shown schematically in Figure 7-13.

*The corrective action is to replace the bad element.

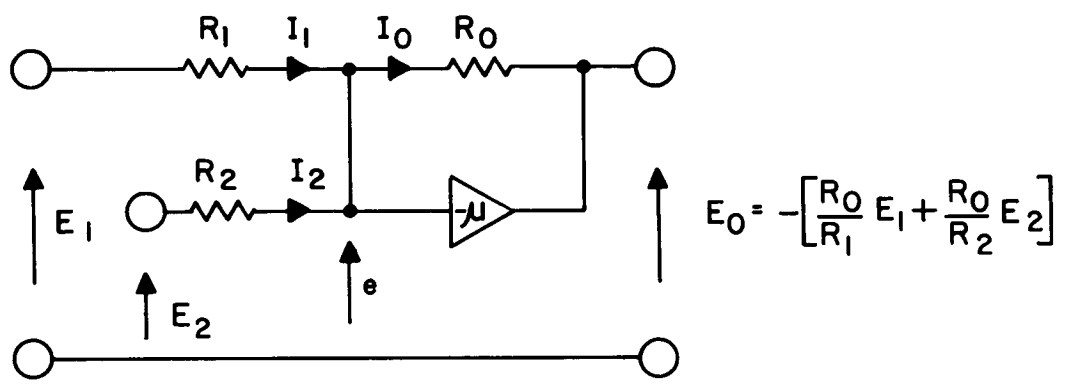

Figure 2-9. Summing Amplifier

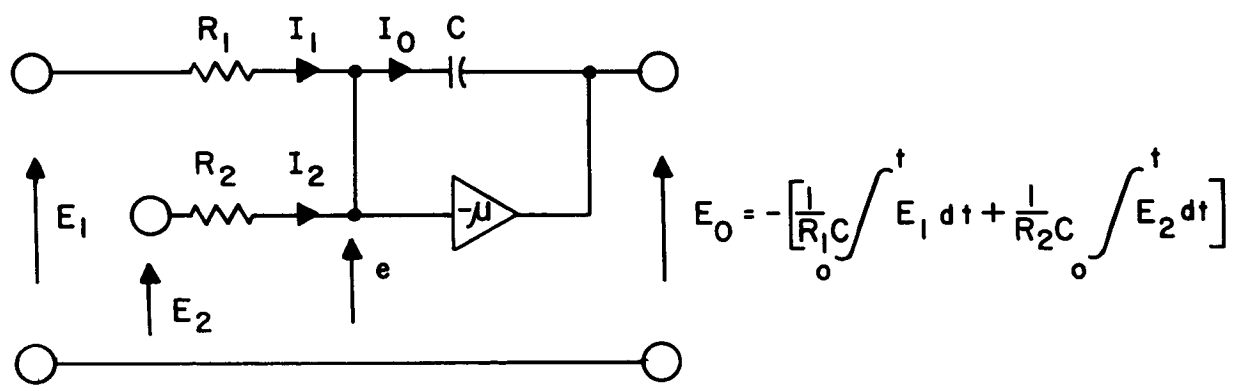

Figure 2-10. Integrating Amplifier

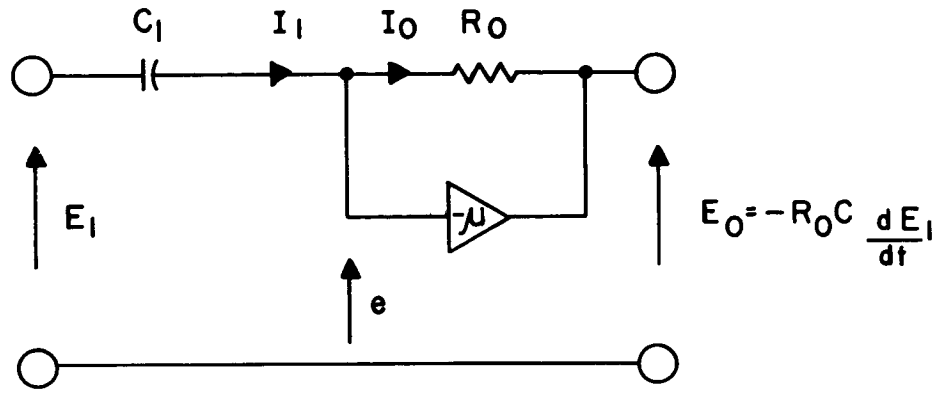

Figure 2-11. Differentiating Amplifier

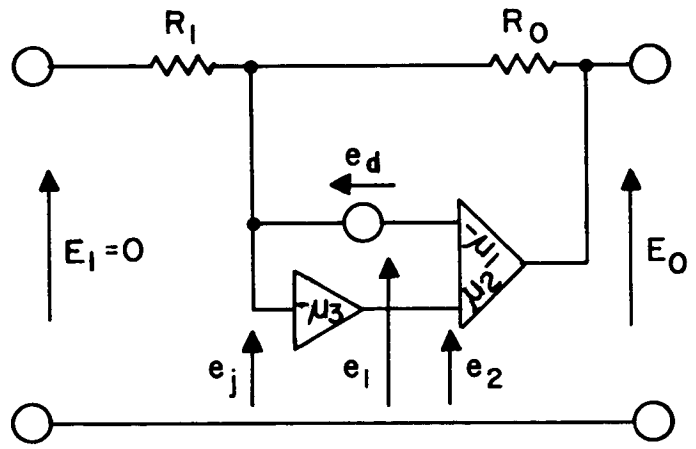

Figure 2-12. Drift Stabilization

Figure 2-9, 2-10, 2-11, and 2-12.

2-9. CHOPPER DRIVE CHASSIS, MEC MODEL 77-9B (Figures 7-14 and 7-15)

2-9.1. The Chopper Drive Chassis contains the necessary circuitry to drive the DC amplifier choppers. This circuitry primarily consists of a plug-in transistor network (N901) and four transistors (Q901, Q902, Q903 and Q904). On the front panel of the chassis is test jack TJ902 which is labeled OSC; test jack TJ901 which is labeled OV; and test jack TJ903 labeled OUTPUT. A detailed theory of operation of N901 is given in Chapter IX, Appendix, under the heading "TN134 Gated Oscillator and Squaring Circuit."

2-9.2. N901 operates as a Colpitts oscillator resonated by split capacitors C901 and C902 and tuned to 94 cps by variable inductor L901. The square wave output of pin 8 of N901 is applied to the base of Q901. The square wave output from the collector of Q901 is brought to TJ902 for monitoring purposes. This signal is also applied to the base of Q902 and subsequently to the power output circuit consisting of Q903 and Q904. The output square wave from the emitter of Q904 is coupled via the 4000 μfd capacitor C903 to the chopper drive coils, where it proceeds to drive the DC amplifier choppers. TJ903 is for monitoring the output of the circuitry.

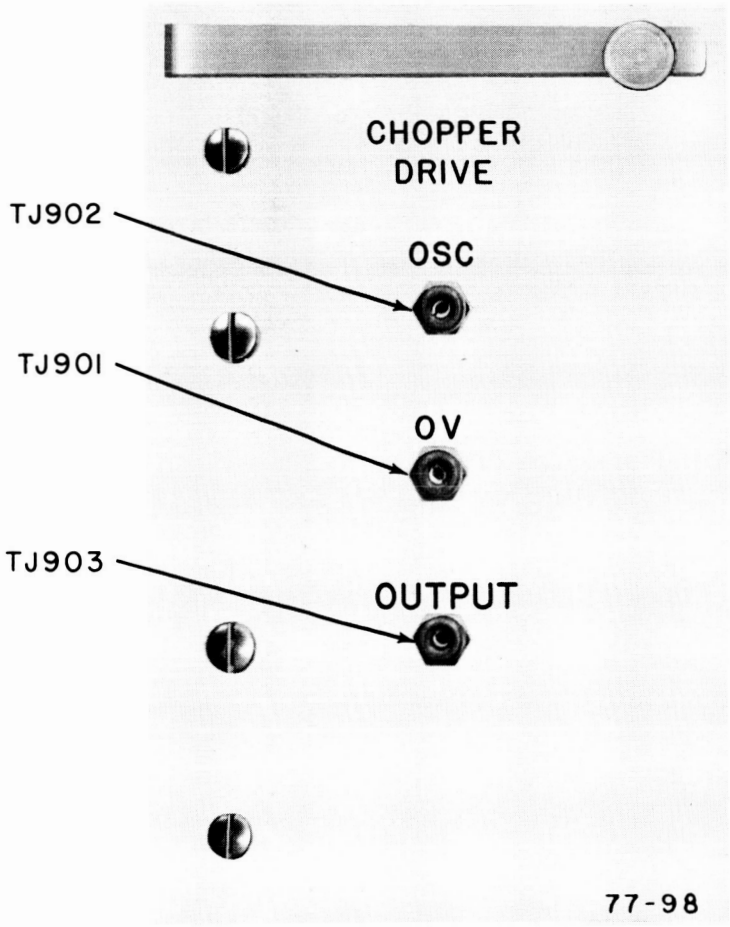

Figure 2-13. Chopper Drive Chassis

2-10. D-A TEST CONTROL UNIT, MEC MODEL 77-5AAA (Figures 7-16 and 7-17)

2-10.1. The Test Control Unit is a portable testing unit with two cables terminating in 50 pin plugs which are inserted into the test jack of a given Data Summing Chassis. Since two cables are provided, data can be inserted into two channels simultaneously while testing, thereby permitting the Test Control Unit to be used in conjunction with the D-A Converter to control the positioning of a plotting board. The single red wire terminated with a phone plug is inserted into the -20v test jack of the MEC Model 165-4C Power Supply and provides the simulated -17v level necessary to energize the mercury-wetted relays. Switches S502 through S511 are used to energize certain relays in the Data Summing Chassis, thereby simulating data inputs to the D-A Converter. A typical mercury-wetted relay configuration is shown in the upper left-hand portion of Figure 7-16. As a given switch is placed in the "1" position, its relay is energized, causing a change in analog voltage in that particular channel. Switch S501 is used to energize the hold relay for the same Data Summing Chassis. Switches S512 through S522 are used for similar functions for a second Data Summing Chassis.

Figure 2-14. D-A Test Control Unit

2-10.2. Table 2-2 lists some relay data patterns and the analog voltages resulting from them.

Switches in "1" Position	Analog Output Voltages
None	-34.9658
1	-34.8974
1, 2	-34.7606
1, 2, 4	-34.4873
1-8	-33.9402
1-16	-32.8460
1-32	-30.6589
1-64	-26.2839
1-128	-17.5339
1-256	- .0342
512	+ .0342
1-512	+ .1026
256, 512	+17.5339
128, 256, 512	+26.2839
64-512	+30.6589
32-512	+32.8460
16-512	+33.9402
8-512	+34.4873
4-512	+34.7606
2-512	+34.8974
1-512	+34.9658

Table 2-2. Representative Test Control Settings

CHAPTER III

OPERATION

3.1. INSTALLATION

3-1.1. General - No special considerations are necessary in selecting a site for the D-A Converter. The unit is completely self-contained, and the rack provides adequate shielding for operation under conditions of high signal levels.

3-1.2. Input-Output Connections

External connections to the D-A Converter are made to five different MS type connectors, J26 through J30. Tables 3-1, 3-2, 3-3, 3-4 and 3-5 list each connector and its associated cabling information.

Table 3-1. Analog Output Connector J26

Terminal	Identification	AWG
A	Analog Output #2	*
B		
C	Analog Output #5	*
D		
E	Analog Output #7	*
F		
G	Analog Output #6	*
H		
J	Analog Output #3	*
K		
L	Analog Output #1	*
M		
N		
P		
R	High Quality Ground	18
S	High Quality Ground	18
T		
U		
V	Analog Output #4	*

Table 3-2. Reference Connector J27

Terminal	Identification	AWG
A	+ External Reference Input	*
B	+ Internal Reference Output	*
C	+ Internal Reference Output	*
D		*
E		*
F	- Internal Reference Output	*
G	- Internal Reference Output	*
H	+ External Reference Input	*
I	High Quality Ground	18
J	High Quality Ground	18

*RG-174/U Coax

Table 3-3. A-C Power Connector J28

Terminal	Identification	AWG
A	120 VAC 1 Input	12
B	120 VAC Common	12
C	Rack Ground	12
D		
E	120 VAC 2 Input	12

Table 3-4. Digital Input Connector #1 J29

Terminal	Identification		AWG	Terminal	Identification		AWG
1	Bit #1 (LSB)		*	16	Bit #1 (LSB)		*
A	Bit #2		*	P	Bit #2		*
2	Bit #3		*	17	Bit #3		*
B	Bit #4		*	Q	Bit #4		*
3	Bit #5	Analog Channel #1	*	18	Bit #5	Analog Channel #4	*
C	Bit #6		*	R	Bit #6		*
4	Bit #7		*	19	Bit #7		*
D	Bit #8		*	S	Bit #8		*
5	Bit #9		*	20	Bit #9		*
E	Bit #10 (MSB)		*	T	Bit #10 (MSB)		*
6	Bit #1 (LSB)		*	21			
F	Bit #2		*	U			
7	Bit #3		*	22			
G	Bit #4		*	V			
8	Bit #5	Analog Channel #2	*	23			
H	Bit #6		*	W			
9	Bit #7		*	24			
I	Bit #8		*	X			
10	Bit #9		*	25			
J	Bit #10 (MSB)		*	Y			
11	Bit #1 (LSB)		*	-4.5 Shield Ground (Digital Ground)			16
K	Bit #2		*	+4.5 Shield Ground			16
12	Bit #3		*				
L	Bit #4		*				
13	Bit #5	Analog Channel #3	*				
M	Bit #6		*				
14	Bit #7		*				
N	Bit #8		*				
15	Bit #9		*				
O	Bit #10 (MSB)		*				

*RG-174/U Coax

Table 3-5. Digital Input Connector #2 J30

Terminal	Identification		AWG	Terminal	Identification	AWG
1	Bit #1 (LSB)		*	16		*
A	Bit #2		*	P		*
2	Bit #3		*	17		*
B	Bit #4	Analog Channel #5	*	Q		*
3	Bit #5		*	18		*
C	Bit #6		*	R		*
4	Bit #7		*	19		*
D	Bit #8		*	S		*
5	Bit #9		*	20		*
E	Bit#10 (MSB)		*	T		*
6	Bit #1 (LSB)		*	21		*
F	Bit #2		*	U		*
7	Bit #3		*	22		*
G	Bit #4	Analog Channel #6	*	V		*
8	Bit #5		*	23		*
H	Bit #6		*	W		*
9	Bit #7		*	24		*
I	Bit #8		*	X		*
10	Bit #9		*	25	Digital Ground	16
J	Bit #10 (MSB)		*	Y	Hold Relay Trigger	*
11	Bit #1 (LSB)		*	-4.5	Shield Ground	16
K	Bit #2		*	+4.5	Shield Ground	16
12	Bit #3		*			
L	Bit #4	Analog Channel #7	*			
13	Bit #5		*			
M	Bit #6		*			
14	Bit #7		*			
N	Bit #8		*			
15	Bit #9		*			
O	Bit #10 (MSB)		*			

*RG-174/U Coax

3-1.3. Cabling Requirements

It should be noted that during installation, the a-c power cable and digital input cables should be isolated from the analog output and reference cables. They may occupy the same cable trough but must not, under any circumstances, be harnessed into the same cable.

3-1.4. Initial Adjustments

No initial adjustments are required prior to operation of the equipment, however, it is strongly urged that this manual be thoroughly read and completely understood before operating the equipment.

3-2. OPERATION STEPS

With all rack connectors properly connected and a-c power supplied to the D-A Converter, the following steps are required for operation:

a. Place a-c power switch S1 (located at lower rear of rack) to ON position. The two red power indicators DS1 and DS2 will glow.

b. Place STANDBY switch S604 located on the Control to the ON position. Amber FILAMENT indicators located on the high voltage Power Supplies 1576-4A and 1576-3A will light and the Blower will operate.

c. Allow one minute for DC amplifier filament heating then place POWER switch S605, located on the Control to the ON position. Red PLATE indicators located on the high voltage Power Supplies will glow.

d. Check Power Supply voltages utilizing meter M401 and switches S401 and S402 located on the Monitor Chassis. With a high quality voltmeter, set all Power Supply voltages to their exact values. Note the readings on M401 for future reference. M401 is intended for purposes of monitoring Power Supply voltage only. This meter is a ±2% meter and should be used only to determine if voltages are relatively accurate. An accurate voltmeter should be used to adjust all operational voltages.

e. Balance all DC amplifiers in the DC Amplifier Chassis; the A amplifier first, the B amplifier last. This is accomplished as follows:

   (1) depress pushbutton S401
   (2) rotate potentiometer R414 until neon indicator DS401 is extinguished
   (3) release pushbutton
   (4) repeat for S402, R447 and DS403 for the B amplifier.

f. On the Control Chassis, depress RESET pushbuttons S601, S602, and S603. Meters M601, M602 and M603 will read 100% and POWER FAILURE indicator I601 will extinguish. Set adjustable detection arms on meters M601, M602 and M603 to 95% and 105% as described in subsection 2-3.

g. If the Converter is to be utilized without being slaved to an external +35v

reference, set switch S1002 on the Reference Chassis to the INT (internal) position and press the RESET pushbutton S1001. Meter Relay M1001 will monitor the internal +35v reference and read 100%. Indicator I1001 will be extinguished. Set the adjustable detection arms on M1001 to 95% and 105% as described in paragraph 2-7.2.

h. If the Converter is to be slaved to an external +35v reference, set switch S1002 on the Reference Chassis to the EXT (external) position and depress RESET pushbutton S1001. Meter M1001 will monitor the external +35v reference input and will read 100%. Indicator I1001 will be extinguished. Set adjustable detection arms on M1001 as described in paragraph 2-7.2.

i. Check reference voltages on M402 located on the Monitor Chassis. Measure outputs A and B at test jacks TJ401 and TJ402 of the reference DC Amplifier. Reference voltages should be exactly +35v and -35v.

j. With Model 77-5AAA D-A Test Control Unit connected to Data Summing Units #1 and #2 as described in sub-section 2-10, set Test Control switches to the "1" position and HOLD RELAY switches to the "0" position. Check analog output voltages with M402 on the Monitor Chassis and at the B Amplifier test jack TJ402 of the DC Amplifier directly above the respective Data Summing Chassis. Channel #1 and #2 outputs should be +35v. Next, place the Test Control switches in the "0" position. Observed voltages should go to -35v. Then, place the HOLD RELAY switches to "1". The observed voltages should hold for a period of time before drifting to 0v. Repeat all three tests for the remaining five channels.

The D-A Converter is now operational.

CHAPTER IV
MAINTENANCE

Preventive maintenance is recommended for the following parts of the equipment:

(a) The Blower filter should be removed and cleaned in a solution of warm water and detergent at least every 30 days.

(b) The various electronic tubes should be tested periodically.

No other preventive maintenance is recommended. However, malfunctions of individual parts are to be expected and can be located by trouble-shooting using MEC Type 63-4AX Mechanical Converter Test Set, MEC Model 77-5AAA D-A Test Control Unit, and/or common test equipment (voltmeters, ohmeters, ampmeters, oscilloscopes, etc.). Many of the malfunctions can be located by merely observing the many neon lamps located on the front panels and within the various chassis. If relays and/or other electro-mechanical devices do not function properly with normal routine adjustments, the complete sub-assembly should be replaced and the malfunctioning unit returned to the manufacturer for possible repairs.

CHAPTER V

PARTS LIST

The MEC Model 77 D-A Converter consists of the following assemblies:

Quantity	Assembly
1	MEC Model 77-1AA D-A Converter Rack
2	MEC Model 1576-4A +250v Power Supply
2	MEC Model 1576-3A -250v, -560v Power Supply
8	MEC Model 63-4C DC Amplifier
7	MEC Model 77-5A Data Summing
1	MEC Model 77-4A Monitor
1	MEC Model 77-9B Chopper Drive
1	MEC Model 77-10A Reference
1	MEC Model 77-6A Control
2	MEC Model 165-4C Power Supply
1	Blower

1	2	3		4	5	6	7	8
ITEM NO.	REFER. DESIG-NATOR	CLASS	STOCK NO.	MFG. AND PART NO.	DESCRIPTION 1 2 3 4 5 6 7	UNIT PER ASSY.	PROCURE-MENT CODE	UNIT COST (EST.)
1-1				MEC 77-LAA	ASSEMBLY, RACK, D-A CONVERTER	1		
1-2	DS1-DS2			Eldema 1CG12-4535	LAMP, Neon to Spec. 21C-3864-7	2		
1-3	F1, F2			Bussmann FNM	FUSE, 5 Amp	2		
1-4	J26			Cannon MS3102A-22-14S	CONNECTOR	1		
				Cannon MS3106B-22-14P	CONNECTOR	1		
				Cannon AN3057-12	CABLE CLAMP	1		
1-5	J27			Cannon MS3102A-18-1S	CONNECTOR	1		
				Cannon MS3106B-18-1P	CONNECTOR	1		
				Cannon AN3057-10	CABLE CLAMP	1		
1-6	J28			Cannon MS3102A-18-11P	CONNECTOR	1		
				Cannon MS3106A-18-11S	CONNECTOR	1		
				Cannon AN3057-10	CABLE CLAMP	1		
1-7	J29, J30			Cannon MS3102A-36-404P	CONNECTOR	2		
				Cannon MS3106B-36-404S	CONNECTOR	2		
1-7 Cont'd.				Cannon AN3057-24	CABLE CLAMP	2		
1-8	S1			Carling 2GL63-73	SWITCH, Toggle, DPDT, on-none-on	1		
1-9				Bussmann HPC	FUSE HOLDER	2		
1-10				Eldema 11H4593	INDICATOR HOLDER	2		
1-11				Eldema 11H4119	LENS CAP (Red)	2		

1	2	3		4	5	6	7	8
ITEM NO.	REFER. DESIG-NATOR	CLASS	STOCK NO.	MFG. AND PART NO.	DESCRIPTION 1 2 3 4 5 6 7	UNIT PER ASSY.	PROCURE-MENT CODE	UNIT COST (EST.)
4-1				MEC 1576-4A	ASSEMBLY, POWER SUPPLY, +250 V	1		
4-2	C401			Sangamo 7110-2R	CAPACITOR, Fixed, 2μf 1000 vdc	1		
4-3	C402, C403 C405			Aerovox AEP88J	CAPACITOR, Fixed Dual, 40-40μf 450 vdc Plug-In	3		
4-4	C404			Cornell Dubilier PM4P47	CAPACITOR, Fixed Mylar, .47μf 400 vdc	1		
4-5	CR401-CR408			G. E. IN1695	DIODE	8		
4-6	DS401 DS402			Eldema 1CG12-4535	INDICATOR, Neon to Spec 21C-3864-7	2		
4-7	F403			Bussmann MDL	FUSE, 1/2 Amp., 250V, Slo-Blo	1		
4-8	F401, F402			Bussmann AGC	FUSE, 3 Amp.	2		
4-9	L401			Chicago Std. RH-8300	CHOKE, (Filter Reactor) 300 ma dc, 8 Hy 55Ω dc, Type TF4RX01YY	1		
4-10	P401			Cannon DD-50P	PLUG	1		
4-11	R401, R402			MIL RC20GF474K	RESISTOR, Fixed composition, 470K ±10% 1/2W	2		
4-12	R403-R405			MIL RC20GF101K	RESISTOR, Fixed composition, 100Ω ±10% 1/2W	3		
4-13	R406, R408 R410			MIL RC42GF470K	RESISTOR, Fixed composition, 47Ω ±10% 2W	3		
4-14	R407, R409 R411, R412, R414			MIL RC20GF102K	RESISTOR, Fixed composition, 1000Ω ±10% 1/2W	5		
4-15	R413, R418			MIL RC42GF823K	RESISTOR, Fixed composition, 82K ±10% 2W	2		
4-16	R416			MIL RC20GF334K	RESISTOR, Fixed composition, 330K ±10% 1/2W	1		
4-17	R417			MIL RC20GF684K	RESISTOR, Fixed composition, 680K ±10% 1/2W	1		
4-18	R419			MIL RC20GF184K	RESISTOR, Fixed composition, 180K ±10% 1/2W	1		
4-19	R420			MIL RC20GF754K	RESISTOR, Fixed composition, 750K ±10% 1/2W	1		
4-20	R422, R424			MEC A2001F6A1	RESISTOR, Precision Per MEC Dwgs. A2001F6A1 and A2001F6A2, 300K ±1%	2		
4-21	R423			Chicago Telephone FF18378	POTENTIOMETER, Type 25, 20K	1		
4-22	R421			MIL RC42GF104K	RESISTOR, Fixed composition, 100K ±10% 2W	1		
4-23	R425, R426			MIL RC20GF104K	RESISTOR, Fixed composition, 100K ±10% 1/2W	2		
4-24	R415			MIL RC20GF155K	RESISTOR, Fixed composition, 1.5M ± 10% 1/2W	1		
4-25	T401			Chicago Std. PMS-550 (MS90032)	TRANSFORMER, Power, 105/115/125VAC, 54-66 cps primary, 550-0-550 VAC, 250 ma dc Secondary, output 419 vdc, Type TFRX02LB002.	1		
4-26	T402			MEC 1-102	TRANSFORMER	1		
4-27	V401-V403			Comm. 6550	TUBE, Electron	3		
4-28	V404, V405			Comm. 12AT7	TUBE, Electron	2		

1	2	3		4	5	6	7	8
ITEM NO.	REFER. DESIG-NATOR	CLASS	STOCK NO.	MFG. AND PART NO.	DESCRIPTION 1 2 3 4 5 6 7	UNIT PER ASSY.	PROCURE-MENT CODE	UNIT COST (EST.)
4-29	XDS401 XDS402			Eldema 11H-4593	INDICATOR HOLDER	2		
4-30	XF401- XF403			Bussmann HKP	FUSEHOLDER	3		
4-31	XC401- XC403 XV401- XV403			JAN TS101P01	SOCKET, Tube Octal, Mica filled	6		
4-32	XV404 XV405			JAN TS103P01	SOCKET, Tube, 9 Pin Miniature, Mica filled	2		
4-33				Eldema 11H-4119	LENS CAP, Red	1		
4-34				Eldema 11H-4118	LENS CAP, Amber	1		
3-1				MEC 1576-3A	ASSEMBLY, POWER SUPPLY, -250V, -560V	1		
3-2	C301			Sangamo 7110-2R	CAPACITOR, Fixed, 2μf 1000 vdc	1		
3-3	C302			Aerovox JP616MCB	CAPACITOR, Fixed, 1μf 600 vdc	1		
3-4	C303-C307 C309, C310			Aerovox AEP88J	CAPACITOR, Fixed Dual, 40-40μf 450 vdc Plug-In.	7		
3-5	C308			Cornell Dubilier PM4P47	CAPACITOR, Fixed Mylar, .47μf 400 vdc	1		
3-6	CR301- CR312			G. E. IN1695	DIODE	12		
3-7	DS301 DS302			Eldema 1CG12-4535	LAMP, Neon to Spec. 21C-3864-7	2		
3-8	F301-F302			Bussmann AGC	FUSE, 3 Amp	2		
3-9	F303			Bussmann MDL	FUSE, 1/2 Amp, 250V, Slo-Blo	1		
3-10	L301			Chicago Std. RH-8300	CHOKE, (Filter Reactor) 300 madc, 8 Hy 55Ω dc, Type TF4RX01YY	1		
3-11	L302			Chicago Std. RH-1055	CHOKE, (Filter Reactor) 55 madc, 10 Hy 230Ω dc, Type TF4RX01YY	1		
3-12	P301			Cannon DD-50P	PLUG	1		
3-13	R301-R304			MIL RC20GF474K	RESISTOR, Fixed composition, 470K ±10% 1/2W	4		
3-14	R305, R306			Ward Leonard 5X2,000	RESISTOR, Fixed Axiohm, 2K 5W	2		

1	2	3		4	5	6	7	8
ITEM NO.	REFER. DESIG-NATOR	CLASS	STOCK NO.	MFG. AND PART NO.	DESCRIPTION 1 2 3 4 5 6 7	UNIT PER ASSY.	PROCURE-MENT CODE	UNIT COST (EST.)
3-15	R307-R309			MIL RC20GF101K	RESISTOR, Fixed composition, 100Ω ±10% 1/2W	3		
3-16	R310, R312 R314			MIL RC42GF470K	RESISTOR, Fixed composition, 47Ω ±10% 2W	3		
3-17	R311, R313 R315, R316 R318			MIL RC20GF102K	RESISTOR, Fixed composition, 1000Ω ±10% 1/2W	5		
3-18	R317, R322			MIL RC42GF823K	RESISTOR, Fixed composition, 82K ±10% 2W	2		
3-19	R319, R323			MIL RC20GF824K	RESISTOR, Fixed composition, 820K ±10% 1/2W	2		
3-20	R320			MIL RC20GF334K	RESISTOR, Fixed composition, 330K ±10% 1/2W	1		
3-21	R325			MIL RC42GF104K	RESISTOR, Fixed composition, 100K ±10% 2W	1		
3-22	R324			MIL RC20GF184K	RESISTOR, Fixed composition, 180K ±10% 1/2W	1		
3-23	R326			MEC A2001F6A1	RESISTOR, Precision Per MEC Dwgs. A2001F6A1 and A2001F6A2, 300K ±1%	1		
3-24	R327			Chicago Telephone FF18378	POTENTIOMETER, Type 25, 20K	1		
3-25	R328			MEC A2001F6A1	RESISTOR, Precision Per MEC Dwgs. A2001F6A1 and A2001F6A2, 250K ±1%	1		
3-26	R329			MIL RC20GF181K	RESISTOR, Fixed composition, 180Ω ±10% 1/2W	1		
3-27	R330, R331 R332			MIL RC20GF104K	RESISTOR, Fixed composition, 100K ±10% 1/2W	3		
3-28	R321			MIL RC20GF155K	RESISTOR, Fixed composition, 1.5M ±10% 1/2W	1		
3-29	R333, R334			MIL RC32GF473K	RESISTOR, Fixed composition, 47K ±10% 1W	2		
3-30	T301			Chicago Std. PMS-5S0 (MS90032)	TRANSFORMER, Power, 105/115/125VAC, 54-66 cps primary, 550-0-550 VAC, 250 ma dc Secondary, output 419V dc, Type TFRX02LB002.	1		
3-31	T302			MEC 1-102	TRANSFORMER	1		
3-32	V301-V303			Comm. 6550	TUBE, Electron	3		
3-33	V304, V305			Comm. 12AT7	TUBE, Electron	2		
3-34	V306, V307			Comm. OA2	TUBE, Electron	2		
3-35	XDS301 XDS302			Eldema 11H-4593	INDICATOR HOLDER	2		
3-36	XF301 XF302 XK303			Bussmann HKP	FUSEHOLDER	3		
3-37	XC303-XC307, XC309, XC310 XV301-XV303			JAN TX101P01	SOCKET, Tube Octal, Mica filled	10		
3-38	XV304 XV305			JAN TS103P01	SOCKET, Tube, 9 Pin Miniature, Mica filled	2		
3-39	XV306 XV307			JAN TS102P01	SOCKET, Tube, 7 Pin Miniature, Mica filled	2		

1 ITEM NO.	2 REFER. DESIG-NATOR	3 CLASS	3 STOCK NO.	4 MFG. AND PART NO.	5 DESCRIPTION 1 2 3 4 5 6 7	6 UNIT PER ASSY.	7 PROCURE-MENT CODE	8 UNIT COST (EST.)
3-40				Eldema 11H-4118	LENS CAP, Amber	1		
3-41				Eldema 11H-4119	LENS CAP, Red	1		
4-1				MEC 63-4C	ASSEMBLY, DC AMPLIFIER			
4-2	C402 C405 C413 C416			Cornell Dubilier PM4S5	CAPACITOR, Fixed Mylar, .05μf, 400vdc	4		
4-3	C403 C414			Southern Elect. Sec 1645	CAPACITOR, .1μf, Poly, ±20%, 200vdc	2		
4-4	C404 C415			MIL DM-15-271	CAPACITOR, Dura Mica, 270μμf, 500vdc	2		
4-5	C406 C417			MIL DM-15-101	CAPACITOR, Dura Mica, 100μμf, 500vdc	2		
4-6	C407 C409 C418 C420			Cornell Dubilier PM4S1	CAPACITOR, Fixed Mylar, .01μf, 400vdc	4		
4-7	C408 C419			MIL DM-15-150K	CAPACITOR, Dura Mica, 15μμf, 500vdc	2		
4-8	C410 C421			MIL DM-15-681K	CAPACITOR, Dura Mica, 680μμf, 500vdc, 10%	2		

1 ITEM NO.	2 REFER. DESIG-NATOR	3 CLASS	3 STOCK NO.	4 MFG. AND PART NO.	5 DESCRIPTION 1 2 3 4 5 6 7	6 UNIT PER ASSY.	7 PROCURE-MENT CODE	8 UNIT COST (EST.)
4-9	C411 C422			MIL CP65B1EF105K	CAPACITOR, 1.0μf, 600vdc	2		
4-10	C425 C426			MIL DM-19-102K	CAPACITOR, Dura Mica, 1000$\mu\mu f$, 500vdc, 10%	2		
4-11	C427 C428			MIL CM-19B-101K	CAPACITOR, 100$\mu\mu f$, 500vdc, 10%	2		
4-12	CR401 CR402 CR405 CR407 CR408 CR411			Hughes HD6227	DIODE, Silicon	6		
4-13	CR403 CR404 CR409 CR410 CR406 CR412			MEC B63F4A	DIODE, Silicon	6		
4-14	DS402 DS404			Eldema 1CG12-4535	LAMP, Neon to Spec. 21C-3864-7	2		
4-15	DS401 DS403			Eldema NE-2	LAMP, Neon	2		
4-16	K401			Stevens Arnold CH-792	CHOPPER, DC-AC	1		
4-17	P401			Cannon DD50P	PLUG, Male 50 pin contact, 5 amp rating	1		
4-18	R401 R434			MIL RC20GF474K	RESISTOR, Fixed Composition, 470K, 10%, 1/2W	2		
4-19	R402 R435			MIL RC20GF155K	RESISTOR, Fixed Composition, 1.5 Meg., 10% 1/2W	2		
4-20	R403 R431 R436 R464			MIL RC20GF104K	RESISTOR, Fixed Composition, 100K, 10%, 1/2W	4		
4-21	R404 R437			MIL RC20GF275K	RESISTOR, Fixed Composition, 2.7 Meg., 10% 1/2W	2		
4-22	R405 R438			MIL RC20GF914J	RESISTOR, Fixed Composition, 910K, 5%, 1/2W	2		
4-23	R406 R439			MIL RC20GF514J	RESISTOR, Fixed Composition, 510K, 5%, 1/2W	2		
4-24	R407 R419 R440 R452			MIL RC20GF475K	RESISTOR, Fixed Composition, 4.7 Meg., 10% 1/2W	4		
4-25	R408 R441			MIL RC20GF102K	RESISTOR, Fixed Composition, 1K, 10%, 1/2W	2		
4-26	R409 R424 R426 R442 R454 R459			MIL RC20GF334K	RESISTOR, Fixed Composition, 330K, 10%, 1/2W	6		
4-27	R410 R443			MIL RC20GF182K	RESISTOR, Fixed Composition, 1800Ω, 10%, 1/2W	2		
4-28	R411 R444			MIL RC20GF473K	RESISTOR, Fixed Composition, 47K, 10%, 1/2W	2		
4-29	R412 R445			MIL RC20GF164J	RESISTOR, Fixed Composition, 160K, 5%, 1/2W	2		
4-30	R413 R446			MIL RC20GF563K	RESISTOR, Fixed Composition, 56K, 10%, 1/2W	2		
4-31	R414 R447			Allen Bradley JA1L040S504UC	POTENTIOMETER, 500K, 2W, Linear Taper	2		

1	2	3		4	5	6	7	8
ITEM NO.	REFER. DESIG-NATOR	CLASS	STOCK NO.	MFG. AND PART NO.	DESCRIPTION 1 2 3 4 5 6 7	UNIT PER ASSY.	PROCURE-MENT CODE	UNIT COST (EST.)
4-32	R416, R417 R449, R460			MIL RC20GF135J	RESISTOR, Fixed composition, 1.3M ±5% 1/2W	4		
4-33	R417, R450			MIL RC20GF823K	RESISTOR, Fixed composition, 82K ±10% 1/2 W	2		
4-34	R418, R451			MIL RC42GF184K	RESISTOR, Fixed composition, 180K ±10% 2W	2		
4-35	R422, R455			MIL RC20GF124K	RESISTOR, Fixed composition, 120K ±10% 1/2W	2		
4-36	R423, R456			MIL RC20GF624J	RESISTOR, Fixed composition, 620K ±5% 1/2W	2		
4-37	R425, R458			MIL RC20GF224K	RESISTOR, Fixed composition, 220K ±10% 1/2W	2		
4-38	R428, R461			MIL RC20GF183K	RESISTOR, Fixed composition, 18K ±10% 1/2W	2		
4-39	R429, R462			MIL RC32GF222K	RESISTOR, Fixed composition, 2.2K ±10% 1W	2		
4-40	R480, R463			MIL RC32GF681K	RESISTOR, Fixed composition, 680Ω ±10% 1W	2		
4-41	R433, R466			MIL RC20GF226K	RESISTOR, Fixed composition, 22M ±10% 1/2W	2		
4-42	R467			MIL RC42GF270K	RESISTOR, Fixed composition, 27Ω ±10% 2W	1		
4-43	S401, S402			Grayhill 35-1	SWITCH, Pushbutton. (Black Button)	2		
4-44	TJ401			H.H. Smith 1501-113	JACK, Test, (Gray)	1		
4-45	V403, V407			Comm. 7044	TUBE, Electron	2		
4-46	V402, V406			Comm. 6661	TUBE, Electron	2		
4-47	V401, V405			Comm. 6072	TUBE, Electron	2		
4-48	V404, V408			Comm. 6681	TUBE, Electron	2		
4-49	XDS402 XDS404			Eldema 1DH6-4591	INDICATOR HOLDER, with Translucent Lens Cap	2		
4-50	XV408 XV403 XV404 XV407			JAN TS103P01	SOCKET, Tube, 9 Pin (Phenolic)	4		
4-51	XV401 XV405			JAN TS103C01	SOCKET, Tube, 9 Pin (Ceramic)	2		
4-52	XV406 XV402			JAN TS102P01	SOCKET, Tube, 7 Pin (Phenolic)	2		
4-53	XV409			JAN TS101P01	SOCKET, Tube, Octal (Phenolic)	1		

1	2	3		4	5	6	7	8
ITEM NO.	REFER. DESIG-NATOR	CLASS	STOCK NO.	MFG. AND PART NO.	DESCRIPTION 1 2 3 4 5 6 7	UNIT PER ASSY.	PROCURE-MENT CODE	UNIT COST (EST.)
5-1				MEC 77-5A	ASSEMBLY, DATA SUMMING	1		
5-2	C501			Cornell Dubilier PM4P1	CAPACITOR, Fixed Mylar, .1μf 400 vdc	1		
5-3	C502			Cornell Dubilier PM4P5	CAPACITOR, Fixed Mylar, .5μf 400 vdc	1		
5-4	CR501-CR511, CR515-CR525			Transitron T12G or Clevite CTP-503	DIODE	22		
5-5	CR512-CR514			G.E. IN1692	DIODE	3		
5-6	DS501-DS510			MEC 16-102	INDICATOR	10		
5-7	K501-K509			MEC RY-13	RELAY, Mercury wetted	9		
5-8	K510 K511			MEC RY-12	RELAY, Mercury wetted	2		
5-9	P501			Cannon DD-50P	PLUG	1		
5-10	P502			Winchester QRE-34S-LT	CONNECTOR, with SS Locking Screws	1		
5-11	R515			Ward Leonard 5X6000	RESISTOR, Fixed Axiohm, 6K ±5% 5W	1		
5-12	R516-R526			MIL RC20GF152K	RESISTOR, Fixed composition, 1.5K ±10% 1/2W			
5-13	R527-R537			MIL RC32GF561K	RESISTOR, Fixed composition, 560Ω ±10% 1W	11		
5-14	R538-R547			MIL RC20GF273K	RESISTOR, Fixed composition, 27K ±10% 1/2W	10		
5-15	R548			Ward Leonard 5X2000	RESISTOR, Fixed, Axiohm, 2000Ω ±5% 5W	1		
5-16	TJ501			Cannon DD-50S	CONNECTOR	1		
5-17	XK501-XK511			JAN TS101P01	SOCKET, Octal, Mica filled	11		

1	2	3		4	5	6	7	8
ITEM NO.	REFER. DESIG-NATOR	CLASS	STOCK NO.	MFG. AND PART NO.	DESCRIPTION 1 2 3 4 5 6 7	UNIT PER ASSY.	PROCURE-MENT CODE	UNIT COST (EST.)
4-1				MEC 77-4A	ASSEMBLY, MONITOR CHASSIS	1		
4-2	CR401 CR402			G. E. IN1695	DIODE	2		1.82
4-3	M401			Beede E-25	METER, Scale graduated from 0-12 as per Engineering Standards Drawing.	1		9.10
4-4	M402			Beede E-25	METER, Zero center, 1 ma-0-1 ma Movement with scale graduated as per MEC Dwg. A77F4A	1		9.10
4-5	P401			Cannon DD-50P	PLUG	1		5.85
4-6	R401			Phaostron CA4RS-1/2	RESISTOR, Precision, 5.6K ±1% 1/2W	1		1.40
4-7	R402			Phaostron CA4RS-1/2	RESISTOR, Precision, 560K ±1% 1/2W	1		1.40
4-8	R403			Phaostron CA4RS-1/2	RESISTOR, Precision, 250K ±1% 1/2W	1		1.40
4-9	R404			Phaostron CA4RS-1/2	RESISTOR, Precision, 85K ±1% 1/2W	1		1.40
4-10	R405			Phaostron CA4RS-1/2	RESISTOR, Precision, 20K ±1% 1/2W	1		1.40
4-11	R406			Phaostron CA4RS-1/2	RESISTOR, Precision, 12K ±1% 1/2W	1		1.40
4-12	R407			Phaostron CA4RS-1/2	RESISTOR, Precision, 51.4K ±1% 1/2W	1		1.40
4-13	R408			Phaostron CA4RS-1/2	RESISTOR, Precision, 35K ±1% 1/2W	1		1.40
4-14	S401			Centralab PA-2005	SWITCH, Rotary	1		3.42
4-15	S402			Centralab PA-2003	SWITCH, Rotary	1		3.42
4-16	S403			Centralab PA-2001	SWITCH, Rotary	1		3.42
4-17				Whitso K-105	KNOB	3		.56

1	2	3		4	5	6	7	8
ITEM NO.	REFER. DESIG-NATOR	CLASS	STOCK NO.	MFG. AND PART NO.	DESCRIPTION 1 2 3 4 5 6 7	UNIT PER ASSY.	PROCURE-MENT CODE	UNIT COST (EST.)
9-1				MEC 77-9B	ASSEMBLY, CHOPPER DRIVE	1		
9-2	C901			Cornell Dubilier PM4S5	CAPACITOR, Fixed Mylar, .05µf 400 vdc	1		.25
9-3	C902			Cornell Dubilier PM4P5	CAPACITOR, Fixed Mylar, .05µf 400 vdc	1		.71
9-4	C903			Mallory 20-71937	CAPACITOR, Computer Grade, 4000µf 50 vdc, 2-1/16 x 4-1/2 Alum. can with Acetate Sleeve.	1		10.54
9-5	C904			Fansteel F110-1	CAPACITOR, (Blu-Cap) 10 µf 25 vdc	1		3.64
9-6	L901			U.T.C. HVC-11	INDUCTOR	1		15.12
9-7	N901			MEC TN-134	TRANSISTOR NETWORK	1		46.56
9-8	P901			Cannon DD-50P	PLUG	1		5.85
9-9	Q901			G.E. 2N525	TRANSISTOR	1		4.20
9-10	Q902-Q904			Delco 2N443	TRANSISTOR, (Lug Type Leads) with Mounting Kit #7272602	3		9.31
9-11	R901			MIL RC20GF103K	RESISTOR, Fixed Composition, 10K ±10% 1/2W	1		.17
9-12	R905			MIL RC20GF473K	RESISTOR, Fixed Composition, 47K ±10% 1/2W	1		.17
9-13	R903 R908			MIL RC20GF472K	RESISTOR, Fixed Composition, 4.7K ±10% 1/2W	2		.17
9-14					DELETED			
9-15	R906			Ward Leonard 10F100	RESISTOR, Fixed, Wire wound, 100Ω 10W	1		.80
9-16	R907			MIL RC32GF471K	RESISTOR, Fixed composition, 470Ω ±10% 1W	1		.25
9-17	R908			MIL RC20GF223K	RESISTOR, Fixed composition, 22K ±10% 1/2W	1		.17
9-18	R909			Ward Leonard 10F75	RESISTOR, Fixed, Wire wound, 75Ω 10W	1		.80
9-19	R910			Ward Leonard 5X5	RESISTOR, Fixed Axiohm, 5Ω 5W	1		.85
9-20	R911			MIL RC20GF271K	RESISTOR, Fixed composition, 270Ω ±10% 1/2W	1		.17
9-21	TB901			USECO 1100-B	TERMINAL BOARD	1		3.72
9-22	TJ901-TJ903			H.H. Smith 1501-113	JACK, Wrap Around	3		.44
9-23	XN901			JAN TS101P01	SOCKET, Octal, Mica filled	1		.67

1	2	3		4	5	6	7	8
ITEM NO.	REFER. DESIG-NATOR	CLASS	STOCK NO.	MFG. AND PART NO.	DESCRIPTION 1 2 3 4 5 6 7	UNIT PER ASSY.	PROCURE-MENT CODE	UNIT COST (EST.)
10-1				MEC 77-10A	ASSEMBLY, REFERENCE	1		
10-2	C1001 C1002			Cornell Dubilier PM4S1	CAPACITOR, Fixed Mylar, .01μf 400 vdc	2		
10-3	C1003			Cornell Dubilier PM4P5	CAPACITOR, Fixed Mylar, .5μf 400 vdc	1		
10-4	CR1001			G. E. IN1692	DIODE	1		
10-5	CR1002			Transitron T12G or Clevite CTP-503	DIODE	1		
10-6	I1001			Dialight Corp. S-6	LAMP, Incandescent, 6S6 DC, 24V, Bayonet Base	1		
10-7	K1001			Magnecraft 11HPX-59	RELAY	1		
10-8	M1001			Assembly Prod. 261-C	METER	1		
10-9	N1001			MEC RN-47	RESISTOR NETWORK	1		
10-10	N1002			MEC TN-57	TRANSISTOR NETWORK	1		
10-11	P1001			Cannon DD-50P	PLUG	1		
10-12	R1001 R1005			MIL RC20GF102K	RESISTOR, Fixed composition, 1K ±10% 1/2W	2		
10-13	R1003			MIL RC20GF681K	RESISTOR, Fixed composition, 680Ω ±10% 1/2W	1		
10-14	R1002			MIL RC20GF222K	RESISTOR, Fixed composition, 2200Ω ±10% 1/2W	1		
10-15	R1004			Phaostron CA4RS-1/2	RESISTOR, Precision, 41.9K ±1% 1/2W	1		
10-16	R1006			MIL RC20GF182K	RESISTOR, Fixed composition, 18K ±10% 1/2W	1		
10-17	S1002			Carling 2GL63-73	SWITCH, Toggle (DPDT) on-none-on	1		
10-18	S1001			Micro 2PB11	SWITCH, Pushbutton	1		
10-19	SC1001			Murihead D-845-A	REFERENCE CELL, Weston type	1		
10-20	TJ1001			Cannon DD-50S	CONNECTOR	1		
10-21	XI1001			Dialight Corp. 103-3402-111	INDICATOR HOLDER	1		
10-22	XK1001 XK1002			JAN TS101P01	SOCKET, Octal, Mica filled	2		
10-23	XN1001			Amphenol 77-MIP-11T	SOCKET, 11 Pin	1		

1	2	3		4	5	6	7	8
ITEM NO.	REFER. DESIG-NATOR	CLASS	STOCK NO.	MFG. AND PART NO.	DESCRIPTION 1 2 3 4 5 6 7	UNIT PER ASSY.	PROCURE-MENT CODE	UNIT COST (EST.)
6-1				MEC 77-6A	ASSEMBLY, CONTROL	1		
6-2	CR601 CR603 CR604 CR607			Transitron T12G or Clevite CTP-503	DIODE	4		
6-3	CR605 CR606 CR608			G. E. IN1692	DIODE	3		
6-4	CR602			Hughes HD-6227	DIODE	1		
6-5	K601			MEC RY-11	RELAY, Mercury wetted	1		
6-6	K602 K603			Magnecraft 11HPX-60	RELAY	2		
6-7	K604 K605			Magnecraft 11HPX-59	RELAY	2		
6-8	I601			Dialight Corp. S-6	LAMP, Incandescent, Bayonet Base, 6W 24 vdc	1		
6-9	M601-M603			Assembly Prod. 261-C	METER, Double adjustable contacts for high and low detection, 1 ma coil, 60 Division scale marked 0, 20, 40, 60, 80, 100, 120, with 120 at full scale mark, contacts rated 25 MA DC at 125 vdc.	3		
6-10	N601			MEC TN-58	TRANSISTOR NETWORK	1		
6-11	N602			MEC TN-46	TRANSISTOR NETWORK	1		
6-12	P601			Cannon DD-50P	PLUG	1		
6-13	Q601			Delco 2N553	TRANSISTOR, (Lug Type Leads) with Mounting Kit # 7272602	1		
6-14	R601			Phaostron CA4RS-1/2	RESISTOR, Precision, 299.9K ±1% 1/2W	1		
6-15	R602			MIL RC20GF273K	RESISTOR, Fixed composition, 27K ±10% 1/2W	1		
6-16	R603 R612			MIL RC20GF103K	RESISTOR, Fixed composition, 10K ±10% 1/2W	1		
6-17	R604			Ward Leonard 5X6000	RESISTOR, Fixed Axiohm, 6K 5W	1		
6-18	R605			Phaostron CA4RS-1/2	RESISTOR, Precision, 14.3K ±1% 1/2W	1		
6-19	R606			MIL RC20GF202J	RESISTOR, Fixed composition, 2K ±5% 1/2W	1		
6-20	R607 R610			MIL RC20GF473K	RESISTOR, Fixed composition, 47K ±10% 1/2W	2		
6-21	R608			Phaostron CA4RS-1/2	RESISTOR, Precision, 23.9K ±10% 1/2W	1		
6-22	R614			MIL RC20GF101K	RESISTOR, Fixed composition, 100Ω ±10% 1/2W	1		
6-23	R611			MIL RC20GF183K	RESISTOR, Fixed composition, 18K ±10% 1/2W	1		
6-24	R613 R615			MIL RC20GF102K	RESISTOR, Fixed composition, 1K ±10% 1/2W	2		
6-25	R609 R616			MIL RC20GF472K	RESISTOR, Fixed composition, 4700Ω ±10% 1/2W	2		

1	2	3		4	5	6	7	8
ITEM NO.	REFER. DESIG-NATOR	CLASS	STOCK NO.	MFG. AND PART NO.	DESCRIPTION 1 2 3 4 5 6 7	UNIT PER ASSY.	PROCURE-MENT CODE	UNIT COST (EST.)
6-26	S601-S603			Micro 2PB11	SWITCH, Push button	3		
6-27	S604 S605			Carling ST52N	SWITCH, DPDT, (Nickel plated Handle) 25 Amp 125V	2		
6-28	TJ601 TJ602			H.H. Smith 1501-103	JACK, Test, Wrap around	2		
6-29	XI601			Dialight Corp. 103-3402-111	INDICATOR HOLDER	1		
6-30	XK601-XK605, XN601 XN602			JAN TS101P01	SOCKET, Octal, Mica filled	7		
6-31				Birtcher 3B-645	RADIATOR, Power Transistor	1		
4-1				MEC 165-4C	ASSEMBLY, POWER SUPPLY	1		
4-2	C401 C402 C421-C423			Mallory 20-71937	CAPACITOR, Computer Grade, 4000μf 60 vdc, 2-1/16 x 4-1/2, Alum. can with acetate sleeve.	5		
4-3	C403 C425 C443 C444			Cornell Dubilier PM4S1	CAPACITOR, Fixed, Mylar, .01μf 400 vdc	4		
4-4	C424			Cornell Dubilier PM4P1	CAPACITOR, Fixed, Mylar, .1μf 400 vdc	1		
4-5	C404 C426			Fansteel F308-1	CAPACITOR, Blu-cap, 100μf 30 vdc	2		
4-6	C441 C442			Mallory 20-71855	CAPACITOR, Computer Grade, 2000μf 100 vdc, 2-1/16 x 4-1/2, Alum. can with acetate sleeve.	2		
4-7	C445			Fansteel F316-1	CAPACITOR, Blu-cap, 30μf 100 vdc	1		
4-8	CR401 CR421			G.E. 4JA211AB1AC2	RECTIFIER	3		
4-9	CR402 CR422			International Rectifier IN1519	DIODE, Zener (1Z4.7)	2		
4-10	CR442			International Rectifier IN1524	DIODE, Zener (1Z12)	1		
4-11	F401 F403			Bussmann AGC	FUSE, 1 Amp	2		
4-12	F402			Bussmann AGC	FUSE, 3 Amp	1		

1	2	3		4	5	6	7	8
ITEM NO.	REFER. DESIG-NATOR	CLASS	STOCK NO.	MFG. AND PART NO.	DESCRIPTION 1 2 3 4 5 6 7	UNIT PER ASSY.	PROCURE-MENT CODE	UNIT COST (EST.)
4-13	F404			Bussmann MDX	FUSE, Fusetron, Slo-Blow, 3 Amp.	1		
4-14	P401			Cannon DD-50P	PLUG	1		
4-15	Q423 Q442			Delco 2N553	TRANSISTOR, (Mount with Parts #100 & #101)	2		
4-16	Q401 Q421 Q441 Q422			Delco 2N443	TRANSISTOR, (Lug type Leads)	4		
4-17	Q402 Q403 Q424 Q443			G. E. 2N525	TRANSISTOR	4		
4-18	Q404 Q425 Q444			Sylvania 2N377A	TRANSISTOR	3		
4-19	R401, R402 R421A R421B R441 R442			Ward Leonard 5X1	RESISTOR, Axiohm, 1Ω 5W	6		
4-20	R403 R443			Ward Leonard 5X2	RESISTOR, Axiohm, 2Ω 5W	2		
4-21	R404 R425 R444			MIL RC42GF102K	RESISTOR, Fixed composition, 1K ±10% 2W	3		
4-22	R405			MIL RC42GF151K	RESISTOR, Fixed composition, 150Ω ±10% 2W	1		
4-23	R406			MIL RC20GF681K	RESISTOR, Fixed composition, 680Ω ±10% 1/2W	1		
4-24	R407 R428 R447			MIL RC20GF101K	RESISTOR, Fixed composition, 100Ω ±10% 1/2W	3		
4-25	R408			MIL RC20GF122K	RESISTOR, Fixed composition, 1.2K ±10% 1/2W	1		
4-26	R409 R430 R449			MIL RC20GF822K	RESISTOR, Fixed composition, 8.2K ±10% 1/2W	3		
4-27	R410 R431 R450			MIL RC20GF621J	RESISTOR, Fixed composition, 620Ω ±5% 1/2W	3		
4-28	R411 R432			MIL RC20GF472K	RESISTOR, Fixed composition, 4.7K ±10% 1/2W	2		
4-29	R412			MIL RC32GF121K	RESISTOR, Fixed composition, 120Ω ±10% 1W	1		
4-30	R414 R435			Chicago Tel. RA20LASB250A	POTENTIOMETER, 25Ω 2W	2		
4-31	R415			MIL RC32GF820J	RESISTOR, Fixed composition, 82Ω ±5% 1W	1		
4-32	R413			MIL RC42GF131J	RESISTOR, Fixed composition, 130Ω ±5% 2W	1		
4-33	R422			Ward Leonard 10F1	RESISTOR, Fixed, Wire wound, 1Ω 10W	1		
4-34	R423 R424			Ward Leonard 10F2	RESISTOR, Fixed, Wire wound, 2Ω 10W	2		

1	2	3		4	5	6	7	8
ITEM NO.	REFER. DESIG-NATOR	CLASS	STOCK NO.	MFG. AND PART NO.	DESCRIPTION 1 2 3 4 5 6 7	UNIT PER ASSY.	PROCURE-MENT CODE	UNIT COST (EST.)
4-35	R426 R437			Ward Leonard 10F150	RESISTOR, Fixed, Wire wound, 150Ω 10W	2		
4-36	R427 R446			MIL RC32GF681K	RESISTOR, Fixed composition, 680Ω ±10% 1W	2		
4-37	R429 R448			MIL RC32GF122K	RESISTOR, Fixed composition, 1.2K ±10% 1W	2		
4-38	R433 R416			MIL RC42GF271K	RESISTOR, Fixed composition, 270Ω ±10% 2W	2		
4-39	R436			MIL RC32GF510J	RESISTOR, Fixed composition, 51Ω ±5% 1W	1		
4-40	R434			MIL RC42GF181J	RESISTOR, Fixed composition, 180Ω ±5% 2W	1		
4-41	R451			MIL RC42GF302J	RESISTOR, Fixed composition, 3K ±5% 2W	1		
4-42	R453			Allen Bradley JLU-1011 or JA1L040S101UC	POTENTIOMETER, 100Ω 2W, Linear Taper	1		
4-43	R454			MIL RC42GF272J	RESISTOR, Fixed composition, 2.7K ±5% 2W	1		
4-44	R455			Ward Leonard 5X500	RESISTOR, Fixed, Axiohm, 500Ω 5W	1		
4-45	R452			MIL RC32GF561J	RESISTOR, Fixed composition, 560Ω ±5% 1W	1		
4-46	R445			Ward Leonard 10F250	RESISTOR, Fixed, Wire wound, 250Ω 10W	1		
4-47	T401			TTI 5486	TRANSFORMER	1		
4-48	TJ401- TJ404			H.H. Smith 221	JACK, Midget Banana (Black)	4		
4-49	XF401- XF404			Bussmann HKP	FUSEHOLDER	4		
1				McLean 2EB508C	ASSEMBLY, BLOWER	1		

CHAPTER VI

WIRE LIST

POWER SUPPLY "A" J1
(+250V)

WIRE NO.	TERMINAL	DESTINATION	CABLE	IDENTIFICATION	WIRE SIZE	COLOR
	1	J28-B	1	120VAC Common	18	W
	2	J2-2	1	120VAC Common	18	W
	3					
	4					
	5					
	6					
	7					
	8					
	9	J5-14	1	Fil #1A	20'	BR
	10	J7-15	1	Fil #1A	20"	BR
	11					
	12					
	13	± - 1	1	±	20	BK
	14			±		
	15					
	16	J3-14	1	-250V (A)	22	W
	17					
	18					
	19					
	20					
	21					
	22					
	23					
	24					
	25					

NOTES: (') Twisted pair
(") Twisted pair

POWER SUPPLY "A" J1
(+250V)

WIRE NO.	TERMINAL	DESTINATION	CABLE	IDENTIFICATION	WIRE SIZE	COLOR
	26	± - 14	1	Fil #1 CT (Gnd)	20	BK
	27			Fil #1 CT (Gnd)		
	28					
	29					
	30					
	31					
	32	J2-32	1	120VAC $Ø_2$ Switched	18	W-S
	33	J23-24	1	120VAC $Ø_2$ Switched	18	W/S
	34					
	35					
	36	J23-22	1	120VAC $Ø_1$ Switched	18	S
	37	J2-37	1	120VAC $Ø_1$ Switched	18	S
	38					
	39					
	40					
	41					
	42	J5-16	1	Fil #1B	20'	W/BR
	43	J7-17	1	Fil #1B	20"	W/BR
	44					
	45					
	46					
	47	J23-34	1	+250V (A)	20	R
	48	J12-48	1	+250V (A)	22	R
	49					
	50	Frame		Chassis Ground	22	BK

NOTES:

J1
POWER SUPPLY "A"
(+250V)

WIRE NO.	TERMINAL	DESTINATION	CABLE	IDENTIFICATION	WIRE SIZE	COLOR
	1					
	2					
	9					
	10					
	13					
	14					
	26					
	27					
	32					
	33					
	36					
	37					
	42					
	43					
	47					
	48					

NOTES: JUMPER CONNECTIONS

J2
POWER SUPPLY "B" (+250V)

WIRE NO.	TERMINAL	DESTINATION	CABLE	IDENTIFICATION	WIRE SIZE	COLOR
	1	J3-1	1	120VAC Common	18	W
	2	J1-2	1	120VAC Common	18	W
	3					
	4					
	5					
	6					
	7					
	8					
	9	J13-14	1	Fil #2A	20'	BR
	10	J15-15	1	Fil #2A	20"	BR
	11					
	12					
	13	± - 2	1	±	20	BK
	14			±		
	15					
	16	J4-14	1	-250V (B)	22	W
	17					
	18					
	19					
	20					
	21					
	22					
	23					
	24					
	25					

NOTES: (') Twisted pair
(") Twisted pair

J2
POWER SUPPLY "B"
(+250V)

WIRE NO.	TERMINAL	DESTINATION	CABLE	IDENTIFICATION	WIRE SIZE	COLOR
	26	± - 15	1	Fil #2CT (Gnd)	20	BK
	27			Fil #2CT (Gnd)		
	28					
	29					
	30					
	31					
	32	J1-32	1	120VAC $Ø_2$ Switched	18	W/S
	33			120VAC $Ø_2$ Switched		
	34					
	35					
	36			120VAC $Ø_1$ Switched		
	37	J1-37	1	120VAC $Ø_1$ Switched	18	S
	38					
	39					
	40					
	41					
	42	J13-16	1	Fil #2B	20'	W/BR
	43	J15-17	1	Fil #2B	20"	W/BR
	44					
	45					
	46					
	47	J23-35	1	+250V (B)	20	R
	48	J12-31	1	+250V (B)	22	R
	49					
	50	Frame		Chassis Ground	22	BK

NOTES: (') Twisted pair
(") Twisted pair

J2
POWER SUPPLY "B"
(+250V)

WIRE NO.	TERMINAL	DESTINATION	CABLE	IDENTIFICATION	WIRE SIZE	COLOR
	1					
	2					
	9					
	10					
	13					
	14					
	26					
	27					
	32					
	33					
	36					
	37					
	42					
	43					
	47					
	48					

NOTES: JUMPER CONNECTIONS

J3
POWER SUPPLY "A"
(-250V, -560V)

WIRE NO.	TERMINAL	DESTINATION	CABLE	IDENTIFICATION	WIRE SIZE	COLOR
	1	J2-1	1	120VAC Common	18	W
	2	J4-2	1	120VAC Common	20	W
	3					
	4					
	5					
	6					
	7					
	8					
	9	J5-45	1	Fil #3A	20#	BR
	10	J7-46	1	Fil #3A	20*	BR
	11					
	12					
	13	J23-36	1	-250V (A)	20	W
	14	J1-16	1	-250V (A)	22	W
	15	J12-49	1	-250V (A)	22	W
	16	J12-50	1	-560V (A)	22	V
	17	J23-38	1	-560V (A)	22	V
	18					
	19					
	20					
	21					
	22					
	23					
	24					
	25					

NOTES: # Twisted triple
* Twisted triple

J3
POWER SUPPLY "A"
(-250V, -560V)

WIRE NO.	TERMINAL	DESTINATION	CABLE	IDENTIFICATION	WIRE SIZE	COLOR
	26	J5-47	1	Fil #3 CT (-125V)	20#	W
	27	J7-48	1	Fil #3 CT (-125V)	20*	W
	28					
	29					
	30					
	31					
	32	J4-32	1	120VAC $\emptyset_2$ Switched	18	W/S
	33	J12-16	1	120VAC $\emptyset_2$ Switched	22	W/S
	34					
	35					
	36	J23-23	1	120VAC $\emptyset_1$ Switched	18	S
	37	J4-37	1	120VAC $\emptyset_1$ Switched	18	S
	38					
	39					
	40					
	41					
	42	J5-49	1	Fil #3B	20#	W/BR
	43	J7-50	1	Fil #3B	20*	W/BR
	44					
	45					
	46					
	47	± - 3	1	±	20	BK
	48			±		
	49					
	50	Frame		Chassis Ground	22	BK

NOTES: # Twisted triple
* Twisted triple

J3

POWER SUPPLY "A"
(-250V, -560V)

WIRE NO.	TERMINAL	DESTINATION	CABLE	IDENTIFICATION	WIRE SIZE	COLOR
	1					
	2					
	13					
	14					
	15					
	16					
	17					
	9					
	10					
	26					
	27					
	32					
	33					
	36					
	37					
	42					
	43					
	47					
	48					

NOTES: JUMPER CONNECTIONS

J4

POWER SUPPLY "B"
(-250V, -560V)

WIRE NO.	TERMINAL	DESTINATION	CABLE	IDENTIFICATION	WIRE SIZE	COLOR
	1			120VAC Common		
	2	J3-2	1	120VAC Common	20	W
	3					
	4					
	5					
	6					
	7					
	8					
	9	J13-45	1	Fil #4A	20#	BR
	10	J15-46	1	Fil #4A	20*	BR
	11					
	12					
	13	J23-37	1	-250V (B)	20	W
	14	J2-16	1	-250V (B)	22	W
	15	J12-32	1	-250V (B)	22	W
	16	J12-33	1	-560V (B)	22	V
	17	J23-39	1	-560V (B)	22	V
	18					
	19					
	20					
	21					
	22					
	23					
	24					
	25					

NOTES: # twisted triple
* twisted triple

POWER SUPPLY "B" J4
(-250V, -560V)

WIRE NO.	TERMINAL	DESTINATION	CABLE	IDENTIFICATION	WIRE SIZE	COLOR
	26	J13-47	1	Fil #4CT (-125V)	20#	W
	27	J15-48	1	Fil #4CT (-125V)	20*	W
	28					
	29					
	30					
	31					
	32	J3-32	1	120VAC ϕ_2 Switched	18	W/S
	33	J25-4	1	120VAC ϕ_2 Switched	18	W/S
	34					
	35					
	36	J12-17	1	120VAC ϕ_1 Switched	22	S
	37	J3-37	1	120VAC ϕ_1 Switched	18	S
	38	BL-1	1	120VAC ϕ_1 Switched	18	S
	39					
	40					
	41					
	42	J13-49	1	Fil #4B	20#	W/BR
	43	J15-50	1	Fil #4B	20*	W/BR
	44					
	45					
	46					
	47	± - 4	1	±	20	BK
	48			±		
	49					
	50	Frame		Chassis Ground	22	BK

NOTES: # Twisted triple
* Twisted triple

POWER SUPPLY "B" J4
(-250V, -560V)

WIRE NO.	TERMINAL	DESTINATION	CABLE	IDENTIFICATION	WIRE SIZE	COLOR
	36–37–38					
	13–14–15					
	16–17					
	1–2					
	9–10					
	26–27					
	32–33					
	42–43					
	47–48					

NOTES:

JUMPER CONNECTIONS

J5 (CHAN 1)

DC AMPS #1 & #2

WIRE NO.	TERMINAL	DESTINATION	CABLE	IDENTIFICATION	WIRE SIZE	COLOR
	1	J9-2	Direct	Input, Amp A (#1)	Coax	
	2			HQ Ground		
	3					
	4	J9-4	Direct	Output, Amp A (#1)	22	W/BR
	5			Boost, Amp A		
	6	J9-37	Direct	Output, Amp B (#2)	20	BR
	7			Boost, Amp B		
	8					
	9	-560-2	1	-560V	22	V
	10			-560V		
	11					
	12	+250-2	1	+250V	22	R
	13			+250V		
	14	J1-9	1	Fil #1A	20'	BR
	15	J6-15	1	Fil #1A	20"	BR
	16	J1-42	1	Fil #1B	20'	W/BR
	17	J6-17	1	Fil #1B	20"	W/BR
	18	HQ-6	2	HQ Ground	20	BK
	19					
	20					
	21					
	22					
	23					
	24					
	25					

NOTES: (') Twisted pair
(") Twisted pair

J5 (CHAN 1)

DC AMPS #1 & #2

WIRE NO.	TERMINAL	DESTINATION	CABLE	IDENTIFICATION	WIRE SIZE	COLOR
	26					
	27					
	28					
	29					
	30					
	31					
	32					
	33					
	34	J9-35	Direct	Input, Amp B (#2)	Coax	
	35	Frame		Chassis Ground	22	BK
	36			Overload, Amp B		
	37	± - 5	1	±	20	BK
	38			Overload, Amp A		
	39	-250-2	1	-250V	22	W
	40			-250V		
	41	J21-47	1	Chopper Drive (Hot)	22'	BR
	42	J6-42	1	Chopper Drive (Hot)	22"	BR
	43	J21-46	1	Chopper Drive (Gnd)	22'	W/BR
	44	J6-44	1	Chopper Drive (Gnd)	22"	W/BR
	45	J3-9	1	Fil #3A	20#	BR
	46	J6-46	1	Fil #3A	20*	BR
	47	J3-26	1	Fil #3CT } at -125V	20#	W
	48	J6-48	1	Fil #3CT } at -125V	20*	W
	49	J3-42	1	Fil #3B	20#	W/BR
	50	J6-50	1	Fil #3B	20*	W/BR

NOTES: # twisted triple
* twisted triple
' twisted pair
" twisted pair

J5 (CHAN 1)

DC AMPS #1 & #2

WIRE NO.	TERMINAL	DESTINATION	CABLE	IDENTIFICATION	WIRE SIZE	COLOR
	2					
	18					
	9					
	10					
	12					
	13					
	14					
	15					
	16					
	17					
	36					
	37					
	38					
	39					
	40					
	41					
	42					
	43					
	44					
	45					
	46					
	47					
	48					
	49					
	50					

NOTES: JUMPER CONNECTIONS

J6 (CHAN 2)
DC AMPS #3 & #4

WIRE NO.	TERMINAL	DESTINATION	CABLE	IDENTIFICATION	WIRE SIZE	COLOR
	1	J10-2	Direct	Input, Amp A (#3)	Coax	
	2			HQ Ground		
	3					
	4	J10-4	Direct	Output, Amp A (#3)	22	W/R
	5			Boost, Amp A		
	6	J10-37	Direct	Output, Amp B (#4)	20	R
	7			Boost, Amp B		
	8					
	9	-560-3	1	-560V	22	V
	10			-560V		
	11					
	12	+250-3	1	+250V	22	R
	13			+250V		
	14			Fil #1A		
	15	J5-15	1	Fil #1A	20"	BR
	16			Fil #1B		
	17	J5-17	1	Fil #1B	20"	W/BR
	18	HQ-7	2	HQ Ground	20	BK
	19					
	20					
	21					
	22					
	23					
	24					
	25					

NOTES: (") twisted pair

J6 (CHAN 2)
DC AMPS #3 & #4

WIRE NO.	TERMINAL	DESTINATION	CABLE	IDENTIFICATION	WIRE SIZE	COLOR
	26					
	27					
	28					
	29					
	30					
	31					
	32					
	33					
	34	J10-35	Direct	Input, Amp B (#4)	Coax	
	35	Frame		Chassis Ground	22	BK
	36			Overload, Amp B		
	37	± - 6	1	±	20	BK
	38			Overload, Amp A		
	39	-250-3	1	-250V	22	W
	40			-250V		
	41	J7-41	1	Chopper Drive (Hot)	22'	BR
	42	J5-42	1	Chopper Drive (Hot)	22"	BR
	43	J7-43	1	Chopper Drive (Gnd)	22'	W/BR
	44	J5-44	1	Chopper Drive (Gnd)	22"	W/BR
	45			Fil #3A		
	46	J5-46	1	Fil #3A	20*	BR
	47			Fil #3CT } at -125V		
	48	J5-48	1	Fil #3CT } at -125V	20*	W
	49			Fil #3B		
	50	J5-50	1	Fil #3B	20*	W/BR

NOTES: (*) twisted triple
(') twisted pair
(") twisted pair

J6 (CHAN 2)
DC AMPS #3 & #4

WIRE NO.	TERMINAL	DESTINATION	CABLE	IDENTIFICATION	WIRE SIZE	COLOR
	2					
	18					
	9					
	10					
	12					
	13					
	14					
	15					
	16					
	17					
	36					
	37					
	38					
	39					
	40					
	41					
	42					
	43					
	44					
	45					
	46					
	47					
	48					
	49					
	50					

NOTES: JUMPER CONNECTIONS

J7 (CHAN 3)

DC AMPS #5 & #6

WIRE NO.	TERMINAL	DESTINATION	CABLE	IDENTIFICATION	WIRE SIZE	COLOR
	1	J11-2	Direct	Input, Amp A (#5)	Coax	
	2			HQ Ground		
	3					
	4	J11-4	Direct	Output, Amp A (#5)	22	W/O
	5			Boost, Amp A		
	6	J11-37	Direct	Output, Amp B (#6)	20	O
	7			Boost, Amp B		
	8					
	9	-560-4	1	-560V	22	V
	10			-560V		
	11					
	12	+250-4	1	+250V	22	R
	13			+250V		
	14	J8-14	1	Fil #1A	20'	BR
	15	J1-10	1	Fil #1A	20"	BR
	16	J8-16	1	Fil #1B	20'	W/BR
	17	J1-43	1	Fil #1B	20"	W/BR
	18	HQ-8	2	HQ Ground	20	BK
	19					
	20					
	21					
	22					
	23					
	24					
	25					

NOTES: (') twisted pair
(") twisted pair

J7 (CHAN 3)

DC AMPS #5 & #6

WIRE NO.	TERMINAL	DESTINATION	CABLE	IDENTIFICATION	WIRE SIZE	COLOR
	26					
	27					
	28					
	29					
	30					
	31					
	32					
	33					
	34	J11-35	Direct	Input, Amp B (#6)	Coax	
	35	Frame		Chassis Ground	22	BK
	36			Overload, Amp B		
	37	± - 7	1	±	20	BK
	38			Overload, Amp A		
	39	-250-4	1	-250V	22	W
	40			-250V		
	41	J6-41	1	Chopper Drive (Hot)	22'	BR
	42	J8-42	1	Chopper Drive (Hot)	22"	BR
	43	J6-43	1	Chopper Drive (Gnd)	22'	W/BR
	44	J8-44	1	Chopper Drive (Gnd)	22"	W/BR
	45	J8-45	1	Fil #3A	20*	BR
	46	J3-10	1	Fil #3A	20*	BR
	47	J8-47	1	Fil #3CT } at -125V	20*	W
	48	J3-27	1	Fil #3CT } at -125V	20*	W
	49	J8-49	1	Fil #3B	20*	W/BR
	50	J3-43	1	Fil #3B	20*	W/BR

NOTES: *twisted triple
*twisted triple
' twisted pair
" twisted pair

J7 (CHAN 3) DC AMPS #5 & #6

WIRE NO.	TERMINAL	DESTINATION	CABLE	IDENTIFICATION	WIRE SIZE	COLOR
	2–18					
	9–10					
	12–13					
	14–15					
	16–17					
	36–37–38					
	39–40					
	41–42					
	43–44					
	45–46					
	47–48					
	49–50					

NOTES: JUMPER CONNECTIONS

J8 REFERENCE DC AMPS #7 & #8

WIRE NO.	TERMINAL	DESTINATION	CABLE	IDENTIFICATION	WIRE SIZE	COLOR
	1	J22-2	2	Input, Amp A (#7)	Coax	
	2			HQ Ground		
	3					
	4	-Ref - 1	2	Output, Amp A (#7) (-Ref V. output) Boost, Amp A	20	W/V
	5					
	6	4K 10W TP +Ref-1 .25MFD.	2	Output, Amp B (#8) (+Ref V. output) Boost, Amp B	20	W/R
	7					
	8					
	9	-560-5	1	-560V	22	V
	10			-560V		
	11					
	12	+250-5	1	+250V	22	R
	13			+250V		
	14	J7-14	1	Fil #1A	20'	BR
	15			Fil #1A		
	16	J7-16	1	Fil #1B	20'	W/BR
	17			Fil #1B		
	18	HQ-9	2	HQ Ground	20	BK
	19					
	20					
	21					
	22					
	23					
	24					
	25					

NOTES: (') twisted pair

Rev. 6/15/61

J8
REFERENCE
DC AMPS
#7 & #8

WIRE NO.	TERMINAL	DESTINATION	CABLE	IDENTIFICATION	WIRE SIZE	COLOR
	26					
	27					
	28					
	29					
	30					
	31					
	32					
	33					
	34	J22-35	2	Input, Amp B (#8)	Coax	
	35	Frame		Chassis Ground	22	BK
	36			Overload, Amp B		
	37	± - 8	1	±	20	BK
	38			Overload, Amp A		
	39	-250-5	1	-250V	22	W
	40			-250V		
	41	J13-41	1	Chopper Drive (Hot)	22'	BR
	42	J7-42	1	Chopper Drive (Hot)	22"	BR
	43	J13-43	1	Chopper Drive (Gnd)	22'	W/BR
	44	J7-44	1	Chopper Drive (Gnd)	22"	W/BR
	45	J7-45	1	Fil #3A	20#	BR
	46			Fil #3A		
	47	J7-47	1	Fil #3CT } at -125V	20#	W
	48			Fil #3CT } at -125V		
	49	J7-49	1	Fil #3B	20#	W/BR
	50			Fil #3B		

NOTES:
twisted triple
' twisted pair
" twisted pair

J8
REFERENCE DC AMPS
#7 & #8

WIRE NO.	TERMINAL	DESTINATION	CABLE	IDENTIFICATION	WIRE SIZE	COLOR
	2					
	18					
	9					
	10					
	12					
	13					
	14					
	15					
	16					
	17					
	36					
	37					
	38					
	39					
	40					
	41					
	42					
	43					
	44					
	45					
	46					
	47					
	48					
	49					
	50					

NOTES: JUMPER CONNECTIONS

J9 (CHAN 1)

DATA SUMMING

WIRE NO.	TERMINAL	DESTINATION	CABLE	IDENTIFICATION	WIRE SIZE	COLOR
	1	Frame		Chassis Ground	22	BK
	2	J5-1	Direct	Input Amp #1	Coax	
	3			Chassis Ground		
	4	J5-4	Direct	Output Amp #1	22	W-BR
	5					
	6					
	7	J23-33	3	Holding Relay Signal	22	W-BL
	8	J29-E	3	Bit #10 (512) (MSB)	22	W-BK
	9	J29-5	3	Bit #9 (256)		W
	10	J29-D	3	Bit #8 (128)		S
	11	J29-4	3	Bit #7 (64) Analog Channel #1		V
	12	J29-C	3	Bit #6 (32)		BL
	13	J29-3	3	Bit #5 (16)		G
	14	J29-B	3	Bit #4 (8)		Y
	15	J29-2	3	Bit #3 (4)		O
	16	J29-A	3	Bit #2 (2)		R
	17	J29-1	3	Bit #1 (1) (LSB)	22	BR
	18			Chassis Ground		
	19			Chassis Ground		
	20			Chassis Ground		
	21					
	22					
	23					
	24	J10-24	3	Holding Relay Signal	22	W-BL
	25					

NOTES:

J9 (CHAN 1)

DATA SUMMING

WIRE NO.	TERMINAL	DESTINATION	CABLE	IDENTIFICATION	WIRE SIZE	COLOR
	26					
	27					
	28					
	29					
	30					
	31					
	32					
	33	+ Ref-5	2	+ Ref Voltage	20	W-R
	34			Chassis Ground		
	35	J5-34	Direct	Input Amp #2	Coax	
	36			Chassis Ground		
	37	J5-6	Direct	Output Amp #2	20	BR
	38	J12-1	2	Output Amp #2 (Analog Output #1)	20	BR
	39					
	40					
	41					
	42					
	43					
	44	+12-2	1	+12V	20	R
	45	0V-3	1	0V	20	BK
	46			0V		
	47					
	48					
	49					
	50	-85-2	1	-85V	22	W-BK

NOTES:

J9 (CHAN 1)

DATA SUMMING

WIRE NO.	TERMINAL	DESTINATION	CABLE	IDENTIFICATION	WIRE SIZE	COLOR
	7					
	24					
	37					
	38					

NOTES: JUMPER CONNECTIONS

J10 (CHAN 2)

DATA SUMMING

WIRE NO.	TERMINAL	DESTINATION	CABLE	IDENTIFICATION		WIRE SIZE	COLOR
	1	Frame		Chassis Ground		22	BK
	2	J6-1	Direct	Input Amp #3		Coax	
	3			Chassis Ground			
	4	J6-4	Direct	Output Amp #3		22	W-R
	5						
	6						
	7	J11-7	3	Holding Relay Signal		22	W-BL
	8	J29-J	3	Bit #10 (512)	(MSB)	22	W-BK
	9	J29-10	3	Bit #9 (256)			W
	10	J29-I	3	Bit #8 (128)			S
	11	J29-9	3	Bit #7 (64)	Analog Channel #2		V
	12	J29-H	3	Bit #6 (32)			BL
	13	J29-8	3	Bit #5 (16)			G
	14	J29-G	3	Bit #4 (8)			Y
	15	J29-7	3	Bit #3 (4)			O
	16	J29-F	3	Bit #2 (2)			R
	17	J29-6	3	Bit #1 (1)	(LSB)	22	BR
	18			Chassis Ground			
	19			Chassis Ground			
	20			Chassis Ground			
	21						
	22						
	23						
	24	J9-24	3	Holding Relay Signal		22	W-BL
	25						

NOTES:

J10 (CHAN 2)

DATA SUMMING

WIRE NO.	TERMINAL	DESTINATION	CABLE	IDENTIFICATION	WIRE SIZE	COLOR
	26					
	27					
	28					
	29					
	30					
	31					
	32					
	33	+ Ref-6	2	+ Ref Voltage	20	W-R
	34			Chassis Ground		
	35	J6-34	Direct	Input Amp #4	Coax	
	36			Chassis Ground		
	37	J6-6	Direct	Output Amp #4	20	R
	38	J12-2	2	Output Amp #4 (Analog Output #2)	20	R
	39					
	40					
	41					
	42					
	43					
	44	+12-3	1	+12V	20	R
	45	0V-4	1	0V	20	BK
	46			0V		
	47					
	48					
	49					
	50	-85-3	1	-85V	22	W-BK

NOTES:

J10 (CHAN 2)

DATA SUMMING

WIRE NO.	TERMINAL	DESTINATION	CABLE	IDENTIFICATION	WIRE SIZE	COLOR
	7					
	24					
	37					
	38					

NOTES:

JUMPER CONNECTIONS

J11 (CHAN 3)

DATA SUMMING

WIRE NO.	TERMINAL	DESTINATION	CABLE	IDENTIFICATION	WIRE SIZE	COLOR
	1	Frame		Chassis Ground	22	BK
	2	J7-1	Direct	Input Amp #5	Coax	
	3			Chassis Ground		
	4	J7-4	Direct	Output Amp #5	22	W-O
	5					
	6					
	7	J10-7	3	Holding Relay Signal	22	W-BL
	8	J29-0	3	Bit #10 (512) (MSB)	22	W-BK
	9	J29-15	3	Bit #9 (256)		W
	10	J29-N	3	Bit #8 (128)		S
	11	J29-14	3	Bit #7 (64) Analog Channel #3		V
	12	J29-M	3	Bit #6 (32)		BL
	13	J29-13	3	Bit #5 (16)		G
	14	J29-L	3	Bit #4 (8)		Y
	15	J29-12	3	Bit #3 (4)		O
	16	J29-K	3	Bit #2 (2)		R
	17	J29-11	3	Bit #1 (1) (LSB)	22	BR
	18			Chassis Ground		
	19			Chassis Ground		
	20			Chassis Ground		
	21					
	22					
	23					
	24	J17-24	3	Holding Relay Signal	22	W-BL

NOTES:

J11 (CHAN 3)

DATA SUMMING

WIRE NO.	TERMINAL	DESTINATION	CABLE	IDENTIFICATION	WIRE SIZE	COLOR
	26					
	27					
	28					
	29					
	30					
	31					
	32					
	33	+ Ref-7	2	+ Ref Voltage	20	W-R
	34			Chassis Ground		
	35	J7-34	Direct	Input Amp #6	Coax	
	36			Chassis ground		
	37	J7-6	Direct	Output Amp #6	20	O
	38	J12-3	2	Output Amp #6 (Analog Output #3)	20	O
	39					
	40					
	41					
	42					
	43					
	44	+12-4	1	+12V	20	R
	45	OV-5	1	OV	20	BK
	46			OV		
	47					
	48					
	49					
	50	-85-4	1	-85V	22	W-BK

NOTES:

J11 (CHAN 3)

DATA SUMMING

WIRE NO.	TERMINAL	DESTINATION	CABLE	IDENTIFICATION	WIRE SIZE	COLOR
	7					
	24					
	37					
	38					

NOTES:

JUMPER CONNECTIONS

J12

MONITOR

WIRE NO.	TERMINAL	DESTINATION	CABLE	IDENTIFICATION	WIRE SIZE	COLOR
	1	J9-38	2	#1	20	BR
	2	J10-38	2	#2	20	R
	3	J11-38	2	#3 Analog	20	O
	4	J17-38	2	#4 Outputs	20	Y
	5	J18-38	2	#5	20	G
	6	J19-38	2	#6	20	BL
	7	J20-38	2	#7	20	V
	8					
	9					
	10	Frame		Chassis Ground	22	BK
	11					
	12	±-9	1	±	20	BK
	13	0V-6	1	0V	20	BK
	14	J16-41	1	Chopper Drive (Hot)	22	BR
	15	J25-1	1	120VAC Common	22	W
	16	J3-33	1	120VAC $Ø_2$ Switched	22	W-S
	17	J4-36	1	120VAC $Ø_1$ Switched	22	S
	18	J26-L	2	#1	20	BR
	19	J26-A	2	#2	20	R
	20	J26-J	2	#3 Analog	20	O
	21	J26-V	2	#4 Outputs	20	Y
	22	J26-C	2	#5	20	G
	23	J26-G	2	#6	20	BL
	24	J26-E	2	#7	20	V
	25					

NOTES:

J12

MONITOR

WIRE NO.	TERMINAL	DESTINATION	CABLE	IDENTIFICATION	WIRE SIZE	COLOR
	26					
	27					
	28	J25-43	1	+12V (B)	22	R
	29	J25-47	1	-20V (B)	22	S
	30	J25-32	1	-85V (B)	22	W-BK
	31	J2-48	1	+250V (B)	22	R
	32	J4-15	1	-250V (B)	22	W
	33	J4-16	1	-560V (B)	22	V
	34	- Ref-4	2	- Ref Voltage	22	W-V
	35	+ Ref-4	2	+ Ref Voltage	22	W-R
	36	HQ-5	2	H.Q. Ground	20	BK
	37					
	38					
	39					
	40					
	41					
	42					
	43					
	44					
	45	J24-43	1	+12V (A)	22	R
	46	J24-47	1	-20V (A)	22	S
	47	J24-32	1	-85V (A)	22	W-BK
	48	J1-48	1	+250V (A)	22	R
	49	J3-15	1	-250V (A)	22	W
	50	J3-16	1	-560V (A)	22	V

NOTES:

J12

MONITOR

WIRE NO.	TERMINAL	DESTINATION	CABLE	IDENTIFICATION	WIRE SIZE	COLOR
	1					
	18					
	2					
	19					
	3					
	20					
	4					
	21					
	5					
	22					
	6					
	23					
	7					
	24					

NOTES:

JUMPER CONNECTIONS

J13 (CHAN 4)

DC AMPS #9 & #10

WIRE NO.	TERMINAL	DESTINATION	CABLE	IDENTIFICATION	WIRE SIZE	COLOR
	1	J17-2	Direct	Input, Amp A (#9)	Coax	
	2			H.Q. Ground		
	3					
	4	J17-4	Direct	Output, Amp A (#9)	22	W-Y
	5			Boost, Amp A		
	6	J17-37	Direct	Output, Amp B (#10)	20	Y
	7			Boost, Amp B		
	8					
	9	-560-6	1	-560V	22	V
	10			-560V		
	11					
	12	+250-6	1	+250V	22	R
	13			+250V		
	14	J2-9	1	Fil #2A	20'	BR
	15	J14-15	1	Fil #2A	20"	BR
	16	J2-42	1	Fil #2B	20'	W-BR
	17	J14-17	1	Fil #2B	20"	W-BR
	18	HQ-10	2	H.Q. Ground	20	BK
	19					
	20					
	21					
	22					
	23					
	24					
	25					

NOTES: (') Twisted pair.
(") Teisted pair

J13 (CHAN 4)

DC AMPS #9 & #10

WIRE NO.	TERMINAL	DESTINATION	CABLE	IDENTIFICATION	WIRE SIZE	COLOR
	26					
	27					
	28					
	29					
	30					
	31					
	32					
	33					
	34	J17-35	Direct	Input, Amp B (#10)	Coax	
	35	Frame		Chassis Ground	22	BK
	36			Overload, Amp B		
	37	±-10	1	±	20	BK
	38			Overload, Amp A		
	39	-250-6	1	-250V	22	W
	40			-250V		
	41	J8-41	1	Chopper Drive (Hot)	22'	BR
	42	J14-42	1	Chopper Drive (Hot)	22"	BR
	43	J8-43	1	Chopper Drive (Gnd)	22'	W-BR
	44	J14-44	1	Chopper Drive (Gnd)	22"	W-BR
	45	J4-9	1	Fil #4A	20#	BR
	46	J14-46	1	Fil #4A	20*	BR
	47	J4-26	1	Fil #4CT } at -125V	20#	W
	48	J14-48	1	Fil #4CT } at -125V	20*	W
	49	J4-42	1	Fil #4B	20#	W-BR
	50	J14-50	1	Fil #4B	20*	W-BR

NOTES: (#) Twisted triple
(*) Twisted triple
(') Twisted pair
(") Twisted pair

J13 (CHAN 4)

DC AMPS #9 & #10

WIRE NO.	TERMINAL	DESTINATION	CABLE	IDENTIFICATION	WIRE SIZE	COLOR
	2					
	18					
	9					
	10					
	12					
	13					
	14					
	15					
	16					
	17					
	36					
	37					
	38					
	39					
	40					
	41					
	42					
	43					
	44					
	45					
	46					
	47					
	48					
	49					
	50					

NOTES: JUMPER CONNECTIONS

J14 (CHAN 5)

DC AMPS #11 & #12

WIRE NO.	TERMINAL	DESTINATION	CABLE	IDENTIFICATION	WIRE SIZE	COLOR
	1	J18-2	Direct	Input, Amp A (#11)	Coax	
	2			H.Q. Ground		
	3					
	4	J18-4	Direct	Output, Amp A (#11)	22	W-G
	5			Boost, Amp A		
	6	J18-37	Direct	Output, Amp B (#12)	20	G
	7			Boost, Amp B		
	8					
	9	-560-7	1	-560V	22	V
	10			-560V		
	11					
	12	+250-7	1	+250V	22	R
	13			+250V		
	14			Fil #2A		
	15	J13-15	1	Fil #2A	20"	BR
	16			Fil #2B		
	17	J13-17	1	Fil #2B	20"	W-BR
	18	HQ-11	2	H.Q. Ground	20	BK
	19					
	20					
	21					
	22					
	23					
	24					
	25					

NOTES: (") Twisted pair

J14 (CHAN 5)

DC AMPS #11 & #12

WIRE NO.	TERMINAL	DESTINATION	CABLE	IDENTIFICATION	WIRE SIZE	COLOR
	26					
	27					
	28					
	29					
	30					
	31					
	32					
	33					
	34	J18-35	Direct	Input, Amp B (#12)	Coax	
	35	Frame		Chassis Ground	22	BK
	36			Overload, Amp B		
	37	±-11	1	±	20	BK
	38			Overload, Amp A		
	39	-250-7	1	-250V	22	W
	40			-250V		
	41	J15-41	1	Chopper Drive (Hot)	22'	BR
	42	J13-42	1	Chopper Drive (Hot)	22"	BR
	43	J15-43	1	Chopper Drive (Gnd)	22'	W-BR
	44	J13-44	1	Chopper Drive (Gnd)	22"	W-BR
	45			Fil #4A		
	46	J13-46	1	Fil #4A	20*	BR
	47			Fil #4CT } at -125V		
	48	J13-48	1	Fil #4CT } at -125V	20*	W
	49			Fil #4B		
	50	J13-50	1	Fil #4B	20*	W-BR

NOTES: (*) Twisted triple
(') Twisted pair
(") Twisted pair

J14 (CHAN 5)

DC AMPS #11 & #12

WIRE NO.	TERMINAL	DESTINATION	CABLE	IDENTIFICATION	WIRE SIZE	COLOR
	2 18					
	9 10					
	12 13					
	14 15					
	16 17					
	36 37 38					
	39 40					
	41 42					
	43 44					
	45 46					
	47 48					
	49 50					

NOTES:

JUMPER CONNECTIONS

J15 (CHAN 6)

DC AMPS #13 & #14

WIRE NO.	TERMINAL	DESTINATION	CABLE	IDENTIFICATION	WIRE SIZE	COLOR
	1	J19-2	Direct	Input, Amp A (#13)	Coax	
	2			H.Q. Ground		
	3					
	4	J19-4	Direct	Output, Amp A (#13)	22	W-BL
	5			Boost, Amp A		
	6	J19-37	Direct	Output, Amp B (#14)	20	BL
	7			Boost, Amp B		
	8					
	9	-560-8	1	-560V	22	V
	10			-560V		
	11					
	12	+250-8	1	+250V	22	R
	13			+250V		
	14	J16-14	1	Fil #2A	20'	BR
	15	J2-10	1	Fil #2A	20"	BR
	16	J16-16	1	Fil #2B	20'	W-BR
	17	J2-43	1	Fil #2B	20"	W-BR
	18	HQ-12	2	H.Q. Ground	20	BK
	19					
	20					
	21					
	22					
	23					
	24					
	25					

NOTES: (') Twisted pair
(") Twisted pair

J15 (CHAN 6)

DC AMPS #13 & #14

WIRE NO.	TERMINAL	DESTINATION	CABLE	IDENTIFICATION	WIRE SIZE	COLOR
	26					
	27					
	28					
	29					
	30					
	31					
	32					
	33					
	34	J19-35	Direct	Input, Amp B (#14)	Coax	
	35	Frame		Chassis Ground	22	BK
	36			Overload, Amp B		
	37	±-12	1	±	20	BK
	38			Overload, Amp A		
	39	-250-8	1	-250V	22	W
	40			-250V		
	41	J14-41	1	Chopper Drive (Hot)	22'	BR
	42	J16-42	1	Chopper Drive (Hot)	22"	BR
	43	J14-43	1	Chopper Drive (Gnd)	22'	W-BR
	44	J16-44	1	Chopper Drive (Gnd)	22"	W-BR
	45	J16-45	1	Fil #4A	20#	BR
	46	J4-10	1	Fil #4A	20*	BR
	47	J16-47	1	Fil #4CT } at -125V	20#	W
	48	J4-27	1	Fil #4CT } at -125V	20*	W
	49	J16-49	1	Fil #4B	20#	W-BR
	50	J4-43	1	Fil #4B	20*	W-BR

NOTES: (#) Twisted triple
(*) Twisted triple
(') Twisted pair
(") Twisted pair

J15 (CHAN 6)

DC AMPS #13 & #14

WIRE NO.	TERMINAL	DESTINATION	CABLE	IDENTIFICATION	WIRE SIZE	COLOR
	2					
	18					
	9					
	10					
	12					
	13					
	14					
	15					
	16					
	17					
	36					
	37					
	38					
	39					
	40					
	41					
	42					
	43					
	44					
	45					
	46					
	47					
	48					
	49					
	50					

NOTES: JUMPER CONNECTIONS

J16 (CHAN 7)

DC AMPS #15 & #16

WIRE NO.	TERMINAL	DESTINATION	CABLE	IDENTIFICATION	WIRE SIZE	COLOR
	1	J20-2	Direct	Input, Amp A (#15)	Coax	
	2			H.Q. Ground		
	3					
	4	J20-4	Direct	Output, Amp A (#15)	22	W-V
	5			Boost, Amp A		
	6	J20-37	Direct	Output, Amp B (#16)	20	V
	7			Boost, Amp B		
	8					
	9	-560-9	1	-560V	22	V
	10			-560V		
	11					
	12	+250-9	1	+250V	22	R
	13			+250V		
	14	J15-14	1	Fil #2A	20'	BR
	15			Fil #2A		
	16	J15-16	1	Fil #2B	20'	W-BR
	17			Fil #2B		
	18	HQ-13	2	H.Q. Ground	20	BK
	19					
	20					
	21					
	22					
	23					
	24					
	25					

NOTES: (') Twisted pair

J16 (CHAN 7)
DC AMPS #15 & #16

WIRE NO.	TERMINAL	DESTINATION	CABLE	IDENTIFICATION	WIRE SIZE	COLOR
	26					
	27					
	28					
	29					
	30					
	31					
	32					
	33					
	34	J20-35	Direct	Input, Amp B (#16)	Coax	
	35	Frame		Chassis Ground	22	BK
	36			Overload, Amp B		
	37	±13	1	±	20	BK
	38			Overload, Amp A		
	39	-250-9	1	-250V	22	W
	40			-250V		
	41	J12-14	1	Chopper Drive (Hot)	22	BR
	42	J15-42	1	Chopper Drive (Hot)	22"	BR
	43			Chopper Drive (Gnd)		
	44	J15-44	1	Chopper Drive (Gnd)	22"	W-BR
	45	J15-45	1	Fil #4A	20#	BR
	46			Fil #4A		
	47	J15-47	1	Fil #4CT } at -125V	20#	W
	48			Fil #4CT } at -125V		
	49	J15-49	1	Fil #4B	20#	W-BR
	50			Fil #4B		

NOTES: (#) Twisted triple
(") Twisted pair

J16 (CHAN 7)
DC AMPS #15 & #16

WIRE NO.	TERMINAL	DESTINATION	CABLE	IDENTIFICATION	WIRE SIZE	COLOR
	2 18					
	9 10					
	12 13					
	14 15					
	16 17					
	36 37 38					
	39 40					
	41 42					
	43 44					
	45 46					
	47 48					
	49 50					

NOTES: JUMPER CONNECTIONS

J17 (CHAN 4)

DATA SUMMING

WIRE NO.	TERMINAL	DESTINATION	CABLE	IDENTIFICATION	WIRE SIZE	COLOR
	1	Frame		Chassis Ground	22	BK
	2	J13-1	Direct	Input Amp #9	Coax	
	3			Chassis Ground		
	4	J13-4	Direct	Output Amp #9	22	W-Y
	5					
	6					
	7	J18-7	3	Holding Relay Signal	22	W-BL
	8	J29-T	3	Bit #10 (512) (MSB)	22	W-BK
	9	J29-20	3	Bit #9 (256)		W
	10	J29-S	3	Bit #8 (128)		S
	11	J29-19	3	Bit #7 (64) Analog Channel #4		V
	12	J29-R	3	Bit #6 (32)		BL
	13	J29-18	3	Bit #5 (16)		G
	14	J29-Q	3	Bit #4 (8)		Y
	15	J29-17	3	Bit #3 (4)		O
	16	J29-P	3	Bit #2 (2)		R
	17	J29-16	3	Bit #1 (1) (LSB)	22	BR
	18			Chassis Ground		
	19			Chassis Ground		
	20			Chassis Ground		
	21					
	22					
	23					
	24	J11-24	3	Holding Relay Signal	22	W-BL
	25					

NOTES:

J17 (CHAN 4)

DATA SUMMING

WIRE NO.	TERMINAL	DESTINATION	CABLE	IDENTIFICATION	WIRE SIZE	COLOR
	26					
	27					
	28					
	29					
	30					
	31					
	32					
	33	+ Ref-8	2	+Ref Voltage	20	W-R
	34			Chassis Ground		
	35	J13-34	Direct	Input Amp #10	Coax	
	36			Chassis Ground		
	37	J13-6	Direct	Output Amp #10	20	Y
	38	J12-4	2	Output Amp #10	20	Y
	39			(Analog Output #4)		
	40					
	41					
	42					
	43					
	44	+12-5	1	+12V	20	R
	45	0V-7	1	0V	20	BK
	46			0V		
	47					
	48					
	49					
	50	-85-5	1	-85V	22	W-BK

NOTES:

J17 (CHAN 4) DATA SUMMING

WIRE NO.	TERMINAL	DESTINATION	CABLE	IDENTIFICATION	WIRE SIZE	COLOR
	7 — 24					
	37 — 38					

NOTES: JUMPER CONNECTIONS

J18 (CHAN 5) DATA SUMMING

WIRE NO.	TERMINAL	DESTINATION	CABLE	IDENTIFICATION	WIRE SIZE	COLOR
	1	Frame		Chassis Ground	22	BK
	2	J14-1	Direct	Input Amp #11	Coax	
	3			Chassis Ground		
	4	J14-4	Direct	Output Amp #11	22	W-G
	5					
	6					
	7	J17-7	3	Holding Relay Signal	22	W-BL
	8	J30-E	3	Bit #10 (512) (MSB)	22	W-BK
	9	J30-5	3	Bit #9 (256)		W
	10	J30-D	3	Bit #8 (128)		S
	11	J30-4	3	Bit #7 (64) Analog Channel #5		V
	12	J30-C	3	Bit #6 (32)		BL
	13	J30-3	3	Bit #5 (16)		G
	14	J30-B	3	Bit #4 (8)		Y
	15	J30-2	3	Bit #3 (4)		O
	16	J30-A	3	Bit #2 (2)		R
	17	J30-1	3	Bit #1 (1) (LSB)	22	BR
	18			Chassis Ground		
	19			Chassis Ground		
	20			Chassis Ground		
	21					
	22					
	23					
	24	J19-24	3	Holding Relay Signal	22	W-BL
	25					

NOTES:

J18 (CHAN 5)

DATA SUMMING

WIRE NO.	TERMINAL	DESTINATION	CABLE	IDENTIFICATION	WIRE SIZE	COLOR
	26					
	27					
	28					
	29					
	30					
	31					
	32					
	33	+ Ref-9	2	+ Ref Voltage	20	W-R
	34			Chassis Ground		
	35	J14-34	Direct	Input Amp #12	Coax	
	36			Chassis Ground		
	37	J14-6	Direct	Output Amp #12	20	G
	38	J12-5	2	Output Amp #12	20	G
	39			(Analog Output #5)		
	40					
	41					
	42					
	43					
	44	+12-6	1	+12V	20	R
	45	0V-8	1	0V	20	BK
	46			0V		
	47					
	48					
	49					
	50	-85-6	1	-85V	22	W-BK

NOTES:

J18 (CHAN 5)

DATA SUMMING

WIRE NO.	TERMINAL	DESTINATION	CABLE	IDENTIFICATION	WIRE SIZE	COLO
	37					
	38					
	7					
	24					

NOTES:

JUMPER CONNECTIONS

J19 (CHAN 6)

DATA SUMMING

WIRE NO.	TERMINAL	DESTINATION	CABLE	IDENTIFICATION	WIRE SIZE	COLOR
	1	Frame		Chassis Ground	22	BK
	2	J15-1	Direct	Input Amp #13	Coax	
	3			Chassis Ground		
	4	J15-4	Direct	Output Amp #13	22	W-BL
	5					
	6					
	7	J20-7	3	Holding Relay Signal	22	W-BL
	8	J30-J	3	Bit #10 (512) (MSB)	22	W-BK
	9	J30-10	3	Bit #9 (256)		W
	10	J30-I	3	Bit #8 (128)		S
	11	J30-9	3	Bit #7 (64) Analog Channel #6		V
	12	J30-H	3	Bit #6 (32)		BL
	13	J30-8	3	Bit #5 (16)		G
	14	J30-G	3	Bit #4 (8)		Y
	15	J30-7	3	Bit #3 (4)		O
	16	J30-F	3	Bit #2 (2)		R
	17	J30-6	3	Bit #1 (1) (LSB	22	BR
	18			Chassis Ground		
	19			Chassis Ground		
	20			Chassis Ground		
	21					
	22					
	23					
	24	J18-24	3	Holding Relay Signal	22	W-BL
	25					

NOTES:

J19 (CHAN 6)

DATA SUMMING

WIRE NO.	TERMINAL	DESTINATION	CABLE	IDENTIFICATION	WIRE SIZE	COLOR
	26					
	27					
	28					
	29					
	30					
	31					
	32					
	33	+ Ref-10	2	+ Ref Voltage	20	W-R
	34			Chassis Ground		
	35	J15-34	Direct	Input Amp #14	Coax	
	36			Chassis Ground		
	37	J15-6	Direct	Output Amp #14	20	BL
	38	J12-6	2	Output Amp #14	20	BL
	39			(Analog Output #6)		
	40					
	41					
	42					
	43					
	44	+12-7	1	+12V	20	R
	45	OV-9	1	OV	20	BK
	46			OV		
	47					
	48					
	49					
	50	-85-7	1	-85V	22	W-BK

NOTES:

J19 (CHAN 6)

DATA SUMMING

WIRE NO.	TERMINAL	DESTINATION	CABLE	IDENTIFICATION	WIRE SIZE	COLOR
	7					
	24					
	37					
	38					

NOTES:

JUMPER CONNECTIONS

J20 (CHAN 7)

DATA SUMMING

WIRE NO.	TERMINAL	DESTINATION	CABLE	IDENTIFICATION		WIRE SIZE	COLOR
	1	Frame		Chassis Ground		22	BK
	2	J16-1	Direct	Input Amp #15		Coax	
	3			Chassis Ground			
	4	J16-4	Direct	Output Amp #15		22	W-V
	5						
	6						
	7	J19-7	3	Holding Relay Signal		22	W-BL
	8	J30-0	3	Bit #10 (512)	(MSB)	22	W-BK
	9	J30-15	3	Bit #9 (256)			W
	10	J30-N	3	Bit #8 (128)			S
	11	J30-14	3	Bit #7 (64)	Analog Channel #7		V
	12	J30-M	3	Bit #6 (32)			BL
	13	J30-13	3	Bit #5 (16)			G
	14	J30-L	3	Bit #4 (8)			Y
	15	J30-12	3	Bit #3 (4)			O
	16	J30-K	3	Bit #2 (2)			R
	17	J30-11	3	Bit #1 (1)	(LSB)	22	BR
	18			Chassis Ground			
	19			Chassis Ground			
	20			Chassis Ground			
	21						
	22						
	23						
	24			Holding Relay Signal			
	25						

NOTES:

J20 (CHAN 7)

DATA SUMMING

WIRE NO.	TERMINAL	DESTINATION	CABLE	IDENTIFICATION	WIRE SIZE	COLOR
	26					
	27					
	28					
	29					
	30					
	31					
	32					
	33	+ Ref-11	2	+ Ref Voltage	20	W-R
	34			Chassis Ground		
	35	J16-34	Direct	Input Amp #16	Coax	
	36			Chassis Ground		
	37	J16-6	Direct	Output Amp #16	20	V
	38	J12-7	2	Output Amp #16	20	V
	39			(Analog Output #7)		
	40					
	41					
	42					
	43					
	44	+12-8	1	+12V	20	R
	45	OV-10	1	OV	20	BK
	46			OV		
	47					
	48					
	49					
	50	-85-8	1	-85V	22	W-BK

NOTES:

J20 (CHAN 7)

DATA SUMMING

WIRE NO.	TERMINAL	DESTINATION	CABLE	IDENTIFICATION	WIRE SIZE	COLOR
	37					
	38					

NOTES:

JUMPER CONNECTIONS

J21

CHOPPER DRIVE

WIRE NO.	TERMINAL	DESTINATION	CABLE	IDENTIFICATION	WIRE SIZE	COLOR
	1					
	2					
	3					
	4					
	5					
	6					
	7					
	8					
	9					
	10					
	11					
	12					
	13					
	14					
	15					
	16					
	17					
	18					
	19					
	20					
	21					
	22					
	23					
	24					
	25					

NOTES:

J21

CHOPPER DRIVE

WIRE NO.	TERMINAL	DESTINATION	CABLE	IDENTIFICATION	WIRE SIZE	COLOR
	26					
	72					
	28					
	29					
	30					
	31					
	32					
	33					
	34					
	35					
	36					
	37					
	38					
	39					
	40					
	41					
	42					
	43					
	44	+12-9	1	+12V	20	R
	45	0V-11	1	0V	20	BK
	46	J5-43	1	0V (Gnd)	22'	W-BR
	47	J5-41	1	Chopper Drive	22'	BR
	48	-20-2	1	-20V	20	S
	49					
	50	Frame		Chassis Ground	22	BK

NOTES: (') Twisted pair

J21

CHOPPER DRIVE

WIRE NO.	TERMINAL	DESTINATION	CABLE	IDENTIFICATION	WIRE SIZE	COLOR
	45					
	46					

NOTES: JUMPER CONNECTIONS

J22

REFERENCE

WIRE NO.	TERMINAL	DESTINATION	CABLE	IDENTIFICATION	WIRE SIZE	COLO
	1	Frame		Chassis Ground	22	BK
	2	J8-1	2	Input Amp #7	Coax	
	3			Chassis Ground		
	4	- Ref-2	2	-Ref Voltage Output	20	W-V
	5					
	6					
	7					
	8					
	9					
	10					
	11					
	12					
	13					
	14					
	15					
	16					
	17					
	18	HQ-4	2	H.Q. Ground	20	BK
	19			Chassis Ground		
	20			Chassis Ground		
	21					
	22					
	23					
	24					
	25					

NOTES:

J22

REFERENCE

WIRE NO.	TERMINAL	DESTINATION	CABLE	IDENTIFICATION	WIRE SIZE	COLOR
	26					
	27					
	28					
	29					
	30					
	31					
	32					
	33					
	34			Chassis Ground		
	35	J8-34	2	Input Amp #8	Coax	
	36			Chassis Ground		
	37	+Ref-2	2	+Ref Voltage Output	20	W-R
	38					
	39					
	40	J27-A	2	+External Ref Voltage Input	Coax	
	41					
	42					
	43					
	44					
	45	0V-17	1	0V	20	BK
	46					
	47	-20-3	1	-20V	20	S
	48					
	49					
	50					

NOTES:

J22

REFERENCE

WIRE NO.	TERMINAL	DESTINATION	CABLE	IDENTIFICATION	WIRE SIZE	COLOR
	1					
	3					
	19					
	20					
	34					
	36					

NOTES:

JUMPER CONNECTIONS

J23

CONTROL

WIRE NO.	TERMINAL	DESTINATION	CABLE	IDENTIFICATION	WIRE SIZE	COLOR
	1					
	2	+250-1	1	+250V	22	R
	3			+250V		
	4	-250-1	1	-250V	22	W
	5			-250V		
	6	-560-1	1	-560V	22	V
	7			-560V		
	8					
	9					
	10	+12V-1	1	+12V	20	R
	11			+12V		
	12					
	13					
	14	-20-1	1	-20V	20	S
	15					
	16	-85-1	1	-85V	20	W-BK
	17			-85V		
	18	XF1-2	1	120VAC $Ø_1$ Input (Fused)	18	S
	19	XF1-2	1	120VAC $Ø_1$ Input (Fused)	18	S
	20	XF2-2	1	120VAC $Ø_2$ Input (Fused)	18	W-S
	21	XF2-2	1	120VAC $Ø_2$ Input (Fused)	18	W-S
	22	J1-36	1	120VAC $Ø_1$ Switched	18	S
	23	J3-36	1	120VAC $Ø_1$ Switched	18	S
	24	J1-33	1	120VAC $Ø_2$ Switched	18	W-S
	25	J24-4	1	120VAC $Ø_2$ Switched	18	W-S

NOTES:

J23

CONTROL

WIRE NO.	TERMINAL	DESTINATION	CABLE	IDENTIFICATION	WIRE SIZE	COLOR
	26	J24-44	1	+12V (A)	20	R
	27	J25-44	1	+12V (B)	20	R
	28					
	29			0V		
	30			-20V (A)		
	31			-20V (B)		
	32	J30-Y	3	Hold Relay Trigger	Coax	
	33	J9-7	3	Hold Relay Signal	22	W-BL
	34	J1-47	1	+250V (A)	20	R
	35	J2-47	1	+250V (B)	20	R
	36	J3-13	1	-250V (A)	20	W
	37	J4-13	1	-250V (B)	20	W
	38	J3-17	1	-560V (A)	22	V
	39	J4-17	1	-560V (B)	22	V
	40	± -16	1	±	20	BK
	41					
	42			+12V (A)		
	43			+12V (B)		
	44					
	45	0V-12	1	0V	20	BK
	46	J24-48	1	-20V (A)	20	S
	47	J25-48	1	-20V (B)	20	S
	48	J24-49	1	-85V (A)	20	W-BK
	49	J25-49	1	-85V (B)	20	W-BK
	50	Frame		Chassis Ground	22	BK

NOTES:

J24
POWER SUPPLY "A"
-85V

WIRE NO.	TERMINAL	DESTINATION	CABLE	IDENTIFICATION	WIRE SIZE	COLOR
	1	J28-B	1	120V AC Common	18	W
	2	J25-2	1	120V AC Common	18	W
	3					
	4	J23-25	1	120V AC Ø2 Switched	18	W-S
	5	J25-5	1	120V AC Ø2 Switched	18	W-S
	6					
	7					
	8					
	9					
	10					
	11					
	12					
	13					
	14					
	15					
	16					
	17					
	18					
	19					
	20					
	21					
	22					
	23					
	24					
	25					

NOTES:

J24
POWER SUPPLY "A"
-85V

WIRE NO.	TERMINAL	DESTINATION	CABLE	IDENTIFICATION	WIRE SIZE	COLOR
	26					
	27					
	28					
	29					
	30					
	31					
	32	J12-47	1	-85V (A)	22	W-BK
	33					
	34			+12V Unreg. Output (A)		
	35			-20V Unreg. Output (A)		
	36					
	37					
	38					
	39					
	40					
	41					
	42					
	43	J12-45	1	+12V (A)	22	R
	44	J23-26	1	+12V (A)	20	R
	45	0V-13	1	0V (A)	20	BK
	46	0V-14	1	0V (A)	20	BK
	47	J12-46	1	-20V (A)	22	S
	48	J23-46	1	-20V (A)	20	S
	49	J23-48	1	-85V (A)	20	W-BK
	50	Frame		Chassis Gnd.	22	BK

NOTES:

J24
POWER SUPPLY "A"
-85V

WIRE NO.	TERMINAL	DESTINATION	CABLE	IDENTIFICATION	WIRE SIZE	COLOR
	1					
	2					
	4					
	5					
	45					
	46					
	47					
	48					
	43					
	44					
	49					
	32					

NOTES: Jumper Connections

J25
POWER SUPPLY "B"
-85V

WIRE NO.	TERMINAL	DESTINATION	CABLE	IDENTIFICATION	WIRE SIZE	COLOR
	1	J12-15	1	120V AC Common	22	W
	2	J24-2	1	120V AC Common	18	W
	3					
	4	J4-33	1	120V AC Ø2 Switched	18	W-S
	5	J24-5	1	120V AC Ø2 Switched	18	W-S
	6					
	7					
	8					
	9					
	10					
	11					
	12					
	13					
	14					
	15					
	16					
	17					
	18					
	19					
	20					
	21					
	22					
	23					
	24					
	25					

NOTES:

J25
POWER SUPPLY "B"
-85V

WIRE NO.	TERMINAL	DESTINATION	CABLE	IDENTIFICATION	WIRE SIZE	COLOR
	26					
	27					
	28					
	29					
	30					
	31					
	32	J12-30	1	-85V (B)	22	W-BK
	33					
	34			+12V Unreg. Output (B)		
	35			-20V Unreg. Output (B)		
	36					
	37					
	38					
	39					
	40					
	41					
	42					
	43	J12-28	1	+12V (B)	22	R
	44	J23-27	1	+12V (B)	20	R
	45	0V-15	1	0V (B)	20	BK
	46	0V-16	1	0V (B)	20	BK
	47	J12-29	1	-20V (B)	22	S
	48	J23-47	1	-20V (B)	20	S
	49	J23-49	1	-85V (B)	20	W-BK
	50	Frame		Chassis Gnd.	22	BK

NOTES:

J25
POWER SUPPLY "B"
-85V

WIRE NO.	TERMINAL	DESTINATION	CABLE	IDENTIFICATION	WIRE SIZE	COLOR
	1					
	2					
	4					
	5					
	45					
	46					
	47					
	48					
	32					
	49					
	43					
	44					

NOTES:
Jumper Connections

J26 ANALOG OUTPUT CONNECTOR

WIRE NO.	TERMINAL	DESTINATION	CABLE	IDENTIFICATION	WIRE SIZE	COLOR
	A	J12-19	2	Analog Output #2	20	R
	B					
	C	J12-22	2	Analog Output #5	20	G
	D					
	E	J12-24	2	Analog Output #7	20	V
	F					
	G	J12-23	2	Analog Output #6	20	BL
	H					
	J	J12-20	2	Analog Output #3	20	O
	K					
	L	J12-18	2	Analog Output #1	20	BR
	M					
	N					
	P					
	R	HQ-2	2	HQ Ground	20	BK
	S			HQ Ground		
	T					
	U					
	V	J12-21	2	Analog Output #4	20	Y

NOTES: AN3102A-22-14S

J27 REFERENCE CONNECTOR

WIRE NO.	TERMINAL	DESTINATION	CABLE	IDENTIFICATION	WIRE SIZE	COLOR
	A	J22-40	2	+ External Ref. Voltage Input	Coax	
	B	+Ref-3	2	+ Ref. Voltage Output	20	W-R
	C			+ Ref. Voltage Output		
	D					
	E					
	F	-Ref-3	2	- Ref. Voltage Output	20	W-V
	G			- Ref. Voltage Output		
	H			+ External Ref. Voltage Input		
	I	HQ-3	2	H.Q. Ground	20	BK
	J			H.Q. Ground		

NOTES: AN3102A-18-1S

J27
REFERENCE CONNECTOR

WIRE NO.	TERMINAL	DESTINATION	CABLE	IDENTIFICATION	WIRE SIZE	COLOR
	A					
	H					
	B					
	C					
	F					
	G					
	I					
	J					

NOTES:
2 Jumper Connections
AN3102A-18-1S

J28
AC CONNECTOR

WIRE NO.	TERMINAL	DESTINATION	CABLE	IDENTIFICATION	WIRE SIZE	COLOR
	A	S1-3	*	120V AC Ø1 Input	14	S
	B	BL-2	1	120V AC Common	18	W
	B	J1-1	1	120V AC Common	18	W
	B	XDS1-B	Direct	120V AC Common	22	W
	B	J24-1	1	120V AC Common	18	W
	C	Frame		Frame Ground	14	BK
	D					
	E	S1-6	*	120V Ø2 Input	14	W-S

NOTES: AN3102A-18-11P
*- Do not cable

J29
DIGITAL INPUT
CONNECTOR #1

WIRE NO.	TERMINAL	DESTINATION	CABLE	IDENTIFICATION	WIRE SIZE	COLOR
	I	J9-17	3	Bit #1 (LSB)	22	BR
	A	J9-16		2		R
	2	J9-15		3		O
	B	J9-14		4		Y
	3	J9-13		5		G
	C	J9-12		6	Analog Channel #1	BL
	4	J9-11		7		V
	D	J9-10		8		S
	5	J9-9		9		W
	E	J9-8		10 (MSB)		W-BK
	6	J10-17		Bit #1 (LSB)		BR
	F	J10-16		2		R
	7	J10-15		3		O
	G	J10-14		4		Y
	8	J10-13		5		G
	H	J10-12		6	Analog Channel #2	BL
	9	J10-11		7		V
	I	J10-10		8		S
	10	J10-9		9		W
	J	J10-8	3	10 (MSB)	22	W-BK

NOTES:
AN3102A-36-404P

J29
DIGITAL INPUT
CONNECTOR #1

WIRE NO.	TERMINAL	DESTINATION	CABLE	IDENTIFICATION	WIRE SIZE	COLOR
	11	J11-17	3	Bit #1 (LSB)	22	BR
	K	J11-16		2		R
	12	J11-15		3		O
	L	J11-14		4		Y
	13	J11-13		5		G
	M	J11-12		6	Analog Channel #3	BL
	14	J11-11		7		V
	N	J11-10		8		S
	15	J11-9		9		W
	O	J11-8		10 (MSB)		W-BK
	16	J17-17		Bit #1 (LSB)		BR
	P	J17-16		2		R
	17	J17-15		3		O
	Q	J17-14		4		Y
	18	J17-13		5		G
	R	J17-12		6	Analog Channel #4	BL
	19	J17-11		7		V
	S	J17-10		8		S
	20	J17-9		9		W
	T	J17-8	3	10 (MSB)	22	W-BK

NOTES:
AN3102A-36-404P

J29
DIGITAL INPUT
CONNECTOR #1

WIRE NO.	TERMINAL	DESTINATION	CABLE	IDENTIFICATION	WIRE SIZE	COLOR
	21					
	U					
	22					
	V					
	23					
	W					
	24					
	X					
	25					
	Y					
	-4.5	0V-18	1	Shield Ground (Digital Ground)	16	BK
	+4.5			Shield Ground		

NOTES:
AN3102A-36-404P

J30
DIGITAL INPUT
CONNECTOR #2

WIRE NO.	TERMINAL	DESTINATION	CABLE	IDENTIFICATION	WIRE SIZE	COLOR
	1	J18-17	3	Bit #1 (LSB)	22	BR
	A	J18-16		2		R
	2	J18-15		3		O
	B	J18-14		4		Y
	3	J18-13		5		G
	C	J18-12		6	Analog Channel #5	BL
	4	J18-11		7		V
	D	J18-10		8		S
	5	J18-9		9		W
	E	J18-8		10 (MSB)		W-BK
	6	J19-17		Bit #1 (LSB)		BR
	F	J19-16		2		R
	7	J19-15		3		O
	G	J19-14		4		Y
	8	J19-13		5		G
	H	J19-12		6	Analog Channel #6	BL
	9	J19-11		7		V
	I	J19-10		8		S
	10	J19-9		9		W
	J	J19-8	3	10 (MSB)	22	W-BK

NOTES:
AN3102A-36-404P

J30
DIGITAL INPUT
CONNECTOR #2

WIRE NO.	TERMINAL	DESTINATION	CABLE	IDENTIFICATION	WIRE SIZE	COLOR
	11	J20-17	3	Bit #1 (LSB)	22	BR
	K	J20-16		2		R
	12	J20-15		3		O
	L	J20-14		4		Y
	13	J20-13		5		G
	M	J20-12		6		BL
	14	J20-11		7		V
	N	J20-10		8		S
	15	J20-9		9		W
	0	J20-8	3	10 (MSB)	22	W-BK
	16					
	P					
	17					
	Q					
	18					
	R					
	19					
	S					
	20					
	T					
	21					
	U					

Analog Channel #7

NOTES:
AN3102A-36-404P

J30
DIGITAL INPUT
CONNECTOR #2

WIRE NO.	TERMINAL	DESTINATION	CABLE	IDENTIFICATION	WIRE SIZE	COLOR
	22					
	V					
	23					
	W					
	24					
	X					
	25			Digital Ground		
	Y	J23-32	3	Hold Relay Trigger	Coax	
	-4.5	OV-1	1	Shield Ground	16	BK
	+4.5			Shield Ground		

NOTES:
AN3102A-36-404P

-560V BUS

WIRE NO.	TERMINAL	DESTINATION	CABLE	IDENTIFICATION	WIRE SIZE	COLOR
	1	J23-6	1	-560V	22	V
	2	J5-9				
	3	J6-9				
	4	J7-9				
	5	J8-9				
	6	J13-9				
	7	J14-9				
	8	J15-9				
	9	J16-9	1	-560V	22	V
	10					

NOTES:

-250V BUS

WIRE NO.	TERMINAL	DESTINATION	CABLE	IDENTIFICATION	WIRE SIZE	COLOR
	1	J23-4	1	-250V	22	W
	2	J5-39				
	3	J6-39				
	4	J7-39				
	5	J8-39				
	6	J13-39				
	7	J14-39				
	8	J15-39				
	9	J16-39	1	-250V	22	W
	10					

NOTES:

± BUS
ANALOG GROUND

WIRE NO.	TERMINAL	DESTINATION	CABLE	IDENTIFICATION	WIRE SIZE	COLOR
	1	0V-2	1	Analog-Digital Power Ground	16	BK
	1	J1-13	1	±	20	BK
	2	J2-13				
	3	J3-47				
	4	J4-47				
	5	J5-37				
	6	J6-37				
	7	J7-37				
	8	J8-37				
	9	J12-12				
	10	J13-37				
	11	J14-37				
	12	J15-37				
	13	J16-37				
	14	J1-26				
	15	J2-26				
	16	J23-40	1	±	20	BK

NOTES:

+250V BUS

WIRE NO.	TERMINAL	DESTINATION	CABLE	IDENTIFICATION	WIRE SIZE	COLOR
	1	J23-2	1	+250V	22	R
	2	J5-12				
	3	J6-12				
	4	J7-12				
	5	J8-12				
	6	J13-12				
	7	J14-12				
	8	J15-12				
	9	J16-12	1	+250V	22	R
	10					

NOTES:

-85V BUS

WIRE NO.	TERMINAL	DESTINATION	CABLE	IDENTIFICATION	WIRE SIZE	COLOR
	1	J23-16	1	-85V	20	W-BK
	2	J9-50			22	W-BK
	3	J10-50				
	4	J11-50				
	5	J17-50				
	6	J18-50				
	7	J19-50				
	8	J20-50	1	-85V	22	W-BK

NOTES:

-20V BUS

WIRE NO.	TERMINAL	DESTINATION	CABLE	IDENTIFICATION	WIRE SIZE	COLOR
	1	J23-14	1	-20V	20	S
	2	J21-48	1	-20V	20	S
	3	J22-47	1	-20V	20	S

NOTES:

0V BUS
DIGITAL GROUND

WIRE NO.	TERMINAL	DESTINATION	CABLE	IDENTIFICATION	WIRE SIZE	COLOR
	1	J30-(-4.5)	1	Digital Ground	16	BK
	2	± - 1		Analog-Digital Power Ground	16	
	3	J9-45		0V	20	
	4	J10-45				
	5	J11-45				
	6	J12-13				
	7	J17-45				
	8	J18-45				
	9	J19-45				
	10	J20-45				
	11	J21-45				
	12	J23-45				
	13	J24-45				
	14	J24-46				
	15	J25-45				
	16	J25-46				
	17	J22-45	1	0V	20	BK
	18	J29(-4.5)	1	0V (Digital Gnd)	16	BK
	19					
	20					

NOTES:

+12V BUS

WIRE NO.	TERMINAL	DESTINATION	CABLE	IDENTIFICATION	WIRE SIZE	COLOR
	1	J23-10	1	+12V	20	R
	2	J9-44				
	3	J10-44				
	4	J11-44				
	5	J17-44				
	6	J18-44				
	7	J19-44				
	8	J20-44				
	9	J21-44	1	+12V	20	R

NOTES:

-REF BUS

WIRE NO.	TERMINAL	DESTINATION	CABLE	IDENTIFICATION	WIRE SIZE	COLOR
	1	JB-4	2	-Ref Voltage Output	20	W-V
	2	J22-4	2		20	
	3	J27-F	2		20	
	4	J12-34	2	-Ref Voltage Output	22	W-V
	5					

NOTES:

H.Q. GROUND BUS

WIRE NO.	TERMINAL	DESTINATION	CABLE	IDENTIFICATION	WIRE SIZE	COLOR
	1		2	H.Q. Ground	20	BK
	2	J26-R				
	3	J27-I				
	4	J22-18				
	5	J12-36				
	6	J5-18				
	7	J6-18				
	8	J7-18				
	9	J8-18				
	10	J13-18				
	11	J14-18				
	12	J15-18				
	13	J16-18	2	H.Q. Ground	20	BK

NOTES:

+REF BUS

WIRE NO.	TERMINAL	DESTINATION	CABLE	IDENTIFICATION	WIRE SIZE	COLOR
	1	J8-TP	2	+Ref Voltage Output	20	W-R
	2	J22-37			20	
	3	J27-B			20	
	4	J12-35			22	
	5	J9-33			20	
	6	J10-33				
	7	J11-33				
	8	J17-33				
	9	J18-33				
	10	J19-33				
	11	J20-33	2	+Ref Voltage Output	20	W-R

NOTES:

BLOWER BL

WIRE NO.	TERMINAL	DESTINATION	CABLE	IDENTIFICATION	WIRE SIZE	COLOR
	BL-1	J4-38	1	120V AC Ø1 Switched	18	S
	BL-2	J28-B	1	120V AC Common	18	W

NOTES:

Rev. 6/15/61

POWER INDICATOR RESISTORS R1, R2

WIRE NO.	TERMINAL	DESTINATION	CABLE	IDENTIFICATION	WIRE SIZE	COLOR
	R1-1	XDS1-A	Direct	Ø1 Indicator Voltage		
	R1-2	XF1-2	Direct	120V AC Ø1 Input (Fused)		
	R2-1	XDS2-A	Direct	Ø2 Indicator Voltage		
	R2-2	XF2-2	Direct	120V AC Ø2 Input (Fused)		

NOTES:
$R_1 = R_2 = 100K, 1/2W, \pm 10\%$

AC LINE POWER SWITCH S1

WIRE NO.	TERMINAL	DESTINATION	CABLE	IDENTIFICATION	WIRE SIZE	COLOR
	1					
	2	XF1-1	*	120V AC Ø1 Input	14	S
	3	J28-A	*	120V AC Ø1 Input	14	S
	4					
	5	XF2-1	*	120V AC Ø2 Input	14	W-S
	6	J28-E	*	120V AC Ø2 Input	14	W-S

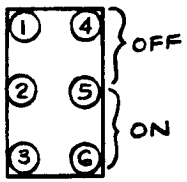

NOTES:
* - Do Not Cable

AC POWER INDICATORS
XDS1, XDS2

WIRE NO.	TERMINAL	DESTINATION	CABLE	IDENTIFICATION	WIRE SIZE	COLOR
	XDS1-A	R1-1	Direct	Ø1 Indicator Voltage		
	XDS1-B	XDS2-B	Direct	120V AC Common	22	W
	XDS1-B	J28-B	Direct	120V AC Common	22	W
	XDS2-A	R2-1	Direct	Ø2 Indicator Voltage		
	XDS2-B	XDS1-B	Direct	120V AC Common	22	W

NOTES:

AC LINE FUSES
XF1, XF2

WIRE NO.	TERMINAL	DESTINATION	CABLE	IDENTIFICATION	WIRE SIZE	COLOR
	XF1-1	S1-2	*	120V AC Ø1 Input	14	S
	XF1-2	R1-2	Direct	120V AC Ø1 Input (Fused)		
	XF1-2	J23-18	1	120V AC Ø1 Input (Fused)	18	S
	XF1-2	J23-19	1	120V AC Ø1 Input (Fused)	18	S
	XF2-1	S1-5	*	120V AC Ø2 Input	14	W-S
	XF2-2	R2-2	Direct	120V AC Ø2 Input (Fused)		
	XF2-2	J23-20	1	120V AC Ø2 Input (Fused)	18	W-S
	XF2-2	J23-21	1	120V AC Ø2 Input (Fused)	18	W-S

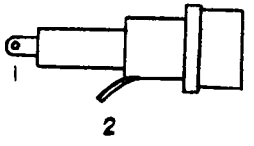

NOTES:
* - Do Not Cable

CHAPTER VII

SCHEMATICS AND WIRING DIAGRAMS

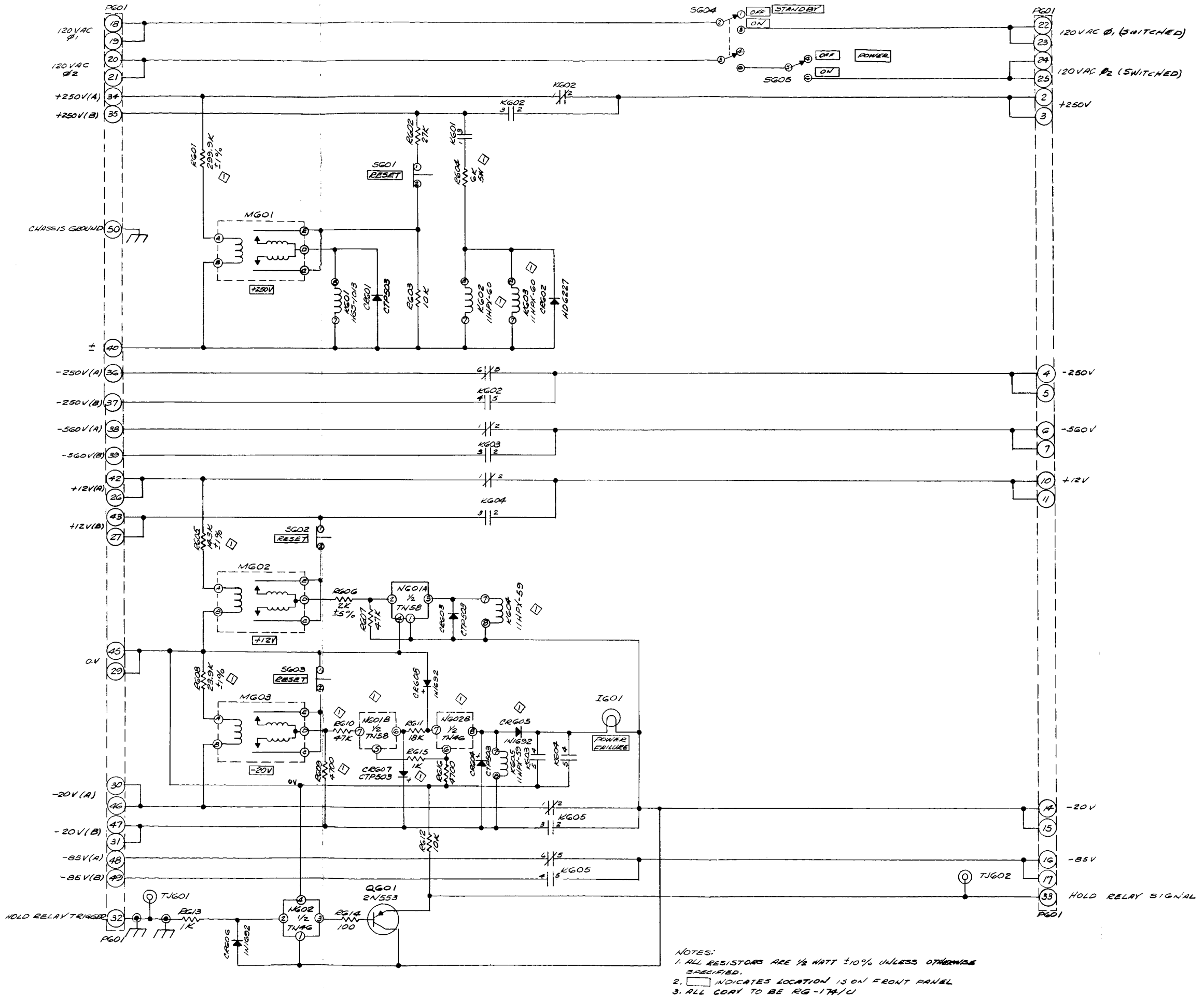

Figure 7-2. Schematic, Control Chassis, Dwg. #D77S6A

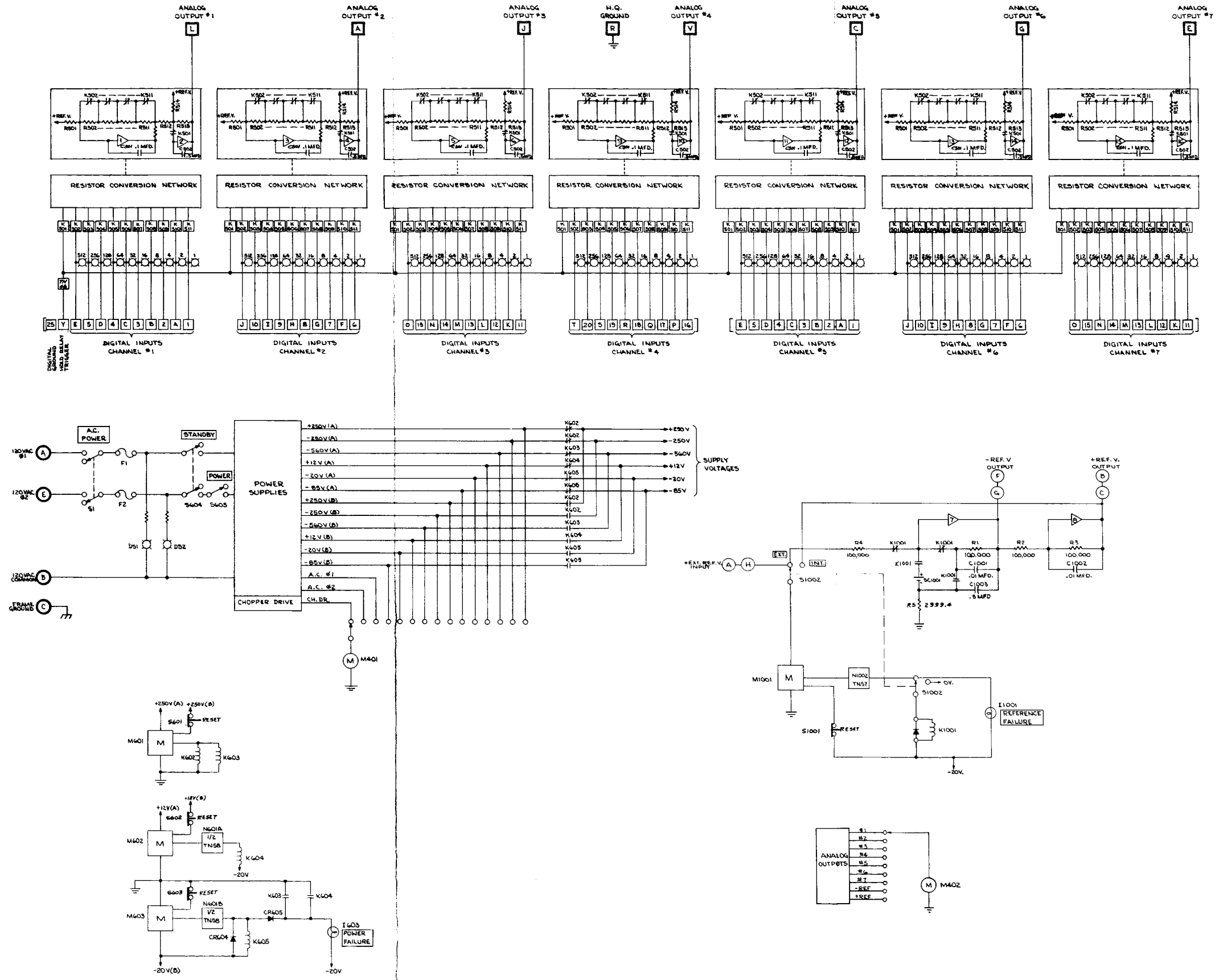

Figure 7-1. Block Diagram, 7 Channel D-A Converter, Dwg. #E77B1A

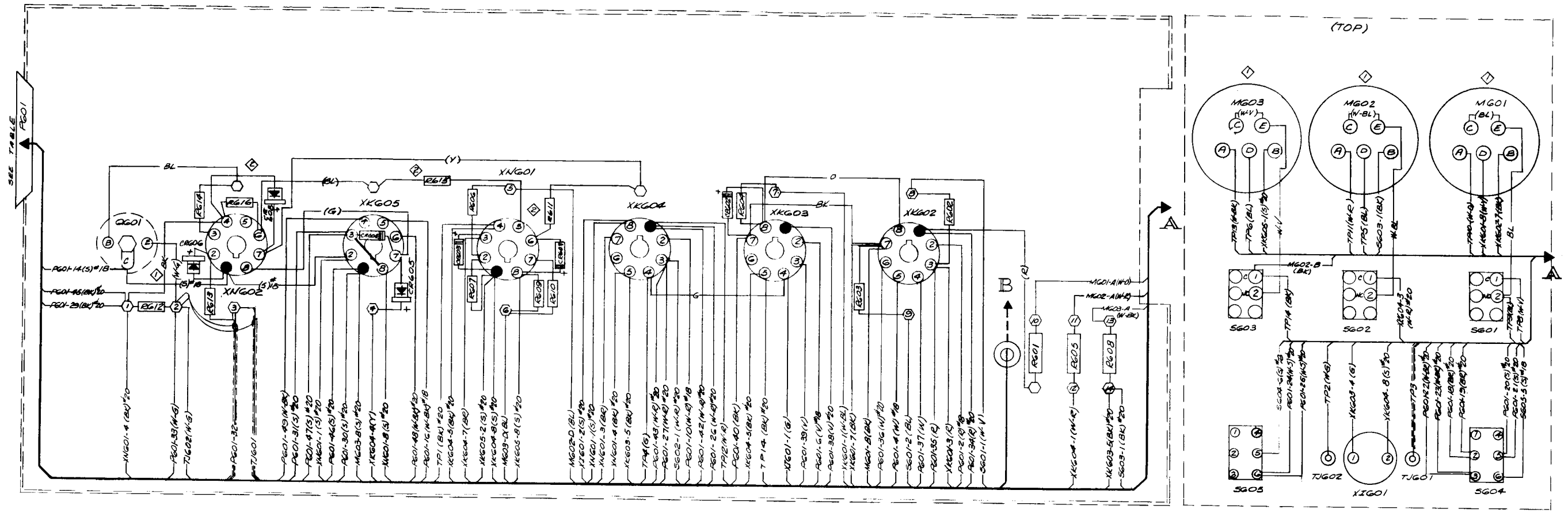

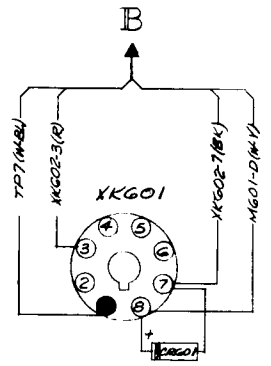

PG01

PIN	DESTINATION	FUNCTION	WIRE	PIN	DESTINATION	FUNCTION	WIRE
1				26	XKG04-1	+12V(A)	W-R #20
2	XKG02-2	+250V	R #18	27	XKG04-3	+12V(B)	W-R #20
3				28			
4	XKG02-3	-250V	W #18	29	TP1	0V	
5				30	XKG03-1	-20V(A)	BK #20
6	XKG03-2	-360V	Y #18	31	XKG03-3	-20V(B)	S #20
7				32	TP5	HALO TRIGGER	COAX
8				33	TP2	HALO SIGNAL	RG
9				34	XKG02-1	+250V(A)	R #20
10	XKG04-2	+12V	W-R #18	35	XKG02-3	+250V(B)	R
11				36	XKG02-6	-250V(A)	W #20
12				37	XKG02-4	-250V(B)	W
13				38	XKG03-1	-360V(A)	V #20
14	SG01-C	-20V	S #18	39	XKG03-3	-360V(B)	V
15				40	XKG03-7	± GROUND	BK
16	XKG06-3	-85V	W-BK #18	41			
17				42	XKG04-1	+12V(A)	W-R #20
18	SG04-2	120 VAC @1	BK #20	43	XKG04-3	+12V(B)	W-R #20
19	SG04-2	120 VAC @1	BK #20	44			
20	SG04-5	120 VAC @2	S #20	45	TP1	0V	
21	SG04-5	120 VAC @2	S #20	46	XKG06-1	-20V(A)	BK #20
22	SG04-3	120 VAC @, SW	W-BK #20	47	XKG06-3	-20V(B)	S #20
23	SG04-3	120 VAC @, SW	W-BK #20	48	XKG06-4	-85V(A)	W-BK #20
24	SG05-6	120 VAC @2, SW	W-S #20	49	XKG06-6	-85V(B)	W-BK
25	SG05-6	120 VAC @2, SW	W-S #20	50	GROUND LUG	CHASSIS GND	BK

NOTES:
1. ALL WIRE TO BE #22 GA UNLESS OTHERWISE SPECIFIED
2. ≡≡≡≡ INDICATES COAX RG-174/U

Figure 7-3. Wiring Diagram, Control Chassis, Dwg. #D77W6A

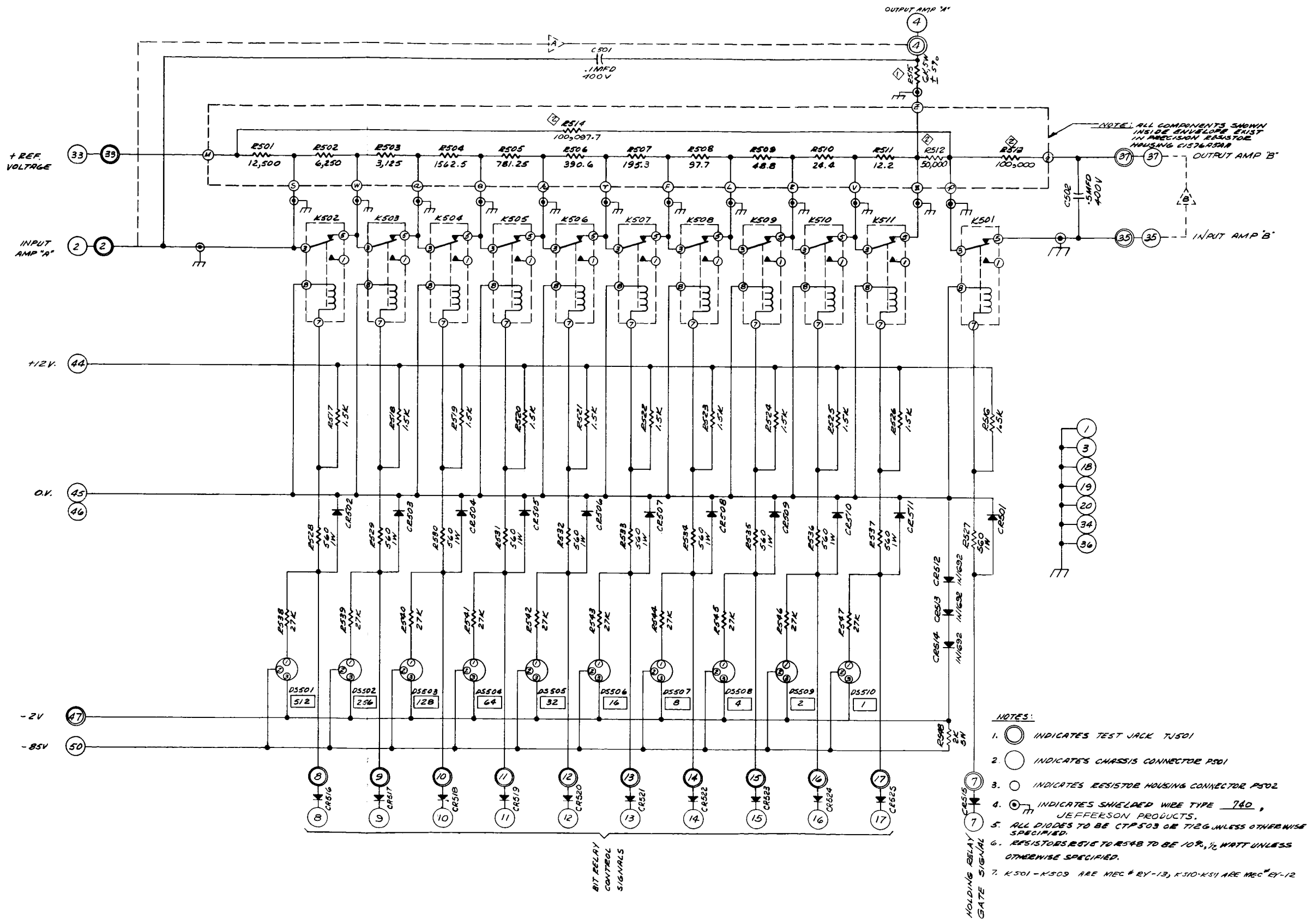

Figure 7-4. Schematic, Data Summing Chassis Dwg. #D77S5A

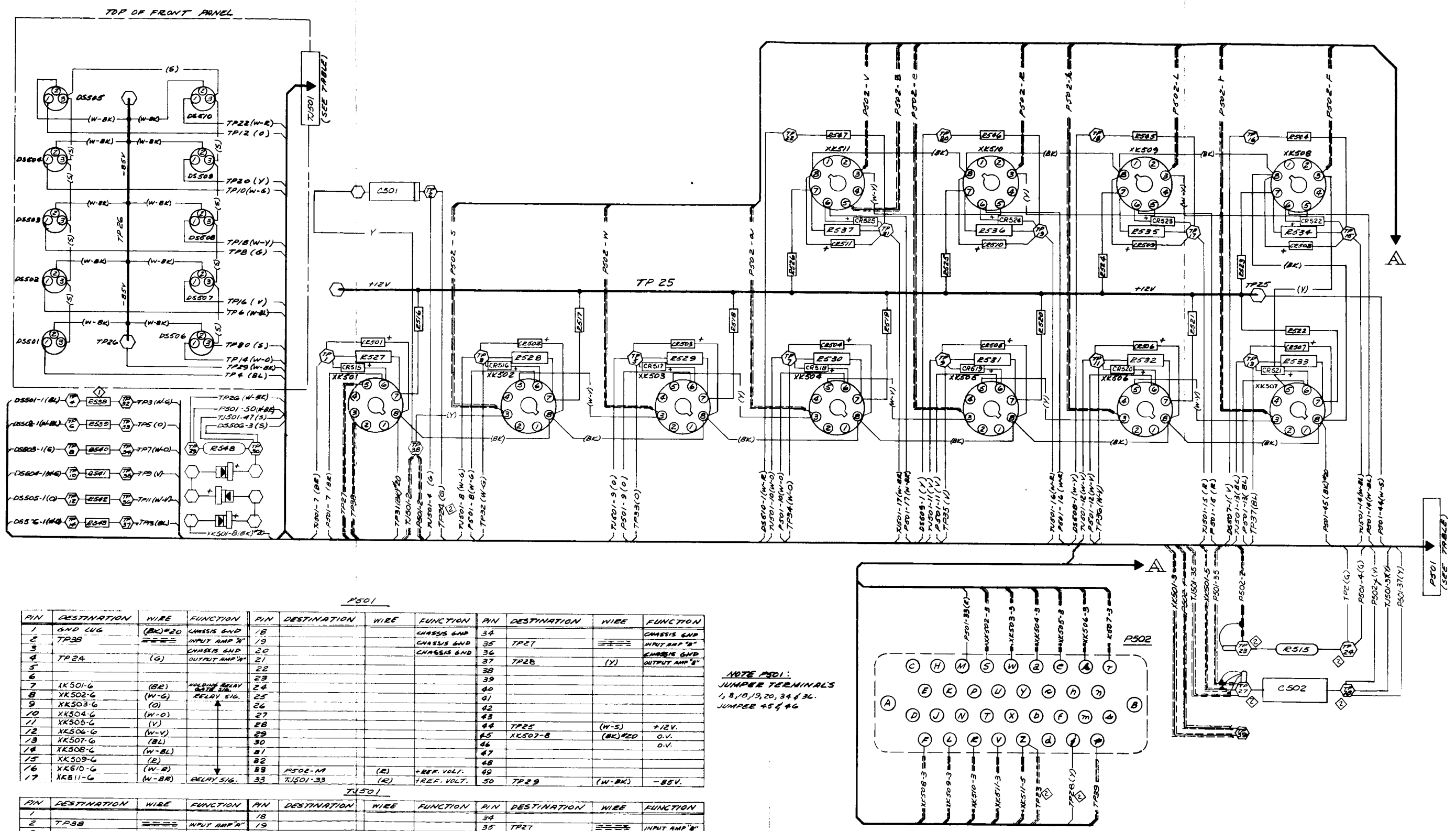

P501

PIN	DESTINATION	WIRE	FUNCTION	PIN	DESTINATION	WIRE	FUNCTION	PIN	DESTINATION	WIRE	FUNCTION
1	GND LUG	(BK)#20	CHASSIS GND	18			CHASSIS GND	34			CHASSIS GND
2	TP38	[illegible]	INPUT AMP "A"	19			CHASSIS GND	35	TP27	[illegible]	INPUT AMP "B"
3			CHASSIS GND	20			CHASSIS GND	36			CHASSIS GND
4	TP24	(G)	OUTPUT AMP "A"	21				37	TP28	(Y)	OUTPUT AMP "B"
5				22				38			
6				23				39			
7	XK501-6	(BR)	HOLDING RELAY GATE SIG.	24				40			
8	XK502-6	(W-G)	RELAY SIG.	25				41			
9	XK503-6	(O)		26				42			
10	XK504-6	(W-O)		27				43			
11	XK505-6	(V)		28				44	TP25	(W-S)	+12V.
12	XK506-6	(W-V)		29				45	XK507-8	(BK)#20	O.V.
13	XK507-6	(BL)		30				46			O.V.
14	XK508-6	(W-BL)		31				47			
15	XK509-6	(R)		32				48			
16	XK510-6	(W-R)		33	P502-M	(R)	+REF. VOLT.	49			
17	XK511-6	(W-BR)	RELAY SIG.	33	TJ501-33	(R)	+REF. VOLT.	50	TP29	(W-BK)	-85V.

TJ501

PIN	DESTINATION	WIRE	FUNCTION	PIN	DESTINATION	WIRE	FUNCTION	PIN	DESTINATION	WIRE	FUNCTION
1				18				34			
2	TP38	[illegible]	INPUT AMP "A"	19				35	TP27	[illegible]	INPUT AMP "B"
3				20				36			
4	TP2	(G)	OUTPUT AMP "A"	21				37	TP28	(Y)	OUTPUT AMP "B"
5				22				38			
6				23				39			
7	TP1	(BR)	HOLDING RELAY GATE SIG.	24				40			
8	TP3	(W-G)	RELAY SIG.	25				41			
9	TP5	(O)		26				42			
10	TP7	(W-O)		27				43			
11	TP9	(V)		28				44			
12	TP11	(W-V)		29				45			
13	TP13	(BL)		30				46			
14	TP15	(W-BL)		31				47	TP30	(S)	-2V
15	TP17	(R)		32				48			
16	TP19	(W-R)		33	P501-33	(R)	+REF. VOLT.	49			
17	TP21	(W-BR)	RELAY SIG.					50			

NOTE P501:
JUMPER TERMINALS
1, 8, 18, 19, 20, 34 & 36.
JUMPER 45 & 46

NOTES:
1. GROUND ONE END OF SHIELDED WIRE TO LUGS ON OCTAL SOCKET UNLESS OTHERWISE SPECIFIED.
2. [illegible] DENOTES SHIELDED WIRE TYPE 740, JEFFERSON PROD.
3. ALL WIRE TO BE #22 GAGE UNLESS OTHERWISE SPECIFIED.

Figure 7-5. Wiring Diagram, Data Summing Chassis, Dwg. #D77W5A

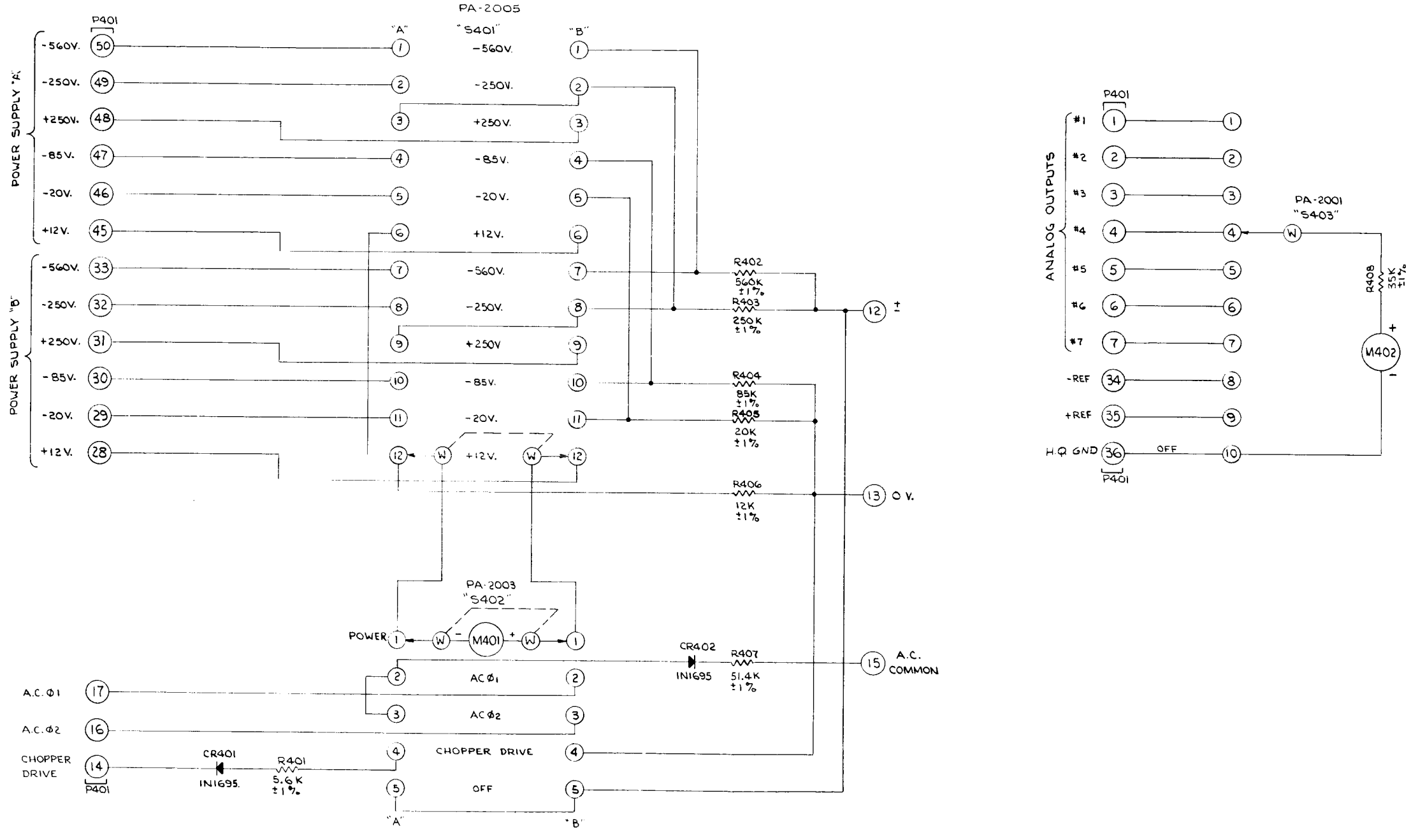

Figure 7-6. Schematic, Monitor Chassis, Dwg. #D77S4A

P401

PIN	DEST	WIRE	FUNC	PIN	DEST	WIRE	FUNC	PIN	DEST	WIRE	FUNC
1	S403-1	BR	ANALOG OUTPUT	18				34	S403-8	S	-REF
2	S403-2	O	#2	19				35	S403-9	R	+REF
3	S403-3	Y	#3	20				36	S403-10	BK	HQ GND
4	S403-4	G	#4	21				37			
5	S403-5	BL	#5	22				38			
6	S403-6	V	#6	23				39			
7	S403-7	W	#7	24				40			
8				25				41			
9				26				42			
10				27				43			
11				28	S401B-12	W-R	+12V	44			
12	TP7	BK	±	29	S401A-11	(W-S)20	-20V	45	S401B-6	W-R	+12 V.
13	TP11	(BK)20	0 V.	30	S401A-10	(S)20	-85V	46	S401A-5	(W-S)20	-20V
14	TP3	Y	CH.DR.	31	S401B-9	R	+250V	47	S401A-4	(S)20	-85V
15	TP1	W	A.C.COM.	32	S401A-8	S	-250V	48	S401B-3	R	+250V
16	S402B-3	W-S	AC #2	33	S401A-7	V	-560V	49	S401A-2	S	-250V
17	S402B-2	S	AC #1					50	S401A-1	V	-560V

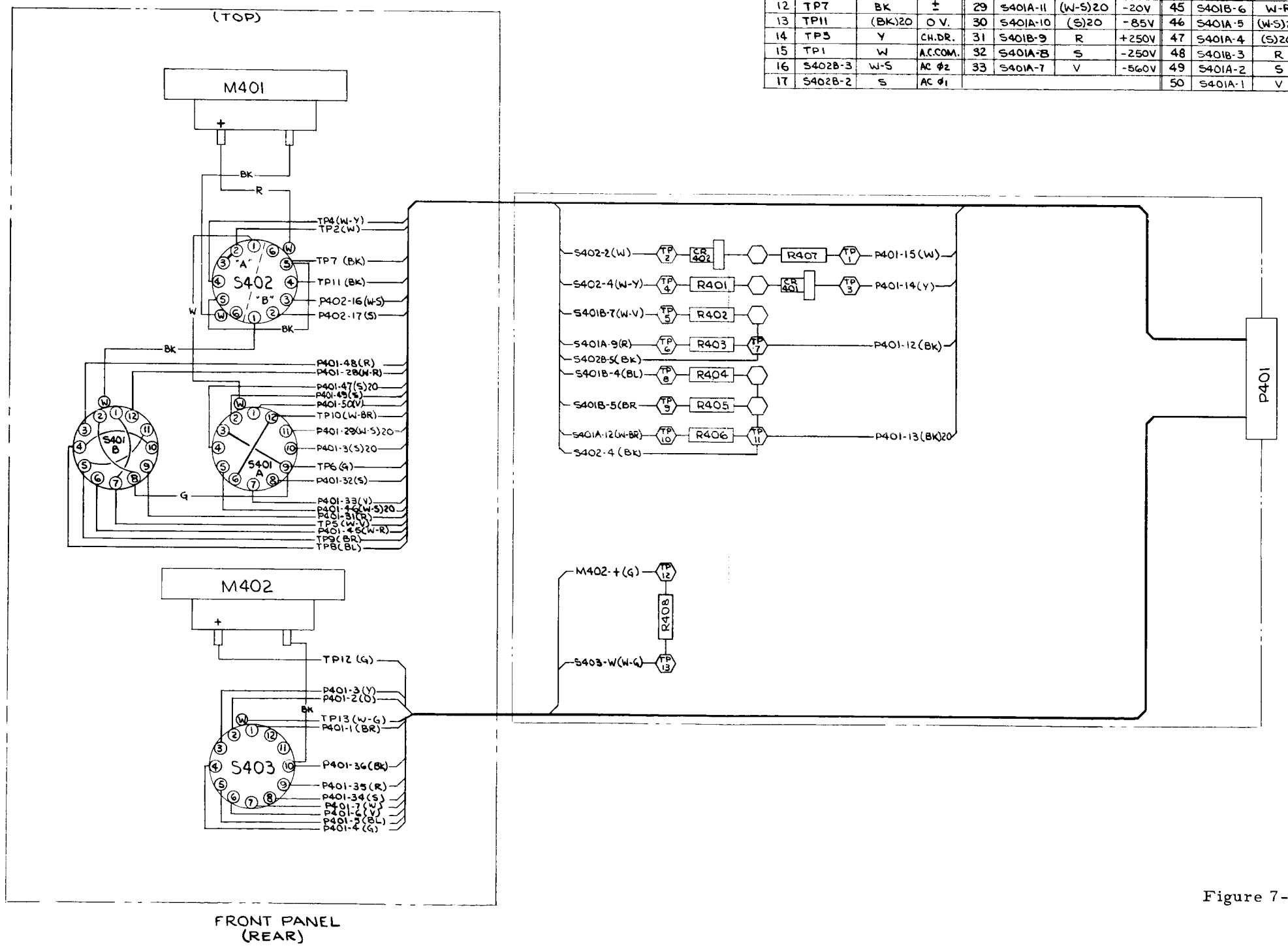

Figure 7-7. Wiring Diagram, Monitor Chassis, Dwg. #D77W4A

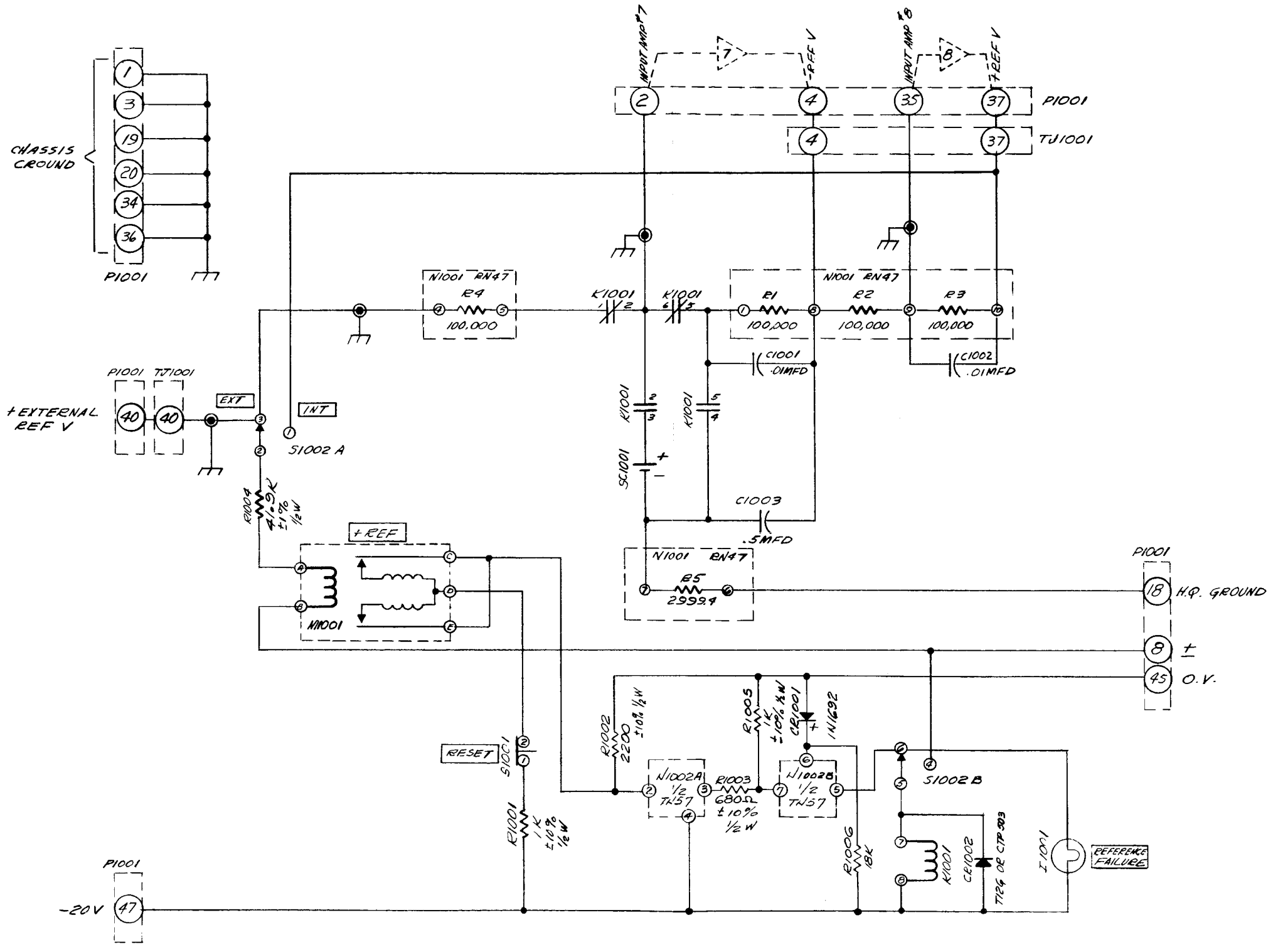

Figure 7-8. Schematic, Reference Chassis, Dwg. #C77S10A

PIN	DESTINATION	WIRE	FUNCTION
1	GND LUG	BK	CHASSIS GND
2	XK1001-2	COAX	INPUT AMP #7
3		W-V #20	CHASSIS GND
4	XN1001-8		-REF V
5			
6			
7			
8	S1002-4	BK	X
9			
10			
11			
12			
13			
14			
15			
16			
17			
18	XN1001-6	#20-BK	H.Q. GND
19			CHASSIS GND
20			CHASSIS GND
21			
22			
23			
24			
25			

PIN	DESTINATION	WIRE	FUNCTION
26			
27			
28			
29		W-V #20	
30			
31			
32			
33		BK	
34			CHASSIS GND
35	XN1001-9		INPUT AMP #8
36		COAX	CHASSIS GND
37	XN1001-10		+ REF V
38		W&#8 #20	
39			
40	XN1001-4		EXTERNAL REF V
41		COAX	
42			
43			
44			
45	TP-2		0 V
46		#20-BK	
47	XN1002-4		-20 V
48		#20-S	
49			
50			

PIN	DESTINATION	WIRE	FUNCTION
1			
2			
3			
4	XN1001-8		-REF V
5			
6			
7			
8			
9			
10			
11			
12			
13			
14			
15			
16			
17			
18			
19			
20			
21			
22			
23			
24			
25			

PIN	DESTINATION	WIRE	FUNCTION
26			
27			
28			
29		W-V #20	
30			
31			
32			
33			
34			
35			
36			
37	XN1001-10		+ REF V
38			
39			
40	XN1001-4		EXTERNAL REF V
41		COAX	
42			
43			
44			
45			
46			
47			
48			
49			
50			

NOTES:
1. ALL WIRE TO BE #22 GA. UNLESS OTHERWISE SPECIFIED
2. ═══ INDICATES COAX TYPE RG-174/U
3. (1) INDICATES TIE POINT
4. GROUND ONE END ONLY OF ALL COAX SHIELDS
5. JUMPER PINS #1, #3, #19, #20, #34 & 36 ON P1001

Figure 7-9. Wiring Diagram, Reference Chassis, Dwg. #C77W10A

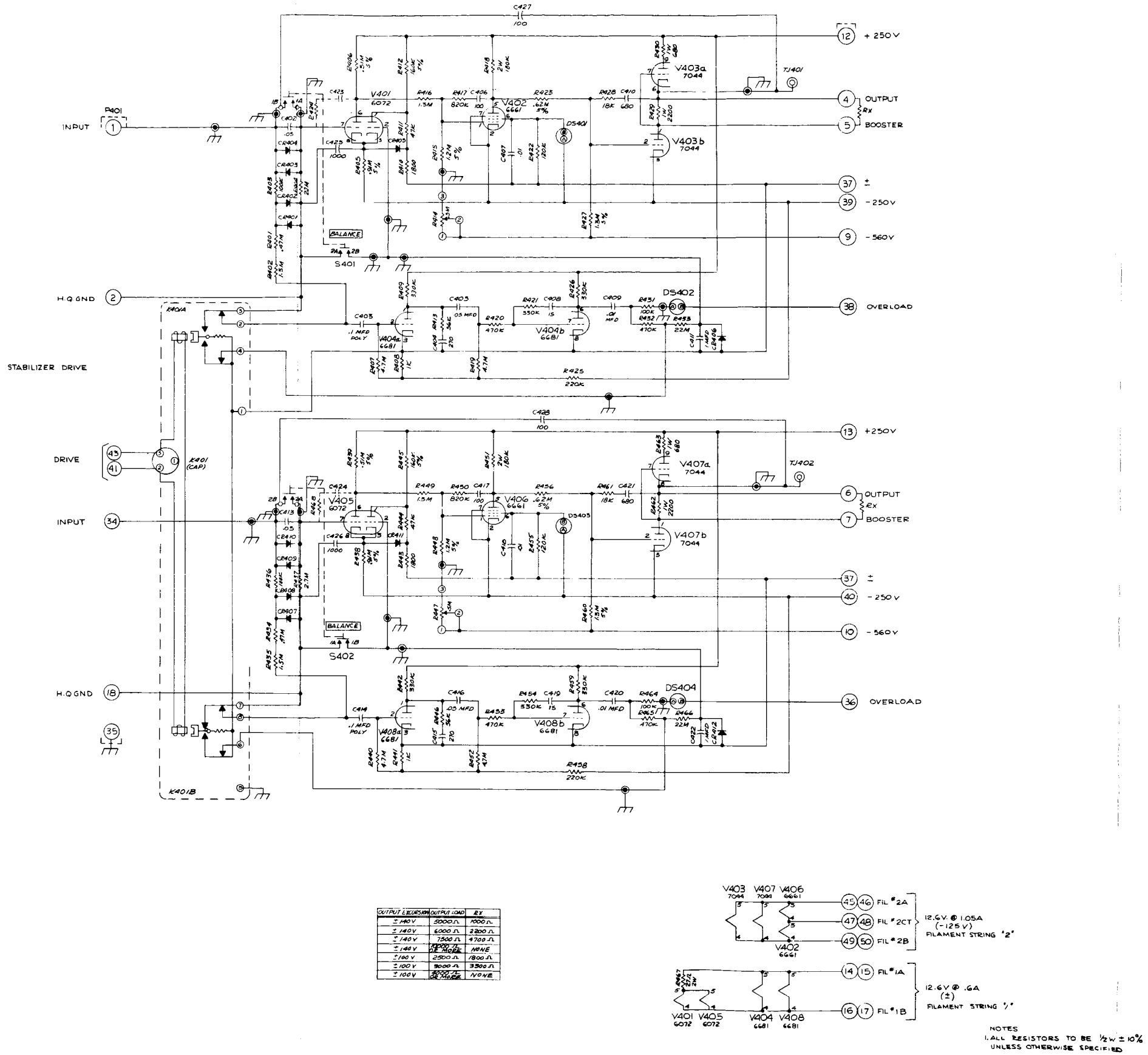

Figure 7-10. Schematic, DC Amplifier Chassis Dwg. #E63S4C

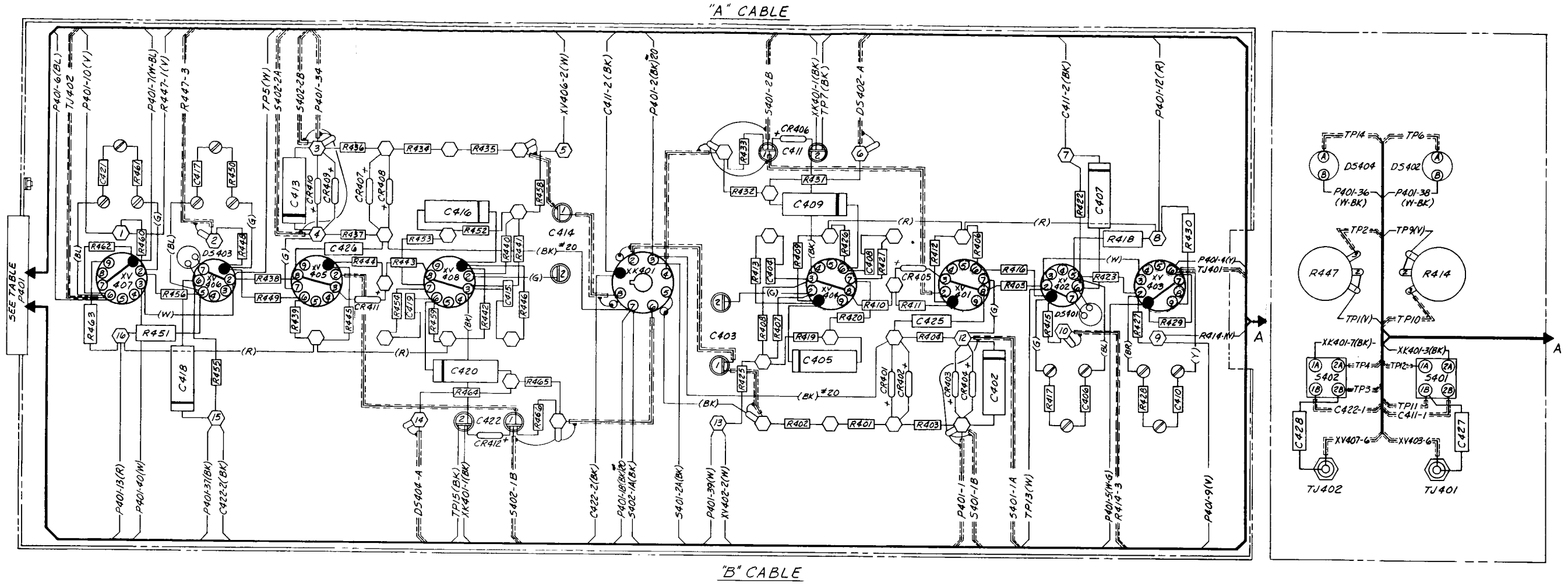

P401							
PIN	DESTINATION	FUNCTION	WIRE	PIN	DESTINATION	FUNCTION	WIRE
1	TP11	INPUT, AMP A	COAX	26			
2	XK401-3	H.Q. GND	BK #20	27			
3				28			
4	XV403-6	OUTPUT, AMP A	Y	29			
5	XV403-1	BOOST, AMP A	W-G	30			
6	XV407-6	OUTPUT, AMP B	BL	31			
7	XV407-1	BOOST, AMP B	W-BL	32			
8				33			
9	TP9	-560V	V	34	TP3	INPUT, AMP B	COAX
10	TP1	-560V	V	35		CHASSIS GND	BK #20
11				36	D5404-B	OVERLOAD, AMP B	W-BK
12	TP8	+250V	R	37	TP15	S. GND	W-BK
13	TP16	+250V	R	38	D5402-B	OVERLOAD, AMP A	BK
14	R461-1	FIL #1A	BR #22	39	TP13	-250V	W #22
15				40	XV407-3	-250V	W #22
16	XV401-4	FIL #1B	(W-BR) #22	41	XK401-2(CAP)	DRIVE	BK
17				42			
18	XK401-7	H.Q. GND	BK #20	43	XK401-3(CAP)	DRIVE	S
19				44			
20				45	XV407-5	FIL-2A	BK #22
21				46		FIL-2A	
22				47	XV406-4	FIL-2CT	W #22
23				48		FIL-2CT	
24				49	XV407-4	FIL-2B	(W-HI) #22
25				50		FIL-2B	

NOTE 3

NOTE 3

NOTES:
1. ALL WIRE TO BE #22 GA. UNLESS OTHERWISE NOTED.
2. ▬▬ INDICATES RG/174U COAX.
3. JUMPER PINS ON P401 AS SHOWN.
4. SEE SHEET NO. 2 FOR FILAMENT CABLE LAYOUT.
5. DO NOT TWIST DIODE LEADS.

Figure 7-11. Wiring Diagram, DC Amplifier Chassis Dwg. #D63W4C, Sheet #1

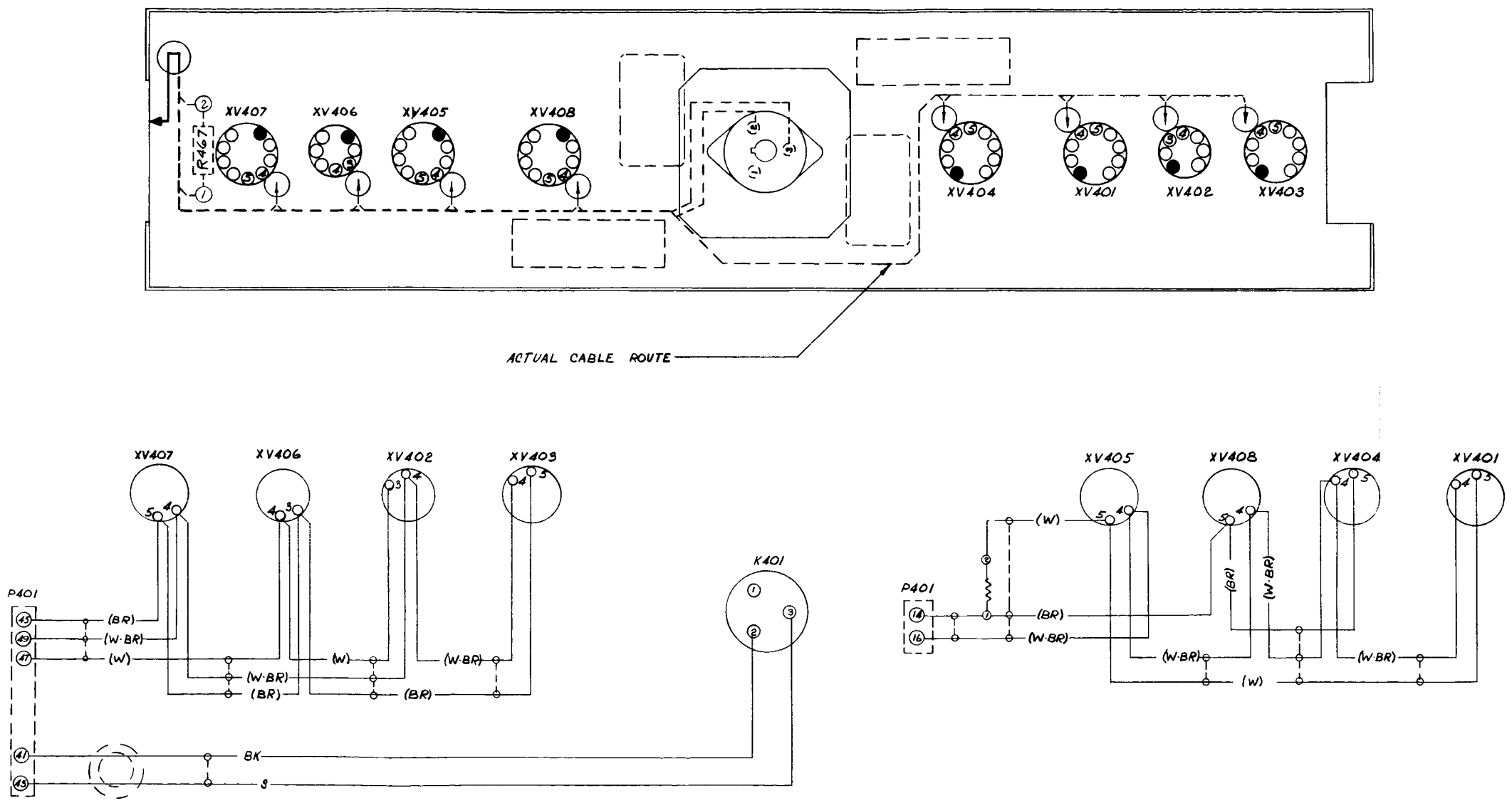

NOTES:
1.) ALL WIRES TO BE #22 GAUGE
2.) S--- INDICATES TWISTED WIRES.
3.) FOR PLACEMENT OF CABLE, REFER TO ACTUAL CABLE ROUTE.

Figure 7-12. Wiring Diagram,
DC Amplifier Chassis
Dwg. #63W4C, Sheet #2

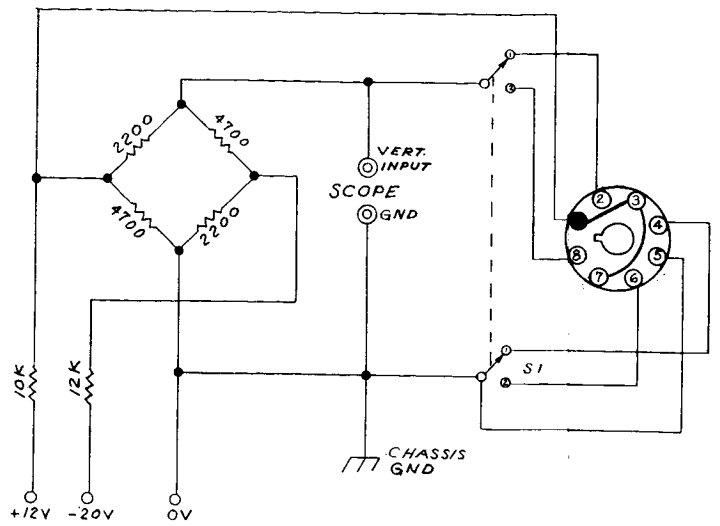

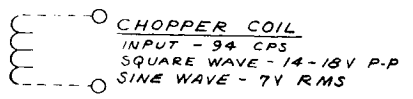

NOTE

1. VOLTAGE INPUTS SHOWN ARE AVAILABLE FROM THE MEC MODEL 165-8A POWER SUPPLY. THIS UNIT MAY BE OPERATED BY ANY OTHER SOURCE HAVING THE REQUIRED VOLTAGE (32 VOLTS) AND A FLOATING GND, AND CONNECTED BETWEEN THE +12V AND -20V INPUTS.
2. BY POSITIONING SWITCH S1 ALTERNATE SIDES OF CHOPPER MAY BE VIEWED.

CHOPPER INTERNAL CONNECTIONS

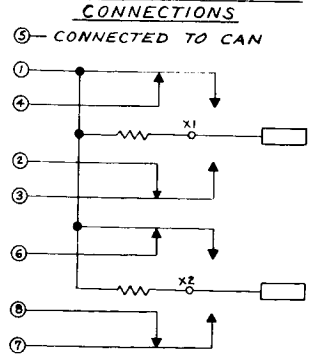

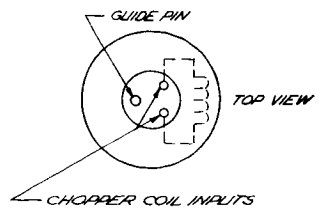

NORMAL PATTERN

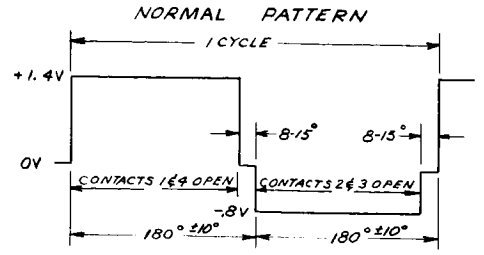

FOR ONE CYCLE EQUAL TO 8 DIVISIONS ON SCOPE: TIME PER CYCLE ≅ 11 MSEC, EACH DIVISION ≅ 45°, USING 5X EXPANDER-EACH DIVISION ≅ 9°

ABNORMAL PATTERNS

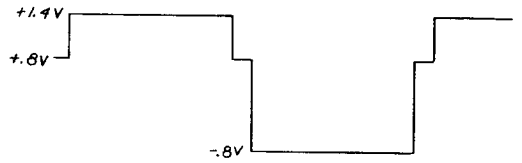

CAUSE: CONTACTS 1&4 BREAK BEFORE 2&3 MAKE OR 2&3 BREAK BEFORE 1&4 MAKE

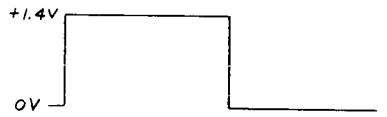

CAUSE: CONTACTS 2&3 NEVER BREAK

CAUSE: CONTACTS 1&4 NEVER MAKE

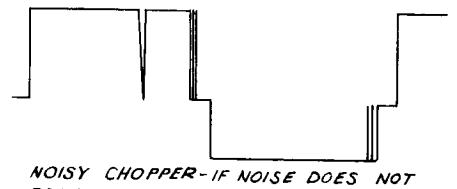

NOISY CHOPPER-IF NOISE DOES NOT BREAK LINE IT PROBABLY WILL NOT EFFECT AMPLIFIER.
CHATTER-2° MAXIMUM OCCURRING DURING FIRST OR LAST 5° OF CONTACT CLOSURE TIME.
CAUSE - CONTACT BOUNCE, DIRTY CONTACTS.
CURE - TRY READJUSTING, REPOSITIONING OR BURNISHING CONTACTS.

Figure 7-13. Schematic, Mechanical Converter Test Set Dwg. #63S4BX

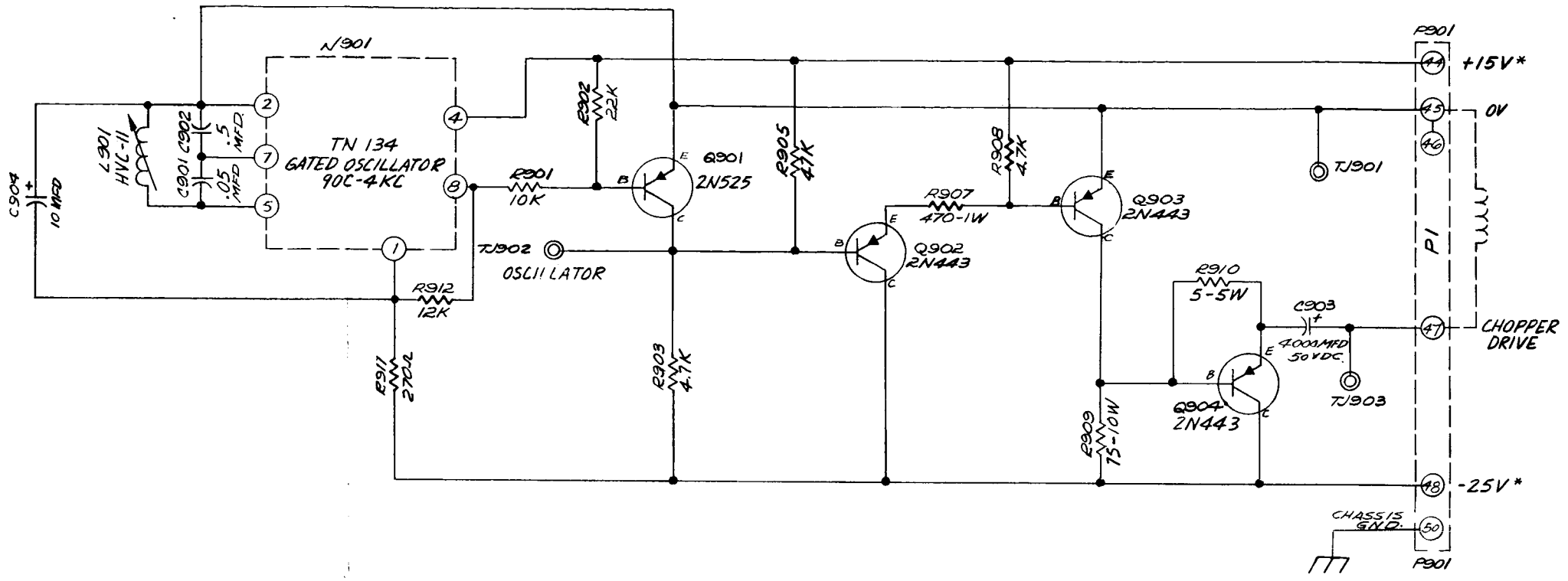

NOTE:

1. ALL RESISTORS ½ W, ± 10% UNLESS OTHERWISE SPECIFIED.
2. * THIS UNIT MAY BE UTILIZED WITH MILGO POWER SUPPLY 165-4A WHICH SUPPLIES +12V & -20V.

Figure 7-14. Schematic,
Chopper Drive Chassis
Dwg. #C77S9B

Figure 7-15. Wiring Diagram, Chopper Drive Chassis Dwg. #D77W9B

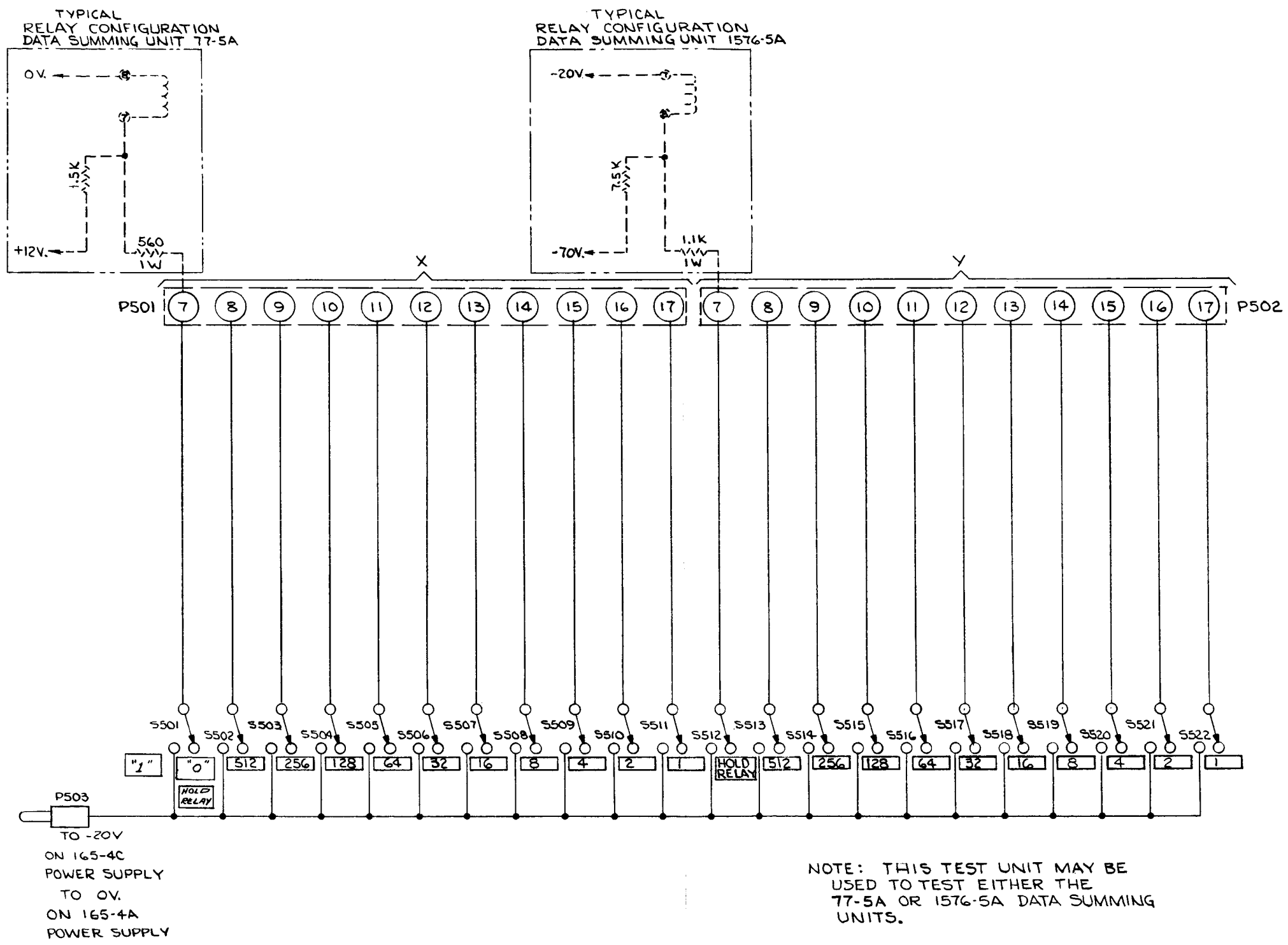

Figure 7-16. Schematic,
D-A Test Control Unit,
Dwg. #C77S5AAA

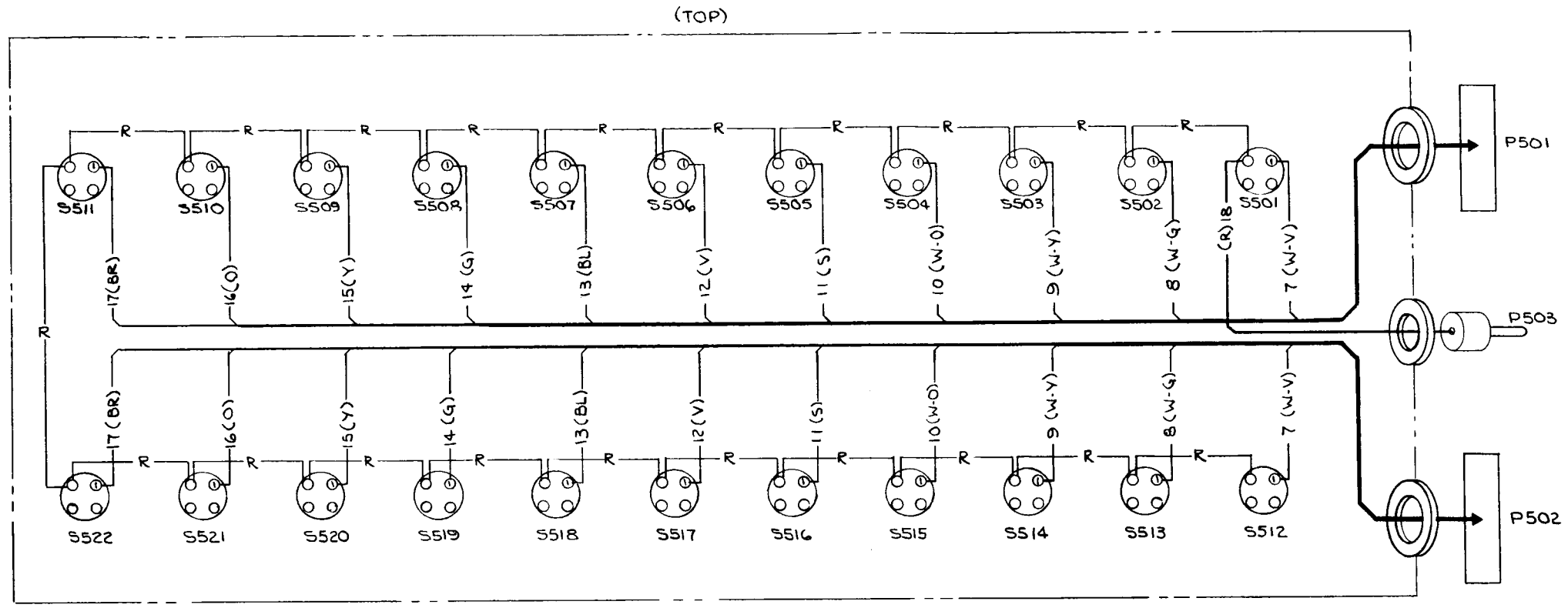

ALL WIRE TO BE #22 GA. UNLESS OTHERWISE SPECIFIED.

P501 (X TEST)			
PIN	DESTINATION	FUNCTION	WIRE
1			
2			
3			
4			
5			
6			
7	S501-1	X HOLD RELAY	W-V
8	S502-1	1 BIT RELAY	W-G
9	S503-1	2	W-Y
10	S504-1	4	W-O
11	S505-1	8	S
12	S506-1	16	V
13	S507-1	32	BL
14	S508-1	64	G
15	S509-1	128	Y
16	S510-1	256	O
17	S511-1	512	BR

P502 (Y TEST)			
PIN	DESTINATION	FUNCTION	WIRE
1			
2			
3			
4			
5			
6			
7	S512-1	Y HOLD RELAY	W-V
8	S513-1	1 BIT RELAY	W-G
9	S514-1	2	W-Y
10	S515-1	4	W-O
11	S516-1	8	S
12	S517-1	16	V
13	S518-1	32	BL
14	S519-1	64	G
15	S520-1	128	Y
16	S521-1	258	O
17	S522-1	512	BR

Figure 7-17. Wiring Diagram, D-A Test Control Unit, Dwg. #C77W5AAA

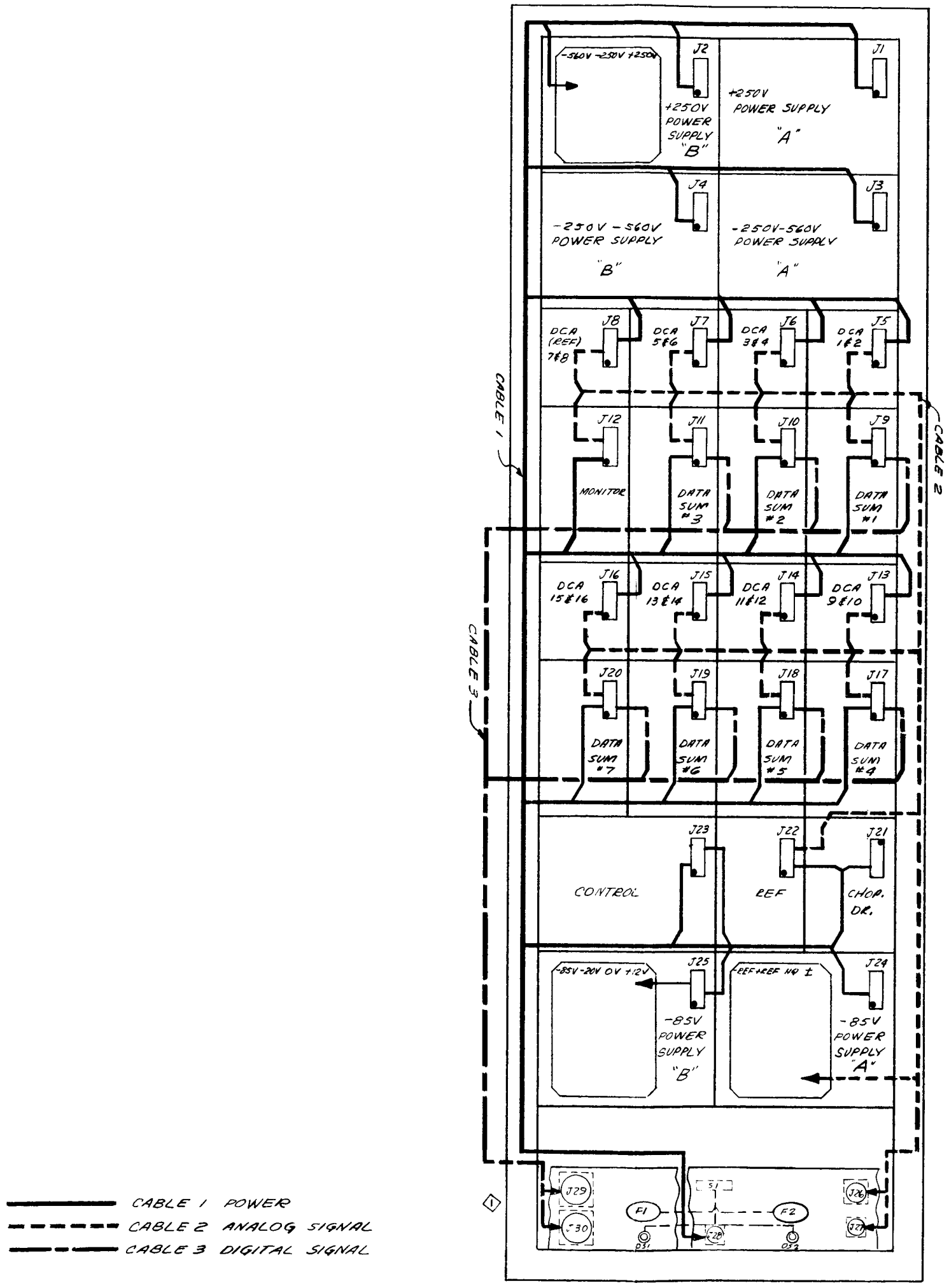

CABLE 1 POWER
CABLE 2 ANALOG SIGNAL
CABLE 3 DIGITAL SIGNAL

Figure 7-18. Wiring Diagram, D-A Converter Rack, Dwg. #C77W1AA

CHAPTER VIII

APPENDIX

TRANSISTOR POWER SUPPLY

MEC MODEL 165-4C

1. GENERAL DESCRIPTION

A Milgo type 165-4C Power Supply has three outputs: the first, a +12v, (+1v, -3v) at 1 ampere output; the second, a -20v, (+2v, -6v) at 2 amperes output; and the third, a -65v (±5v) at one ampere output. The -65v supply is stacked on the bottom of the -20v supply, thereby giving an output of -85v. The a-c input of this supply can vary from 100vac to 130vac and from 45 to 60 cycles. The unit is mounted in a standard Milgo slide-type rack and has a front panel 8-3/4 inches high by 8-7/8 inches wide. Its weight is approximately 35 pounds.

2. 12v SUPPLY

2-1. A portion of the output of transformer T401 is rectified by a bridge rectifier CR401 and filtered by resistor R401 and capacitors C401 and C402. The voltage across capacitors C401 and C402 is normally 20v (approximate). Transistor Q401 and resistors R402 and R403 act as a variable resistance element in series with the output load, which can be varied to maintain a constant output voltage across a variable load. As the load current increases, the effective resistance of Q401 is decreased so that the IR drop across R402, R403, and Q401 will remain constant producing a constant output voltage. If the input a-c line voltage should increase, the d-c voltage across filtered capacitors C401 and C402 would increase and the effective resistance of Q401 must increase again so that the output voltage will remain constant.

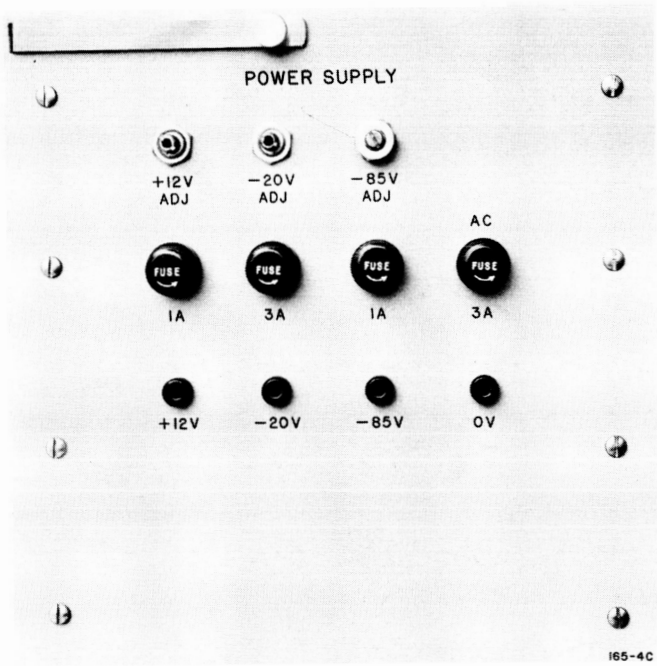

Transistor Power Supply

2-2. The effective resistance of Q401 is controlled by the control section, consisting of transistors Q402, Q403, Q404, and their associated circuitry. Q404 determines whether the output voltage is too high or too low and is followed by power amplifiers Q403 and Q402, which amplify the control signal to the necessary power level for driving Q401. The base voltage of Q404 is referenced from the output of 4.7v zener diode CR402. The emitter voltage of Q404 is determined by the resistor divider network of R413, R414, and R415. The voltage from the wiper of potentiometer R414 is applied to the emitter of Q404.

2-3. As the output voltage increases, the magnitude of the voltage from the wiper of R414 will also increase proportionally. Since the output across zener diode CR402 remains constant as the output voltage increases, the emitter voltage tends to go positive with respect to the base voltage, driving Q404 toward cutoff. As Q404 goes toward cutoff, there is less collector current through R410, so there is less base current in Q403. The emitter current of Q403 decreases, reducing the current through R407 and base current of Q402. With less base current in Q402, the emitter current decreases, reducing the base current of Q401. With less base current, the effective resistance of Q401 will increase. Therefore, the output voltage decreases until Q404 senses the correct relationship between the output voltage and the zener voltage of CR402.

2-4. If the output voltage decreases below the desired value, the portion of the output voltage applied to the emitter of Q404 also decreases, tending to make the emitter more negative with respect to the base. This increases the collector current of Q404, which increases the base current of Q403, thus increasing the emitter current of Q403 and the base current of Q402. This in turn increases the emitter current of Q402 and the base current of Q401, which reduces the effective resistance of Q401, causing the output voltage to return to its regulated value. Q404 actually is matching the zener voltage to the emitter voltage.

2-5. Since a portion of the output voltage applied to the emitter of Q404 can be varied by potentiometer R414, and the emitter voltage of Q404 is to remain constant, the output voltage must be changed as the resistor R414 is changed. In this manner, the regulated output voltage can be adjusted over a range of +9v to +13v. Capacitor C403 has been added to prevent hunting. Resistors R402 and R403 are included to limit the peak current through transistor Q401 to a safe value if the output terminal is short circuited, and to provide reverse bias for Q401 and Q402. Resistor R404 provides a path for the leakage current of Q402 so that this current does not affect the base current in Q401, allowing Q401 to be more nearly cut off during a light load.

3. MINUS 20v SUPPLY

3-1. A second portion of the output of transformer T401 is rectified by bridge rectifier CR421 and filtered by parallel resistors R421A and R421B, and capacitors C421, C422, and C423. The d-c voltage across capacitors C421, C422, and C423 is 30v (approximate). Transistors Q421 and Q422 with their associated resistors R423, R424, and R422 act as a variable resistance element in series with the output load, which can be varied to maintain a constant

output voltage across a variable load. As the load current increases, the effective resistance of Q421 and Q422 is decreased so that the IR drop across R422, R423, R424, Q421, and Q422 will remain constant, producing a constant output voltage.

3-2. If the input a-c line voltage should increase, the d-c voltage across filter capacitors C421, C422, and C423 would increase, and the effective resistance of Q421 and Q422 must increase again to keep the output voltage constant. The effective resistance of Q421 and Q422 is controlled by the control section, consisting of transistors Q423, Q424, and Q425 and their associated circuitry. Transistor Q425 determines whether the output voltage is too high or too low and is followed by power amplifiers Q424 and Q423, which amplify the control signal to the necessary power level for driving Q421 and Q422. The base voltage of Q425 is referenced from the output by a 4.7v zener diode CR422. The emitter voltage of Q425 is determined by a resistor divider network R434, R435, and R436. The voltage from the wiper of potentiometer R435 is applied to the emitter of Q425.

3-3. As the output voltage increases, the magnitude of the voltage from the wiper of R435 will increase proportionally. Since the output across CR422 remains constant as the output voltage increases, the emitter voltage tends to become positive with respect to the base voltage, driving Q425, which is an NPN transistor, toward cutoff. As Q425 goes toward cutoff, there is less collector current through R431, and consequently, there is less base current in Q424. With less base current in Q424, the emitter current of Q424 decreases. With less emitter current in Q424, the current through R428 and the base current of Q423 also decrease. This reduces the emitter current in Q423 and reduces the base current in Q421 and Q422. Less base current in Q421 and Q422 increases their effective resistance, which increases the IR drop across them. Therefore, the output voltage decreases until Q425 senses the correct relationship between the output voltage and the zener voltage of CR422.

3-4. Conversely, if the output voltage decreases below the desired value, the portion of the output voltage applied to the emitter of Q425 also decreases, tending to make the emitter more negative with respect to the base. This increases the collector current of Q425, increasing the base current of Q424, which in turn increases the emitter current of Q424 and the base current of Q423. This, in turn, increases the emitter current of Q423 and the base current of Q421 and Q422, reducing the effective resistance of Q421 and Q422, and causing the output voltage to return to its regulated value. Transistor Q425 is actually matching the zener voltage to the emitter voltage.

3-5. Since a portion of the output voltage applied to the emitter of Q425 can be varied by potentiometer R435, and the emitter voltage of Q425 is to remain constant, the output voltage will have to be changed as the resistor R435 is changed. In this manner, the regulated voltage of this supply can be adjusted from -14v to -22v. Capacitors C425 and C424 provide feedback for stabilization purposes.

3-6. Resistors R423 and R424 serve two functions. First, they force the collector current of Q421 and Q422 to balance. Since the bases are tied in common, if one transistor conducts

more than the other, the higher IR drop in their associated resistor would tend to reverse bias the transistor with the most current and, in this manner, force the currents to balance. Second, if the output supply is shorted, resistors R422, R423 and R424 limit the peak current through Q421 and Q422 to a safe value while fuse F402 is melting. Resistor R425 provides a path for the leakage current of Q423 so that this leakage current does not affect the base current in Q421 and Q422. This allows Q421 and Q422 to be more nearly cut off during a light load.

4. MINUS 65v SUPPLY

4-1. A third portion of the output of transformer T401 is rectified by a bridge rectifier CR441 and filtered by resistor R441 and capacitors C441 and C442. The voltage across capacitor C441 and C442 is normally 75v (approximate). Transistor Q441, and resistors R442 and R443, act as a variable resistance element in series with the output load, which can be varied to maintain a constant output voltage across a variable load. As the load current increases, the effective resistance of Q441 is decreased so that the IR drop across R442, R443, and Q441 will remain constant, producing a constant output voltage. If the input a-c line voltage increases, the d-c voltage across filtered capacitors C441 and C442 will increase and the effective resistance of Q441 must increase again so that the output voltage will remain constant.

4-2. The effective resistance of Q441 is determined by the control section, consisting of transistors Q442, Q443, and Q444 and their associated circuitry. Q444 determines whether the output voltage is too high or too low and is followed by power amplifiers Q443 and Q442. These amplify the control signal to the necessary power level for driving Q441. The emitter voltage of Q444 is referenced from the output by a 12v zener diode CR442. The base voltage of Q444 is determined by the resistor divider network of R452, R453, and R454. The voltage from the wiper of potentiometer R453 is applied to the base of Q444. The zener is referenced from the positive side of this supply to reduce the emitter-to-collector voltage of Q443 and Q444 to less than 25v.

4-3. As the output voltage increases, the magnitude of the voltage from the wiper of R453 will also increase proportionally. Since the output across zener diode CR442 remains constant as the output volts increase, the base voltage tends to become negative with respect to the emitter voltage, driving Q444 toward cutoff. As Q444 goes toward cutoff, there is less collector current through R450 and less base current in Q443. The emitter current of Q443 decreases, reducing the current through R447 and the base current of Q442. With less base current, the Q442 emitter current decreases, reducing the base current of Q441. With less base current, the effective resistance of Q441 increases. Therefore, the output voltage decreases until Q444 senses the correct relationship between the output voltage and the zener voltage of CR442.

4-4. If the output voltage decreases below the desired value, the portion of the output voltage applied to the base of Q441 also decreases, tending to make the base more positive

with respect to the emitter. This increases the collector current of Q444, increasing the base current of Q443, and increasing the emitter current of Q443 and the base current of Q442. This in turn increases the emitter current of Q442 and the base current of Q441, reducing the effective resistance of Q441, and causes the output voltage to increase and to return to its regulated value. Q444 is actually matching the zener voltage to the base voltage.

4-5. Since a portion of the output voltage applied to the base of Q444 can be varied by potentiometer R453, and the base voltage of Q444 is to remain constant, the output voltage will have to be changed as the resistor R453 is changed. In this manner, the regulated output voltage can be adjusted over a range of -60v to -70v. Capacitors C443 and C444 have been added to prevent hunting. Resistors R442 and R443 are included to limit the peak current to transistor Q441 to a safe value if the output terminal is short circuited, and to provide reverse bias for Q441. Resistor R444 provides a path for the leakage current of Q442 so that this current does not affect the base current in Q441. This allows Q441 to be more nearly cut off during a light load. This -65v power supply is stacked on the bottom of the -20v supply giving a combined output of -85v.

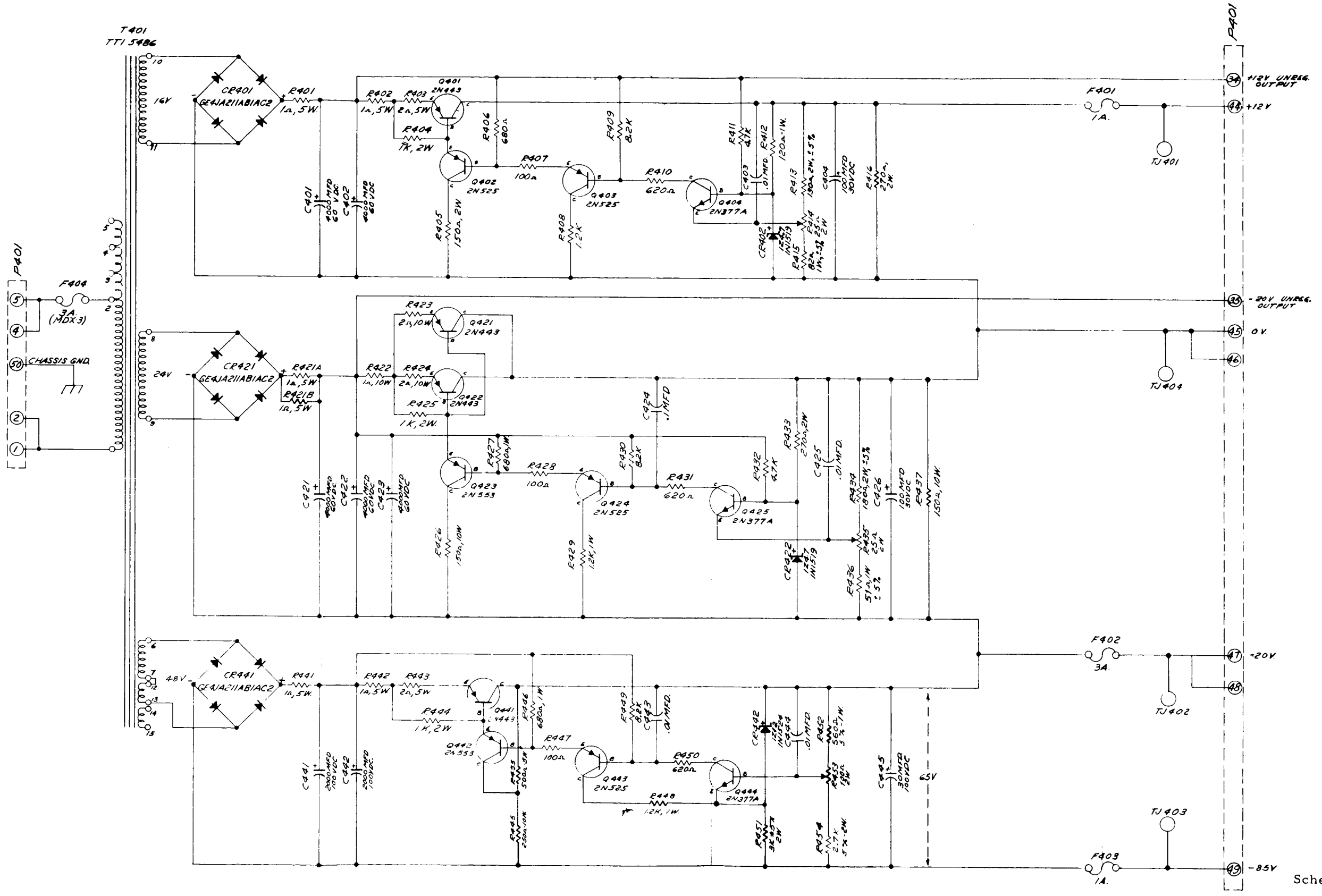

Schematic
165-4C Power Supply
Dwg. #D165S4C

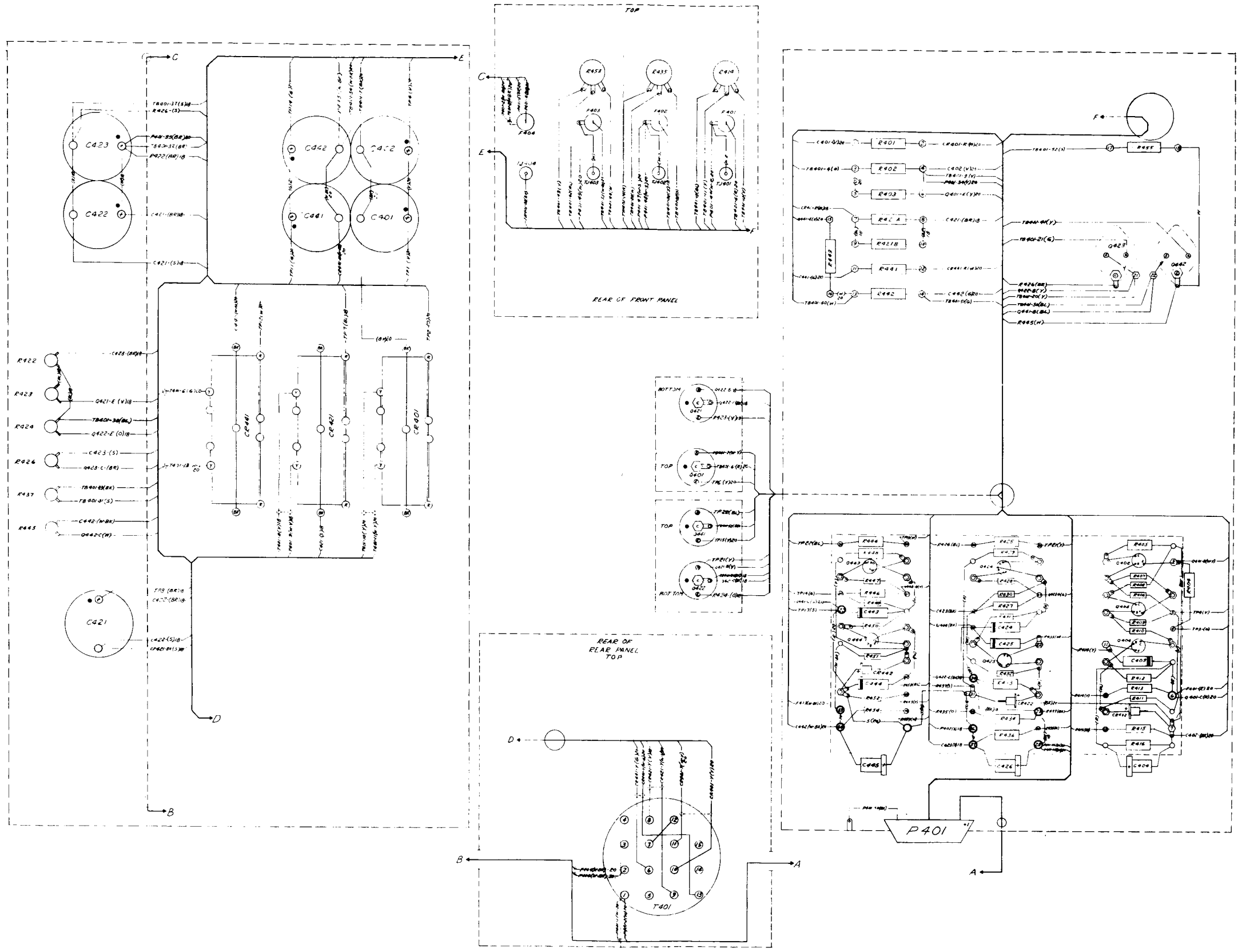

P401							
PIN	DEST	FUNCTION	WIRE	PIN	DEST	FUNCTION	WIRE
1	T401-1	AC INPUT	(W) 20	41			
2	T401-1	AC INPUT	(W) 20	42			
3				43			
4	P404	AC INPUT	(BR) 20	44	P401	+12 V	(W-R) 20
5	P404	AC INPUT	(BR) 20	45	TB401-25	0 V	(BK) 20
6				46	TB401-25	0 V	(BK) 20
7				47	P402	-20 V	(W-S) 20
8				48	P402	-20 V	(W-S) 20
49	[illegible]	[illegible]	[illegible] 20	49	P403	-18 V	(Y) 20
50	CHASSIS	CHASSIS GND	(BK) 20	50	CHASSIS	CHASSIS GND	(BK)

NOTES
1. ALL WIRE 22GA UNLESS SPECIFIED
2. ALL AC WIRES TO BE TWISTED IN PAIRS.

Wiring Diagram
165-4C Power Supply
Dwg. #E165W46

-250v, -560v POWER SUPPLY

MEC MODEL 1576-3A

1. GENERAL DESCRIPTION

1-1. The -250v, 250ma, -560v, 15ma, Power Supply has 3 outputs, -250v, -560v and 12.6vac, center tapped, which is capable of furnishing 7 amperes to external filament circuits. The primary windings of transformers T301 and T302 are tapped to compensate for high or low line voltages. If the line voltage is predominantly high, (125v or greater) the taps should be moved from terminal 3 to terminal 4. If the line voltage is low (105v or less) the taps should be moved from terminal 3 to terminal 2. An amber indicator DS302, labeled FILAMENT and a red indicator DS301, labeled PLATE indicate that transformers T302 and T301 have been energized. Input and output fuses, and a -250v adjust potentiometer, R327 are provided. The output of transformer T301 is full wave rectified by silicon diodes CR301 through CR308, filtered by inductor L301, capacitors C301, C305 and C306, and applied to the plates of series regulator tubes V301-V303, which regulate the output to -250v. Resistors R301 and R302 insure equal division of voltage between capacitors C305 and C306.

1-2. The output from terminal 5 of T301 is applied to a negative half wave rectifier consisting of silicon diodes CR309-CR312, then on to a filter consisting of inductor L302, capacitors C302-C304 and C307, and resistor R305 and applied to VR tubes V306 and V307, which are placed across the -250v, -560v outputs. Resistors R303 and R304 insure an equal division of voltage between capacitors C303 and C304, and resistor R332 insures proper firing of the VR tubes when power is turned on.

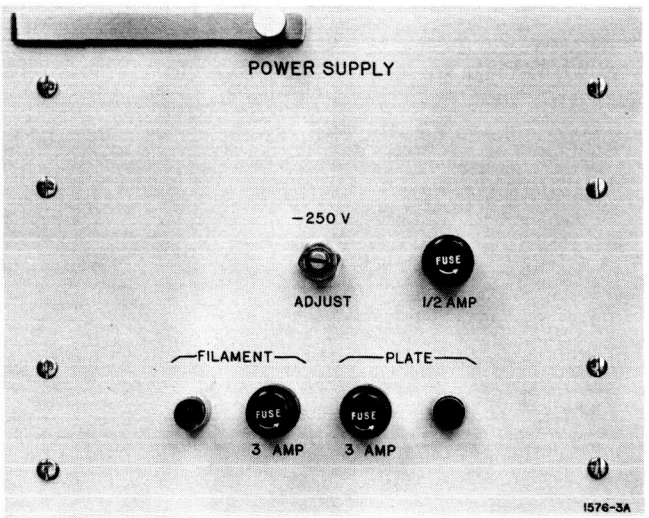

-250v, -560v Power Supply

2. DETAILED DESCRIPTION

The -310v generated by VR tubes V306 and V307 of the -250v Power Supply is applied to a resistor divider consisting of resistors R326, R327 and R328. This resistor string compares the VR tube output to the -250v output. The error voltage appearing on the wiper of potentiometer R327 is amplified by tube V305 and directly coupled to amplifier tube V304 which in turn drives the grids of the three series regulator tubes V301-V303. If the -250v output increases, pin 7 of V305 goes more positive with respect to pin 8 of V305. Pin 6 plate of V405 becomes more negative, and the pin 1 plate of V405 becomes more positive, causing the plates, pin 1 and 6 of V404 to become more negative. This causes the grids of the three regulator tubes to become more negative, and since these regulators act essentially as cathode followers, their cathodes also become more negative, thereby reducing the output voltage. Similarly, if the output voltage were to go negative, the grids of the three regulator tubes would go positive tending to cause the output voltage to remain constant. Should a change occur in the -560v power supply voltage, the -250v Supply will change proportionally due to the resistor divider R326, R327 and R328, thus keeping the supply voltages to the DC Amplifiers balanced.

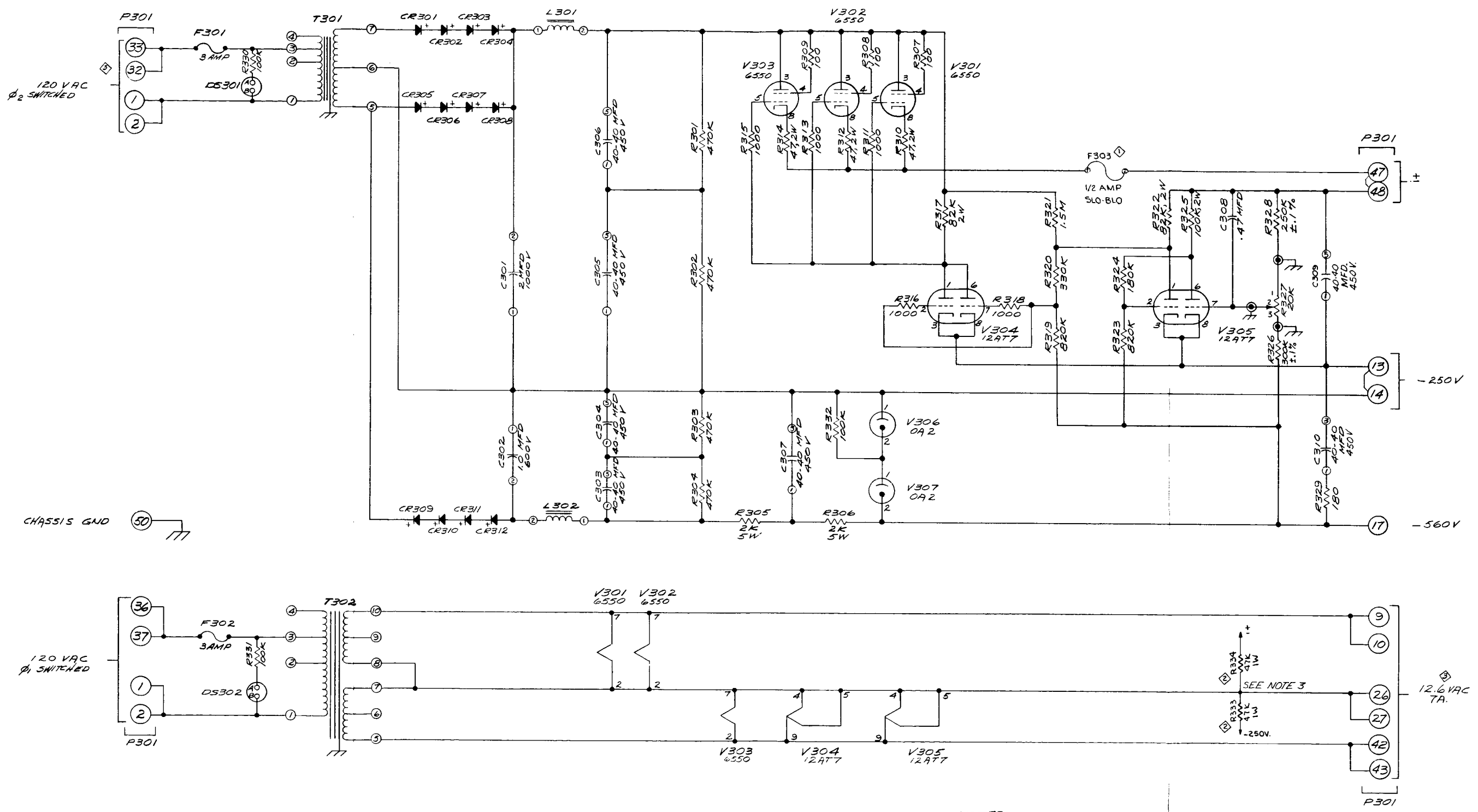

NOTES:
1. ALL RESISTORS TO BE ½ W, ±10% UNLESS OTHERWISE SPECIFIED.
2. CR301-CR312 ARE 1N1635.

Schematic
1576-3A Power Supply
Dwg. #D1576S3A

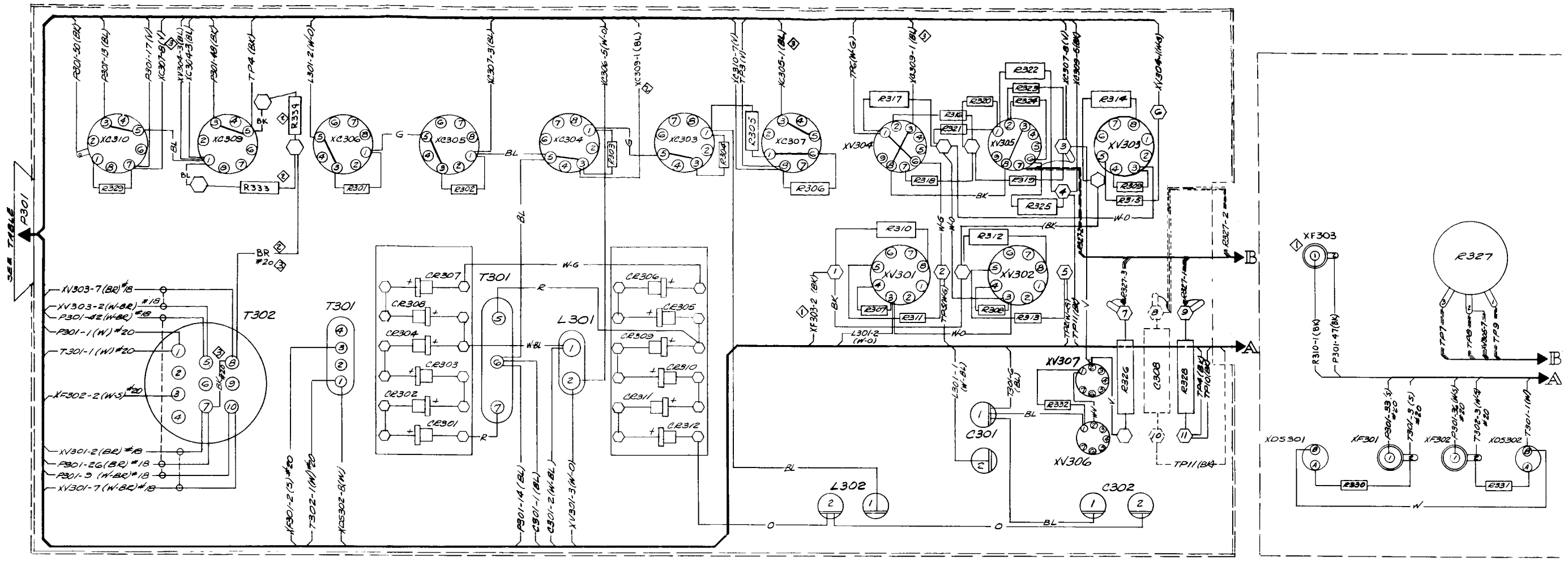

P301					
TERM	DESTINATION	FUNCTION	TERM	DESTINATION	FUNCTION
1	T302-1 (W) #20	120 VAC	26	T302-7 (BR) #18	FIL CT
2			27		
3			28		
4			29		
5			30		
6			31		
7			32		
8			33	XF301-1 (S) #20	120 VAC
9	T302-10 (W-BR) #18	12.6 VAC	34		
10			35		
11			36	XF302-1 (W-S) #20	120 VAC
12			37		
13	XD310-3 (BL)	-250	38		
14	T301-4 (BL)		39		
15			40		
16			41		
17	XD310-7 (V)	-560	42	T302-5 (W-BR) #18	12.6 VAC
18			43		
19			44		
20			45		
21			46		
22			47	XF303-1 (BK)	FGND
23			48	XD309-3 (BR)	
24			49		
25			50	JUMPER GND R330	

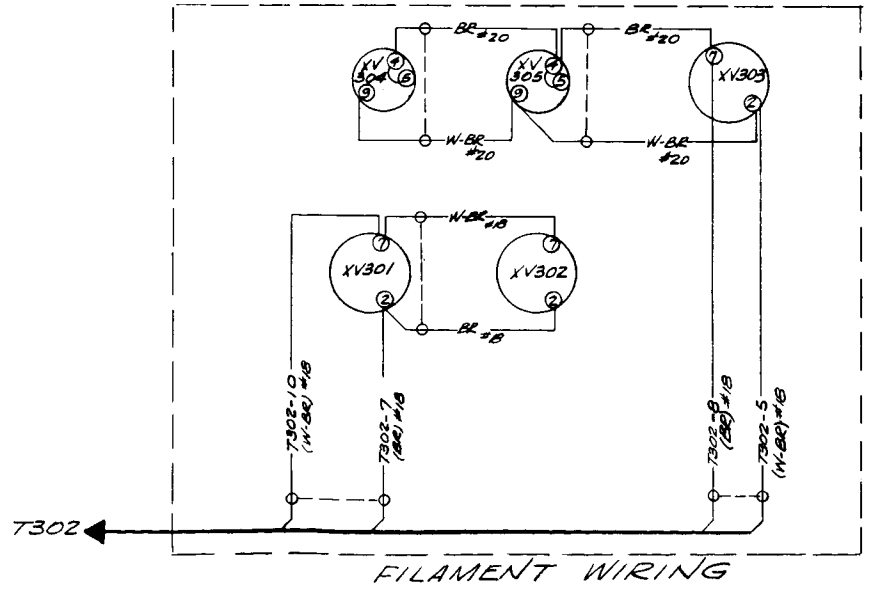

NOTES:
1. ALL WIRE TO BE #22 GA. UNLESS OTHERWISE SPECIFIED
2. ▬▬ INDICATES RG174/U COAX
3. ⓥ INDICATES TIE POINT
4. O—O INDICATES TWISTED PAIRS

Wiring Diagram
1576-3A Power Supply
Dwg. #D1576W3A

+250v POWER SUPPLY

MEC MODEL 1576-4A

1. GENERAL DESCRIPTION

The +250v, 250ma Power Supply has two outputs, +250v and 12.6vac, center tapped, which is capable of furnishing 7 amperes to external filament circuits. The primary windings of transformers T401 and T402 are tapped to compensate for high or low line voltage. If the line voltage is predominantly high, (125v or greater) the taps should be moved from terminal 3 to terminal 4. If the line voltage is low, (105v or less) the taps should be moved from terminal 3 to terminal 2. An amber indicator, DS402, labeled FILAMENT and a red indicator, DS401, labeled PLATE indicate that transformers T402 and T401 have been energized. Input and output fuses and a +250v adjust potentiometer R423 are provided. The output of transformer T401 is full-wave rectified by silicon diodes CR401 through CR408, filtered by inductor L401, capacitors C401-C403 and applied to the plates of series regulator tubes V401-V403, which furnish a regulated output of +250v. Resistors R401 and R402 insure equal division of voltage between capacitors C402 and C403.

2. DETAILED DESCRIPTION

The -250v generated by the -250v regulator section of the -250v Power Supply is applied to a resistor divider consisting of resistors R422, R423 and R424. This resistor string compares the +250v output to the -250v output. The error voltage appearing on the wiper of potentiometer R423 is amplified by tube V405 and directly coupled to amplifier tube V404 which in turn drives the grids of the three series regulator tubes V401-V403. If the +250v output increases, becoming more positive, the pin 6 plate of V405 becomes more negative, and the pin 1 plate of V405 becomes more positive, causing the plates, pin 1 and 6 of V404 to become more negative. This causes the grids of three regulator tubes to become more negative, and since these regulators act essentially as cathode followers, their cathodes also become more

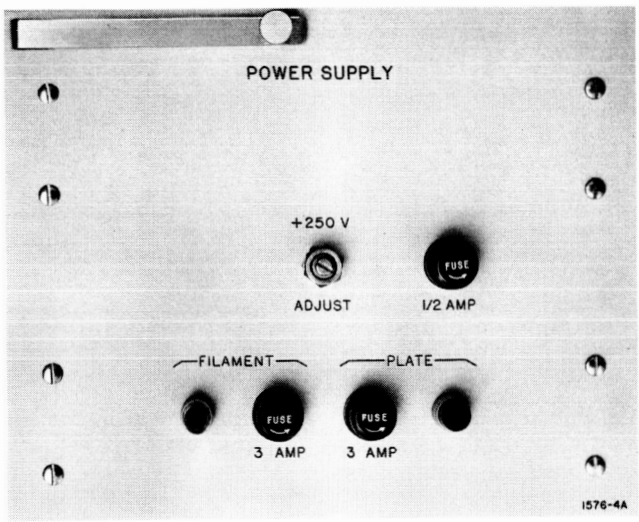

+250v Power Supply

negative, thereby reducing the output voltage. Similarly, if the output voltage were to go negative, the grids of the three regulator tubes would go positive tending to cause the output voltage to remain constant. Should a change occur in the -250v power supply voltage, the +250v supply will change proportionally due to the resistor divider R422, R423 and R424, thus keeping the supply voltages to the DC amplifiers balanced.

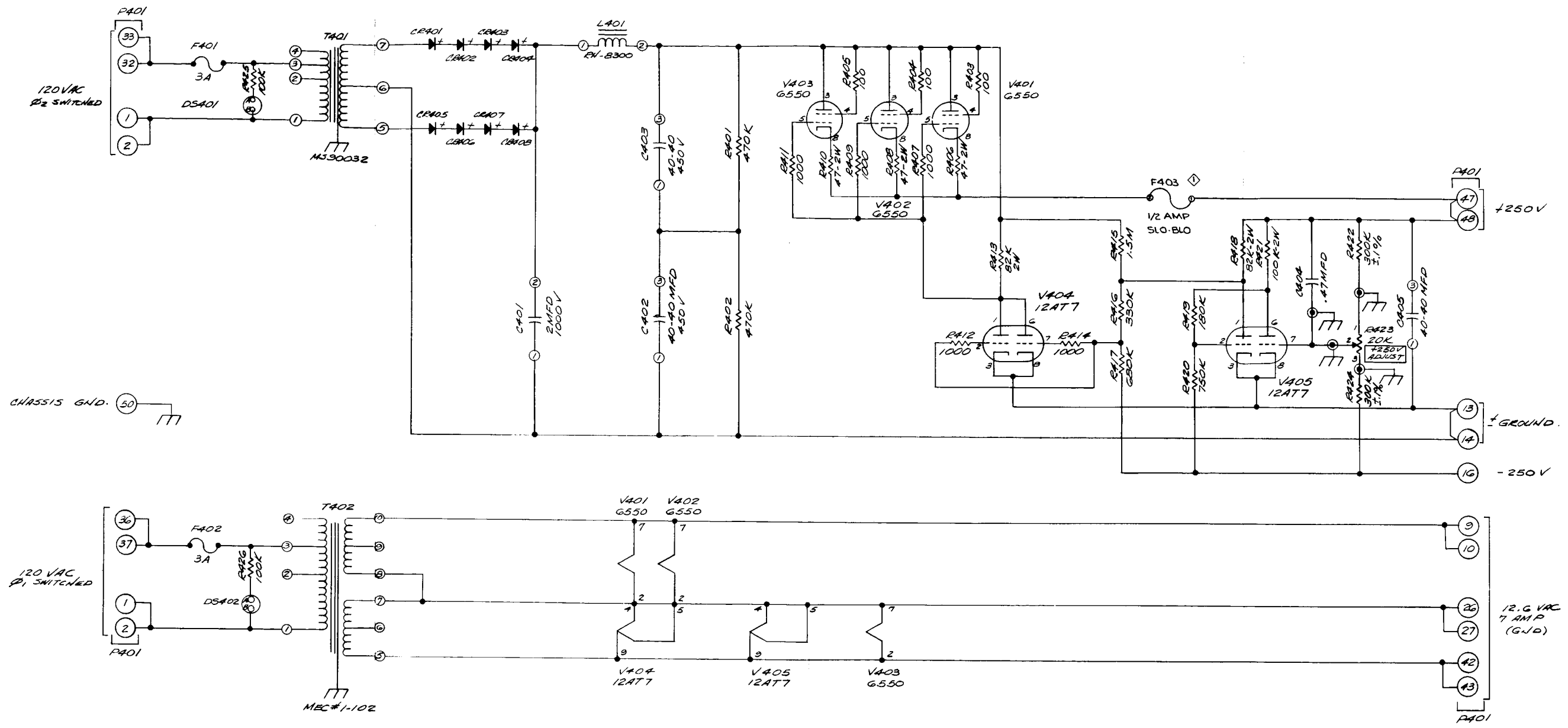

NOTES:
1. ALL RESISTORS ARE TO BE 1/2 WATT ±10%
UNLESS OTHERWISE SPECIFIED.
2. CR401-CR408 ARE TO BE 1N1695.

Schematic
1576-4A Power Supply
Dwg. #D1576S4A

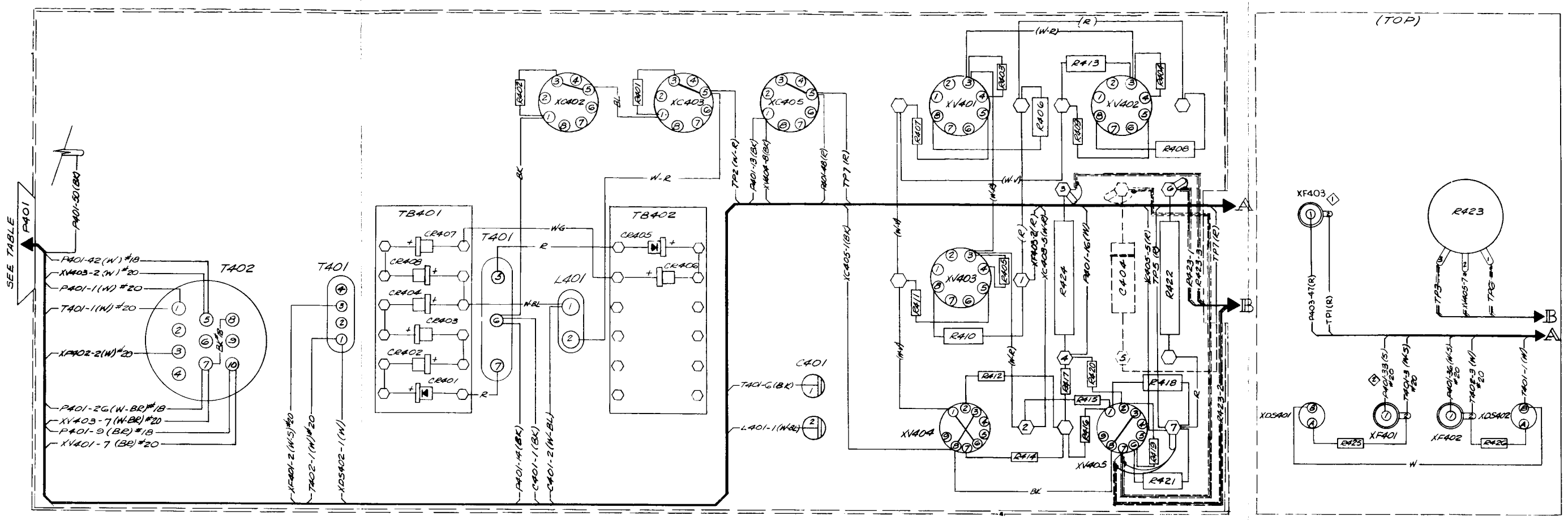

P401					
TERM	DESTINATION	FUNCTION	TERM	DESTINATION	FUNCTION
1	T402-1 (W) #20	120 VAC	26	T402-7 (W-BR) #18	12.6 VAC (CT)
2			27		
3			28		
4			29		
5			30		
6			31		
7			32		
8			33	XF401-1 (S) #20	120 VAC INPUT
9	T402-10 (BR) #18	12.6 VAC	34		
10			35		
11			36	XF402-1 (W-S) #20	120 VAC INPUT
12			37		
13	XC405-1 (BR)	±GROUND	38		
14	T401-6 (BR)	±GROUND	39		
15			40		
16	TP4 (W)	-250V	41		
17			42	T402-5 (W) #18	12.6 VAC
18			43		
19			44		
20			45		
21			46		
22			47	XF403-1 (R)	+250 VAC
23			48	XC405-5 (R)	+250 VAC
24			49		
25			50	GROUND LUG (BR)	CHASSIS GND

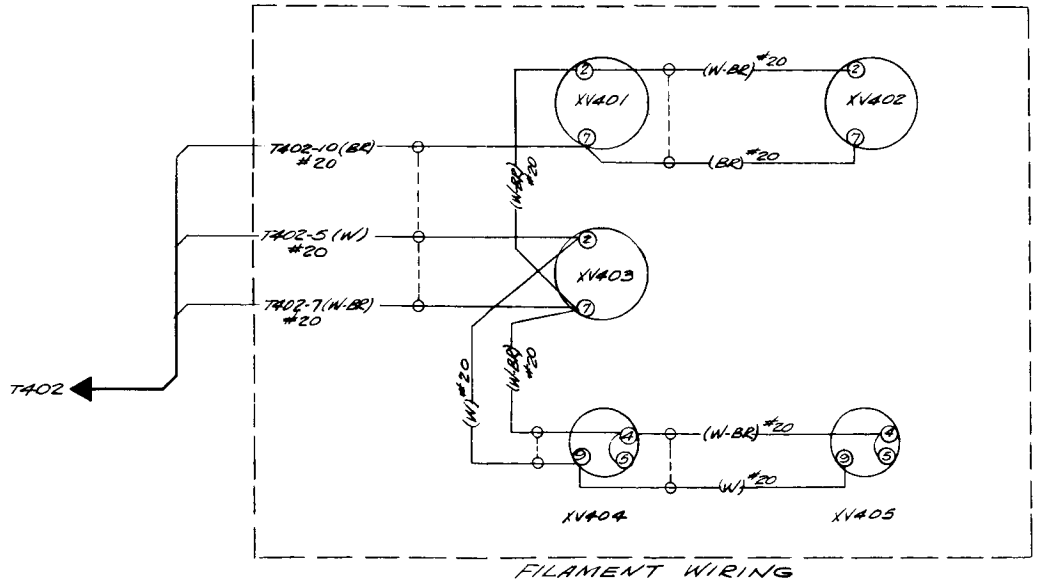

FILAMENT WIRING

NOTES:
1. ALL WIRE TO BE #22 GA. UNLESS OTHERWISE SPECIFIED
2. ~~~~ INDICATES RG174/U COAX.
3. (1) INDICATES TIE POINT
4. o---o INDICATES TWISTED LEADS.

Wiring Diagram
1576-4A Power Supply
Dwg. #D1576W4A

TN46 DUAL EMITTER FOLLOWER

A TN46 consists of two PNP transistors connected as independent emitter followers. As normally used, a supply voltage is connected to pins 1 and 4 with plus side on pin 4. As the input signal voltage at pin 2 is varied between the voltages of pins 4 and 1, the transistor will conduct and the voltage at the emitter, pin 3, will vary with that of the input voltage, being approximately 0.2v more positive than the voltage at pin 2. Since a transistor has power gain, a lower impedance load can be driven from pin 3 than could have from the input signal that is applied to pin 2. The second section is identical to the first section described.

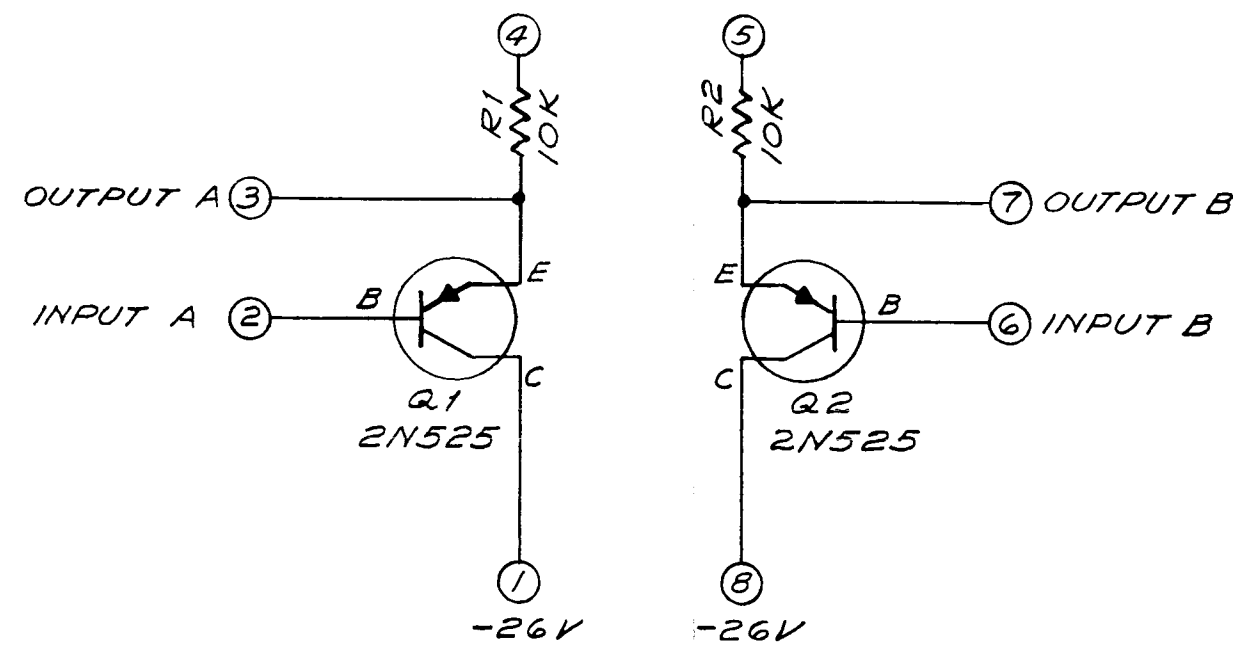

Schematic
TN46 Dual Emitter Follower
Dwg. #A103S46A

TN57 DUAL PULSE AMPLIFIER

TN57 contains two PNP transistors connected as two independent conventional amplifiers. Only one of these will be discussed since the other is identical to it. As normally used, a supply voltage is connected to pins 3 and 1 with the plus side on pin 3. Pin 2 will be the input and pin 4 the output. As long as pin 2 is more positive than pin 3 the transistor is cut off and the voltage at pin 4 will be the same as the voltage at pin 1. When pin 2 is approximately .5v negative with respect to pin 3 the transistor will saturate and the voltage at pin 4 will go positive until it saturates, approximately .25v more negative than the emitter. Caution must be used to connect an external base resistor in series with pin 3 to prevent damage to the transistor. The value of the external base resistor is dependent upon how negative the driving voltage goes and upon the external load that is connected to pin 4. To insure saturation the base current should be at least 1/20th of the collector current.

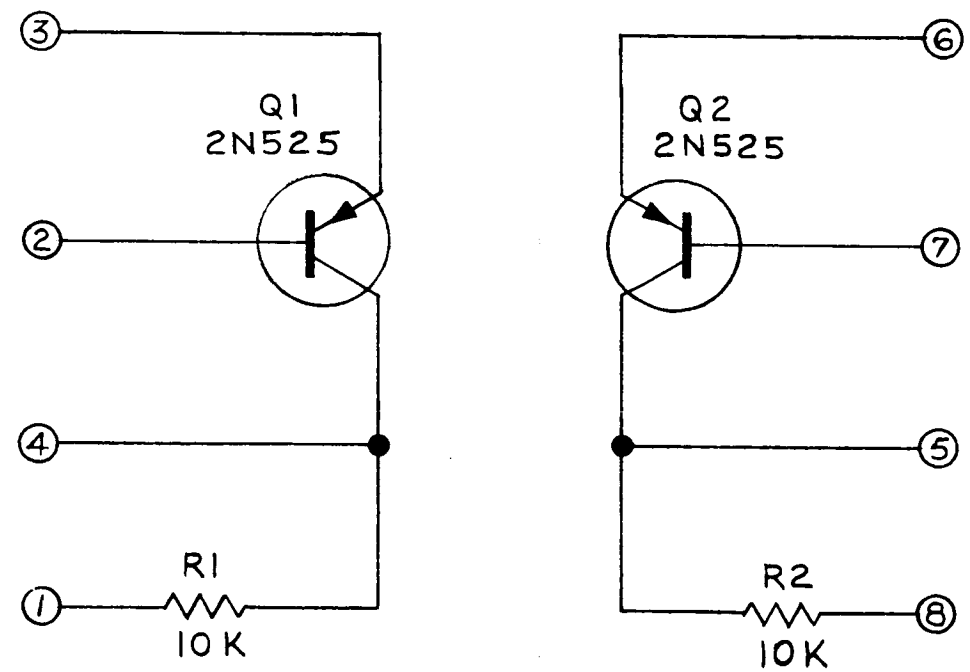

Schematic
TN57 Dual Pulse Amplifier
Dwg. #A103S57A

TN58 DUAL EMITTER FOLLOWER

A TN58 consists of two NPN transistors connected as independent emitter followers. As normally used, a supply voltage is connected to pins 4 and 1 with the plus side on pin 4. As the voltage at pin 2 is varied, between the voltages at pins 4 and 1, the transistor will conduct and the voltage at the emitter, pin 3, will be approximately .4v more negative than the voltage at pin 2. Because of the power gain of the transistor a lower impedance load can be driven from pin 3 than could have been driven from the signal applied to pin 2.

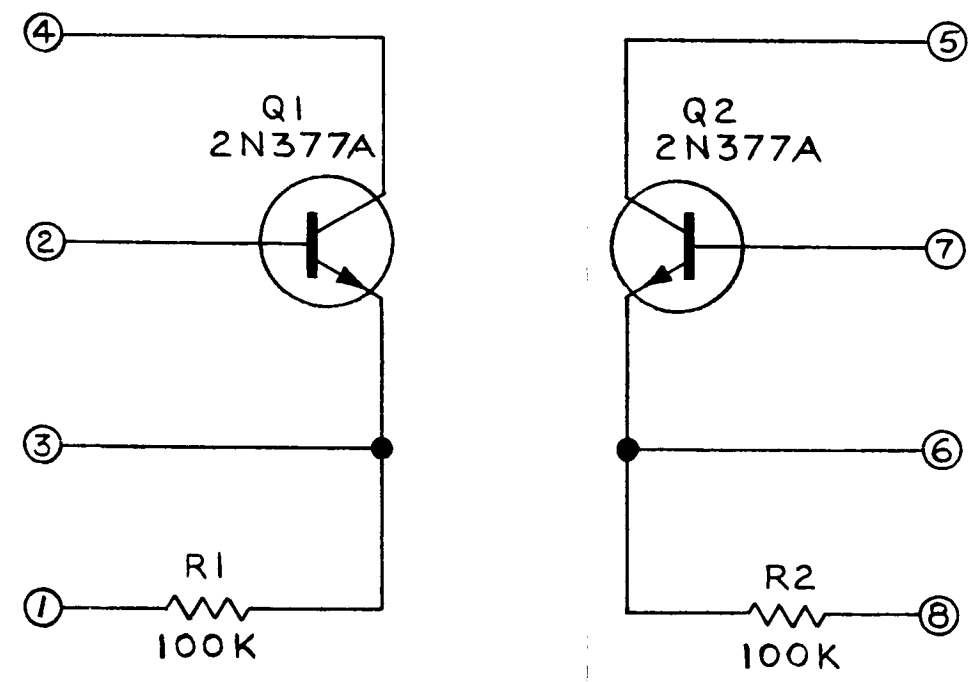

Schematic
TN58 Dual Emitter Follower
Dwg. #A103S58A

TN134 GATED OSCILLATOR AND SQUARING CIRCUIT

The TN134 is a gated oscillator (80 cycles to 5 kilocycles per second), which can be turned on or off by an external switching circuit. The oscillator section (Q2) is followed by two emitter-followers (Q3 and Q4) and one squaring amplifier (Q5), which amplify and clip the signal so the output is a square wave. The oscillator tank circuit consists of an external inductor, connected between pins 2 and 5, and external capacitors C1 and C2. The oscillator is turned on by clamping pin 3 to the minus supply voltage, and is turned off by clamping pin 3 between -1v and 0v.

When the voltage at pin 3 equals the minus supply voltage, the input transistor Q1, will be at cutoff and will have little or no effect on the oscillator transistor Q2. The base of Q2 is returned to a minus voltage, cutting off Q2 and sending the tank circuit into oscillation. The first half cycle of the tank circuit applies a positive voltage to the junction of C1 and C2, keeping Q2 cut off. C1 and C2 will be partially charged during this positive going portion of the cycle by current through R6. As the oscillation in the tank circuit reverses, the junction of C1 and C2 tends to become negative, driving Q1 toward saturation, and pulling the tank circuit negative through pin 5. When Q2 saturates the junction of C1 and C2 is no longer driven negative and Q2 cuts off, starting the cycle over again.

The phasing of the drive into Q1 is such that the tank circuit is pulsed at the proper portion of its cycle to maintain oscillation. The voltage across the tank circuit, pin 5, is coupled to the base of emitter-follower Q3. Q3 drives another emitter-follower Q4. Q4, in turn, drives amplifier Q5 from cut-off to saturation. The resultant waveform at the collector of Q5 is a square wave which goes from the minus supply voltage to approximately 0v at the same frequency as the oscillator. When the oscillator is switched off again by the pin 3 voltage approaching 0v, Q5 will saturate and the output will remain at 0v. The supply voltages may be -25 and +15v, -20v and +12v, or -15 and +10v.

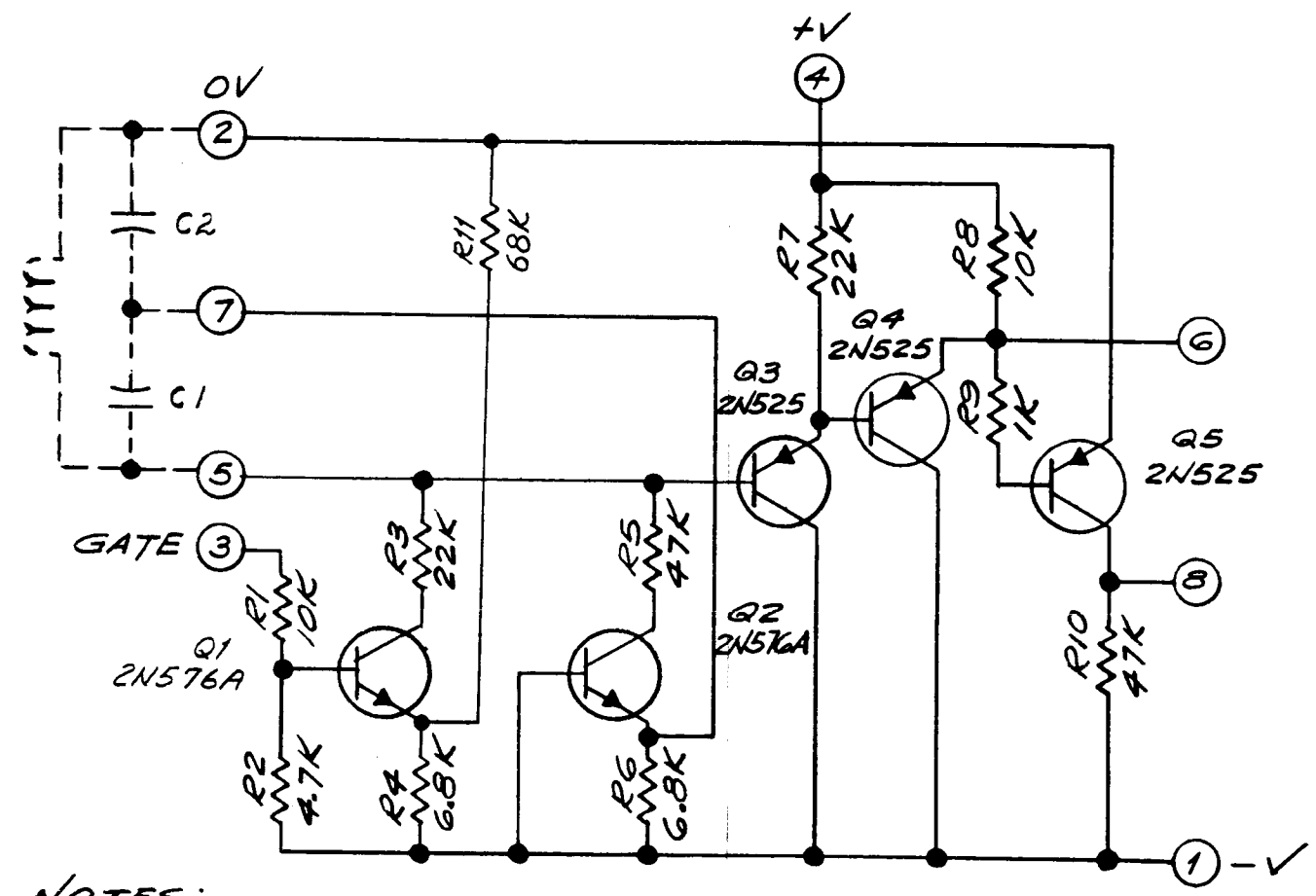

NOTES:
VOLTAGES +V +10 +12 +15
-V -15 -20 -25
C1:C2 = 1:10
ALL RESISTORS ARE 1/2 WATT UNLESS OTHERWISE SPECIFIED.

Schematic

TN134 Gated Oscillator and Squaring Circuit

Dwg. #A103S134A