NEG.

MS-102 VOL. 1

project
mercury

OPERATION AND MAINTENANCE

CAPSULE COMMUNICATIONS SYSTEM

prepared for

National Aeronautics and Space Administration
Contract No. NAS 1-430

July 31, 1961

THIS PUBLICATION SUPERSEDES MS-102
DATED NOVEMBER 30, 1960 -
REVISED FEBRUARY 1, 1961

The Bendix Corporation
Bendix Radio Division

in association with

WESTERN ELECTRIC COMPANY, INC.

LIST OF EFFECTIVE PAGES

TOTAL NUMBER OF PAGES IS 372 AS FOLLOWS:

Item	*Page No.*	*Issue*	*Item*	*Page No.*	*Issue*
Title Page		Original			
A-Page		Original			
Front	i thru xxiv	Original			
Sect. I	1-1 thru 1-134	Original			
Sect. II	2-1 thru 2-54	Original			
Sect. III	3-1 thru 3-56	Original			
Sect. IV	4-1 thru 4-102	Original			

* The asterisk indicates pages revised, added or deleted by the current change.

CASE FILE COPY

TABLE OF CONTENTS

(Volume I)

SECTION I--GENERAL DESCRIPTION

Paragraph		Page
1-1.	General Information	1-1
	A. Scope of Manual	1-1
	B. Project Mercury Scope	1-1
	C. Site Functions	1-2
	D. Capsule Communication System Function	1-3
1-2.	Equipment Supplied	1-3
	A. Equipment and System Power Consumption	1-8
	B. Technical Characteristics of Equipments	1-14
	C. Symbol Number Series	1-24
1-3.	Capsule Communication System (Typical Site)	1-25
	A. General	1-25
	B. Physical Description	1-29
	(1). Antenna Equipment	1-29
	(2). Voice Receiver Rack	1-38
	(3). Transmitter Van	1-44
	(4). UHF Transmitter Rack	1-46
	(5). HF Voice Transmitter	1-53
	(6). HF Monitor Rack	1-53
	(7). Terminal Equipment Rack	1-56
	(8). Recovery Team Equipment (Grand Canary Island Only)	1-56
	(9). Communication Technician's Console	1-59
	C. Functional Description	1-65
	(1). General	1-65
	(2). UHF Voice Receiving System	1-65
	(3). HF Voice Receiving System	1-68
	(4). Receiver Audio Monitoring	1-69
	(5). UHF Transmitting System	1-69
	(6). HF Voice Transmitting System	1-72
	(7). Down-Range Control at Cape Canaveral	1-75
	D. Operating Controls	1-75

TABLE OF CONTENTS (Continued)

Paragraph		Page
	SECTION I--GENERAL DESCRIPTION (Continued)	
1-4.	Site Implementation	1-99
	A. General	1-99
	B. Cape Canaveral, Florida	1-100
	C. Grand Bahama Island	1-106
	D. Grand Turk Island	1-110
	E. Bermuda	1-113
	F. Atlantic Ship and Indian Ocean Ship	1-116
	G. Grand Canary Island	1-119
	H. Kano, Nigeria	1-122
	I. Zanzibar	1-122
	J. Muchea, Australia	1-125
	K. Woomera, Australia	1-125
	L. Canton Island	1-125
	M. Kauai Island, Hawaii	1-129
	N. Guaymas, Mexico	1-129
	O. Point Arguello, California	1-129
	P. Corpus Christi, Texas	1-134
	SECTION II--INSTALLATION	
2-1.	General	2-1
2-2.	Trailer Van Installation and Towing	2-1
	A. General	2-1
	B. Typical Trailer Van Siting	2-1
	C. Dismounting Van from Trailer Undercarriage	2-2
	D. Towing Trailer Van	2-3
2-3.	Equipment Installation	2-5
2-4.	Inter-Equipment Cabling	2-8
	A. General	2-8
	B. Cable Wiring	2-8
	C. Noise and Crosstalk on Audio Transmission Lines	2-9

TABLE OF CONTENTS (Continued)

Paragraph		Page
	SECTION II--INSTALLATION (Continued)	
	D. SWR and Power Meter (Electrical Installation)	2-10
2-5.	Pre-Operational Checks	2-11
	SECTION III--SYSTEM OPERATION	
3-1.	General	3-1
3-2.	Initial Turn-on Procedures	3-1
	A. Voice Receiver Rack	3-1
	B. UHF Transmitter Rack	3-8
	C. HF Voice Transmitter	3-14
	D. Communication Technician's Console	3-16
	E. HF Monitor Rack	3-19
	F. Servo Amplifier Rack	3-19
	G. Recovery Team Communication Equipment	3-23
3-3.	Normal Turn-on Procedure	3-26
3-4.	System Operational Checks	3-26
	A. UHF Receiving System	3-26
	B. HF Receiving System	3-30
	C. UHF Transmitter System	3-34
	D. HF Transmitter System	3-36
	E. Over-all HF and UHF Transmitter System	3-36
	F. Tape Recorder Control	3-38
	G. Emergency Voice Transmitting System	3-38
	H. Control of Down-Range Sites	3-38
3-5.	Normal Operating Procedures	3-42
	A. Receiving System	3-42
	B. Transmitting System	3-43
	C. Recovery Team Communication Equipment	3-44
3-6.	Emergency Operation Procedures	3-45
	A. Voice Receiving System	3-45
	B. Voice Transmitting System	3-48

TABLE OF CONTENTS (Continued)

Paragraph		Page
	SECTION IV--THEORY OF OPERATION	
4-1.	General	4-1
	A. Degree of Coverage	4-1
	B. System Breakdown	4-1
4-2.	Communication Technician's Console	4-1
	A. General	4-1
	B. HF/UHF Voice Receiving System Selection Circuit	4-13
	C. UHF Voice Receiver Remote Selection Circuit	4-13
	D. HF Voice Receiver Remote Selection Circuit	4-15
	E. Voice Receiver Muting	4-17
	F. Signal Generator Remote Controls	4-18
	G. Voice Transmitter Selection Circuits	4-22
	H. UHF Voice Transmitter, Master/Standby Selection Circuit	4-23
	I. HF Voice Transmitter, Master/Standby Selection Circuit	4-25
	J. Signal Presence Indicator	4-25
	K. 28 VDC Power Supply	4-27
	L. 65 VDC Power Supply	4-32
4-3.	System Operation of UHF Voice Receiving System	4-33
	A. General	4-33
	B. Signal Flow at Typical Sites	4-34
	C. Signal Flow at Cape Canaveral	4-39
	D. Signal Flow at Bermuda	4-43
	E. Signal Flow at Grand Bahama and Grand Turk Island	4-47
4-4.	System Operation of HF Voice Receiving System	4-51
	A. General	4-51
	B. Signal Flow at Typical Site	4-52
	C. Signal Flow at Cape Canaveral	4-55
	D. Signal Flow at Bermuda	4-59
	E. Signal Flow at Grand Bahama and Grand Turk Islands	4-60
4-5.	System Operation of UHF Voice Transmitter Remote Control Circuits	4-64

TABLE OF CONTENTS (Continued)

Paragraph		Page
	SECTION IV--THEORY OF OPERATION (Continued)	
	A. General	4-64
	B. Operation	4-64
	C. MCW Keying of A/G Circuit	4-73
4-6.	System Operation of HF Voice Transmitter Remote Control Circuits	4-68
	A. General	4-68
	B. Operation	4-71
4-7.	Recovery Team Communication Equipment	4-77
	A. General	4-77
	B. Functional Operation	4-77
	C. Receiving System Signal Flow	4-78
	D. Audio Amplifier and Loudspeaker Panel	4-79
	E. Audio Keying Oscillator	4-81
	F. Remote AM Operation of Recovery Team Transmitter	4-82
	G. Remote MCW Operation of Recovery Team Transmitter	4-84
	H. Remote CW Operation of Recovery Team Transmitter	4-85
	I. Sidetone Circuit	4-87
	J. Antenna Circuitry	4-88
	K. HF Balun and Matching Line	4-91
	L. Primary Power Distribution	4-92
4-8.	Control of Down-Range Sites	4-92
	A. General	4-92
	B. Functional Operation	4-93
	C. Detailed Operation of Transmitter and Receiver Control	4-97
	(Volume II)	
	SECTION V--MAINTENANCE	
5-1.	General Information	5-1
5-2.	Test Equipment	5-1
5-3.	Special Tools	5-6
5-4.	Lubrication	5-7

TABLE OF CONTENTS (Continued)

Paragraph		Page
	SECTION V--MAINTENANCE (Continued)	
5-5.	Preventive Maintenance	5-8
5-6.	Minimum Performance Standards	5-9
	A. General Information	5-9
	B. System Minimum Performance Standards	5-10
	C. Communication Technician's Console, Minimum Performance Standards (Cape Canaveral)	5-39
	D. Communication Technician's Console, Minimum Performance Standards (Grand Bahama Island and Grand Turk Island)	5-51
	E. Communication Technician's Console, Minimum Performance Standards (Bermuda)	5-64
	F. Communication Technician's Console, Minimum Performance Standards (All Other Sites)	5-76
	G. Voice Receiver Rack Composite, Minimum Performance Standards	5-102
	H. UHF Voice Receiver Rack, Minimum Performance Standards	5-121
	I. HF Monitor Rack, Minimum Performance Standards	5-121
	J. Voice Receiver Rack, Minimum Performance Standards	5-122
	K. Recovery Team Equipment, Minimum Performance Standards	5-125
	L. Transmitter Van, Minimum Performance Standards	5-126
5-7.	System Trouble Analysis	5-130
	A. Functional Troubleshooting	5-131
	B. Detailed Troubleshooting	5-131
	C. Down-Range Control Troubleshooting	5-131
	D. Voice Antenna Admittance and VSWR Tests	5-233
5-8.	Minor Repairs	5-242
	A. General	5-242
	B. Relays	5-242
	C. Switch and Indicator Assemblies	5-242
	D. 28 VDC Power Supply	5-243
	E. Trailer Van	5-246
	F. Antenna Tuner	5-247

TABLE OF CONTENTS (Continued)

Paragraph		Page
	SECTION V--MAINTENANCE (Continued)	
5-9.	Audio and 65-Volt Remote Indicator Adjustments (Cape Canaveral and Grand Bahama Island)	5-249
	A. General Information	5-249
	B. Procedure	5-250
5-10.	Audio Adjustments (All Other Sites)	5-255
	A. General Information	5-255
	B. Procedure	5-255
5-11.	Audio and 65-Volt Remote Indicator Adjustments (Bermuda)	5-257
	A. General Information	5-257
	B. Procedure	5-257
5-12.	Audio and 65-Volt Remote Indicator Adjustments (Pt. Arguello)	5-262
	A. General Information	5-262
	B. Procedure	5-263
5-13.	Dual Power Supply Adjustment	5-269
	A. General	5-269
	B. Procedure	5-271
5-14.	Recovery Team Equipment Adjustments	5-272
	A. Audio Circuits	5-272
	B. Sidetone	5-273
5-15.	Trailer Van Adjustments	5-275
	SECTION VI--PARTS LIST	
6-1.	General	6-1
	(Volume III)	
	SECTION VII--DIAGRAMS	
7-1.	General	7-1

LIST OF ILLUSTRATIONS

Figure No.	Title	Page
	(Volume I) SECTION I	
1-1	Project Mercury Site Locations	xxiv
1-2	Operating Modes, Capsule Communication System	1-26
1-3	Site Antenna Complements	1-27
1-4	Cape Canaveral Antenna Complement	1-30
1-5	Voice Receiving Antenna No. 1	1-31
1-6	Voice Receiving Antenna No. 2 and Voice Transmitting Antenna	1-33
1-7	Voice and Command Transmitting Antenna	1-34
1-8	Voice Receiving and Transmitting Antenna, Ships	1-35
1-9	Voice Receiving Antenna, Ships	1-36
1-10	Triplexer	1-37
1-11	Preamplifier	1-37
1-12	Servo Rack	1-39
1-13	Voice Receiver Rack,Typical	1-41
1-14	Voice Receiver Rack, Cape Canaveral, Receiver Building No. 2	1-43
1-15	Voice Receiver Rack, Grand Bahama and Grand Turk Islands	1-45
1-16	Transmitter Van, Typical Site	1-47
1-17	Transmitter Van, Kauai Island, Hawaii	1-48
1-18	Transmitter Van, Muchea and Guaymas	1-49
1-19	Transmitter Van, Cape Canaveral	1-50
1-20	Transmitter Van, Grand Canary Island	1-51
1-21	UHF Transmitter Rack	1-52
1-22	HF Transmitter Cabinet	1-54
1-23	HF Monitor Rack	1-55
1-24	Terminal Equipment Rack, Kauai, Hawaii	1-57
1-25	Recovery Team Console	1-58
1-26	Communication Technician's Console, Double Rack	1-61
1-27	Communication Technician's Console, Triple Rack	1-63
1-28	Cape Canaveral, Site Locations and Mercury Control Center Equipment Placement	1-105
1-29	Grand Bahama Island, Site Location and Transmitter Room Equipment Placement	1-107

LIST OF ILLUSTRATIONS (Continued)

Figure No.	Title	Page
1-30	Grand Bahama Island, Telemetry Room Equipment Placement	1-109
1-31	Grand Turk Island, Transmitter Room Equipment Placement	1-111
1-32	Grand Turk Island, Telemetry Room Equipment Placement	1-112
1-33	Bermuda, Receiver Building Equipment Placement	1-114
1-34	Bermuda, Transmitter Room Equipment Placement	1-115
1-35	Atlantic and Indian Ocean Ships, Equipment Area Locations	1-117
1-36	Atlantic and Indian Ocean Ships, Transmitter Area Equipment Placement	1-117
1-37	Atlantic and Indian Ocean Ships, Telemetry Room Equipment Placement	1-118
1-38	Grand Canary Island, Site Locations	1-120
1-39	Typical Site Telemetry and Control Building, Equipment Placement	1-121
1-40	Kano, Nigeria, Site Locations	1-123
1-41	Zanzibar, Site Locations	1-124
1-42	Muchea, Australia, Site Locations	1-126
1-43	Woomera, Australia, Site Locations	1-127
1-44	Canton Island, Site Locations	1-128
1-45	Kauai Island, Hawaii, Site Locations	1-130
1-46	Guaymas, Mexico, Site Locations	1-131
1-47	Pt. Arguello, California, Site Location	1-132
1-48	Pt. Arguello, California, Equipment Placement	1-133
1-49	Corpus Christi, Texas, Site Location	1-134

SECTION II

2-1	Trailer Van, Lifting Jack Placement	2-2
2-2	Trailer Van, Towing Details	2-4
2-3	Cabinet Mounting Details	2-5
2-4	Amplidyne Mounting Details	2-6
2-5	Synchro Remoting System Transmitter-Receiver Mounting Hole Locations	2-7
2-6	Inter-Equipment Cabling Diagram, Cape Canaveral	2-13
2-7	Inter-Equipment Cabling Diagram, Grand Bahama Island	2-15
2-8	Inter-Equipment Cabling Diagram, Grand Turk Island	2-17

LIST OF ILLUSTRATIONS (Continued)

Figure No.	Title	Page
2-9	Inter-Equipment Cabling Diagram, Bermuda	2-19
2-10	Inter-Equipment Cabling Diagram, Atlantic Ship	2-21
2-11	Inter-Equipment Cabling Diagram, Grand Canary Island	2-23
2-12	Inter-Equipment Cabling Diagram, Kano, Nigeria	2-25
2-13	Inter-Equipment Cabling Diagram, Zanzibar	2-27
2-14	Inter-Equipment Cabling Diagram, Indian Ocean Ship	2-29
2-15	Inter-Equipment Cabling Diagram, Muchea, Australia	2-31
2-16	Inter-Equipment Cabling Diagram, Canton Island	2-33
2-17	Inter-Equipment Cabling Diagram, Kauai Island	2-35
2-18	Inter-Equipment Cabling Diagram, Point Arguello, California	2-37
2-19	Inter-Equipment Cabling Diagram, Guaymas, Mexico	2-39
2-20	Inter-Equipment Cabling Diagram, Corpus Christi, Texas	2-41
2-21	Transmitter Van Cabling Diagram, Cape Canaveral	2-43
2-22	Transmitter Van Cabling Diagram, Grand Canary Island	2-45
2-23	Transmitter Van Cabling Diagram, Muchea, Guaymas	2-47
2-24	Transmitter Van Cabling Diagram, Kauai Island	2-49
2-25	Transmitter Van Cabling Diagram, Kano, Zanzibar, Woomera, Canton, Corpus Christi	2-51
2-26	Down-Range Control System, Cabling Diagram	2-53
	SECTION III	
3-1	HF/UHF Signal Generator	3-2
3-2	Preamplifier Power Control Panel	3-4
3-3	UHF Voice Receiver	3-4
3-4	HF Voice Receiver	3-5
3-5	Dual Speaker Panel	3-5
3-6	Dual Diversity Combiner	3-7
3-7	Dual Track Tape Recorder	3-8
3-8	UHF Voice Transmitter	3-9
3-9	UHF Cavity Filter	3-13
3-10	Power Modulation Monitor	3-13
3-11	HF Voice Transmitter Operating Controls	3-15
3-12	Antenna Switching Panel, Voice Receiver Rack	3-17

LIST OF ILLUSTRATIONS (Continued)

Figure No.	Title	Page
3-13	Communication Technician's Console, Rear Panel Power Controls	3-17
3-14	HF Voice Transmitter Microphone Amplifier	3-18
3-15	Audio Line Amplifier	3-18
3-16	Servo Amplifier	3-20
3-17	Control Indicator	3-21
3-18	Transmitter-Receiver System Selector Panel	3-31
3-19	Line Monitor Jack Panel	3-31
3-20	Down-Range Control Panel (Cape Canaveral)	3-32
3-21	Range Control Status Panel (GBI & GTI)	3-32
3-22	UHF/HF Receiver Control Panel	3-33
3-23	UHF/HF Transmitter Control Panel	3-33
3-24	Auxiliary Control Panel	3-35
3-25	Volume Level Indicator Control Panel	3-35
3-26	Line Level Control Panel	3-35
3-27	Site Intercommunications Panel	3-37
3-28	Special Intercommunications Panel	3-37
3-29	Retrofire Change Display Unit	3-39
3-30	Command Display Panel	3-40
3-31	Command Actuation Panel	3-40
3-32	Audio Code Oscillator	3-46
3-33	Audio Keying Oscillator (P/O Recovery Team Console)	3-46
3-34	Patch and Control Panel (P/O Recovery Team Console)	3-46
3-35	Audio Amplifier and Loudspeaker	3-49
3-36	SWR and Power Meter	3-49
3-37	Antenna Tuner	3-50
3-38	Components Under Voice Antenna No. 2 Platform	3-52
3-39	Voice Antenna No. 2 Coaxial Switches	3-52
3-40	Components Under Voice Antenna Platform, Ships	3-53
3-41	HF Voice Transmitter Band Pass Filter	3-54
3-42	HF Voice Receiver Band Pass Filter	3-55
3-43	Control Relay Current Adjustment Panel	3-56

LIST OF ILLUSTRATIONS (Continued)

Figure No.	Title	Page
	SECTION IV	
4-1	Voice Receiving System, Block Diagram	4-3
4-2	Voice Transmitting System, Block Diagram	4-4
4-3	Communication Technician's Console, Block Diagram	4-5
4-4	Relay-Switch Assembly, Exploded View	4-12
4-5	HF/UHF Voice Receiving System Selector Circuit	4-14
4-6	UHF Voice Receiver Remote Selection Circuit	4-14
4-7	HF Voice Receiver Remote Selection Circuit	4-16
4-8	Voice Receiver Muting Circuit	4-19
4-9	HF/UHF Signal Generator Remote Control Circuit	4-21
4-10	HF/UHF Voice Transmitter System Selector Circuit	4-23
4-11	UHF Voice Transmitter Remote Selection Circuit	4-24
4-12	HF Voice Transmitter Remote Selection Circuit	4-26
4-13	Dual Power Supply Control Circuit, Simplified Schematic	4-29
4-14	Signal Flow of UHF Voice Receiving System (Typical Site), Simplified Schematic	4-35
4-15	Signal Flow of UHF Voice Receiving System (Cape Canaveral), Simplified Schematic	4-41
4-16	Signal Flow of UHF Voice Receiving System (Bermuda), Simplified Schematic	4-45
4-17	Signal Flow of UHF Voice Receiving System (GBI, GTI), Simplified Schematic	4-49
4-18	Signal Flow of HF Voice Receiving System (Typical Site), Simplified Schematic	4-53
4-19	Signal Flow of HF Voice Receiving System (Cape Canaveral), Simplified Schematic	4-57
4-20	Signal Flow of HF Voice Receiving System (Bermuda), Simplified Schematic	4-61
4-21	Signal Flow of HF Voice Receiving System (GBI, GTI), Simplified Schematic	4-62
4-22	UHF Transmitter Remote Control (Command Sites), Simplified Schematic	4-65
4-23	UHF Transmitter Remote Control (Non-Command Sites), Simplified Schematic	4-66
4-24	HF Transmitter Remote Control (Command Sites), Simplified Schematic	4-69

LIST OF ILLUSTRATIONS (Continued)

Figure No.	Title	Page
4-25	HF Transmitter Remote Control (Non-Command Sites), Simplified Schematic	4-70
4-26	Functional Operation of MCW Keying of A/G Circuit	4-74
4-27	Recovery Team Communications Equipment, Block Diagram	4-75
4-28	Recovery Team Equipment Receiving System Signal Flow, Simplified Schematic	4-79
4-29	Remote AM Control Circuit of Recovery Team Transmitter, Simplified Schematic	4-83
4-30	Remote MCW Control Circuit of Recovery Team Transmitter, Simplified Schematic	4-84
4-31	Remote CW Control Circuit of Recovery Team Transmitter, Simplified Schematic	4-86
4-32	Recovery Team Equipment Sidetone Circuit, Simplified Schematic	4-87
4-33	Antenna Tuner in 2-10 MC Position, Functional Schematic	4-89
4-34	Antenna Tuner in 10-20 MC Position, Functional Schematic	4-89
4-35	HF Balun Detail	4-91
4-36	Down-Range Control, Block Diagram	4-95
4-37	Remote Control of Down-Range Transmitters, Simplified Schematic	4-99
4-38	Remote Control of Down-Range Receivers, Simplified Schematic	4-100
	(Volume II)	
	SECTION V	
5-1	HF Voice Receiver Sensitivity Test Setup	5-11
5-2	HF Voice Receiver Audio Level Test Setup	5-12
5-3	UHF Voice Receiver Sensitivity and Audio Level Test Setup	5-16
5-4	HF Voice Transmitter Frequency Stability Test Setup.	5-23
5-5	UHF Voice Transmitter Frequency Stability Test Setup	5-25
5-6	HF Voice Receiver Sensitivity Test Setup (Voice Receiver Rack Composite)	5-104
5-7	HF Voice Receiver Diversity Test Setup.	5-105
5-8	HF Antenna Switching Panel Test Setup	5-108
5-9	UHF Antenna Switching Panel Test Setup	5-109
5-10	UHF Diversity Combiner Test Setup	5-109
5-11	Functional Troubleshooting HF Voice Receiving System, Block Diagram	5-133

LIST OF ILLUSTRATIONS (Continued)

Figure No.	Title	Page
5-12	Functional Troubleshooting HF Voice Transmitting System, Block Diagram	5-135
5-13	Functional Troubleshooting UHF Voice Receiving System, Block Diagram	5-137
5-14	Functional Troubleshooting UHF Voice Transmitting System, Block Diagram	5-139
5-15	Functional Troubleshooting Down-Range Control System, Block Diagram, Sheet 1 of 2	5-141
5-15	Functional Troubleshooting Down-Range Control System, Block Diagram, Sheet 2 of 2	5-143
5-16	Audio Circuit Adjustment Test Setup, Block Diagram	5-145
5-17	Admittance and VSWR Test Setup	5-235
5-18	Plot of Admittance and VSWR	5-238
5-19	Limits of Admittance/Max. VSWR	5-239
5-20	Lamp - Filter Tool	5-243
5-21	28 VDC Power Supply Unit and Filter Unit, Parts Location	5-244
5-22	Relay Panel	5-251
5-23	Load Curves for Dual Power Supply	5-270
5-24	Dual Power Supply Terminal Board	5-272
5-25	Trailer Van, Mechanical Brake Cabling Unit	5-274
5-26	Brake Shoe Adjustment Diagram	5-276
5-27	Transmitter Van Undercarriage Assembly Details	5-277
	SECTION VII (Volume III)	
7-1	UHF Transmitter Rack, Schematic Diagram	7-7
7-2	Voice Receiver Rack (Standard Site), Schematic Diagram	7-9
7-3	Voice Receiver Rack (Cape Canaveral - Mercury Control Building), Schematic Diagram	7-11
7-4	Voice Receiver Rack (Cape Canaveral - Receiver Building No. 2), Schematic Diagram	7-13
7-5	Voice Receiver Rack (GBI and GTI), Schematic Diagram	7-15
7-6	Voice Receiver Rack (Bermuda), Schematic Diagram	7-17
7-7	Voice Receiver Rack (Ships), Schematic Diagram	7-19
7-8	Antenna Switching Unit (Standard Site), Schematic Diagram	7-21
7-9	Antenna Switching Unit (GBI, GTI, and Cape Canaveral), Schematic Diagram	7-23
7-10	Dual Speaker Panel, Schematic Diagram	7-25

LIST OF ILLUSTRATIONS (Continued)

Figure No.	Title	Page
7-11	Preamplifier Control Panel, Schematic Diagram	7-27
7-12	Recorder Playback Control Panel, Schematic Diagram	7-27
7-13	HF Monitor Rack, Schematic Diagram	7-29
7-14	Communication Technician's Console (Cape Canaveral), Schematic Diagram, Sheet 1 of 4	7-31
7-14	Communication Technician's Console (Cape Canaveral), Schematic Diagram, Sheet 2 of 4	7-33
7-14	Communication Technician's Console (Cape Canaveral), Schematic Diagram, Sheet 3 of 4	7-35
7-14	Communication Technician's Console (Cape Canaveral), Schematic Diagram, Sheet 4 of 4	7-37
7-15	Communication Technician's Console (Cape Canaveral), Wiring Diagram, Sheet 1 of 5	7-39
7-15	Communication Technician's Console (Cape Canaveral), Wiring Diagram, Sheet 2 of 5	7-41
7-15	Communication Technician's Console (Cape Canaveral), Wiring Diagram, Sheet 3 of 5	7-43
7-15	Communication Technician's Console (Cape Canaveral), Wiring Diagram, Sheet 4 of 5	7-45
7-15	Communication Technician's Console (Cape Canaveral), Wiring Diagram, Sheet 5 of 5	7-47
7-16	Communication Technician's Console (GBI), Schematic Diagram, Sheet 1 of 2	7-49
7-16	Communication Technician's Console (GBI), Schematic Diagram, Sheet 2 of 2	7-51
7-17	Communication Technician's Console (GBI), Wiring Diagram, Sheet 1 of 2	7-53
7-17	Communication Technician's Console (GBI), Wiring Diagram, Sheet 2 of 2	7-55
7-18	Communication Technician's Console (GTI), Schematic Diagram, Sheet 1 of 2	7-57
7-18	Communication Technician's Console (GTI), Schematic Diagram, Sheet 2 of 2	7-59
7-19	Communication Technician's Console (GTI), Wiring Diagram, Sheet 1 of 2	7-61
7-19	Communication Technician's Console (GTI), Wiring Diagram, Sheet 2 of 2	7-63
7-20	Communication Technician's Console (Bermuda), Schematic Diagram, Sheet 1 of 4	7-65

LIST OF ILLUSTRATIONS (Continued)

Figure No.	Title	Page
7-20	Communication Technician's Console (Bermuda), Schematic Diagram, Sheet 2 of 4	7-67
7-20	Communication Technician's Console (Bermuda), Schematic Diagram, Sheet 3 of 4	7-69
7-20	Communication Technician's Console (Bermuda), Schematic Diagram, Sheet 4 of 4	7-71
7-21	Communication Technician's Console (Bermuda), Wiring Diagram, Sheet 1 of 4	7-73
7-21	Communication Technician's Console (Bermuda), Wiring Diagram, Sheet 2 of 4	7-75
7-21	Communication Technician's Console (Bermuda), Wiring Diagram, Sheet 3 of 4	7-77
7-21	Communication Technician's Console (Bermuda), Wiring Diagram, Sheet 4 of 4	7-79
7-22	Communication Technician's Console (Atlantic Ship and Indian Ocean Ship), Schematic Diagram, Sheet 1 of 2	7-81
7-22	Communication Technician's Console (Atlantic Ship and Indian Ocean Ship), Schematic Diagram, Sheet 2 of 2	7-83
7-23	Communication Technician's Console (Ships), Wiring Diagram, Sheet 1 of 2	7-85
7-23	Communication Technician's Console (Ships), Wiring Diagram, Sheet 2 of 2	7-87
7-24	Communication Technician's Console (Grand Canary Island), Schematic Diagram, Sheet 1 of 2	7-89
7-24	Communication Technician's Console (Grand Canary Island), Schematic Diagram, Sheet 2 of 2	7-91
7-25	Communication Technician's Console (Grand Canary Island), Wiring Diagram, Sheet 1 of 2	7-93
7-25	Communication Technician's Console (Grand Canary Island), Wiring Diagram, Sheet 2 of 2	7-95
7-26	Communication Technician's Console (Kano, Zanzibar, Woomera, Canton Island and Corpus Christi), Schematic Diagram, Sheet 1 of 2	7-97
7-26	Communication Technician's Console (Kano, Zanzibar, Woomera, Canton Island and Corpus Christi), Schematic Diagram, Sheet 2 of 2	7-99
7-27	Communication Technician's Console (Kano, Zanzibar, Woomera, Canton Island and Corpus Christi), Wiring Diagram, Sheet 1 of 2	7-101

LIST OF ILLUSTRATIONS (Continued)

Figure No.	Title	Page
7-27	Communication Technician's Console (Kano, Zanzibar, Woomera, Canton Island and Corpus Christi), Wiring Diagram, Sheet 2 of 2	7-103
7-28	Communication Technician's Console (Muchea, Guaymas), Schematic Diagram, Sheet 1 of 4	7-105
7-28	Communication Technician's Console (Muchea, Guaymas), Schematic Diagram, Sheet 2 of 4	7-107
7-28	Communication Technician's Console (Muchea, Guaymas), Schematic Diagram, Sheet 3 of 4	7-109
7-28	Communication Technician's Console (Muchea, Guaymas), Schematic Diagram, Sheet 4 of 4	7-111
7-29	Communication Technician's Console (Muchea, Guaymas), Wiring Diagram, Sheet 1 of 4	7-113
7-29	Communication Technician's Console (Muchea, Guaymas), Wiring Diagram, Sheet 2 of 4	7-115
7-29	Communication Technician's Console (Muchea, Guaymas), Wiring Diagram, Sheet 3 of 4	7-117
7-29	Communication Technician's Console (Muchea, Guaymas), Wiring Diagram, Sheet 4 of 4	7-119
7-30	Communication Technician's Console (Kauai Island), Schematic Diagram, Sheet 1 of 4	7-121
7-30	Communication Technician's Console (Kauai Island), Schematic Diagram, Sheet 2 of 4	7-123
7-30	Communication Technician's Console (Kauai Island), Schematic Diagram, Sheet 3 of 4	7-125
7-30	Communication Technician's Console (Kauai Island), Schematic Diagram, Sheet 4 of 4	7-127
7-31	Communication Technician's Console (Kauai Island), Wiring Diagram, Sheet 1 of 4	7-129
7-31	Communication Technician's Console (Kauai Island), Wiring Diagram, Sheet 2 of 4	7-131
7-31	Communication Technician's Console (Kauai Island), Wiring Diagram, Sheet 3 of 4	7-133
7-31	Communication Technician's Console (Kauai Island), Wiring Diagram, Sheet 4 of 4	7-135
7-32	Communication Technician's Console (Point Arguello), Schematic Diagram, Sheet 1 of 4	7-137
7-32	Communication Technician's Console (Point Arguello), Schematic Diagram, Sheet 2 of 4	7-139

LIST OF ILLUSTRATIONS (Continued)

Figure No.	Title	Page
7-32	Communication Technician's Console (Point Arguello), Schematic Diagram, Sheet 3 of 4	7-141
7-32	Communication Technician's Console (Point Arguello), Schematic Diagram, Sheet 4 of 4	7-143
7-33	Communication Technician's Console (Point Arguello), Wiring Diagram, Sheet 1 of 4	7-145
7-33	Communication Technician's Console (Point Arguello), Wiring Diagram, Sheet 2 of 4	7-147
7-33	Communication Technician's Console (Point Arguello), Wiring Diagram, Sheet 3 of 4	7-149
7-33	Communication Technician's Console (Point Arguello), Wiring Diagram, Sheet 4 of 4	7-151
7-34	Signal Presence Indicator, Schematic Diagram	7-153
7-35	Dual Power Supply, Schematic Diagram	7-155
7-36	Dual Power Supply, Wiring Diagram	7-157
7-37	Recovery Team Console (Grand Canary Island), Schematic Diagram	7-159
7-38	Audio Amplifier (P/O Recovery Team Console), Schematic Diagram	7-161
7-39	Audio Code Oscillator (P/O Recovery Team Console), Schematic Diagram	7-163
7-40	Control and Patch Panel (P/O Recovery Team Console), Wiring Diagram	7-165
7-41	RF Tuner (P/O Recovery Team Communications Transmitter), Schematic Diagram	7-167
7-42	VSWR Power Meter (P/O Recovery Team Communications Transmitter), Schematic Diagram	7-169
7-43	65-Volt Power Supply (P/O Communication Technician's Console)	7-171
7-44	Terminal Equipment Rack (Bermuda), Schematic Diagram	7-173
7-45	UHF Transmitter Rack, Wiring Diagram	7-175
7-46	Voice Receiver Rack (Standard Site), Wiring Diagram, Sheet 1 of 2	7-177
7-46	Voice Receiver Rack (Standard Site), Wiring Diagram, Sheet 2 of 2	7-179
7-47	Voice Receiver Rack (Bermuda), Wiring Diagram, Sheet 1 of 2	7-181
7-47	Voice Receiver Rack (Bermuda), Wiring Diagram, Sheet 2 of 2	7-183

LIST OF ILLUSTRATIONS (Continued)

Figure No.	Title	Page
7-48	Voice Receiver Rack (Cape Canaveral - Mercury Control Building), Wiring Diagram, Sheet 1 of 2	7-185
7-48	Voice Receiver Rack (Cape Canaveral - Mercury Control Building), Wiring Diagram, Sheet 2 of 2	7-187
7-49	Voice Receiver Rack (Cape Canaveral - Receiver Building No. 2), Wiring Diagram	7-189
7-50	Voice Receiver Rack (GBI and GTI), Wiring Diagram, Sheet 1 of 2	7-191
7-50	Voice Receiver Rack (GBI and GTI), Wiring Diagram, Sheet 2 of 2	7-193
7-51	Voice Receiver Rack (Ships), Wiring Diagram, Sheet 1 of 2	7-195
7-51	Voice Receiver Rack (Ships), Wiring Diagram, Sheet 2 of 2	7-197
7-52	Dual Speaker Panel, Wiring Diagram	7-199
7-53	Playback Control Panel, Wiring Diagram	7-201
7-54	HF Monitor Rack, Wiring Diagram	7-203
7-55	Signal Presence Indicator, Wiring Diagram	7-205
7-56	Trailer Van, Combination Wiring - Schematic Diagram	7-207
7-57	Trailer Van, Stop and Tail Light Assembly	7-209
7-58	Terminal Equipment Rack (Bermuda), Wiring Diagram, Sheet 1 of 2	7-211
7-58	Terminal Equipment Rack (Bermuda), Wiring Diagram, Sheet 2 of 2	7-213
7-59	Transmitter Van, Acquisition Bus and Display, Wiring Diagram (All Sites Except Cape Canaveral)	7-215
7-60	Transmitter Van, Servo Cabinet, Wiring Diagram	7-217
7-61	Transmitter Van, Signal and Control Wiring Diagram (Cape Canaveral)	7-219
7-62	Transmitter Van, Signal and Control Wiring Diagram (Kano, Canton Island, Zanzibar, Corpus Christi, Woomera)	7-221
7-63	Transmitter Van, Signal and Control Wiring Diagram (Grand Canary Island)	7-223
7-64	Transmitter Van, Signal and Control Wiring Diagram (Muchea, Guaymas, Kauai Island)	7-225
7-65	Transmitter Van, AC Power Wiring Diagram (Cape Canaveral)	7-227
7-66	Transmitter Van, AC Power Wiring Diagram (Grand Canary Island)	7-229
7-67	Transmitter Van, AC Power Wiring Diagram (Kano, Canton Island, Zanzibar, Corpus Christi, Woomera)	7-231

LIST OF ILLUSTRATIONS (Continued)

Figure No.	Title	Page
7-68	Transmitter Van, AC Power Wiring Diagram (Kauai)	7-233
7-69	Transmitter Van, AC Power Wiring Diagram (Muchea, Guaymas)	7-235
7-70	Transmitter Van, Special Intercom Wiring Diagram (Cape Canaveral)	7-237
7-71	Transmitter Van, Acquisition Bus and Display Wiring Diagram (Cape Canaveral)	7-239
7-72	Transmitter Van, Terminal Equipment Rack Wiring Diagram (Kauai)	7-241
7-73	Transmitter Van Command Control Wiring Diagram (Muchea, Guaymas)	7-243
7-74	Recovery Team Console (Grand Canary Island) Wiring Diagram	7-245
7-75	Audio Keying Oscillator (P/O Recovery Team Console), Wiring Diagram	7-247
7-76	Voice Receiving Antenna No. 1 RF Components, Schematic Diagram (All Sites Except Cape Canaveral, GBI, GTI, and Point Arguello)	7-249
7-77	Voice Receiving Antenna No. 2 RF Components, Schematic Diagram (All Sites Except Atlantic Ocean and Indian Ocean Ships)	7-251
7-78	Voice Receiving Antenna No. 2 RF Components, Schematic Diagram (Ships)	7-253
7-79	Active Acquisition Aid Antenna Safety Circuit, Schematic Diagram (All Sites Except Kano, Canton, and Zanzibar)	7-255
7-80	Active Acquisition Aid Antenna Safety Circuit, Schematic Diagram (Kano, Canton, and Zanzibar)	7-257
7-81	Transmitter Van, Cable Termination Box (Canton Island), Wiring Diagram	7-259
7-82	Transmitter Van, Cable Termination Box (Cape Canaveral), Wiring Diagram	7-261
7-83	Transmitter Van, Cable Termination Box (Corpus Christi), Wiring Diagram	7-263
7-84	Transmitter Van, Cable Termination Box (Grand Canary Island), Wiring Diagram	7-265
7-85	Transmitter Van, Cable Termination Box (Guaymas), Wiring Diagram	7-267
7-86	Transmitter Van, Cable Termination Box (Kano), Wiring Diagram	7-269

LIST OF ILLUSTRATIONS (Continued)

Figure No.	Title	Page
7-87	Transmitter Van, Cable Termination Box (Kauai Island), Wiring Diagram	7-271
7-88	Transmitter Van, Cable Termination Box (Muchea) Wiring Diagram	7-273
7-89	Transmitter Van, Cable Termination Box (Woomera) Wiring Diagram	7-275
7-90	Transmitter Van, Cable Termination Box (Zanzibar) Wiring Diagram	7-277

LIST OF TABLES

Table No.	(Volume I)	Page
1-I	Functions of Each Site	1-2
1-II	Equipment Supplied	1-3
1-III	Power Consumed by Equipment	1-9
1-IV	Summary of Equipment Technical Characteristics	1-14
1-V	Symbol Number Series	1-24
1-VI	Location and Function of Operating Controls	1-75
1-VII	Function and Quantities of Line Amplifiers Used at Each Site	1-101
1-VIII	Site Implementation	1-102
2-I	Equipment Mounting Hardware	2-7
2-II	Installation Wiring Information Books	2-8
3-I	Typical Meter Readings	3-14
3-II	Normal Turn-On Procedure	3-27
	(Volume II)	
5-I	Test Equipment Required for Maintenance	5-2
5-II	Lubrication Schedule	5-7
5-III	Preventive Maintenance Procedures	5-9
5-IV	System Minimum Performance Standards	5-27
5-V	Communication Technician's Console Minimum Performance Standards (Cape Canaveral)	5-39
5-VI	Communication Technician's Console Minimum Performance Standards (Grand Bahama Island and Grand Turk Island)	5-52
5-VII	Communication Technician's Console Minimum Performance Standards (Bermuda)	5-64

LIST OF TABLES (Continued)

Table No.		Page
5-VIII	Communication Technician's Console Minimum Performance Standards (Standard Site)	5-77
5-IX	Communication Technician's Console Minimum Performance Standards (Point Arguello)	5-91
5-X	Voice Receiver Rack Composite Minimum Performance Standards	5-113
5-XI	UHF Voice Transmitter Rack Minimum Performance Standards	5-121
5-XII	HF Monitor Rack Minimum Performance Standards	5-121
5-XIII	Voice Receiver Rack Minimum Performance Standards	5-122
5-XIV	Recovery Team Equipment Minimum Performance Standards	5-125
5-XV	Transmitter Van Minimum Performance Standards	5-127
5-XVI	System Trouble Analysis	5-146
5-XVII	Normal Voltages for Power Transformer T1	5-245
5-XVIII	65-VDC Remote Indicator Adjustments Cape Canaveral and Grand Bahama Island	5-254
5-XIX	65-VDC Remote Indicator Adjustments (Point Arguello)	5-268
6-I	Voice Receiver Rack, Standard Site	6-3
6-II	Voice Receiver Rack, Bermuda	6-7
6-III	Voice Receiver Rack, Cape Canaveral - Tel 3 Building	6-11
6-IV	Voice Receiver Rack, Cape Canaveral - Tel 2 Building	6-15
6-V	Voice Receiver Rack, Grand Bahama Island and Grand Turk Island	6-17
6-VI	Voice Receiver Rack, Atlantic and Indian Ocean Ships	6-20
6-VII	Dual Speaker Panel	6-24
6-VIII	Antenna Switching Unit	6-25
6-IX	Playback Control Panel	6-26
6-X	UHF Transmitter Rack	6-27
6-XI	HF Transmitter Monitor Rack	6-29
6-XII	Communication Technician's Console, Cape Canaveral	6-32
6-XIII	Communication Technician's Console, Bermuda	6-62
6-XIV	Communication Technician's Console, Muchea, Australia, and Guaymas, Mexico	6-89
6-XV	Communication Technician's Console, Kauai, Hawaii	6-116
6-XVI	Communication Technician's Console, Pt. Arguello, California	6-143

LIST OF TABLES (Continued)

Table No.		Page
6-XVII	Communication Technician's Console, Grand Bahama Island . .	6-170
6-XVIII	Communication Technician's Console, Grand Turk Island . . .	6-188
6-XIX	Communication Technician's Console, Atlantic and Indian Ocean Ships	6-206
6-XX	Communication Technician's Console, Grand Canary Island; Corpus Christi, Texas; Kano, Nigeria; Zanzibar; Canton Island	6-223
6-XXI	Dual Power Supply	6-241
6-XXII	Signal Presence Indicator	6-243
6-XXIII	Local/Remote & Program Unit	6-244
6-XXIV	Decoder Program Patch Box and Coder Program Patch Box . .	6-247
6-XXV	VSWR and Power Meter	6-248
6-XXVI	Transmitter Van	6-249
6-XXVII	Recovery Team Console	6-254
	(Volume III)	
7-I	Alphabetical Index to Drawings	7-1

Figure 1-1. Project Mercury Site Locations

SECTION I
GENERAL DESCRIPTION

1-1. GENERAL INFORMATION

A. SCOPE OF MANUAL

This publication comprises operating and servicing instructions for the capsule communication system which forms a part of the Mercury ground instrumentation.

B. PROJECT MERCURY SCOPE

(1). The prime objective of Project Mercury is manned orbital flight with a safe return of the man from orbit. The manned vehicle or satelite that is placed into orbit is called the capsule, and the individual making the orbital flight is called the astronaut.

(2). An Atlas ICBM propulsion with a radio-inertial guidance system will be used to place the capsule into orbit. The launch will be from the Air Force Missile Test Center at Cape Canaveral, Florida. Launch azimuth will be slightly north of east (inclined 32.5 degrees to the equator) with the nominal orbit insertion point approximately 410 nautical miles from Cape Canaveral. The planned orbit will have a period of 88 minutes and will be at an altitude of 105 ± 5 nautical miles.

(3). Initially, the orbital flights will each consist of three orbital cycles with a water landing along the Atlantic Missile Range west of Puerto Rico. In the event of an in-flight emergency, backup systems are provided in the capsule to permit the flight to continue until the next passage over the eastern United States. Emergency landings at the completion of one orbit can be made in the Atlantic off of Charleston, South Carolina or near Bermuda. At the end of the second passage, the emergency landing area is in the Atlantic off of Charleston, South Carolina. If a malfunction occurs during the early launch phase, emergency procedures will permit a water landing off of Cape Canaveral. Controlled retro firing will be used to bring the capsule down in an area near Bermuda or in the vicinity of the Canary Islands.

(4). To implement Project Mercury, a world wide network of 18 ground based tracking and instrumentation sites has been established together with a control center and a computing and communications center. Eleven of these sites are

equipped with long range tracking radars; these constitute the tracking network. Fourteen sites have telemetry receiving and display equipment. Six of the sites are equipped to transmit command control signals to the capsule; these are known as command sites. Sixteen of the sites are equipped with capsule communication equipment that provides two-way voice contact with the astronaut. In addition, all of the sites are linked with the computing and control centers by a ground communications network. See figure 1-1 for the locations of the sites.

C. SITE FUNCTIONS

From orbit insertion until landing, the tracking and ground instrumentation systems will provide continuous prediction of the capsule location, monitor the status of the capsule and astronaut, and permit the command functions necessary for the mission. The functions of the tracking and ground instrumentation systems are completed when the capsule has landed and the best possible information on the landing point location has been supplied to a recovery team. Table 1-I lists the various sites and the function of each.

TABLE 1-I. FUNCTIONS OF EACH SITE

	S-Band Radar Tracking	C-Band Radar Tracking	Telemetry & Capsule Communications	Command Control
Cape Canaveral, Fla.	X	X	X	X
Grand Bahama Island	-	-	X	-
Grand Turk Island	-	-	X	-
Bermuda	X	X	X	X
Atlantic Ship	-	-	X	-
Grand Canary Island	X	-	X	-
Kano, Nigeria	-	-	X	-
Zanzibar	-	-	X	-
Indian Ocean Ship	-	-	X	-
Muchea, Australia	X	-	X	X
Woomera, Australia	-	X	X	-
Canton Island	-	-	X	-
Kauai Island, Hawaii	X	X	X	X

TABLE 1-I. FUNCTIONS OF EACH SITE (Cont.)

	S-Band Radar Tracking	C-Band Radar Tracking	Telemetry & Capsule Communications	Command Control
Pt. Arguello, Calif.	X	X	X	X
Guaymas, Mexico	X	-	X	X
White Sands, N. M.	-	X	-	-
Corpus Christi, Texas	X	-	X	-
Eglin AFB, Florida	X	X	-	-

D. CAPSULE COMMUNICATION SYSTEM FUNCTION

The capsule communication system provides at every site a two-way voice communication link between the ground and the capsule. This system utilizes both UHF and HF frequency bands for reliability.

1-2. EQUIPMENT SUPPLIED

Table 1-II lists the equipment supplied for the capsule communication system together with the applicable equipment instruction books. The quantities of certain components will vary from site to site. Refer to paragraph 1-4 for the equipment supplied to a specific site. Both contractor-furnished and government-furnished equipment are listed.

Table 1-II. Equipment Supplied

Equipment	Manufacturer	Nomenclature or Model No.	Instruction Book Title	Manual No.
OPERATING EQUIPMENT				
Antenna Pedestal for Receiving Antenna #1	Cubic Corp.	Modified MP-81/SCR-584	Instruction Book for Active Acquisition Aid	ME129
Antenna Pedestal for Receiving Antenna #1, Receiving Antenna #2, and Voice Transmitting Antenna	Cubic Corp.	Canoga #8417	Instruction Manual for Project Mercury Antenna Systems	ME131
Antenna Pedestal for Voice and Command Transmitting Antenna	Cubic Corp.	Canoga #8417 pedestal with rotary joint	Instruction Manual for Project Mercury Antenna Systems	ME131
Triplexer	Rantec			

Table 1-II. Equipment Supplied (Cont.)

Equipment	Manufacturer	Nomenclature or Model No.	Instruction Book Title	Manual No.
Coaxial Attenuator	Empire Devices	AT-50-6		
Dipole Antenna Set (20-200 MC)	Empire Devices	DM 105-T1	Instruction Manual for Noise and Field Intensity Meter, Model NF-105	ME192
Dipole Antenna Set (200-400 MC)	Empire Devices	DM 105-T3	Instruction Manual for Noise and Field Intensity Meter, Model NF-105	ME192
Electronic Counter	Beckman	7370	Instruction Manual, Model 7370 Universal Eput and Timer	ME196
Frequency Converter	Beckman	7571 and 7573	Instruction Manual, Model 7570 series Frequency Conversion Equipment	ME197
Insulation Tester	J. C. Biddle	7679 ARK	Instruction Manual for Megger Insulation Testers	ME236
Line Bridging Transformer	Hewlett Packard	AC-60B	Operating Instructions for Hewlett-Packard Model AC-60B Bridging Transformer	ME256
Miscellaneous Cables and Accessories	-	-	-	-
Noise and Distortion Analyzer	Hewlett Packard	330B	Noise and Distortion Analyzer 330B/C/D, Operating and Servicing Manual	ME194
Noise and Field Intensity Meter	Empire Devices	NF105	Instruction Manual for Noise and Field Intensity Meter, Model NF-105	ME192
Noise Figure Meter	Airborne Instruments Laboratory	07414	Instruction Handbook for AIL Type 74 Automatic Noise-Figure Indicator	ME223
Noise Source (10-250 MC)	Airborne Instruments Laboratory	Type 07006	Handbook of Operating and Maintenance Instructions for Coaxial Noise Generator (AIL 7010)	ME220
Noise Source Power Supply	Airborne Instruments Laboratory	Type 71	Handbook of Operating and Maintenance Instructions for Type 71 Noise Generator Power Supply	ME214
Oscilloscope	Hewlett Packard	130B	Oscilloscope 130B, Operating and Servicing Manual	ME200

Table 1-II. Equipment Supplied (Cont.)

Equipment	Manufacturer	Nomenclature or Model No.	Instruction Book Title	Manual No.
Output Power Meter	Daven	OP 962	Instruction Manual, Power Output Meter Type OP-962	ME154
Power-Modulation Monitor	M. C. Jones	SG-41.1 and SG-41.2	Installation, Operation and Maintenance Instructions for Power-Modulation Monitor SG-41.1 and SG-41.2	ME143
Power-Modulation Monitor Coupler	M. C. Jones	576	Instruction Manual for Model 576FV	ME142
Power-Modulation Monitor Coupler	M. C. Jones	263-14	Micromatch 400 and 570 Series R.F. Power and VSWR Coupler	ME168
Recording Accessories				
Recording Voltmeter	General Electric	99X950	Instructions, Types CF-1, -2, -4, -5, and -8 Portable and Switchboard Recording Instruments (GEH-1080L)	ME237
RF Load Resistor	M. C. Jones	636-14		
RF Signal Generator	Boonton	225A	Instruction Manual for the Signal Generator Type 225-A	ME188
Signal Generator	Hewlett Packard	606A	High Frequency Signal Generator 606A, Operating and Servicing Manual	ME189
Spectrum Analyzer	Polarad	TSA (STU-1)	Handbook of Operating Instructions, Model T5A All-Band, Direct Reading Spectrum Analyzer	ME195
Tube Tester	Triplett	3444	Instruction Manual, Model 3444 Tube Analyzer	ME199
UHF Admittance Meter and Accessories	General Radio	1602-B	Operating Instructions, Type 1602-B Admittance Meter	ME213
Unit Oscillator	General Radio	1209-BL	Operating Instructions, Types 1209-B and BL Unit Oscillators	ME212
Unit Oscillator	General Radio	1214A	Operating Instructions, Types 1214-A, -D, -E, and -M, Unit Oscillators	ME241
Unit Regulated Power Supply	General Radio	1201-B	Operating Instructions, Type 1201-B Unit Regulated Power Supply	ME211
Vacuum Tube Voltmeter	Hewlett Packard	410-B	Vacuum Tube Voltmeter 410B, Operating and Servicing Manual	ME190
Vacuum Tube Voltmeter, AC	Hewlett Packard	400D/H/L	Vacuum Tube Voltmeter 400D/H/L, Operating and Servicing Manual	ME191

Table 1-II. Equipment Supplied (Cont.)

Equipment	Manufacturer	Nomenclature or Model No.	Instruction Book Title	Manual No.
Thermistor Mount	Hewlett Packard	477B	Operating and Service Notes, Hewlett Packard 477B Coaxial Thermistor Mount	ME234
Wide Range Oscillator	Hewlett Packard	200CD	Wide Range Oscillator 200CD, Operating and Servicing Manual	ME198
Preamplifier	Nems-Clarke	PR-203S	Instruction Book for Preamplifier PR-203S	ME144
Voice Receiver Rack	Bendix Radio	N651495	Capsule Communications System	MS102
UHF Voice Receiver	Collins Radio	Radio Receiver R-278B/GR	Handbook Service Instructions Radio Receivers R-278/GR, R-278A/GR, and R-278B/GR	ME145
			Illustrated Parts Breakdown - Receiver Group OA-192/GR	ME146
			Handbook Operating Instructions, Radio Set AN/GRC-27 T.O. 31R2-2GRC27-1)	
Diversity Combiner	Bendix Radio	BXR-DDU100	Instruction Manual, Bendix Radio Dual Diversity Combiner Model BXR-DDU100	ME156
HF Voice Receiver	GFE	Radio Receiver R-390A/URR	TM 11-856A	ME147
Preamplifier Control Panel	Nems-Clarke	p/o PR-203S	Instruction Book for Preamplifier PR-203	ME144
HF/UHF Signal Generator	Bendix Radio	BXR-SG300	Instruction Manual HF/UHF Signal Generator Model BXR-SG300	ME157
Dual Track Tape Recorder	Magnacord	Model 728	Instruction Manual, Model 728 Tape Recorder	ME149
HF Voice Receiver Bandpass Filter	Applied Research, Inc.	Model HFF-D 6/2	Instruction Manual for HF Receiver Bandpass Filter, Model HFF-D 6/2	ME117
Transmitter Van	DeKalb	Project Mercury Trailer Van		

Table 1-II. Equipment Supplied (Cont.)

Equipment	Manufacturer	Nomenclature or Model No.	Instruction Book Title	Manual No.
UHF Transmitter Rack	Bendix Radio	N651479	Capsule Communication System, Operation and Maintenance Manual	MS102
UHF Power Modulation Monitor	M. C. Jones	SG-41.2	Installation, Operation and Maintenance Instructions for Power Modulation Monitor SG-41.1 and SG-41.2	ME143
UHF Bidirectional Coupler	M. C. Jones	576FV	Instruction Manual for Model 576FV	ME142
UHF Dummy Load	M. C. Jones	636.14	-	-
UHF Coax Switch	Transco Prod.	Type Y 11800	-	-
UHF Voice Transmitting Set	Radio Receptor	Radio Transmitting Set AN/GRT-3 (includes Radio Transmitter T-282/GR and Modulator/Power Supply MD-141/GR)	Handbook, Service Instructions, Radio Transmitting Set AN/GRT-3	ME141
UHF Cavity Filter	Adams-Russell	Model 310 UHF Filter	Capsule Communications System, Operation and Maintenance Manual	MS102
UHF Low Pass Filter	Adams-Russell	700	Capsule Communication System, Operation and Maintenance Manual	MS102
HF Voice Transmitter	Gates Radio	CS-2029	Instruction Book, Modified CMG-1 Transmitter CS2029	ME139
HF Monitor Rack	Bendix Radio	N651494	Capsule Communication System, Operation and Maintenance Manual	MS102
Patch Panel	Technical Material Corp.	QDP6SP10-3	Capsule Communication System, Operation and Maintenance Manual	MS102
HF Power Modulation Monitor	M. C. Jones	SG-41.1	Installation, Operation and Maintenance Instructions for Power Modulation Monitor SG-41.1 and SG-41.2	MS143
HF Bidirectional Coupler	M. C. Jones	263.14	Instruction Manual for RF Power and VSWR Meter Model 263.14	ME167
HF Coaxial Switch	Transco Prod.	Model 11800	-	-
HF Dummy Load	M. C. Jones	636.14	-	-

Table 1-II. Equipment Supplied (Cont.)

Equipment	Manufacturer	Nomenclature or Model No.	Instruction Book Title	Manual No.
HF Sidetone Line Amplifier	Bendix Radio	Line Amplifier Model BXR-LA200	Instruction Manual, Bendix Radio Amplifier Model BXR-LA200	ME155
HF Transmitter Bandpass Filter	Applied Research, Inc.	Model HFF-3	Instruction Manual for HF Transmitter Bandpass Filter Model HFF-3	ME137
Communication Technician's Console	Bendix Radio	BXR-CTC500	Capsule Communication System, Operation and Maintenance Manual	MS102
Microphone Preamplifier	Gates Radio	M-5167 Sta-Level Amplifier	M-5167 Sta-Level Amplifier Instruction Book	ME140
Audio Code Oscillator	Bendix Radio	BXR-MC0400	Instruction Manual, Bendix Radio Audio Code Oscillator Model BXR-MC0400	
Adjustable Attenuator	General Radio	874-GA		
Antenna Equipment	Empire Devices	LM 105	Instruction Manual for Noise and Field Intensity Meter, Model NF-105	ME192
Attenuator Assembly	Ortho	Type V7 and V8		
Attenuator Pads	Telonic	TGC-50		

A. EQUIPMENT AND SYSTEM POWER CONSUMPTION

Table 1-III lists the primary power consumed by the individual equipments, the rack assemblies, and the complete capsule communications system. The wattage figures in the table are representative of normal full load operational conditions. The wattage figures for the rack assemblies are representative of the sites listed. The total power requirement for the systems as listed in the table is an approximate figure. Also,there has been no consideration given to current drain on the rack assembly utility outlets.

TABLE 1-III. POWER CONSUMED BY EQUIPMENT

Equipment	Power in Watts
HF Voice Receiver	225
UHF Voice Receiver	350
HF Voice Transmitter	1500
UHF Voice Transmitter	1500
Dual Diversity Combiner	175
Preamplifier	57
Dual Track Tape Recorder	200
HF Sidetone Line Amplifier	25
HF Power Modulation Monitor	40
UHF Power Modulation Monitor	40
Microphone Preamplifier	50
Communication Technician's Console (3 rack)	800
Communication Technician's Console (2 rack)	575
HF/UHF Signal Generator	50
Amplidynes for Antenna Pedestal and Servo System require 120/208, 3-phase A-C, 15 A/leg power.	
Voice Receiver Rack Assembly (Typical Site)	1575
Voice Receiver Rack Assembly (Cape Canaveral Single Rack)	400
Voice Receiver Rack Assembly (GBI and GTI)	1200
Voice Receiver Rack Assembly (Bermuda)	1375
HF Monitor Rack Assembly (Typical Site)	1540
UHF Transmitter Rack Assembly (Typical Site)	1820
Recovery Team Console (Grand Canary Island only)	320
Recovery Team Communication Transmitter Rack (GCI only)	1500
Transmitter Van Assembly (Typical Site)	
Servo Rack	2200
UHF Transmitter Rack	1820
HF Monitor Rack Assembly	1540
Total	4560 Watts

TABLE 1-III. POWER CONSUMED BY EQUIPMENT (Cont.)

Equipment	Power In Watts
Transmitter Van Assembly (Muchea and Guaymas)	
Servo Rack	2200
UHF Transmitter Rack	1820
HF Monitor Rack Assembly	1540
Terminal Equipment Rack	1000
Master Command Transmitter	4650
Standby Command Transmitter	4650
Total	15860 Watts
Transmitter Van Assembly (Cape Canaveral)	
Servo Rack	2200
UHF Transmitter Rack	1820
(Master) HF Monitor Rack Assembly	1540
(Stand by) HF Transmitter Rack	1500
Synchro Remoting System	1000
Total	8060 Watts
Transmitter Van Assembly (Grand Canary Island)	
Servo Rack	2200
UHF Transmitter Rack	1820
Recovery Team Console	320
Recovery Team Communication Transmitter	1500
HF Monitor Rack Assembly	1540
Total	7380 Watts
CAPSULE COMMUNICATION SYSTEM POWER CONSUMPTION	
Capsule Communication System (Cape Canaveral)	
Communication Technicians Console (3 rack)	800
Transmitter Van Assembly	8060
UHF Voice Receiver No. 3	400
Voice Receiver Rack	1575
Total	10835 Watts

TABLE 1-III. POWER CONSUMED BY EQUIPMENT (Cont.)

Equipment	Power In Watts
CAPSULE COMMUNICATION SYSTEM POWER CONSUMPTION (Cont.)	
Capsule Communication System (Grand Bahama Island)	
Transmitter Building	
UHF Transmitter Rack Assembly	1820
HF Monitor Rack Assembly	1540
Transmitting Antenna Servo Rack	2200
Total	5560 Watts
Receiver Building	
Communication Technician's Console (2 rack)	575
Voice Receiver Rack Assembly	1200
Receiving Antenna Servo Rack	2200
Total	3975 Watts
Combined System Total	9535 Watts
Capsule Communication System (Grand Turk Island)	
Transmitter Building	
UHF Transmitter Rack Assembly	1820
(Master) HF Monitor Rack Assembly	1540
(Stand by) HF Transmitter Rack	1500
Transmitting Antenna Servo Rack	2200
Total	7060
Receiver Building	
Communication Technician's Console (2 rack)	575
Voice Receiver Rack Assembly	1200
Receiving Antenna Servo Rack	2200
Total	3975 Watts
Combined System Total	11035 Watts

TABLE 1-III. POWER CONSUMED BY EQUIPMENT (Cont.)

Equipment	Power In Watts
CAPSULE COMMUNICATION SYSTEM POWER CONSUMPTION (Cont.)	
Capsule Communication System (Bermuda)	
Town Hill	
Voice Receiver Rack Assembly	1375
Receiving Antenna No. 1 Servo Rack	2200
Receiving Antenna No. 2 Servo Rack	2200
Total	5775 Watts
Coopers Island	
Communication Technician's Console (3 rack)	800
UHF Transmitter Rack Assembly	1820
(Master) HF Monitor Rack Assembly	1540
(Stand by) HF Transmitter Rack	1500
Transmitting Antenna No. 1 Servo Rack	2200
Transmitting Antenna No. 2 Servo Rack	2200
Dual Track Tape Recorder	200
Total	10260 Watts
Combined System Total	16035 Watts
Capsule Communication System (Atlantic and Indian Ocean Ships)	
Telemetry Room	
Communication Technician's Console (2 rack)	575
Voice Receiver Rack	1575
Receiving Antenna Servo Rack	2200
Total	4350 Watts
Transmitter Area	
UHF Transmitter Rack	1820
HF Monitor Rack Assembly	1540
Transmitting Antenna Servo Rack	2200
Total	5560 Watts
Combined System Total	9910 Watts

TABLE 1-III. POWER CONSUMED BY EQUIPMENT (Cont.)

Equipment	Power In Watts
Capsule Communication System (Grand Canary Island)	
Communication Technician's Console (2 rack)	575
Voice Receiver Rack Assembly	1575
Receiving Antenna No. 1 Servo Rack	2200
Receiving Antenna No. 2 Servo Rack	2200
Transmitter Van Assembly	7380
Total	13930 Watts
Capsule Communication System (Typical Site) *	
Communication Technician's Console (2 rack)	575
Voice Receiver Rack Assembly	1575
Receiving Antenna No. 1 Servo Rack	2200
Receiving Antenna No. 2 Servo Rack	2200
Transmitter Van Assembly	4560
Total	11110 Watts
*Sites herein referenced are: Kano, Canton, Zanzibar, Woomera, Corpus Christi, and Kauai	
Capsule Communication System (Typical Command Site) **	
Communication Technician's Console (3 rack)	800
Voice Receiver Rack Assembly	1575
Receiving Antenna No. 1 Servo Rack	2200
Receiving Antenna No. 2 Servo Rack	2200
Transmitter Van Assembly	15860
Total	22635 Watts
** Sites included in the above are Muchea and Guaymas	
Capsule Communication System (Point Arguello)	
Communication Technician's Console (3 rack)	800
Voice Receiver Rack Assembly	1575
Receiving Antenna No. 1 Servo Rack	2200

TABLE 1-III. POWER CONSUMED BY EQUIPMENT (Cont.)

Equipment	Power In Watts
Receiving Antenna No. 2 Servo Rack	2200
Transmitting Antenna Servo Rack	2200
UHF Transmitter Rack Assembly	1820
HF Monitor Rack Assembly	1540
Total	12335 Watts

B. TECHNICAL CHARACTERISTICS OF EQUIPMENTS

Table 1-IV lists the technical characteristics of the equipments comprising the capsule communications system.

TABLE 1-IV. SUMMARY OF EQUIPMENT TECHNICAL CHARACTERISTICS

Feature	Description
HF/UHF SIGNAL GENERATOR	
Frequency range HF	a. 15 to 30 megacycles (HF) b. 260 to 300 megacycles (UHF)
Frequency accuracy	a. plus or minus 0.01% (HF) b. plus or minus 0.005% (UHF)
RF stability	a. 1 KC (HF) b. 5 KC (UHF)
Modulation	Fixed amplitude modulation at 1020 cps
Per cent of modulation	Adjustable 5% to 40%
Output impedance	52 ohms
Signal level	Minimum of 10 milliwatts into 52 ohms
Power requirements	105/125 VAC, 50/60 cps, single phase
Power consumption	50 watts
AUDIO AMPLIFIER	
Input level	From -35.0 to 0.0 dbm (0.014 to 0.775 volts RMS)
Input impedance	600 ohms balanced
Gain	40.0 db (non-limited signal)
Output level	Adjustable from -10.0 dbm to 13.0 dbm

TABLE 1-IV. SUMMARY OF EQUIPMENT TECHNICAL CHARACTERISTICS (Cont.)

Feature	Description
AUDIO AMPLIFIER (Cont.)	
Output impedance	600 ohms balanced
Frequency response	20 to 16,000 cps, ±3 db from 1,000 cps reference
Hum level	-50.0 db below 0.0 dbm (0.00245 volt)
Signal regulation	±1.0 db with a change of 10.0 db input level
Attack time	0.05 second
Recovery time	2.0 seconds
Power requirements	105/125 VAC, 50/60 cps, single phase, 0.30 amperes
Power consumption	25 watts
UHF VOICE RECEIVER	
Frequency range	225.0 to 399.9 megacycles
No. of operating frequencies	1750 spaced at 0.1 megacycle intervals
No. of preset channels	10 selected remotely plus 1 selected locally
Channel change time	Not more than 5 seconds
Type of frequency control	Quartz crystals
No. of crystal units	38
Type of receiver	Triple-conversion superheterodyne with automatic tuning, automatic noise limiting, delayed and amplified automatic volume control and carrier-operated relay circuits
Sensitivity	At maximum setting of the "RF GAIN" control, a 6 microvolt signal with 30% modulation at 1000 cps will produce not less than 1.0 watt output at not less than 10 db signal-to-noise ratio.
Selectivity	Bandwidth not less than 85 KC (65 KC for R-278A/GR and R-278B/GR) at 6 db attenuation; not more than 225 KC (185 KC for R-278A/GR and R-278B/GR) at 6 db attenuation

TABLE 1-IV. SUMMARY OF EQUIPMENT TECHNICAL CHARACTERISTICS (Cont.)

Feature	Description
UHF VOICE RECEIVER (Cont.)	
Frequency stability	±10 KC
Image Frequency rejection	More than 60 db below input signal level
Intermediate frequency rejection	More than 80 db below input signal frequency level
Types of reception	Voice; amplitude-modulated radio--telemetry; Tone: MCW
Input impedance	52 ohms
Output characteristics:	
Main output	3 watts into 600 ohm balanced load
Auxiliary output	+10 dbm into 600 ohm termination at "AUX. CONTROL" connector and "LOCAL CONTROL" connector
Direction finder output	Cathode follower type output for direction finding equipment available at "AUX. CONTROL" connector. (Although receiver R-278/GR will have a 30 cps output when receiving signals modulated with 30 cps, this output does not meet the requirements of the direction finding system. Receivers R-278A/GR and R-278B/GR do meet the requirements of the direction finding system.)
Audio frequency responses:	
Broad	Flat within 4 db from 200 to 20,000 cps
Narrow	Frequency in cycles / DB Attenuation 200 — greater than 10 400 — less than 5 1000 — 0 3000 — less than 5 5000 — greater than 10
Distortion	Less than 5% at 30% modulation and 3 watts output
AVC characteristics	Audio output constant: a. with ±2 db for signal input from 10 microvolts to 0.1 volt

TABLE 1-IV. SUMMARY OF EQUIPMENT TECHNICAL CHARACTERISTICS (Cont.)

Feature	Description	
UHF VOICE RECEIVER (Cont.)		
	b. within ±6 db for signal input from 0.1 volt to 2 volts	
AVC Time Constants:		
Short (COMM)	1/10 second (for communication)	
Long (D/F)	Approximately 3 seconds (for direction finding operation)	
Carrier-operated relay sensitivity	3.0 microvolt or more RF signal input sufficient to cause operation of relay at maximum setting of "RF GAIN" control	
Power requirements:		
A-c supply voltage	115 or 230 volts	
A-c supply frequency	50/60 cps	
A-c power factor	approximately 95 per cent	
	During First 10 Minutes	After First 10 Minutes
Normal operation	385 watts	265 watts
Period of channel selection	470 watts	350 watts
HF VOICE RECEIVER		
Type of circuit	Triple-conversion superheterodyne on eight lowest frequency bands; double-conversion superheterodyne on all other bands.	
Frequency range	0.5 to 32 megacycles	
Types of signals received	A1, CW; A2, MCW; A3, voice; A9, single sideband; F1, frequency-shift keying	
Type of tuning	Continuous; frequency read directly on counter-type indicator	
Method of calibration	Built-in crystal-controlled	
Calibration points	Every 100 KC	
Audio Power output:		
600 ohm unbalanced line	500 MW, minimum	
600 ohm balanced line	10 MW, minimum	

TABLE 1-IV. SUMMARY OF EQUIPMENT TECHNICAL CHARACTERISTICS (Cont.)

Feature	Description
HF VOICE RECEIVER (Cont.)	
Headphones	1 MW, minimum
IF selectivity	100 cps to 16 KC bandwidth in six steps
Intermediate frequencies:	
First variable IF (used on eight lowest frequency bands)	17.5 to 25 megacycles
Second variable IF (used on all bands)	2.5 to 2 megacycles on lowest band; 3 to 2 megacycles on all other bands
Third (fixed) IF	455 KC
Power source	115/230 VAC ±10%, 48 to 62 cps
Power input:	
115/230 VAC	225 watts total; 140 watts with "OVENS" switch turned to "OFF"
No. of tubes	26 (including current-regulator tube RT510)
Antennas:	
Unbalanced	Straight-wire of random length or vehicular-mounted whip
Balanced	125 ohm terminating impedance; matches 50 to 200 ohm balanced or unbalanced transmission lines by using adapters
Temperature range	-40°C (-40°F) to 65°C (149°F)
Altitude	Up to 10,000 feet above sea level
Weight	75 pounds
Range of VFO	3.455 to 2.455 megacycles
PREAMPLIFIER	
Bandwidth	20 megacycles
Operating center frequency	260 to 300 megacycles
Uniformity of response	±1.5 db of midband response
Gain	26 db minimum in passband
Impedance	Designed to operate in 50 ohm system
Noise figure	4.0 db maximum, ±10 megacycles of center frequency
Power consumption	57 watts

TABLE 1-IV. SUMMARY OF EQUIPMENT TECHNICAL CHARACTERISTICS (Cont.)

Feature	Description
DUAL TRACK TAPE RECORDER	
Reel size	Up to 10-1/2 inches NARTB
Tape speed	7.5 and 15 inches per second, direct drive
Starting time	Less than 0.2 second
Stopping time	Less than 2 inches of tape when operating at 15 ips
Rewind and fast forward time	1600 feet per minute
Playing time	30 minutes at 7.5 ips with 1200 feet, 1.5 mil tape
Timing accuracy	±3 seconds in 30 minutes
Flutter and wow	0.1% at 15 ips, 0.15% at 7.5 ips
Frequency response	40 to 15,000 cps, ±2 db at 7.5 ips; 30 to 18,000 cps, ±2 db at 15 ips
Signal-to-noise ratio	Better than 55 db per channel
Cross talk	Better than 55 db per channel
Heads	a. Erase head; full track, half track or split stereo at customer's option.
	b. Record head and reproduce head; full track, half track or in-line stereo (additional heads available for quarter track or special applications.)
Remote control	With single pole/single throw switch installed, the recorder may be start-stopped in any mode of operation.
Input sensitivity	-90 dbm to -30 dbm
Input	a. Two high-impedance microphones (for use with two 250,000 ohm impedance unbalanced bridge inputs)
	b. Two low-impedance microphones (for use with optional input transformers 50,000 ohm impedances)
Output	a. Cathode follower (for use with unbalanced line, minimum load impedance 20,000 ohms)
	b. 600 ohm balanced line (for use with optional input transformers)

TABLE 1-IV. SUMMARY OF EQUIPMENT TECHNICAL CHARACTERISTICS (Cont.)

Feature	Description
DUAL TRACK TAPE RECORDER (Cont.)	
Weight	Approximately 50 pounds
Input power requirements	117 volts, 60 cycles, AC, 1.75 amperes, 200 watts
MICROPHONE PREAMPLIFIER	
Gain	a. 35 db, ±2 db with input and output pads intact b. 62 db, ±2 db with input and output pads removed
Distortion	1% or less from 50 to 15,000 cycles, 0-30 db compression or gain reduction as read on compression meter
Response	±1 db from 30 to 15,000 cycles, 0-30 db compression
Noise	65 db or better below +8 dbm or higher output at any gain setting
Attack/Recovery time	Factory wired for average programming (time constants may be varied, if desired)
Compression ratio and threshold	Compression ratio is approximately 3.3 to 1 and the threshold is +10 to +12 dbm output as wired at the factory, with the output control at maximum. The meter is calibrated for this setting. (These levels and ratios can be changed.)
Impedances	500/600 ohms as wired at factory. Pad values may be changed to other impedances. If pads are removed, input and output may be connected 150/250 or 500/600 ohms with transformer connections
Power	105/125 volts, 50/60 cycles, approximately 50 watts
Weight	Approximately 30 pounds

TABLE 1-IV. SUMMARY OF EQUIPMENT TECHNICAL CHARACTERISTICS (Cont.)

Feature	Description
HF VOICE TRANSMITTER	
Frequency range	14 to 31 megacycles on either of two pre-set channels with instantaneous switching from one channel to the other
Power output	250 watts from 14 to 26 megacycles; 200 to 225 watts from 26 to 31 megacycles
Modulation input circuit	500/600 ohm audio line input or any high impedance microphone at the transmitter
Primary power requirements:	
Operation under average conditions	117 volts, 60 cycles, single phase, 1500 watts
100% sustained sine wave modulation	1725 VA
Normal speech modulation	1400 VA (average)
All voltages applied and no modulation	1100 VA
Filaments and low voltages only	250 VA
Proposed minimum power output of 100 watts, 100% modulation	950 VA
POWER MODULATION MONITOR SG-41.1 AND SG-41.2	
Power range monitored	SG-41.1; 400 watts, output from coupler must be 1.1 VDC; SG-41.2, 200 watts, output from coupler must be 1.6 VDC
RF power measurement accuracy	Determined by particular coupler used, but usually ±5% of full scale power
Primary power	115 VAC, 60 cycles, approximately 40 watts
Weight	Approximately 10 pounds
UHF VOICE TRANSMITTER	
Frequency range	225 to 399.9 megacycles
Type of frequency control	Quartz crystal
Power output	100 watts into a 50 ohm load
Modulation input circuit	50 ohm (carbon microhpone input) and 600 ohm (audio line input)

TABLE 1-IV. SUMMARY OF EQUIPMENT TECHNICAL CHARACTERISTICS (Cont.)

Feature	Description
UHF VOICE TRANSMITTER (Cont.)	
Temperature range	-29°C (-20°F) to +55°C (+131°F)
Primary power requirements under peak operating conditions	105/125 or 210/250 volts, 50/60 cycles, 1500 watts
ANTENNA SYSTEM	
Antenna pedestal: (Modified AN/SCR-584, Canoga #8417, and Canoga #8417 with rotary joint)	
Elevation limits	Minus 10° to plus 110°
Azimuth limits	540°
Slew rate	30° per second in both axes
Maximum tracking rate	10° per second
Tracking accuracy	a. Modified AN/SCR-584 (at 10° per second tracking rate); azimuth 0.5°; elevation 0.5° at angles greater than 15°, 1.0° at angles between 10° and 15°. b. Canoga #8417 and Canoga #8417 with rotary joint: azimuth and elevation ±2° when operating the servo controls in the local mode and determining pointing position from the indicators provided in the servo rack.
Receiving antenna No. 1:	
Type of array	a. Four, nine-turn helices (UHF) b. Dipole and reflector (HF)
Polarization	a. Circular, right hand sense (UHF) b. Horizontal (HF)
Frequency	a. 225-300 megacycles (UHF) b. 15-30 megacycles (HF)
Receiving antenna No. 2 and voice transmitter antenna:	
Type of array	a. Four, nine-turn helices (UHF) b. Dipole and reflector (HF)
Polarization	a. Circular, left hand sense (UHF) b. Horizontal (HF)

TABLE 1-IV. SUMMARY OF EQUIPMENT TECHNICAL CHARACTERISTICS (Cont.)

Feature	Description
ANTENNA SYSTEM (Cont.)	
Frequency	a. 225-300 megacycles (UHF)
	b. 15-30 megacycles (HF)
Power capabilities	a. 200 watts (UHF)
	b. 200 watts (HF)
Voice and command transmitting antennas:	
Type of array	a. Four, nine-turn helices (UHF)
	b. Dipole and reflector (HF)
	c. Four, eleven-turn helices (command signals)
Polarization	a. Circular, left hand sense (UHF)
	b. Horizontal (HF)
	c. Circular, left hand sense (command signals)
Frequency	a. 225-300 megacycles (UHF)
	b. 15-30 megacycles (HF)
	c. 405-450 megacycles (command signals)
Power capabilities	a. 200 watts (UHF)
	b. 200 watts (HF)
	c. 10 KW (command signals)
DUAL DIVERSITY COMBINER	
Input Signal (channel #1 and #2)	Audio frequency; 0.3 to 5.0 volts RMS with 1.0 nominal
Input impedance (channel #1 and #2)	500K ohms
Output signal (low level)	100 to 4000 cps at 0.01 watts
Output signal (high level)	100 to 400 cps at 3.0 watts
Output impedance (high-level and lo-level	600 ohms balanced
Input power requirement	105/125 volts, 60 cps, single phase, 175 watts

C. SYMBOL NUMBER SERIES

Equipment racks and certain individual equipments of the capsule communications system are assigned a block of symbol numbers to designate replaceable parts. The symbol number series will thus identify the equipment or rack to which a particular symbol number belongs. Table 1-V lists the symbol number series of each rack and those rack mounted equipments manufactured by Bendix Radio. Rack mounted equipments not listed in the table carry symbol numbers designated by the manufacturer. As shown in the table, the equipments are assigned a hundred series and the racks are assigned a thousand series. For example, terminal board TB4701 designates terminal board number 1 of the dual speaker panel (700 series) which is a part of the voice receiver rack (4000 series). It should be noted that duplications of hundred series blocks exist in the table. Those equipments that contain duplicate hundred series blocks, however, are never located in the same rack. Therefore, the duplication is eliminated by the rack thousand series. For example, the signal presence indicator (301-399 series) is always located in the communication technician's console which carries a 1000 series. Therefore, this block of numbers becomes 1301-1399. The dual diversity power supply (also 301-399 series) is always located in the voice receiver rack which carries a 4000 series. Therefore, this block of numbers becomes 4301-4399.

TABLE 1-V. SYMBOL NUMBER SERIES

Symbol Number	Rack and Equipment
1001-1099	Communication technician's console
101-199	Line amplifier
201-299	+28 VDC power supply
301-399	Signal presence indicator
401-499	Intercom panel
2001-2099	UHF transmitter rack
3001-3099	HF monitor cabinet
4001-4099	Voice receiver rack
101-299	Dual diversity combiner
301-399	Dual diversity combiner power supply
501-599	HF/UHF signal generator
601-699	HF/UHF signal generator power supply
701-799	Dual speaker panel
801-899	Antenna switching panel
5001-5099	Terminal equipment rack

1-3. CAPSULE COMMUNICATION SYSTEM (TYPICAL SITE)

A. GENERAL

(1). The capsule communication system at a typical site consists of two UHF voice receiving systems, two UHF voice transmitting systems, two HF voice receiving systems, and one HF voice transmitting system. Three sites have an additional HF voice transmitting system. Certain components are common to two or more systems, so the word "system" is meant to imply a capability rather than a complete and independent set of specific equipments.

(2). In some cases, two similar systems can be used simultaneously. When they cannot, one is held as an operational stand by. Figure 1-2 shows the modes of operation possible with the capsule communication system. UHF transmission is possible using either the master or the standby UHF transmitter. HF transmission is possible only with the master HF transmitter except at the three sites equipped with a standby HF transmitter. Transmissions on UHF and HF frequencies can be made simultaneously using any combination of master and standby transmitters. It is not possible, however, to transmit using the two UHF transmitters simultaneously. Neither is it possible, at sites so equipped, to use the two HF transmitters simultaneously. The not-in-use transmitters are kept under filament power and can be used to replace the in-use transmitter at a moment's notice by pressing a single switch on the communication technician's console, the central remote control point for capsule communications. Voice signals are normally used to modulate the transmitters, but provisions are made so that modulated CW signals can be used if operating or atmospheric conditions so dictate. Provision has also been made to permit transmission of voice or MCW signals over the transmitters used with the command system in the event that the voice communication transmitting system should become inoperative.

Note

It is possible to select all three types of transmitters for voice communication simultaneously; i.e., UHF, HF, and EMER. VOICE (command).

(3). Figure 1-2 also shows the possible combination of receiving capabilities that can be used in the voice communications system. Normal operating procedures call for the use of space diversity reception using two UHF voice receivers or

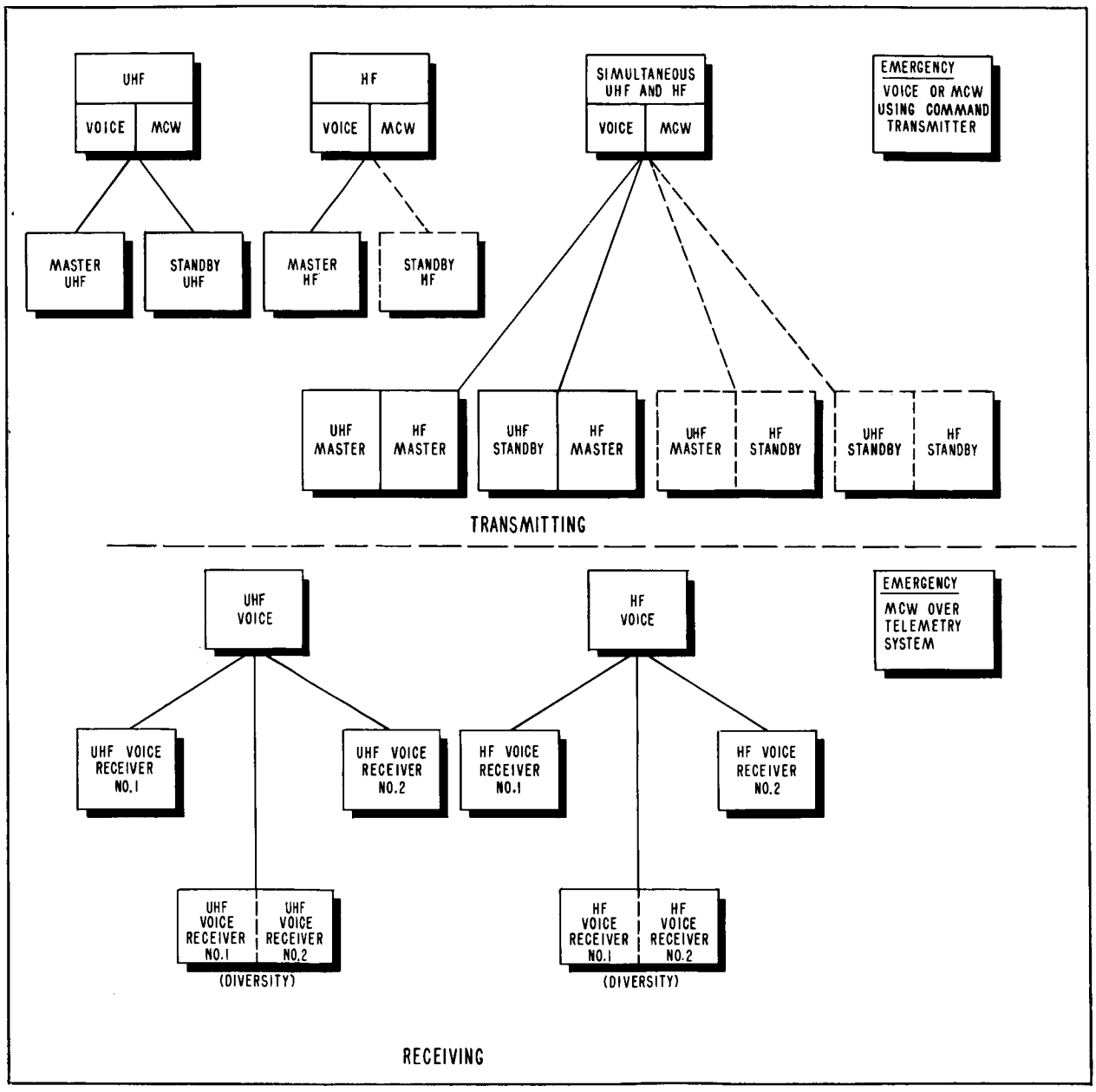

Figure 1-2. Operating Modes, Capsule Communication System

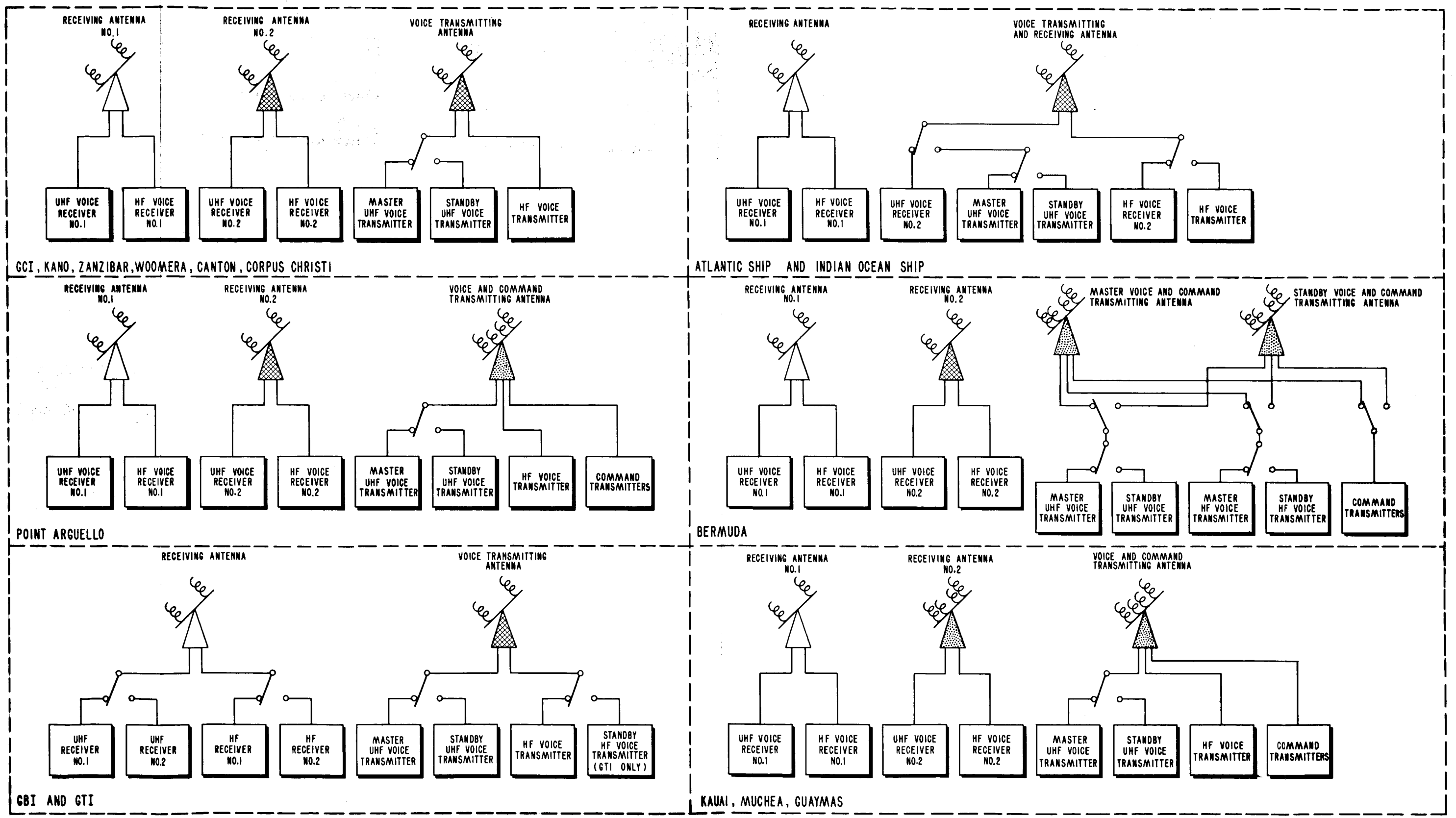

NOTES:

1. ALL RECEIVING ANTENNAS ALSO FEED TELEMETRY RECEIVING SYSTEM.
2. AT EVERY SITE EXCEPT POINT ARGUELLO RECEIVING ANTENNA NO.1 ALSO FEEDS THE ACTIVE ACQUISITION AID.

△ — UHF R.H. QUAD-HELIX AND HF DIPOLE ARRAYS.

▲ — UHF L.H. QUAD-HELIX AND HF DIPOLE ARRAYS.

▲ — UHF L.H. QUAD-HELIX, COMMAND QUAD-HELIX, AND HF DIPOLE ARRAYS.

Figure 1-3. Site Antenna Complements

two HF voice receivers. Each of the receivers can be used singly, however. Because the two receivers of one frequency are used at the same time they are designated No. 1 and No. 2 rather than master and stand by. Although the receivers of only one frequency band can be used at any given time, the second frequency is constantly monitored. Indicator lamps on the console light to show the presence of signals in the not-in-use frequency, and such signals, as well as all in-use frequency signals, are recorded on tape.

(4). Should the voice communication receiving system fail completely, communication can be maintained with the capsule by using the telemetry receiving system to receive MCW signals generated by the astronaut.

B. PHYSICAL DESCRIPTION

The capsule communications system consists of the antenna plus four major racks of equipment. These racks are designated the communication technician's console, the voice receiver rack, the UHF transmitter rack, and the HF transmitter cabinet. A smaller rack, the HF monitor rack, sits on top of the HF transmitter cabinet, and, functionally, is a part of it. The communication technician's console and the voice receiver rack are normally located in the same room. The UHF transmitter rack and the HF transmitter cabinet are, at most sites, housed within a mobile van. Location of the van with respect to the antennas varies greatly from site to site. Each of the above racks is described in detail on the following pages.

(1). ANTENNA EQUIPMENT

(a). GENERAL

The antennas used with the capsule communications system consist of circularly polarized, quad-helix arrays for the UHF frequencies and horizontally polarized dipoles for the HF frequencies. Both are mounted on a common ground plane screen and are supported by one of three types of pedestals: a modified AN/SCR-584, a Canoga No. 8417, or a Canoga No. 8417 with rotary joint. The polarization of the UHF antenna may be either right- or left-hand and the arrays are designated accordingly. The UHF antennas are broad banded so that they can receive telemetry carriers (TM1 and TM2) as well as the UHF voice carrier. The UHF antennas in certain instances are used by the acquisition system. At the command sites, certain capsule

communication system antennas are also used with the command system. Figure 1-3 shows the number, type, and function of the capsule communication antennas at all sites except Cape Canaveral. In general, there are four major types of antennas: receiving antenna No. 1, receiving antenna No. 2, voice transmitting antenna, and voice and command transmitting antenna. In addition, the TLM-18 telemetry antenna is used at Cape Canaveral to feed the UHF voice receiver (see figure 1-4.) Separate HF antennas are used at Cape Canaveral for the HF receivers. These are mounted on the Mercury Control Center Building. They can be positioned remotely, but they will not track during a capsule pass. For the ships the ground plane screens are modified. The major antenna types are described below.

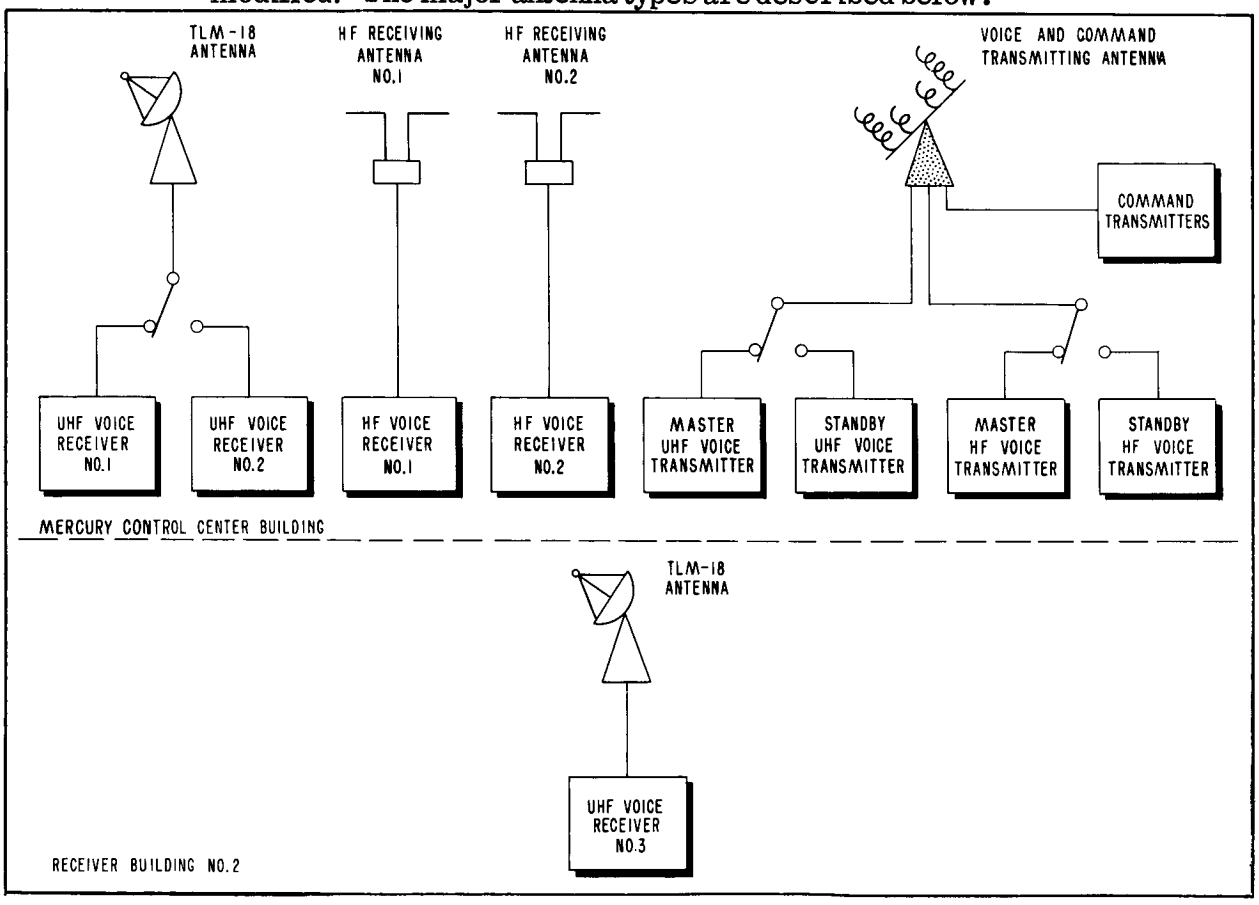

Figure 1-4. Cape Canaveral Antenna Complement

(b). RECEIVING ANTENNA NO. 1. (SEE FIGURE 1-5)

This assembly is used at all sites to feed UHF receiver No. 1. It consists of a UHF right-hand quad-helix array and two HF dipoles, all mounted on a pedestal. Either of two pedestals may be used to

hold receiving antenna No. 1. A modified AN/SCR-584 pedestal is used at sites where this antenna is used in conjunction with the standard acquisition aid system. At Grand Bahama and Grand Turk Islands (which have no automatic acquisition aid systems), Kano, Zanzibar, and Canton Island (which uses a separate acquisition system), and Point Arguello (which uses a separate acquisition antenna), a Canoga No. 8417 pedestal is used with receiving antenna No. 1. Both

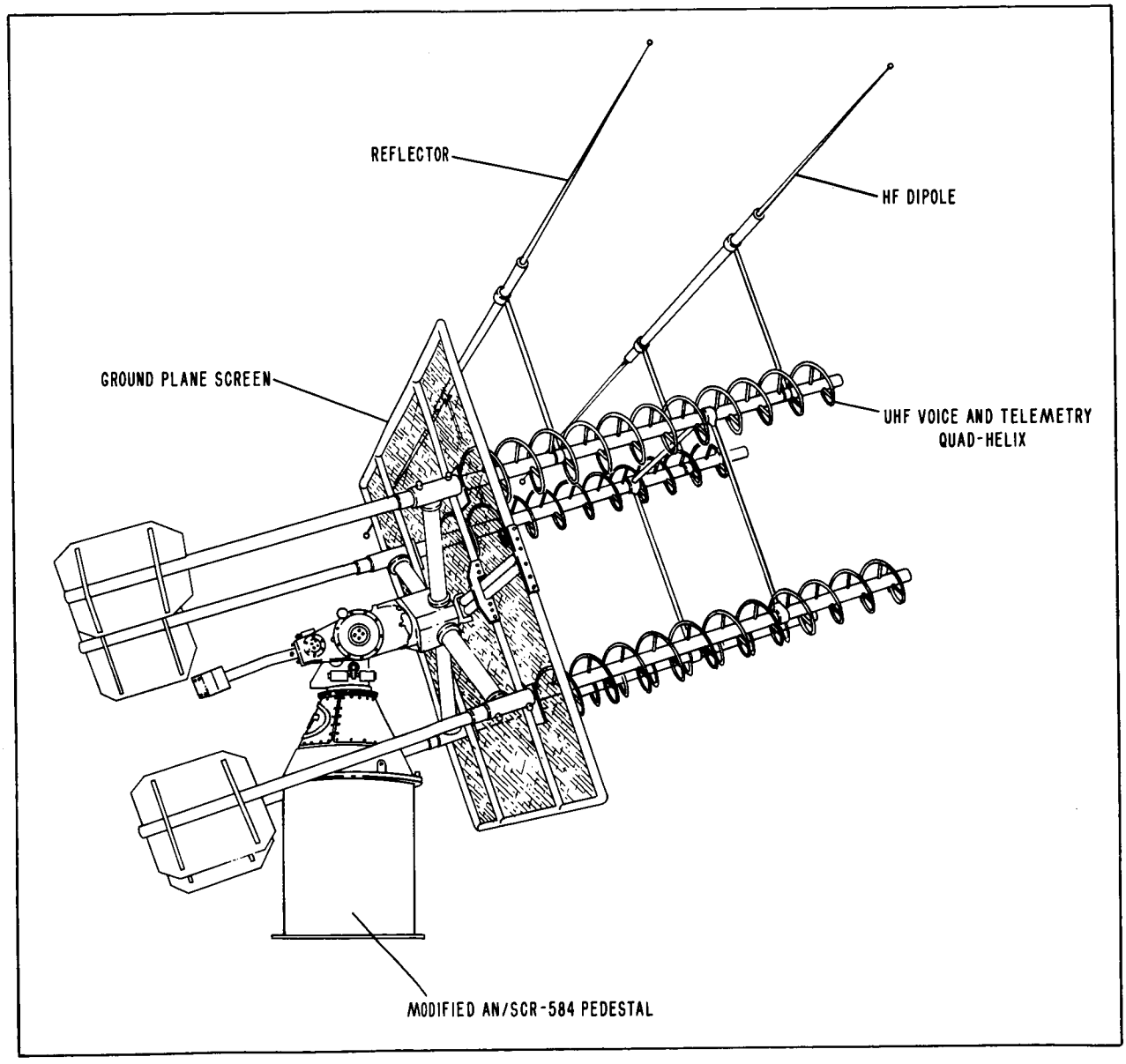

Figure 1-5. Voice Receiving Antenna No. 1

pedestals are steerable and are used to position the antennas in azimuth and elevation. They are energized by means of amplidynes through an antenna control unit and can be slaved to remote synchro data sources (such as the Verlort or AN/FPS-16 radar systems) or positioned locally through use of the handwheels on the control unit. At Grand Bahama and Grand Turk Islands, this receiving antenna is also used in conjunction with UHF receiver No. 2 and HF receiver No. 2. At Bermuda a second antenna array, identical to receiving antenna No. 1, is used by the second acquisition system.

(c). RECEIVING ANTENNA NO. 2. (SEE FIGURE 1-6)

Receiving antenna No. 2 feeds voice communications signals to UHF receiver No. 2 and HF receiver No. 2. It consists of a UHF left-hand quad-helix array and two HF dipoles mounted upon a Canoga No. 8417 pedestal. This array is used at all sites except Grand Bahama and Grand Turk Islands. Aboard the two ships this antenna assembly is shared by the voice transmitter systems.

(d). VOICE TRANSMITTER ANTENNA. (SEE FIGURE 1-6)

The voice transmitter antenna is identical to receiving antenna No. 2. It consists of a left hand UHF quad-helix array and two HF dipoles mounted on a Canoga No. 8417 pedestal. It is used at all sites except the command sites for transmitting voice signals from the master and standby UHF and HF transmitters.

(e). VOICE AND COMMAND TRANSMITTING ANTENNAS. (SEE FIGURE 1-7)

This assembly is used at all command sites for the transmission of voice and command signals. It includes a left-hand UHF quad-helix and two HF dipoles for the voice signals plus a second quad-helis array for the command signals. All three types of antennas are mounted on a common ground plane and are supported by a Canoga No. 8417 pedestal with rotary joint.

(f). SHIPS VOICE TRANSMIT AND RECEIVE ANTENNA. (SEE FIGURE 1-8).

This assembly is used for the Atlantic Ocean and Indian Ocean ships for transmitting and receiving voice signals. It includes both UHF voice

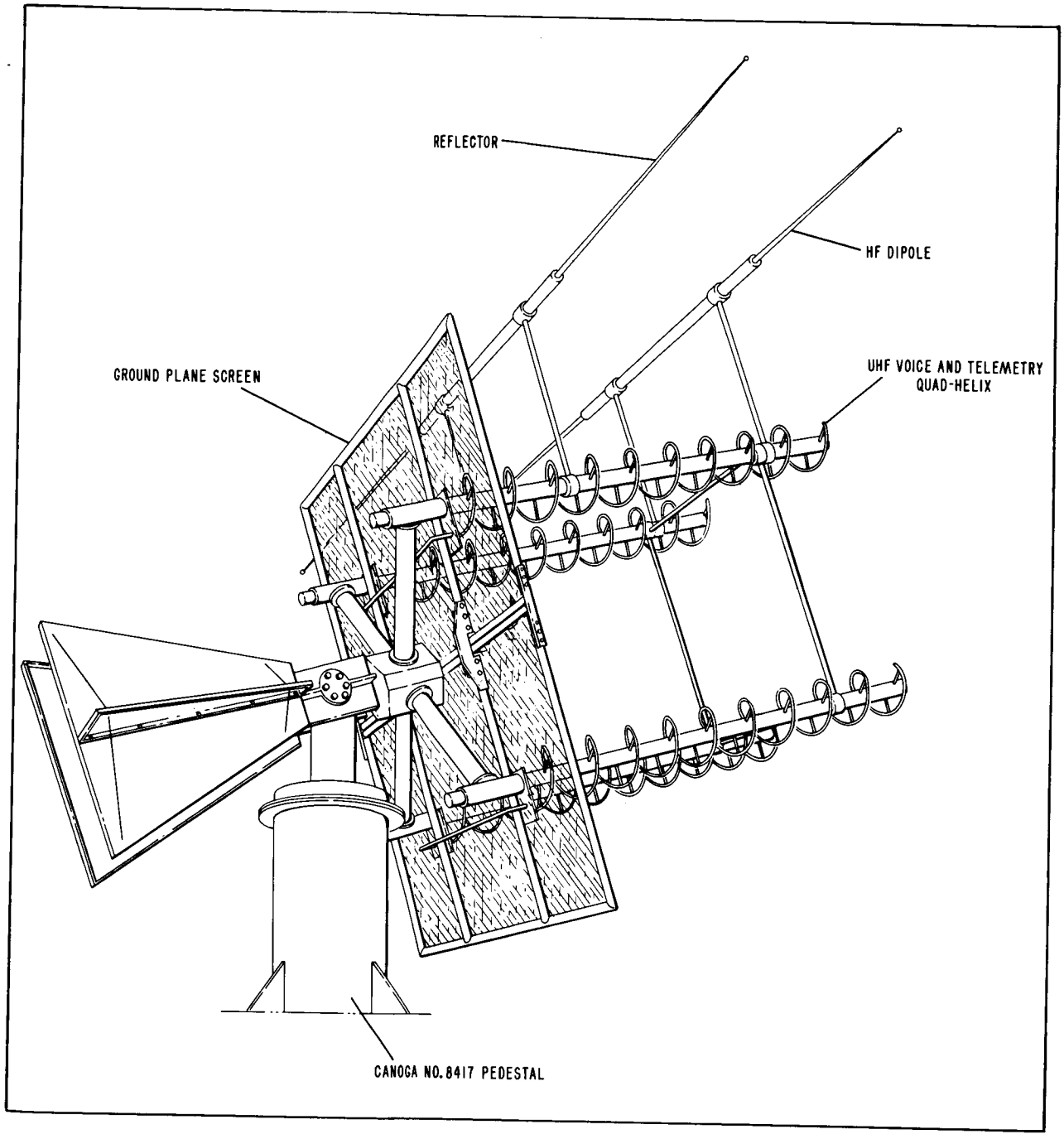

Figure 1-6. Voice Receiving Antenna No. 2 and Voice Transmitting Antenna

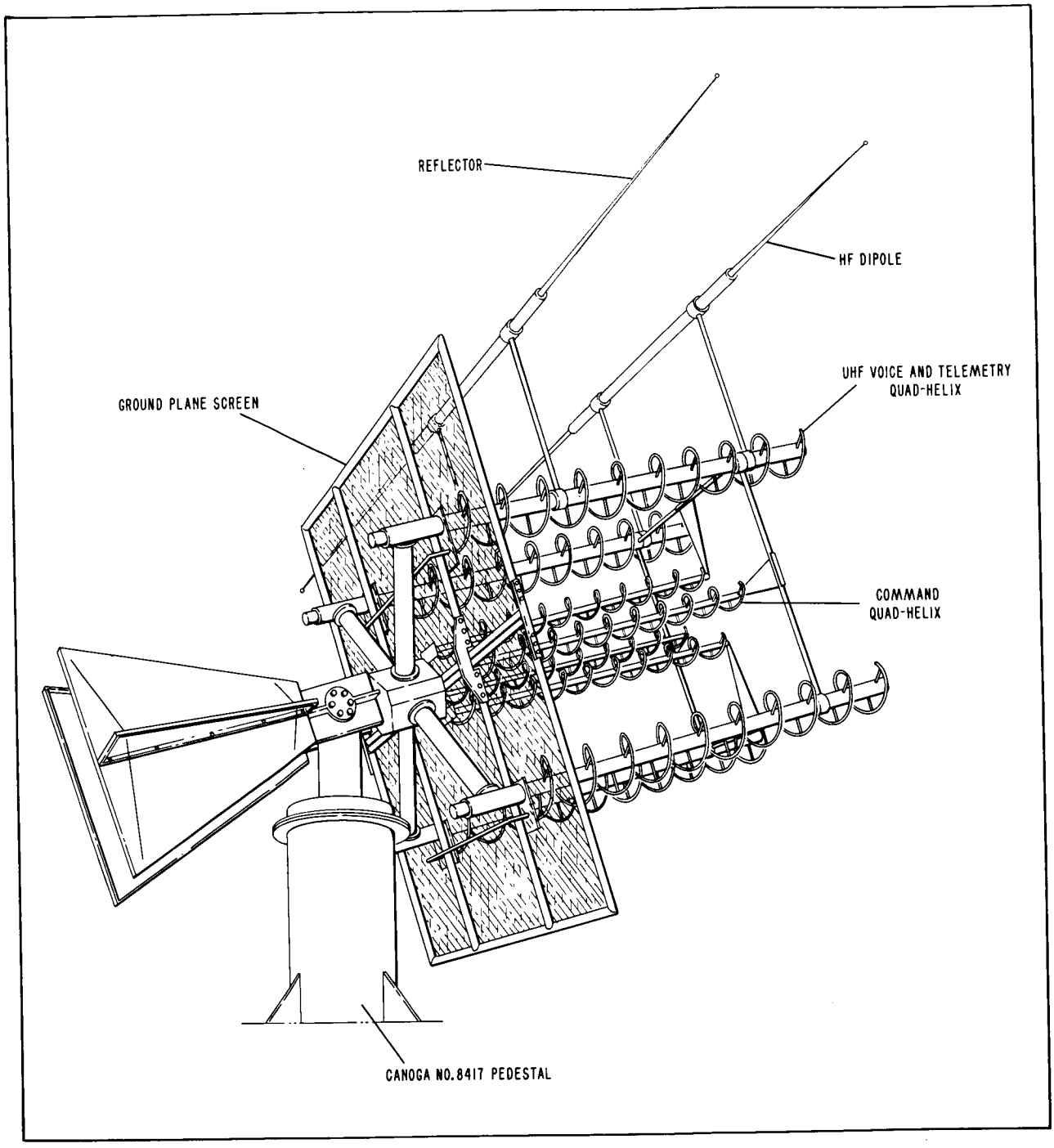

Figure 1-7. Voice and Command Transmitting Antenna

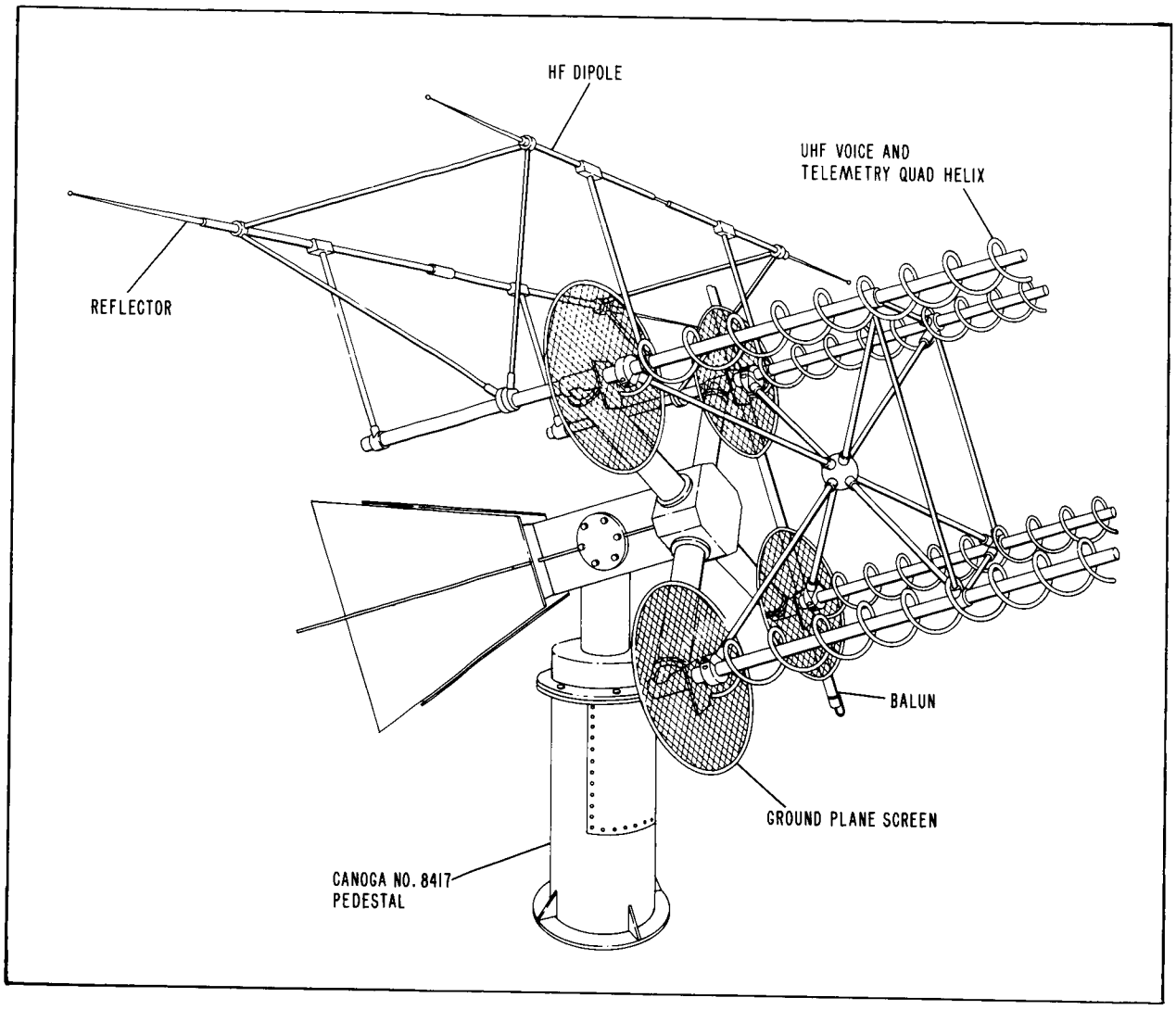

Figure 1-8. Voice Receiving and Transmitting Antenna, Ships

and telemetry quad-helix arrays, HF dipole and reflector and has independently mounted circular ground plane screens. The entire assembly is mounted on a Canoga No. 8417 pedestal.

(g). SHIPS VOICE RECEIVING ANTENNA (SEE FIGURE 1-9)

This assembly is used by both ships for receiving voice signals. It includes both UHF voice and telemetry quad-helix arrays, HF dipole and reflector elements, and has independently mounted circular ground plane screens. This assembly is mounted on a modified AN/SCR-584 pedestal. Both this and the ships-transmit-receive antenna have modified support structure to the UHF and HF antenna elements to allow

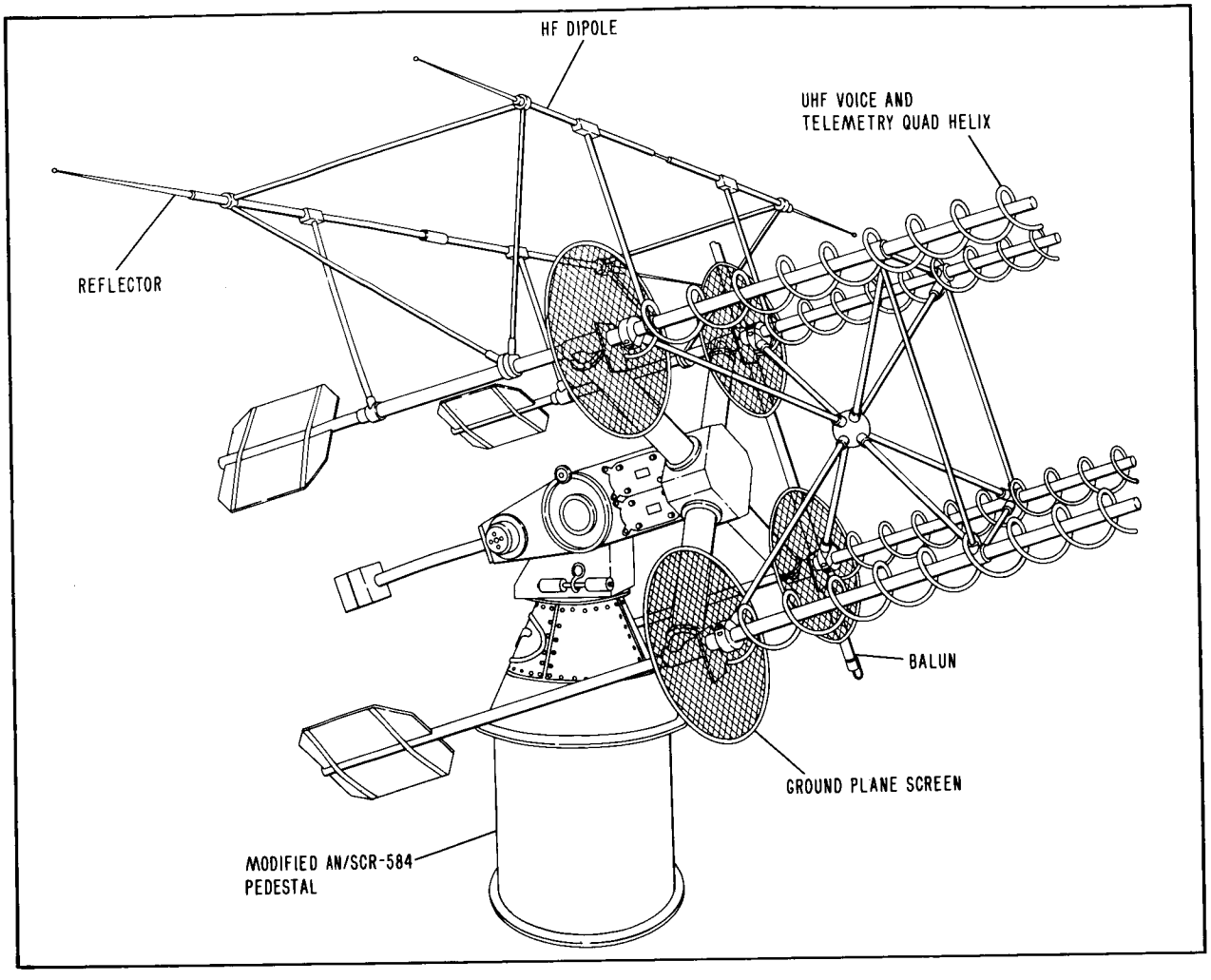

Figure 1-9. Voice Receiving Antenna, Ships

them to better withstand the shocks, vibration and associated mechanical stress of shipboard mounting.

(h). ANTENNA TOWER MOUNTED EQUIPMENT

1. TRIPLEXER (SEE FIGURE 1-10)

A Rantec model MT 395 Antenna Multiplexer is mounted on the tower of each receiving antenna No. 1 and receiving antenna No. 2. It consists of three sets of cavity filters in parallel, all fed from a single input. UHF voice signals are taken from one output, telemetry signals from the other two. The triplexer is described in detail in the Active Acquisition Aid Equipment Manual.

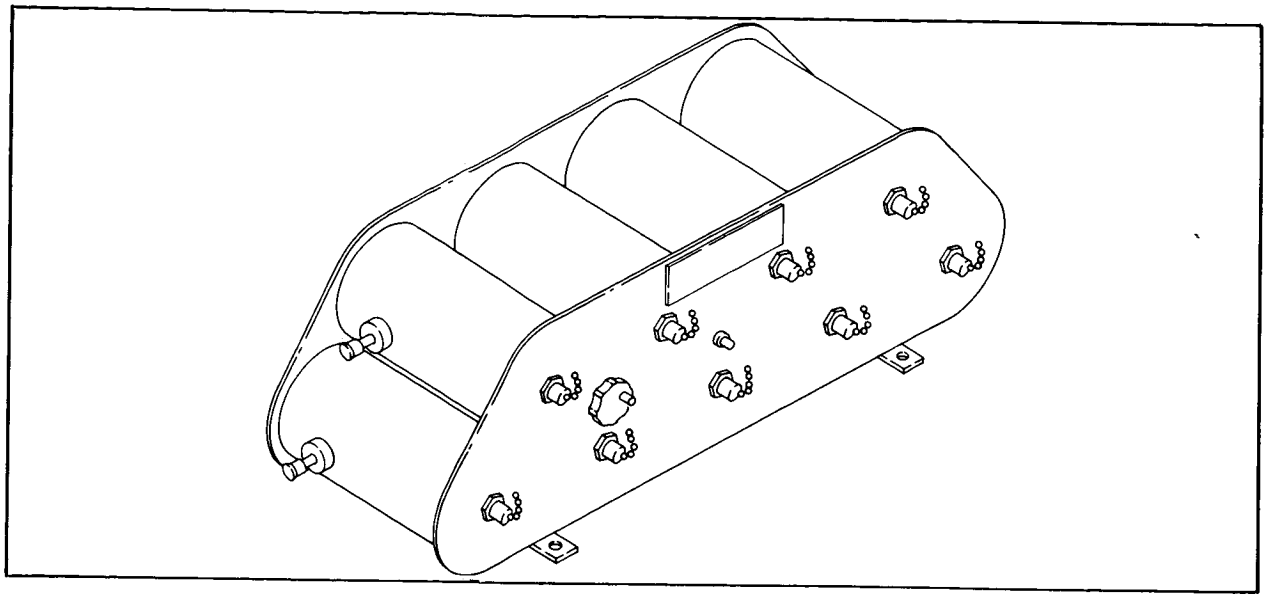

Figure 1-10. Triplexer

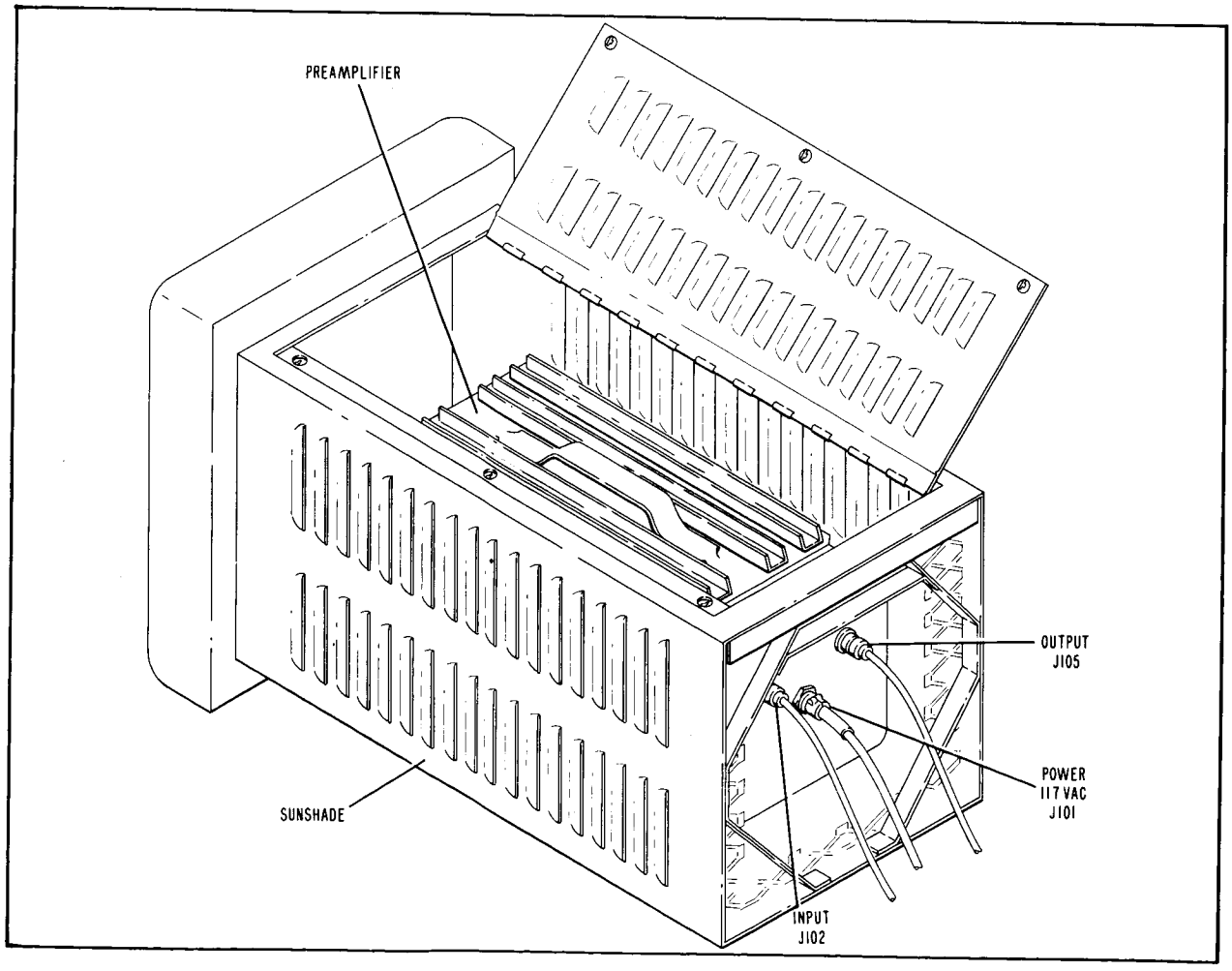

Figure 1-11. Preamplifier

2. PREAMPLIFIER (SEE FIGURE 1-11).

One nems-Clarke Model PR-203S preamplifier is used with each receiving antenna to amplify the UHF voice signals. The unit is in a waterproof housing within a sunshield, which is mounted on the antenna tower below the pedestal. The remote control panel for the preamplifier is in the voice receiver rack. A detailed description of the preamplifier is contained in Instruction Book for Model PR-203 Preamplifier.

(i). SERVO RACK (SEE FIGURE 1-12)

The servo rack holds the servo amplifier panel and control-indicator panel for the Canoga pedestals. At those sites with transmitter vans, the transmitting antenna servo rack is mounted in the van. At the remaining sites the rack is located near the transmitting equipment. The receiving antenna servo racks are located near the acquisition aid equipment.

(2). VOICE RECEIVER RACK

(a). VOICE RECEIVER RACK - STANDARD SITE (SEE FIGURE 1-13)

1. The standard voice receiver rack is made up of two 19-inch Emcor FR-27A equipment racks bolted side-by-side. Dimensions of the double rack are 83.5 inches by 44.6 inches by 23.5 inches (depth).

2. The voice receiver rack holds the following panel-mounted components:

a. The UHF antenna switching unit at a standard site is essentially a patch panel for connecting the UHF antennas to the UHF voice receivers. The panel contains a coaxial relay which is used at sites having one UHF receiving antenna. It connects that antenna to the desired UHF voice receiver

b. A dual-speaker panel for monitoring received voice signals

c. A Bendix model BXR-DDU 100 diversity combiner, for

mixing the outputs of the two UHF voice receivers

d. Two preamplifier power control panels, at which the preamplifiers on the pedestals can be remotely controlled

e. Two military type, Radio Receivers R-278B/GR. Throughout this book these are referred to as UHF voice receiver No. 1 and No. 2. The receivers cover the frequency range from 225.0 to 399.9 megacycles providing 1750 operating frequencies spaced 0.1 mc apart. Ten channels can be pre-selected and the operating channel chosen from these ten remotely at the communication technician's console

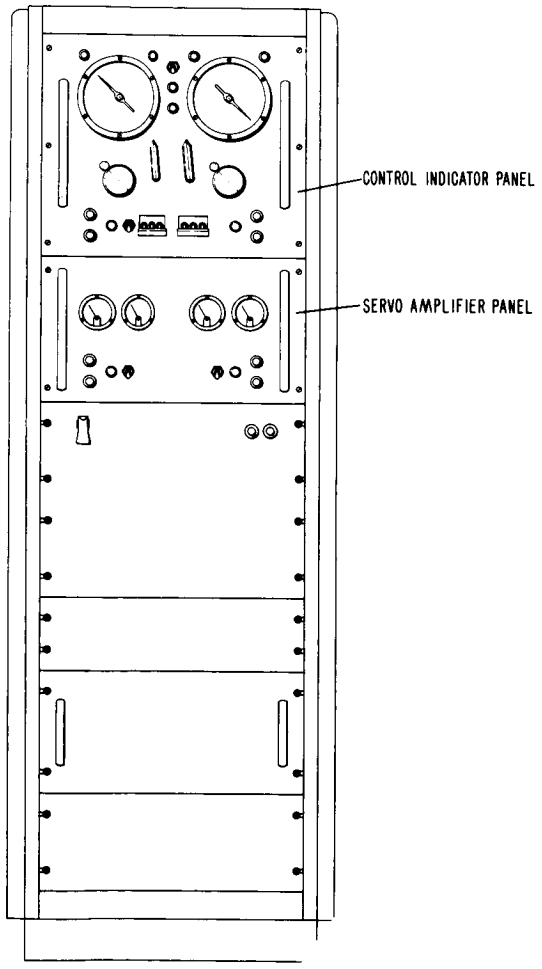

Figure 1-12. Servo Rack

f. A military type, Distribution Panel J-390/GR. Access to the terminal boards and bus bars within this panel is made by lowering the hinged front cover

g. An HF antenna switching unit, which is identical to the UHF antenna switching unit

h. A Bendix model BXR-SG300 HF/UHF Signal Generator. The signal generator can be operated locally or remotely at the communication technician's console

i. An intercommunication panel

j. Two military type Radio Receivers R-390A/URR. These receivers are designated HF receiver No. 1 and No. 2. They are tunable from 0.5 mc to 32 mc

k. A Magnacord Model 728 dual track tape recorder and a recorder playback control panel. The recorder holds 1200 feet of 1.5-mil magnetic tape which provides 30 minutes of recording at 7.5 feet per second

l. HF Bandpass Filters (Ships).

(1). Transmitter Filter (Atlantic Ocean Ship). In the Atlantic Ocean ship the bandpass filter for the transmitting antenna is mounted on the left side of the transmitter rack and the servo rack. The filter is about three feet above the floor. This filter cuts-down the generation of spurious signals

(2). Transmitter Filter (Indian Ocean Ship). In the Indian Ocean Ship the transmitter bandpass filter for the antenna is hung from a bracket attached to the overhead, directly in front and above the transmitter rack.

(3). Receiver Filters. In both the Atlantic Ocean and Indian Ocean ships the bandpass filters are mounted in the voice receiver rack. There are two of these receiver filters in the voice receiver rack; one for the standby

HF receiver and one for the operational receiver.

3. All operating controls for the above components are accessible from the front of the voice receiver rack. A power control panel is mounted inside the rear door behind the UHF antenna switching unit. Power to all components within the voice receiver rack is controlled by the switch on this panel.

WARNING

The rear doors are not equipped with safety-interlocks. Voltages of up to 117 volts are present on some of the terminal boards within the rack.

The input power to the voice receiver rack is not fused within the rack.

Overload protection is furnished by fuses on the individual panels. Four 117-volt AC outlets are provided near the lower rear of the voice receiver rack. The switch on the power control panel does not control these outlets. A fan is mounted on the top of the rack to reduce the ambient temperature within the rack.

(b). VOICE RECEIVER RACK — CAPE CANAVERAL (SEE FIGURE 1-14)

At Cape Canaveral the voice receiving equipment is located in a standard double rack in the Mercury Control Center (Tel. 3 building) and in a single rack at Receiver Building No. 2 (Tel. 2 building). The equipment in the double rack is identical to that at the standard site described above, with two exceptions: there is no diversity combiner and only one preamplifier control panel is installed. The second preamplifier control panel is contained in the single rack at Receiver Building No. 2 along with an HF/UHF signal generator, a dual speaker panel, UHF voice receiver No. 3, a distribution panel, and a special intercommunications panel. Power to this equipment is controlled at the power control panel at the rear of the cabinet.

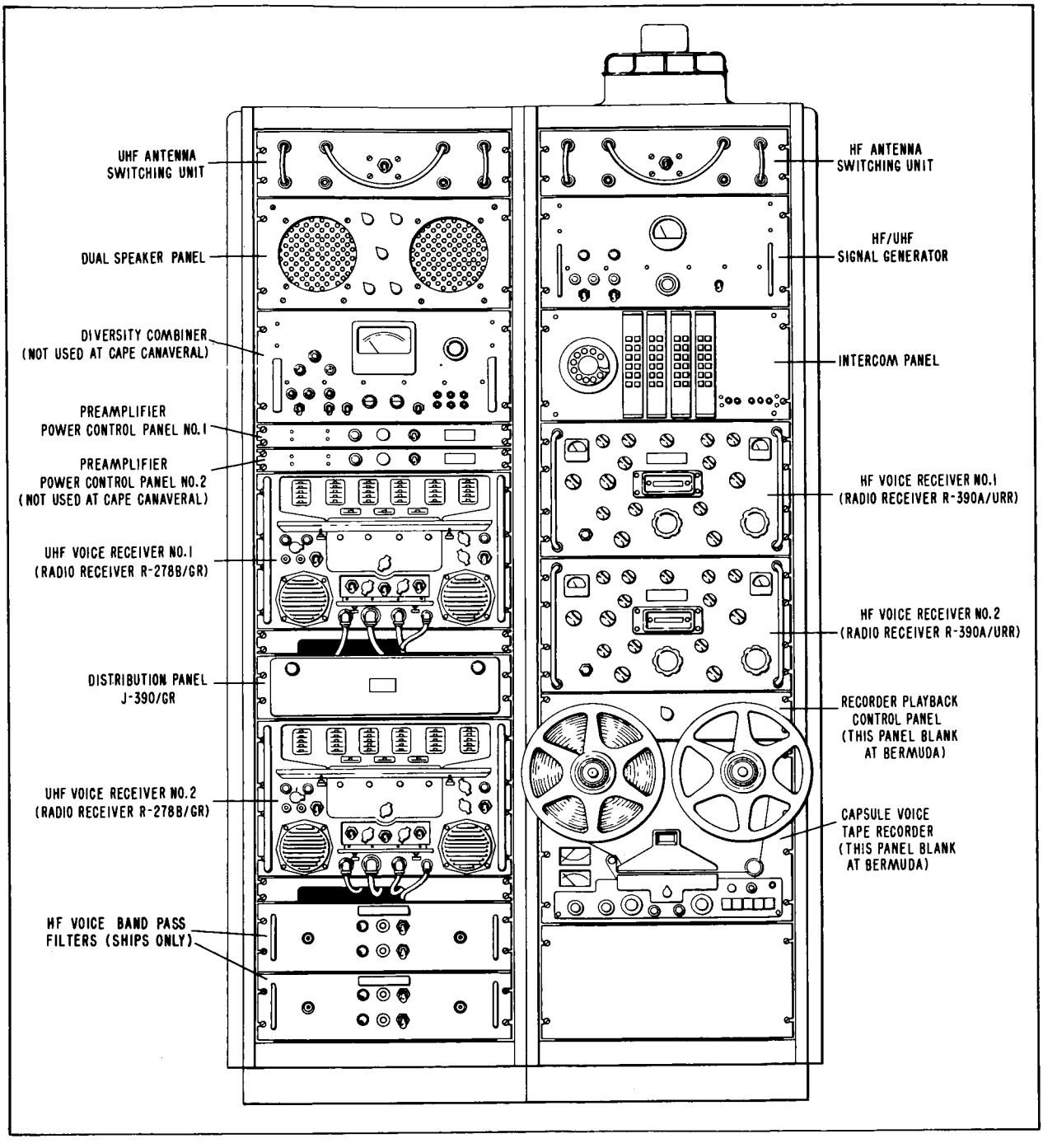

Figure 1-13. Voice Receiver Rack, Typical

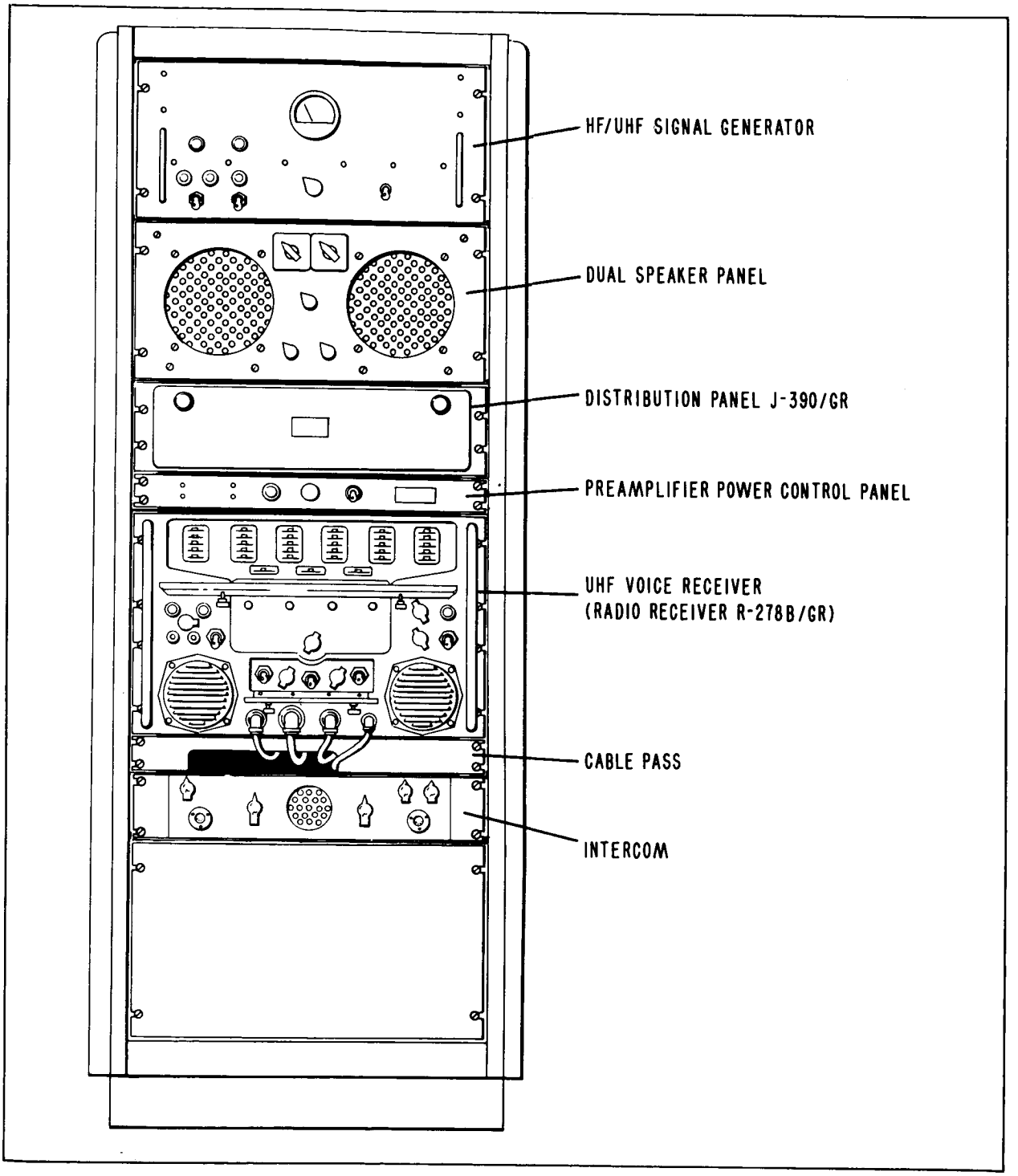

Figure 1-14. Voice Receiver Rack, Cape Canaveral, Receiver Building No. 2

(c). VOICE RECEIVER RACK — BERMUDA

The equipment in the Bermuda voice receiver rack is identical to that at a standard site except that a dual track tape recorder is not included. At Bermuda the dual track tape recorder is housed in the terminal equipment rack.

(d). VOICE RECEIVER RACK — GRAND BAHAMA ISLAND AND GRAND TURK ISLAND (SEE FIGURE 1-15)

Because the down range sites are equipped with only one receiving antenna array, only one preamplifier control panel is required in the voice receiver rack. Two UHF voice receivers are supplied, but these are used in a master-standby capacity, so the diversity combiner is not required or supplied. The sites are not equipped with dual track tape recorders. A special intercommunications panel is used in lieu of the standard intercommunications panel. The remainder of the voice receiver rack equipment is identical to that at a standard site.

(3). TRANSMITTER VAN

(a). Ten sites are supplied with a four-wheel trailer van which houses the voice transmitting equipment. Outside dimensions of the van are 14 feet (length) by 8 feet (width) by 8-1/2 feet (height). Overall height of the van when mounted on the trailer wheels is about 10-1/2 feet. The van body is constructed of a light-gauge, tubular steel, framework paneled with aluminum-covered plywood. The interior of the van is lined with 3/8-inch plywood. Combined weight of the empty van and trailer undercarriage is 5530 pounds. It is designed to carry a maximum payload of 6200 pounds. The van can be removed from the trailer undercarriage by lifting jacks supplied for this purpose. Each van carries its own air conditioner and water cooler. A sub-ceiling area of 6 inches is provided for the purpose of air circulation from the air conditioner. Perforated holes in the ceiling panels permit air distribution throughout the van. This area is also used as a duct for wiring circuits. The side entrance door of the van is provided with an escape latch to allow exit from the trailer if the padlock is accidentally locked from the outside. By turning the

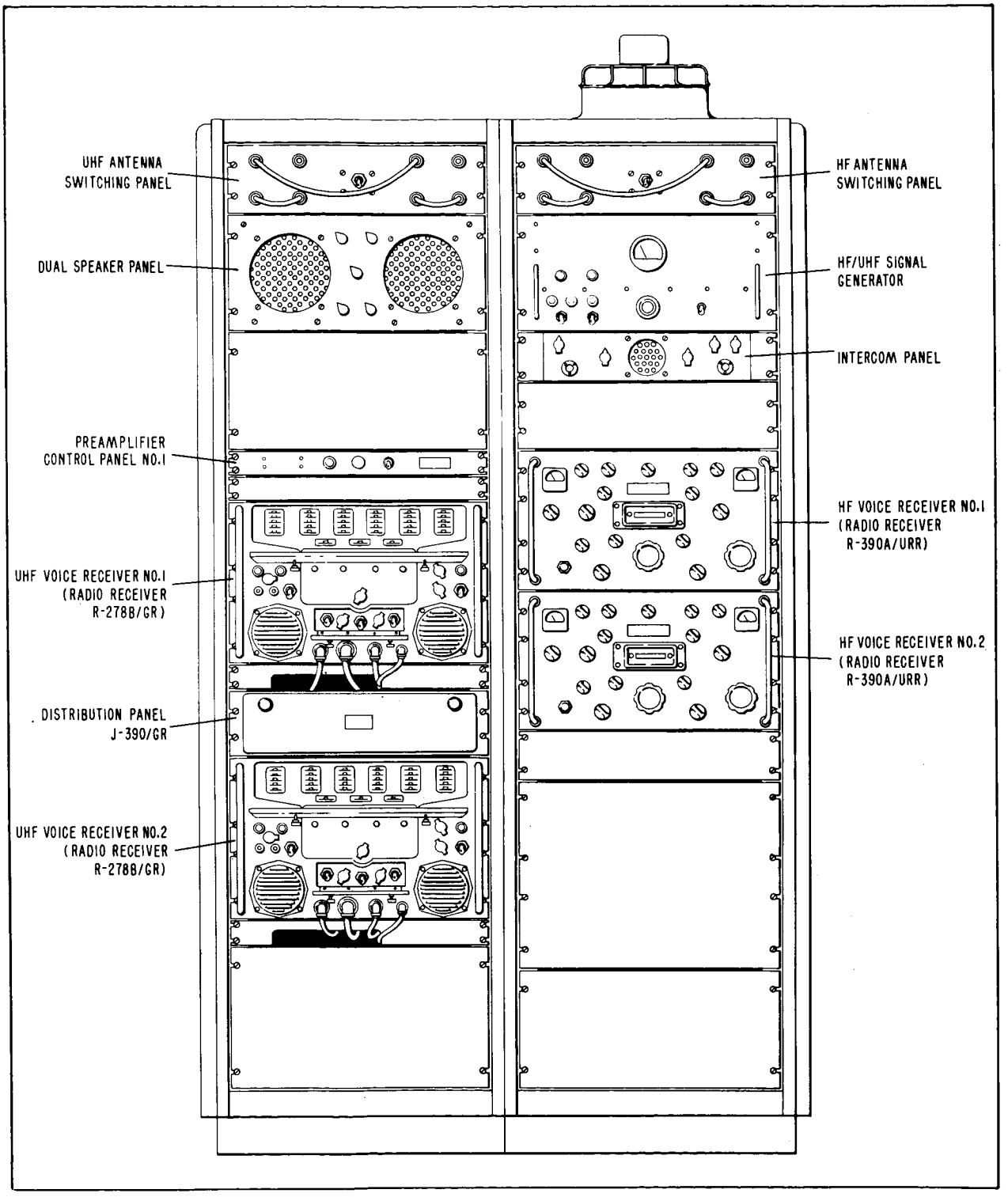

Figure 1-15. Voice Receiver Rack, G.B.I. and G.T.I.

slotted screws to the left with a screw driver or coin the latch and padlock will come loose from the door.

(b). The standard arrangement of equipment within a van is shown in figure 1-16. Major equipment consists of the UHF voice transmitter rack, one HF voice transmitter, one HF monitor rack, the servo rack, and the air conditioning unit. This equipment arrangement is used at Kano, Zanzibar, Canton Island, Corpus Christi, and Woomera. The van at Kauai (see figure 1-17) also contains a terminal equipment rack for the command control transmitting system. The vans at Muchea and Guaymas (see figure 1-18) house, in addition, two command transmitters and a terminal equipment rack. The van at Cape Canaveral (see figure 1-19) is similar to the standard van, but contains an additional HF voice transmitter, a synchro-remoting transmitter-receiver, and an interphone rack. The Grand Canary Island van (see figure 1-20) contains the recovery team transmitter and the recovery team console.

(4). UHF TRANSMITTER RACK (SEE FIGURE 1-21)

(a). The trailer-mounted UHF transmitter rack is an Emcor 19-inch equipment rack. Its dimensions are 68.4 inches by 23.5 inches by 23.0 inches. The UHF transmitter racks located in buildings and aboard ships are 26.5 inches in depth. The UHF transmitter rack contains the following equipment:

1. One M.C. Jones Model SG-41.2 power modulation monitor

2. Two Radio Transmitting Sets AN/GRT-3. These are referred to throughout this manual as the master UHF voice transmitter and the standby UHF voice transmitter. Each transmitter comprises a Radio Transmitter T-282/GR and a Modulator-Power Supply MD-141A/GR. The transmitter is a single-channel, crystal-controlled set, tunable from 225.0 megacycles to 339.9 megacycles. Power output is 100 watts

3. One Adams-Russell Co. Model 700 low-pass filter and one M.C. Jones Type 636N dummy load. These components are mounted on top of the transmitter rack

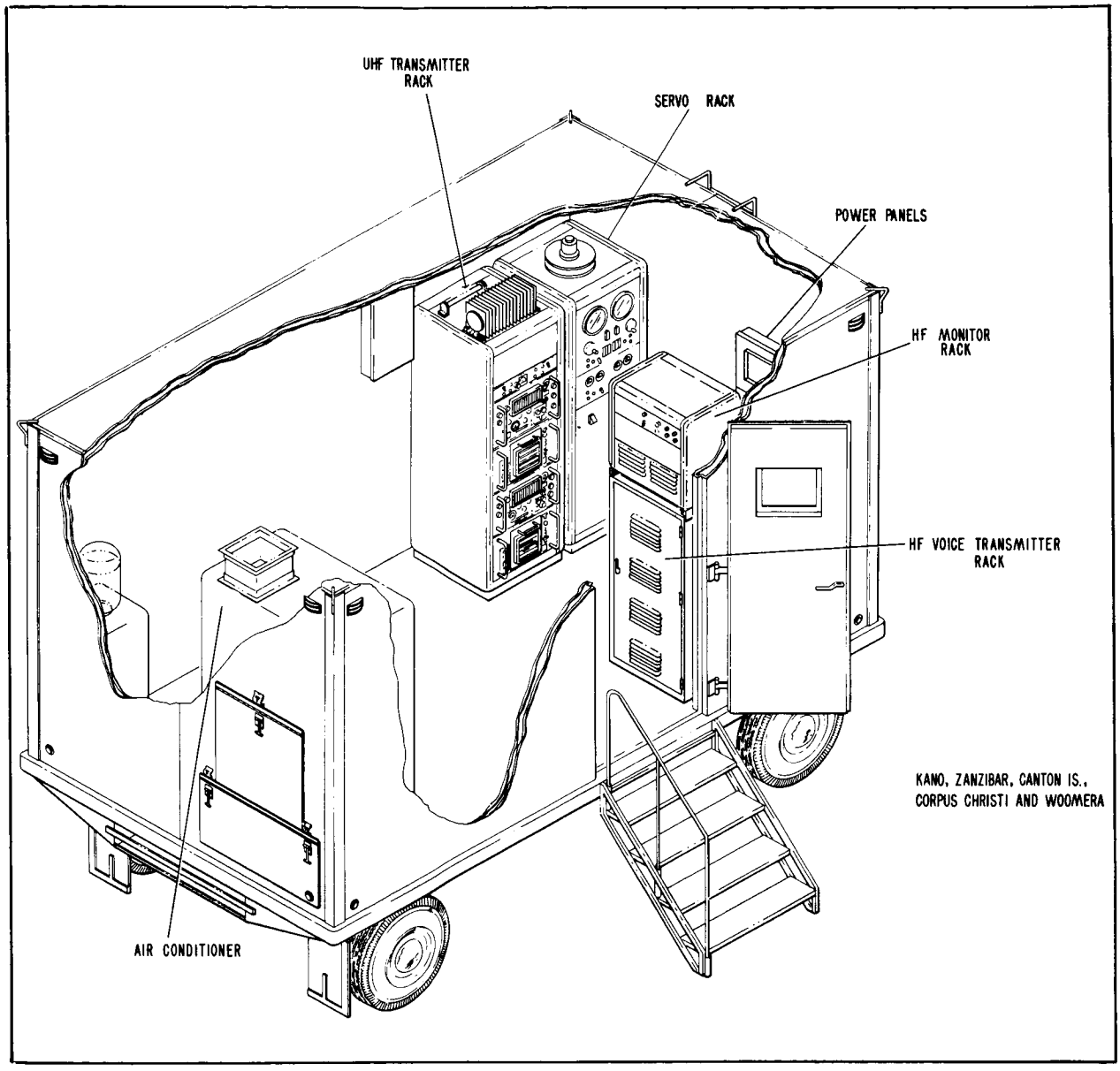

Figure 1-16. Transmitter Van, Typical Site

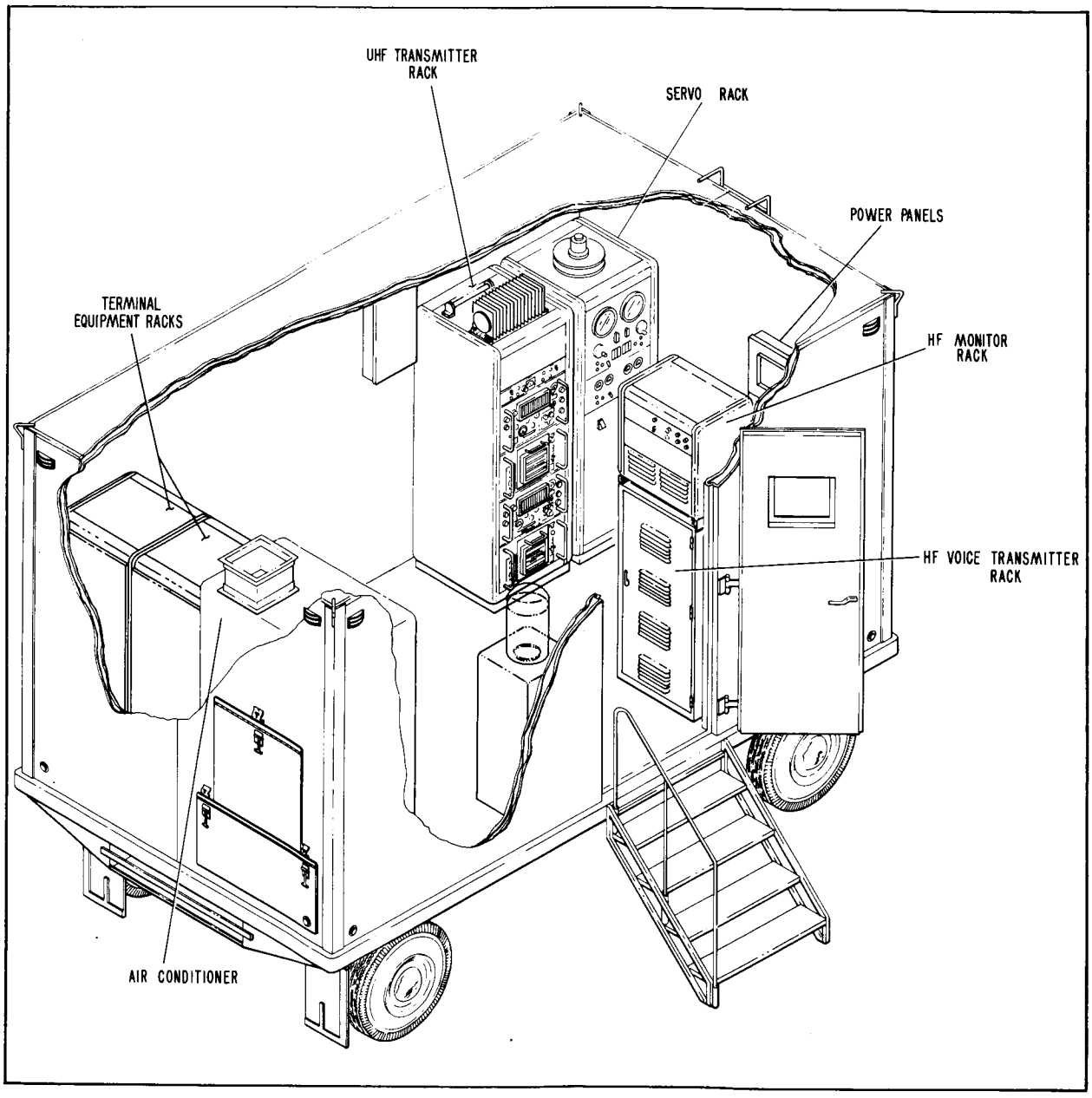

Figure 1-17. Transmitter Van, Kauai Island, Hawaii

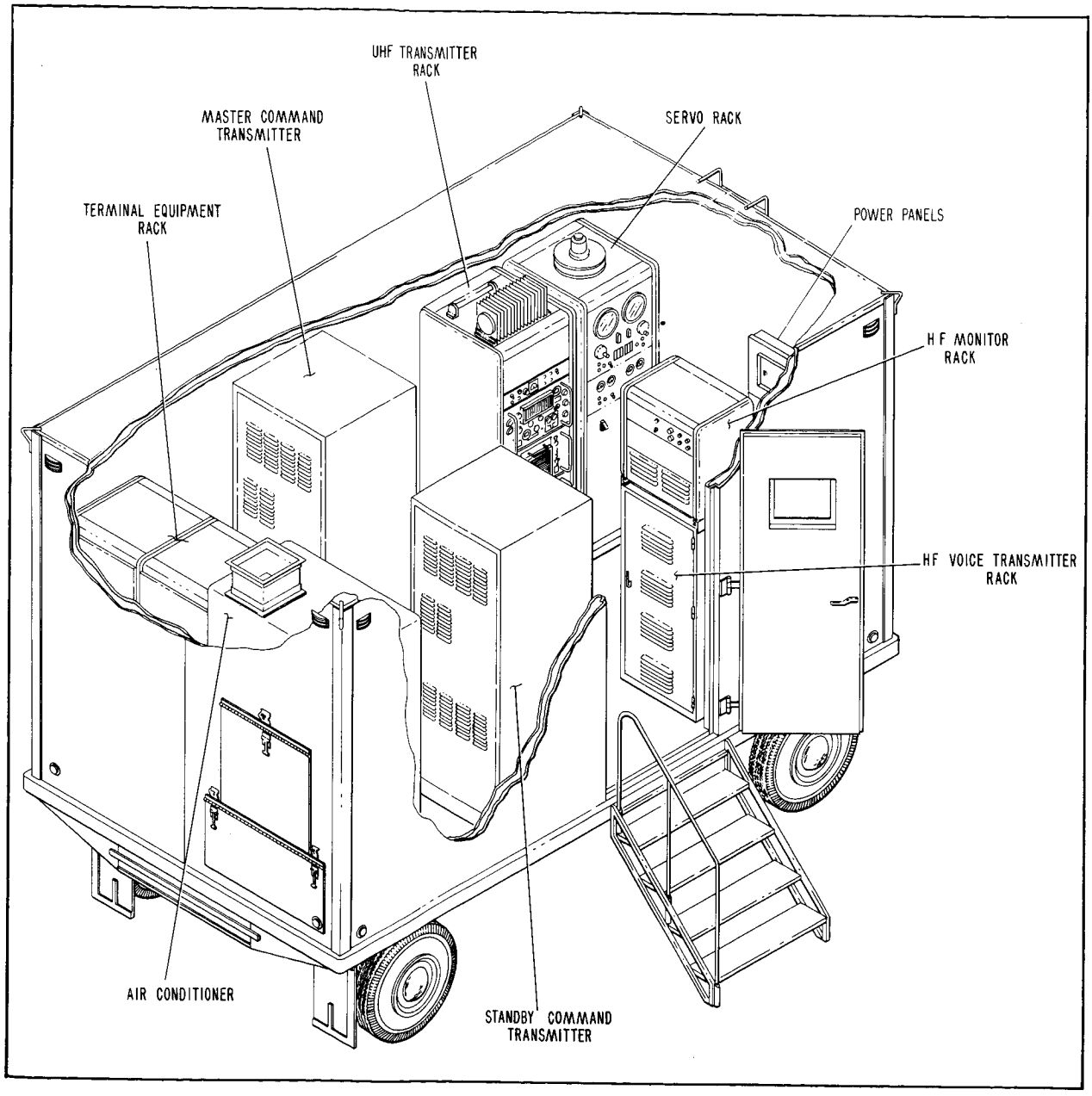

Figure 1-18. Transmitter Van, Muchea and Guaymas

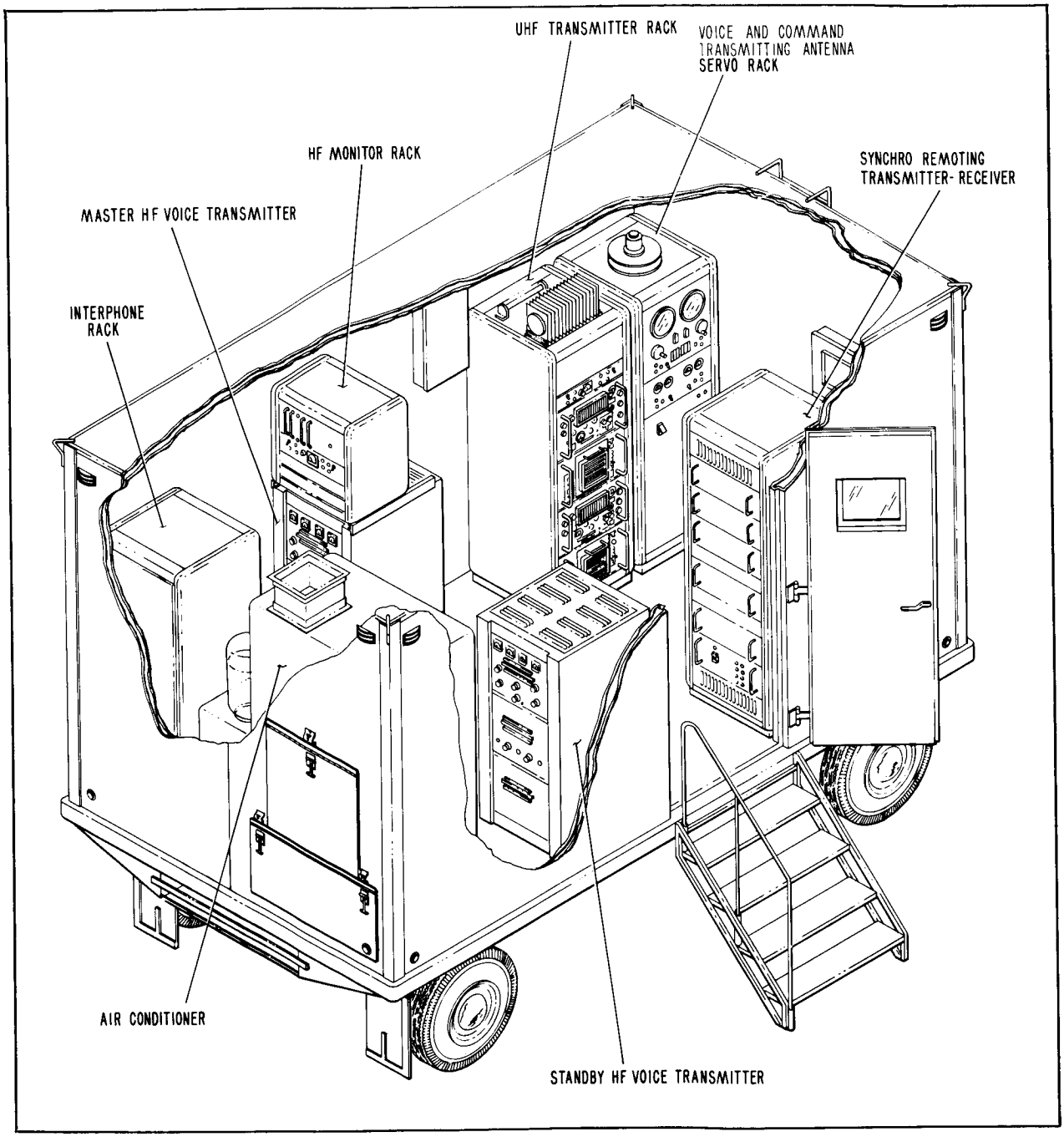

Figure 1-19. Transmitter Van, Cape Canaveral

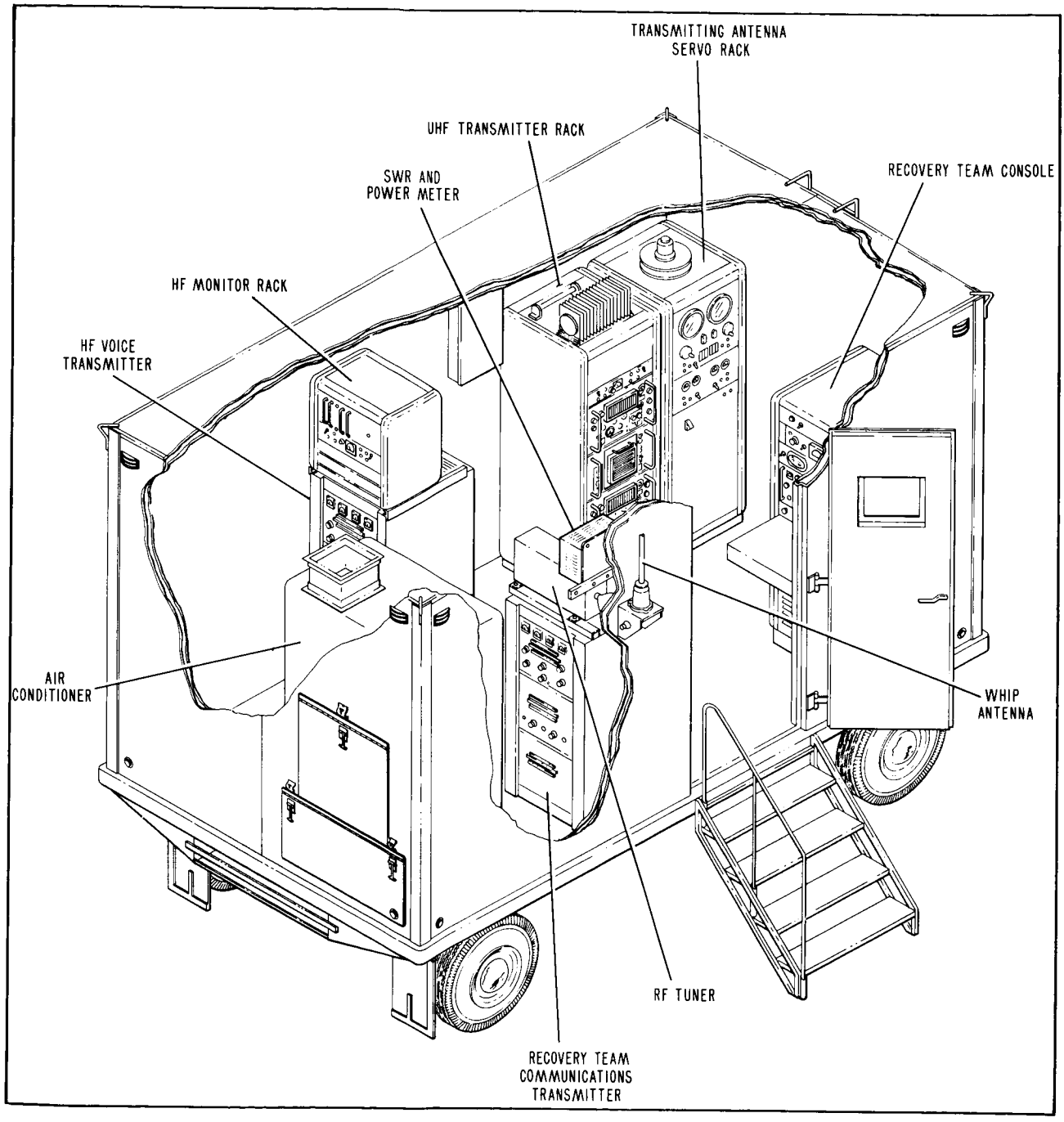

Figure 1-20. Transmitter Van, Grand Canary Island

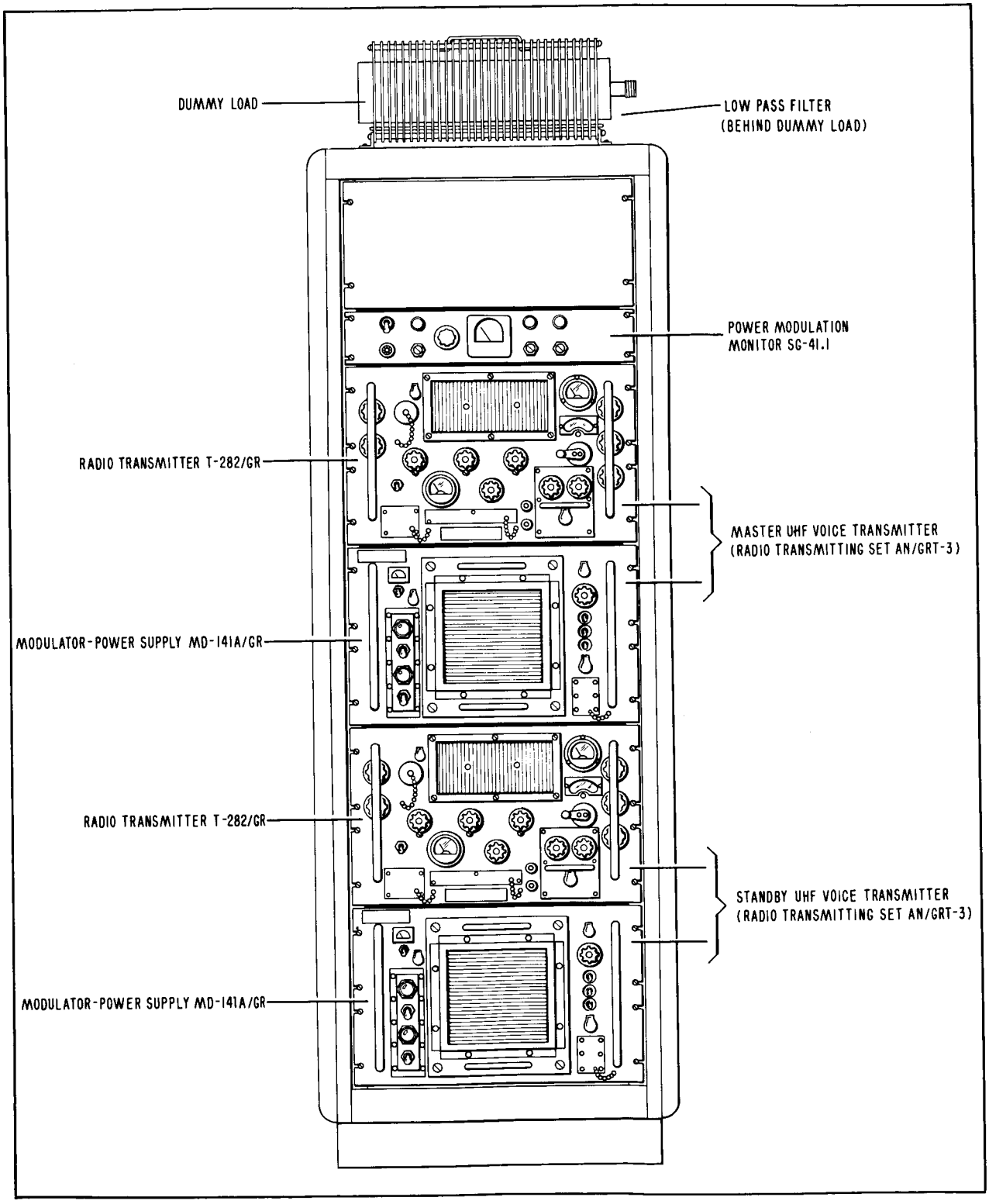

Figure 1-21. UHF Transmitter Rack

4. Two Adams-Russell Co. Model 310 UHF cavity filters. The filters are mounted inside the rack, hanging from the top panel of the UHF transmitter rack. The cavity filter is approximately cylindrical, 9.2 inches in height and 9.5 inches in diameter at the base. The air-tight access cover must be removed for tuning the cavity. The cavity contains an internal silica gel reservoir to keep humidity from affecting the reliability of the filter. Input and output connectors are type N.

(5). HF VOICE TRANSMITTER (SEE FIGURE 1-22).

(a). The HF voice transmitter is a Gates Radio Co. Model CS2029 transmitter, capable of transmitting double-sideband, amplitude-modulated, voice signals in the frequency range of 14 to 26 megacycles at a rated power of 250 watts and from 26 to 32 megacycles at 225 watts. This transmitter is crystal-controlled and has two preset channels which can be remotely selected from the communication technician's console. Basic elements of the transmitter are self-contained in a cabinet. The center panel on the front of the HF voice transmitter cabinet has test jacks and clipping level adjustment controls for control of voice transmission.

(b). Two HF transmitters, master and stand by, are provided at Cape Canaveral, Grand Turk Island, and Bermuda. Only one HF transmitter is provided at each of the other sites. Dimensions of the cabinet are 50 inches by 23 inches by 26 inches.

(6). HF MONITOR RACK (SEE FIGURE 1-23)

(a). The HF monitor rack is an Emcor Model FR-47A, 19-inch equipment rack, 23.5 inches by 23.3 inches by 16.3 inches. It is mounted on top of the HF transmitter and contains the following equipment.

1. One patch panel. This panel holds the coaxial connectors used for various patching arrangements between the HF voice transmitter bidirectional coupler, antennas, and the dummy load. The front of the coaxial jacks mate with quick-disconnect

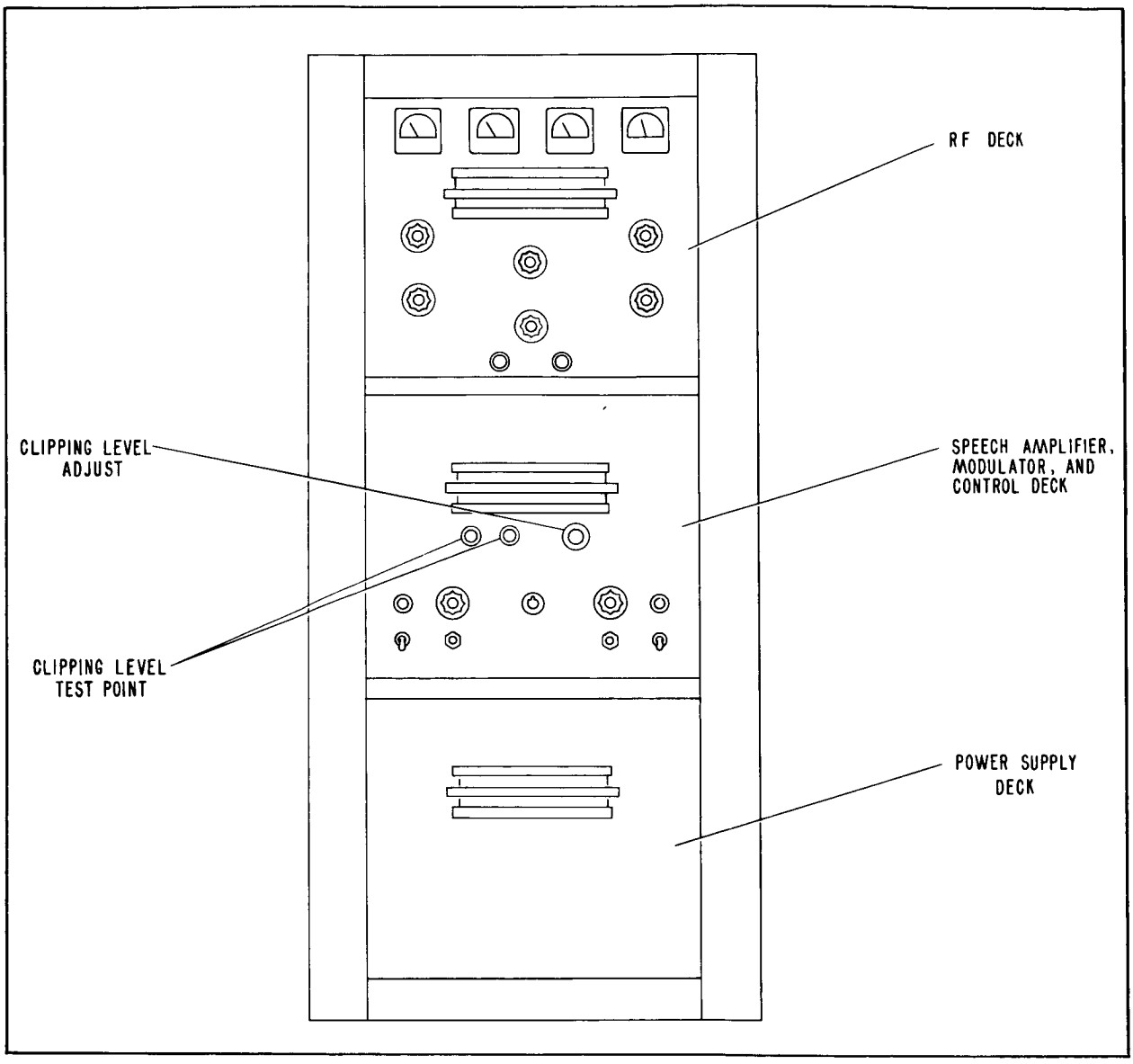

Figure 1-22. HF Transmitter Cabinet

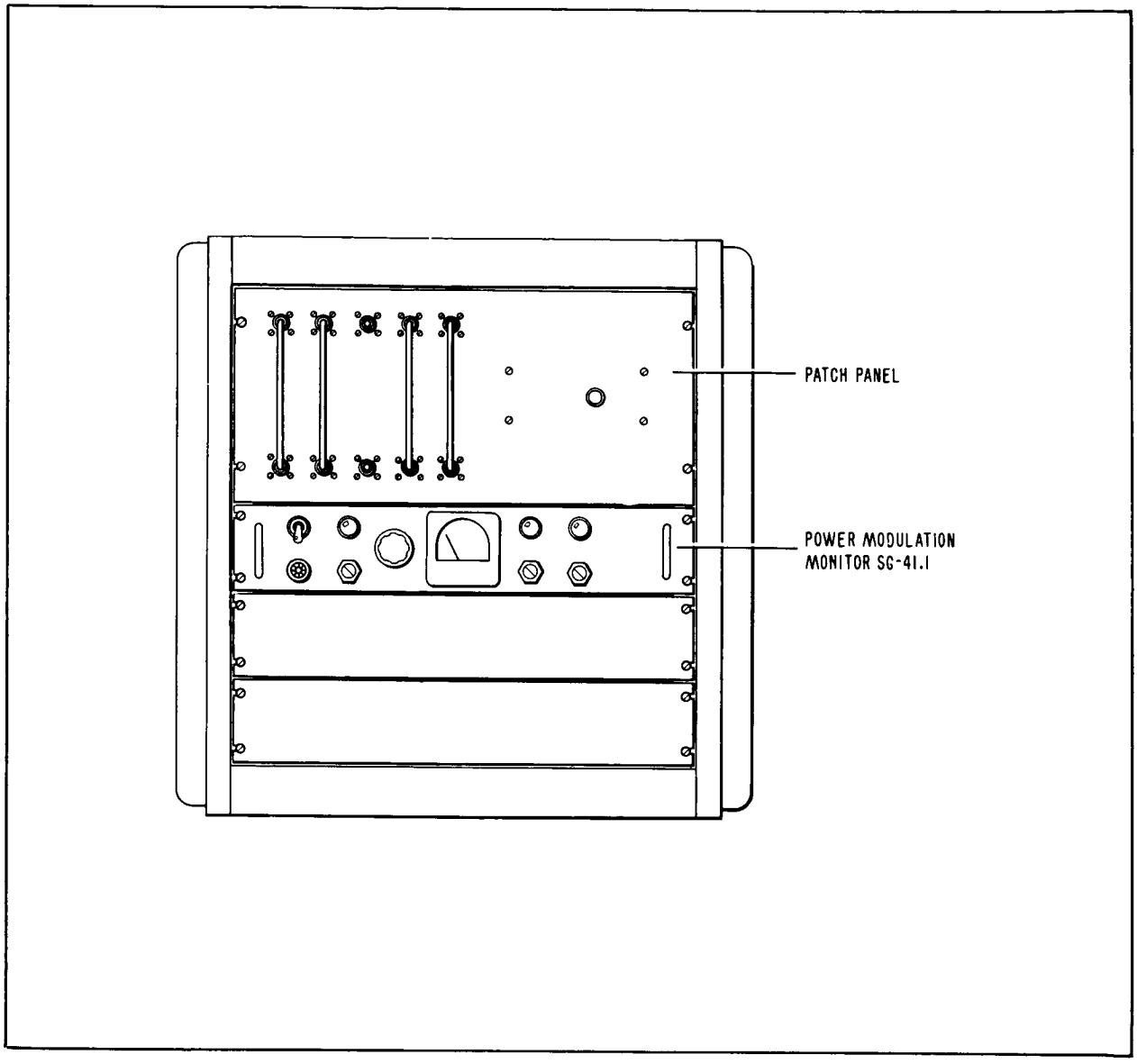

Figure 1-23. HF Monitor Rack

fittings on the patching cables; the backs are type-N coaxial fittings that connect to the cabinet cabling.

2. One M.C. Jones Model SG-41.1 power modulation monitor. This model is similar to the SG-41.2 used in the UHF transmitter rack, but the SG-41.2 includes de-sensitizing relays which permit full-scale modulation readings to be made with less than 200-watts power output.

3. One M.C. Jones Model 263-14 bidirectional coupler. This is located behind the power modulation monitor and is accessible from the rear of the cabinet.

4. One Transco Type "Y", No. 11800 coaxial switch, and one M.C. Jones Type 636N14 dummy load. These items are mounted on the interior of the cabinet and are accessible from the rear.

5. One HF Voice transmitter sidetone amplifier. This is a Bendix Radio Model BXR-LA 200.

(7). TERMINAL EQUIPMENT RACK (SEE FIGURE 1-24).

(a). At Kauai, the transmitter van contains the double rack terminal equipment rack. In the capsule communications system only the tape recorder is used.

(8). RECOVERY TEAM EQUIPMENT (GRAND CANARY ISLAND ONLY).

(a). The transmitter van at Grand Canary Island is supplied with two pieces of equipment which are closely associated with the capsule communications system although not actually a part of it. These are the recovery team transmitter and the recovery team console. This equipment serves as a communications center for contact with the Navy capsule-recovery team. It provides facilities for CW, MCW, and voice communications in the 2- to 26-megacycle frequency range.

(b). The recovery team console (see figure 1-25) consists of an Emcor 19-inch equipment rack housing the following units:

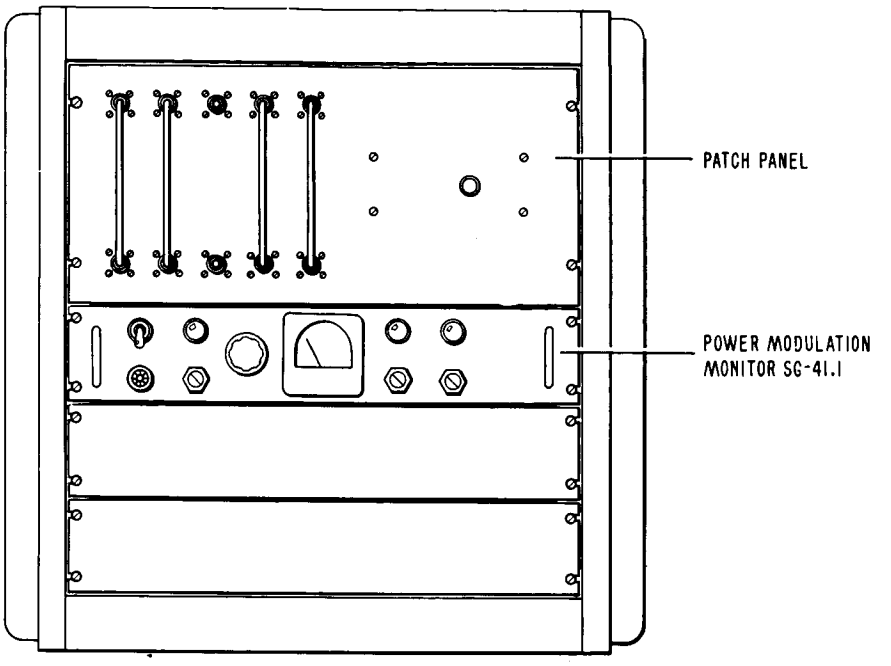

Figure 1-23. HF Monitor Rack

fittings on the patching cables; the backs are type-N coaxial fittings that connect to the cabinet cabling.

2. One M.C. Jones Model SG-41.1 power modulation monitor. This model is similar to the SG-41.2 used in the UHF transmitter rack, but the SG-41.2 includes de-sensitizing relays which permit full-scale modulation readings to be made with less than 200-watts power output.

3. One M.C. Jones Model 263-14 bidirectional coupler. This is located behind the power modulation monitor and is accessible from the rear of the cabinet.

4. One Transco Type "Y", No. 11800 coaxial switch, and one M.C. Jones Type 636N14 dummy load. These items are mounted on the interior of the cabinet and are accessible from the rear.

5. One HF Voice transmitter sidetone amplifier. This is a Bendix Radio Model BXR-LA 200.

(7). TERMINAL EQUIPMENT RACK (SEE FIGURE 1-24).

(a). At Bermuda, the terminal equipment rack contains the dual track tape recorder. This recorder is the only unit in the rack that is employed in the capsule communications system.

(8). RECOVERY TEAM EQUIPMENT (GRAND CANARY ISLAND ONLY).

(a). The transmitter van at Grand Canary Island is supplied with two pieces of equipment which are closely associated with the capsule communications system although not actually a part of it. These are the recovery team transmitter and the recovery team console. This equipment serves as a communications center for contact with the Navy capsule-recovery team. It provides facilities for CW, MCW, and voice communications in the 2- to 26-megacycle frequency range.

(b). The recovery team console (see figure 1-25) consists of an Emcor 19-inch equipment rack housing the following units:

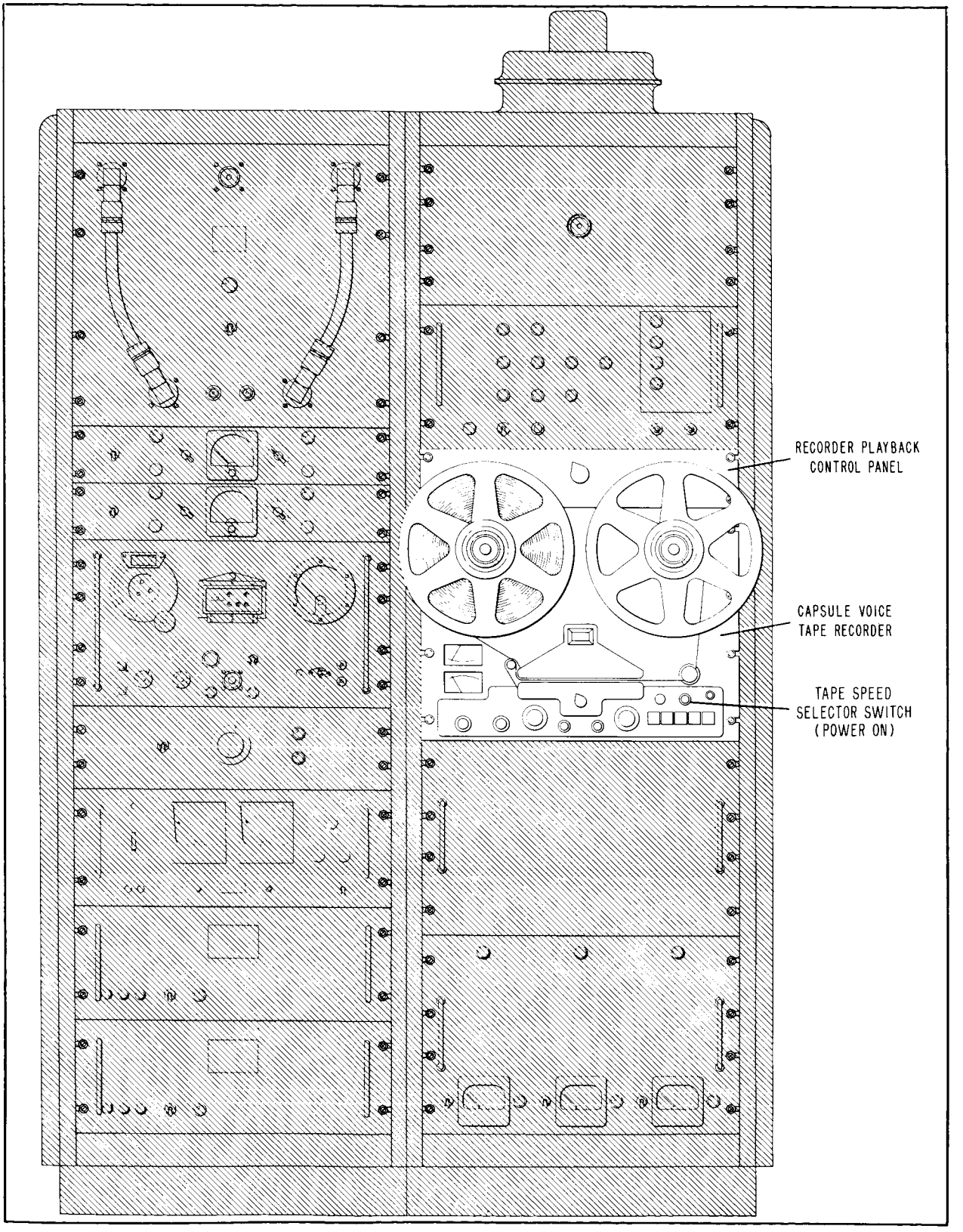

Figure 1-24. Terminal Equipment Rack, Bermuda

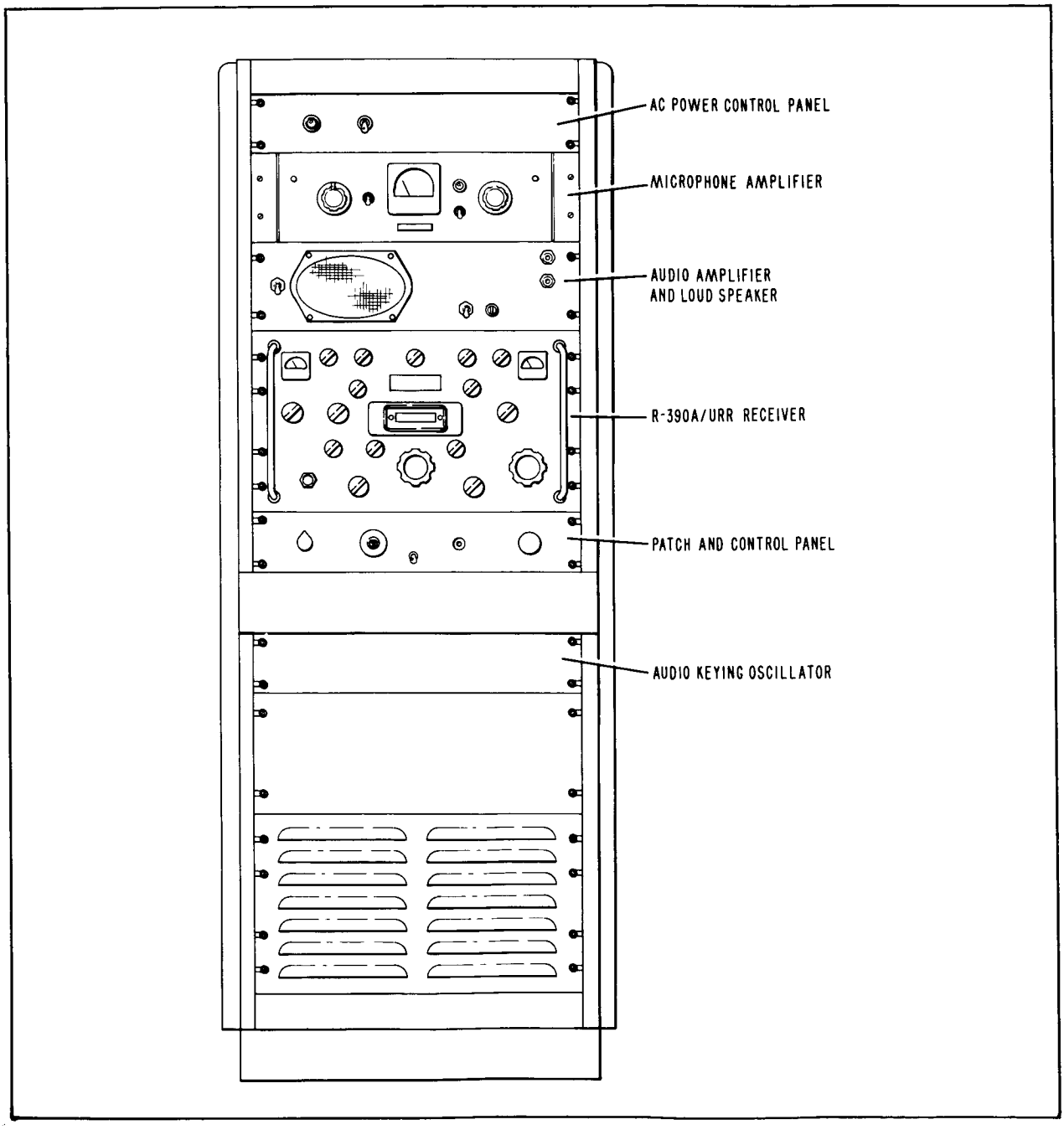

Figure 1-25. Recovery Team Console

1. One R-390/GR receiver. This receiver is identical to the two receivers housed in the voice receiver rack and used with the HF voice receiving system

2. One Cubic Type 18598-1 audio amplifier and loud speaker panel. This unit is a modified version of that used with the acquisition system. The volume control for the amplifier is located on the patch panel. Headphone jacks are provided on the amplifier panel

3. One patch panel. This contains the AM-CW-MCW selector switch, the microphone jack, the telegraph key jack, and the monitor volume control

4. One Gates Model M-5167 Sta-level Amplifier used as a microphone preamplifier. This unit is identical to the microphone preamplifier located in the communication technician's console and used with the HF voice transmitter

5. One Bendix Radio BXR-MCO-400A Audio Keying Oscillator. This is located below the console writing shelf. A cover panel must be removed to make its controls accessible. The oscillator is similar to that located in the communication technician's console and used as emergency back-up equipment with the voice receiving system

6. One a-c power control panel. This panel contains the main power switch and circuit breaker for the console.

(c). The recovery team transmitter is a Gates CS-2199 Transmitter which is similar to the Gates CS-2029 Transmitter used for HF voice transmitting with the capsule communications system. The transmitter is single channel and crystal controlled.

(9). <u>COMMUNICATION TECHNICIAN'S CONSOLE (SEE FIGURE 1-26)</u>

(a). The communication technician's console is a Bendix Radio Model BXR CTC-500. The basic console consists of two standard Emcor FR-25A equipment racks bolted together, with a writing surface affixed to the front of the assembly. Panel controls and

indicators are located above this writing surface to provide remote control and monitoring of the capsule communications system. Dimensions of the cabinet are 59.6 inches by 44.6 inches by 41.5 inches.

(b). The configuration of the console varies from site-to-site. The standard console is shown in figure 1-26. Variations are noted in the Site Differences table of figure 1-26. At all sites, the communication technician's console contains one Gates Model M5167 microphone preamplifier for each HF voice transmitter. Bendix Radio Model BXR-LA 200 line amplifiers are mounted in the console for amplifying receiver output audio, UHF transmitter microphone audio, and transmitter sidetones, as required. A Bendix Radio Model MCO-400 code oscillator is located in the console for use in modulated CW transmissions. Two blower units are installed in the console for cooling purposes. In addition to these items, the console contains control circuitry and two 28-volt d-c power supplies for energizing the control circuits.

(c). The communication technician's console at Cape Canaveral of the down-range sites to be remotely controlled from Cape Canaveral. A corresponding panel, the control status panel, is located on the communication technician's console at Grand Bahama and Grand Turk Islands to indicate when Cape Canaveral has control of these functions. At all three sites, these panels are combined with the line monitor jack panel in the upper left-hand corner of the console.

(d). At the six command sites, the communication technician's console encompasses a third Emcor FR-25A equipment rack to hold the retrofire change display panel, the command control display panel, and the command actuation panel (see figure 1-27). The command actuation panel is covered to prevent accidental actuation of the retrofire controls.

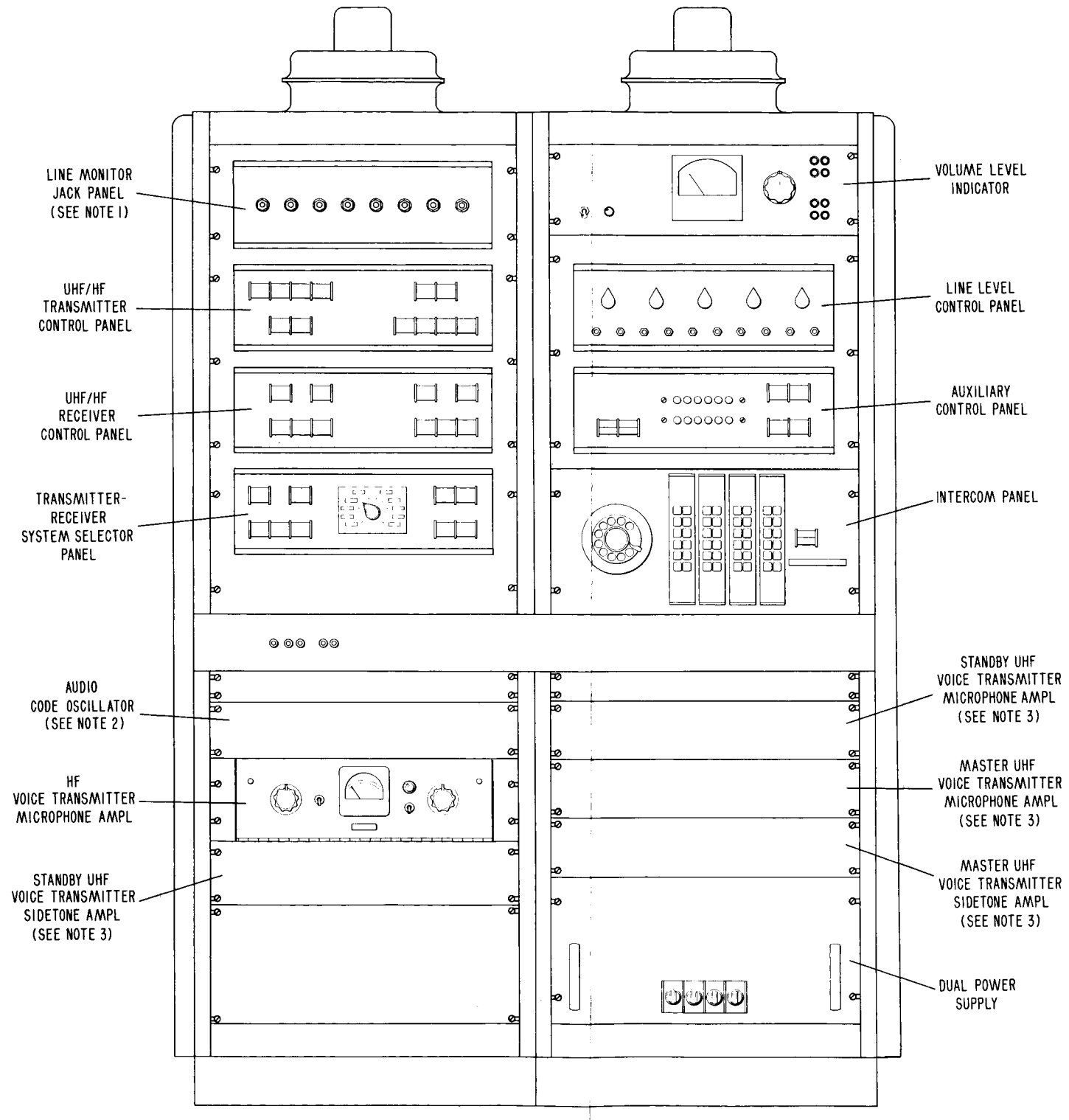

SITE DIFFERENCES

NOTE	SITE	PANEL AREA HOLDS
1	GRAND BAHAMA GRAND TURK	RANGE CONTROL STATUS PANEL
2	GRAND TURK	STANDBY HF VOICE TRANSMITTER MICROPHONE AMPLIFIER
3	GRAND BAHAMA ATLANTIC SHIP INDIAN OCEAN SHIP	NO EQUIPMENT
	GRAND TURK	AUDIO CODE OSCILLATOR

Figure 1-26. Communication Technician's Console, Double Rack

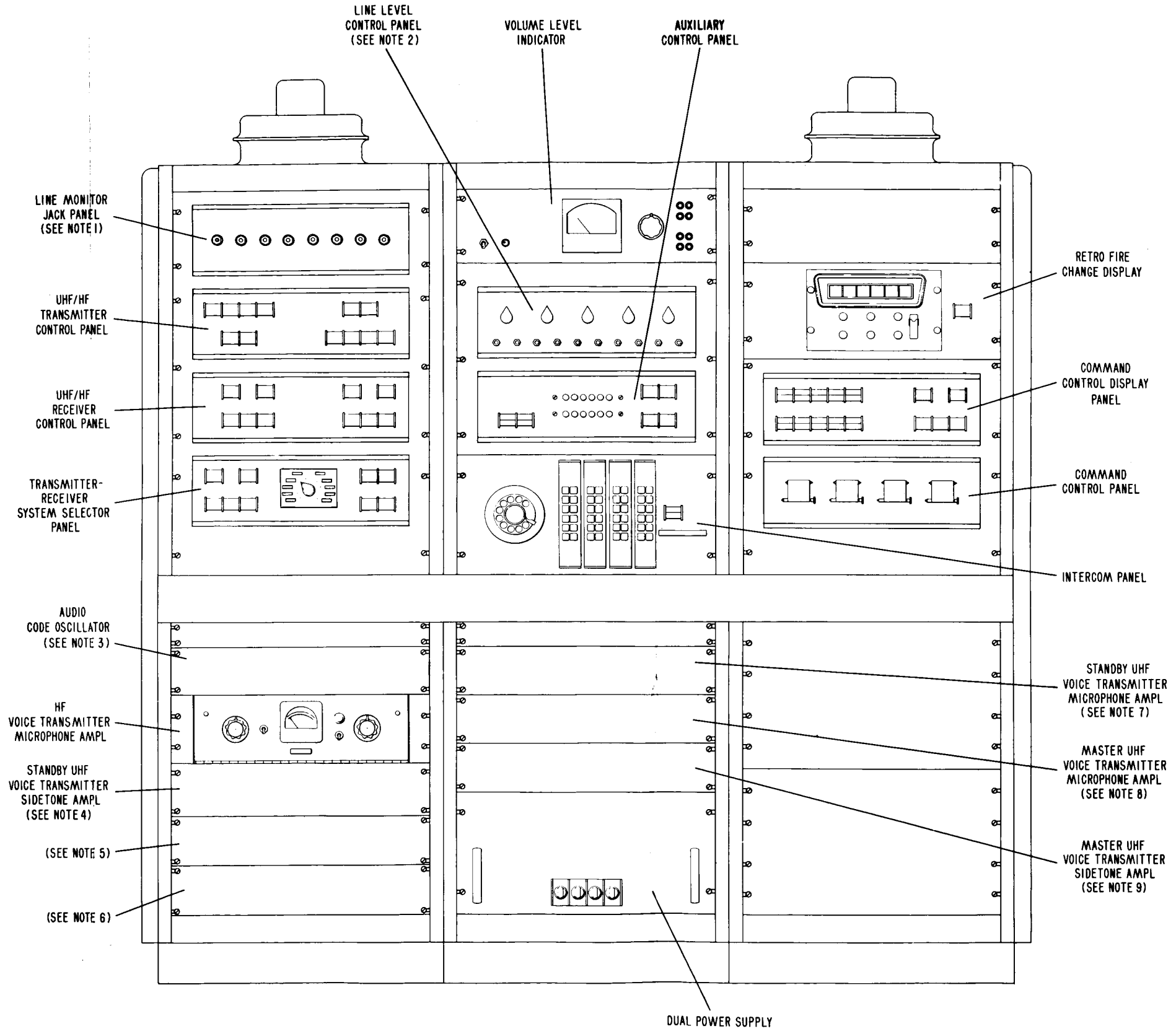

SITE DIFFERENCES

NOTE	SITE	PANEL AREA-HOLDS
1	CAPE CANAVERAL	DOWN RANGE CONTROL PANEL
2	BERMUDA PT. ARGUELLO	NO EQUIPMENT
3	BERMUDA CAPE CANAVERAL	STANDBY HF VOICE TRANSMITTER MICROPHONE AMPLIFIER
4	BERMUDA CAPE CANAVERAL	AUDIO CODE OSCILLATOR
5	BERMUDA PT. ARGUELLO	HF VOICE RECEIVER #1 AUDIO AMPLIFIER
6	BERMUDA PT. ARGUELLO	HF VOICE RECEIVER #2 AUDIO AMPLIFIER
7	BERMUDA	UHF VOICE RECEIVER #1 AUDIO AMPLIFIER
	CAPE CANAVERAL	NO EQUIPMENT
8	BERMUDA	UHF DIVERSITY COMBINER AUDIO AMPLIFIER
	CAPE CANAVERAL	NO EQUIPMENT
9	BERMUDA	UHF VOICE RECEIVER #2 AUDIO AMPLIFIER
	CAPE CANAVERAL	UHF VOICE RECEIVER #3 AUDIO AMPLIFIER

Figure 1-27. Communication Technician's Console, Triple Rack

C. FUNCTIONAL DESCRIPTION

(1). GENERAL

Functionally, the capsule communication system is made up of four subsystems: the UHF voice receiving system, the HF voice receiving system, the UHF voice transmitting system, the HF voice transmitting system. Each of these subsystems utilizes various functions of the communication technician's console. Therefore, the console will be considered separately and not as a part of any one subsystem. The following paragraphs describe the functions of the subsystems.

(2). UHF VOICE RECEIVING SYSTEM

(a). GENERAL

At all the sites except Cape Canaveral and the down-range sites (Grand Bahama and Grand Turk Islands), the UHF voice receiving system is employed as a dual space and polarization diversity receiving system in which two separate sets of antennas, preamplifiers, and receivers are used to overcome signal fading effects. The two receiver output signals are combined into one by a diversity combiner. The UHF voice receiving system, using space diversity, employs the following equipments:

1. One UHF right-hand quad-helix antenna array
2. One left-hand quad-helix antenna array
3. Two triplexers
4. Two preamplifiers
5. Two UHF voice receivers
6. One diversity combiner
7. Three line amplifiers (where required).

At Cape Canaveral and the down-range sites, the availability of a single receiving antenna makes diversity reception impossible. The antenna can be connected to either of the receivers by means of a coaxial relay mounted on the UHF antenna switching panel which is operated by a switch on the communication technician's console. System functions of the aforementioned equipment are described in the following paragraphs.

(b). ANTENNAS

Each of the two types of quad-helix antenna arrays is a broad-band device, so that each receives both the UHF voice carrier and the two telemetry carriers (TM-1 and TM-2) transmitted from the capsule. The left- and right-hand designations of these refer to the sense of circular polarization of the antennas. Two types of antenna polarization are used to enhance the diversity operation of the system. Each antenna feeds a separate channel composed of a triplexer, a preamplifier, and a UHF voice receiver.

(c). TRIPLEXER

By filtering action, the triplexer channels the UHF voice carrier, the TM-1 carrier, and the TM-2 carrier into three separate, well isolated paths. From the triplexer, the TM-1 and TM-2 signals are fed to the telemetry receiving system preamplifier and the UHF voice signal is fed to the preamplifier in the UHF voice receiving system.

(d). PREAMPLIFIER

The preamplifier amplifies the weak UHF voice signals from the triplexer, thereby compensating for line loss encountered between the antenna and the receiver. It is a special low-noise type in keeping with the overall low-noise figure of the receiving system.

(e). UHF VOICE RECEIVER

The UHF voice receiver amplifies and detects the signal applied to it from the preamplifier. This receiver provides three audio outputs. One is the post-detector audio obtained directly from the second detector stage. The second output is an amplified but low-level (10 MW) one, while the third is the more conventional, amplified high-level (up to 3 watts) audio output. The post-detector audio is normally used in this system because it serves as an input signal to the diversity combiner. The low-level audio output of the receiver is used only when the diversity combiner is not in operation. The high-level output is applied to a loudspeaker in the voice receiver rack for local monitoring. Remote receiver channel selection is provided by controls on the communication technician's console.

An auxiliary function performed by the receiver is the visual indication of a signal being present. When a signal is present a carrier-operated relay within the receiver causes the lighting of the "CARRIER" lamp on the receiver front panel.

(f). UHF VOICE DIVERSITY COMBINER

The diversity combiner amplifies and filters noise from the post-detector audio output of both of the UHF voice receivers, and then combines the two signals. In the combining process, the audio signal-to-noise ratio is enhanced. In addition, the diversity combiner contains metering circuitry that measures the $\frac{S+N}{N}$ (signal-plus-noise to noise) ratio of the audio output.

(g). LINE AMPLIFIER

1. Line amplifiers are employed in the UHF voice receiving system at Cape Canaveral, Bermuda, and Point Arguello, since at these sites one or more of the UHF voice receivers are located in buildings other than the ones housing the communication technician's consoles. These amplifiers serve to keep the UHF voice receiver audio at a constant level for insertion into the site intercom system. At all other sites attenuators are used instead of amplifiers as the UHF voice receivers are in close proximity to the communication technician's console.

2. At Cape Canaveral one line amplifier is used for UHF voice receiver No. 3 which is in Receiver Building No. 2 (TEL 2).

3. At both Bermuda and Point Arguello three line amplifiers are used in the UHF voice receiving system: one for the diversity combiner output and one for each of the two receiver amplified audio outputs.

(h). UHF VOICE RECEIVER REMOTE CONTROLS

All of the remote controls for the UHF voice receivers are mounted on the communication technician's console control panel. The remote control functions consist of channel selection, switching

between the diversity mode of operation and single receiver operation, and selection between receivers for this latter mode of operation.

(3). HF VOICE RECEIVING SYSTEM

(a). GENERAL

The HF voice receiving system is employed as a dual space diversity receiving system, similar to the UHF voice receiving system previously described. However, the two receiver audio outputs are not combined, but the better of the two is automatically selected for amplification in receiver No. 1. This is accomplished by interconnection of the diode load and AGC circuits of the two receivers. This system comprises the following equipments:

1. Two HF antenna arrays
2. Two HF voice receivers
3. Two line amplifiers (where required).

System functions of these equipments are described in the following paragraphs. Diversity reception is not used at Grand Bahama or Grand Turk Islands.

(b). HF ANTENNA ARRAY

Each HF antenna array consists of a dipole and reflector which are mounted on the UHF quad-helix array. One HF antenna array is used to feed each HF voice receiver.

(c). HF VOICE RECEIVER

The HF voice receivers amplify and detect the signals arriving from the HF antennas. For identification, these receivers are designated No. 1 and No. 2. Switching between the diversity mode and single receiver operation is done remotely at the communication technician's console.

(d). LINE AMPLIFIER

One line amplifier is used with each HF voice receiver at Bermuda and Point Arguello because at these sites the receivers are not in the same building with the communication technician's console. The line amplifier raises the amplitude of the receiver audio output

to the level required by the site intercom system, and it has the ability of maintaining a nearly constant output throughout a 10-DB change in input level. Attenuators are used instead of line amplifiers at all other sites since the receivers and communication technician's consoles are housed in the same buildings.

(e). HF VOICE RECEIVER REMOTE CONTROLS

Remote control functions of the HF voice receiver consist of switching between the diversity mode and single receiver mode of operation, and selecting one of the two receivers for this latter mode of operation. Controls for these functions are on the communication technician's console.

(4). RECEIVER AUDIO MONITORING

Audio from both the UHF and HF voice receiving systems is applied to the communication technician's console directly from the receivers and/or the diversity combiner. From the console, this audio is applied to the site intercom where it is made available to the various monitoring positions in the control center. Also, the audio is applied to the 14-track tape recorder where the UHF and HF audio are recorded on separate tracks. The air/ground loop and the flight controllers loop of the site intercommunications system is recorded on the dual-track tape recorder.

(5). UHF TRANSMITTING SYSTEM

(a). GENERAL

The UHF voice transmitting system consists of the following equipments:

1. Two UHF voice transmitters
2. Four line amplifiers (where required)
3. Remote control circuits
4. One coax switch
5. One UHF voice transmitter antenna array
6. One UHF power modulation monitor and UHF bidirectional coupler
7. One UHF dummy load
8. One audio code oscillator.

The UHF voice transmitting set normally connected to the antenna is termed the master, and the other set is termed the stand by

(b). UHF VOICE TRANSMITTER

Both the master and standby UHF voice transmitters (Radio Transmitting Set AN/GRT-3) consist of a Radio Transmitter T-282/GR and a Modulator-Power Supply MD-141A/GR. The modulator power supply provides all of the operating voltages required by the transmitter, and it also contains the modulator circuitry which amplitude-modulates the carrier generated by the transmitter. The transmitter is a single-channel, crystal-controlled type having a nominal power output of 100 watts. It can be tuned within the frequency range of 225.0 to 399.9 megacycles, but for this sytem the frequency range is restricted to 260.0 to 300.0 megacycles. Transmitter sidetones are furnished by a sidetone amplifier located within the transmitter.

(c). LINE AMPLIFIER

At all sites except Cape Canaveral, Grand Bahama Island, Grand Turk Island, Bermuda, and the two ship sites, four line amplifiers are used in the UHF voice transmitting system. Two line amplifiers are used with each UHF voice transmitter: one for amplifying microphone audio that is applied to the transmitter and one for amplifying the sidetone audio from the transmitter.

(d). UHF VOICE TRANSMITTER REMOTE CONTROLS

Remote control functions of the UHF voice transmitter consist of keying, modulating, sidetone and carrier presence monitoring, and selection between master and standby transmitter operation. Keying and modulating are performed at the capsule communicator's console position, the communication technician's console, or at other operating positions of the site intercom ground-to-air conference loop. Keying is accomplished by pressing the push-to-talk switch at these locations. In operation, the transmitter is either voice or tone modulated. During voice operation, microphone audio from any of the operating positions is amplified by the site intercom system and is then applied by relays (which are controlled by the "XMTR

SYSTEM SELECTOR" switch and the "UHF MASTER/STANDBY" switch on the communication technician's console) directly to the applicable UHF voice transmitter modulator-power supply. During MCW operation, the transmitter is keyed by selecting this mode of operation at the capsule communicator's console. The modulating tone is produced by keying the audio code oscillator with a telegraph key located at the same console. This tone signal is applied to the transmitter in the same manner as the microphone audio. All modulating audio is also applied through a relay to the capsule voice tape recorder. Sidetones from the operating transmitter are applied first to a signal presence indicator, which causes a sidetone lamp to light on the communication technician's console. The sidetone audio is then applied through a line amplifier at most sites and through the "MASTER/STANDBY" and "XMTR SYSTEM SELECTOR" switch of the console to the input of the site intercom system.

(e). COAX SWITCH AND UHF VOICE TRANSMITTER ANTENNA ARRAY

A coax switch connects either the master or the standby UHF voice transmitter to the antenna. This switch is remotely operated by the UHF transmitter selector switch on the communication technician's console.

(f). UHF POWER MODULATION MONITOR, UHF BIDIRECTIONAL COUPLER, AND UHF DUMMY LOAD

The UHF power modulation monitor when used with the bidirectional coupler provides direct measurement of incident power (transmitter carrier), reflected power, and per cent of modulation. From the two types of power measurement, the VSWR can easily be calculated. This unit also provides local visual indications of carrier or incident power reduction, reflected power increase, and modulation reduction. Remote indication of a UHF transmitter carrier being present is furnished by a relay in this unit causing a lamp to light on the communication technician's console. The UHF dummy load is used whenever it is desired to key the transmitter without radiating from an antenna.

(g). AUDIO CODE OSCILLATOR

The audio code oscillator provides a 1020-CPS tone for modulating the UHF and/or HF voice transmitters when the MCW mode of operation is desired. This unit is keyed by operating a telegraph key at the capsule communicator's console.

(6). HF VOICE TRANSMITTING SYSTEM

(a). GENERAL

The HF voice transmitting system consists of the following:

1. One HF voice transmitter (two are used at three of the sites)

2. One HF voice transmitter microphone preamplifier for each HF transmitter

3. One line amplifier for sidetones

4. Remote control circuits

5. One coax switch (used only when two HF voice transmitters are employed)

6. One HF voice antenna array

7. One HF power modulation monitor and HF bidirectional coupler

8. One HF dummy load

9. One audio code oscillator.

Both a master and a standby HF voice transmitter are used at Cape Canaveral, Grand Turk Island, and Bermuda. All the other sites equipped with a capsule communication system have only one HF voice transmitter.

(b). HF VOICE TRANSMITTER

The HF voice transmitter transmits double sideband, amplitude-modulated voice signals in the frequency range of 15 to 30 megacycles. It has a power output of 225 or 250 watts (depending on the transmitting frequency) and two crystal-controlled, preset channels which are remotely selected at the communication technician's console.

(c). HF VOICE TRANSMITTER MICROPHONE PREAMPLIFIER

The HF voice transmitter microphone preamplifier is a Gates Radio Co. model M5167 Sta-Level Amplifier, which provides a constant average level of microphone audio to the HF voice transmitter. Input level variations of ±15 db produce output level variations of only ±4 db.

(d). LINE AMPLIFIER

The line amplifier amplifies and maintains at a constant level the sidetone audio of the HF voice transmitter.

(e). HF VOICE TRANSMITTER REMOTE CONTROL CIRCUITS

Remote control functions of the HF voice transmitter consist of keying, modulating, sidetone and carrier presence monitoring, and, where applicable, selection between master and standby transmitter operation. Keying and modulating are performed at the capsule communicator's control position, the communication technician's console, or at other operating positions of the site intercom ground-to-air conference loop. Keying is accomplished by pressing the push-to-talk switch at these locations. In operation, the transmitter is either voice or tone modulated. During voice operation, microphone audio from either of these locations is amplified by the site intercom system and is then routed through the communication technician's console by relays (which are controlled by the "XMTR SYSTEM SELECTOR" switch, assuming that this switch is in the "HF" position, and the "HF MASTER/STANDBY" switch on the communication technician's console) directly to the applicable HF voice transmitter microphone preamplifier and transmitter. During MCW operation, the transmitter is keyed by selecting this mode of operation at the capsule communicator's console. The modulating tone is produced by keying the audio code oscillator with a telegraph key located at the same console. This tone signal is applied to the transmitter in the same manner as the microphone audio. All modulating audio is also applied through a relay to the capsule voice tape recorder. Transmitter sidetones are obtained from a diode in the HF power modulation monitor and are amplified by the line

amplifier in the HF monitor rack. The sidetone audio is applied to a signal presence indicator in the communication technician's console which causes a lamp to light on the console. Relays which are controlled by the "MASTER/STANDBY" and "XMTR SYSTEM SELECTOR" switches of the console, route the sidetone audio to the input of the site intercom system.

(f). COAX SWITCH AND HF VOICE TRANSMITTER ANTENNA ARRAY

At sites where two transmitters are used, a coax switch connects either the master or the standby HF voice transmitter to the antenna. This switch is remotely operated by an HF transmitter selector switch on the communication technician's console. The HF voice transmitter antenna is a horizontally-polarized array consisting of a dipole and a reflector.

(g). HF POWER MODULATION MONITOR, BIDIRECTIONAL COUPLER, AND DUMMY LOAD

The power modulation monitor when used with the bidirectional coupler provides direct measurement of incident power (transmitter carrier), reflected power, and per cent of modulation. From the two types of power measurement, the VSWR can be easily calculated. This unit also provides local visual indications of carrier or incident power reduction, reflected power increase, and modulation reduction. Presence of an HF transmitter carrier energizes a relay at this unit which causes a lamp to light on the communication technician's console. In addition to supplying the power modulation monitor with samples of direct and reflected power, the bidirectional coupler furnishes transmitter sidetones by means of a diode which detects the modulated transmitted carrier. The dummy load is used whenever it is desired to key the transmitter without transmitting a signal.

(h). AUDIO CODE OSCILLATOR

The audio code oscillator provides a 1020-CPS tone for modulating the HF and/or UHF voice transmitters when the MCW mode of operation is desired. This unit is keyed by operating a telegraph key at the capsule communicators console.

(7). DOWN-RANGE CONTROL AT CAPE CANAVERAL

Circuitry has been provided to permit audio signals originating at Cape Canaveral to be transferred by submarine cable to either Grand Bahama Island or Grand Turk Island and transmitted to the capsule from these sites. Similarly, voice signals from the capsule received at either of the two down-range sites can be relayed back to Cape Canaveral over the same cable. The mode of transmission and reception (HF or UHF, master transmitter or standby, receiver No. 1 or No. 2, etc.) for the down-range site equipment is not controllable at Cape Canaveral but must be selected at the communication technician's console at the individual site. The Cape Canaveral transmitters and receivers are made inoperative at the communication technician's console while the down-range site is being used as the transmitting and receiving point. Only one down-range site can be so used at any given time. Use of the down-range sites in this manner is also restricted by the capacity of the submarine cable, because the cable is shared by other agencies. Connections to the cable are through a tone remoting system which is not a part of the capsule communications system.

D. OPERATING CONTROLS

Table 1-VI lists the front panel controls, switches, indicator lamps, meters, etc. used in operation of the capsule communication equipment. The symbol number and function of each control is also listed.

TABLE 1-VI LOCATION AND FUNCTION OF OPERATING CONTROLS

Symbol Number	Control Designation	Control Function
HF/UHF SIGNAL GENERATOR (See figure 3-1)		
DS501	Power On Lamp	Glows when "FIL-ON" switch is placed in "ON" position.
DS502	150 VDC Lamp	Glows when "150 VDC ON" switch is placed in the "ON" position.
F503	"3 Amp" Fuse	Neon light indicates fuse in primary power (105-125 VAC) line is blown.
F504	"3 Amp" Fuse	Neon light indicates fuse in primary power (105-125 VAC) line is blown.
F505	"1/2 Amp" Fuse	Neon light indicates fuse in 150 VDC line is blown.

TABLE 1-VI LOCATION AND FUNCTION OF OPERATING CONTROLS (Cont.)

Symbol Number	Control Designation	Control Function
		HF/UHF SIGNAL GENERATOR (See Figure 3-1) (Cont.)
M501	"TEST METER"	Provides an indication of the "Meter Selector" switch positions.
S501	"UHF-OFF-HF" Switch	In the "UHF" position, the UHF generating circuits are energized; in the "HF" position, the HF generating circuits are energized; in the "OFF" position, the signal generator can be controlled remotely.
S502	"METER SELECTOR" Switch	Position — Function 1 — UHF oscillator grid current 2 — UHF 1st amplifier grid current 3 — UHF tripler grid current 4 — UHF final amplifier grid current 5 — UHF modulation factor 6 — HF oscillator grid current 7 — HF final amplifier grid current 8 — HF modulation factor 9 — Filament voltage 10 — Regulated high voltage supply voltage 11 — Not used 12 — Test meter "OFF"
S503	"FIL-ON" Switch	Applies filament voltage to the HF/UHF signal generator.
S504	"+150 VDC ON" Switch	Applies +150 volts dc to the HF/UHF signal generator.
		PREAMPLIFIER POWER PANEL (See figure 3-2)
F101	Fuse	Protects preamplifier circuitry.
I101	Power On Lamp	Glows when "POWER" switch is turned to the "ON" position and if power is actually applied to the preamplifier.
S101	"POWER" Switch	Energizes the preamplifier when placed in the "ON" position.
		UHF VOICE RECEIVER (See figure 3-3)
F1201	"PLATE" Fuse	Protects B+ circuits of the receiver.
F1202	"FIL" Fuse	Protects filament circuits of the receiver.
I1202	"POWER" On Lamp	Glows when "POWER" switch is turned to the "ON" position.

TABLE 1-VI LOCATION AND FUNCTION OF OPERATING CONTROLS (Cont.)

Symbol Number	Control Designation	Control Function
UHF VOICE RECEIVER (See figure 3-3) (Cont.)		
I1203	"CARRIER" Lamp	Glows whenever a signal is received.
J1214	"LOCAL CONTROL" Jack	Provides means of connecting plug P4026 to receiver.
J1215	"AUX CONTROL" Jack	Provides means of connecting plug P4024 to receiver.
J1216	"50-60 CPS POWER" Jack	Provides means of connecting receiver to 115V power source through plug P4028.
R1204	"Quieting" Control	Adjusts the sensitivity and hence the noise level of the receiver when there is no signal present to actuate the carrier-operated relay.
R1205	"AF GAIN" Control	Enables the operator to change the audio output level.
R1207	"MAIN GAIN" Control	Regulates the gain of the IF amplifiers and, hence, the squelch threshold level of the receiver.
S1101	"CHANNEL SELECTOR" Switch	Enables the operator to select any one of the 10-preset frequency channels.
S1201	"POWER" Switch	Energizes the receiver when turned to the "ON" position.
S1202	"RF GAIN" Local-Remote AVC Off Switch	In the "OFF" position, the AVC voltage is removed and the receiver sensitivity is thus increased.
S1203	"FREQ RESPONSE" Switch	In the "NARROW" position, a 400-3000 CPS bandpass filter is inserted in the audio circuit. In the "BROAD" position, the audio response is flat between 200 and 20,000 CPS.
S1204	"AVC TIME CONSTANT" Switch	Changes the AVC time constant from 1/10 second in the "COMM" position to 1 second in the D/F position.
S1205	"SQUELCH" Switch	Determines whether or not the receiver is squelched during periods of audio silence.
	"ANTENNA" Jack	Provides means of connecting external antenna to receiver.
	"AVC VOLTS" Jack	Provides means of measuring AVC voltage.
	CHANNELS 1 to 10 and MANUAL Preset Switches	Rotary knurled disc-type switches which permit setting the frequencies to the ten automatic preset channels and the MANUAL channel.

TABLE 1-VI LOCATION AND FUNCTION OF OPERATING CONTROLS (Cont.)

Symbol Number	Control Designation	Control Function
	UHF VOICE RECEIVER (See figure 3-3) (Cont.)	
	"CHANNEL-FREQUENCY" Indicators	Indicates the channel and the frequency to which the receiver is tuned.
	"Phones" Jack	600-ohm headphone or speaker jack connection.
	HF VOICE RECEIVER (See figure 3-4)	
C225	"ANT TRIM" Control	Permits peaking of received signal to maximum value.
J102	"PHONES" Jack	Provides means of connecting headset to receiver.
M101	"LINE LEVEL" Meter	Indicates level of balanced-line audio output.
M102	"CARRIER LEVEL" Meter	Indicates level of incoming RF signal.
R103	"RF GAIN" Control	Controls gain of RF and IF amplifiers.
R104	"LINE GAIN" Control	Controls level of AF signal applied to balanced-line output terminals.
R105	"LOCAL GAIN" Control	Controls level of AF signal applied to local output terminals.
S101	"BFO" Switch	Places beat frequency oscillator in or out of operation.
S102	"FUNCTION" Switch	In OFF position, receiver is turned completely off. Other positions and functions are: Positions — Function Standby — Receiver inoperative but ready for instant use AGC — Receiver operative with gain controlled automatically MGC — Receiver operative, with gain controlled manually CAL — Permits calibration of the tuning system at 100 KC intervals
S103	"BREAK IN" Switch	Permits break-in operation of receiver when proper connections have been made at rear panel.
S104	"AUDIO RESPONSE" Switch	Varies response of audio amplifier.

TABLE 1-VI LOCATION AND FUNCTION OF OPERATING CONTROLS (Cont.)

Symbol Number	Control Designation	Control Function
	HF VOICE RECEIVER (See figure 3-4) (Cont.)	
S105	"LINE METER" Switch	In OFF position, disconnects LINE LEVEL meter from balanced-line output. In +10 position, 10 VU is to be added to LINE LEVEL volume units reading in 0 position, LINE LEVEL meter is read directly in volume units; in -10 position, 10 VU is to be subtracted from LINE LEVEL volume units reading.
S107	AGC Switch	Determines rapidity of change in gain of receiver for a change of signal strength.
S108, R120	"LIMITER" Switch and Control	Peak signal impulses are cut off to reduce static interference.
S501, S502, S503	"BANDWIDTH" Switch	Selects width of the IF pass band in KC.
Z502	"BFO PITCH" Control	Varies frequency of tone when receiving CW signals.
	Dial Lock	Locks KILOCYCLE CHANGE Control.
	"KILOCYCLE CHANGE" Control	Tunes receiver to any frequency within a band.
	"MEGACYCLE CHANGE" Control	Selects any one of 32 tuning steps.
	Zero adjust control	Disengages frequency indicator from KILOCYCLE CHANGE control for calibration purposes.
	DUAL SPEAKER PANEL (See figure 3-5)	
S4701	UHF Selector Switch	The functions of the UHF selector are as follows: Position — Function "UHF #1" — Provides UHF voice audio reception from receiver #1. "DIV COMB" — Provides UHF voice audio reception from receiver #1 and receiver #2 simultaneously. "UHF #2" — Provides UHF voice audio reception from receiver #2. "SPARE" — (Not wired)

TABLE 1-VI LOCATION AND FUNCTION OF OPERATING CONTROLS (Cont.)

Symbol Number	Control Designation	Control Function
		DUAL SPEAKER PANEL (See figure 3-5) (Cont.)
S4702	HF Selector Switch	Position / Function "HF #1" — Provides HF voice audio reception from receiver #1. "HF #2" — Provides HF voice audio reception from receiver #2. "SPARE" "SPARE"
S4703	System Selector Switch	The functions of the system selector switch are as follows: Position / Function "UHF" — Provides UHF voice audio reception "BOTH" — Provides UHF and HF voice audio reception simultaneously. "HF" — Provides HF voice audio reception.
Z4701	"UHF VOLUME" Control	Provides a means of adjusting the level of the UHF voice audio.
Z4702	"HF VOLUME" Control	Provides a means of adjusting the level of the HF voice audio.
		DUAL DIVERSITY COMBINER (See figure 3-6)
DS101	Power on lamp	Glows when "POWER" switch is placed in the "ON" position.
DS102	+300 VDC on lamp	Glows when "+300 VDC" switch is placed in the "ON" position.
F103	".25 AMP" Fuse	Neon light indicates fuse in +300 VDC line is blown.
F104	"3 AMP" Fuse	Neon light indicates fuse in primary power (105-125 VAC) line is blown.
F105	"3 AMP" Fuse	Neon light indicates fuse in primary power (105-125 VAC) line is blown.
J106	"LOW LEVEL LINE MONITOR"	Provides a means of monitoring output of low level audio channel.
M101	$\frac{S+N}{N}$ Meter	Indicates signal plus noise to noise ratio. This indicator is used only when a test signal of 1020 CPS is fed to the diversity combiner input.
R107	"CH#1 NOISE" Control	Provides a means of setting the gain of the noise circuits in channel No. 1.

TABLE 1-VI LOCATION AND FUNCTION OF OPERATING CONTROLS (Cont.)

Symbol Number	Control Designation	Control Function
DUAL DIVERSITY COMBINER (See figure 3-6) (Cont.)		
R121	"SET LEVEL ADJ" Control	Controls the voltage level of the information fed to the S+N/N meter channel by channel No. 1 and channel No. 2.
R130	"READ ADJ" Control	Provides a means of setting the gain of the signal circuits in the S+N/N meter channel.
R131	"ZERO ADJ" Control	Provides a means of setting the gain of the noise circuits in the S+N/N meter channel.
R164	"AUDIO GAIN" Control	Varies the audio output level of the hi-level audio circuit.
R179	"CH #2 NOISE" Control	Provides a means of setting the gain of the noise circuits in channel No. 2.
R184	"CH #2 INPUT" Control	Provides a means of setting the input level to channel No. 2.
R101	"CH #1 INPUT" Control	Provides a means of setting the input level to channel No. 1.
S101	"CHANNEL SELECTOR" Switch	Selects one of three modes of combiner operation; (1) channel No. 1, (2) Channel No. 2, (3) Combined-Channel No. 1 and Channel No. 2.
S102	"TEST" Switch	Connects outputs of channel No. 1 and channel No. 2 to S+N/N meter channel.
S103	"READ-SET-LEVEL" Switch	In "SET LEVEL" position, the S+N/N meter is connected to the input of the S+N/N channel for the purpose of adjusting the "LEVEL" of the S+N/N channel. In the "READ" position, the S+N/N meter is connected to the output of the S+N/N meter channel for the purpose of reading the S+N/N ratio.
S104	"+300 VDC" Switch	Closes +300 VDC line from power supply to rest of diversity combiner.
S105	"POWER" Switch	Closes primary power line, turn-on power supply and filaments.
DUAL-TRACK TAPE RECORDER (See figure 3-7)		
J17	"MONITOR" Jack	Provides a means of connecting a set of high impedance headphones for monitoring purposes.
R7, R51	"PLAYBACK" Gain Control	Provides a means of regulating audio output during playback.

TABLE 1-VI LOCATION AND FUNCTION OF OPERATING CONTROLS (Cont.)

Symbol Number	Control Designation	Control Function
	DUAL-TRACK TAPE RECORDER (See figure 3-7)	
R30, R112	"RECORD" Master Gain Control	Provides a means of simultaneously regulating audio input into channel No. 1 and channel No. 2.
R31	"CH. 1 GAIN" Control	Provides a means of regulating audio input into channel No. 1.
R75	"CH. 2 GAIN" Control	Provides a means of regulating audio input into channel No. 2.
S1	Meter Switch	Provides a means of selecting "BIAS", "RECORD", or "PLAY" back signals for monitoring purposes.
S2	Channel Selector Switch	Provides a means of selecting Channel No. 1, channel No. 2 or stereophonic for recording.
S3	Tape Speed Selector Switch	Provides means of selecting either slow or fast tape speed.
S6	Tape Lift Switch	In the "CUE" position, the tape is in contact with the heads at all times; in the "OPERATE" position, the tape is in contact with the heads in the "RECORD" and "PLAYBACK" mode of operation only; in the "LOAD" position, the tape break arm is pulled clear of the loading slot and the brakes are applied.
S901	Playback Channel Selector	Provides means of selecting channel No. 1 or channel No. 2 for playback.
	Record Interlock Switch	Insures that the "RECORD" switch will not be depressed accidently.
	Record Indicator	Glows when the "RECORD" switch is depressed.
	VU Meter (top)	Provides an indication of record, playback, or bias signals for channel No. 1.
	VU Meter (bottom)	Provides an indication of record, playback, or bias signals for channel No. 2.
	"FAST FWD" Switch	Enables the operator to cue or takeup a tape.
	"PLAY" Switch	Enables the operator to playback a previously recorded tape.
	"STOP" Switch	Enables the operator to stop the tape movement.
	"REC" Switch	Enables the operator to make a recording.
	"RWD" Switch	Enables the operator to rewind a tape.

TABLE 1-VI LOCATION AND FUNCTION OF OPERATING CONTROLS (Cont.)

Symbol Number	Control Designation	Control Function
ANTENNA SWITCHING PANEL, VOICE RECEIVER RACK (See figure 3-12)		
J4801	Antenna No. 1 Jack	
J4802	Receiver No. 1 Jack	
J4803	Spare Jack	
J4804	Switch No. 1 Jack	
J4805	Switch Common Jack	
J4806	Switch No. 2 Jack	
J4807	Antenna No. 2 Jack	
J4808	Receiver No. 2 Jack	
S4801	Energizes antenna relay.	
HF VOICE TRANSMITTER MICROPHONE AMPLIFIER (See figure 3-14)		
M1	"DB COMPRESSION" Meter	Provides an indication of the compression level.
R1	"INPUT" Control	Provides a means of adjusting the level of the audio input.
R27	"OUTPUT" Control	Provides a means of adjusting the level of the audio output.
S1	"RECOVERY TIME" "SINGLE" "DOUBLE" Switch	In the "SINGLE" position, the recovery time is relatively fixed; in the "DOUBLE" position, the recovery time is such that the average level of modulation is kept very high.
S2	"ON-OFF" Switch	Energizes the HF voice transmitter microphone amplifier when placed in the "ON" position.
XA1	"POWER" Indicator	Glows when the power switch is placed in the "ON" position.
TRANSMITTER-RECEIVER SYSTEM SELECTOR PANEL (See figure 3-18)		
DS1011, DS1014	"UHF SIGNAL PRESENT" lamps	Glow when a UHF voice audio is being received.
DS1017, DS1020	"HF SIGNAL PRESENT" lamps	Glow when HF voice audio is being received.
DS1039, DS1040	"UHF CARRIER PRESENT" lamps	Glow when UHF transmission is being used.
DS1128, DS1129	"HF CARRIER PRESENT" lamps	Glow when HF transmission is being used.

TABLE 1-VI LOCATION AND FUNCTION OF OPERATING CONTROLS (Cont.)

Symbol Number	Control Designation	Control Function
TRANSMITTER-RECEIVER SYSTEM SELECTOR PANEL (See figure 3-18) (Cont.)		
S1004	"UHF RCVR" Switch	Enables the operator to select the UHF receivers for audio reception.
S1006	"HF RCVR" Switch	Enables the operator to select the HF receivers for audio reception.
S1015	"UHF/HF XMTR" Switch	Enables the operator to select both UHF and HF transmission.
S1016	"UHF XMTR" Switch	Enables the operator to select UHF transmission.
S1017	"HF XMTR" Switch	Enables the operator to select HF transmission.
S1031	"UHF RCVR CHAN SEL" Switch	Enables the operator to select 1 of 10 channels for audio reception.
LINE MONITOR JACK PANEL (See figure 3-19)		
J1011	Intercom "MIKE" Jack	Monitoring point for microphone audio from intercom.
J1012	Intercom "SIDE" Jack	Monitoring point for side tones to intercom.
J1013	Intercom "RCVR IN USE" Jack	Monitoring point for receiver-in-use audio going to intercom.
J1014	Intercom "RCVR MONITOR" Jack	Monitoring point for monitor receiver audio going to intercom.
J1015	Tape Recorder "UHF" Jack	Monitoring point for UHF received or microphone audio going to recorder.
J1016	Tape Recorder "HF" Jack	Monitoring point for HF received or microphone audio going to recorder.
J1019	"XMTR HF SIDE" Jack	Monitoring point for incoming sidetones from HF transmitter.
J1020	"SPARE" Jack	
DOWN-RANGE CONTROL PANEL (CAPE CANAVERAL ONLY) (See figure 3-20)		
DS1144, DS1145	"SYSTEM IN USE" Lamps	Glow when either of the down-range sites are slaved to Cape Canaveral site.
DS1146, DS1147	"RCVR SIGNAL PRESENT" Lamps	Glow when received signal is present on slaved down-range site lines.
S1025	"ALL OFF" Switch	Removes control of a slaved down-range site; returns all transmitting and receiving functions to Cape Canaveral
S1026	"XMTR GBI" Switch	Operates relay at GBI to connect Canaveral PTT and microphone audio lines to the GBI transmitter.

TABLE 1-VI LOCATION AND FUNCTION OF OPERATING CONTROLS (Cont.)

Symbol Number	Control Designation	Control Function
DOWN-RANGE CONTROL PANEL (CAPE CANAVERAL ONLY) (See figure 3-20) (Cont.)		
S1027	"RCVR GBI" Switch	Operates relay at GBI to connect GBI receiver audio to Canaveral lines.
S1028	"XMTR GTI" Switch	Operates relay at GTI to connect Canaveral PTT and microphone audio lines to GTI transmitter.
S1029	"RCVR GTI" Switch	Operates relay at GTI to connect GTI receiver audio to Canaveral lines.
S1030	"PUSH TO TALK ON" Switch	Operates relay at Cape Canaveral to connect microphone audio, PTT voltage, and receiver audio circuits to down-range lines.
J1011 through J1016	Monitor Jacks	(See line monitor jack panel.)
J1017	"UHF MAS XMTR SIDE-TONE" Jack	Monitoring point for UHF master transmitter sidetones.
J1018	"UHF STBY XMTR SIDE-TONE" Jack	Monitoring point for UHF standby transmitter sidetones.
J1019	"HF XMTR SIDETONE" Jack	Monitoring point for HF transmitter sidetones.
DOWN RANGE STATUS CONTROL PANEL (GBI AND GTI ONLY) (See figure 3-21)		
DS1148, DS1149	"RCVR ON" Lamps	Glow when receiver functions are slaved to Cape Canaveral.
DS1146, DS1149	"XMTR ON" Lamps	Glow when transmitter functions are slaved to Cape Canaveral.
DS1150, DS1151	"PTT ON" Lamps	Glow when Cape Canaveral receiving and transmitting functions are connected to the down-range lines and local transmitter is selected.
J1011 through J1020	Monitor Jacks	(See line monitor jack panel.)
DS1035, DS1036	UHF "MASTER ALARM" Lamps	Glow when UHF master transmitter input voltage drops below a predetermined level.
DS1037, DS1038	UHF "MASTER SIDE-TONE" Lamps	Glow when a modulated signal is being transmitted by the UHF master transmitter.

TABLE 1-VI LOCATION AND FUNCTION OF OPERATING CONTROLS (Cont.)

Symbol Number	Control Designation	Control Function
DOWN RANGE STATUS CONTROL PANEL (GBI AND GTI ONLY) (See figure 3-21) (Cont.)		
DS1041, DS1042	UHF "STANDBY SIDE-TONE" Lamps	Glow when a modulated signal is being transmitted by the UHF standby transmitter.
DS1043, DS1044	UHF "STANDBY ALARM" Lamps	Glow when UHF standby transmitter input voltage drops below a predetermined level.
DS1130, DS1131	HF "STANDBY SIDE-TONE" Lamps	Glow when a modulated signal is being transmitted by the HF standby transmitter.
DS1132, DS1133	HF "MASTER SIDETONE" Lamps	Glow when a modulated signal is being transmitted by the HF master transmitter.
S1010	UHF "MASTER" Switch	Enables operator to select the master UHF transmitter for operation.
S1011	UHF "STANDBY" Switch	Enables operator to select the standby UHF transmitter for operation
S1019	HF "MASTER" Switch	Enables operator to select the master HF transmitter for operation.
S1020	HF "STANDBY" Switch	Enables operator to select the standby HF transmitter for operation.
S1021	HF "CHANNEL 1" Switch	Enables operator to select channel No. 1 of the HF transmitter for operation.
S1022	HF "CHANNEL 2" Switch	Enables operator to select channel No. 2 of the HF transmitter for operation.
UHF/HF RECEIVER CONTROL PANEL (See figure 3-22)		
DS1001, DS1002	UHF "SIGNAL PRESENT RCVR 1" Lamps	Glow when an audio signal is being detected by UHF Receiver No. 1.
DS1009, DS1010	UHF "SIGNAL PRESENT RCVR 2" Lamps	Glow when an audio signal is being detected by UHF receiver No. 2.
DS1015, DS1016	HF "SIGNAL PRESENT RCVR 2" Lamps	Glow when an audio signal is being detected by HF receiver No. 2.
DS1027, DS1028	HF "SIGNAL PRESENT RCVR 1" Lamps	Glow when an audio signal is being detected by HF receiver No. 1.
S1001	UHF "RCVR 2" Switch	Enables the operator to select UHF voice audio from UHF receiver No. 2.
S1002	UHF "DIVERSITY" Switch	Enables the operator to select UHF voice audio from the UHF diversity combiner.
S1003	UHF "RCVR 1" Switch	Enables the operator to select UHF voice audio from UHF receiver No. 1.

TABLE 1-VI LOCATION AND FUNCTION OF OPERATING CONTROLS (Cont.)

Symbol Number	Control Designation	Control Function
UHF/HF RECEIVER CONTROL PANEL (See figure 3-22) (Cont.)		
S1007	HF "RCVR 1" Switch	Enables the operator to select HF voice audio from HF receiver No. 1.
S1008	HF "DIVERSITY" Switch	Enables the operator to select HF diversity voice audio.
S1009	HF "RCVR 2" Switch	Enables the operator to select HF voice audio from HF receiver No. 2.
AUXILIARY CONTROL PANEL (See figure 3-24)		
DS1015, DS1016	"#2 ON" Lamps	Glow when the No. 2,28VDC power supply is energized.
DS1023, DS1024	"#1 ON" Lamps	Glow when the No. 1,28VDC power supply is energized.
DS1049, DS1050	"UHF IN USE" Lamps	Glow when switch S4501 is in the UHF position and/or when switch S1012 is depressed.
DS1051, DS1052	"HF IN USE" Lamps	Glow when switch S4501 is in the HF position and/or when switch S1013 is depressed.
S1005, DS1113, DS1114	"#1 OFF" Switch	De-energizes the No. 1,28VDC power supply and energizes lamps DS1113 and DS1114.
S1012	"UHF SIG. GEN" Switch	Provides remote control of the UHF generating circuits in the HF/UHF signal generator.
S1013	"HF SIGNAL GEN" Switch	Provides remote control of the HF generating circuits in the HF/UHF signal generator.
S1018, DS1117, DS1118	"#2 OFF" Switch	De-energizes the No. 2, 28 VDC power supply and energizes lamps DS1117 and DS1118.
VOLUME LEVEL INDICATOR CONTROL PANEL (See figure 3-25)		
	VU Meter	
	"BRIDGING INPUT"	12.5K
	"TERM INPUT"	600Ω
	Range Control	-40 dbm to +20 dbm
	Indicator Lamp	
	"POWER" Switch	

TABLE 1-VI LOCATION AND FUNCTION OF OPERATING CONTROLS (Cont.)

Symbol Number	Control Designation	Control Function
LINE LEVEL CONTROL PANEL (See figure 3-26)		
AT1001	"UHF RCVR #1"	Provides a means of controlling the UHF receiver No. 1 audio level.
AT1002	"UHF RCVR DIV"	Provides a means of controlling the diversity receiving audio level.
AT1002	"UHF RCVR #2" (Cape Canaveral, GBI, and GTI only)	Provides a means of controlling the UHF receiver No. 2 audio level.
AT1003	"UHF RCVR #2"	Provides a means of controlling the UHF receiver No. 2 audio level.
AT1003	Spare (At GBI and GTI only)	
AT1003	"RCVR DOWN RANGE" (Cape Canaveral only)	Provides a means of controlling the receiver audio from GBI or GTI.
AT1004	"HF RCVR #1"	Provides a means of controlling the HF receiver No. 1 audio level.
AT1005	"UHF RCVR #2"	Provides a means of controlling the HF receiver No. 2 audio level.
J1001	UHF RCVR #1 "IN"	Provides a means of monitoring audio input of AT1001.
J1002	UHF RCVR #1 "OUT"	Provides a means of monitoring audio output of AT1001.
J1003	UHF RCVR DIV "IN"	Provides a means of monitoring audio input of AT1002.
J1004	UHF RCVR DIV "OUT"	Provides a means of monitoring audio output of AT1002.
J1005	UHF RCVR #2 "IN"	Provides a means of monitoring audio input of AT1003.
J1006	UHF RCVR #2 "OUT"	Provides a means of monitoring audio output of AT1003.
J1007	HF RCVR #1 "IN"	Provides a means of monitoring audio input of AT1004.
J1008	HF RCVR #1 "OUT"	Provides a means of monitoring audio output of AT1004.
J1009	HF RCVR #2 "IN"	Provides a means of monitoring audio input of AT1005.
J1010	HF RCVR #2 "OUT"	Provides a means of monitoring audio output of AT1005.

TABLE 1-VI LOCATION AND FUNCTION OF OPERATING CONTROLS (Cont.)

Symbol Number	Control Designation	Control Function
SITE INTERCOMMUNICATIONS PANEL (See figure 3-27)		
S1014	"START-STOP" Switch	Starts and stops dual-track tape recorder
	Dial	Intercom control
	Keys	Intercom control
SPECIAL INTERCOMMUNICATIONS PANEL (See figure 3-28)		
	"SIDETONE VOLUME" Control	Provides a means of adjusting sidetone output level.
	Speaker	Provides the audio output.
	"SPEAKER VOLUME" Control	Provides a means of adjusting the audio output level of the speaker.
	"HEADPHONE VOLUME" Control	Provides a means of adjusting the audio output level of the headphones.
	"HEADSET" Jack	Provides a means of connecting a headset.
	"CHANNEL SELECTOR" Switch	Provides a means of selecting between channels.
	"SIDETONE SELECTOR" Switch	Provides a means of selecting between sidetone channels.
	"HEADSET" Jack	Provides a means of connecting a headset.
RETROFIRE CHANGE DISPLAY UNIT (See figure 3-29)		
DS1157, DS1158	"CONTROL ON" Lamps	
	"COMMAND" Switch	
COMMAND DISPLAY PANEL (See figure 3-30)		
DS1069, DS1070	"COMMAND" Lamps	
DS1071, DS1072	Seconds Read-in Lamps	
DS1073, DS1074	Seconds Transmitting Lamps	
DS1075, DS1076	Minutes Read-in Lamps	
DS1077, DS1078	Minutes Transmitting Lamps	
DS1079, DS1080	Hours Read-in Lamps	
DS1081, DS1082	Hours Transmitting Lamps	

TABLE 1-VI LOCATION AND FUNCTION OF OPERATING CONTROLS (Cont.)

Symbol Number	Control Designation	Control Function
COMMAND DISPLAY PANEL (See figure 3-30) (Cont.)		
DS1083, DS1084	Spare Lamps	
DS1085, DS1086	Spare Lamps	
DS1087, DS1088	Reverse Indication Lamps	
DS1089, DS1090	Reverse Transmitting Lamps	
DS1091, DS1092	Address Indication Lamps	
DS1093, DS1094	Address Transmitting Lamps	
DS1095, DS1096	Abort Indication Lamps	
DS1097, DS1098	Abort Transmitting Lamps	
DS1099, DS1100	Fire Retro Indication Lamps	
DS1101, DS1102	Fire Retro Transmitting Lamps	
DS1103, DS1104	Carrier Indication Lamps	
DS1105, DS1106	"FRW-2 #1 CARRIER PRESENT" Lamps	
DS1107, DS1108	"FRW-2 #2 CARRIER PRESENT" Lamps	
DS1109, DS1110	Recorder on Indication Lamps	
DS1111, DS1112	Recorder on Transmitting Lamps	
DS1153, DS1154	"EMER VOICE" Lamps	
DS1155, DS1156	"VOICE LOCKED OUT" Lamps	
S1033	"EMER VOICE" Switch	Provides a means of making voice transmission over the command transmitter possible.

TABLE 1-VI LOCATION AND FUNCTION OF OPERATING CONTROLS (Cont.)

Symbol Number	Control Designation	Control Function
COMMAND ACTUATION PANEL (See figure 3-31)		
S1034	-E- Switch	
S1035	-F- Switch	
S1036	-M- Switch	
S1037	-N- Switch	
CODE OSCILLATOR (See figure 3-32)		
DS101	"POWER IND" Lamp	Glows when "POWER" switch is in the "ON" position.
F101	"FUSE"	Placed in the input side of the power transformer to provide protection against an overload condition in the code oscillator.
J3	"OUTPUT MONITOR" Jack	Provides a means of connecting high impedance headphones to code oscillator for monitoring audio output.
R6	"OUTPUT ADJ" control	Provides a means of adjusting the level of the audio output.
S101	"POWER" Switch	Applies 115VAC to the code oscillator.
S102	"TEST" Switch	Provides a means of opening or closing the audio output circuit.
UHF VOICE TRANSMITTER (See figure 3-8)		
C608	"OSC. & 1st DOUBLER" Plate Control	Provides means of tuning the oscillator and the 1st doubler plate circuits.
C621	"2nd DOUBLER PLATE" Control	Provides means of tuning the 2nd doubler plate circuit.
C629	"BUFFER AMPL PLATE" Control	Provides means of tuning the buffer amplifier plate circuit.
C804	FREQ ADJ Control	Provides a means of adjusting the oscillator frequency.
F801	"METER" Fuse	Provides protection for the "METER 2" circuitry.
F803	"BLOWER" Fuse	Provides protection for the blower circuitry.
J701	"SIDETONE OUTPUT" Jack	Provides a means of monitoring the transmitter modulation.
L902	"DRIVER GRID" Control	Provides means of tuning the driver grid circuit.

TABLE 1-VI LOCATION AND FUNCTION OF OPERATING CONTROLS (Cont.)

Symbol Number	Control Designation	Control Function
UHF VOICE TRANSMITTER (See figure 3-8) (Cont.)		
L909	"OUTPUT COUPLING" Control	Provides a means of coupling the PA output to the antenna circuitry.
M801	"METER 2"	Provides an indication of the power output, percentage of modulation, and VSWR.
M802	"METER 1"	Provides an indication of the plate and grid currents of the transmitter circuits.
R702	"CALIBRATE" Control	Provides a means of adjusting meter deflection to the "CAL" position on "METER 2".
S701	"METER 2 SELECTOR SWITCH"	Provides switching to check power output, percentage of modulation and VSWR.
S801	"TUNE-OPERATE" Switch	Normally placed in the "OPERATE" position. In "TUNE" position, power output of the PA is reduced so that preliminary tuning can be accomplished without endangering the PA tubes.
S802	"METER 1 SELECTOR SWITCH"	Provides switching to check plate and grid currents of transmitter circuits.
U901	"DRIVER PLATE" Control	Provides means of tuning the driver plate circuit.
U902	"PA GRID" Control	Provides means of tuning the PA grid circuit.
U903	"PA PLATE CONTROL"	Provides means of tuning the PA plate circuit.
	Crystal socket	Contains the crystal and oven assembly for the transmitter.
	"MAIN TUNING" Control	Enables the operator to select the desired transmitting frequency.
	Main tuning dial	Provides an indication of the selected transmitter frequency.
E401	Plate voltage on-off indicator	Glows when "PLATE" switch is placed in the "ON" position.
E402	Power Indicator	Glows when "POWER" switch is placed in the "ON" position.
J301	"MIKE" Jack	Provides means of connecting a microphone to the transmitter.

TABLE 1-VI LOCATION AND FUNCTION OF OPERATING CONTROLS (Cont.)

Symbol Number	Control Designation	Control Function
UHF VOICE TRANSMITTER (See figure 3-8) (Cont.)		
M401	AC meter	Provides an indication of the PA filament voltage and also provides an indication of the 120 volt output of the "BUCK BOOST" transformer in the power supply.
R306	"GAIN" Control	Provides a means of adjusting the percentage of modulation.
R335	"LIMITER THRESHOLD" Control	Provides a means of limiting the gain of the modulator whenever the output signal exceeds a predetermined level.
S301	"REMOTE-LOCAL" Switch	In the "REMOTE" position, the alarm relay circuit is connected; in the "LOCAL" position, the switch is not wired.
S302	"PUSH TO TALK-CARRIER ON" Switch	When in the "PUSH TO TALK" position, completes the push-to-talk relay circuit when the microphone button is pressed. In the "CARRIER ON" position, the RF carrier is "locked" on.
S303	"NARROW-BROAD" Switch	In the "NARROW" position, audio is restricted between 400 and 3000 cps; in the "BROAD" position, frequencies between 200 and 20,000 cps are passed.
S401	"PLATE ON-OFF" Switch	Energizes the plate circuits when placed in the "ON" position.
S403	"POWER ON-OFF" Switch	Energizes the filament circuits when placed in the "ON" position.
S404	"FIL-INPUT" Switch	Provides switching to check the PA filament voltage and the 120 volts of the power supply.
T104	"FIL ADJUST" Control	Provides a means of adjusting PA filament voltage.
POWER MODULATION MONITOR (See figure 3-10)		
F1	"FUSE"	Protects 115 volt power input circuit.
M1	% Modulation Meter	Provides an indication of the reflected power, incident power, modulation calibration and the percentage of modulation.
PL1	Power Alarm	Glows when transmitter output power drops below a pre-determined level.

TABLE 1-VI LOCATION AND FUNCTION OF OPERATING CONTROLS (Cont.)

Symbol Number	Control Designation	Control Function
	POWER MODULATION MONITOR (See figure 3-10)	
PL2	VSWR Alarm	Glows when VSWR level rises above a predetermined level.
PL3	Modulation Alarm	Glows when modulation drops below 50 per cent.
R8	"MODULATION CALIBRATE"	Provides a means of adjusting modulation alarm circuit.
R10	"POWER LEVEL ADJUST"	Provides a means of adjusting power alarm level.
R11	"VSWR LEVEL ADJUST"	Provides a means of adjusting VSWR alarm level.
S1	"POWER" Switch	Energizes the power modulation monitor when placed in the "ON" position.
S2	Meter Selector	Provides switching between reflected power, incident power, modulation calibration and percentage of modulation positions.
	HF VOICE TRANSMITTER (See figure 3-11)	
A8/A9	XTAL 2 indicator lamp	Glows when channel 2 crystal oven is heating.
A10/A11	XTAL 1 indicator lamp	Glows when channel 1 crystal oven is heating.
A12/A13	FIL & LOW PLATE indicator lamp	Glows when switch S4 is in the on position.
A14/A15	HIGH PLATE indicator lamp	Glows when switch S5 is in the on position.
C51	PA TUNE control	Provides a means of tuning channel 1 power amplifier plate circuit.
C51A	PA TUNE control	Provides a means of tuning channel 2 power amplifier plate circuit.
C56	ANT LOAD control	Provides a means of adjusting channel 1 power amplifier plate circuit to the antenna.
C56A	ANT LOAD control	Provides a means of adjusting channel 2 power amplifier plate circuit to the antenna.
J3	Microphone jack	Provides a means of connecting a microphone to the transmitter.
M1	TEST METER	Provides a current indication for the various positions of switch S1.
M2	PA PLATE CURRENT Meter	Provides an indication of the power amplifier plate current.

TABLE 1-VI LOCATION AND FUNCTION OF OPERATION CONTROLS (Cont.)

Symbol Number	Control Designation	Control Function
HF VOICE TRANSMITTER (See figure 3-11) (Cont.)		
M3	MOD PLATE CURRENT Meter	Provides an indication of the modulator plate current.
M4	PA PLATE VOLTAGE Meter	Provides an indication of the power amplifier plate voltage.
R22	AUDIO GAIN Control	Provides a means of adjusting the gain of the modulating signal.
S1	TEST METER SW	Switches test meter M1 into various stages for monitoring.
S2	CHANNEL SELECTOR Switch	In No. 1 position, places channel 1 exciter in operation. In No. 2 position, places channel 2 exciter in operation.
S3	MIC LINE Switch	In "MIC" position, the microphone audio is applied to the modulator. In "LINE" position, the audio from the 500/600Ω line is applied to the modulator.
S4	FIL & LOW PLATE Switch	Applies voltage to low-voltage power supplies and filament transformers.
S5	HIGH PLATE Switch	Applies voltage to high-voltage transformer.
S6	Overload Switch	Used to reset overload relay E3.
S7	Overload Switch	Used to reset overload relay E4.
SERVO AMPLIFIER (See figure 3-16)		
F101, F102	"SERVO AMPLIFIER POWER 5 AMP" fuses	Servo amplifier power protection.
F103, F104	"SERVO AMPLIFIER REFERENCE 1/4 AMP" fuses	Servo amplifier reference line protection.
M101	"ELEVATION FIELD CURRENT" meter	Amplidyne control field current monitor.
M102	"ELEVATION FIELD CURRENT" meter	Amplidyne control field current monitor.
M103	"AZIMUTH FIELD CURRENT" meter	Amplidyne control field current monitor.
M104	"AZIMUTH FIELD CURRENT" meter	Amplidyne control field current monitor.

TABLE 1-VI LOCATION AND FUNCTION OF OPERATING CONTROLS (Cont.)

Symbol Number	Control Designation	Control Function
SERVO AMPLIFIER (See figure 3-16) (Cont.)		
S101	"SERVO AMPLIFIER POWER" switch	Power "ON/OFF" switch.
S102	"SERVO AMPLIFIER REFERENCE" switch	Reference voltage "ON/OFF" switch.
	"SERVO AMPLIFIER POWER" lamp	Glows when "SERVO AMPLIFIER POWER" switch is set to "ON".
	"SERVO AMPLIFIER REFERENCE" lamp	Glows when "SERVO AMPLIFIER REFERENCE" switch is set to "ON".
SERVO CABINET (Rear Side)		
	"REMOTE REF/LOCAL REF" switch	Provides a means of switching between a remote or local reference voltage source.
CONTROL-INDICATOR (See figure 3-17)		
	Azimuth dial	Antenna azimuth position indicator.
	Azimuth handwheel	Antenna azimuth control for local mode.
CB101, CB102, CB103	"ELEVATION AMPLIDYNE" circuit breakers (3)	Elevation amplidyne circuit protection and control.
CB104, CB105, CB106	"AZIMUTH AMPLIDYNE" circuit breakers (3)	Azimuth amplidyne circuit protection and control.
DS101	"UPPER LIMIT" lamp	Elevation limit indication lamp.
DS102	"LOWER LIMIT" lamp	Elevation limit indication lamp.
DS103	"AZIMUTH CABLE WRAP NORTH" lamp	Cable wrap indication lamp.
DS104	"AZIMUTH CABLE WRAP SOUTH" lamp	Cable wrap indication lamp.
DS105	"NORTH LIMIT" lamp	Azimuth limit indication lamp.
DS106	"SOUTH LIMIT" lamp	Azimuth limit indication lamp.
	Elevation dial	Antenna elevation position indicator.
	Elevation handwheel	Antenna elevation control in local mode.
F101, F102	"FIELD POWER 3 AMP" fuses	Field power line protection.
F103, F104	"REFERENCE VOLTAGE 5 AMP" fuses	Reference voltage line protection.

TABLE 1-VI LOCATION AND FUNCTION OF OPERATING CONTROLS (Cont.)

Symbol Number	Control Designation	Control Function
	CONTROL-INDICATOR (See figure 3-17) (Cont.)	
S101	"ELEVATION LOCAL/ REMOTE" switch	Changes elevation operating mode from remote to local.
S102	"AZIMUTH LOCAL/ REMOTE" switch	Changes azimuth operating mode from remote to local.
S103	"FIELD POWER ON/ OFF" switch	Field power control.
S104	"ANTENNA SERVO RUN/ SAFETY" switch	Safety switch.
	AUDIO KEYING OSCILLATOR (See figure 3-33)	
DS1	"POWER IND" lamp	Glows when "POWER" switch is in the "ON" position.
F1	"FUSE"	Placed in the input side of the power transformer to provide protection against an overload condition in the audio keying oscillator.
R6	"OUTPUT ADJ" control	Provides a means of adjusting the level of the audio output.
R17	"SIDETONE OUTPUT ADJ" control	Provides a means of adjusting the level of the sidetone output.
S1	"POWER" switch	Applies 115 VAC to the audio keying oscillator.
S2	"TEST" switch	Provides a means of opening or closing the audio output circuit.
	PATCH AND CONTROL PANEL (See figure 3-34)	
J7	"MICROPHONE" jack	Provides a means of connecting a remote microphone to the recovery team transmitter.
J8	"TELEGRAPH KEY" jack	Provides a means of connecting a remote telegraph key to the recovery team transmitter.
R1	"MONITOR VOLUME" Control	Provides a means of adjusting the audio level.
S1	"TRANSMITTER SELECTOR" switch	Provides a means of selecting MCW, CW, or AM transmission.
S2	"RECEIVE-SEND" switch	Completes transmitter interlock circuit and completes ground path for keying circuit.

TABLE 1-VI LOCATION AND FUNCTION OF OPERATING CONTROLS (Cont.)

Symbol Number	Control Designation	Control Function
AUDIO AMPLIFIER AND LOUDSPEAKER (See figure 3-35)		
F1	"1 AMP" fuse	Placed in the input side of the power transformer to provide protection against an overload condition.
J1	Phone jack	Provides a means of monitoring the audio output.
J2	Phone jack	Provides a means of monitoring the audio output.
LS1	Speaker	Provides a means of monitoring the audio output.
S1	"SPEAKER" switch	Provides a means of connecting the speaker into the audio output circuit.
S2	"AMPLIFIER" switch	Applies 115 VAC to the audio amplifier and loudspeaker chassis.
SWR AND POWER METER (See figure 3-36)		
J1	"INPUT" jack	Provides a means of connecting the transmitter output to the SWR and power meter input.
J2	"OUTPUT" jack	Provides a means of connecting the SWR and power meter output to the antenna tuner input.
M1	Meter	Provides an indication of transmitter power output and SWR.
R19	"ADJUST" control	Provides a means of calibrating meter M1.
S1	Selector switch	Position — Function "POWER" — RF output of transmitter is fed to 50-ohm dummy load inside SWR and power meter. "ADJUST" — Meter is ready for calibration prior to taking SWR reading. "SWR" — Meter indicates voltage to standing wave ratio. "OPERATE" — SWR and power meter not in use; signal is fed straight through to antenna tuner.

TABLE 1-VI LOCATION AND FUNCTION OF OPERATING CONTROLS (Cont.)

Symbol Number	Control Designation	Control Function
ANTENNA TUNER (See figure 3-37)		
L4	10-20 MC tuning control	Provides a means of adjusting the antenna to resonance in the 10 to 20 megacycle range.
L5	Coupling control	Provides a means of adjusting the impedance ratio between the antenna and the PA tank circuit.
L6	2-10 MC tuning control	Provides a means of adjusting the antenna to resonance in the 2 to 10 megacycle range.
M4	"ANTENNA CURRENT" meter	Provides an RF current indication of the antenna and antenna loading circuit.
S9	Band selector switch	Provides a means of selecting "2-10 MC", "LONG WIRE", or "10-20 MC" coil taps of the antenna tuner.

1-4. SITE IMPLEMENTATION

A. GENERAL

(1). The sixteen Mercury sites at which capsule communication equipment is located fall into the following four general classifications:

(a). Six Command Sites

Cape Canaveral, Florida
Bermuda
Muchea, Australia
Kauai Island, Hawaii
Pt. Arguello, California
Guaymas, Mexico

(b). Two Down-Range Sites

Grand Bahama Island
Grand Turk Island

(c). Two Shipboard Sites

Atlantic Ship
Indian Ocean Ship

(d). Six Standard Sites

Grand Canary Island
Kano, Nigeria
Zanzibar
Woomera, Australia
Canton, Island
Corpus Christi, Texas

(2). The command sites are unique in that they are equipped with triple-rack communication technician's consoles, but otherwise major differences in implementation among the four categories are in the number and types of antenna assemblies. This is shown diagramatically in figures 1-3 and 1-4. Other differences are caused by the presence or absence of a transmitter van, and the presence at three sites of a standby HF voice transmitter. The distance separating the communication technician's console and the voice receiver rack affects the number of line amplifiers required and at four sites necessitates the addition of a special +65 VDC power supply for certain control voltages. The function and quantity of line amplifiers that are used at each site are listed in table 1-VII.

(3). Transmitter vans are located at ten sites: Cape Canaveral, Muchea, Kauai, Guaymas, and the six standard sites. There are five major variations in the equipment implementation of the vans. These are shown in figures 1-16 through 1-20.

(4). Other minor differences in site implementation can be determined from table 1-VIII, which shows the quantity of each piece of equipment at each of the sites. A brief discussion of each site and the points which make that site unique follows. Site layout drawings and equipment placement drawings are included for orientation purposes.

B. CAPE CANAVERAL, FLORIDA

(1). SITE LAYOUT

(a). The capsule communications equipment at Cape Canaveral (see figure 1-28) is located at three areas: the Mercury Control Center Building (Tel. 3), the Receiver Building No. 2 (Tel. 2), and the command control transmitter area. A triple rack communication technician's console and a voice receiver rack are housed in the Mercury Control Center Building. The transmitter

TABLE 1-VII. FUNCTIONS AND QUANTITIES OF LINE AMPLIFIERS USED AT EACH SITE

Function	Cape Canaveral, Florida	Grand Bahama Island	Grand Turk Island	Bermuda	Atlantic Ship	Grand Canary Island	Kano, Nigeria	Zanzibar	Indian Ocean Ship	Muchea, Australia	Woomera, Australia	Canton Island	Kauai Island, Hawaii	Point Arguello, California	Guaymas, Mexico	Corpus Christi, Texas
UHF Voice Receiver Audio Output	1			2										2		
Diversity Combiner Audio Output				1										1		
HF Voice-Receiver Audio Output				2										2		
UHF Voice Transmitter Microphone Audio (Master and Standby)						2	2	2		2	2	2	2	2	2	2
UHF Voice Transmitter Sidetone Audio (Master and Standby)						2	2	2		2	2	2	2	2	2	2
HF Voice Transmitter Sidetone Audio	1	1	1	1	1	1	1	1	1	1	1	1	1	1	1	1
Total Line Amplifiers Used at Site	2	1	1	6	1	5	5	5	1	5	5	5	5	10	5	5

Table 1-VIII Site Implementation

Equipment	Manufacturer	Model	Cape Canaveral, Florida	Grand Bahama Island	Grand Turk Island	Bermuda	Atlantic Ship	Grand Canary Island	Kano, Nigeria	Zanzibar	Indian Ocean Ship	Muchea, Australia	Woomera, Australia	Canton Island	Kauai Island, Hawaii	Point Arguello, California	Guaymas, Mexico	Corpus Christi, Texas
ANTENNA EQUIPMENT																		
Pedestal (with) RH Quad-Helix Array	MP-81/SCR-584 (Modified)					1	1	1			1	1	1		1		1	1
	Cubic					1	1	1			1	1	1		1		1	1
Pedestal (with) RH Quad-Helix Array	Canoga	8417		1	1				1	1				1		1		
	Cubic			1	1				1	1				1		1		
Pedestal (with) LH Quad-Helix Array	Canoga	8417		1	1	1	1	2	2	2	1		2	2		1		2
	Cubic			1	1	1	1	2	2	2	1		2	2		1		2
Pedestal (with) LH and Command Quad-Helix Array	Canoga	8417 w/rotary joint	1			2						2			2	1	2	
	Cubic		1			2						2			2	1	2	
HF Dipole Antenna	Telrex	XA-1/312/15-30	2															
Triplexer	Rantec Cubic	MT-395	2	1	1	2	2	2	2	2	2	2	2	2	2	2	2	2
Preamplifier	Nems-Clark	PR203-S	2	1	1	2	2	2	2	2	2	2	2	2	2	2	2	2
TRANSMITTING EQUIPMENT																		
HF Voice Transmitter	Gates	CS-2029	2	1	2	2	1	1	1	1	1	1	1	1	1	1	1	1
HF Monitor Rack	Bendix Radio	N651494	1	1	1	1	1	1	1	1	1	1	1	1	1	1	1	1
Line Amplifier	Bendix Radio	BXR-LA200	1	1	1	1	1	1	1	1	1	1	1	1	1	1	1	1
Dummy Load	M.C. Jones	636.14	1	1	1	1	1	1	1	1	1	1	1	1	1	1	1	1
Patch Panel	Technical Material Corp.	QDP6SP10-3	1	1	1	1	1	1	1	1	1	1	1	1	1	1	1	1
Directional Coupler	M.C. Jones	263.14	1	1	1	1	1	1	1	1	1	1	1	1	1	1	1	1
Power Modulation Monitor	M.C. Jones	SG-41.1	1	1	1	1	1	1	1	1	1	1	1	1	1	1	1	1
HF Transmitter Band-pass Filter	Applied Research, Inc.	HFF-3					2				2							
UHF Transmitter Rack	Bendix Radio	N651479	1	1	1	1	1	1	1	1	1	1	1	1	1	1	1	1
UHF Voice Transmitter	Radio Receptor	AN/GRT-3	2	2	2	2	2	2	2	2	2	2	2	2	2	2	2	2
Power Modulation Monitor	M.C. Jones	SG-41.2	1	1	1	1	1	1	1	1	1	1	1	1	1	1	1	1
Directional Coupler	M.C. Jones	576FV	1	1	1	1	1	1	1	1	1	1	1	1	1	1	1	1
Dummy Load	M.C. Jones	636.14	1	1	1	1	1	1	1	1	1	1	1	1	1	1	1	1
Coaxial Switch	Transco	Type Y 11800	1	1	1	1	1	1	1	1	1	1	1	1	1	1	1	1
RECEIVING EQUIPMENT																		
Voice Receiver Rack (Single Rack)	Bendix Radio	N651496	1															
Voice Receiver Rack (Double Rack)	Bendix Radio	N651495	1	1	1	1	1	1	1	1	1	1	1	1	1	1	1	1
UHF Voice Receiver	Collins	R-278B/GR	3	2	2	2	2	2	2	2	2	2	2	2	2	2	2	2
HF Voice Receiver	GFE	R-390A/URR	2	2	2	2	2	2	2	2	2	2	2	2	2	2	2	2
Diversity Combiner	Bendix Radio	BXR DDU-100				1	1	1	1	1	1	1	1	1	1	1	1	1
Distribution Panel		J-390/GR	2	1	1	1	1	1	1	1	1	1	1	1	1	1	1	1
HF/UHF Signal Generator	Bendix Radio	BXR SG-300	2	1	1	1	1	1	1	1	1	1	1	1	1	1	1	1
Preamp Control Panel	Nems Clark		2	1	1	2	2	2	2	2	2	2	2	2	2	2	2	2
Antenna Switch Panel	Bendix Radio	N654980-1	2	2	2	2	2	2	2	2	2	2	2	2	2	2	2	2
HF Voice Receiver Bandpass Filter	Applied Research	HFF-D					2				2							
Intercommunications Panel	Bendix Radio	N654990	1															
Intercommunications Panel (Special)	Bendix Radio	N654990		1	1													
Dual Speaker Panel	Bendix Radio	R654919-1	2	1	1	1	1	1	1	1	1	1	1	1	1	1	1	1
Dual-Track Tape Recorder	Magnacord	728	1			*	1	1	1	1	1	1	1	1	1	1	1	1

* (1) Housed in Terminal Equipment Rack

Table 1-VIII Site Implementation (Continued)

Equipment	Manufacturer	Model	Cape Canaveral, Florida	Grand Bahama Island	Grand Turk Island	Bermuda	Atlantic Ship	Grand Canary Island	Kano, Nigeria	Zanzibar	Indian Ocean Ship	Muchea, Australia	Woomera, Australia	Canton Island	Kauai Island, Hawaii	Point Arguello, California	Guaymas, Mexico	Corpus Christi, Texas
RECEIVING EQUIPMENT (Cont.)																		
14-Track Tape Recorder	Ampex	FR-114B	1			1	1	1	1	1	1	1	1	1	1	1	1	1
CONSOLE EQUIPMENT																		
Communication Technician's Console (Double Rack) BXR-CTC500	Bendix Radio	R651466-1		1														
		R651466-2			1													
		R651466-3					1				1							
		R651466-4						1										
		R651466-5							1	1			1					1
		R651466-6												1				
Communication Technician's Console (Triple Rack) BXR-CTC500	Bendix Radio	R651480-1	1															
		R651480-2				1												
		R651480-3										1					1	
		R651480-4													1			
		R651480-5														1		
Dual Power Supply	Bendix Radio	R651470-1	1	1	1	1	1	1	1	1	1	1	1	1	1	1	1	1
Special Power Supply	Bendix Radio	A683691-1	1	1		1										1		
Intercommunication Panel	Bendix Radio	N654990	1			1	1	1	1	1	1	1	1	1	1	1	1	1
Intercommunication Panel (Special)	Bendix Radio	N654990		1	1													
Volume Level Indicator	Daven	924-C	1	1	1	1	1	1	1	1	1	1	1	1	1	1	1	1
Line Amplifier	Bendix Radio	BXR-LA200	1			5		4	4	4		4	4	4	4	9	4	4
HF Voice Microphone Preamplifier	Gates	M5167	2	1	2	2	1	1	1	1	1	1	1	1	1	1	1	1
RECOVERY TEAM COMMUNICATIONS EQUIPMENT																		
Recovery Team Console	Bendix Radio	651446-1						1										
AC Power Control Panel	Bendix Radio	L654931-1						1										
Microphone Amplifier	Gates	M5167 (Modified)						1										
Audio Amplifier	Cubic	D18598 (Modified)						1										
Receiver		R-390A/URR						1										
Patch and Control Panel	Bendix Radio	653727-1						1										
Audio Keying Oscillator	Bendix Radio	BXR MCO-400A						1										
Communications Transmitter	Gates	CS-2199 (Modified)						1										
RF Tuner		TN-339/GR						1										
VSWR Power Meter		BE-165/G						1										
Whip Antenna	Premax Products	SS-1135																
TEST EQUIPMENT																		
Adjustable Attenuator	General Radio	874-GA	1	1	1	1	1	1	1	1	1	1	1	1	1	1	1	1
Antenna Equipment	Empire Devices	LM 105					1	1	1	1	1	1	1	1			1	1
Attenuator Assembly	Ortho	Type V7 & 8				2	1	1	1	1	1	1	1	1	1	1	1	1
Attenuator Pad	Telonic	TGC-50	2	2	2	2	2	2	2	2	2	2	2	2	2	2	2	2
Coaxial Attenuator	Empire Devices	AT-50-6	2	2	2	2	2	2	2	2	2	2	2	2	2	2	2	2
Dipole Antenna Set (20-200 MC)	Empire Devices	DM 105-T1					1	1	1	1	1	1	1	1			1	1
Dipole Antenna Set (200-400 MC)	Empire Devices	DM 105-T3					1	1	1	1	1	1	1	1			1	1
Electronic Counter	Beckman	7370	1	1	1	1	1	1	1	1	1	1	1	1	1	1	1	1
Frequency Converter	Beckman	7571 and 7573	1	1	1	1	1	1	1	1	1	1	1	1	1	1	1	1
Insulation Tester	J.C. Biddle	7679 ARK	1			1	1	1	1	1	1	1	1	1	1	1	1	1
Line Bridging Transformer	Hewlett Packard	AC-60B	1	1	1	1	1	1	1	1	1	1	1	1	1	1	1	1

Table 1-VIII Site Implementation (Continued)

Equipment	Manufacturer	Model	Cape Canaveral, Florida	Grand Bahama Island	Grand Turk Island	Bermuda	Atlantic Ship	Grand Canary Island	Kano, Nigeria	Zanzibar	Indian Ocean Ship	Muchea, Australia	Woomera, Australia	Canton Island	Kauai Island, Hawaii	Point Arguello, California	Guaymas, Mexico	Corpus Christi, Texas
TEST EQUIPMENT (Cont.)																		
Noise and Distortion Analyzer	Hewlett Packard	330B	1	1	1	1	1	1	1	1	1	1	1	1	1	1	1	1
Noise and Field Intensity Meter	Empire Devices	NF 105					1	1	1	1	1	1	1	1			1	1
Noise Figure Meter	Airborne Instruments Laboratory	07414	1	1	1											1		
Noise Source (10-250 MC)	Airborne Instruments Laboratory	Type 07006	1	1	1											1		
Noise Source Power Supply	Airborne Instruments	Type 71	1	1	1	2		1				1			1	2	1	1
Oscilloscope	Hewlett Packard	130B	1	1	1	1	1	1	1	1	1	1	1	1	1	1	1	1
Output Power Meter	Daven	OP 962	1	1	1	1	1	1	1	1	1	1	1	1	1	1	1	1
Recording Accessories			1			1	1	1	1	1	1	1	1	1	1	1	1	1
Recording Voltmeter	General Electric	99X950	1	1	1	1	1	1	1	1	1	1	1	1	1	1	1	1
RF Load Resistor	M.C. Jones	636-14	2	2	2	2	2	2	2	2	2	2	2	2	2	2	2	2
RF Signal Generator	Boonton	225A	1	1	1	2	1	1	1	1	1	1	1	1	1	2	1	1
Signal Generator	Hewlett Packard	606A	1	1	1	1	1	1	1	1	1	1	1	1	1	1	1	1
Spectrum Analyzer	Polarad	TSA (STU-1)					1		1	1	1		1	1				
Tube Tester	Triplett	3444	1	1	1	1	1	1	1	1	1	1	1	1	1	1	1	1
UHF Admittance Meter and Accessories	General Radio	1602-B	1	1	1	1	1	1	1	1	1	1	1	1	1	1	1	1
Unit Oscillator	General Radio	1209-BL	1	1	1	1	1	1	1	1	1	1	1	1	1	1	1	1
Unit Oscillator	General Radio	1214A	1	1	1											1		
Unit Regulated Power Supply	General Radio	1201-B	1	1	1	1	1	1	1	1	1	1	1	1	1	1	1	1
Vacuum Tube Voltmeter	Hewlett Packard	410B	2	1	1	4	2	3	2	2	2	3	2	2	3	3	3	3
Vacuum Tube Voltmeter AC	Hewlett Packard	400D/H/L	2	1	1	3	2	2	2	2	2	2	2	2	2	2	2	2
Thermistor Mount	Hewlett Packard	477B				2												
Volt-Ohmmeter	Triplett	630 PL	3	3	3	6	3	5	3	3	3	6	3	3	5	5	6	5
Wide Range Oscillator	Hewlett Packard	200CD	2	1	1	2	1	2	2	2	1	2	2	2	2	2	2	2

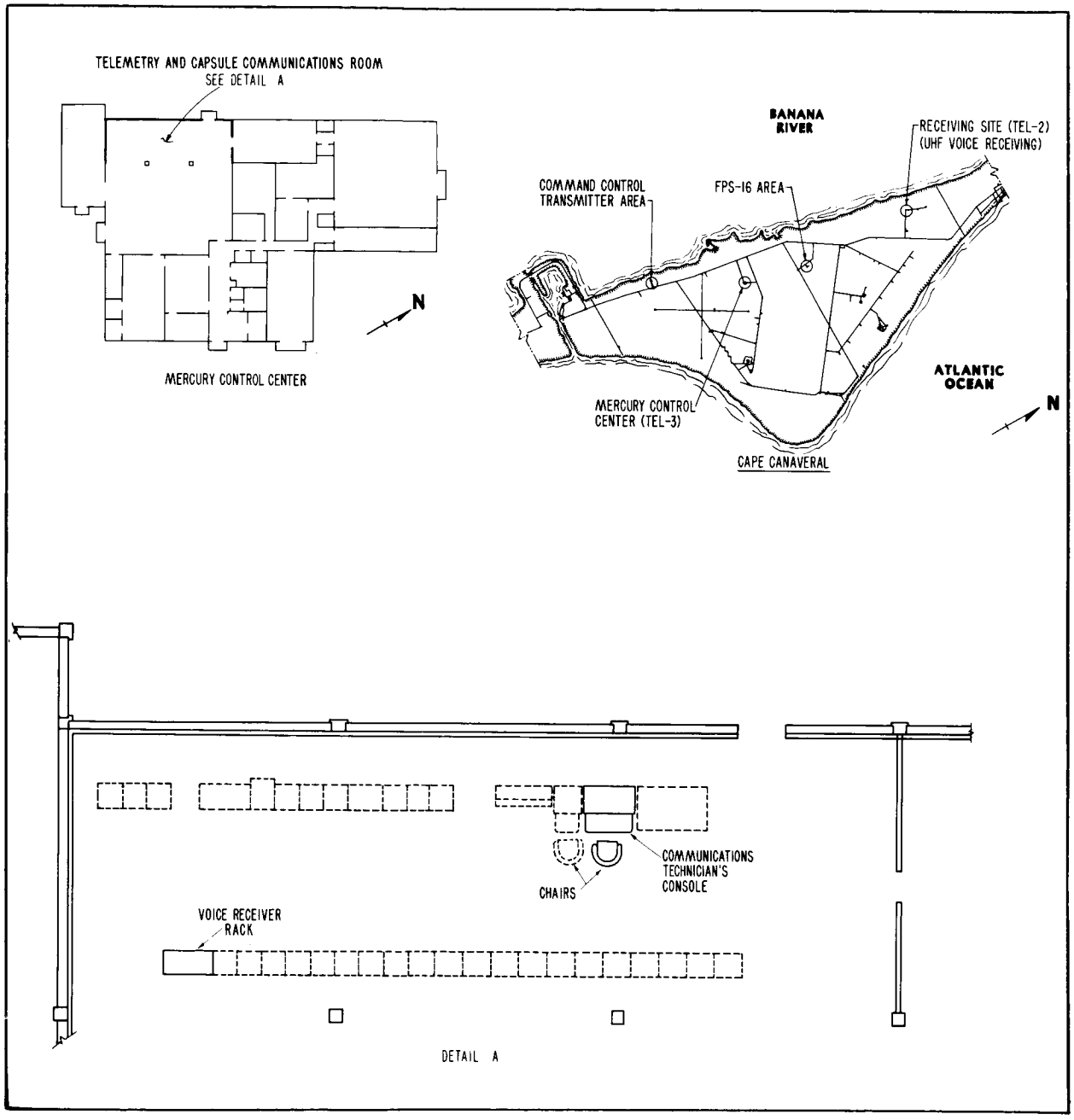

Figure 1-28. Cape Canaveral, Site Locations and Mercury Control Center Equipment Placement

van is stationed beside the voice and command transmitting antenna at the command control transmitter area. This van (see figure 1-19) holds the UHF transmitter rack, two HF voice transmitters, the HF monitor rack and the servo rack for the voice and command transmitting antenna. It also houses the synchro-remoting transmitter-receiver (associated with the acquisition system), and the interphone rack, a part of the intercommunications system.

(2). SPECIAL FEATURES

Major areas in which the Cape Canaveral implementation differs from that of a standard site are as follows:

(a). UHF voice receiver No. 3 is located, with its associated equipment, in a separate rack at Receiver Building No. 2

(b). A line amplifier is located in the communication technician's console to amplify audio from receiver No. 3

(c). A standby HF transmitter is located in the transmitter van

(d). A down-range control panel is located in upper left-hand corner of communication technician's console

(e). TLM-18 antennas are used for UHF voice transmitting and receiving.

C. GRAND BAHAMA ISLAND

(1). SITE LAYOUT

(a). Capsule communication equipment at Grand Bahama Island is located in two different areas, the receiver building and the transmitter building, approximately six miles apart (see figure 1-29). The voice transmitting equipment is housed in the transmitter room in the south corner of the transmitter building. This equipment consists of a UHF transmitter rack, a single HF transmitter, the HF monitor rack, and the servo rack for the voice transmitting antenna. The antenna is located 18 feet from the transmitter building. It is a standard voice transmitting array consisting of a UHF, left-hand quad-helix and an HF dipole and reflector mounted on a Canoga No. 8417 pedestal.

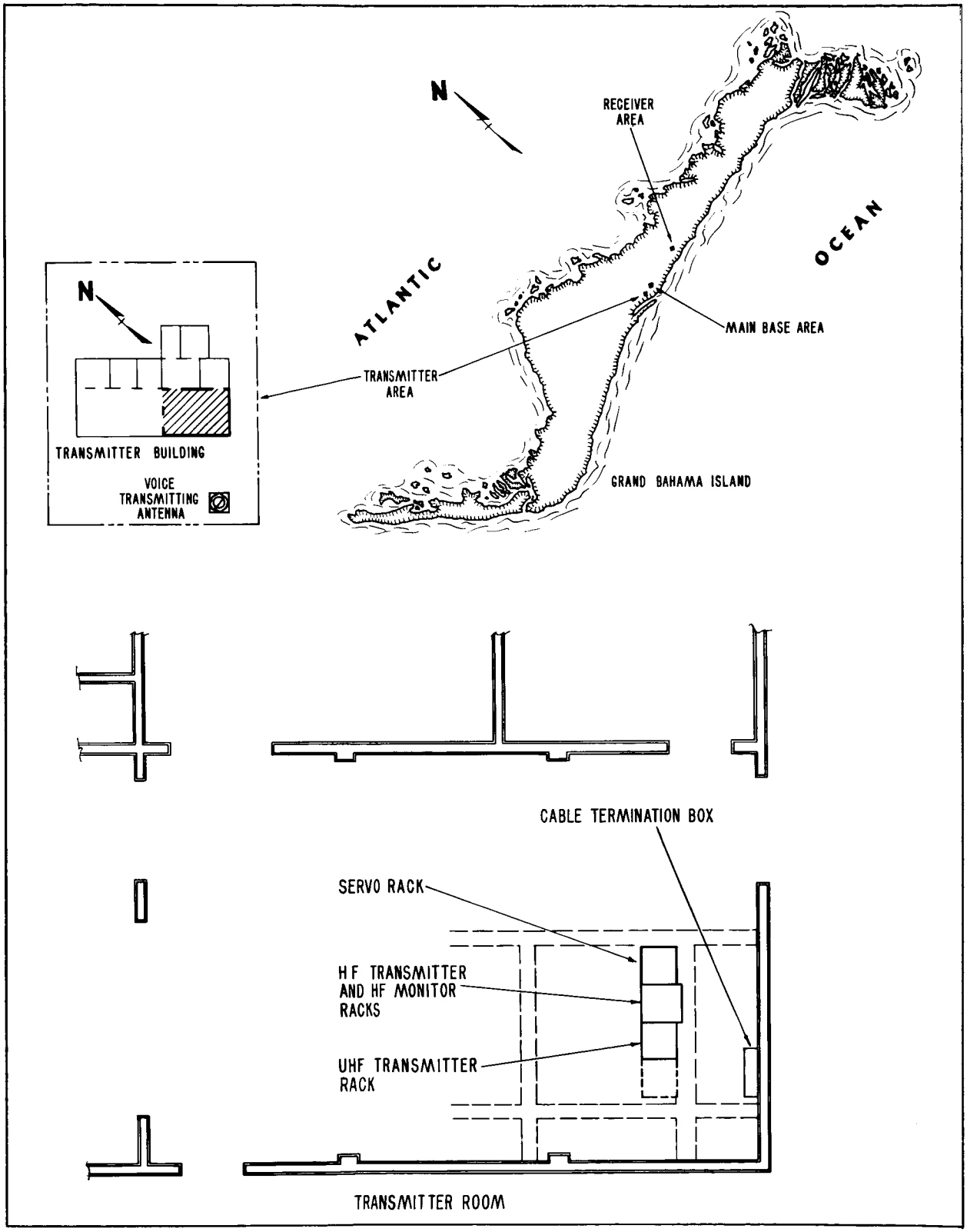

Figure 1-29. Grand Bahama Island, Site Location and Transmitter Room Equipment Placement

(b). The voice receiving equipment is located in the telemetry room (see figure 1-30) of the receiver building. The double-rack communication technician's console, voice receiver rack, and receiving antenna servo rack comprise the voice receiving equipment. The receiving antenna is located approximately 22 feet from the receiver building. It is identical to receiving antenna No. 1 of other sites, being made up of a UHF right-hand quad-helix array and the HF dipoles. Since there is but a single antenna assembly, the receivers are used as a master and a stand by, diversity reception is not possible on either frequency.

(2). SPECIAL FEATURES

(a). Major areas in which the Grand Bahama Island site differs from standard sites are as follows:

1. A transmitter van is not supplied; transmitting equipment is located in the transmitter building

2. The range control status panel replaces the line monitor jack panel in the upper left-hand corner of the communication technician's console. This panel incorporates the functions of the line monitor jack panel

3. The voice receiver rack contains no tape recorder, no diversity combiner, and only one preamplifier control panel. A special intercommunications panel is used

4. Only two antenna assemblies are used, one for voice receiving and one for voice transmitting

5. A +65 VDC power supply is used to supply certain control voltages

6. No line amplifiers are used in the communication technician's console.

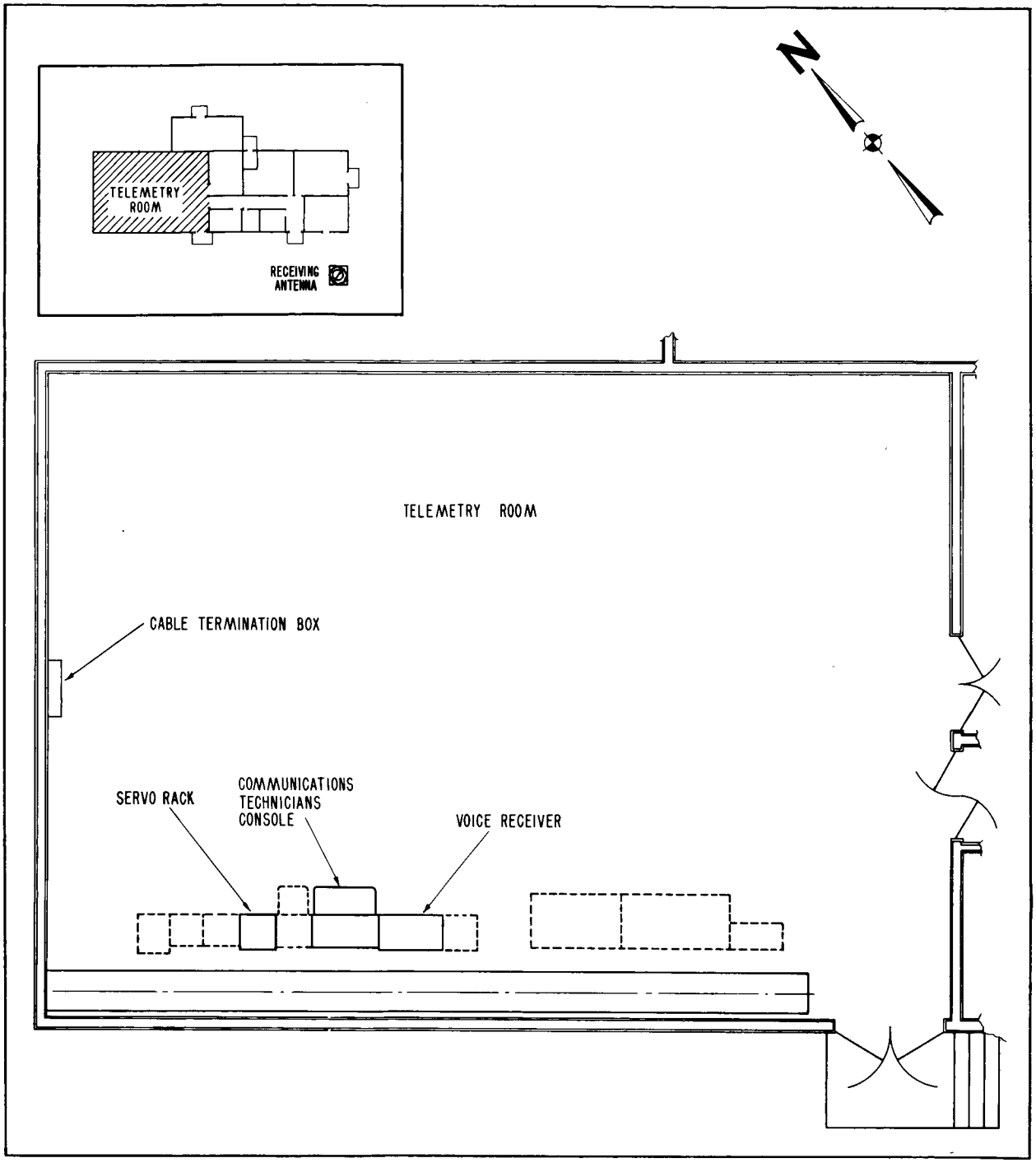

Figure 1-30. Grand Bahama Island, Telemetry Room Equipment Placement

D. GRAND TURK ISLAND

(1). SITE LAYOUT

(a). The receiver and transmitter areas at Grand Turk Island are located approximately one mile apart. A transmitter van is not used at the site; voice transmitting equipment is housed within the transmitter building (see figure 1-31). This equipment consists of the UHF transmitter rack, two HF transmitters, one HF monitor rack, and the servo rack for the voice transmitter antenna. The antenna is a standard UHF left-hand quad-helix and HF dipole mounted on a Canoga No. 8417 antenna pedestal. It is located approximately 92 feet to the north of the transmitter building.

(b). The receiving equipment is located in the telemetry room (see figure 1-32) in the receiver building. Equipment consists of the voice receiver rack and the communication technician's console. The receiving antenna is a standard UHF right-hand quad-helix and HF dipole mounted on an AN/SCR-584 antenna pedestal. It is located about 70 feet south of the receiver building. Diversity reception is not possible with a single antenna, so the receivers are used in a master standby relationship.

(2). SPECIAL FEATURES

(a). Major areas in which the Grand Turk site differs from a standard site are as follows:

1. A transmitter van is not supplied; transmitting equipment is located in the transmitter building

2. Two HF transmitters are supplied

3. The range control status panel replaces the line monitor jack panel in the upper left-hand corner of the communication technician's panel. This panel incorporates the functions of the line monitor jack panel

4. The voice receiver rack contains no tape recorder, no diversity combiner and only one preamplifier control panel. A special intercommunications panel is supplied

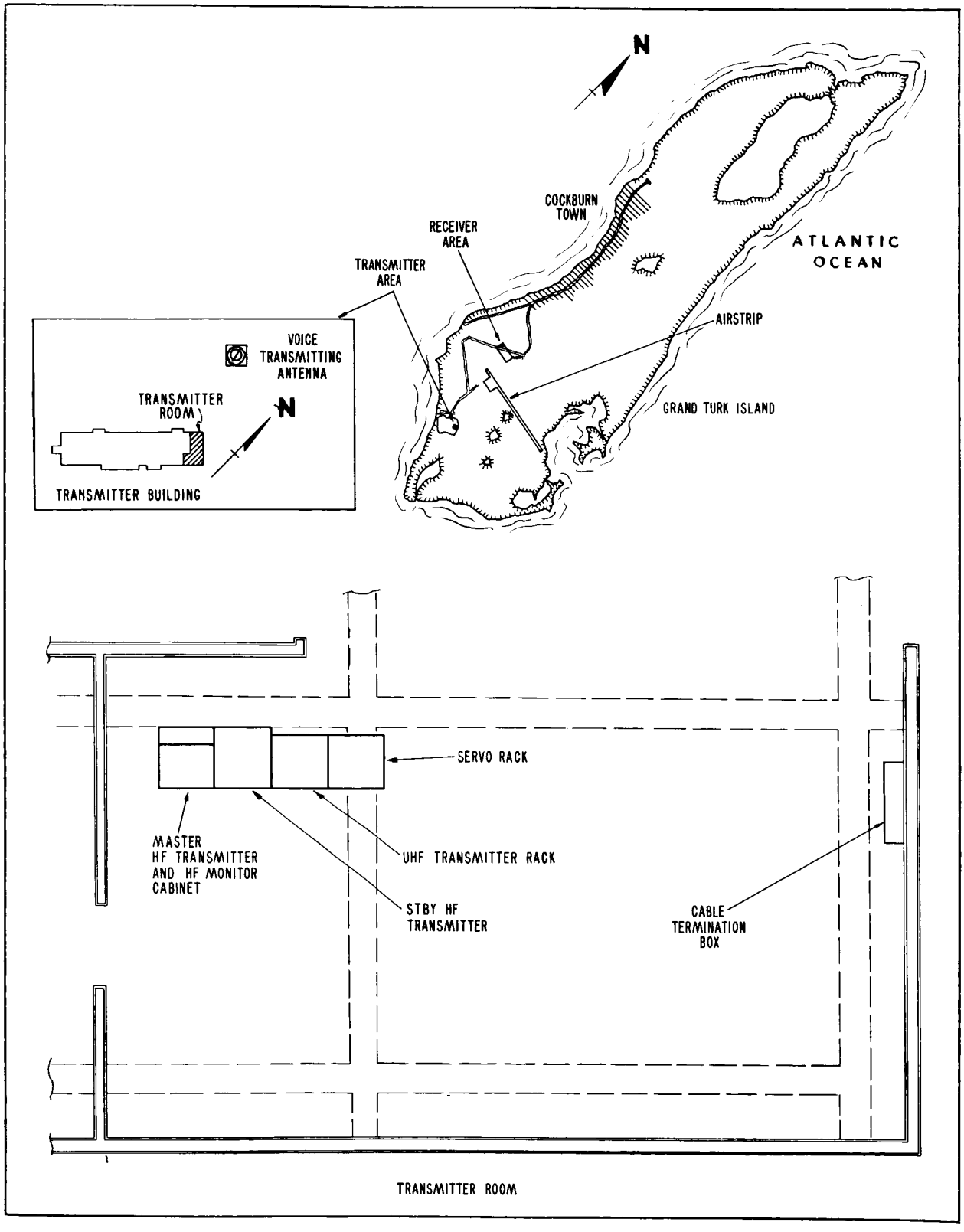

Figure 1-31. Grand Turk Island, Transmitter Room Equipment Placement

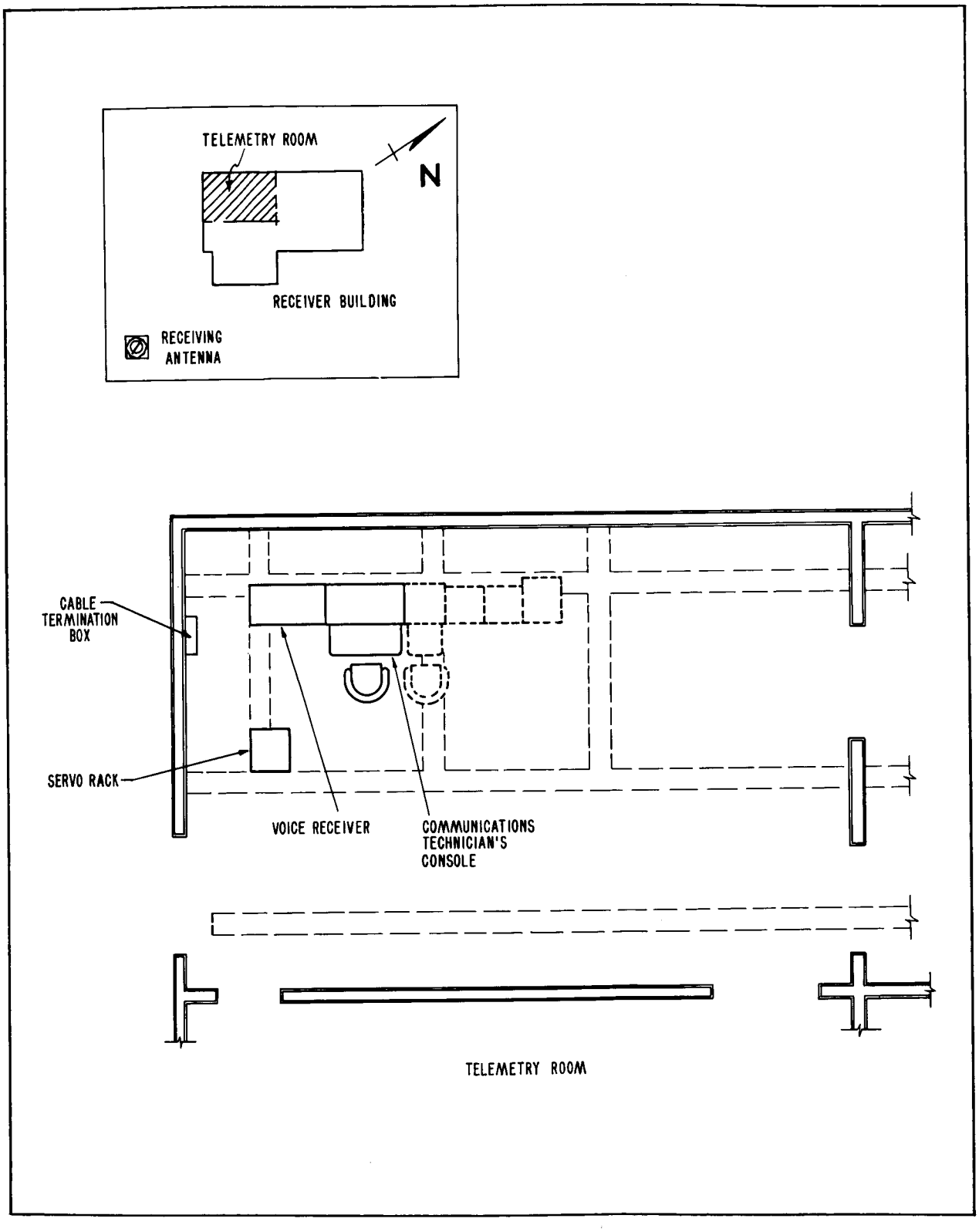

Figure 1-32. Grand Turk Island, Telemetry Room Equipment Placement

5. Only two antenna assemblies are used, one for voice receiving and one for voice transmitting

E. BERMUDA

(1). SITE LAYOUT

(a). Capsule communication equipment at Bermuda is located at two sites: voice receiving equipment is housed in the receiver building at Town Hill (see figure 1-33); voice transmitting equipment is located in the transmitter room of the control center building (see figure 1-34) on Cooper's Island 6-miles away. A transmitter van is not used. The voice receiver rack and a servo rack for each of the voice receiving antennas are the only voice communications equipment located in the receiver building. Standard voice receiving antenna No. 1 is located approximately 20 feet to the south of the receiver building; standard receiving antenna No. 2 is 50 feet to the northwest.

(b). The communication technician's console is located in the transmitter room along with the UHF transmitter rack, two HF transmitters, the HF monitor rack, and the servo racks for the two transmitting antennas. Two voice and command transmitting antennas are used at Bermuda. Antenna No. 2, located to the west of the transmitter room, is normally connected to the UHF and HF master voice transmitters. Antenna No. 1 is connected to the standby voice transmitters. This can be reversed by means of coaxial relays operated from the communication technician's console.

(2). SPECIAL FEATURES

(a). Major areas in which the Bermuda site implementation differs from that of a standard site are as follows:

1. A transmitter van is not supplied; transmitting equipment is located in the control center building

2. The communication technician's console is located near the transmitting equipment rather than near the receiving equipment. This necessitates the addition of four audio line

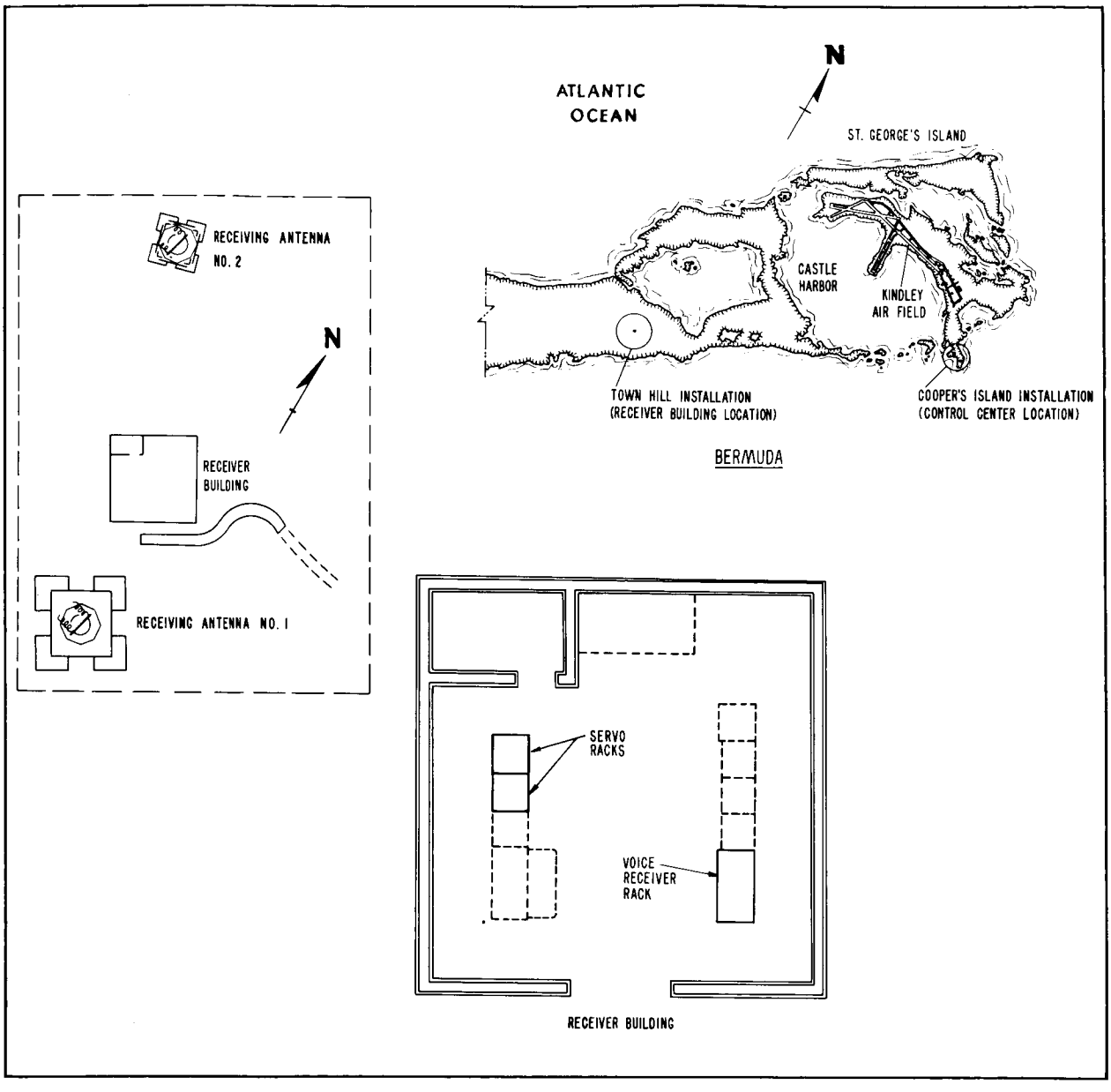

Figure 1-33. Bermuda, Receiver Building Equipment Placement

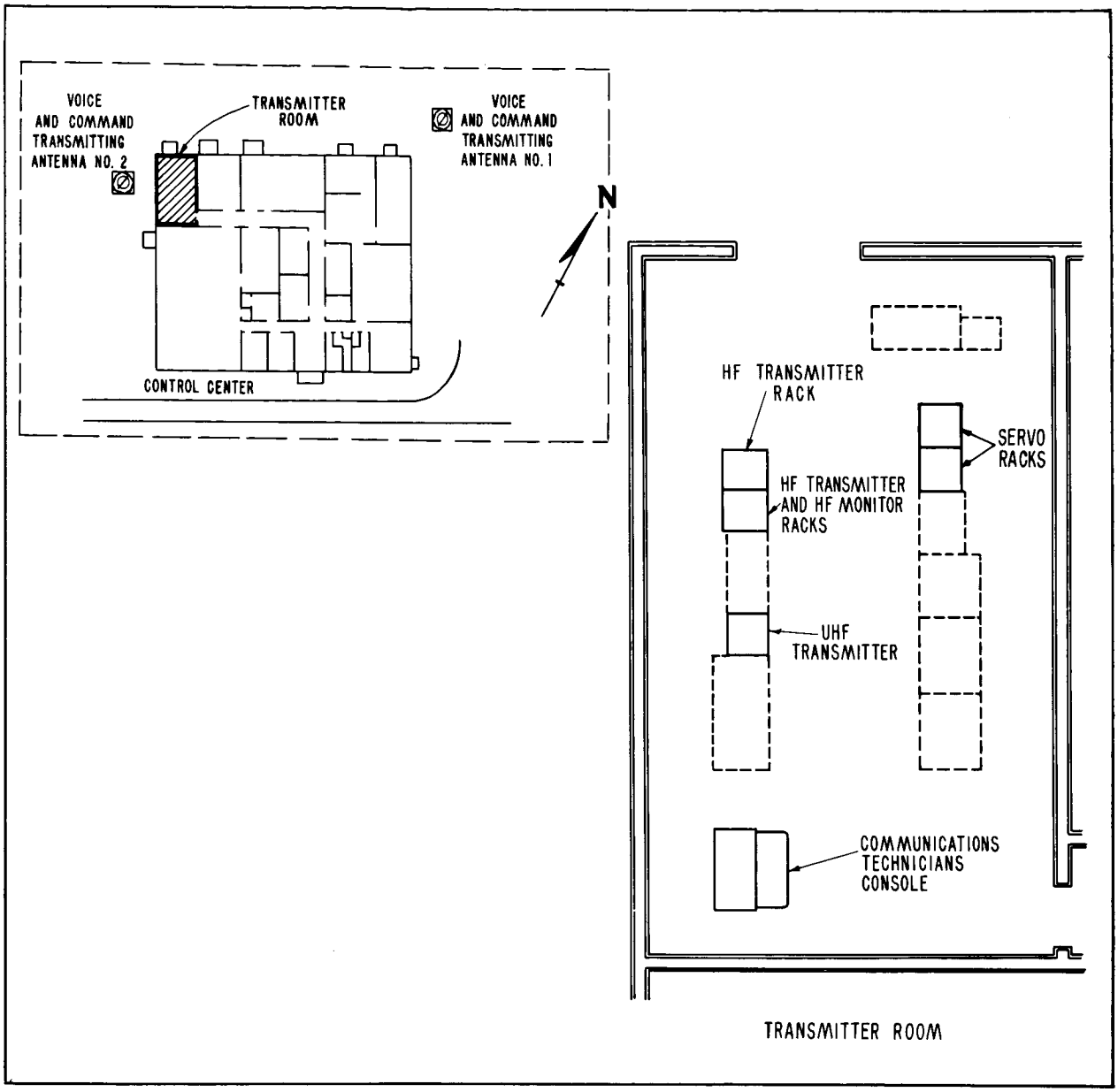

Figure 1-34. Bermuda, Transmitter Room Equipment Placement

amplifiers in the console, one for the audio from each HF receiver and each UHF receiver. Line amplifiers are not used for transmitter sidetones or microphone audio. A triple-rack console is used to provide room for the command system equipment

3. A +65 VDC power supply is used to furnish certain control voltages

4. Two HF transmitters are supplied

5. Four antenna assemblies are supplied for voice communications: one receiving antenna No. 1, one receiving antenna No. 2, and two voice and command transmitting antennas. Another antenna, identical to the UHF portion of receiving antenna No. 1, is located near the FPS-16 radar building. This antenna is used only for the acquisition system.

6. The dual-track tape recorder is located in the terminal equipment rack instead of in the voice receiver rack. This is necessary because of the distance separating the voice receiver rack and the communication technician's console. The terminal equipment rack is located in the transmitter room.

F. ATLANTIC SHIP AND INDIAN OCEAN SHIP

(1). SITE LAYOUT

(a). The capsule communication equipment aboard the two ships is located in the telemetry room in the No. 3 hold and in the transmitter equipment area on the second deck (see figure 1-35). The receiving antenna (corresponding to receiving antenna No. 1) is located amidships on the mainmast. The voice transmitting and receiving antenna is located on the kingpost abaft the deckhouse. The telemetry room (figure 1-36) holds the communication technician's console, the voice receiver rack, and the servo rack for the receiving antenna. The UHF transmitter rack, HF transmitter, HF monitor rack, and servo rack for the voice receiving and transmitting antenna are located in the transmitter area (figure 1-37).

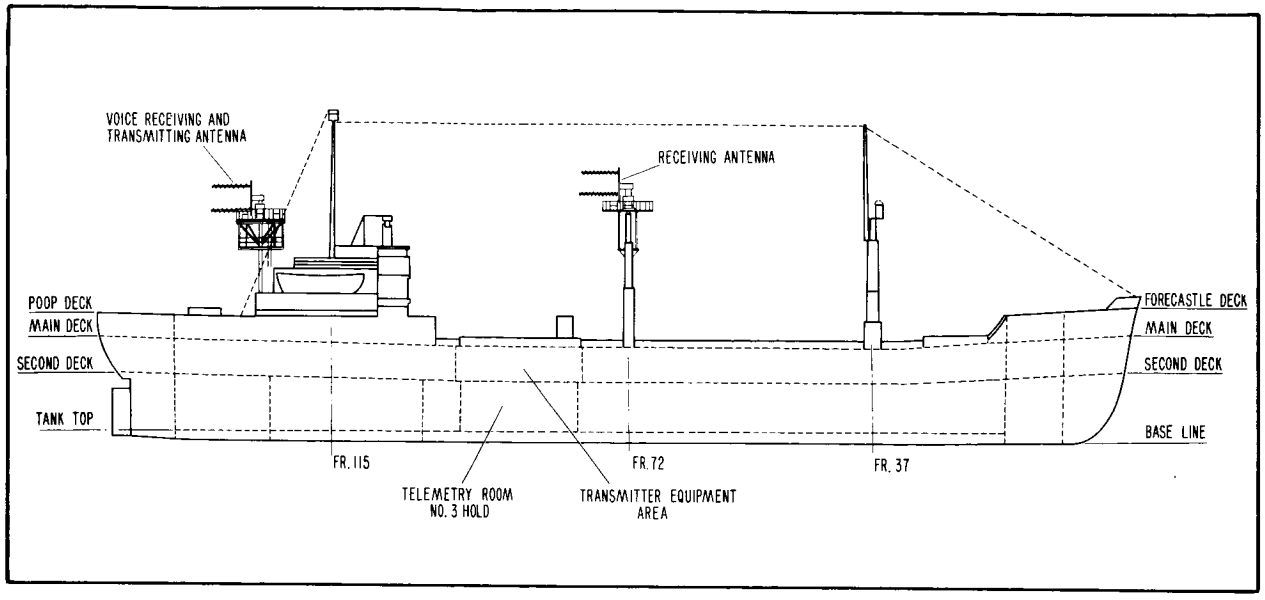

Figure 1-35. Atlantic and Indian Ocean Ships, Equipment Area Locations

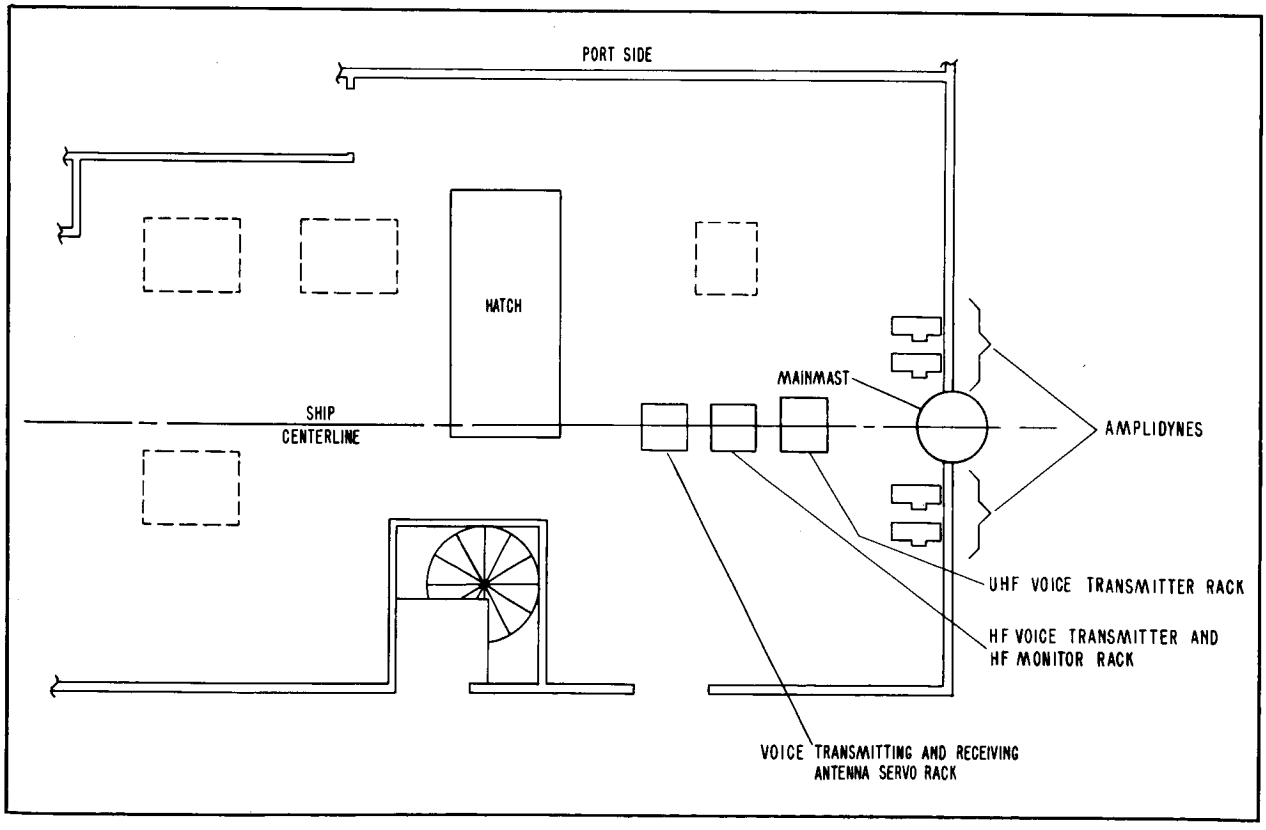

Figure 1-36. Atlantic and Indian Ocean Ships, Transmitter Area Equipment Placements

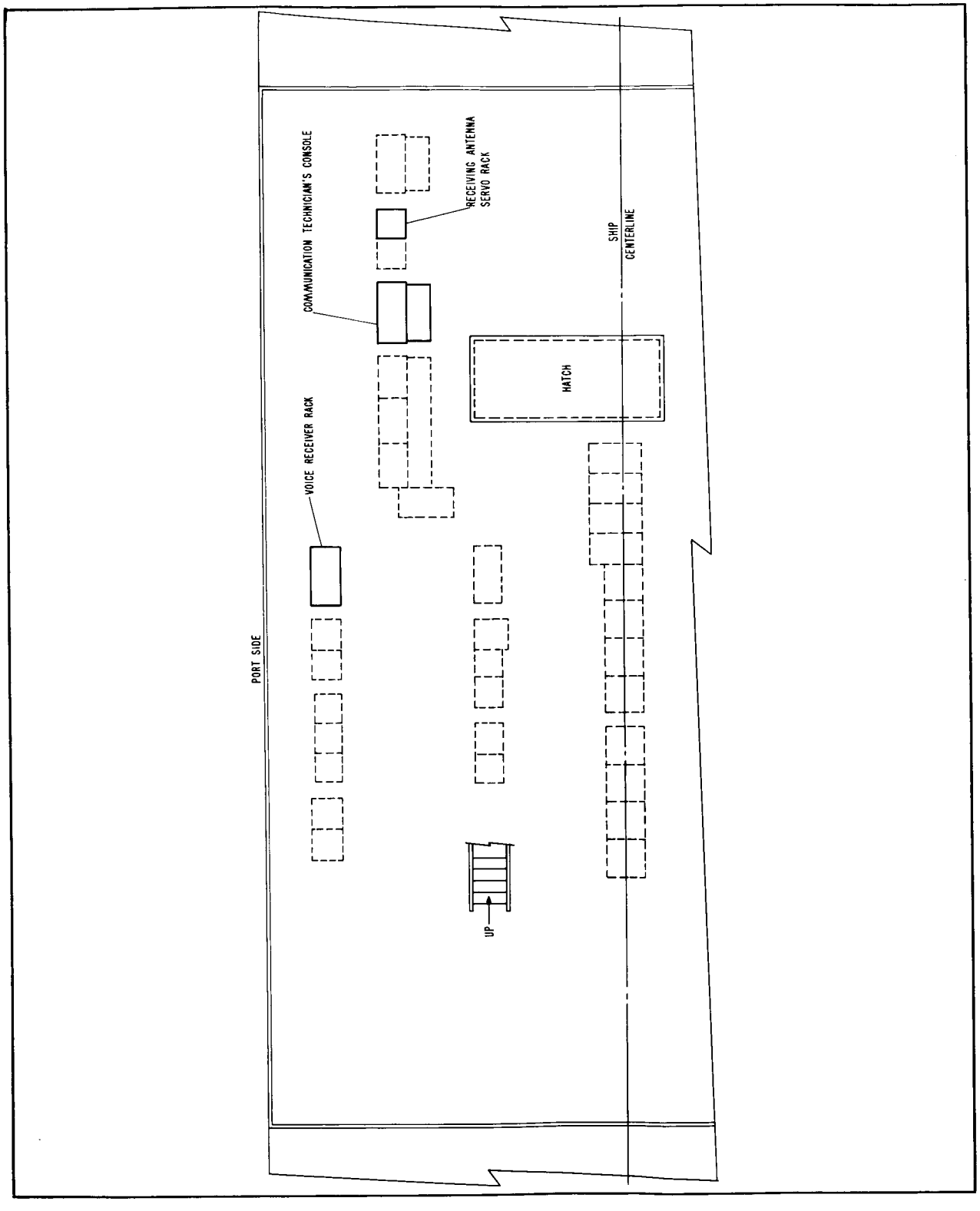

Figure 1-37. Atlantic and Indian Ocean Ships, Telemetry Room Equipment Placements

(b). The receiving antenna is a standard UHF right-hand quad-helix and HF dipole mounted on an AN/SCR-584 antenna pedestal. It is used to feed UHF voice receiver No. 1 and HF voice receiver No. 1. The voice transmitting and receiving antenna is identical to a standard receiving antenna No. 2, but coaxial relays mounted below the pedestal permit use of the antenna for transmitting as well as receiving on both HF and UHF.

(2). SPECIAL FEATURES

(a). Major areas in which the ship implementation differs from that of a standard site are as follows:

1. UHF sidetone and microphone audio line amplifiers are not required because of the proximity of the communication technician's console to the transmitters. The areas of the communication technician's console ordinarily occupied by the amplifiers are covered by blank panels.

2. Receiving antenna No. 2 is used for transmitting as well as receiving; it is designated voice transmitting and receiving antenna.

G. GRAND CANARY ISLAND

(1). SITE LAYOUT

(a). The Mercury site on Grand Canary (see figure 1-38) is located at the southern end of the island. The capsule communication equipment is housed in the telemetry and control building in the receiver area, and in the transmitter van at the transmitter area. The two areas are separated by approximately one-fifth of a mile.

(b). The double-rack communication technician's console and the servo racks for the two receiving antennas are housed in the acquisition room within the telemetry and control building (see figure 1-39). The voice receiver rack is in the telemetry room adjacent to the acquisition room.

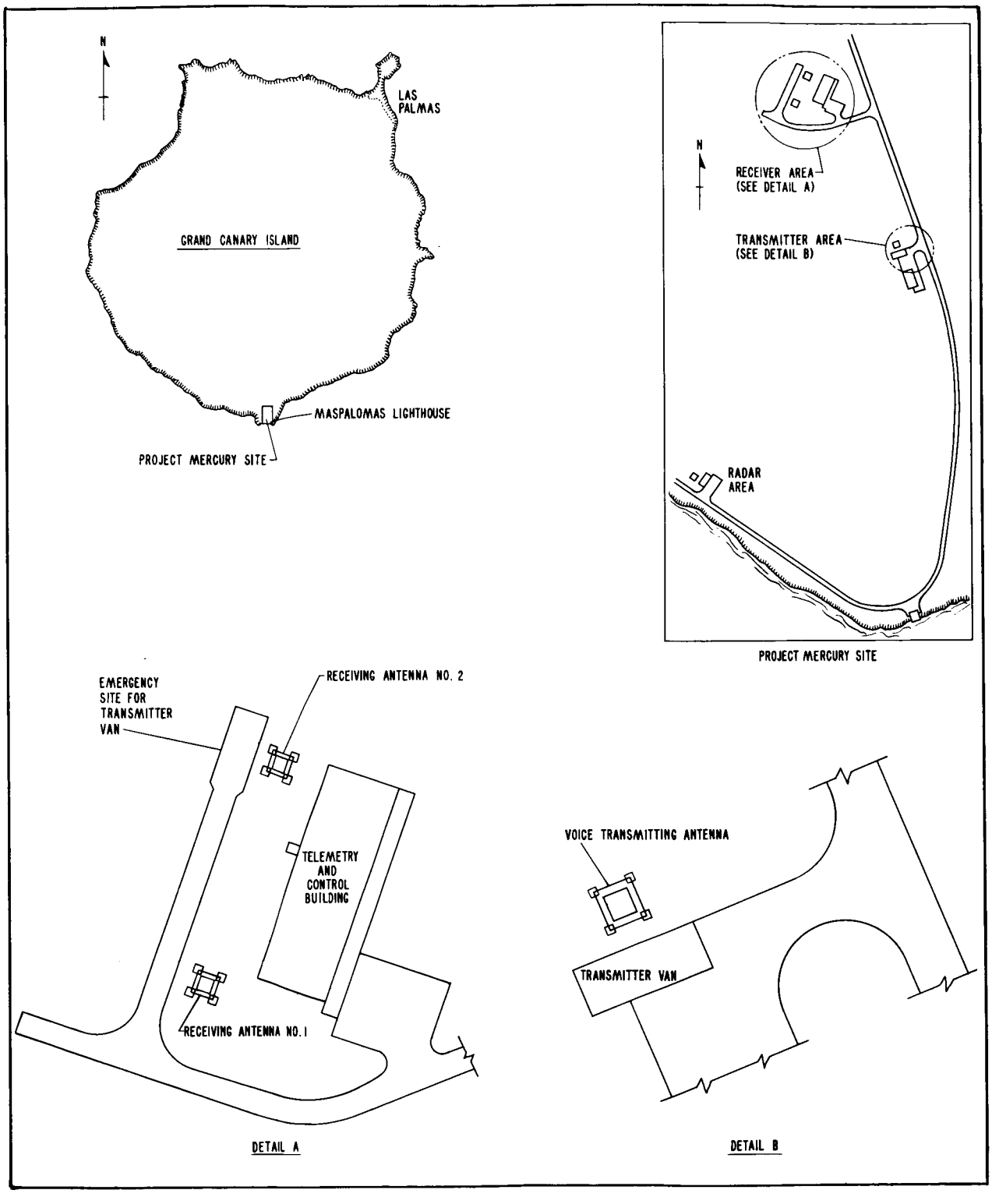

Figure 1-38. Grand Canary Island, Site Locations

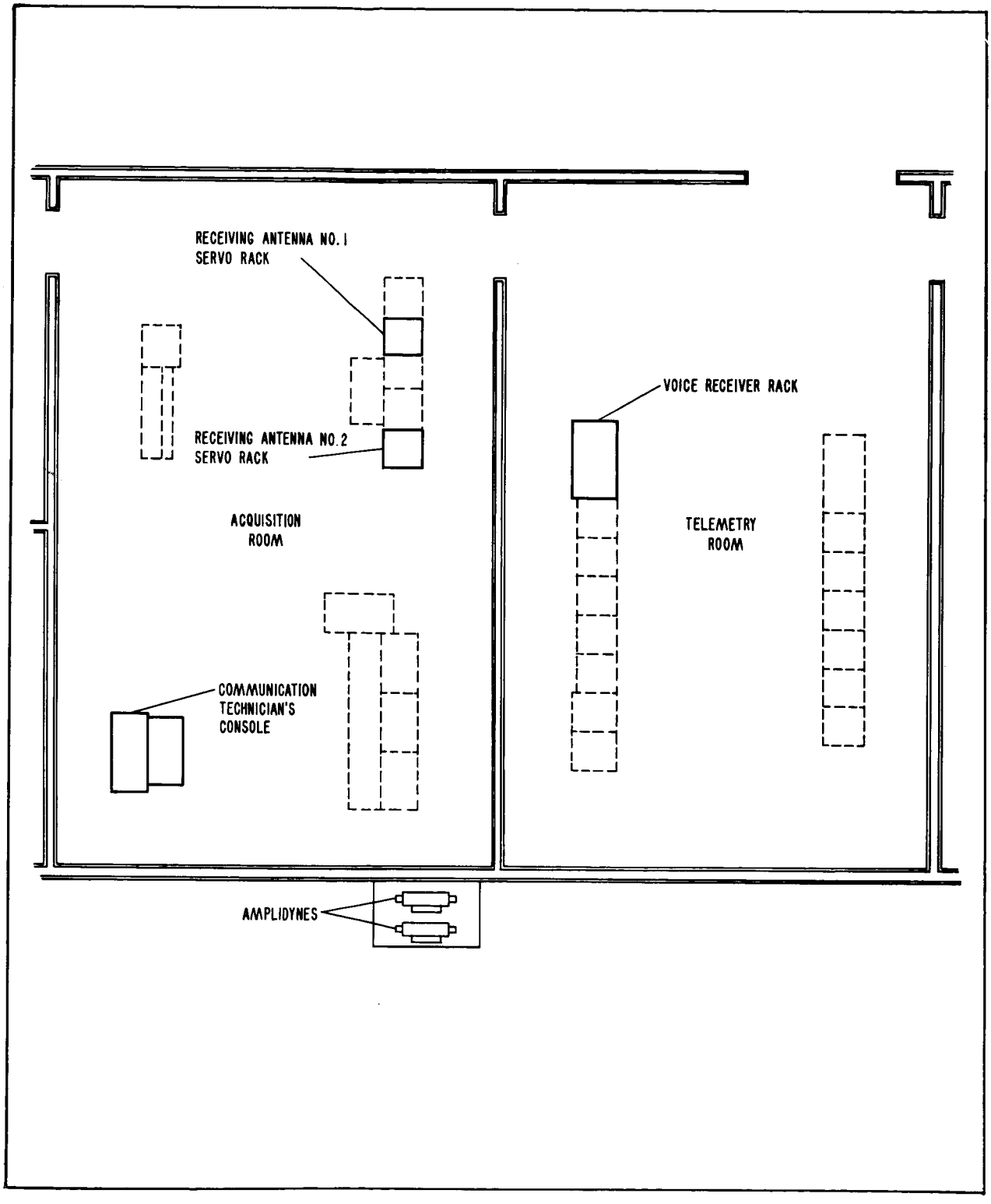

Figure 1-39. Typical Site Telemetry and Control Building, Equipment Placement

(2). SPECIAL FEATURES

(a). Major areas in which the Grand Canary Island site implementation differs from that of a typical site are as follows.

1. A tape recorder has been added alongside the receiving antenna No. 2 servo rack in the acquisition room

2. The transmitter van contains the recovery team communications equipment. See figure 1-20

3. The recovery team communications equipment consists of the communication transmitter, console, RF tuner, whip antenna and VSWR power meter.

H. KANO, NIGERIA

(1). SITE LAYOUT

(a). The Mercury site at Kano, Nigeria (see figure 1-40) is a typical capsule communication equipment layout, with some slight variations. The capsule communication equipment is housed in the telemetry and control building as shown in the typical site layout (figure 1-39) except that receiving antenna No. 1 servo rack is moved down adjacent to receiving antenna No. 2 servo rack.

(2). SPECIAL FEATURES

(a). The transmitter van at Kano is a typical van site with no equipment variations.

I. ZANZIBAR

(1). SITE LAYOUT

(a). The Mercury site at Zanzibar (figure 1-41) is a typical capsule communications site, with some very slight variations. The equipment placement in the acquisition room of the telemetry and control building is the same as in the acquisition room of the Kano, Nigeria site.

(2). SPECIAL FEATURES

(a). There are no deviations from the typical site transmitter van at this location. See figure 1-16 for a typical transmitter van layout.

J. MUCHEA, AUSTRALIA

(1). SITE LAYOUT

(a). The Mercury site at Muchea, Australia (figure 1-42) is on the western side of Australia. It is one of the six command sites of the capsule communications system. The transmitter van equipment arrangement and compliment are shown in figure 1-18. The variations from a typical site transmitter van are the addition of the master and the standby command transmitters and terminal equipment racks.

(2). SPECIAL FEATURES

(a). There are no special features in the equipment placement in the telemetry and control building.

K. WOOMERA, AUSTRALIA

(1). SITE LAYOUT

(a). The Mercury site at Woomera, Australia (figure 1-43) is in the south central section of the country. Woomera is another of the capsule communications standard sites containing a typical transmitter van and conventional telemetry and control building. In the acquisition room of the building a partitioning wall has been inserted to make two rooms: the acquisition room and the control room.

L. CANTON ISLAND

(1). SITE LAYOUT

(a). The Mercury site at Canton Island is a typical capsule communications installation. See figure 1-44 for the site location. The capsule communications equipment is concentrated on the

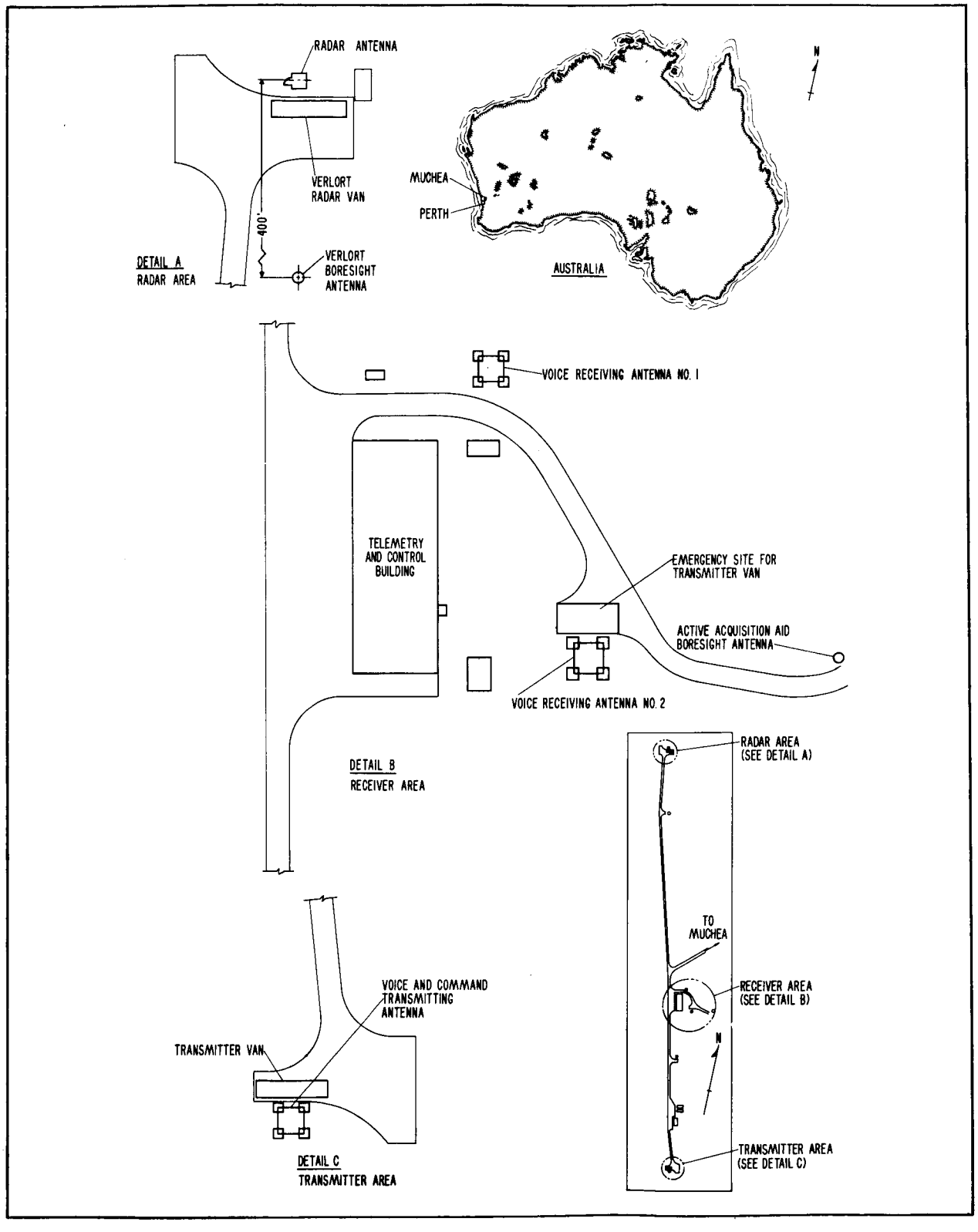

Figure 1-42. Muchea, Australia, Site Locations

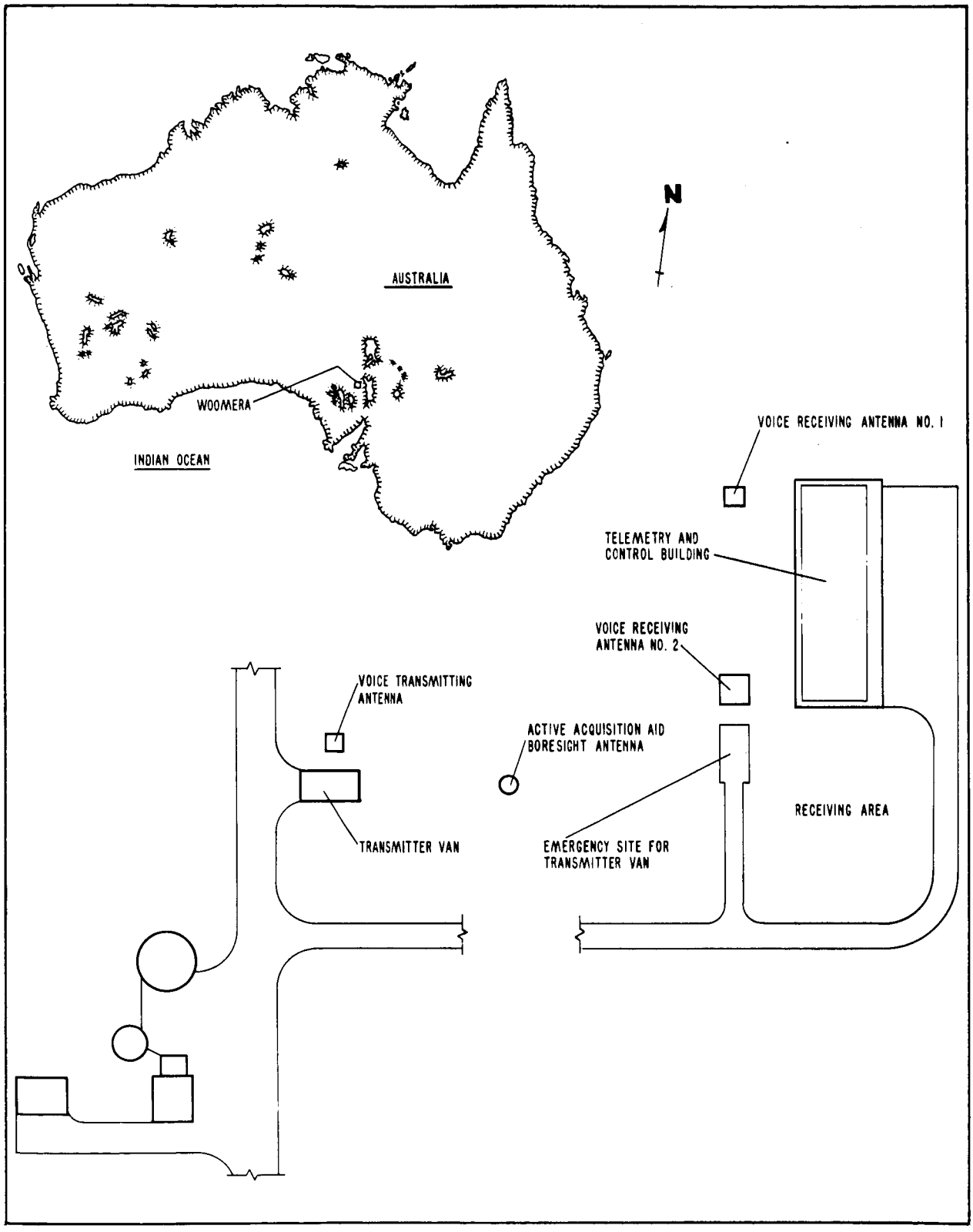

Figure 1-43. Woomera, Australia, Site Locations

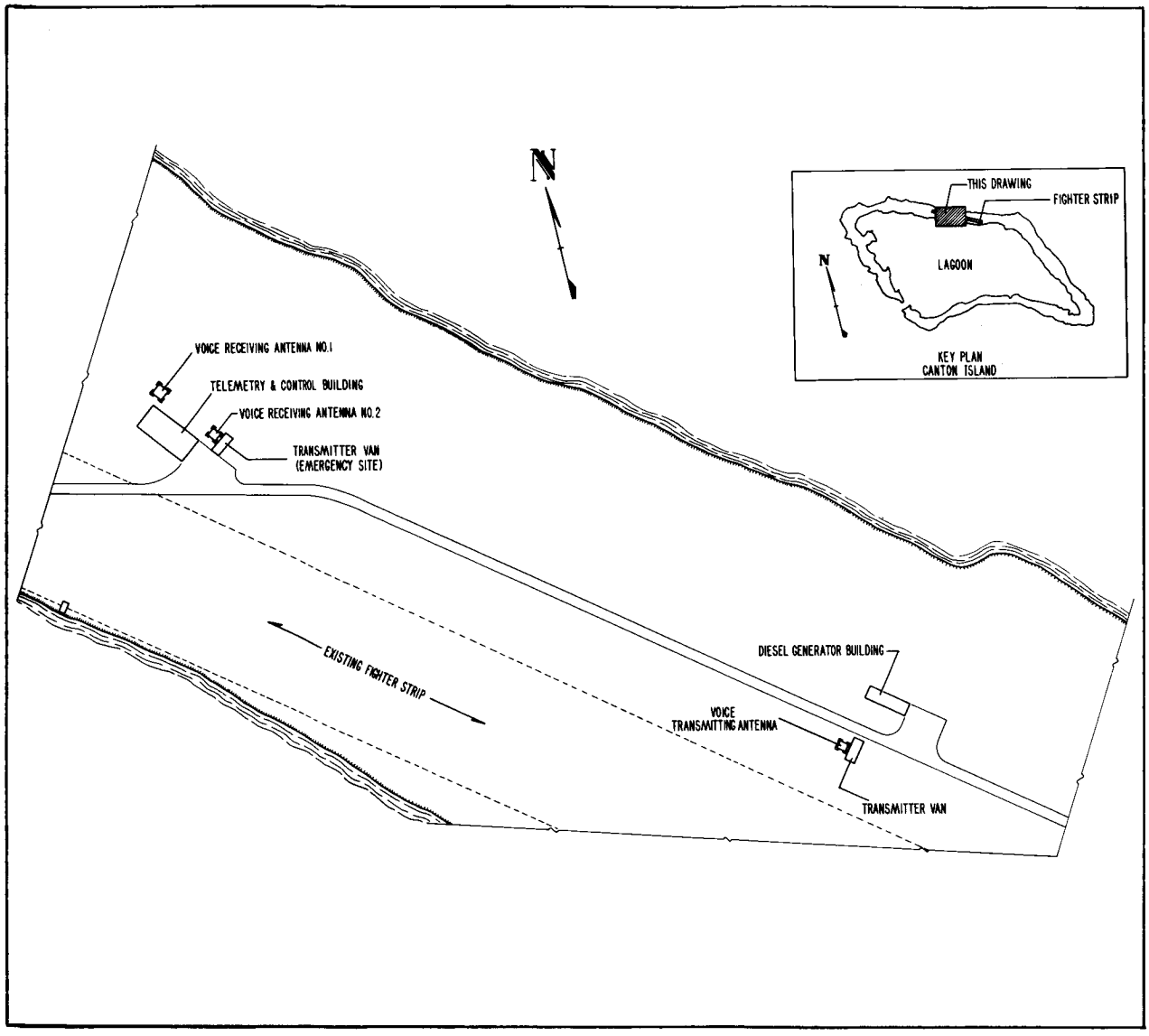

Figure 1-44. Canton Island, Site Locations

northern end of the island. The telemetry and control building has a typical site equipment placement layout. There are no special features except an emergency transmitter van site close to the telemetry and control building.

M. KAUAI ISLAND, HAWAII

(1). SITE LAYOUT

(a). The Mercury site at Kauai Island, Hawaii is located in the northwestern section of the island. The capsule communications equipment makes up one of the six capsule communications command sites. See figure 1-45 for the site location illustration. The receiver area of the site has a telemetry and control building with a typical floor plan for the equipment placement.

(b). The terminal equipment racks are located in the transmitter van. See figure 1-17.

N. GUAYMAS, MEXICO

(1). SITE LAYOUT

(a). The Mercury site at Guaymas is located on the California Gulf coast of Mexico. The capsule communications installation is another of the six command sites. The equipment placement in the telemetry and control building corresponds to a typical site equipment placement. For a plan of the sight, see figure 1-46.

O. POINT ARGUELLO, CALIFORNIA

(1). SITE LAYOUT

(a). The Mercury site at Point Arguello is on the Pacific Ocean between Los Angeles and San Francisco. It is another of the six capsule communications command sites. See figure 1-47 for the site location illustration, and see figure 1-48 for the equipment placement.

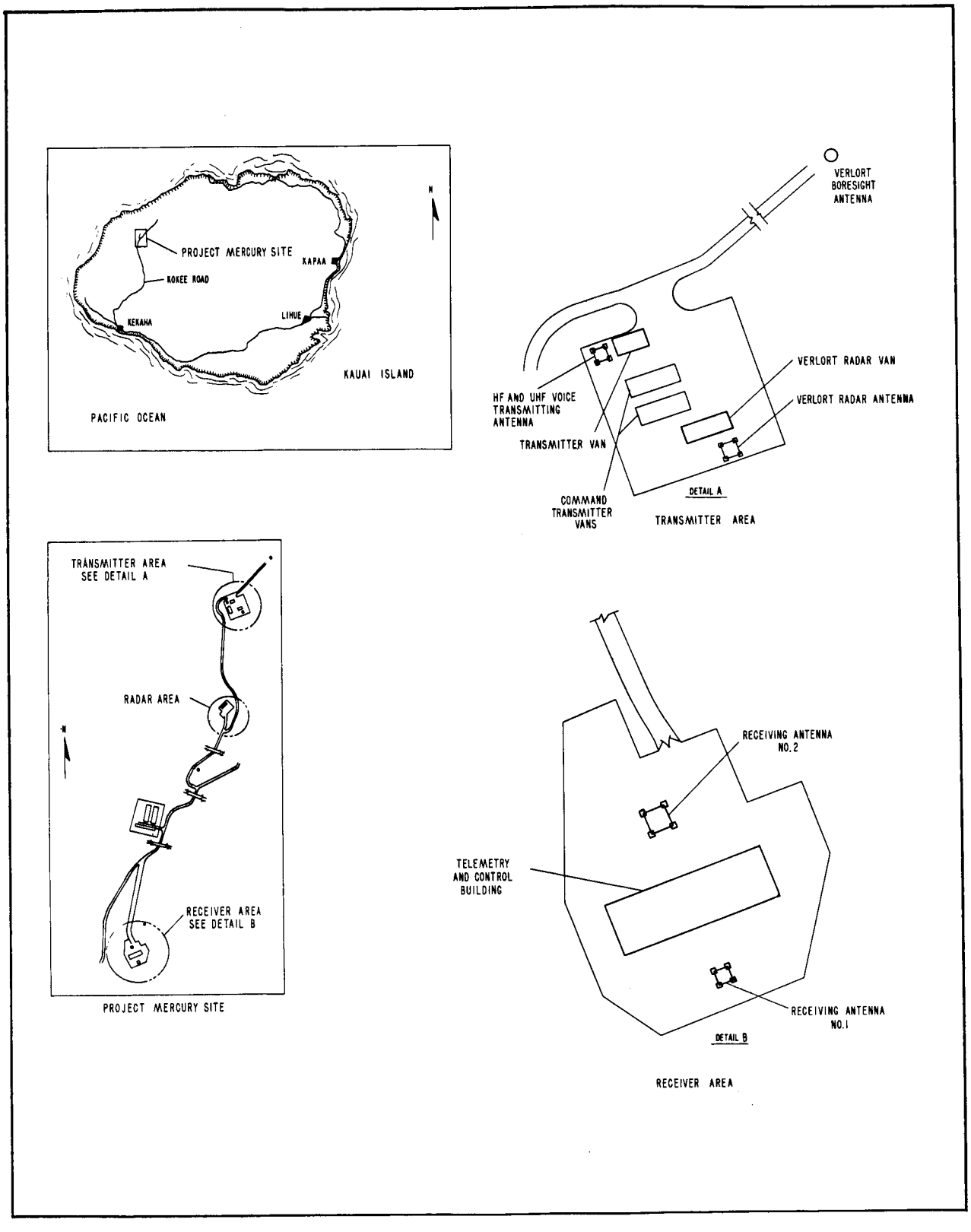

Figure 1-45. Kauai Island, Hawaii, Site Locations

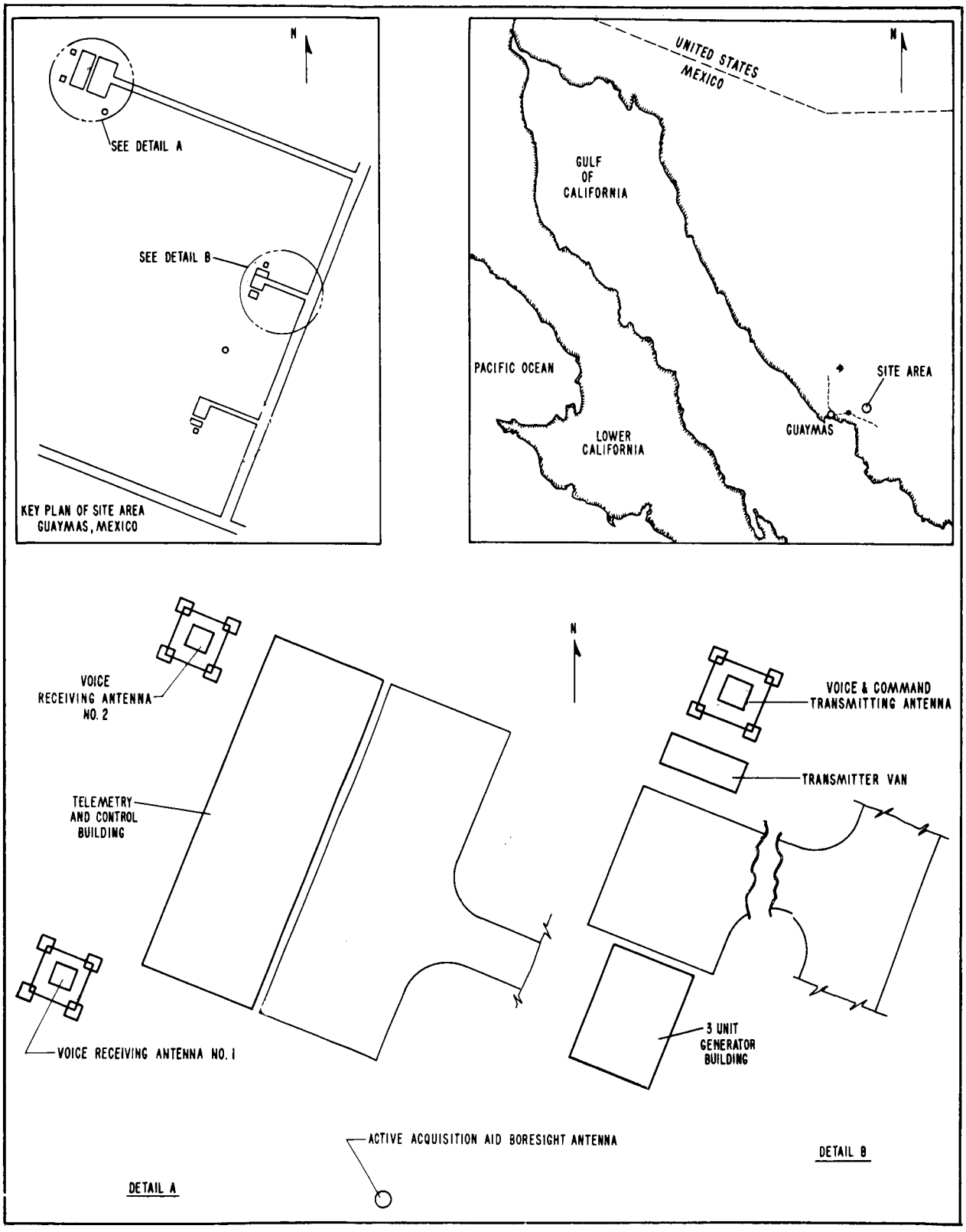

Figure 1-46. Guaymas, Mexico, Site Locations

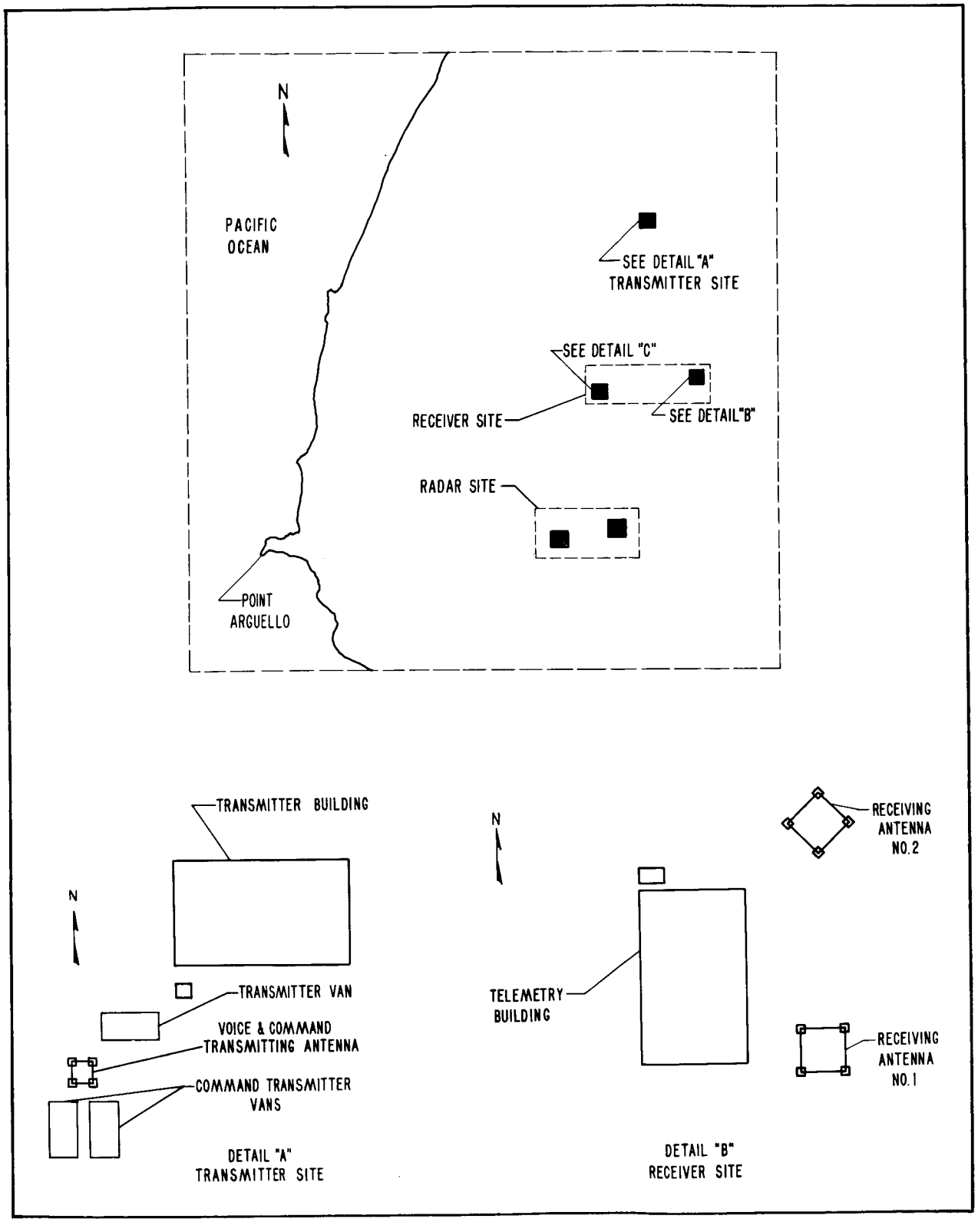

Figure 1-47. Pt. Arguello, California, Site Location

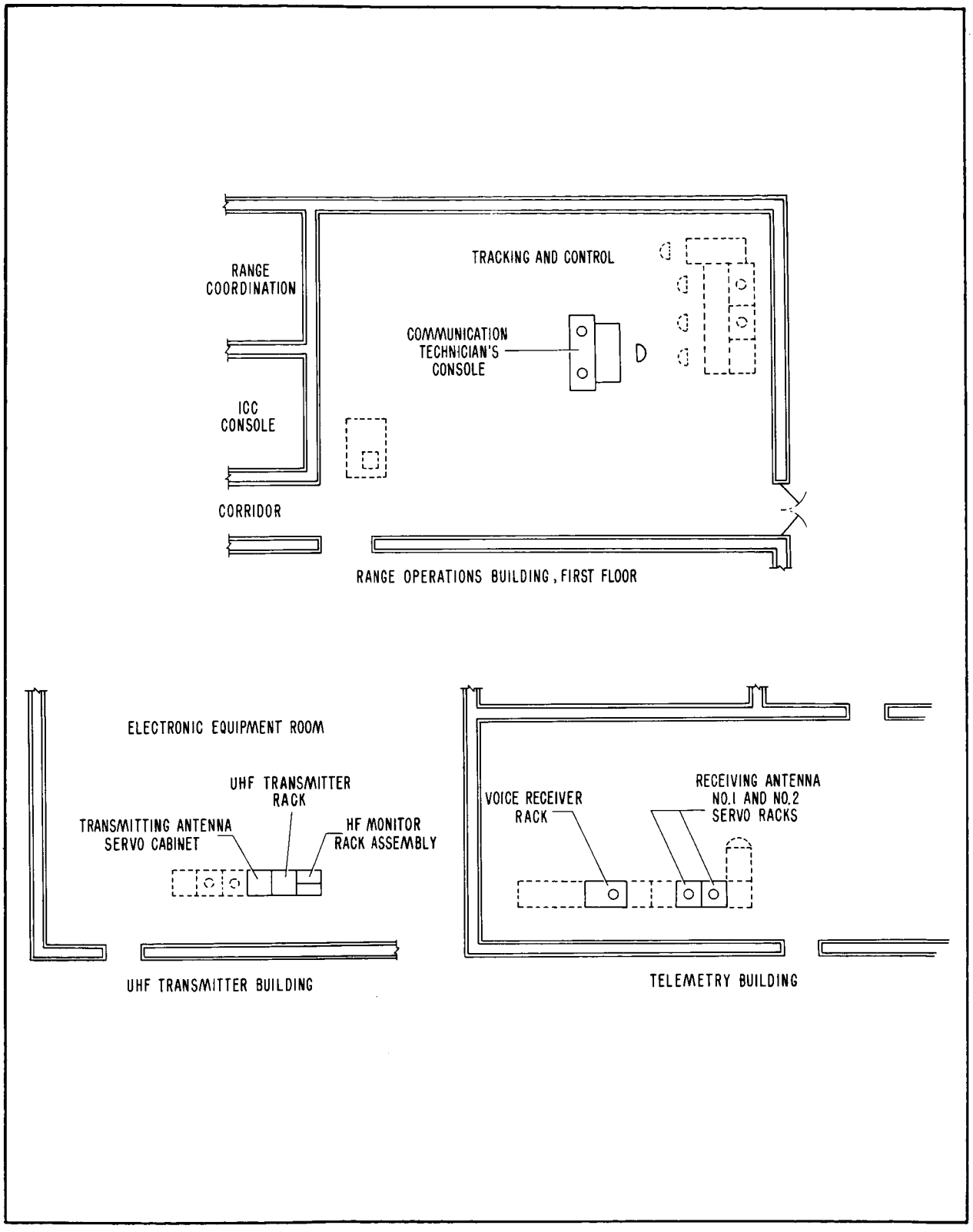

Figure 1-48. Point Arguello, California, Equipment Placement

P. CORPUS CHRISTI, TEXAS

(1). SITE LAYOUT

(a). The Mercury site at Corpus Christi is one of the six standard capsule communication sites. It is located south of the city of Corpus Christi at Rodd Field on Oso Bay. For a site location illustration, see figure 1-49. For a layout of the telemetry and control area, see figure 1-39.

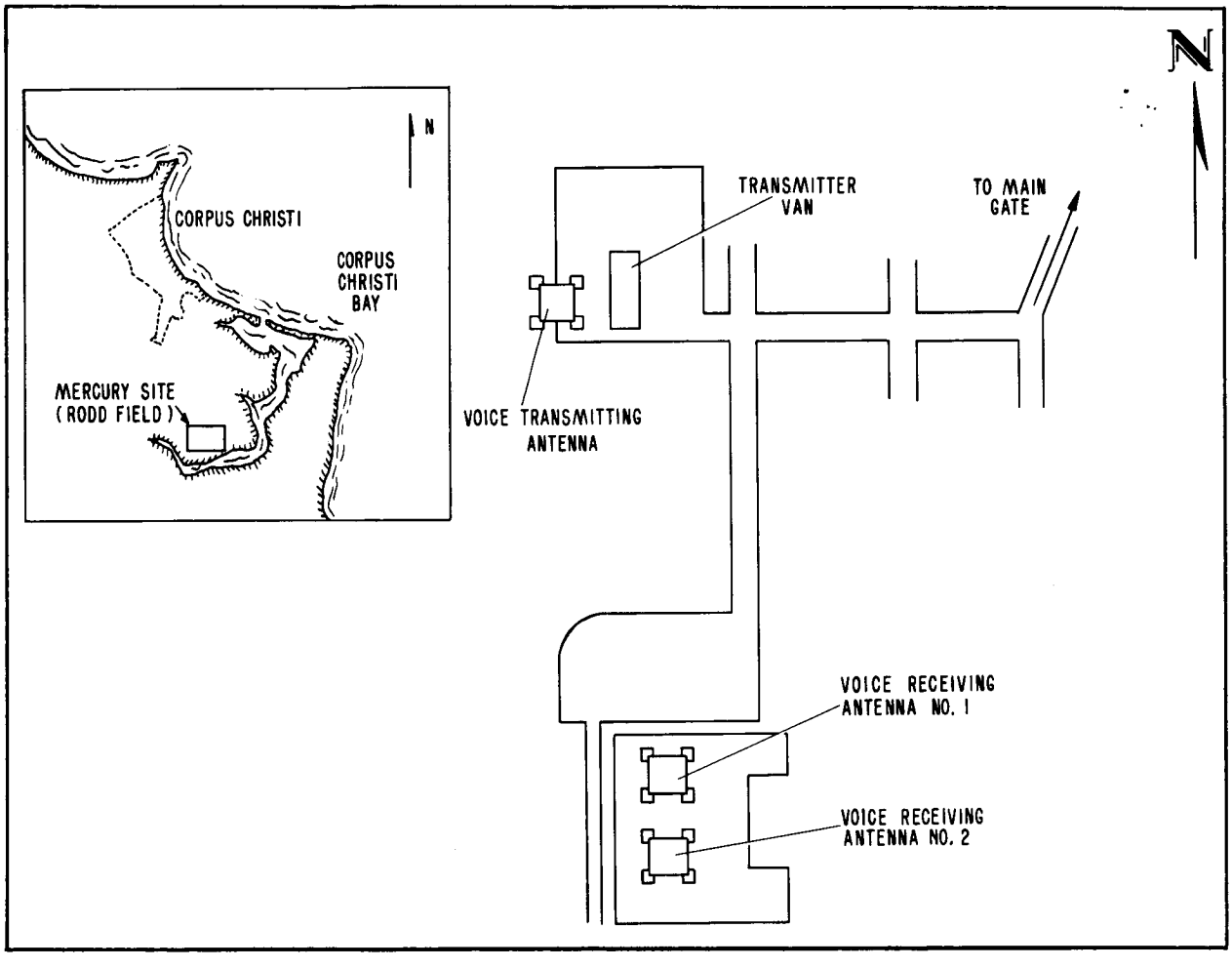

Figure 1-49. Corpus Christi, Texas, Site Location

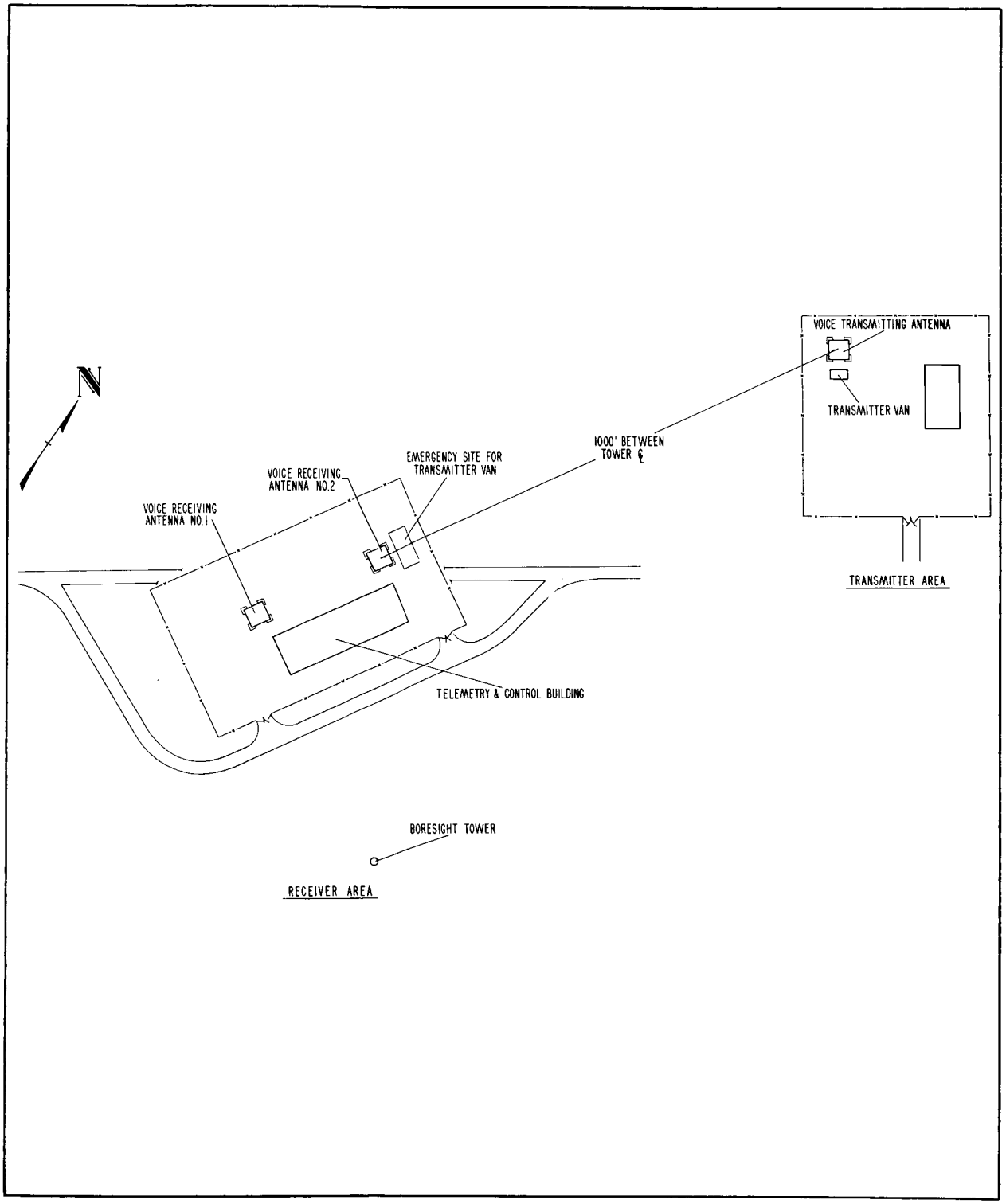

Figure 1-40. Kano, Nigeria, Site Locations

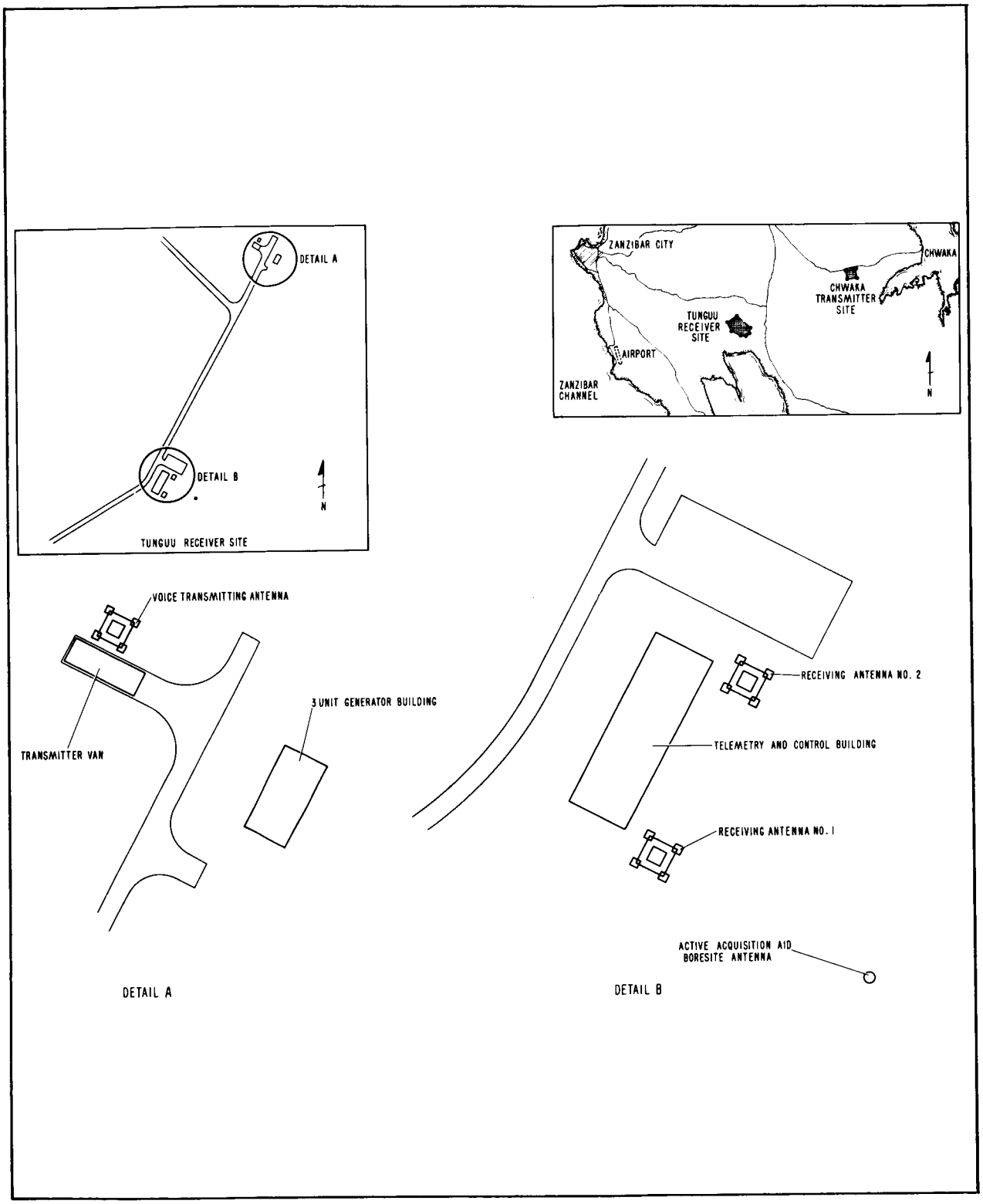

Figure 1-41. Zanzibar, Site Locations

SECTION II
INSTALLATION

2-1. GENERAL

This section contains the installation instructions for the capsule communication system. It covers equipment installation and inter-equipment cabling installation.

2-2. TRAILER VAN INSTALLATION AND TOWING

A. GENERAL

Lifting jacks are provided to raise the trailer van and to dismount the van body from the undercarriage. The jacks are stored in a compartment at the lower front end of the trailer. A retainer bar fastened by two, 5/8-inch hex head bolts must be removed when the jacks are to be removed from the compartments. Refer to figure 2-1 for the lifting jack placement and to figure 2-2 for the trailer van towing details.

B. TYPICAL TRAILER VAN SITING

(1). Perform the typical trailer van siting as follows:

(a). After maneuvering the trailer van into position with the prime mover, shut off the engine and lock the brakes.

(b). On the trailer van, pull handbrake into "on" position.

(c). Disconnect the safety chain and breakaway switch chain from the prime mover.

(d). Disconnect the electrical cable from the receptacle on the front side of the trailer van.

(e). Remove the four jacks from their compartment and hang them on the eyes at each corner of the trailer. Slip the lifting tongue between the two, 1/2-inch by 1/2-inch square bars which are provided to prevent jacks from rotating while jack is being cranked up.

(f). Crank up jacks in sequence until the van floor is level and the tires are barely touching the surface of the hardstand.

(g). Connect a guy wire to each of the four eyelets at the van corners. Place blocks under van and remove jacks.

(h). Uncouple the drawbar from the prime mover.

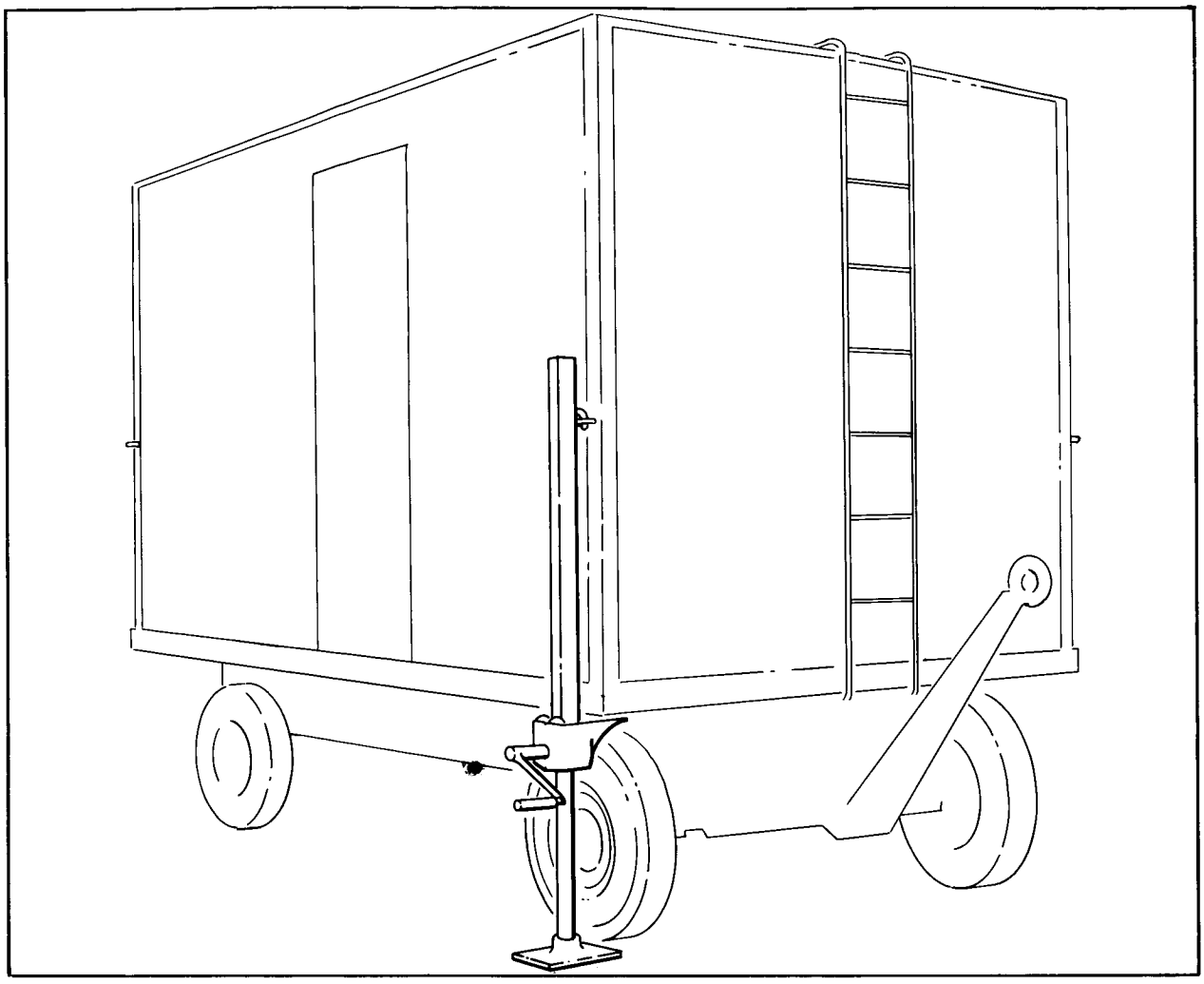

Figure 2-1. Trailer Van, Lifting Jack Placement

(i). A portable stairway is provided for entrance to the van. The stairway is mounted to the side of the trailer by two, 5/8-inch diameter studs and secured with cotter pins.

C. DISMOUNTING VAN FROM TRAILER UNDERCARRIAGE

(1) The van can be removed from the trailer by performing the following procedure:

(a). Remove the jacks from their compartment and hang them on the eyes at each corner of the trailer. Slip the lifting tongue between the two, 1/2-inch by 1/2-inch square bars which are provided to prevent jacks from rotating while jack is being cranked up.

(b). Crank up jacks in sequence until weight of the van is lifted from the undercarriage.

(c). Remove the eight, 5/8-inch hex head bolts that hold the van to the trailer undercarriage.

(d). Raise van until trailer undercarriage is clear.

(e). Disconnect the clearance light cable, breakaway switch chain, and safety chain; pull the trailer undercarriage out.

(f). When the trailer undercarriage is clear, lower the jacks in sequence until the van reaches the ground. Jacks can then be removed and stored if desired or left intact for leveling purposes.

(g). Reverse of the above procedure will restore the van and trailer to mobility.

D. TOWING TRAILER VAN

(1). To couple the trailer van to a prime mover, perform the following procedure:

(a). Pull handbrake into "on" position.

(b). Connect drawbar to coupling of prime mover.

WARNING

Be sure that the locking catch on the coupling of the prime mover is fully engaged.

(c). Attach safety chain and breakaway switch chain to prime mover.

(d). Plug the electrical cable from the prime mover into the receptacle on the front side of the trailer van.

(e). Check that the drawbar hinge is fully seated and that the cotter pin is securely in place.

(f). If the lifting jacks are in use, lower each jack in turn, until the weight of the trailer van is fully upon its wheels. Remove the lifting jacks and stow in the compartment provided under the front of the van.

(g). Release the handbrake.

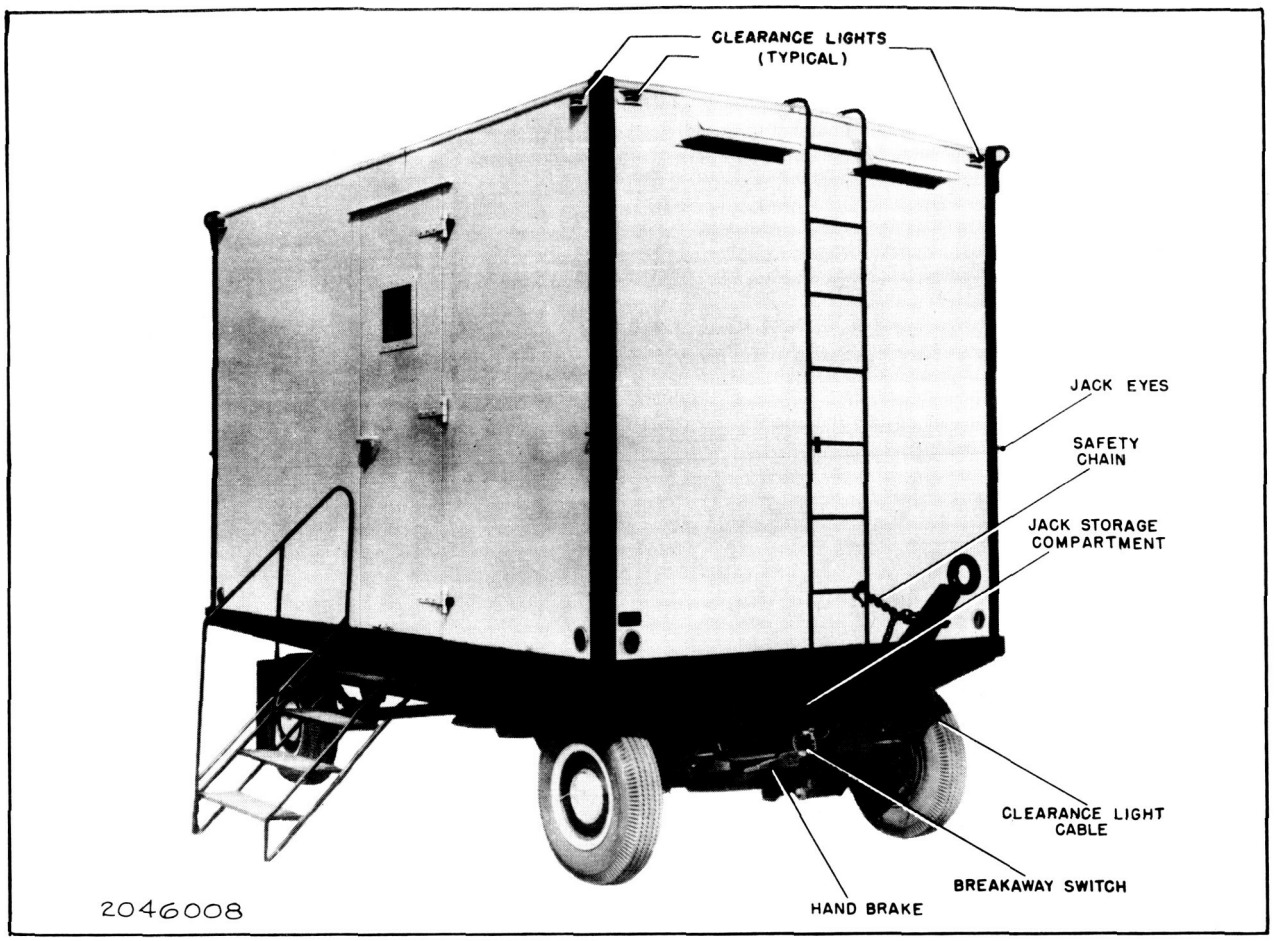

Figure 2-2. Trailer Van, Towing Details

(h). From the cab of the prime mover, check that clearance lights, tail lights, and stop lights function properly. The trailer van is now ready for towing.

WARNING

With a load capacity on each tire of 3360 pounds, do not exceed 20 miles per hour. With a load capacity on each tire of 2780 pounds, do not exceed 40 miles per hour.

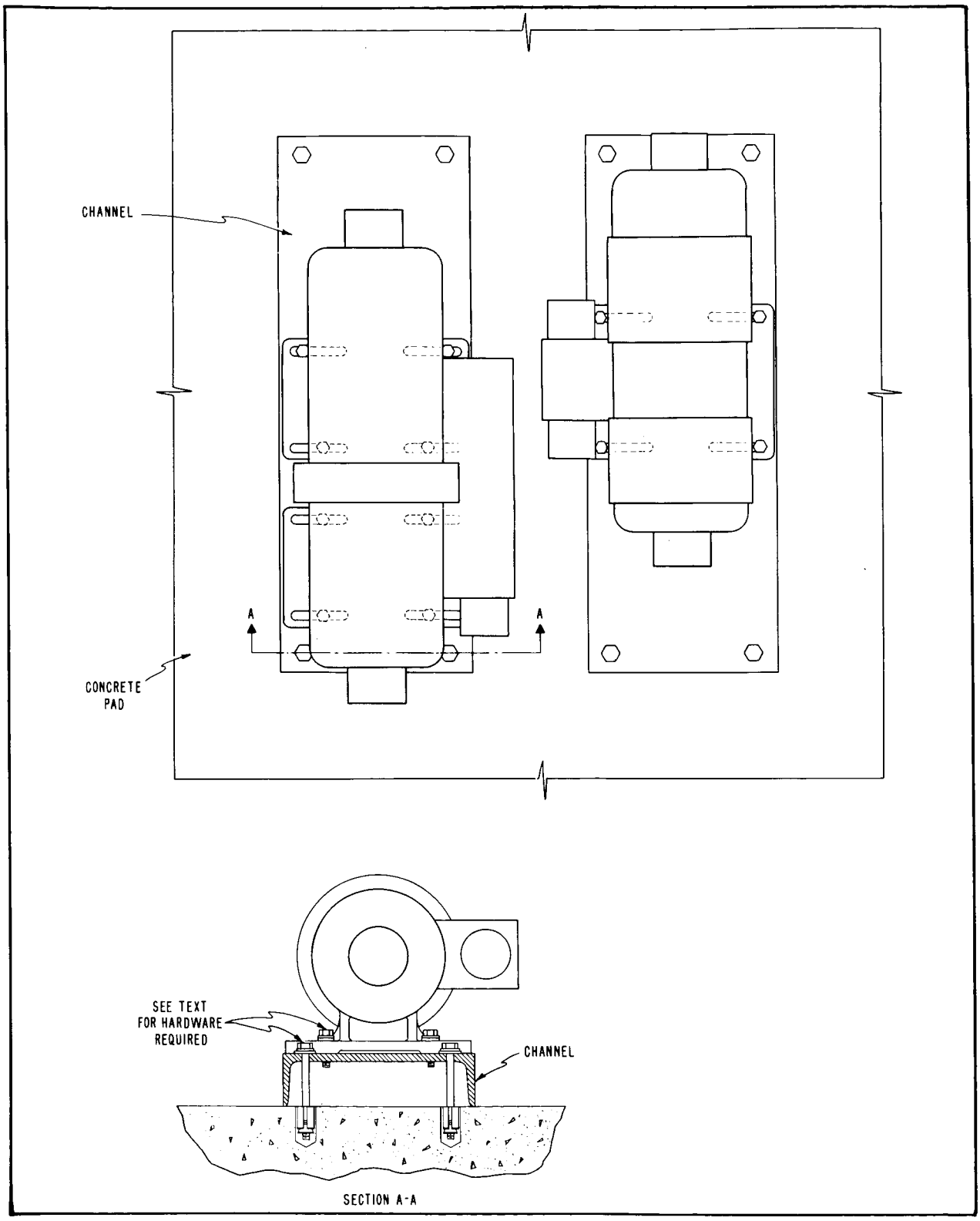

Figure 2-4. Amplidyne Mounting Details

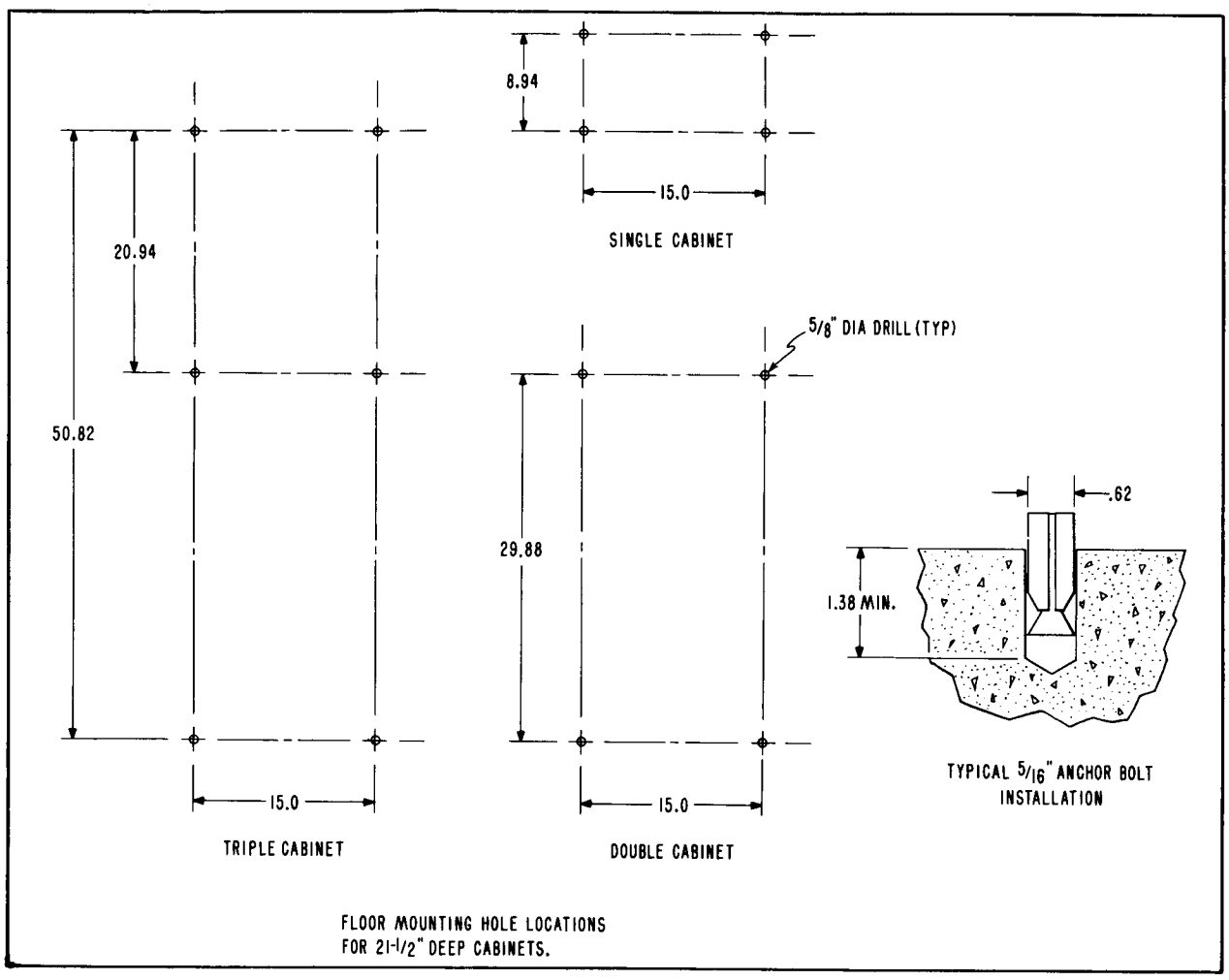

Figure 2-3. Cabinet Mounting Details

2-3. EQUIPMENT INSTALLATION

A. FLOOR MOUNTED EQUIPMENT

(1). The capsule communication system floor mounted equipment consists of the communication technician's console, the voice receiver rack, the UHF voice transmitter rack, and the HF voice transmitter. These units are shipped with all panel mounted components in place. Therefore, it is only necessary to unpack the equipment in accordance with normal unpacking procedures, locate the units in accordance with the site layout diagrams in section I, and install the inter-equipment cabling as described in paragraph 2-4.

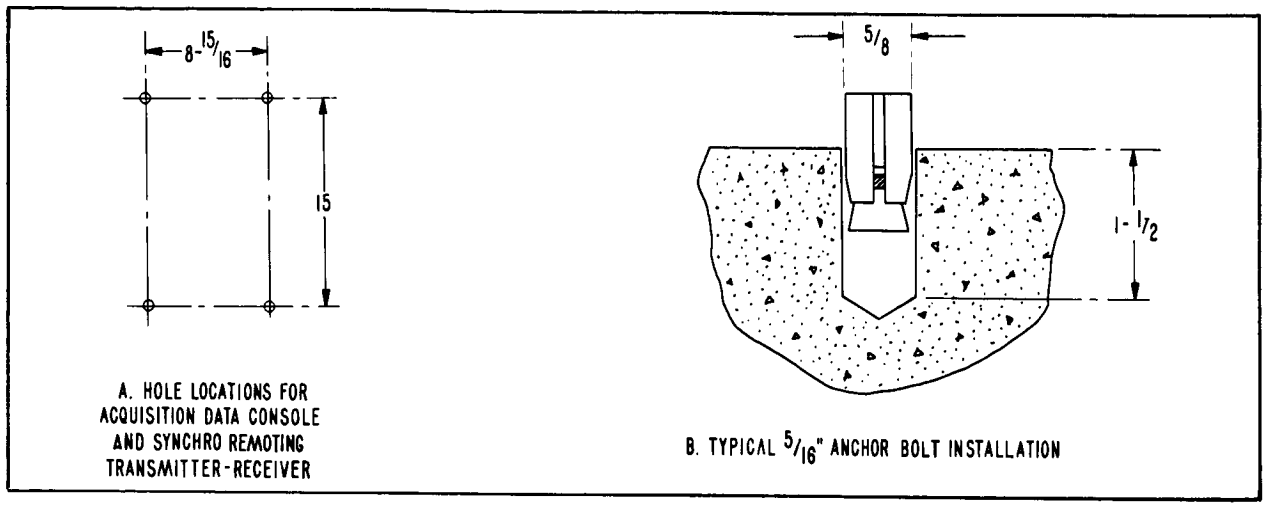

Figure 2-5. Synchro Remoting System Transmitter-Receiver Mounting Hole Locations

(2). The cabinets and racks containing the various units of the capsule communication system have standardized mountings. Figure 2-3 shows outline drawings of the three rack mountings used. Figure 2-4 is an outline drawing of the amplidyne mounting.

(3) The consoles and cabinets are mounted to the floors of the buildings by anchor bolts. Mounting hole locations and details of the anchor bolt installations are shown in figures 2-3 and 2-4. Figure 2-5 shows the outline dimensions.

(4) Table 2-I gives equipment mounting hardware for the Synchro Remoting Transmitting Receiving System cabinet. This is a typical set of anchor bolt hardware required for mounting the cabinet.

TABLE 2-I. EQUIPMENT MOUNTING HARDWARE

Equipment	Hardware Name and Description	Part Number	Quantity
Synchro Remoting Transmitter-Receiver	Anchor bolt, 5/16" lead insert	A683322-1	4
	Bolt 5/16" - 18 NC, 1" long	HK936516-2018	4
	Flat washer 5/16"	HK779S20-A	4
	Lock washer 5/16"	HK779G20-E	4

2-4. INTER-EQUIPMENT CABLING

A. GENERAL

(1). The inter-equipment cabling diagrams for the capsule communication system is shown in figures 2-6 through 2-14. These diagrams show all interconnecting cabling for the capsule communication system and also the cabling necessary for connecting the capsule communication system to other equipment of the mercury ground instrumentation. The symbol number designation, the function, and the terminal board or jack to which the cable connects is shown.

(2). At Guaymas, Mexico two hardstands are available for the transmitter van installation. However, only one set of technical power and utility power cables are furnished. These cables must be moved with the transmitter van in the event the van is moved from the prime to the secondary hardstand.

B. CABLE WIRING

Detailed wiring information for the capsule communication system cables is provided in separate books. These books, titled "Installation Wiring Information", are listed in table 2-2 with the associated Bendix part number for the various sites. These books contain all information necessary for the installation team to fabricate and install all interface cabling.

TABLE 2-II. INSTALLATION WIRING INFORMATION BOOKS

Site	Part No. of Book	No. of Volumes
Cape Canaveral	L683173-3	2
Grand Bahama Island	L683173-4	1
Grand Turk Island	L683173-5	1
Bermuda	L683173-6	3
Atlantic Ship	L683173-7	1
Grand Canary Island	L683173-8	1
Kano, Nigeria	L683173-9	1
Zanzibar	L683173-10	1
Indian Ocean Ship	L683173-11	1
Muchea, Australia	L683173-12	1
Woomera, Australia	L683173-13	1

TABLE 2-II. INSTALLATION WIRING INFORMATION BOOKS (Cont.)

Site	Part No. of Book	No. of Volumes
Canton Island	L683173-14	1
Kauai Island, Hawaii	L683173-15	1
Point Arguello, California	L683173-16	1
Guaymas, Mexico	L683173-17	1
Corpus Christi, Texas	L683173-19	1

C. NOISE AND CROSSTALK ON AUDIO TRANSMISSION LINES

(1). The audio transmission lines within the Bendix Radio equipment utilize twisted, shielded pair, line. The interconnecting audio lines between major equipments, particularly remoted equipments, are either other WECO team member responsibilities or are made available by the cognizant site manager in the case of sites already operating on other programs. In most cases, these audio lines are multipair and are not twisted, shielded pair, line. The audio lines operate at low power levels (usually 0 dbm or less). They are thus susceptible to noise interference from other electrical circuits, particularly power lines or synchro reference voltage lines paralleling the audio lines. Also, an unbalanced condition between pairs of audio lines can result in crosstalk resulting from electrostatic coupling between the lines. Therefore, noise and crosstalk preventive measures must be fully exercised.

(2). The following list of preventive measures is provided as suggestions for helping to reduce noise and crosstalk on audio transmission lines:

(a). When running audio transmission lines with power lines, separate audio lines from power lines by using shielded lines. Also, separate shielded cables and reroute power lines down other paths when connecting to equipment racks.

(b). Maintain balanced conditions on all pairs within a cable which have audio signals present on them. Insure that source and load impedances are properly matched.

(c). Avoid using line which has frayed or otherwise damaged insulation. Conductive coupling occurs where there is leakage between two pairs of conductors.

(d). Insure good splices and good connections to avoid resistive unbalance of audio lines. Wires of an audio pair must be of the same gauge.

(e). Maintain audio levels at the prescribed levels (0 db ±3 db at the sending end). Normal balanced line attenuation should be less than 1.5 db per mile for a 1000 cps signal. A 1 db increase in attenuation indicates wet wire or poor splices and connections.

(f). To help reduce crosstalk, separate the receiving end of one pair of audio line from the sending ends of other pairs of audio line.

D. SWR AND POWER METER (ELECTRICAL INSTALLATION)

(1). The RF connectors on the panel of the SWR and power meter are type UG-58A/U. One is labeled "INPUT" and the other "OUTPUT." The proper mating connector for both of these is UG-210/U.

(2). The input cable should be made from RF cable of sufficient length to reach from the output of the recovery team transmitter to the "INPUT" of the SWR and power meter. It should have a UG-21 connector on one end and an appropriate termination to match the transmitter on the other end.

(3). The output cable should be made from RF cable of sufficient length to reach from the "OUTPUT" of the SWR and power meter to the input of the antenna tuner. It should have a UG-21 connector on the end which goes to the "OUTPUT" of the SWR and power meter and an appropriate termination on the other end.

(4). A grounding strap should be made from flexible braid or heavy cable. It should be connected to the stud on the bottom of the SWR and power meter cabinet on one end and the other end connected to the common ground of the transmitter.

CAUTION

Before applying RF power to the SWR and power meter be sure there is a complete circuit. Check to see that there is a good connection from the transmitter output

to the SWR and power meter "INPUT." Check to see that there is a good connection from the SWR and power meter "OUTPUT" to the input of the antenna tuner. Also check to see that there is a good connection from the output of the antenna tuner to the transmitting antenna. Check the connections on both ends of the ground cables. Any open circuit may cause damage to the equipment and personal injury.

2-5. PRE-OPERATIONAL CHECKS

No pre-operational checks are required for the overall capsule communication system. Operational checks are described in Section III.

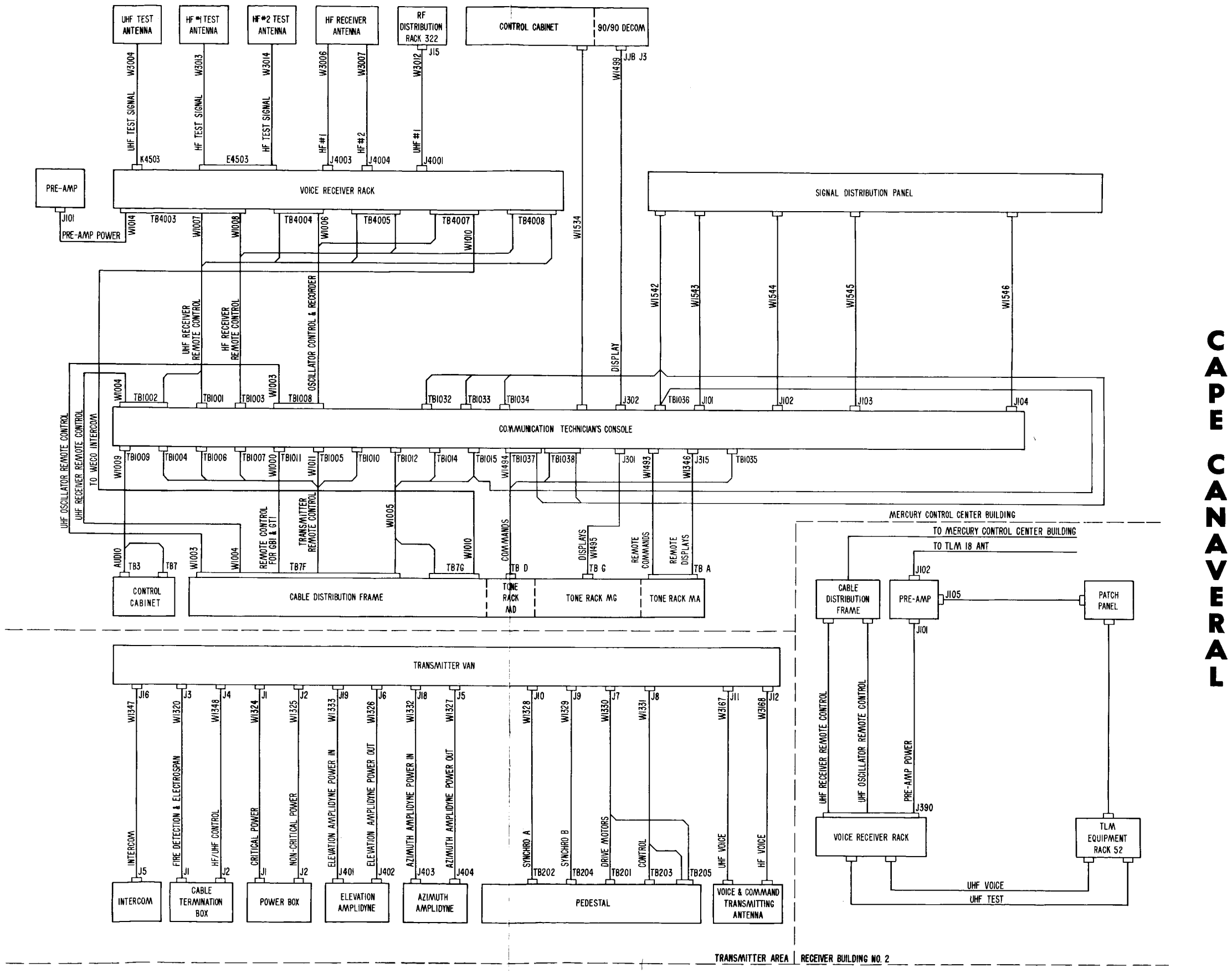

Figure 2-6. Inter-Equipment Cabling Diagram, Cape Canaveral

CAPE CANAVERAL

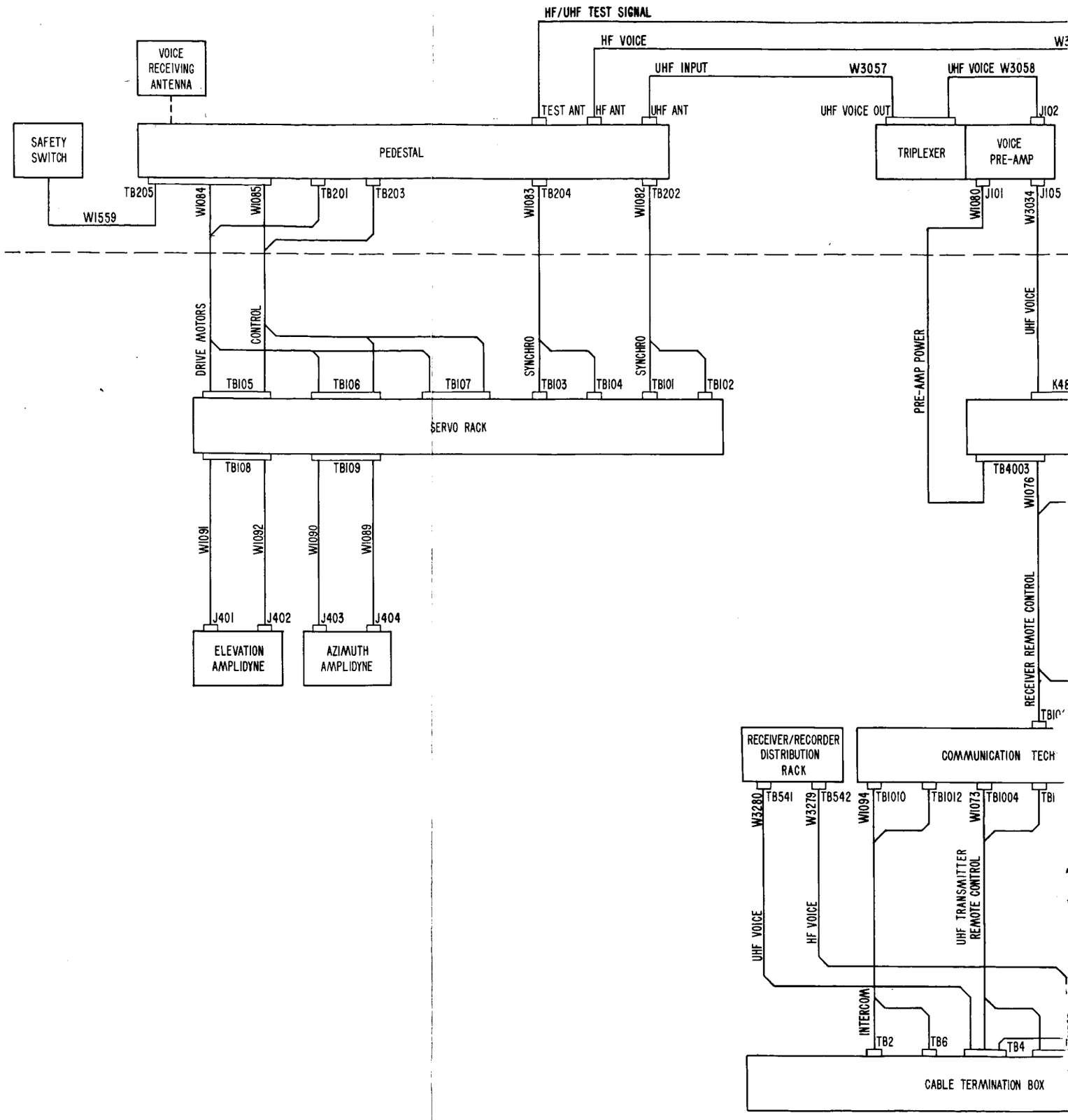
HF/UHF TEST SIGNAL
HF VOICE
UHF INPUT
W3057
UHF VOICE W3058
VOICE RECEIVING ANTENNA
SAFETY SWITCH
PEDESTAL
TEST ANT
HF ANT
UHF ANT
UHF VOICE OUT
J102
TRIPLEXER
VOICE PRE-AMP
TB205
W1559
W1084
W1085
TB201
TB203
W1083
TB204
W1082
TB202
W1080
J101
W3034
J105
DRIVE MOTORS
CONTROL
SYNCHRO
SYNCHRO
UHF VOICE
PRE-AMP POWER
TB105
TB106
TB107
TB103
TB104
TB101
TB102
SERVO RACK
TB108
TB109
TB4003
W1076
W1091
W1092
W1090
W1089
J401
J402
J403
J404
ELEVATION AMPLIDYNE
AZIMUTH AMPLIDYNE
RECEIVER REMOTE CONTROL
RECEIVER/RECORDER DISTRIBUTION RACK
COMMUNICATION TECH
W3280
TB541
W3279
TB542
W1094
TB1010
TB1012
W1073
TB1004
UHF VOICE
HF VOICE
UHF TRANSMITTER REMOTE CONTROL
INTERCOM
TB2
TB6
TB4
CABLE TERMINATION BOX

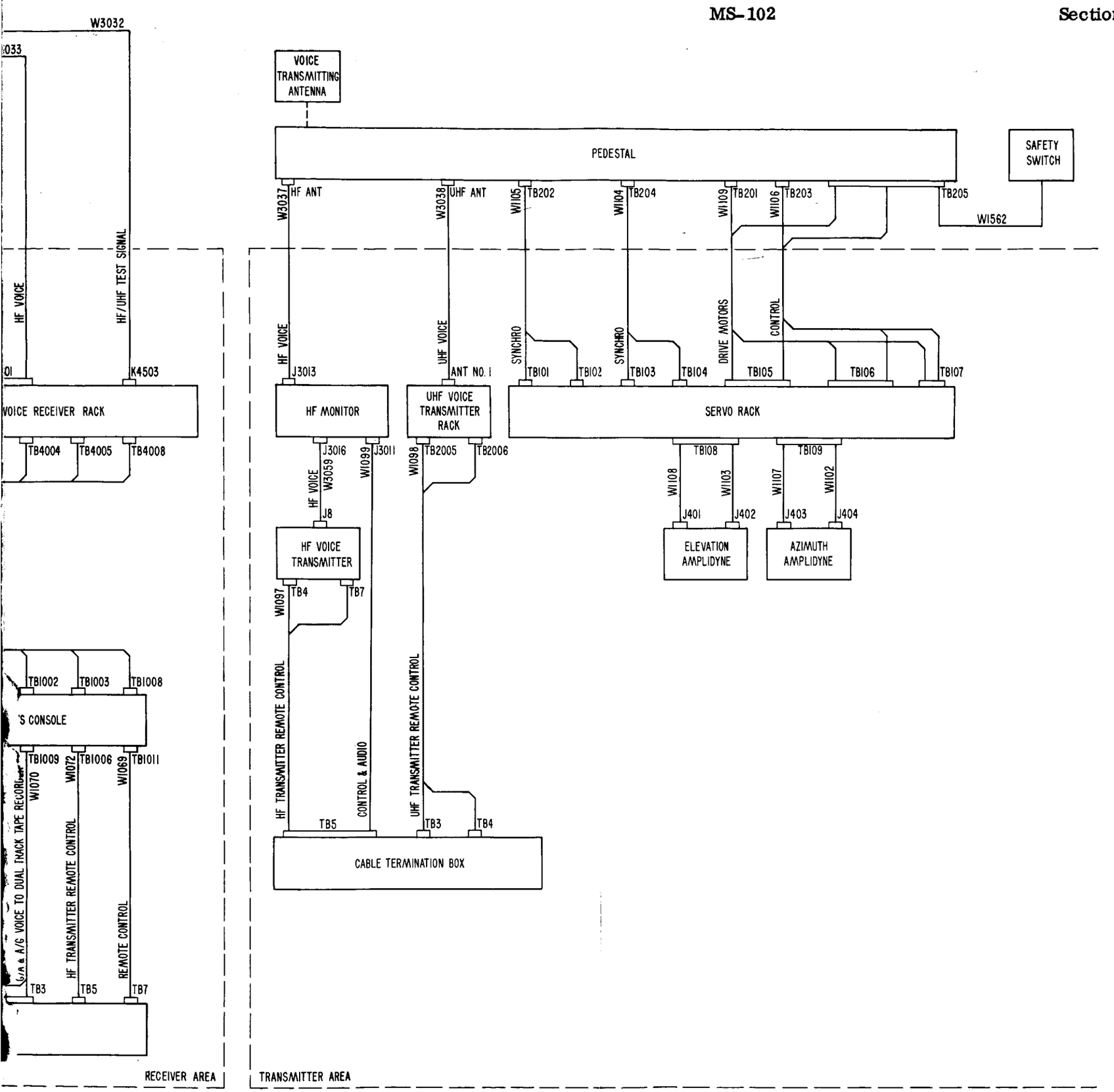

GRAND BAHAMA I.

Figure 2-7. Inter-Equipment Cabling Diagram, Grand Bahama Island

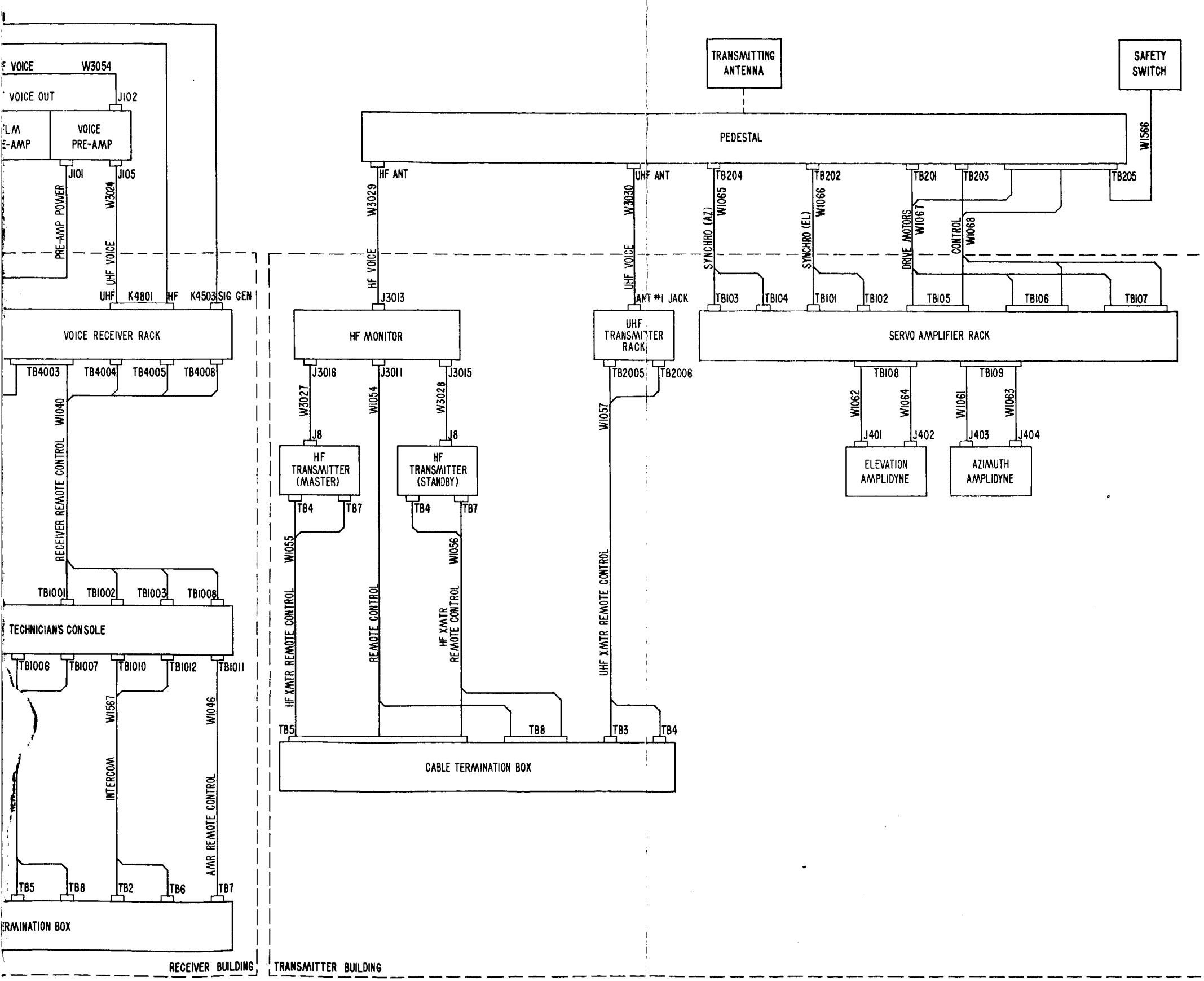

GRAND TURK I.

Figure 2-8. Inter-Equipment Cabling Diagram, Grand Turk Island

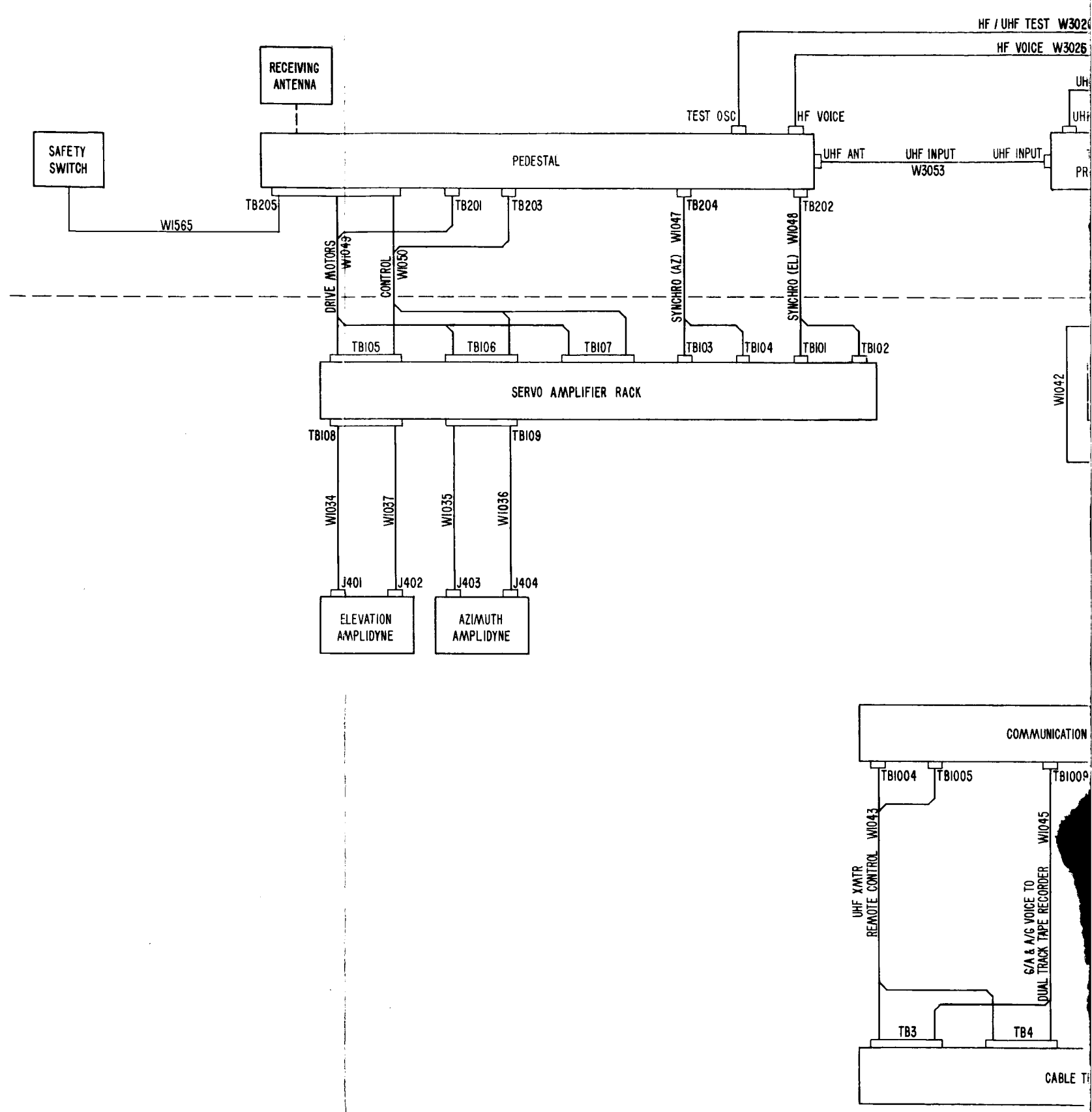
HF / UHF TEST W3026
HF VOICE W3025
RECEIVING ANTENNA
SAFETY SWITCH
PEDESTAL
TEST OSC
HF VOICE
UHF ANT
UHF INPUT
W3053
UHF INPUT
TB205
TB201
TB203
TB204
TB202
W1565
DRIVE MOTORS W1049
CONTROL W1050
SYNCHRO (AZ) W1047
SYNCHRO (EL) W1048
TB105
TB106
TB107
TB103
TB104
TB101
TB102
SERVO AMPLIFIER RACK
W1042
TB108
TB109
W1034
W1037
W1035
W1036
J401
J402
J403
J404
ELEVATION AMPLIDYNE
AZIMUTH AMPLIDYNE
COMMUNICATION
TB1004
TB1005
TB1009
UHF XMTR REMOTE CONTROL W1043
G/A & A/G VOICE TO DUAL TRACK TAPE RECORDER W1045
TB3
TB4
CABLE T

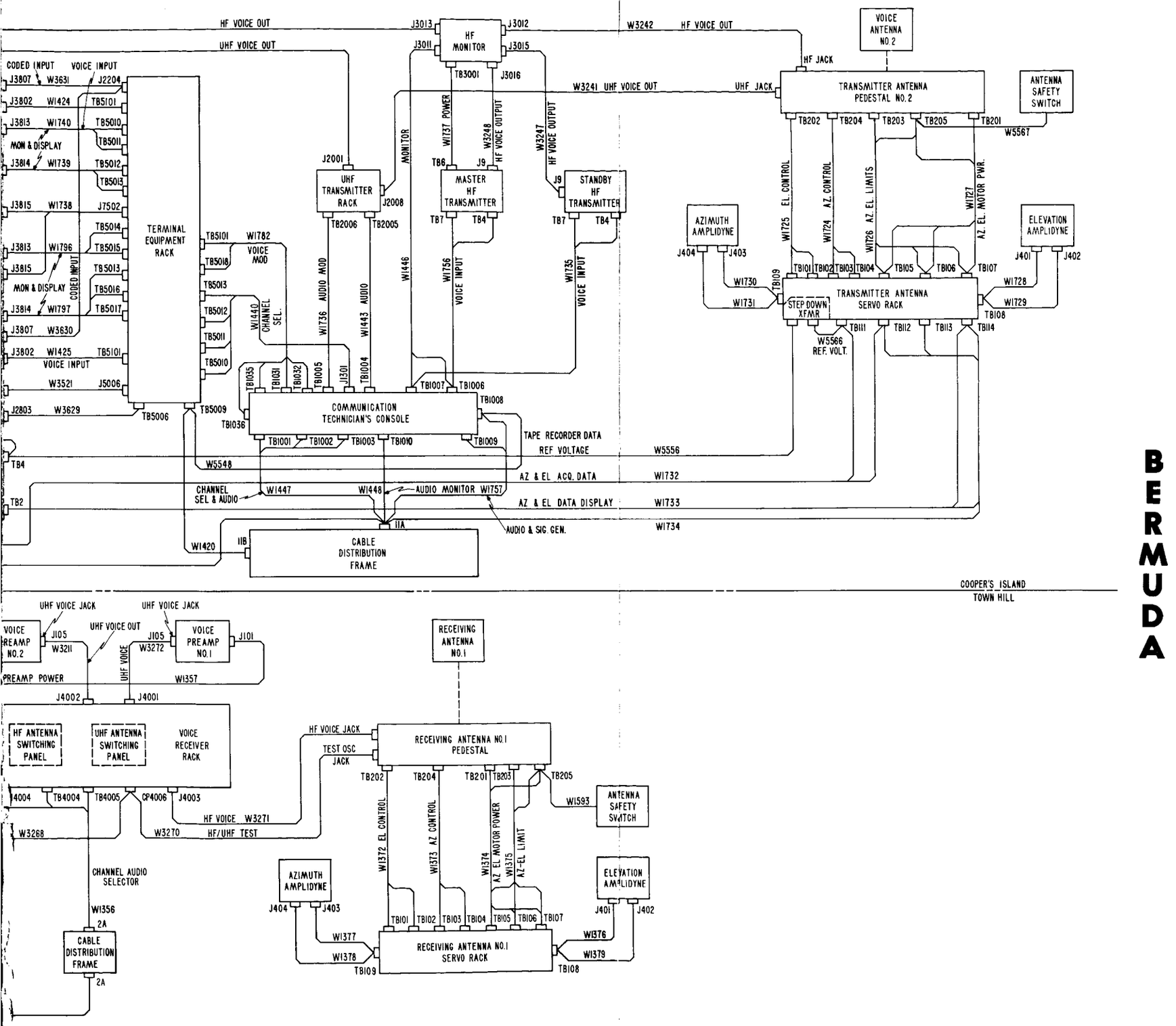

BERMUDA

Figure 2-9. Inter-Equipment Cabling Diagram, Bermuda

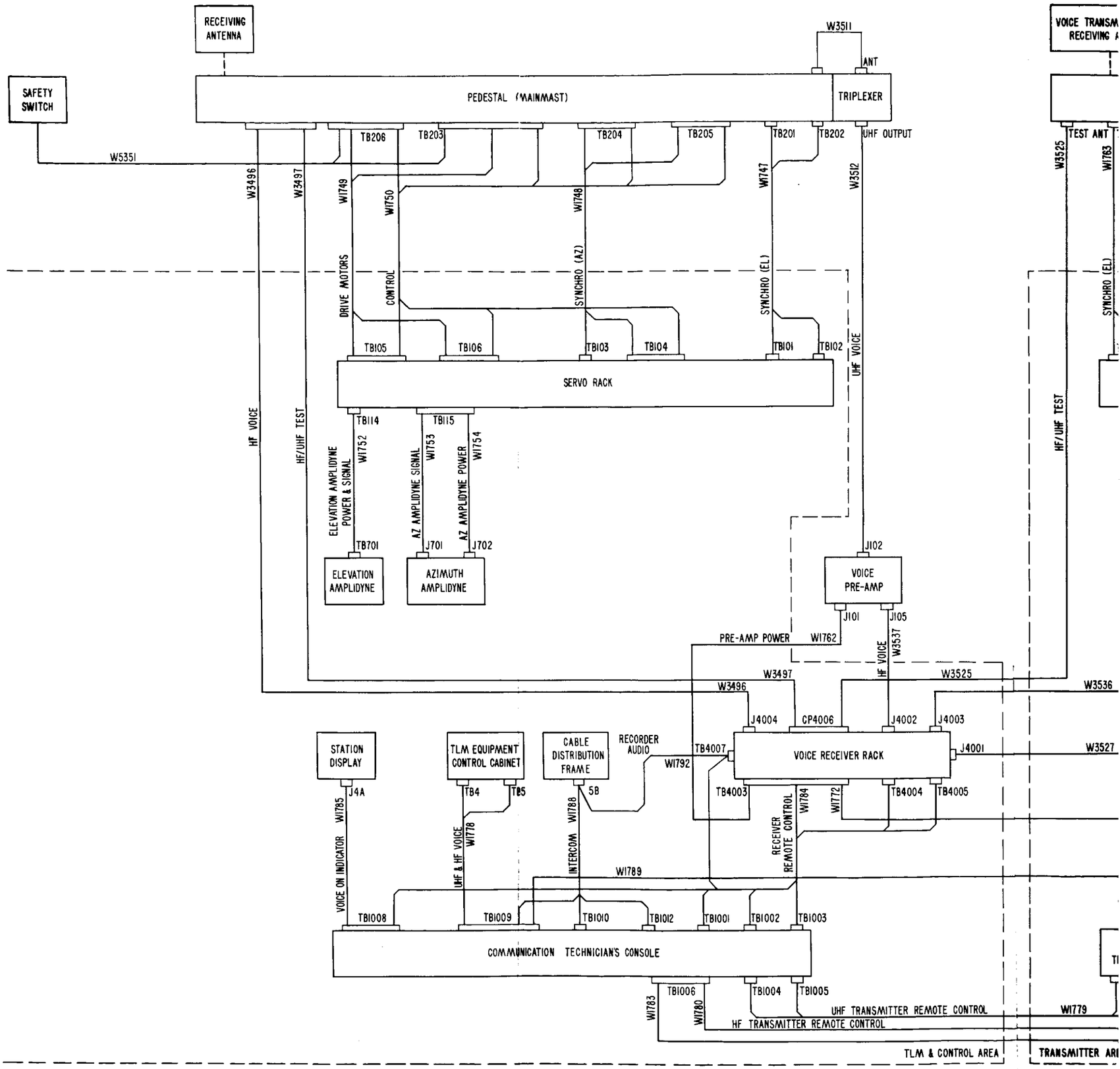
RECEIVING ANTENNA
SAFETY SWITCH
W5351
PEDESTAL (MAINMAST)
TRIPLEXER
W3511
ANT
UHF OUTPUT
TB206
TB203
TB204
TB205
TB201
TB202
W3496
W3497
W1749
W1750
W1748
W1747
W3512
DRIVE MOTORS
CONTROL
SYNCHRO (AZ)
SYNCHRO (EL)
TB105
TB106
TB103
TB104
TB101
TB102
SERVO RACK
UHF VOICE
HF VOICE
HF/UHF TEST
TB114
TB115
ELEVATION AMPLIDYNE POWER & SIGNAL
W1752
AZ AMPLIDYNE SIGNAL
W1753
AZ AMPLIDYNE POWER
W1754
TB701
J701
J702
ELEVATION AMPLIDYNE
AZIMUTH AMPLIDYNE
J102
VOICE PRE-AMP
J101
J105
PRE-AMP POWER
W1762
W3537
W3497
W3525
W3496
W3536
J4004
CP4006
J4002
J4003
STATION DISPLAY
TLM EQUIPMENT CONTROL CABINET
CABLE DISTRIBUTION FRAME
RECORDER AUDIO
TB4007
VOICE RECEIVER RACK
J4001
W3527
W1792
J4A
TB4
TB5
5B
TB4003
W1784
W1772
TB4004
TB4005
W1785
W1778
W1788
VOICE ON INDICATOR
UHF & HF VOICE
INTERCOM
RECEIVER REMOTE CONTROL
W1789
TB1008
TB1009
TB1010
TB1012
TB1001
TB1002
TB1003
COMMUNICATION TECHNICIAN'S CONSOLE
TB1006
TB1004
TB1005
W1783
W1780
UHF TRANSMITTER REMOTE CONTROL
HF TRANSMITTER REMOTE CONTROL
W1779
TLM & CONTROL AREA
TEST ANT
W3525
W1763
SYNCHRO (EL)
HF/UHF TEST

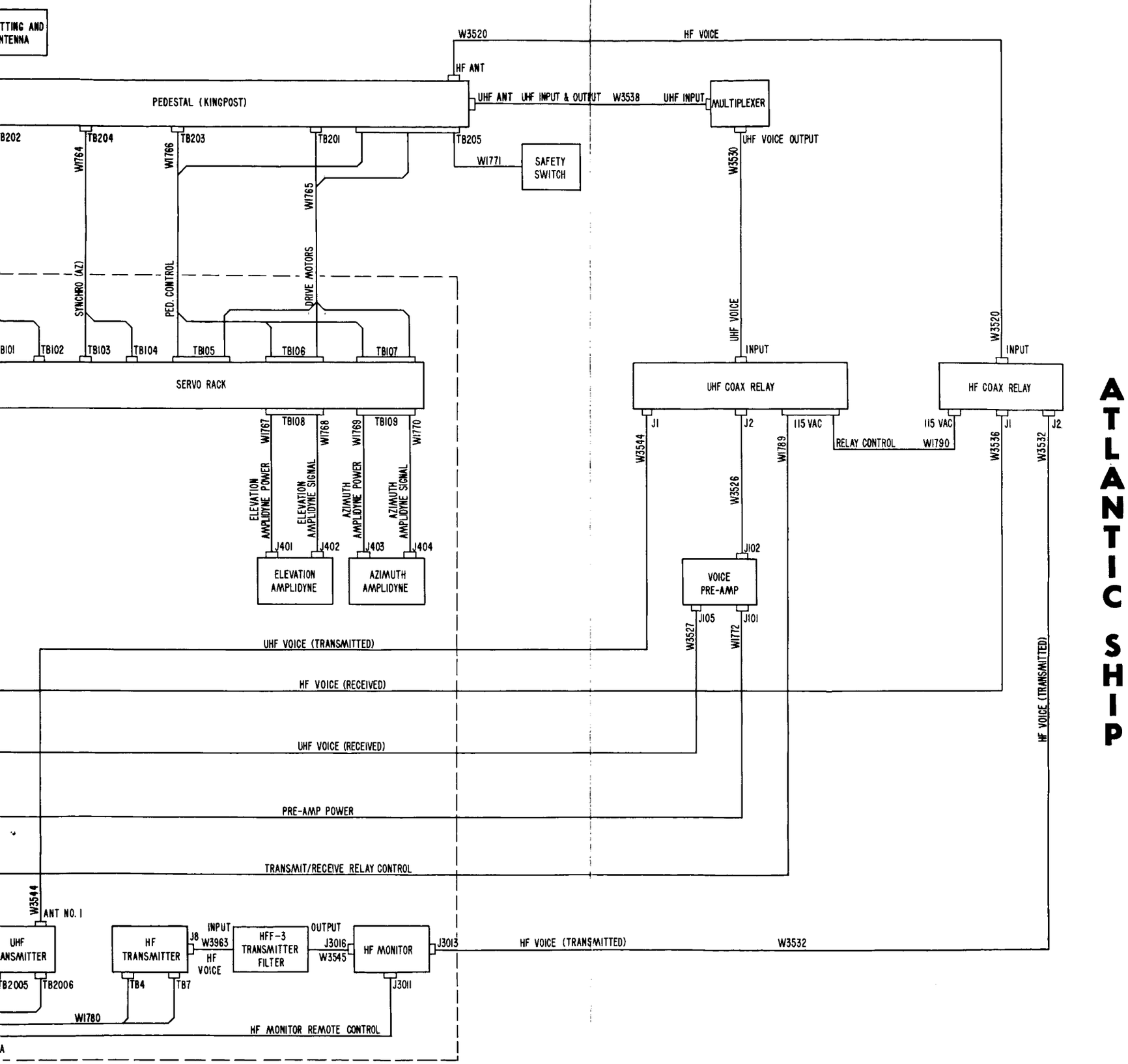

Figure 2-10. **Inter-Equipment Cabling Diagram, Atlantic Ship**

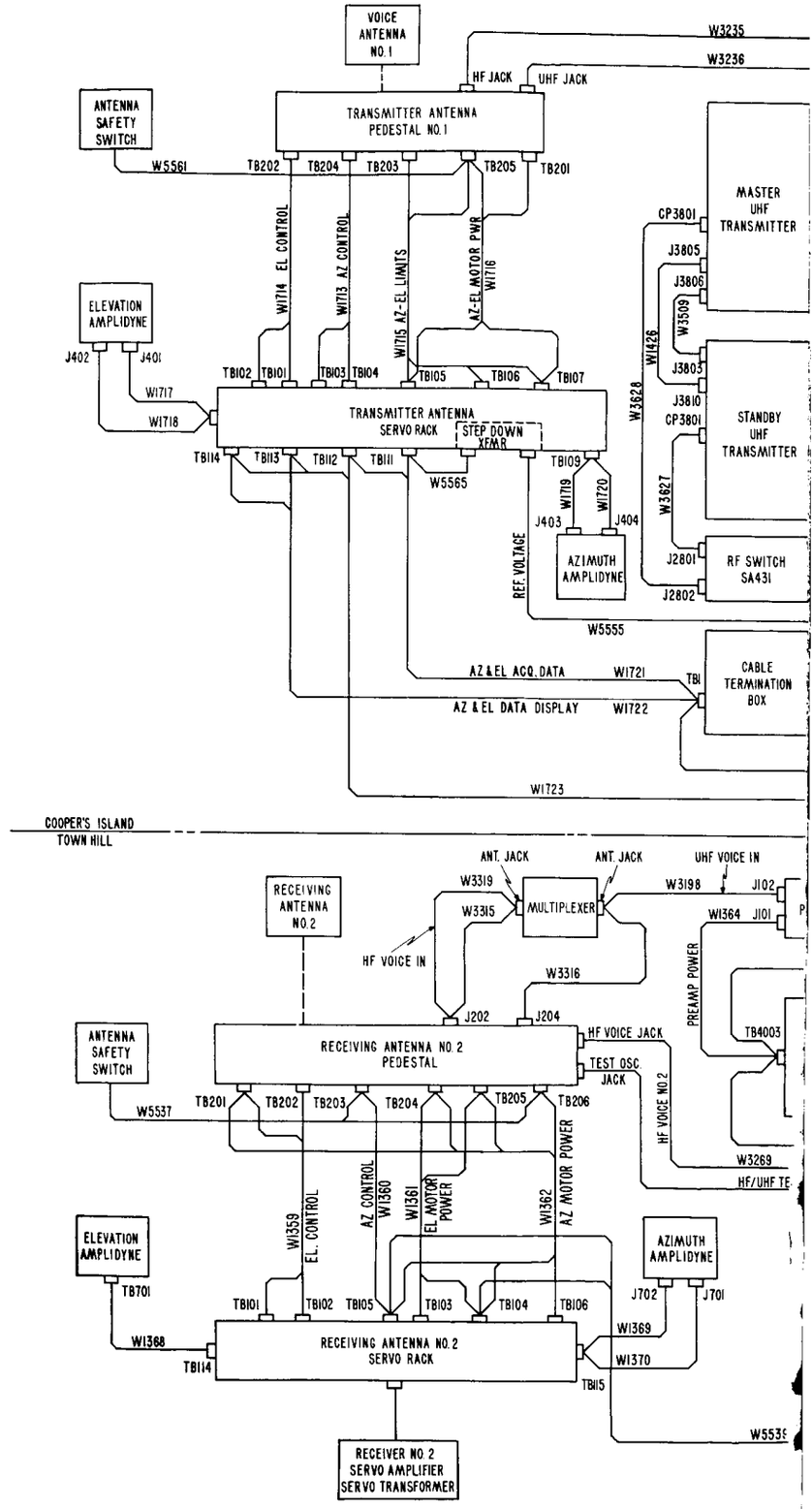
VOICE ANTENNA NO. 1
W3235
W3236
HF JACK
UHF JACK
ANTENNA SAFETY SWITCH
TRANSMITTER ANTENNA PEDESTAL NO. 1
W5561
TB202
TB204
TB203
TB205
TB201
MASTER UHF TRANSMITTER
CP3801
J3805
J3806
W3509
W1714 EL CONTROL
W1713 AZ CONTROL
W1715 AZ-EL LIMITS
AZ-EL MOTOR PWR
W1716
ELEVATION AMPLIDYNE
J402
J401
TB102
TB101
TB103
TB104
TB105
TB106
TB107
W1426
J3803
W1717
W1718
TRANSMITTER ANTENNA SERVO RACK
STEP DOWN XFMR
W3628
J3810
CP3801
STANDBY UHF TRANSMITTER
TB114
TB113
TB112
TB111
W5565
TB109
W1719
W1720
J403
J404
W3827
REF. VOLTAGE
AZIMUTH AMPLIDYNE
J2801
RF SWITCH SA431
J2802
W5555
AZ & EL ACQ. DATA
W1721
TB1
CABLE TERMINATION BOX
AZ & EL DATA DISPLAY
W1722
W1723
COOPER'S ISLAND
TOWN HILL
ANT. JACK
ANT. JACK
UHF VOICE IN
W3319
W3198
J102
RECEIVING ANTENNA NO. 2
W3315
MULTIPLEXER
W1364
J101
HF VOICE IN
W3316
PREAMP POWER
J202
J204
HF VOICE JACK
ANTENNA SAFETY SWITCH
RECEIVING ANTENNA NO. 2 PEDESTAL
TEST OSC. JACK
TB4003
TB201
TB202
TB203
TB204
TB205
TB206
W5537
HF VOICE NO. 2
W3269
HF/UHF TE
W1359 EL. CONTROL
AZ CONTROL W1360
W1361 EL MOTOR POWER
W1362 AZ MOTOR POWER
ELEVATION AMPLIDYNE
AZIMUTH AMPLIDYNE
TB701
TB101
TB102
TB105
TB103
TB104
TB106
J702
J701
W1368
RECEIVING ANTENNA NO. 2 SERVO RACK
W1369
W1370
TB114
TB115
W5539
RECEIVER NO. 2 SERVO AMPLIFIER SERVO TRANSFORMER

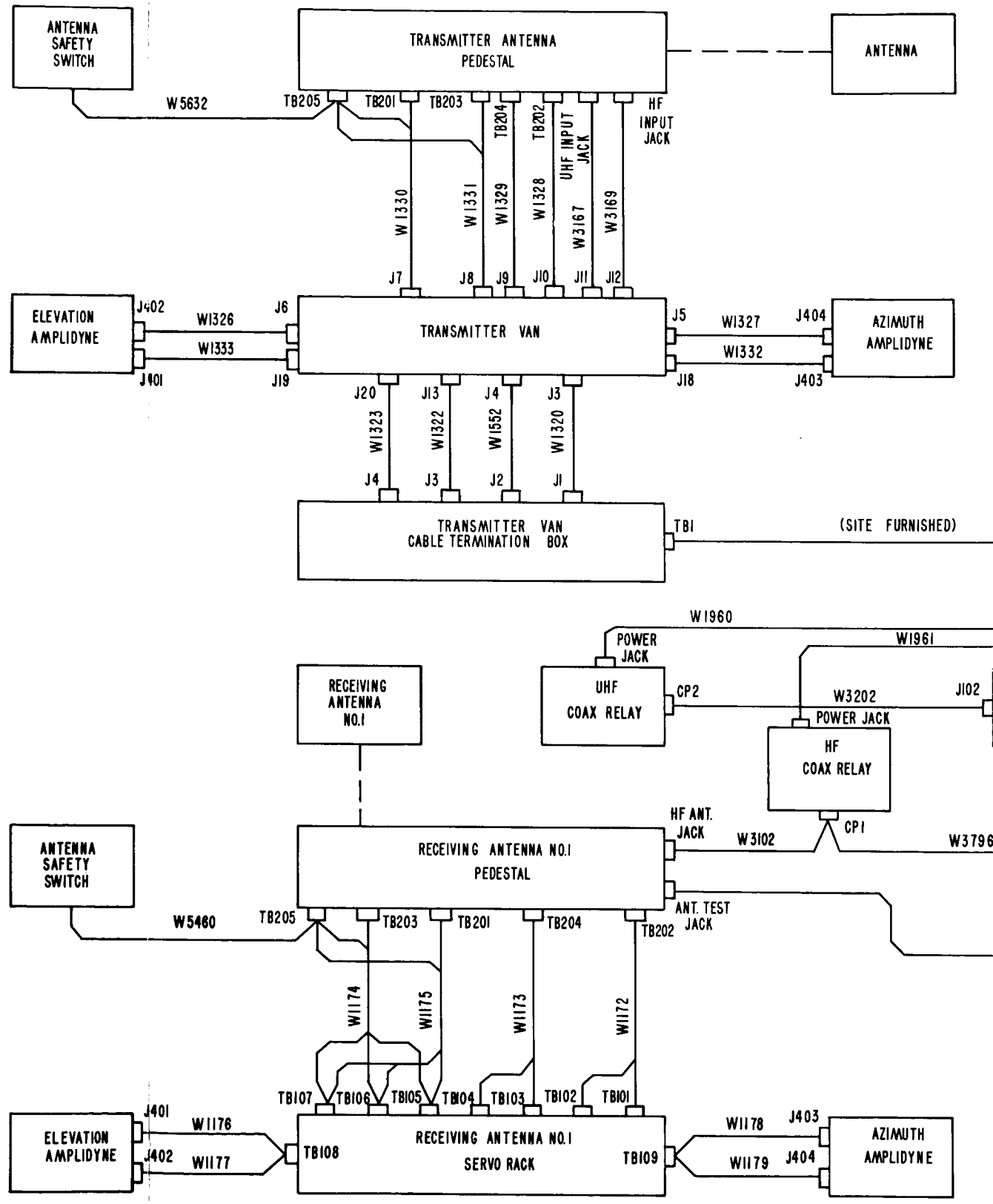
ANTENNA SAFETY SWITCH
TRANSMITTER ANTENNA PEDESTAL
ANTENNA
W5632
TB205
TB201
TB203
TB204
TB202
UHF INPUT JACK
HF INPUT JACK
W1330
W1331
W1329
W1328
W3167
W3169
J7
J8
J9
J10
J11
J12
ELEVATION AMPLIDYNE
J402
W1326
J6
TRANSMITTER VAN
J5
W1327
J404
AZIMUTH AMPLIDYNE
W1333
W1332
J401
J19
J18
J403
J20
J13
J4
J3
W1323
W1322
W1552
W1320
J4
J3
J2
J1
TRANSMITTER VAN CABLE TERMINATION BOX
TB1
(SITE FURNISHED)
W1960
W1961
POWER JACK
UHF COAX RELAY
CP2
W3202
J102
POWER JACK
HF COAX RELAY
RECEIVING ANTENNA NO.1
HF ANT. JACK
W3102
CP1
W3796
ANTENNA SAFETY SWITCH
RECEIVING ANTENNA NO.1 PEDESTAL
ANT. TEST JACK
W5460
TB205
TB203
TB201
TB204
TB202
W1174
W1175
W1173
W1172
TB107
TB106
TB105
TB104
TB103
TB102
TB101
J401
W1176
ELEVATION AMPLIDYNE
J402
W1177
TB108
RECEIVING ANTENNA NO.1 SERVO RACK
TB109
W1178
J403
AZIMUTH AMPLIDYNE
W1179
J404

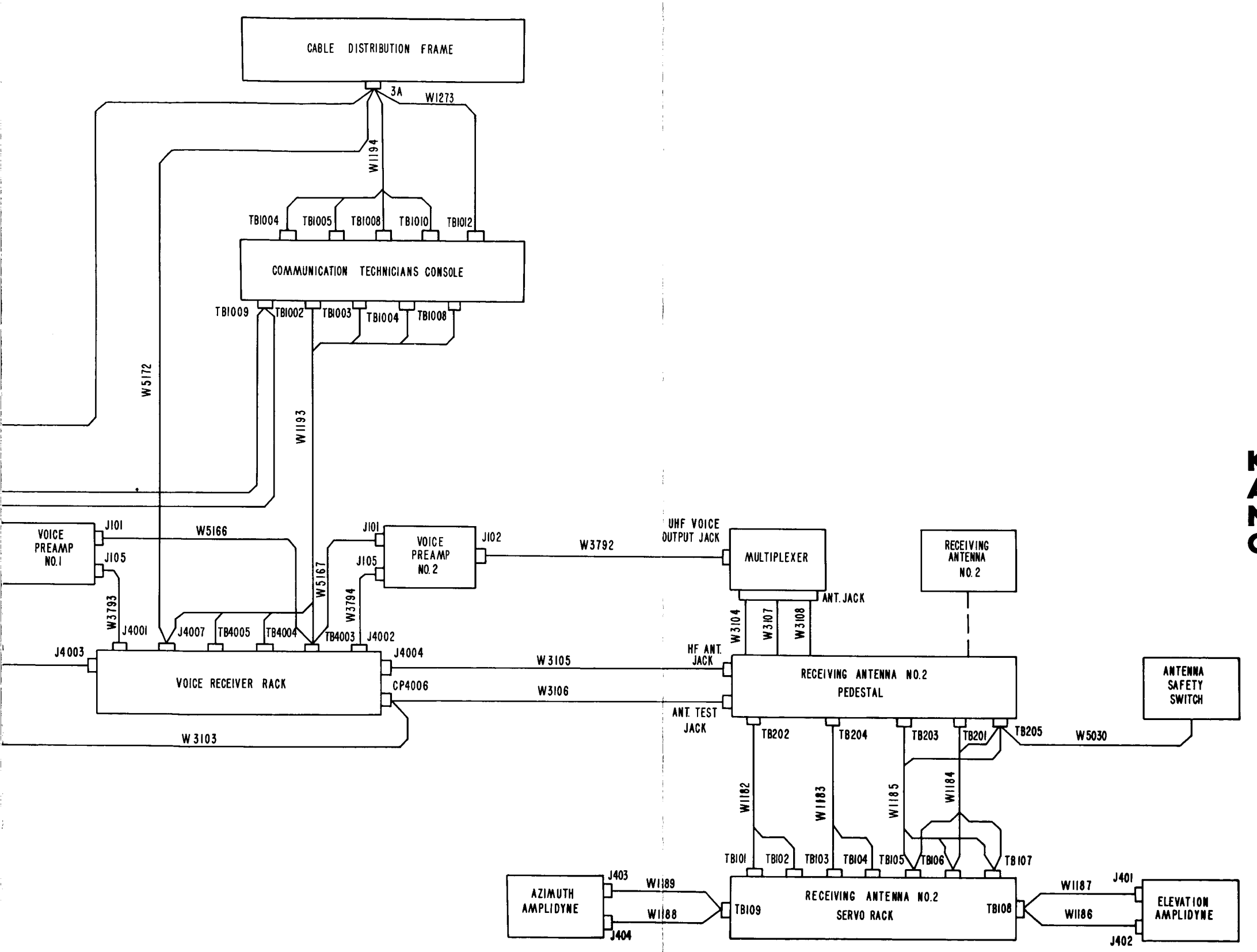

Figure 2-12. Inter-Equipment Cabling Diagram, Kano, Nigeria

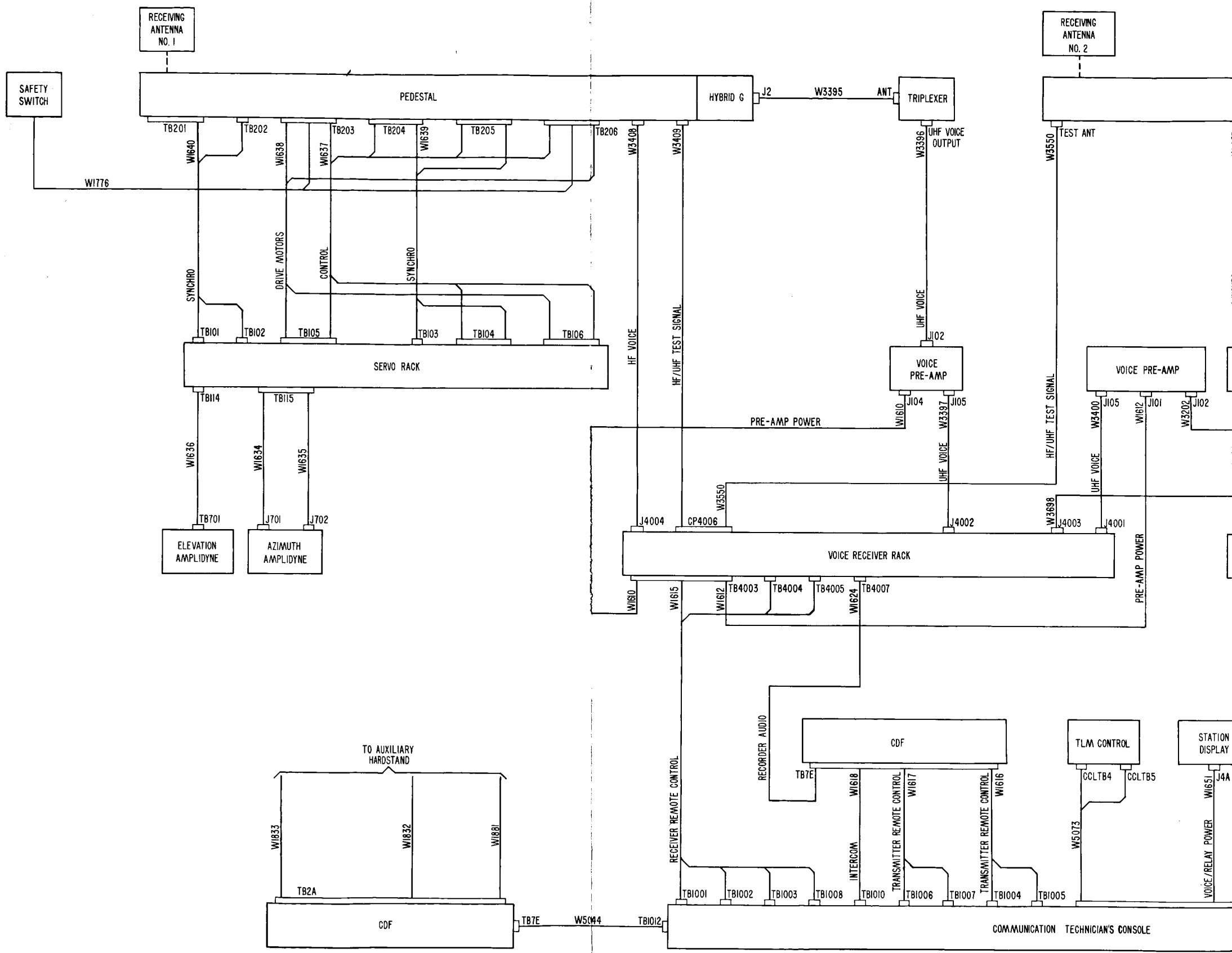
RECEIVING ANTENNA NO. 1
SAFETY SWITCH
PEDESTAL
HYBRID G
J2
W3395
ANT
TRIPLEXER
RECEIVING ANTENNA NO. 2
TB201
TB202
TB203
TB204
TB205
TB206
W1640
W1638
W1637
W1639
W3408
W3409
W3396
UHF VOICE OUTPUT
W3550
TEST ANT
W1776
SYNCHRO
DRIVE MOTORS
CONTROL
SYNCHRO
HF VOICE
HF/UHF TEST SIGNAL
UHF VOICE
J102
TB101
TB102
TB105
TB103
TB104
TB106
SERVO RACK
VOICE PRE-AMP
VOICE PRE-AMP
TB114
TB115
W1610
J104
W3397
J105
PRE-AMP POWER
HF/UHF TEST SIGNAL
W3400
J105
W1612
J101
W3202
J102
W1636
W1634
W1635
UHF VOICE
UHF VOICE
W3550
W3698
TB701
J701
J702
J4004
CP4006
J4002
J4003
J4001
ELEVATION AMPLIDYNE
AZIMUTH AMPLIDYNE
VOICE RECEIVER RACK
PRE-AMP POWER
W1610
W1615
W1612
TB4003
TB4004
TB4005
TB4007
W1624
RECORDER AUDIO
CDF
TLM CONTROL
STATION DISPLAY
TB7E
W1618
W1617
W1616
CCLTB4
CCLTB5
W1651
J4A
TO AUXILIARY HARDSTAND
RECEIVER REMOTE CONTROL
INTERCOM
TRANSMITTER REMOTE CONTROL
TRANSMITTER REMOTE CONTROL
W5073
VOICE/RELAY POWER
W1833
W1832
W1881
TB2A
TB1001
TB1002
TB1003
TB1008
TB1010
TB1006
TB1007
TB1004
TB1005
CDF
TB7E
W5044
TB1012
COMMUNICATION TECHNICIAN'S CONSOLE

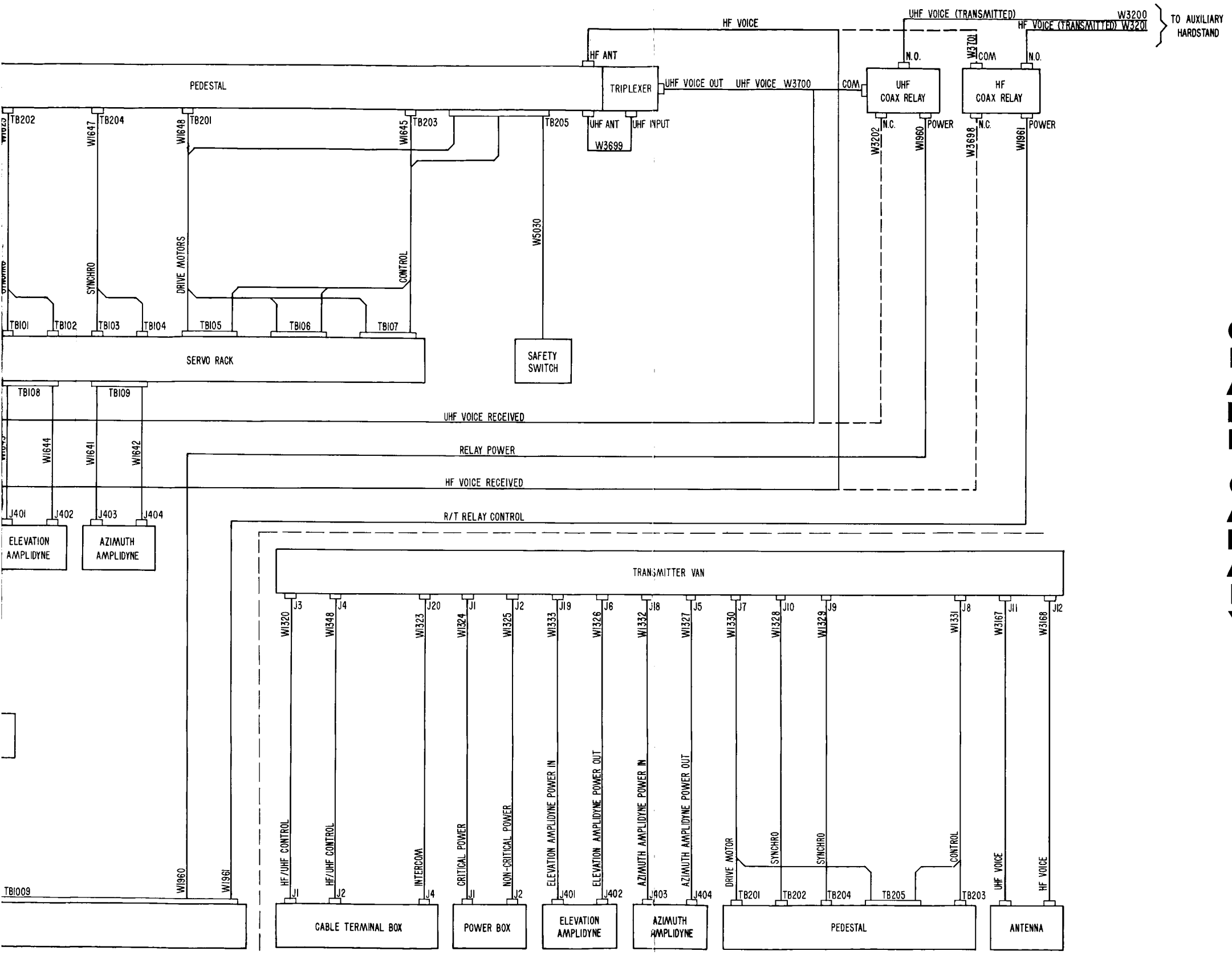

GRAND CANARY I.

Figure 2-11. Inter-Equipment Cabling Diagram, Grand Canary Island

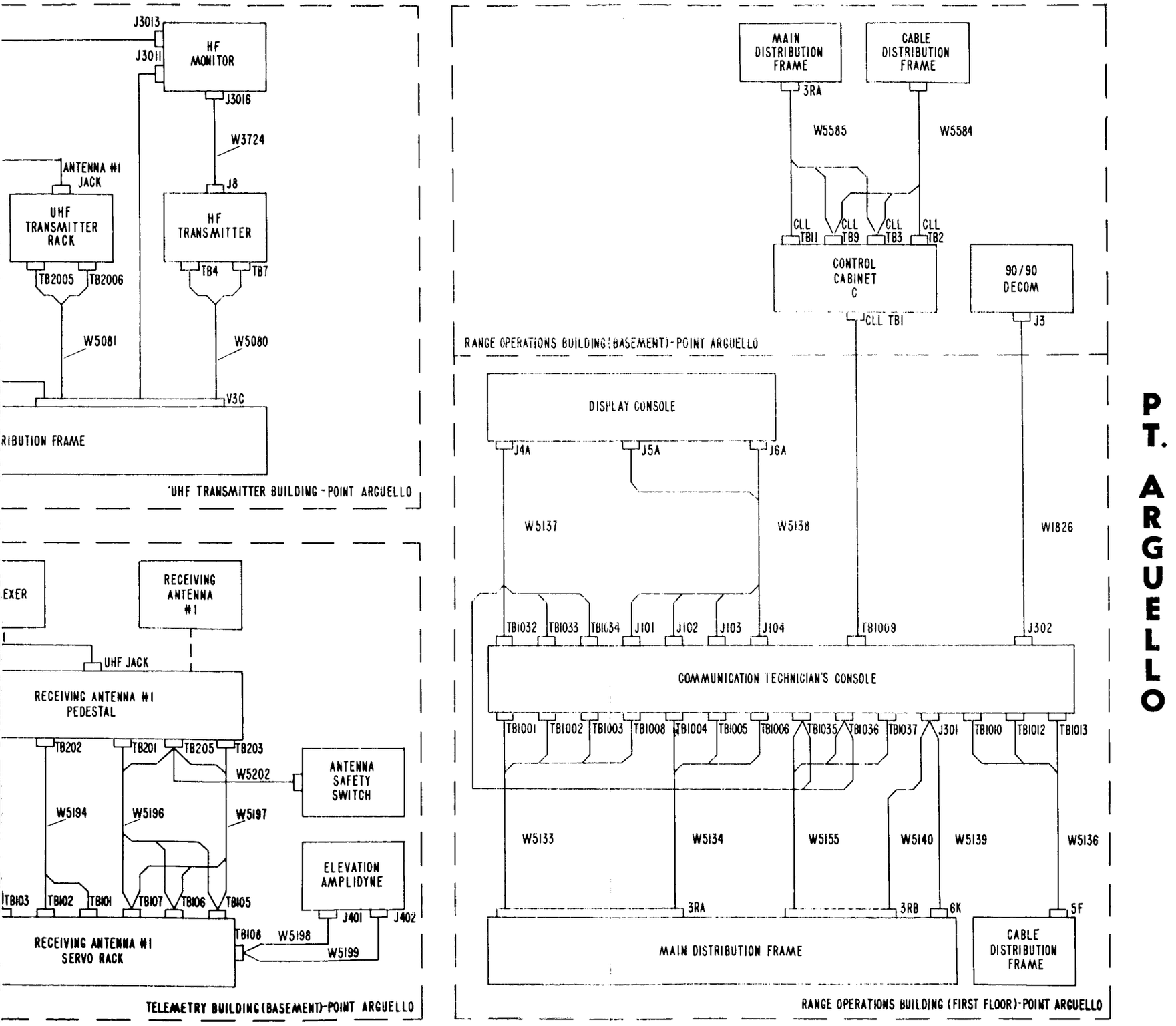

PT. ARGUELLO

Figure 2-18. Inter-Equipment Cabling Diagram, Point Arguello, California

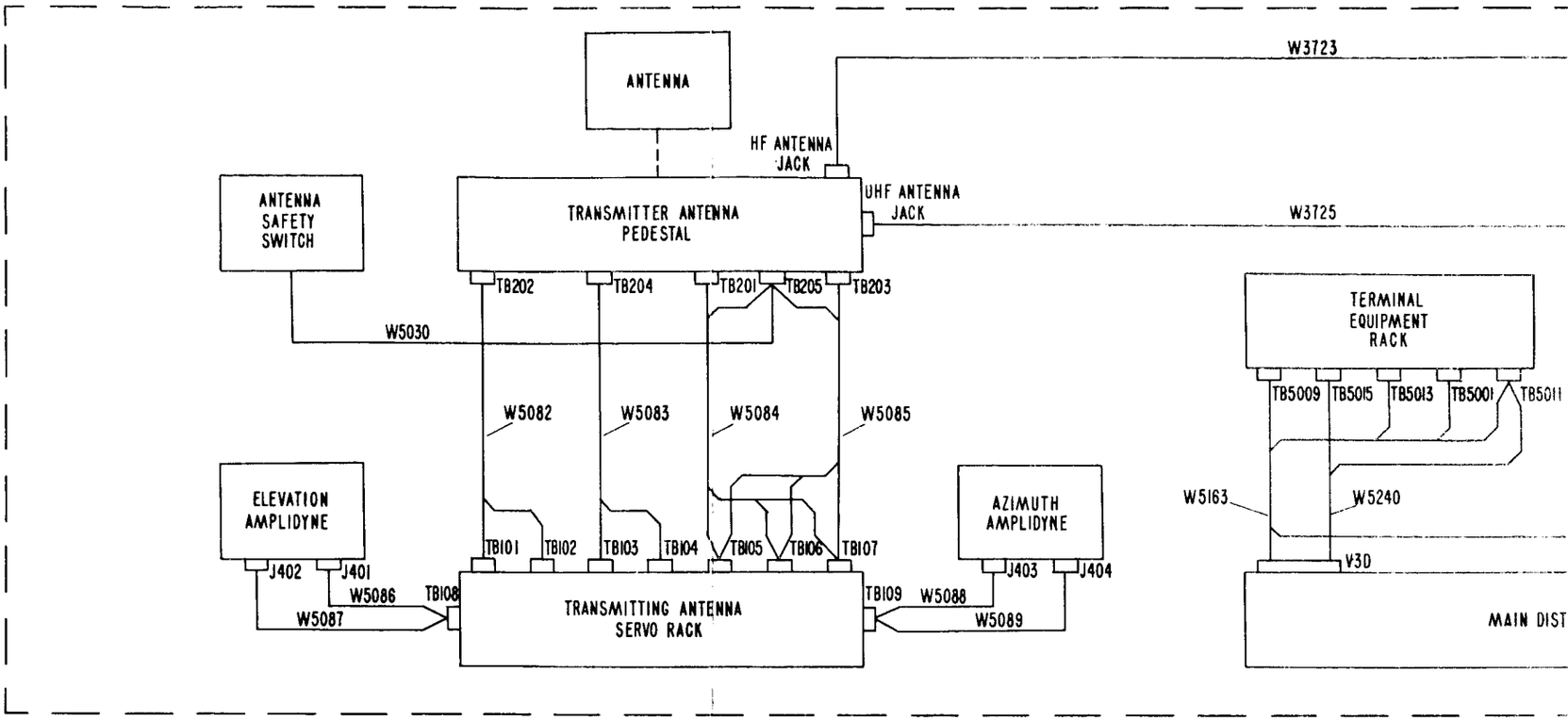
ANTENNA
W3723
HF ANTENNA JACK
UHF ANTENNA JACK
W3725
ANTENNA SAFETY SWITCH
TRANSMITTER ANTENNA PEDESTAL
TB202
TB204
TB201
TB205
TB203
W5030
TERMINAL EQUIPMENT RACK
TB5009
TB5015
TB5013
TB5001
TB5011
W5082
W5083
W5084
W5085
ELEVATION AMPLIDYNE
AZIMUTH AMPLIDYNE
W5163
W5240
TB101
TB102
TB103
TB104
TB105
TB106
TB107
J402
J401
J403
J404
V30
W5086
TB108
TB109
W5088
W5087
W5089
TRANSMITTING ANTENNA SERVO RACK
MAIN DIST

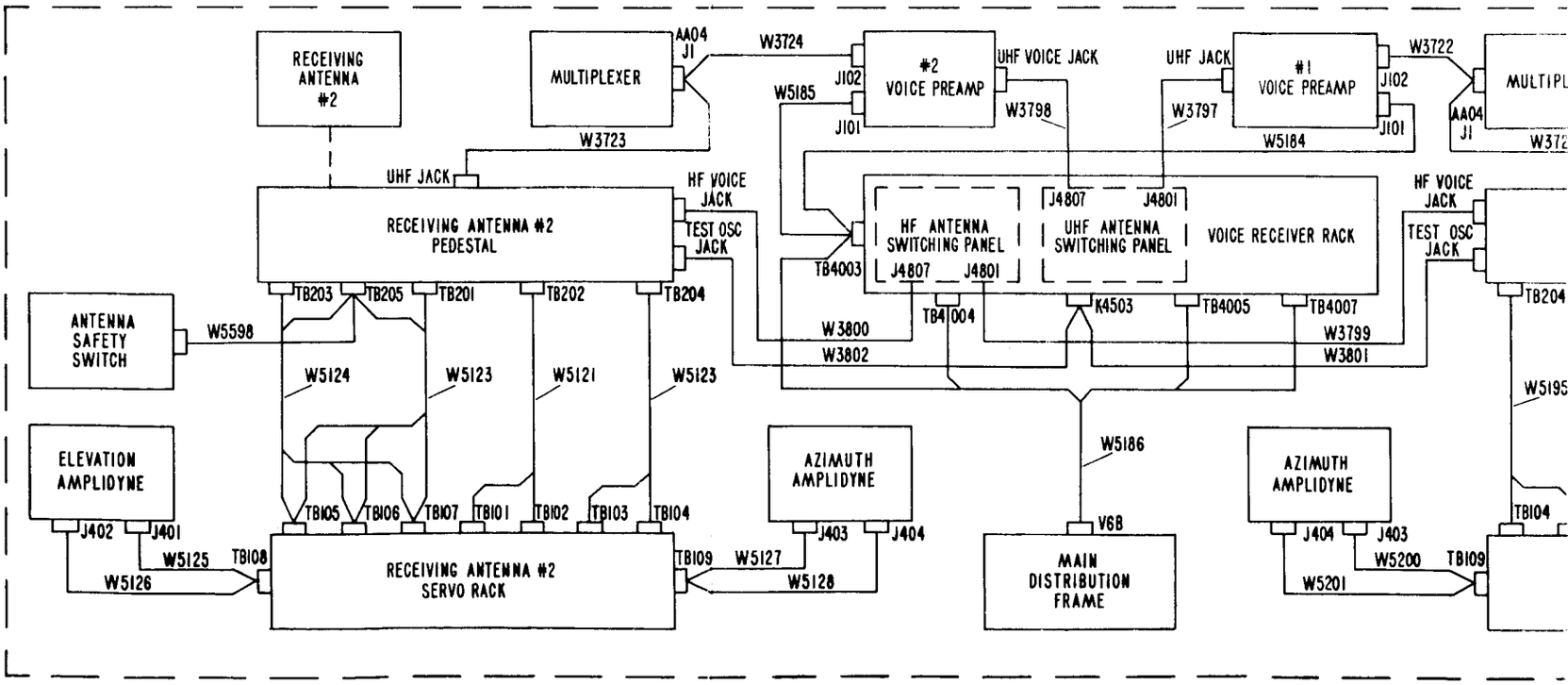
RECEIVING ANTENNA #2
MULTIPLEXER
AA04 J1
W3724
#2 VOICE PREAMP
UHF VOICE JACK
UHF JACK
#1 VOICE PREAMP
W3722
MULTIPL
J102
J101
W5185
W3798
W3797
W5184
W3723
UHF JACK
HF VOICE JACK
TEST OSC JACK
RECEIVING ANTENNA #2 PEDESTAL
HF ANTENNA SWITCHING PANEL
UHF ANTENNA SWITCHING PANEL
VOICE RECEIVER RACK
J4807
J4801
TB4003
TB4004
K4503
TB4005
TB4007
TB203
TB205
TB201
TB202
TB204
ANTENNA SAFETY SWITCH
W5598
W3800
W3802
W3799
W3801
W5124
W5123
W5121
W5123
W5195
ELEVATION AMPLIDYNE
AZIMUTH AMPLIDYNE
W5186
TB105
TB106
TB107
TB101
TB102
TB103
TB104
V68
MAIN DISTRIBUTION FRAME
W5125
W5126
TB108
RECEIVING ANTENNA #2 SERVO RACK
TB109
W5127
W5128
W5200
W5201

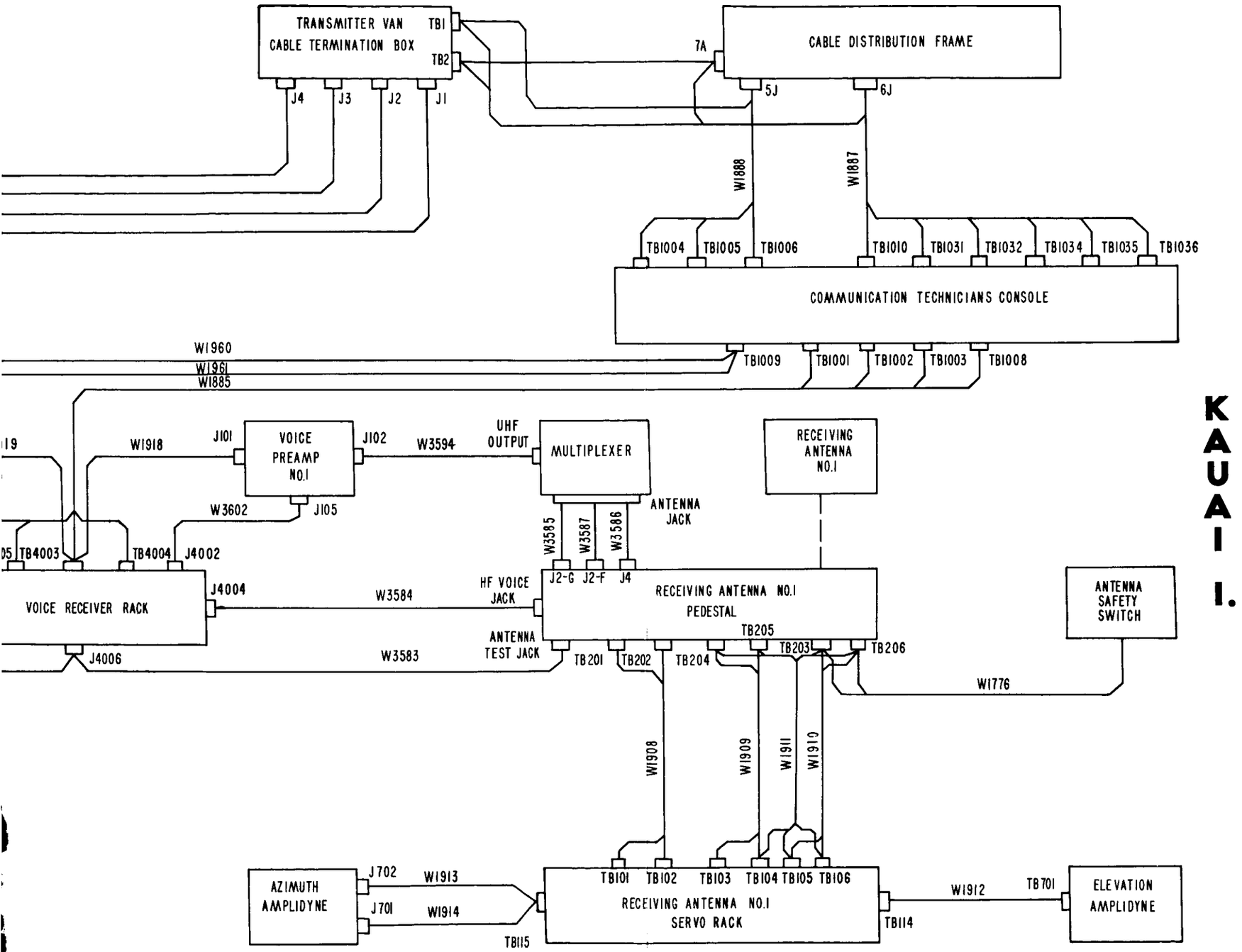

Figure 2-17. Inter-Equipment Cabling Diagram, Kauai Island

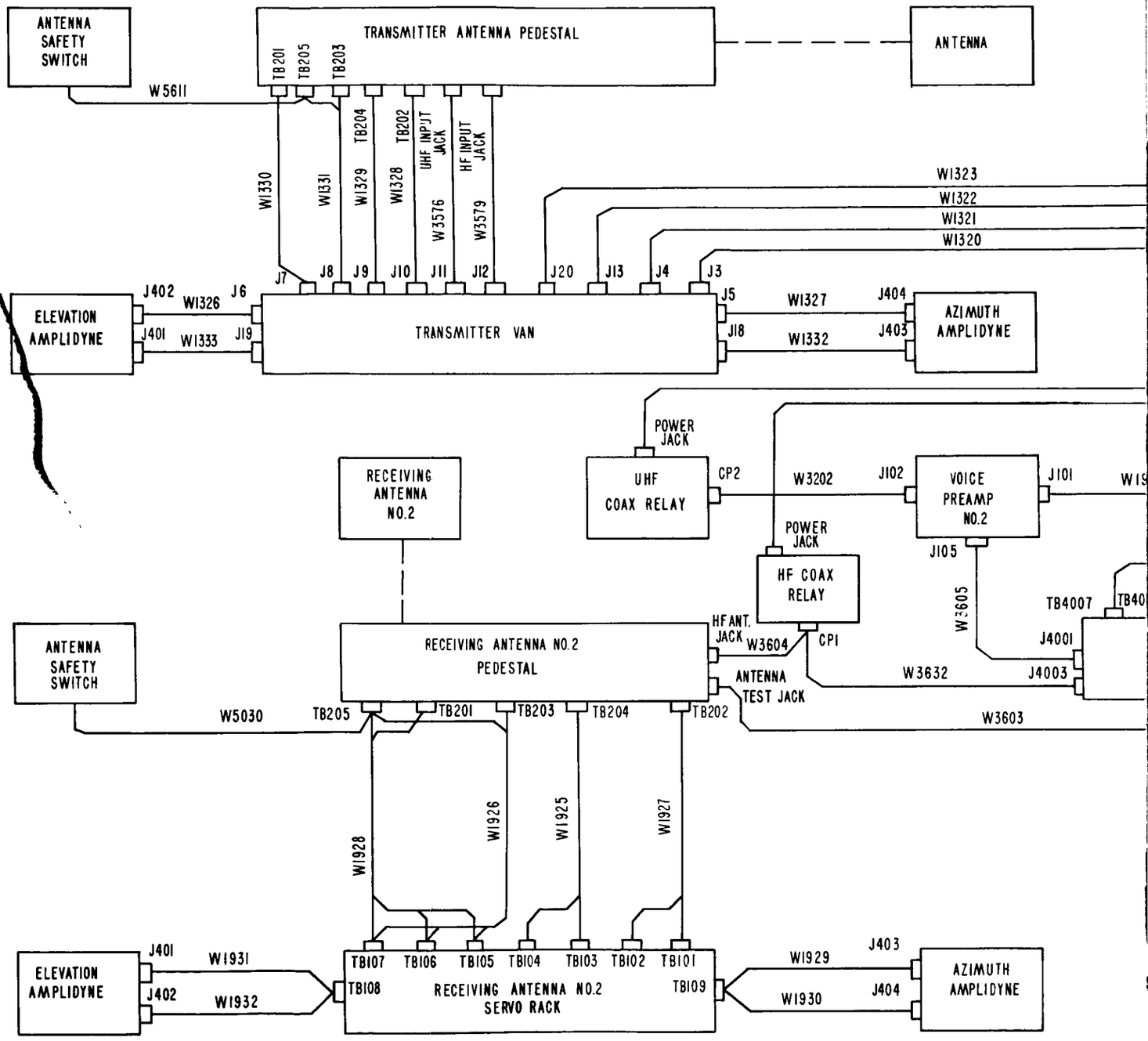
ANTENNA SAFETY SWITCH
TRANSMITTER ANTENNA PEDESTAL
ANTENNA
W5611
TB201
TB205
TB203
TB204
TB202
UHF INPUT JACK
HF INPUT JACK
W1330
W1331
W1329
W1328
W3576
W3579
W1323
W1322
W1321
W1320
J7
J8
J9
J10
J11
J12
J20
J13
J4
J3
J402
W1326
J6
ELEVATION AMPLIDYNE
J401
W1333
J19
TRANSMITTER VAN
J5
W1327
J404
J18
W1332
J403
AZIMUTH AMPLIDYNE
POWER JACK
UHF COAX RELAY
CP2
W3202
J102
VOICE PREAMP NO.2
J101
W19
RECEIVING ANTENNA NO.2
POWER JACK
HF COAX RELAY
J105
W3605
TB4007
TB40
HF ANT. JACK
W3604
CP1
J4001
J4003
W3632
ANTENNA TEST JACK
W3603
ANTENNA SAFETY SWITCH
RECEIVING ANTENNA NO.2 PEDESTAL
W5030
TB205
TB201
TB203
TB204
TB202
W1928
W1926
W1925
W1927
ELEVATION AMPLIDYNE
J401
W1931
J402
W1932
TB107
TB106
TB105
TB104
TB103
TB102
TB101
TB108
RECEIVING ANTENNA NO.2 SERVO RACK
TB109
W1929
J403
W1930
J404
AZIMUTH AMPLIDYNE

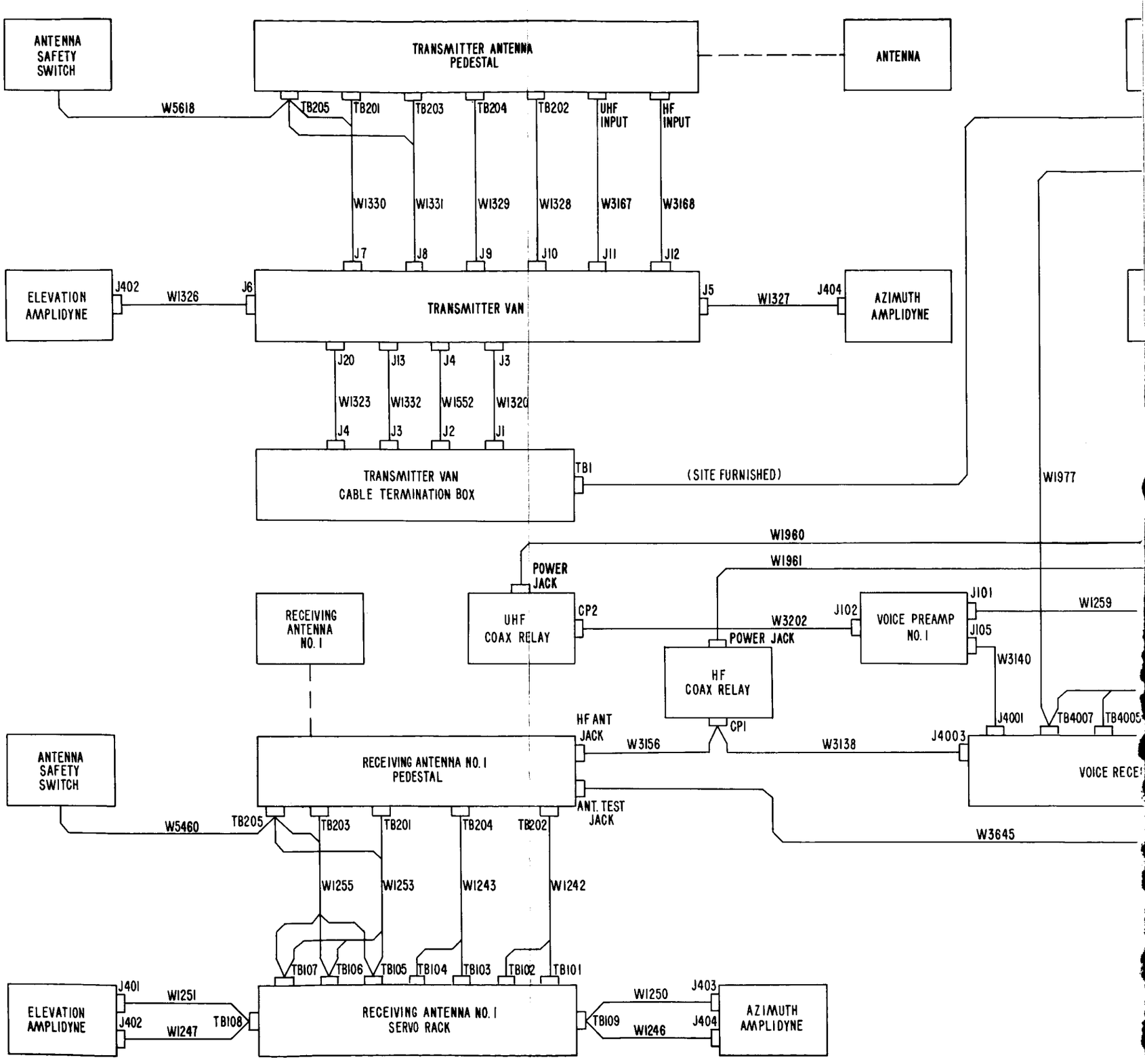
ANTENNA SAFETY SWITCH
TRANSMITTER ANTENNA PEDESTAL
ANTENNA
W5618
TB205
TB201
TB203
TB204
TB202
UHF INPUT
HF INPUT
W1330
W1331
W1329
W1328
W3167
W3168
J7
J8
J9
J10
J11
J12
ELEVATION AMPLIDYNE
J402
W1326
J6
TRANSMITTER VAN
J5
W1327
J404
AZIMUTH AMPLIDYNE
J20
J13
J4
J3
W1323
W1332
W1552
W1320
J4
J3
J2
J1
TRANSMITTER VAN CABLE TERMINATION BOX
TB1
(SITE FURNISHED)
W1977
W1960
W1961
POWER JACK
RECEIVING ANTENNA NO. 1
UHF COAX RELAY
CP2
W3202
J102
VOICE PREAMP NO. 1
J101
J105
W1259
POWER JACK
W3140
HF COAX RELAY
CP1
HF ANT JACK
W3156
W3138
J4001
J4003
TB4007
TB4005
ANTENNA SAFETY SWITCH
RECEIVING ANTENNA NO. 1 PEDESTAL
VOICE RECE
ANT. TEST JACK
W5460
TB205
TB203
TB201
TB204
TB202
W3645
W1255
W1253
W1243
W1242
TB107
TB106
TB105
TB104
TB103
TB102
TB101
ELEVATION AMPLIDYNE
J401
J402
W1251
W1247
TB108
RECEIVING ANTENNA NO. 1 SERVO RACK
TB109
W1250
W1246
J403
J404
AZIMUTH AMPLIDYNE

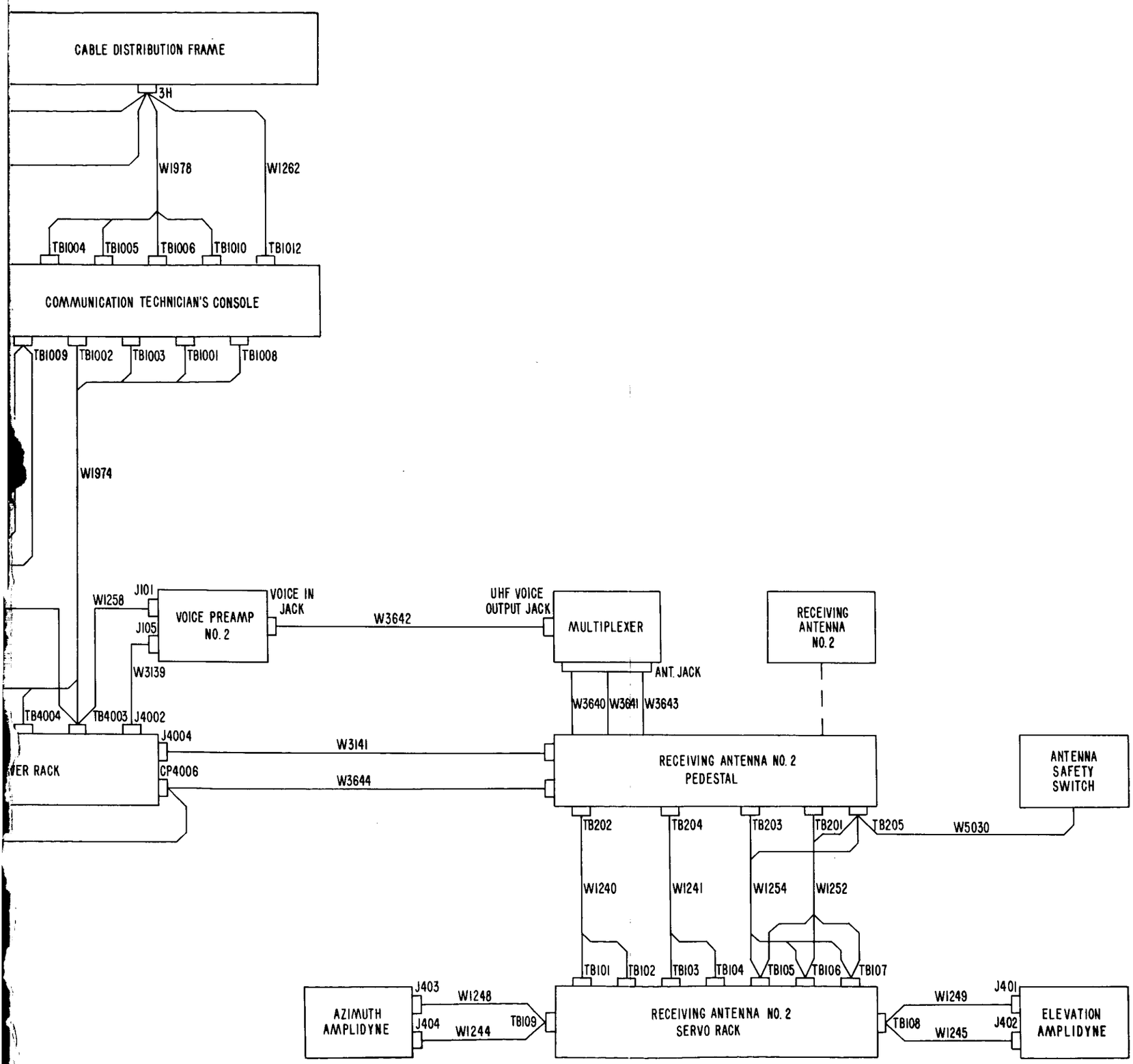

CANTON I.

Figure 2-16. Inter-Equipment Cabling Diagram, Canton Island

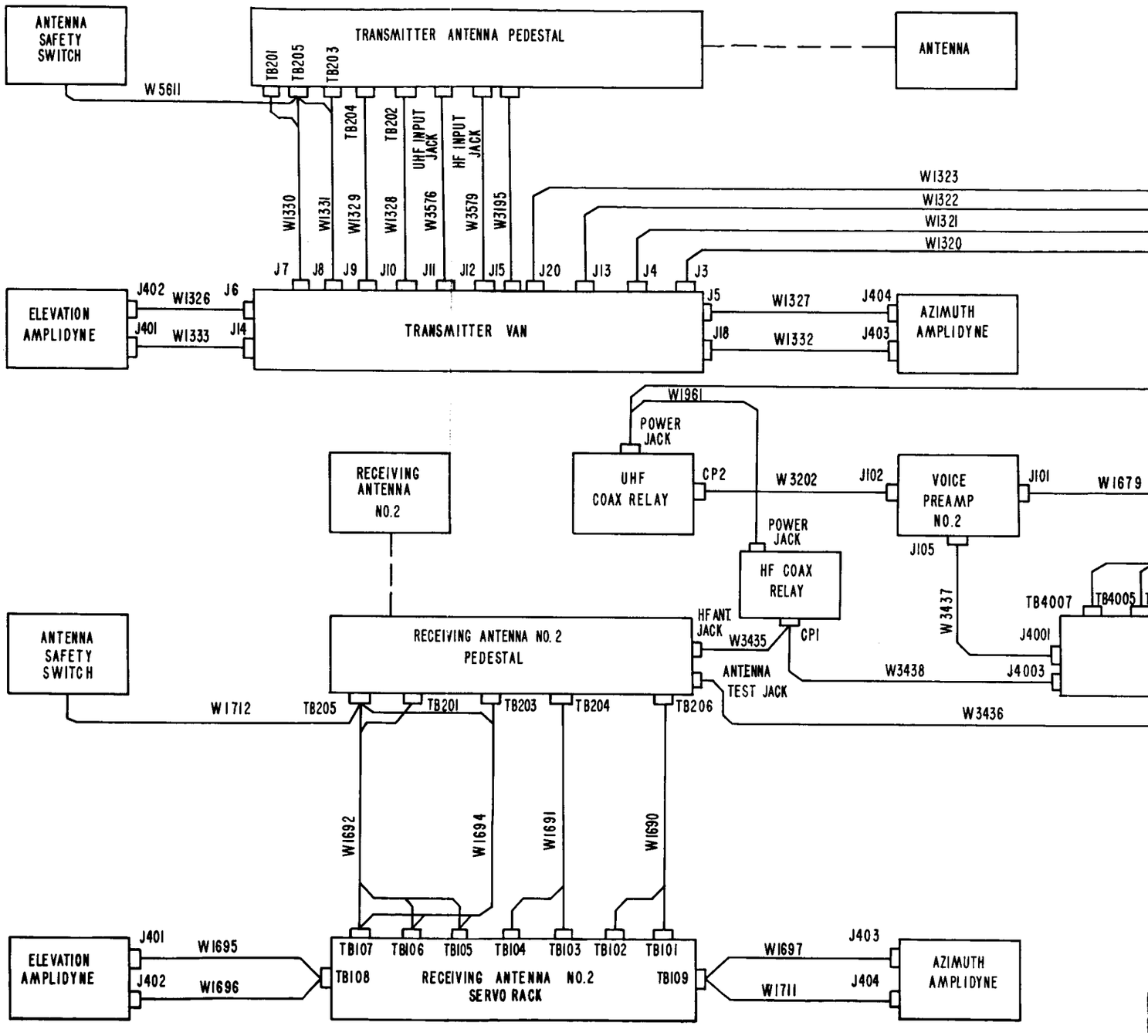
ANTENNA SAFETY SWITCH
TRANSMITTER ANTENNA PEDESTAL
ANTENNA
W5611
TB201
TB205
TB203
TB204
TB202
UHF INPUT JACK
HF INPUT JACK
W1330
W1331
W1329
W1328
W3576
W3579
W3195
W1323
W1322
W1321
W1320
J7
J8
J9
J10
J11
J12
J15
J20
J13
J4
J3
ELEVATION AMPLIDYNE
J402
W1326
J6
J401
W1333
J14
TRANSMITTER VAN
J5
W1327
J404
J18
W1332
J403
AZIMUTH AMPLIDYNE
W1961
POWER JACK
RECEIVING ANTENNA NO.2
UHF COAX RELAY
CP2
W3202
J102
VOICE PREAMP NO.2
J101
W1679
POWER JACK
HF COAX RELAY
J105
W3437
TB4007
TB4005
ANTENNA SAFETY SWITCH
RECEIVING ANTENNA NO. 2 PEDESTAL
HF ANT. JACK
W3435
CP1
J4001
ANTENNA TEST JACK
W3438
J4003
W1712
TB205
TB201
TB203
TB204
TB206
W3436
W1692
W1694
W1691
W1690
ELEVATION AMPLIDYNE
J401
W1695
J402
W1696
TB107
TB106
TB105
TB104
TB103
TB102
TB101
TB108
RECEIVING ANTENNA NO.2 SERVO RACK
TB109
W1697
J403
W1711
J404
AZIMUTH AMPLIDYNE

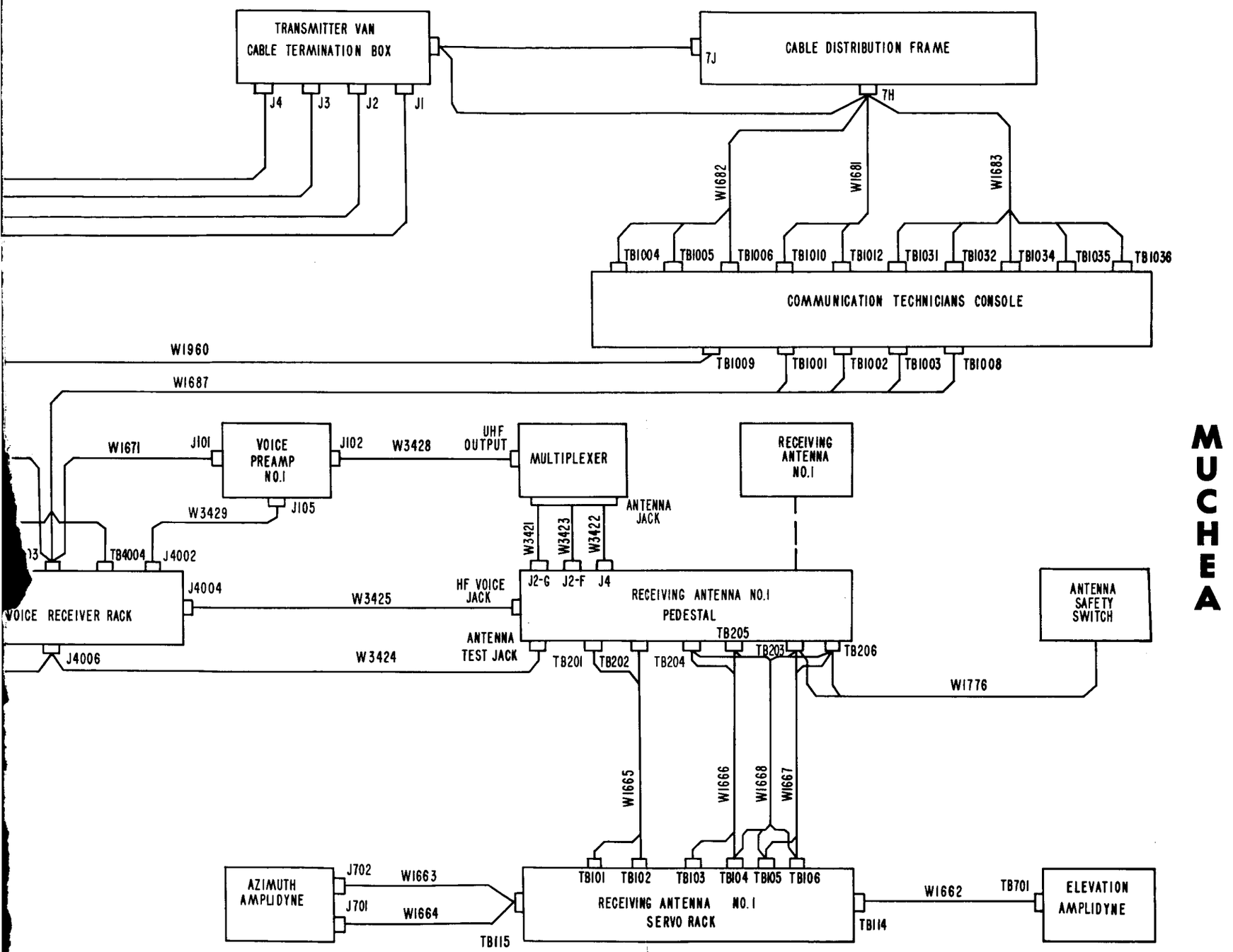

Figure 2-15. **Inter-Equipment Cabling Diagram, Muchea, Australia**

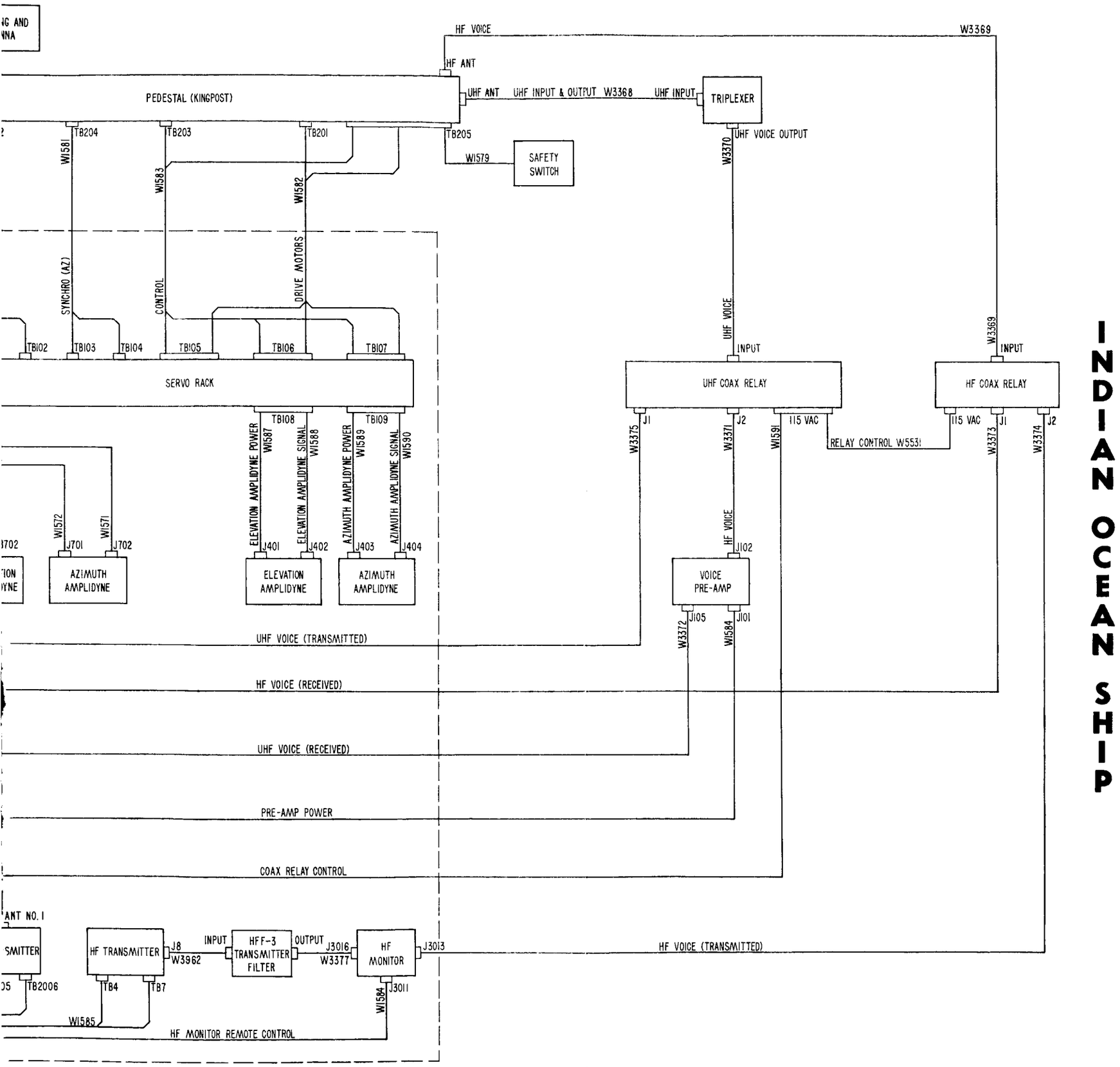

INDIAN OCEAN SHIP

Figure 2-14. Inter-Equipment Cabling Diagram, Indian Ocean Ship

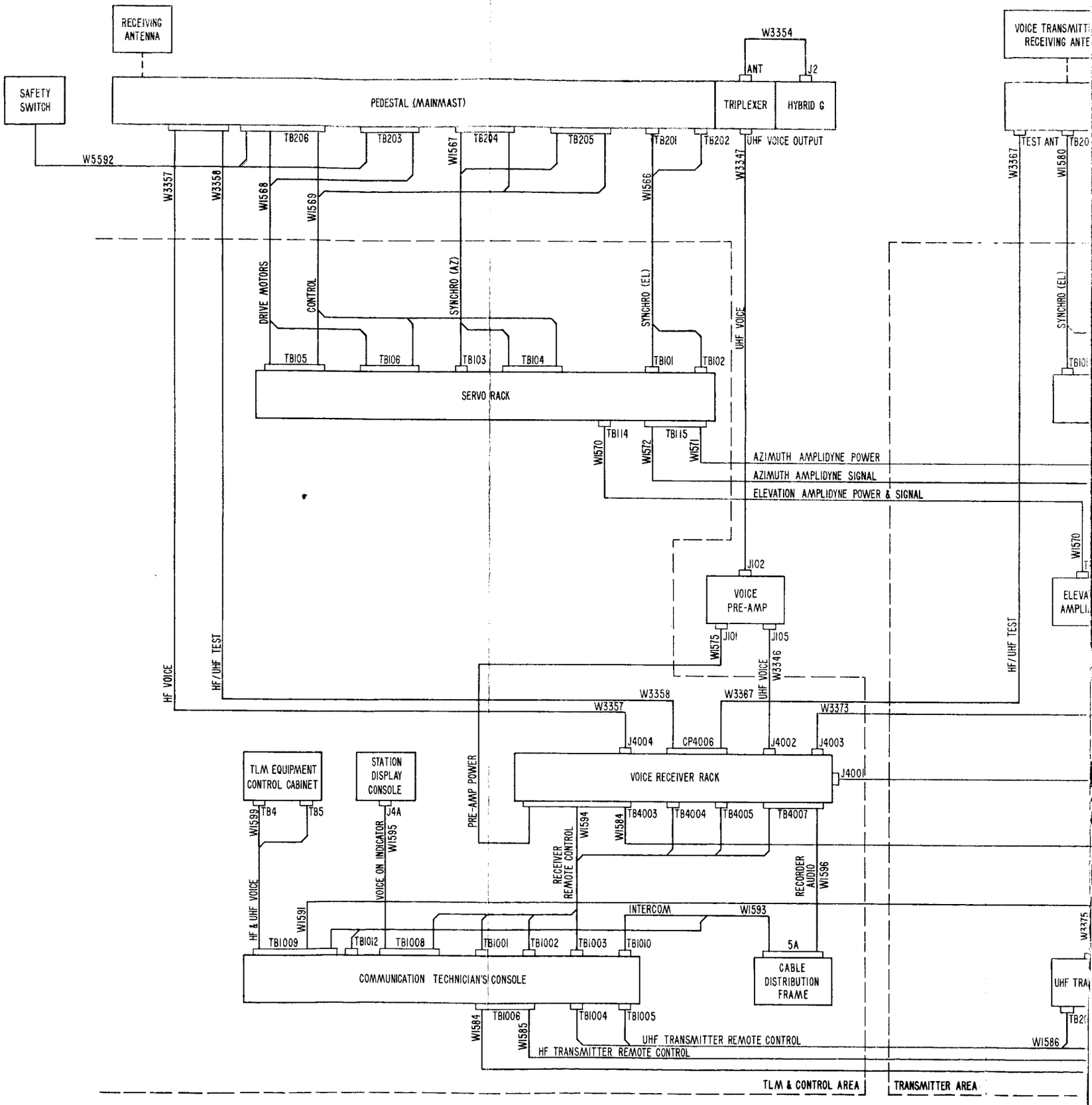
RECEIVING ANTENNA
SAFETY SWITCH
PEDESTAL (MAINMAST)
TRIPLEXER
HYBRID G
W3354
ANT
J2
UHF VOICE OUTPUT
W5592
TB206
TB203
TB204
TB205
TB201
TB202
W3357
W3358
W1568
W1569
W1567
W1566
W3347
DRIVE MOTORS
CONTROL
SYNCHRO (AZ)
SYNCHRO (EL)
UHF VOICE
TB105
TB106
TB103
TB104
TB101
TB102
SERVO RACK
TB114
TB115
W1570
W1572
W1571
AZIMUTH AMPLIDYNE POWER
AZIMUTH AMPLIDYNE SIGNAL
ELEVATION AMPLIDYNE POWER & SIGNAL
J102
VOICE PRE-AMP
J101
J105
W1575
W3346
HF VOICE
HF/UHF TEST
W3358
W3357
W3367
W3373
J4004
CP4006
J4002
J4003
J4001
VOICE RECEIVER RACK
TLM EQUIPMENT CONTROL CABINET
STATION DISPLAY CONSOLE
TB4
TB5
J4A
W1599
VOICE ON INDICATOR
W1595
PRE-AMP POWER
W1594
W1584
TB4003
TB4004
TB4005
TB4007
RECEIVER REMOTE CONTROL
RECORDER AUDIO
W1596
HF & UHF VOICE
W1591
INTERCOM
W1593
TB1009
TB1012
TB1008
TB1001
TB1002
TB1003
TB1010
5A
COMMUNICATION TECHNICIAN'S CONSOLE
CABLE DISTRIBUTION FRAME
TB1006
TB1004
TB1005
W1584
W1585
UHF TRANSMITTER REMOTE CONTROL
HF TRANSMITTER REMOTE CONTROL
TLM & CONTROL AREA
TRANSMITTER AREA
TEST ANT
W3367
W1580
SYNCHRO (EL)
W1570
HF/UHF TEST
W3375
W1586

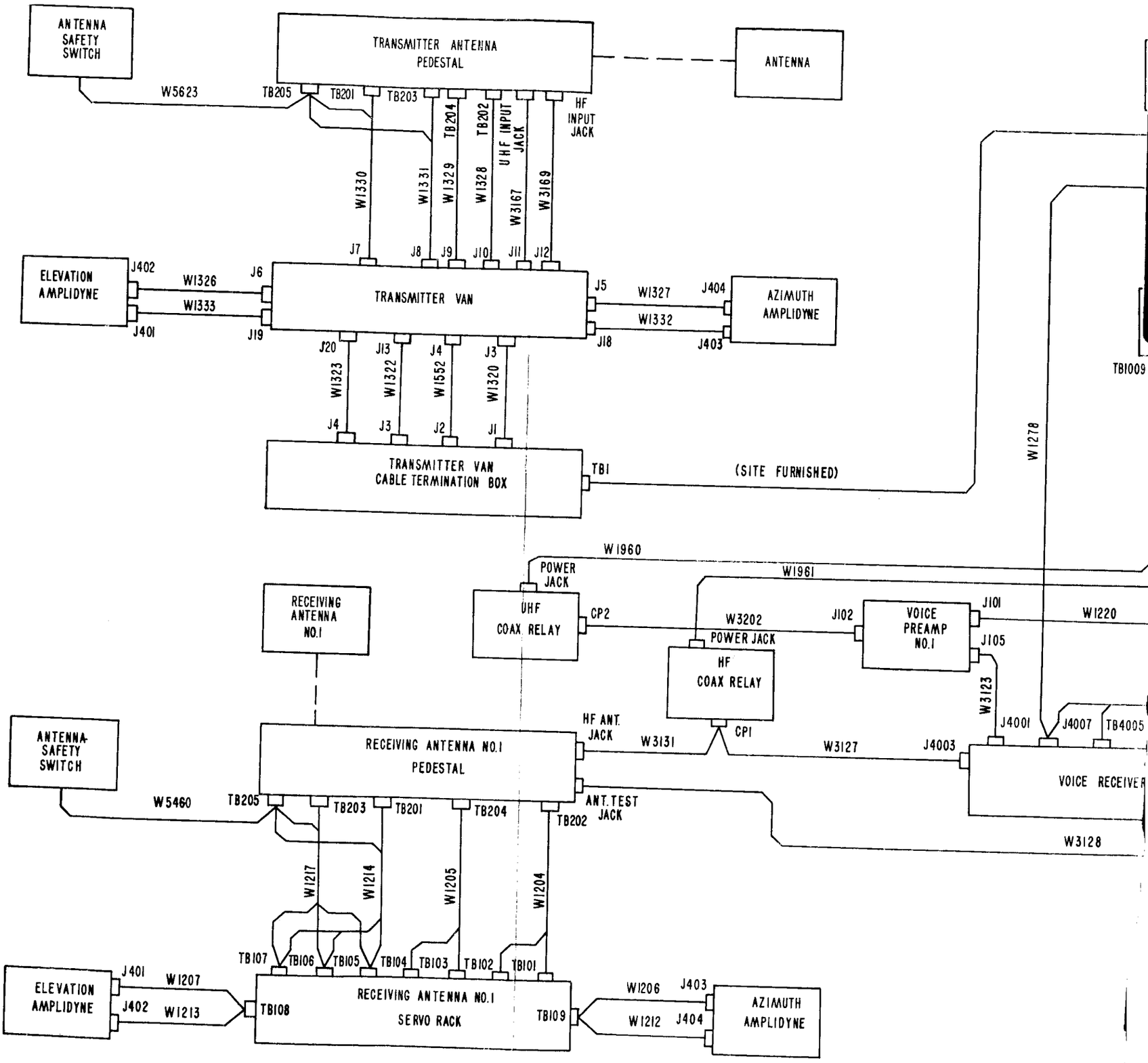
ANTENNA SAFETY SWITCH
TRANSMITTER ANTENNA PEDESTAL
ANTENNA
W5623
TB205
TB201
TB203
TB204
TB202
UHF INPUT JACK
HF INPUT JACK
W1330
W1331
W1329
W1328
W3167
W3169
J7
J8
J9
J10
J11
J12
ELEVATION AMPLIDYNE
J402
W1326
J6
W1333
J401
J19
TRANSMITTER VAN
J5
W1327
J404
W1332
J18
J403
AZIMUTH AMPLIDYNE
J20
J13
J4
J3
W1323
W1322
W1552
W1320
J4
J3
J2
J1
TRANSMITTER VAN CABLE TERMINATION BOX
TB1
(SITE FURNISHED)
W1278
TB1009
W1960
POWER JACK
W1961
RECEIVING ANTENNA NO.1
UHF COAX RELAY
CP2
W3202
J102
VOICE PREAMP NO.1
J101
W1220
POWER JACK
J105
HF COAX RELAY
W3123
J4001
J4007
TB4005
ANTENNA SAFETY SWITCH
HF ANT. JACK
W3131
CP1
W3127
J4003
RECEIVING ANTENNA NO.1 PEDESTAL
VOICE RECEIVER
W5460
TB205
TB203
TB201
TB204
TB202
ANT. TEST JACK
W3128
W1217
W1214
W1205
W1204
TB107
TB106
TB105
TB104
TB103
TB102
TB101
ELEVATION AMPLIDYNE
J401
W1207
J402
W1213
TB108
RECEIVING ANTENNA NO.1 SERVO RACK
TB109
W1206
J403
W1212
J404
AZIMUTH AMPLIDYNE

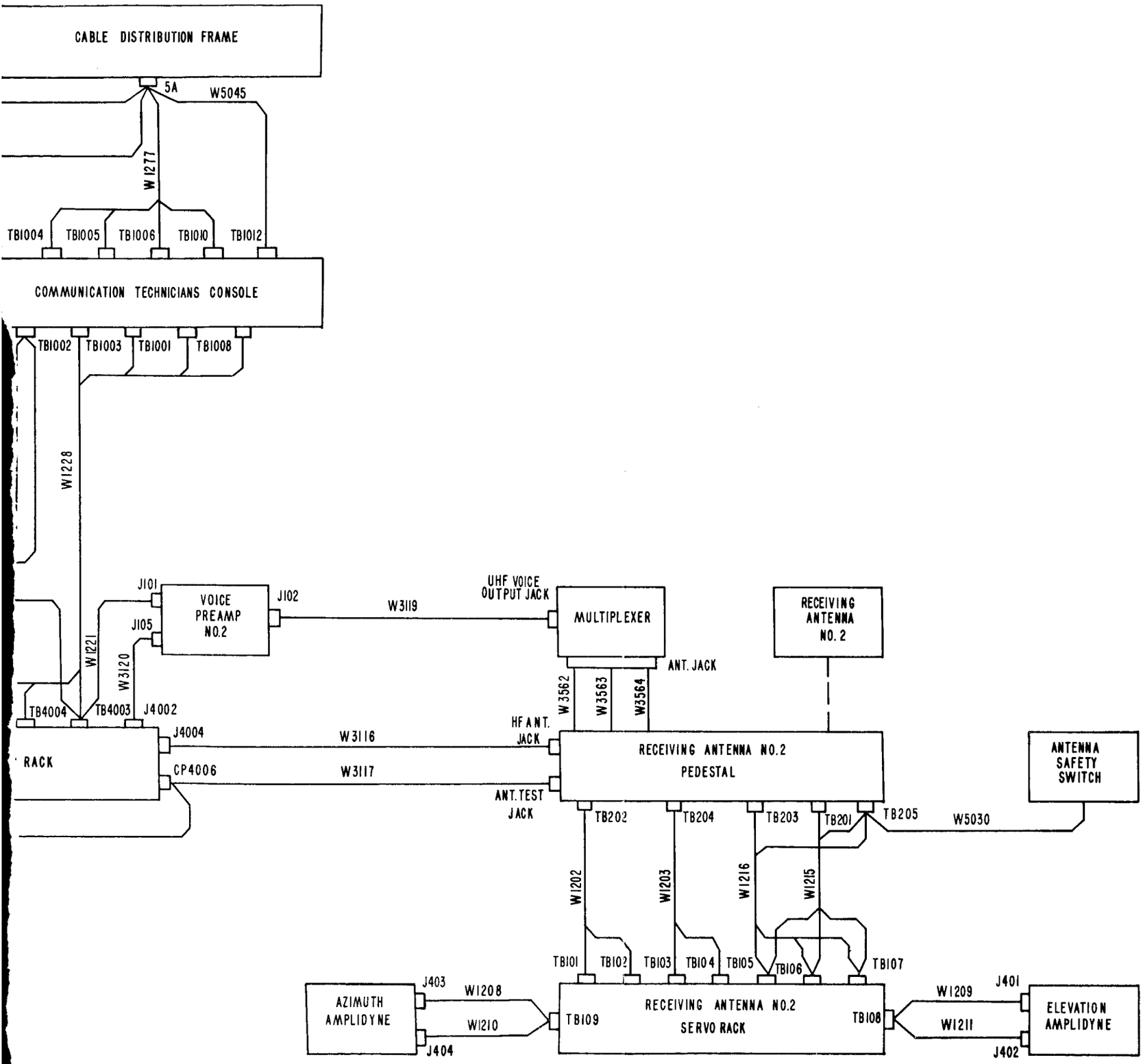

ZANZIBAR

Figure 2-13. Inter-Equipment Cabling Diagram, Zanzibar

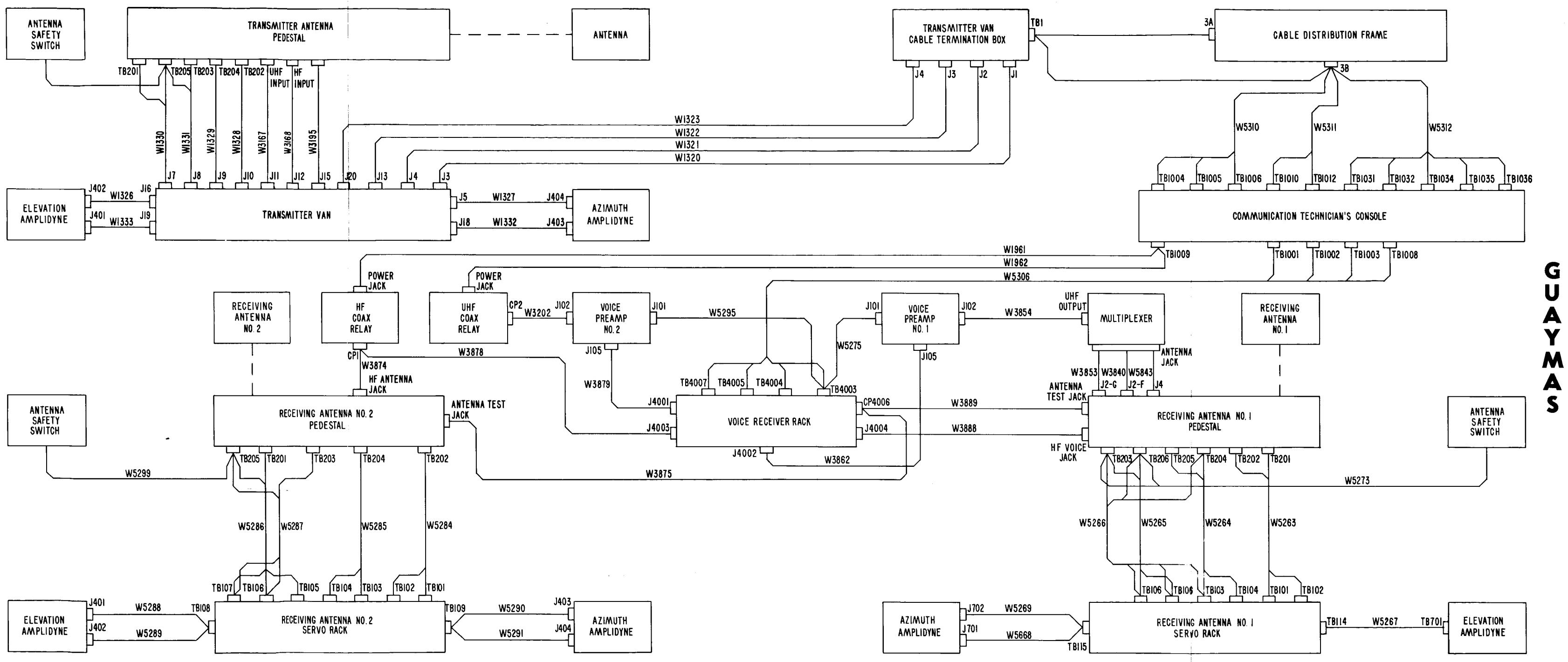

GUAYMAS

Figure 2-19. Inter-Equipment Cabling Diagram, Guaymas, Mexico

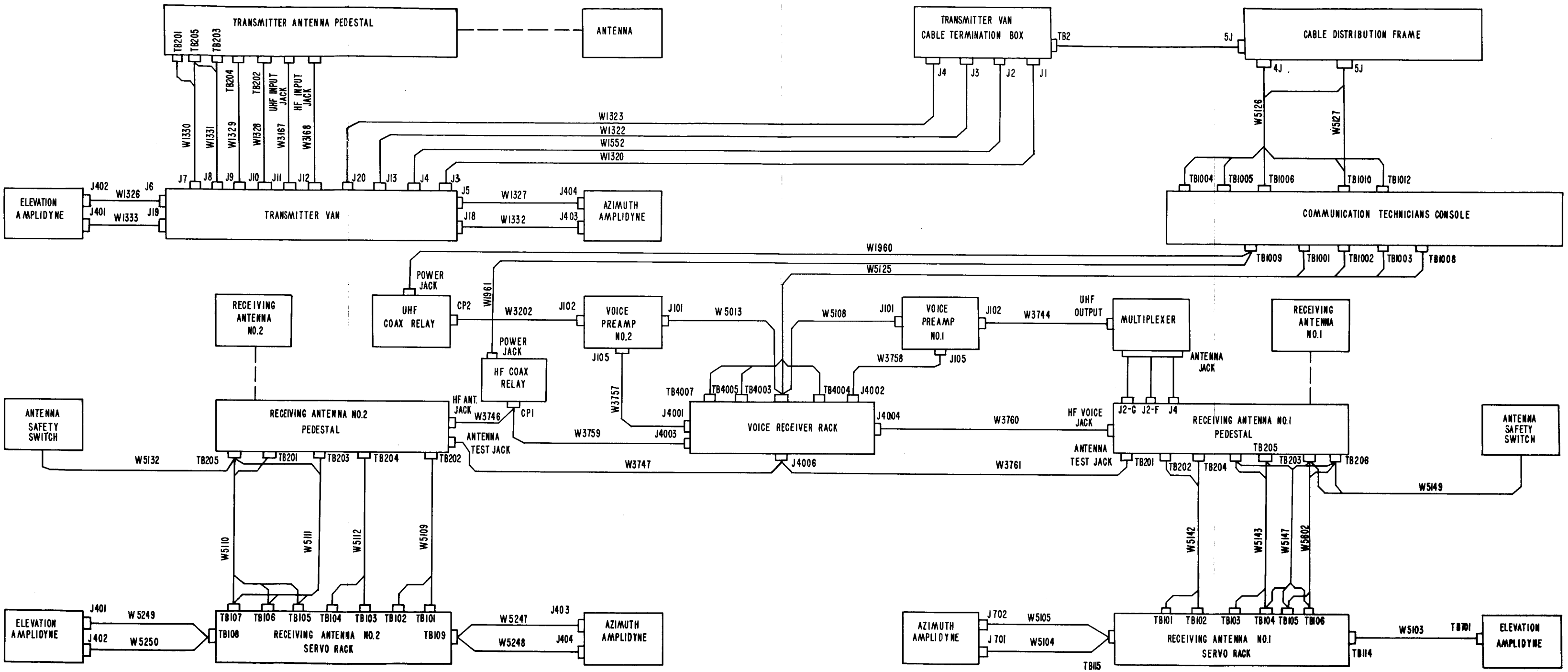

Figure 2-20. Inter-Equipment Cabling Diagram, Corpus Christi, Texas

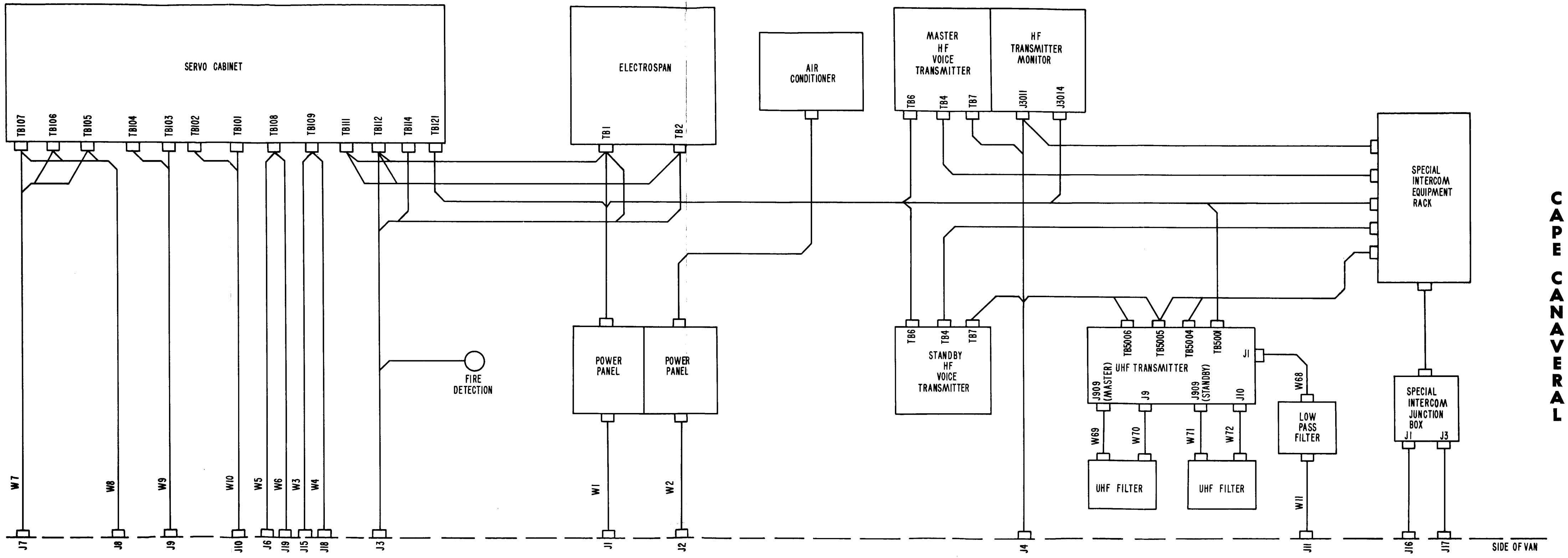

Figure 2-21. Transmitter Van Cabling Diagram, Cape Canaveral

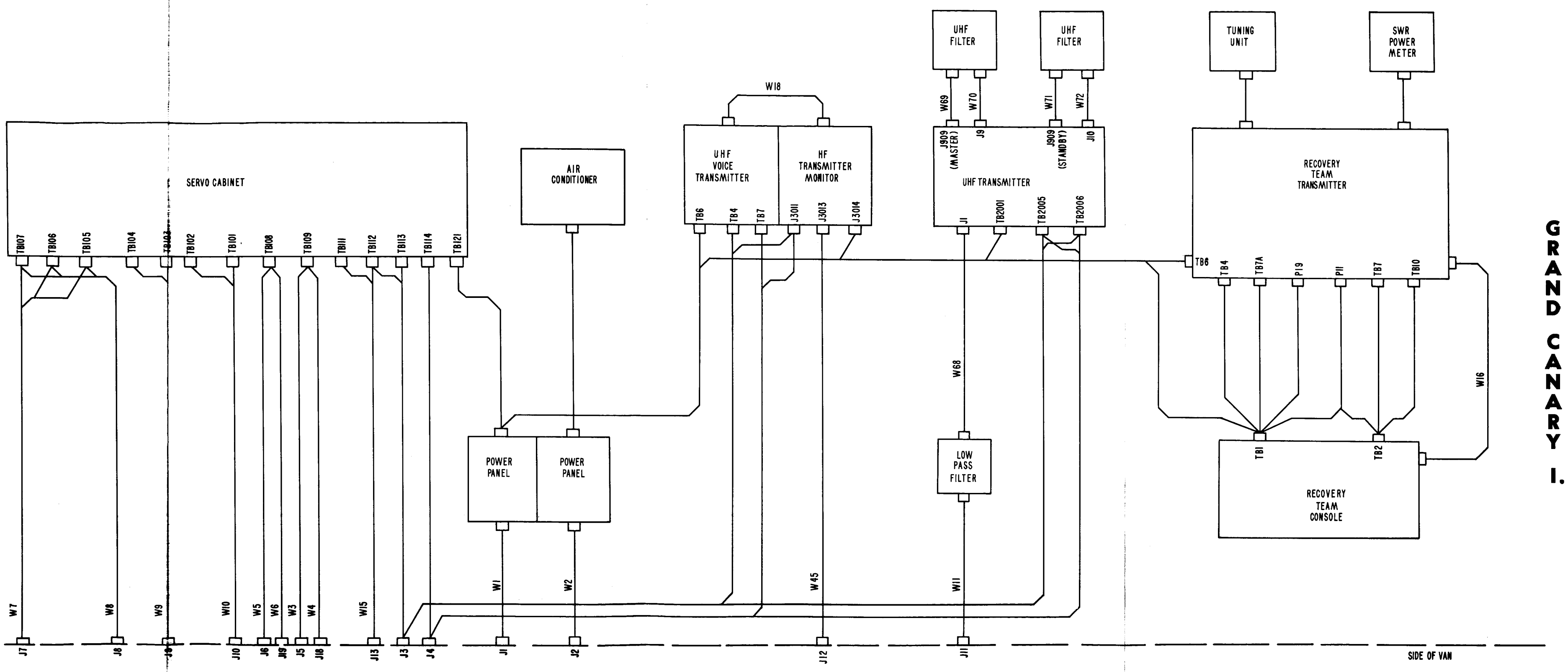

GRAND CANARY I.

Figure 2-22. Transmitter Van Cabling Diagram, Grand Canary Island

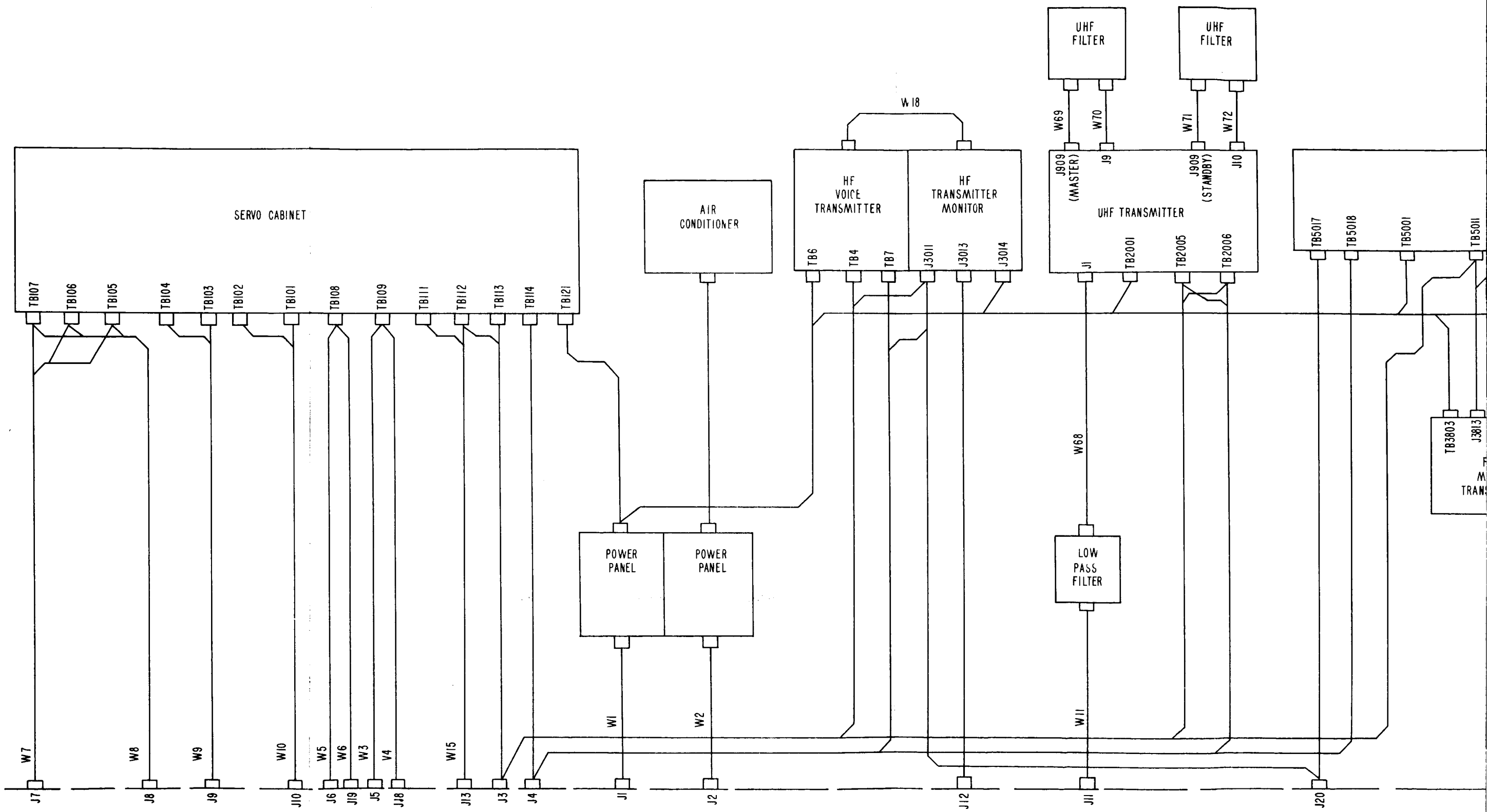
SERVO CABINET
TB107
TB106
TB105
TB104
TB103
TB102
TB101
TB108
TB109
TB111
TB112
TB113
TB114
TB121
AIR CONDITIONER
W18
HF VOICE TRANSMITTER
HF TRANSMITTER MONITOR
TB6
TB4
TB7
J3011
J3013
J3014
UHF FILTER
UHF FILTER
W69
W70
W71
W72
J909 (MASTER)
J9
J909 (STANDBY)
J10
UHF TRANSMITTER
J1
TB2001
TB2005
TB2006
TB5017
TB5018
TB5001
TB5011
TB3803
J3813
W68
POWER PANEL
POWER PANEL
LOW PASS FILTER
W1
W2
W11
W7
W8
W9
W10
W5
W6
W3
V4
W15
J7
J8
J9
J10
J6
J19
J5
J18
J13
J3
J4
J1
J2
J12
J11
J20

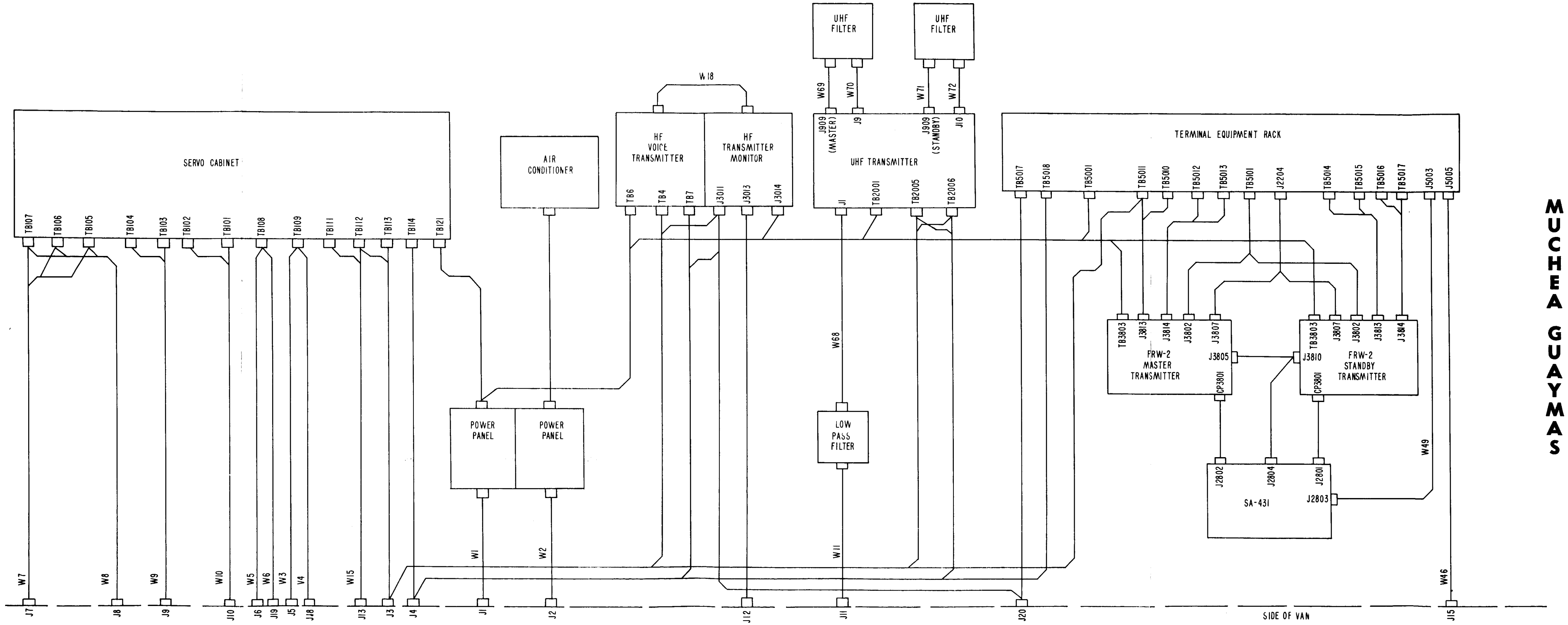

MUCHEA GUAYMAS

Figure 2-23. Transmitter Van Cabling Diagram, Muchea, Guaymas

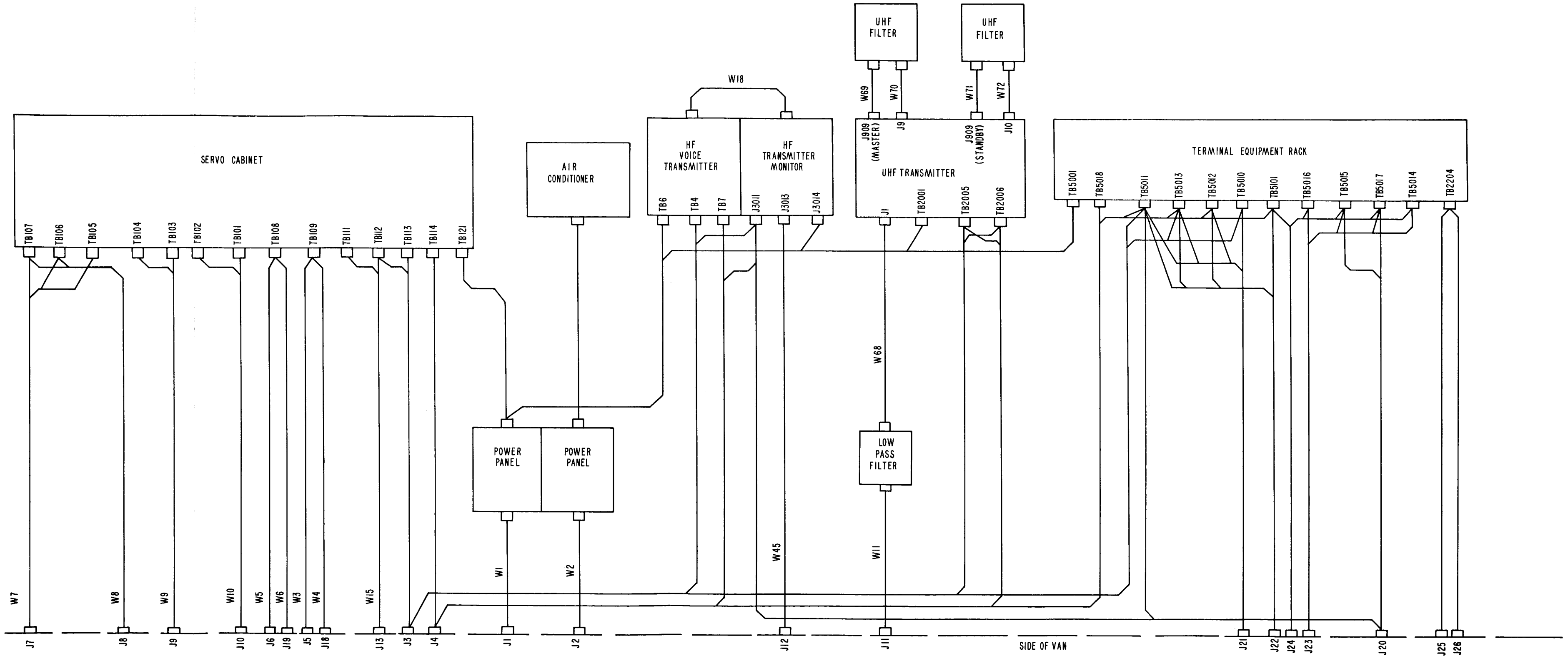

KAUAI I.

Figure 2-24. Transmitter Van Cabling Diagram, Kauai Island

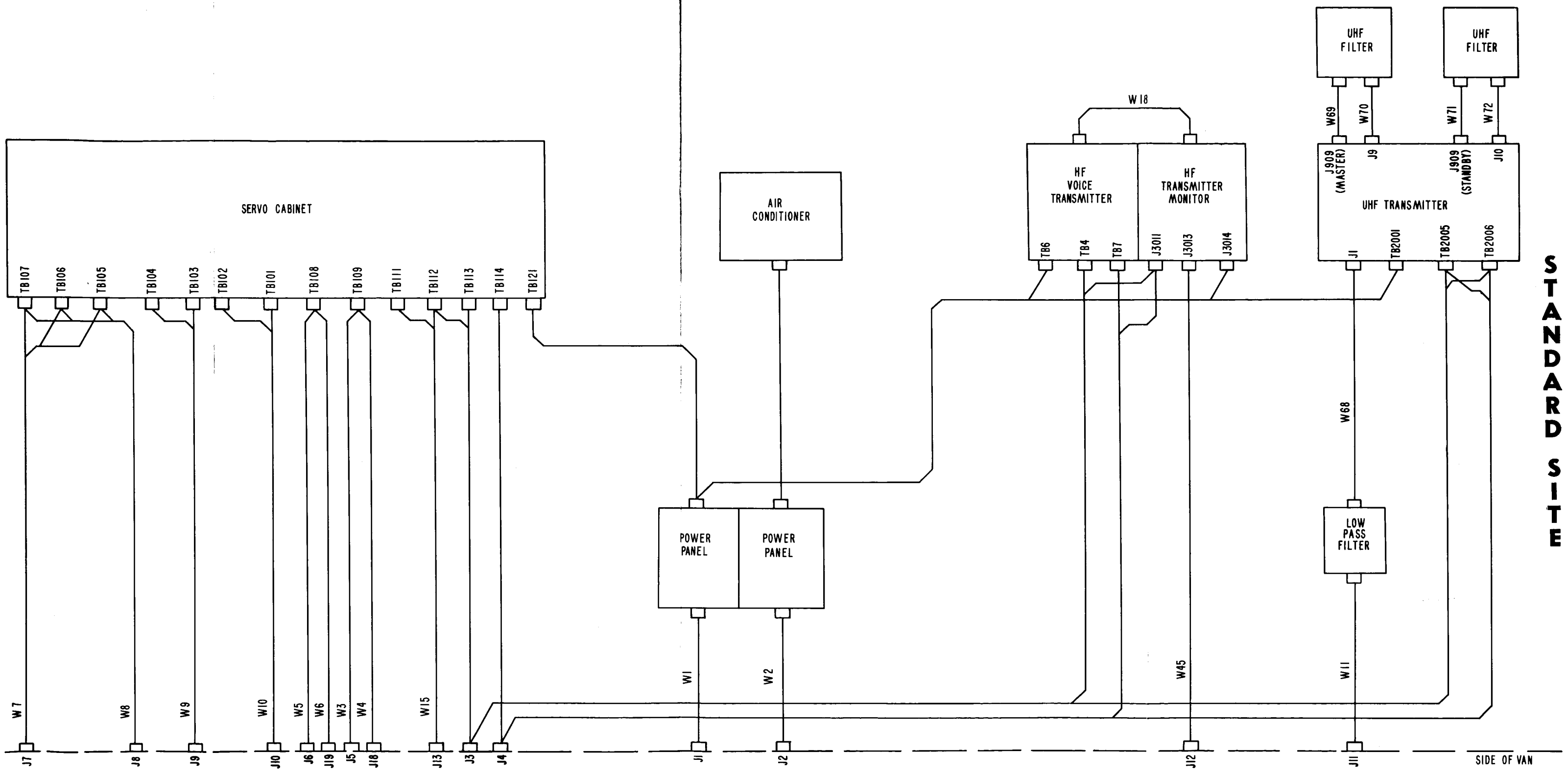

Figure 2-25. Transmitter Van Cabling Diagram, Kano, Zanzibar, Woomera, Canton, Corpus Christi

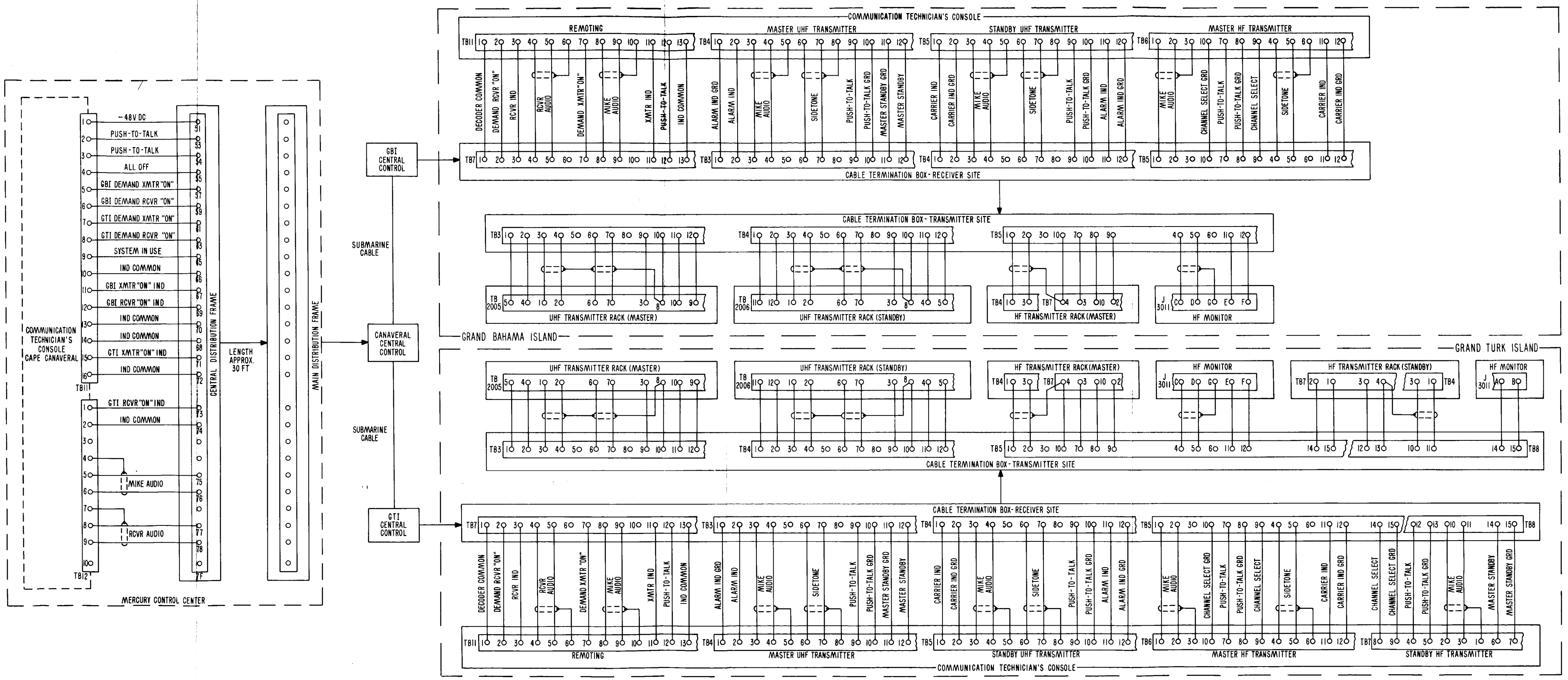

Figure 2-26. Down-Range Control System Cabling Diagram

SECTION III
SYSTEM OPERATION

3-1. GENERAL

This section contains the system operating instructions for the capsule communication system. It describes adjustments, routine turn-on procedures, and operational checks necessary for system operation. Emergency operating procedures are also covered.

3-2. INITIAL TURN-ON PROCEDURES

A. VOICE RECEIVER RACK

Place "EQUIPMENT POWER" switch in "ON" position. Its associated indicator lamp should light. Primary 115 VAC is now applied to all units within the voice receiver rack.

(1). HF/UHF SIGNAL GENERATOR. (See figure 3-1.)

(a). Place the "FIL" switch in "ON" position.

(b). Place the "150 VDC" switch in "ON" position.

(c). Align the HF and UHF sections of the signal generator to the capsule frequency, according to the instructions in the applicable manual (see table 1-II).

(d). Place the "HF-UHF-OFF" switch in "OFF" position. This position is for remote control.

(2). PREAMPLIFIER INITIAL TURN-ON PROCEDURE. (See figure 3-2.)

On each of the two preamplifier power panels (within voice receiver rack) place the "POWER" switch in "ON" position. The preamplifier unit is housed with its associated receiving antenna. (See table 1-II for applicable manual.) This unit does not need any further alignment or adjustments.

(3). UHF VOICE RECEIVER NO. 1 INITIAL TURN-ON PROCEDURE. (See figure 3-3.)

(a). On UHF voice receiver No. 1 place "POWER" switch in "ON" position. "POWER" indicator lamp will light.

(b). On the HF/UHF signal generator (figure 3-1), place "UHF-OFF-HF" switch in "UHF" position.

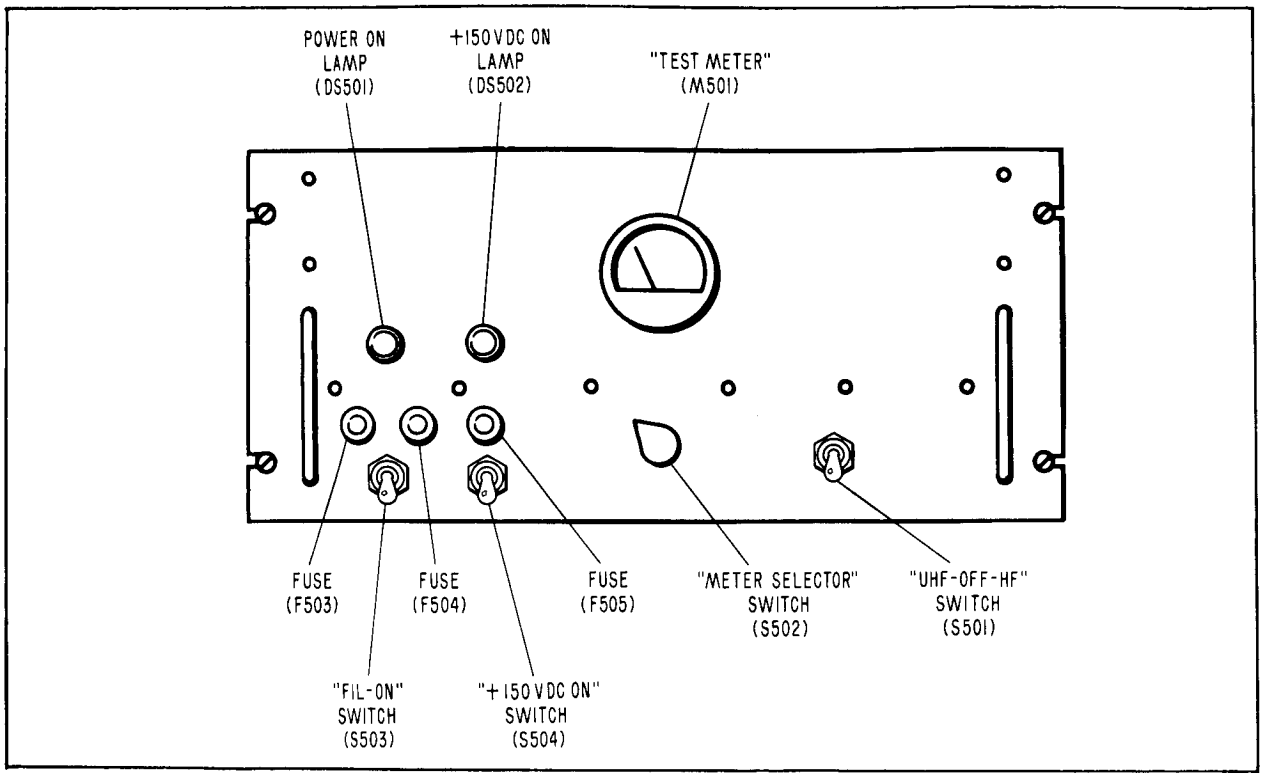

Figure 3-1. HF/UHF Signal Generator

(c). Set the front panel controls on the UHF voice receiver as follows:

Control	Position
"SQUELCH"	"ON"
"QUIETING"	Fully counterclockwise
"FREQ. RESPONSE"	"BROAD"

Control	Position
"AVC TIME CONSTANT"	"COMM"
"RF GAIN ON"	"ON"
"RF GAIN"	"MID"

(d). Loosen the two fasteners on the top front panel cover and lower this cover to expose the preset channel knurled rotary switch. Adjust the three "CHANNEL 1" knurled rotary switches for selected frequency as determined by the capsule frequency. Repeat this step for all other desired channels.

(e). Set the "CHANNEL SELECTOR" switch for the capsule frequency.

(f). On the dual speaker panel (figure 3-5) make the following adjustments:

1. Place switch S4701 in "RECEIVER 1" position ("RECEIVER 2" when adjusting Receiver 2)

2. Place switch S4703 in "UHF" position.

(g). Adjust "AF GAIN" for desired volume level. A 1020-CPS tone should be heard and "MAIN CARRIER" lamp should be lit.

(h). Adjust "RF GAIN" for low-level output.

(i). Place the "CHANNEL SELECTOR" switch in the "REMOTE" position for normal operation.

(4). UHF VOICE RECEIVER NO. 2 INITIAL TURN-ON PROCEDURE. Repeat steps (a) through (i) in paragraph 3-2.A.(3). for this receiver.

(5). HF VOICE RECEIVER NO. 1 INITIAL TURN-ON PROCEDURE. (See figure 3-4.)

(a). On the HF voice receiver place the "FUNCTION" switch in the "AGC" position.

(b). On the HF/UHF signal generator, place "UHF-OFF-HF" switch in "HF" position.

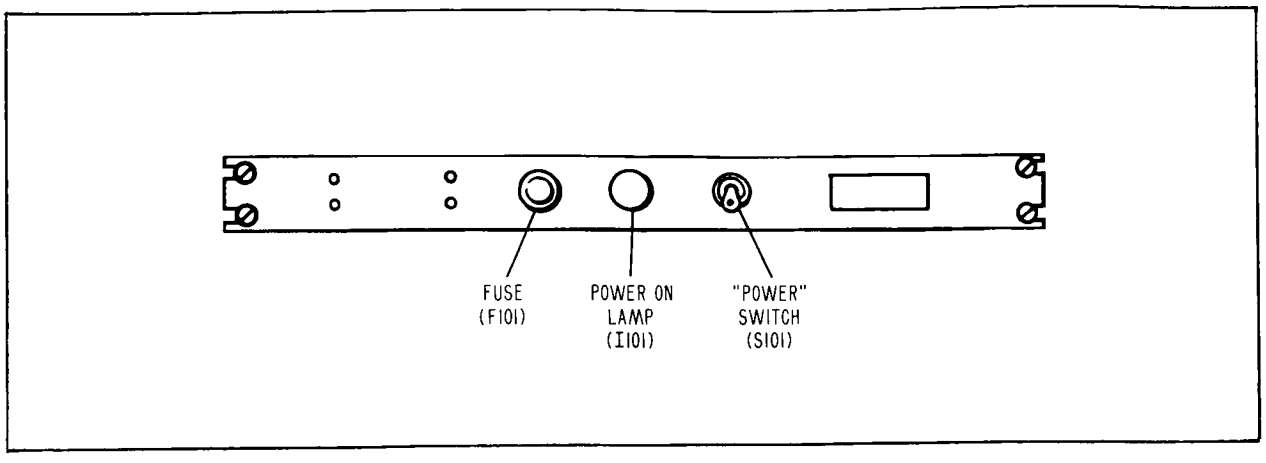

Figure 3-2. Preamplifier Power Control Panel

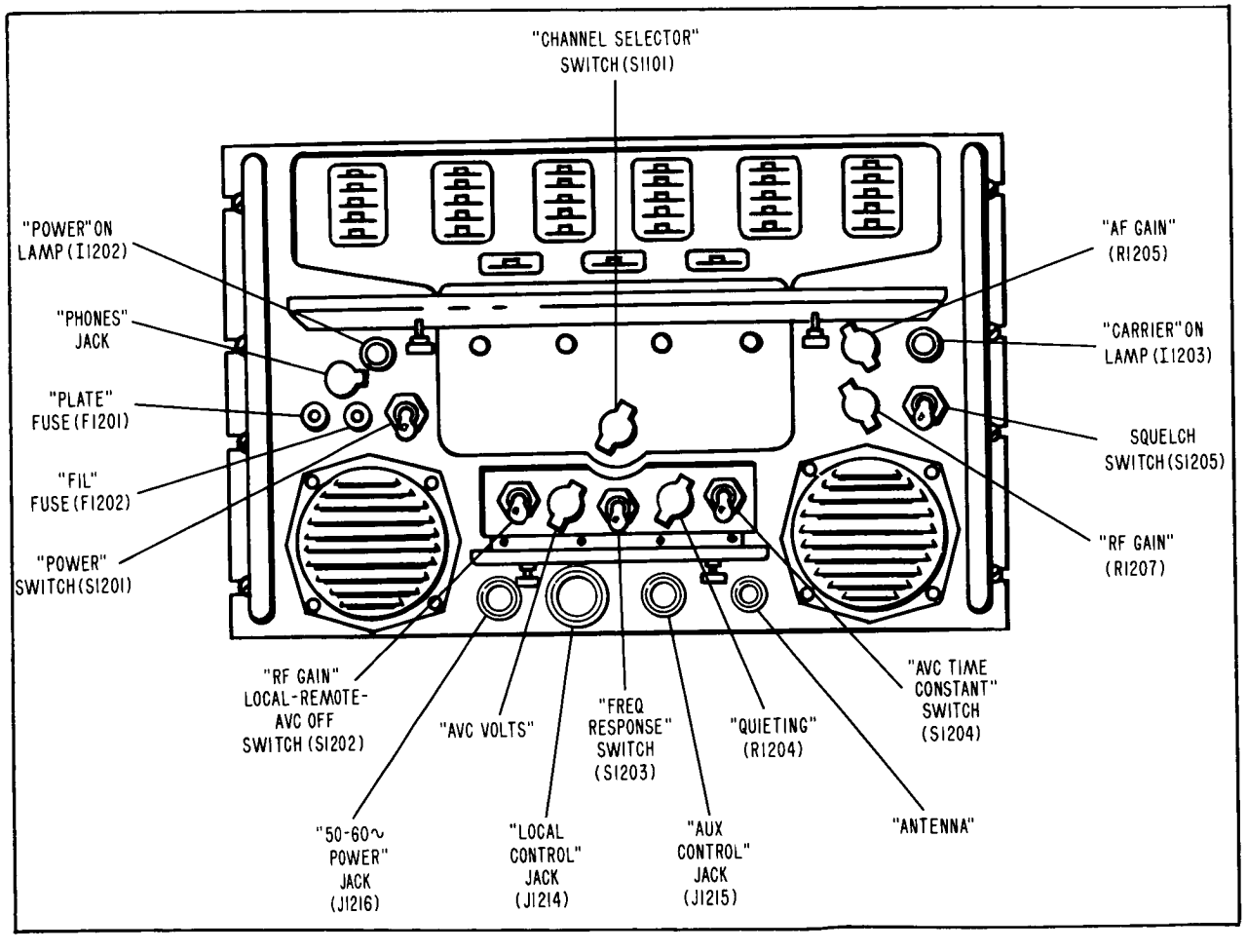

Figure 3-3. UHF Voice Receiver

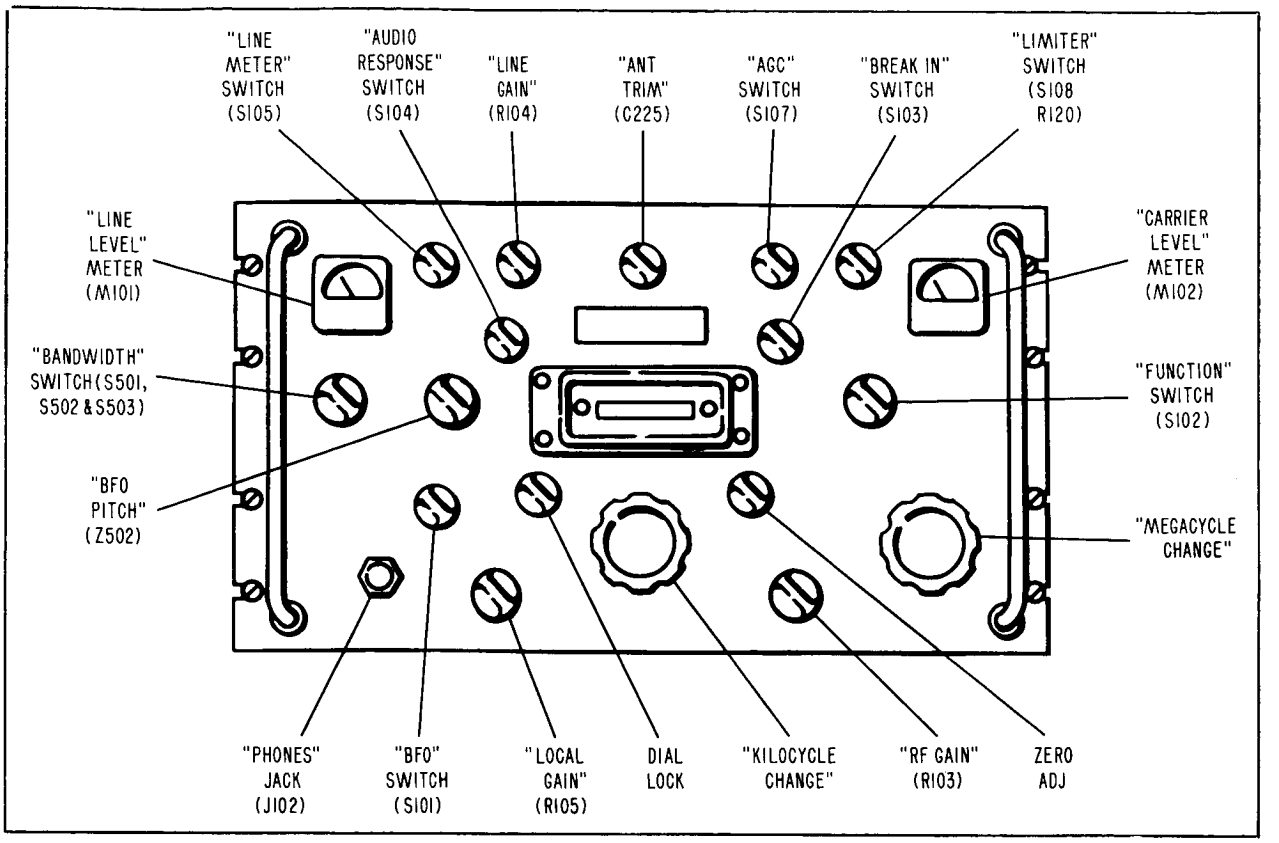

Figure 3-4. HF Voice Receiver

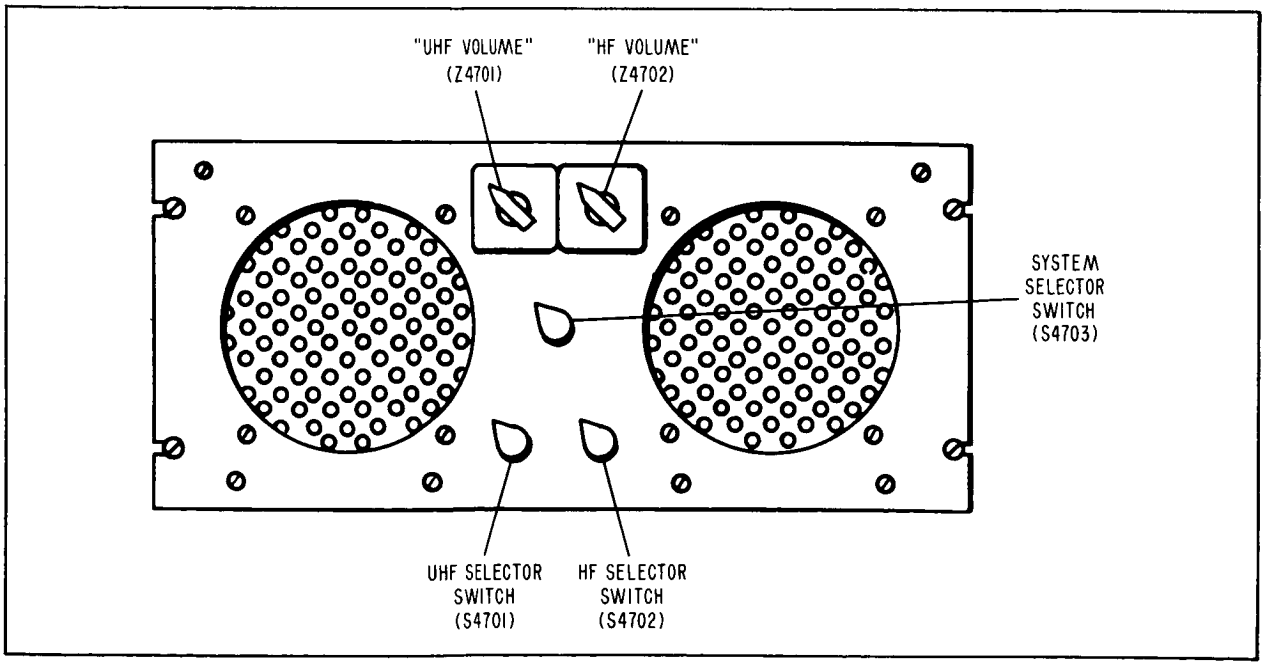

Figure 3-5. Dual Speaker Panel

(c). Set the front panel controls on the HF voice receiver as follows:

Control	Position
"BFO"	"OFF"
"LINE GAIN"	"0"
"LOCAL GAIN"	"5"
"BREAK-IN"	"ON"
"BANDWIDTH"	"8KC"
"RF GAIN"	"10"
"AUDIO RESPONSE"	"WIDE"
"AGC"	"MED"
"LIMITER"	"OFF"
"DIAL LOCK"	Fully counterclockwise
"MEGACYCLE CHANGE"	Set to capsule frequency ("CARRIER LEVEL" meter should read maximum)
"KILOCYCLE CHANGE"	Set to capsule frequency ("CARRIER LEVEL" meter should read maximum)
"DIAL LOCK"	Fully tightened

(d). On the dual speaker panel (figure 3-5) make the following adjustments.

1. Place switch S4702 in "RECEIVER 1" position ("RECEIVER 2" when adjusting Receiver No. 2)

2. Place switch S4703 in "HF" position.

(e). Readjust "LOCAL GAIN" control for desired volume level. A 1020-cycle tone will be heard.

(f). If noise is excessive, rotate "LIMITER" control clockwise as needed.

(g). If local interference is present, reset "BANDWIDTH" switch to "4KC" or "2KC" as required.

(h). Set the "LINE METER" switch to "0" position, and adjust "LINE GAIN" control for 0 VU reading (i.e., indicator at "VU" mark) on "LINE METER".

(6). HF VOICE RECEIVER NO. 2 INITIAL TURN-ON PROCEDURE. Repeat steps (a) through (h) in paragraph 3-2.A.(5).

(7). DIVERSITY COMBINER INITIAL TURN-ON PROCEDURES. (See figure 3-6.)

(a). Place the "POWER" switch in "ON" position.

(b). Place the "+300V" switch in "ON" position.

(c). Place the "CHANNEL SELECTOR" switch in "COMBINED" position. Refer to the applicable manual for detailed calibration instructions.

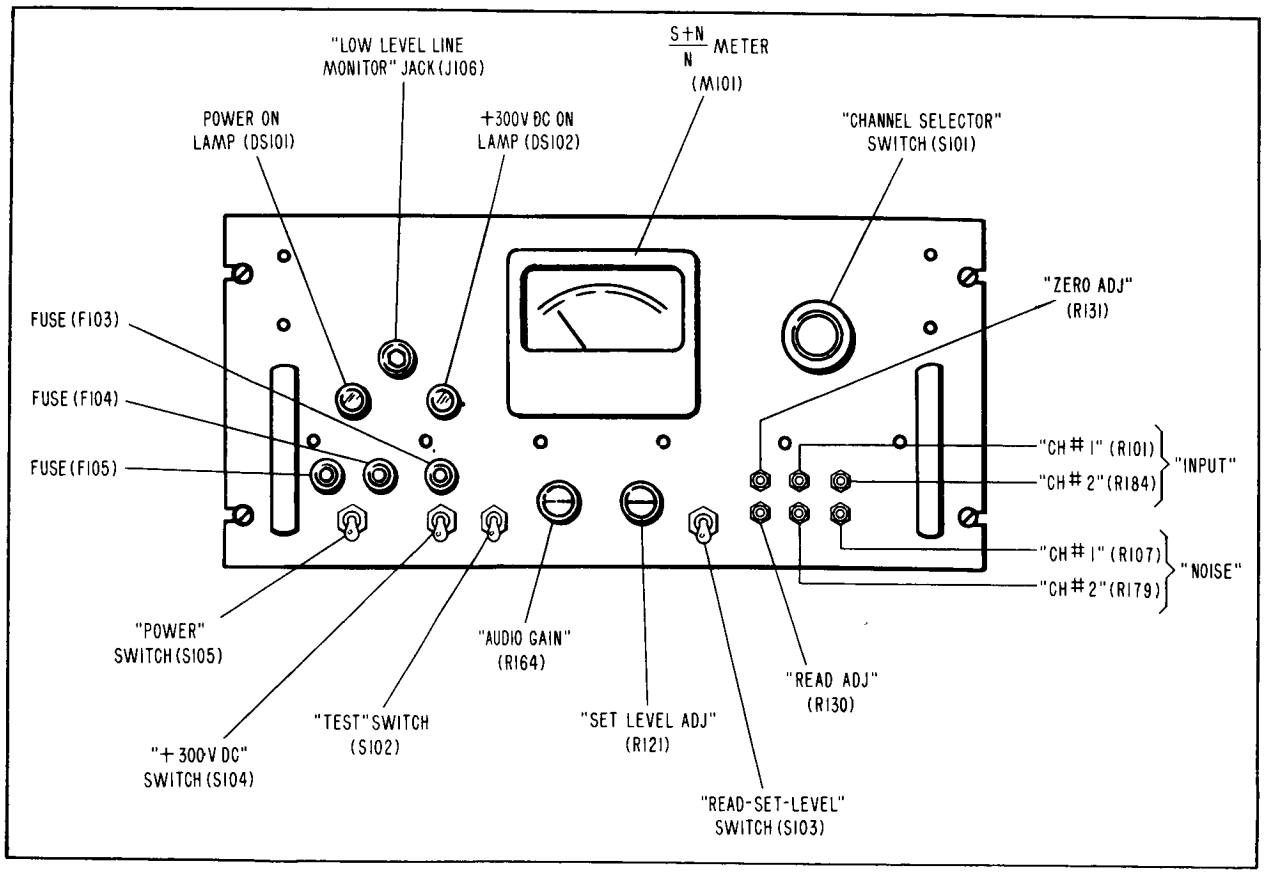

Figure 3-6. Dual Diversity Combiner

(8). DUAL-TRACK TAPE RECORDER INITIAL TURN-ON PROCEDURE. (See figure 3-7.)

(a). Prior to any front panel adjustments on the tape recorder, push "STOP" switch on "TAPE RECORDER CONTROL" panel at the communication technician's console. Press "REC" button while holding red interlock button (directly above) in. Select speed with "SLOW-OFF-FAST" switch.

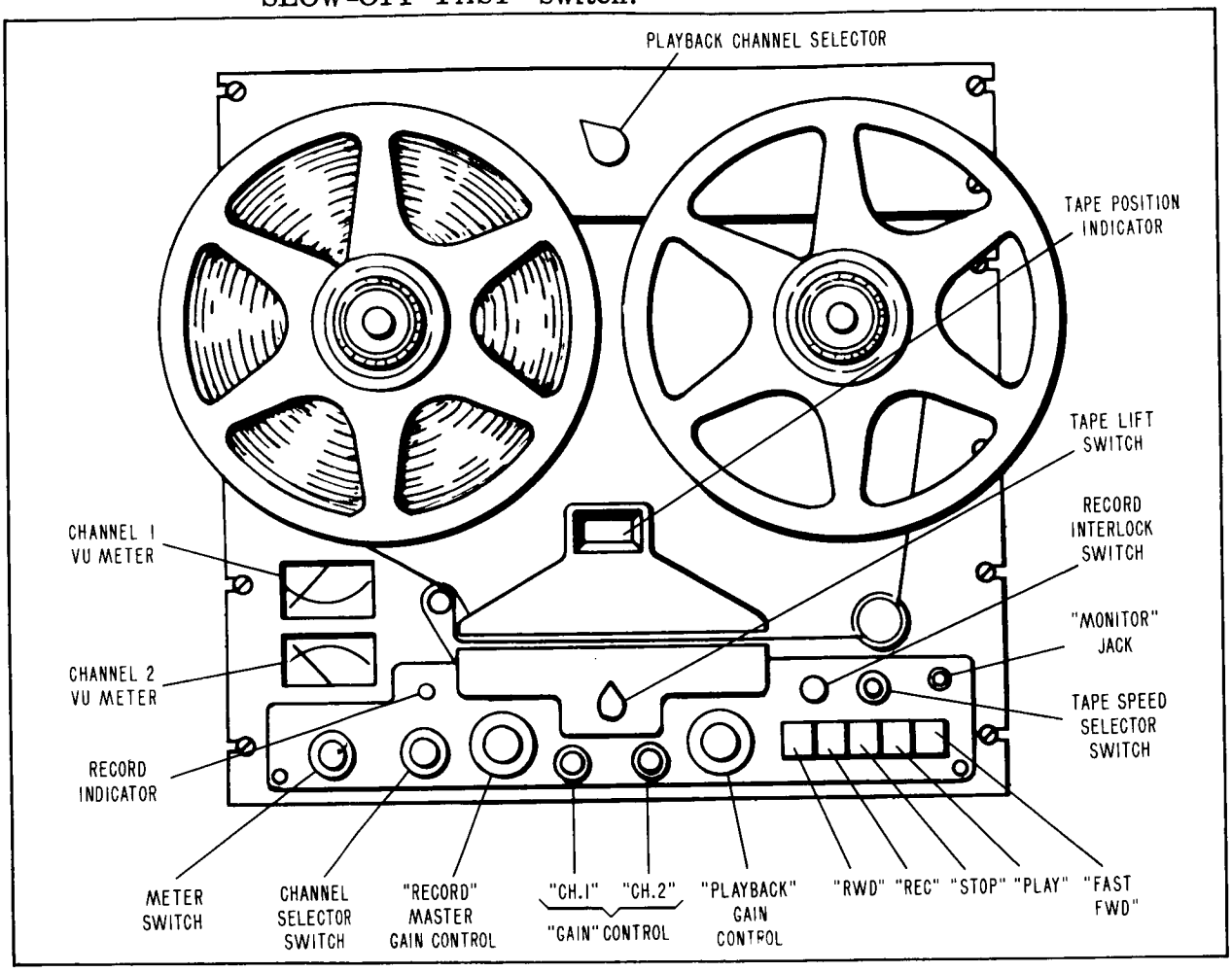

Figure 3-7. Dual Track Tape Recorder

B. UHF TRANSMITTER RACK

(1). MASTER UHF VOICE TRANSMITTER INITIAL TURN-ON PROCEDURE. (See figure 3-8.)

(a). Place power switch at the building power distribution box in "ON" position.

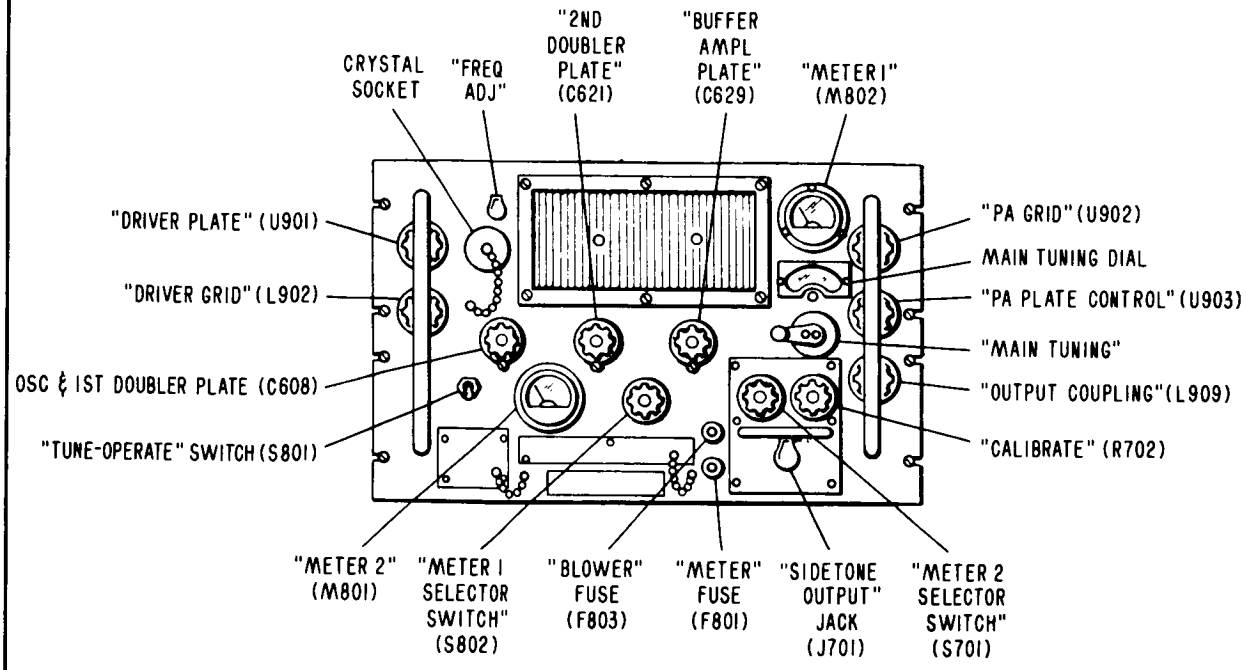

(a). Radio Transmitter T-282/GR

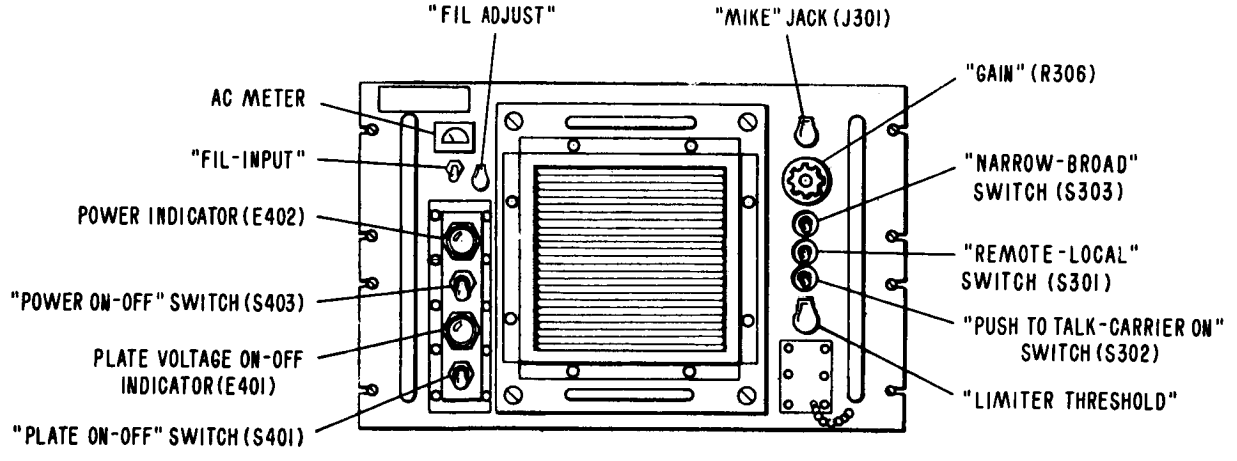

(b). Modulator-Power Supply MD-141A/GR

Figure 3-8. UHF Voice Transmitter

(b). On the transmitter-modulator power supply, place "POWER" switch in "OFF" position. Indicator lamp should light. Place "PLATE" switch in "OFF".

(c). Select the crystal frequency as follows:

$$\text{Crystal frequency} = \frac{\text{Capsule Frequency}}{36}.$$

(d). Remove original crystal and substitute the selected crystal. (Within transmitter unit.)

(e). On the transmitter-modulator power supply set the following controls to the positions indicated:

Control	Position
"POWER"	"ON" ("POWER" indicator lamp should light)
"LIMITER-THRESHOLD"	Mid position
"GAIN"	"5"
"NARROW-BROAD"	"NARROW"
"EMER-NORMAL"	"NORMAL"
"PUSH-TO-TALK-CARRIER-ON"	"CARRIER-ON"
"PLATE"	"ON"

(f). On the transmitter, set the following controls to the positions indicated:

Control	Position
"TUNE-OPERATE"	"TUNE"
"METER 1 SELECTOR"	"1"
"METER 2 SELECTOR"	"CARRIER WATTS"

1. Loosen all tuning control dial locks and allow the transmitter to warm up for five minutes.

2. Set "MAIN TUNING" dial to capsule frequency and tighten its dial lock. ("METER 1" should indicate 0.04 milliamperes.)

3. Set "METER 1 SELECTOR SWITCH" to "2". Adjust "OSC & 1ST DOUBLER PLATES" control for a maximum reading on "METER 1", and lock control.

4. Set "METER 1 SELECTOR SWITCH" to "3". Adjust "2ND DOUBLER PLATE" for a maximum reading on "METER 1", and lock control.

5. Set "METER 1 SELECTOR" switch to "4". Adjust "BUFFER AMPLR PLATE" control for a minimum reading on "METER 1".

6. Set "METER 1 SELECTOR" switch to "5". Adjust "DRIVER GRID" control for maximum reading on "METER 1".

7. Readjust "BUFFER AMPLR PLATE AND DRIVER GRID" controls for a maximum indication on "METER 1", and lock controls.

8. Set "METER 1 SELECTOR" switch to "7". Adjust "DRIVER PLATE" control for a minimum reading on "METER 1".

9. Set "METER 1 SELECTOR" switch to "6". Adjust "PA GRID" control for a maximum reading on "METER 1". Readjust "PA GRID" and "DRIVER PLATE" controls for a maximum of 0.4 milliampere indication on "METER 1". Lock both controls.

10. Adjust "PA PLATE" control for a maximum reading on "METER 2".

11. Tune the UHF cavity filter (figure 3-9) for maximum power output and minimum transmitter VSWR as follows:

a. Remove the access cover from the cavity filter taking care not to lose the o-ring gasket.

b. Using the spanner wrench supplied, loosen the locking ring-nut slightly so that the tuning screw can be turned.

The ring-nut must remain tight enough that the tuning nut does not turn freely.

c. Set meter 2 selector switch S702 to "CARRIER WATTS". While the transmitter is being keyed, tune the cavity filter until the meter reads maximum.

d. Set meter 2 selector switch to VSWR. Tune the cavity filter clockwise until the meter shows the VSWR to be approximately 1.9.

e. Tighten the locking ring nut with the spanner wrench. The VSWR should drop to approximately 1.4.

f. Replace the cavity filter access cover, being sure to replace the o-ring gasket. When the cover is fully tightened, the VSWR should drop to 1.0.

12. Set "METER 1" selector switch to "8". Set "TUNE-OPERATE" switch to "OPERATE". Adjust "PA PLATE" for a maximum reading on "METER 2". Set "OUTPUT COUPLING" control fully clockwise unless 100 watts output cannot be obtained. In this case, readjust "OUTPUT COUPLING" and "PA PLATE" controls until 100 watts is obtained.

13. Normal "METER 1" indication should be between 0.50 and 0.62 milliamperes.

14. Place "PUSH-TO-TALK-CARRIER-ON" switch in "PUSH-TO-TALK" position. Insert microphone into "MIKE JACK".

15. Set "METER 2 SELECTOR" switch to "% MOD". Speak into microphone and adjust "GAIN" control for 85 to 95 per cent modulation, as indicated on bottom scale of "METER 2".

16. Remove microphone connection from "MIKE JACK", and place "PUSH-TO-TALK-CARRIER-ON" switch in "CARRIER-ON" position.

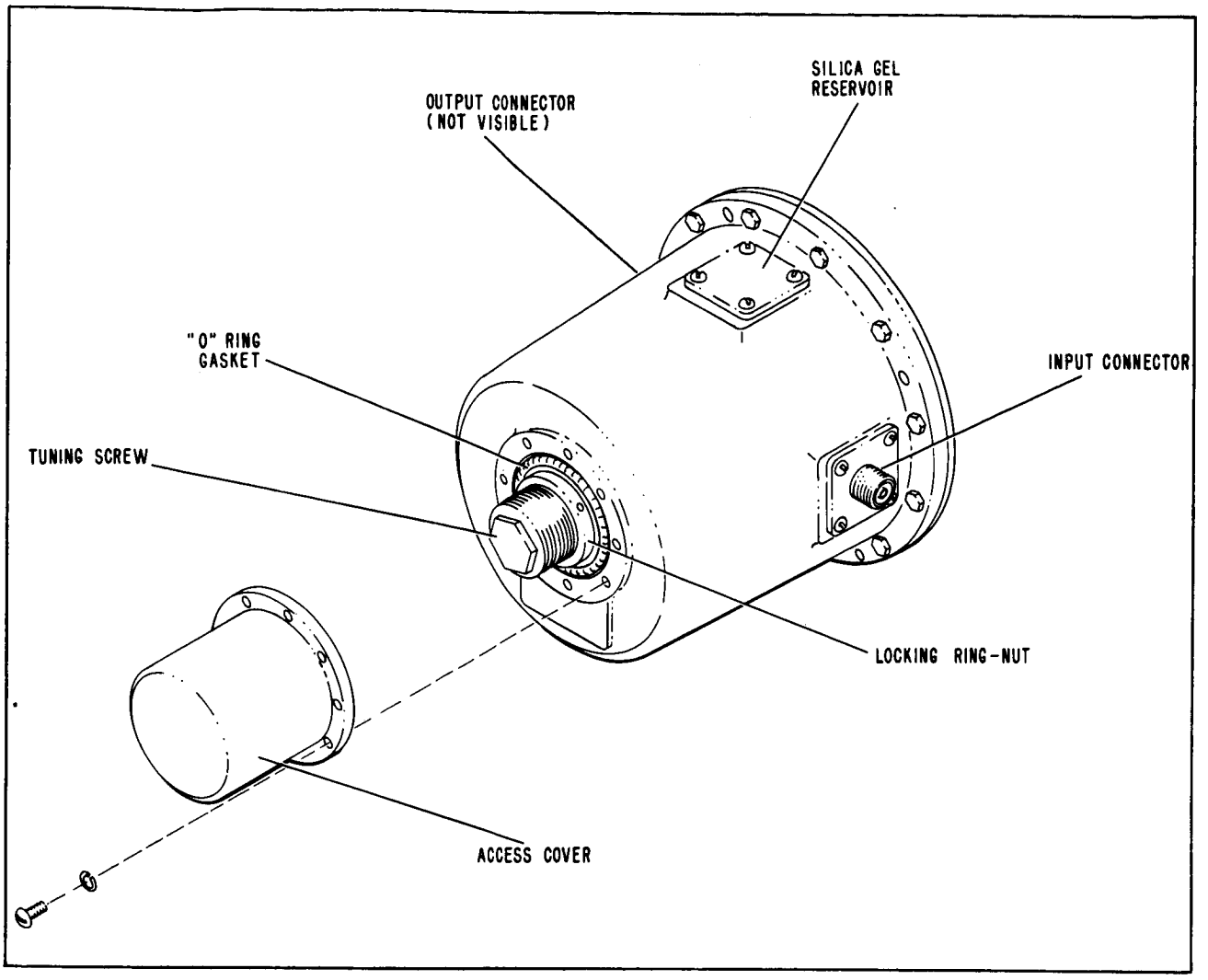

Figure 3-9. UHF Cavity Filter

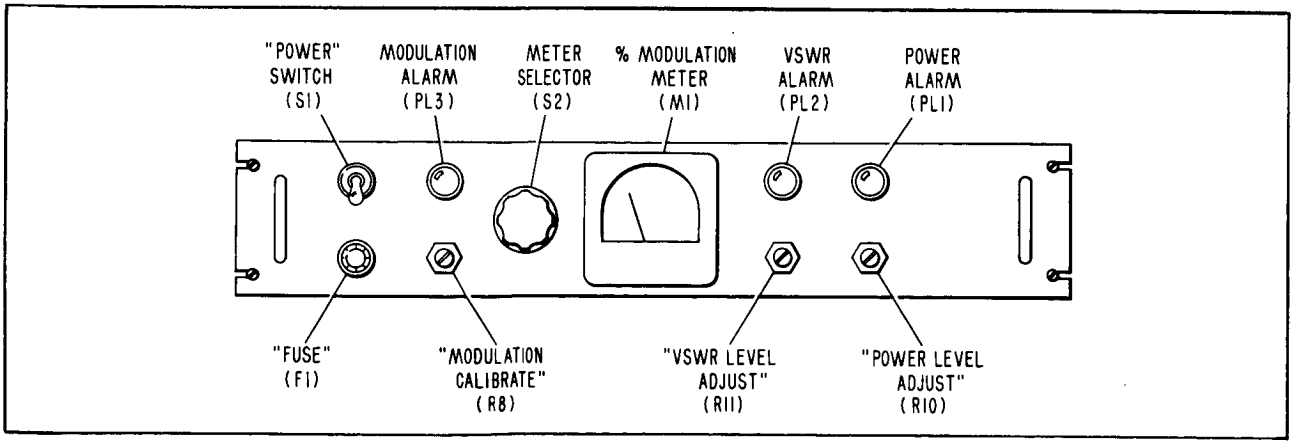

Figure 3-10. Power Modulation Monitor

(2). STANDBY UHF VOICE TRANSMITTER INITIAL TURN-ON PROCEDURE.

Repeat steps (b) through (f) in paragraph 3-2.B.(1). for the standby transmitter.

(3). POWER MODULATION MONITOR INITIAL TURN-ON PROCEDURE. (See figure 3-10.)

Place the "POWER" switch in the "ON" position. Refer to the applicable instruction book listed in table 1-II for calibration and adjustment of this unit.

C. HF VOICE TRANSMITTER. (See figure 3-11.)

(1). The initial turn-on procedure for the Gates HF voice transmitter is given in section III of the instruction manual for Gates Transmitter Model CS-2029 (Modified), ME-139.

(2). Routine transmitter operation consists of depressing channel 1 or channel 2 selector keys, holding down the microphone press-to-talk (PTT) switch, and speaking into the microphone. As long as the transmitter meter indications agree with the normal readings shown in the Table of Typical Meter Readings (Table 3-I), it is only required to use the procedure as outlined above to operate the transmitter.

TABLE 3-I. TYPICAL METER READINGS

Meter Position	Normal Reading
TEST METER-OSC PLATE I	20 ma
IPA GRID I	3-3.5 ma
IPA PLATE I	40-50 ma
PA GRID I	30 ma
PA SCREEN I	40-55 ma
PA PLATE CURRENT	250 ma
MOD PLATE CURRENT	65 ma (zero modulation)
	250 ma (peak voice modulation)
PA PLATE VOLTAGE	1500 volts

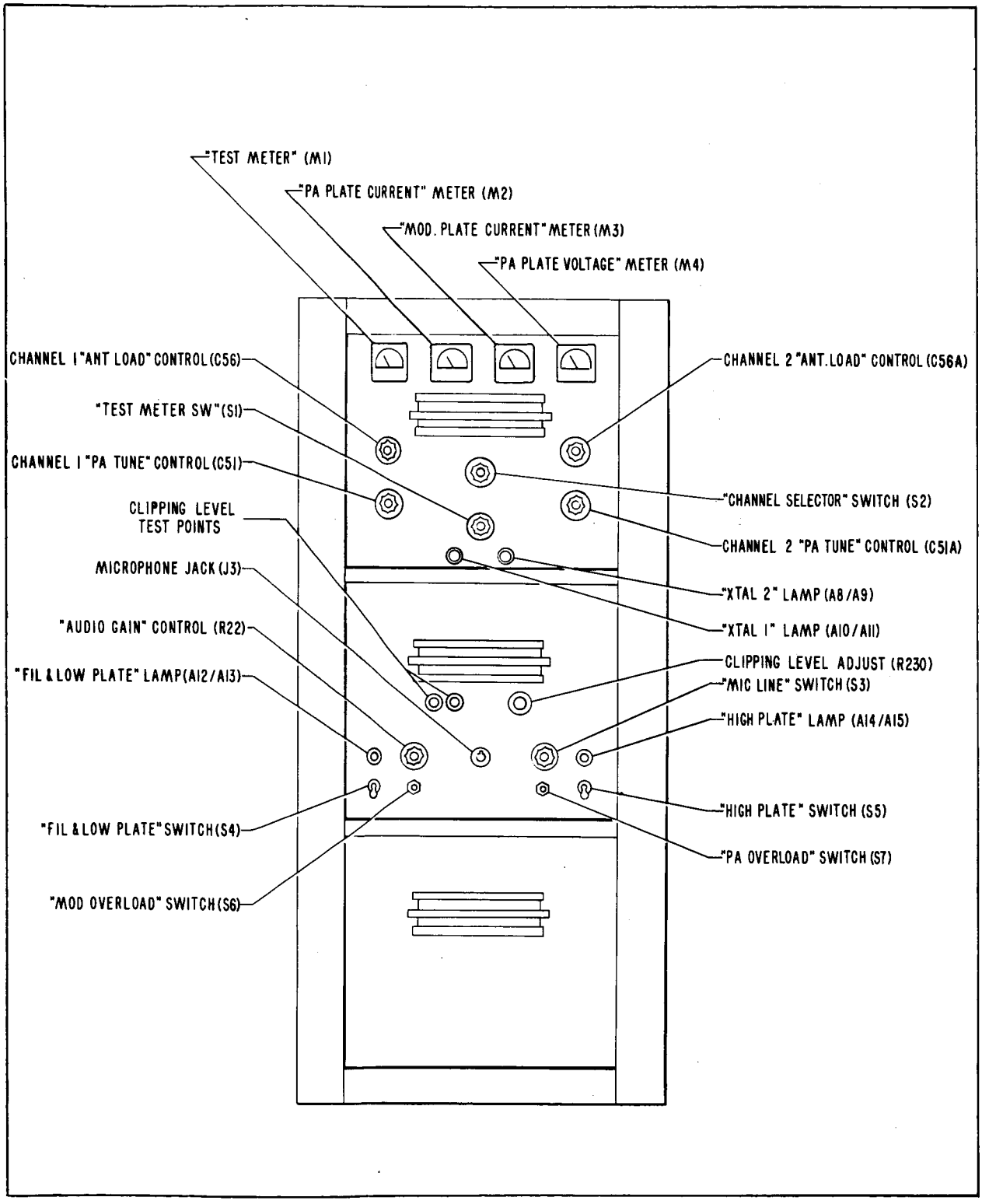

Figure 3-11. HF Voice Transmitter Operating Controls

D. COMMUNICATION TECHNICIAN'S CONSOLE

(1). AC POWER

Set circuit breaker CB1001 on the power panel (figure 3-13) to "ON".

(2). +65 VDC POWER SUPPLY (Applicable Only at Cape Canaveral, GBI, Bermuda, and Point Arguello)

At the rear of the communication technician's console, in the same rack containing the power panel, place the on-off switch of the +65 VDC power supply in the "ON" position.

(3). DUAL POWER SUPPLY

(a). 28 VDC POWER SUPPLY #1

On the auxiliary control panel (figure 3-22) push '#1 ON" switch. The light on the switch should light indicating +28 VDC is applied to the console. The '#2 OFF" lamp should be lit.

(b). 28 VDC POWER SUPPLY #2

On the "POWER CONTROLS"panel push '#2 ON" switch. The '#2 OFF" lamp should go out and the lamp on '#2 ON" switch should light.

(c). Adjust the output voltage of both power supplies as described in paragraph 5-13.

(4). HF VOICE TRANSMITTER MICROPHONE AMPLIFIER INITIAL TURN-ON PROCEDURE (See figure 3-14.)

Remove the front cover plate to expose the controls of the HF voice transmitter microphone amplifier. Place the "POWER" switch in "ON". For detailed calibration and adjustment, refer to the applicable instruction book listed in table 1-II. Replace front cover on the console.

(5). LINE AMPLIFIER INITIAL TURN-ON PROCEDURE. (See figure 3-15.)

Remove the front panels to uncover the controls of the microphone and side tone amplifiers located below the writing surface of the console (see figure 1-14.) The audio line amplifier has two major capabilities. The first is to accept an input signal of -35 dbm to 0 dbm and maintain either a 0-dbm or -10-dbm output (utilizing a 10-db attenuator pad). The second capability is to accept an input signal of -25 dbm to 0 dbm and maintain a +10-dbm or 0-dbm output (with 10-db attenuator pad). The range of input and output requirements must therefore be known prior to alignment since each capability has a separate alignment procedure. Refer to the applicable instruction book for the alignment procedures. After the alignment, leave the "POWER" switch in the "ON" position and the "ATTN" switch in the appropriate position. Replace the front panel covering the line amplifier.

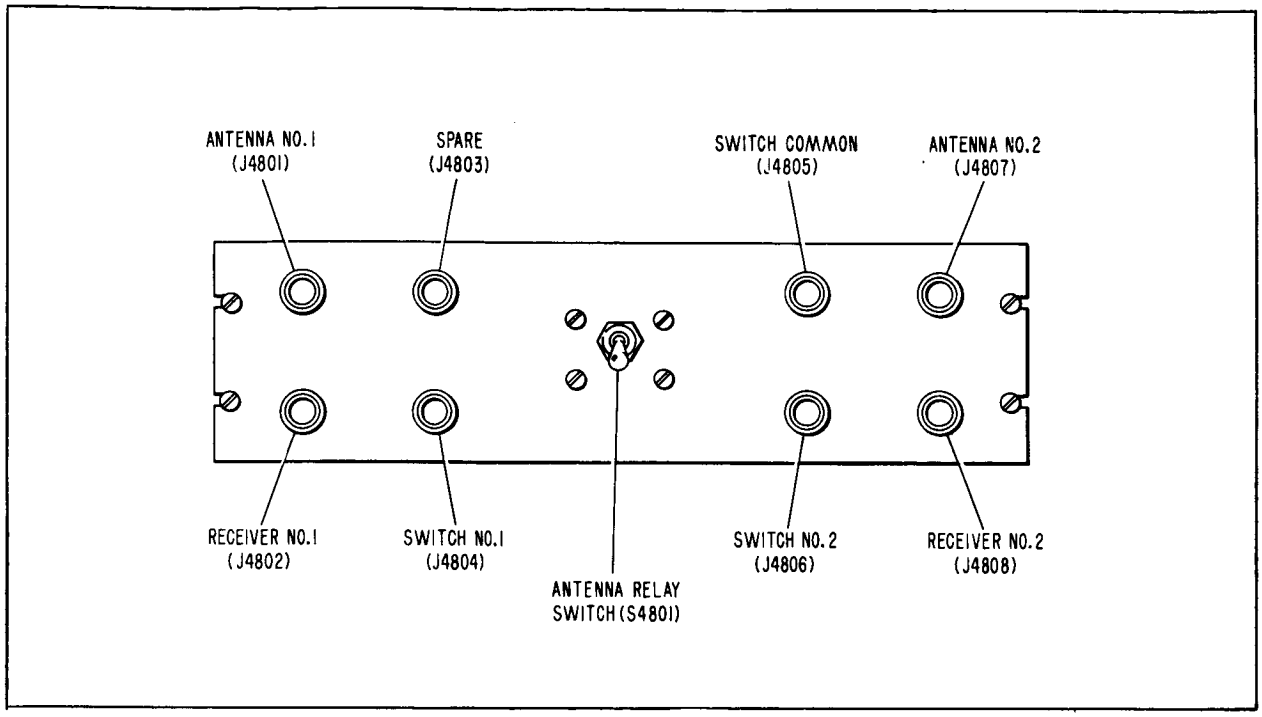

Figure 3-12. Antenna Switching Panel, Voice Receiver Rack

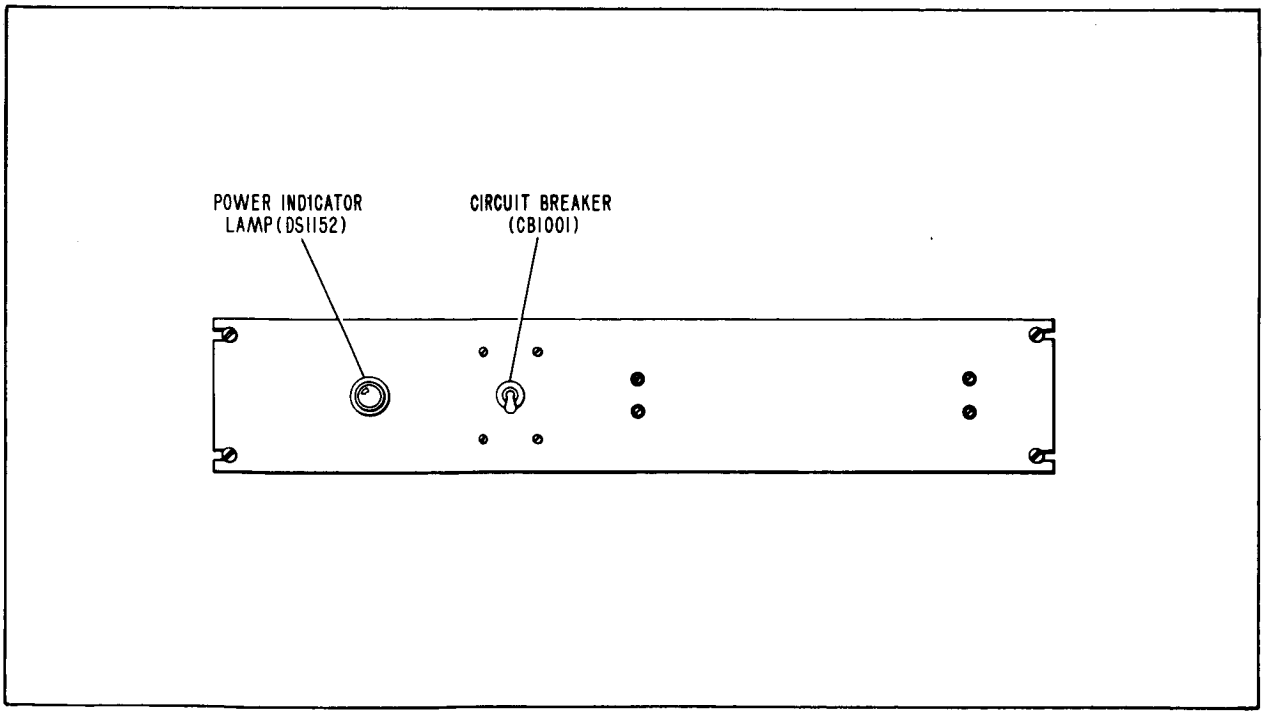

Figure 3-13. Communication Technician's Console, Rear Panel Power Controls

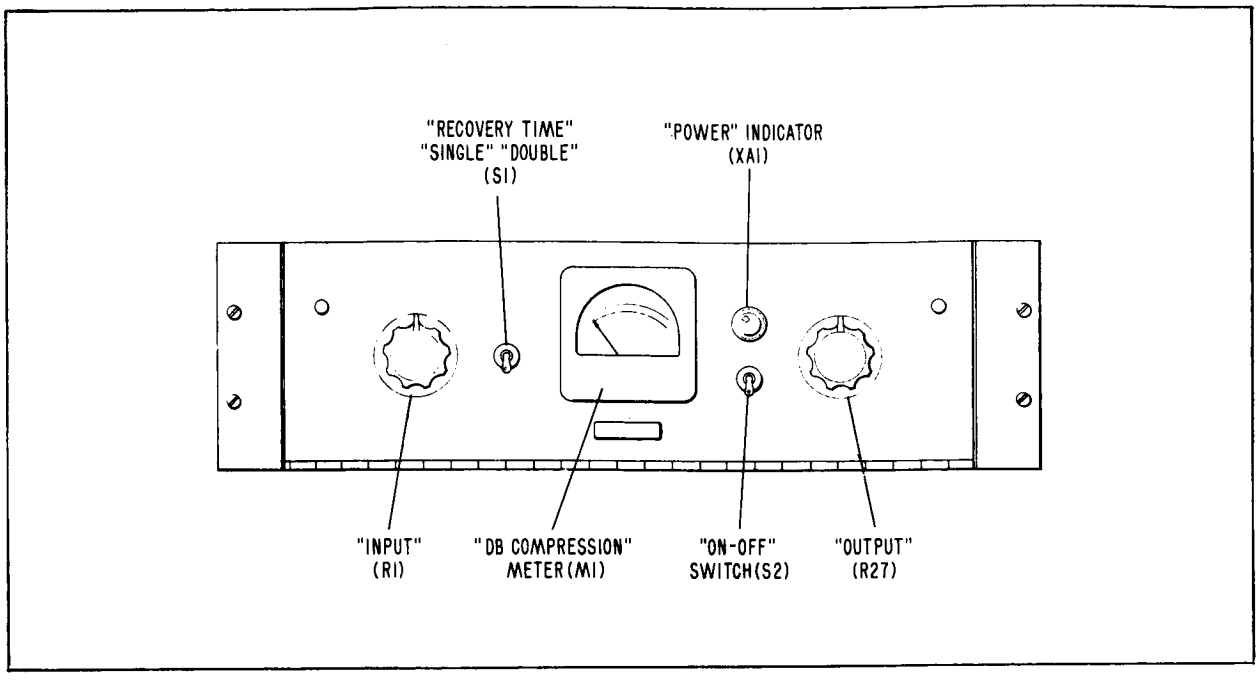

Figure 3-14. HF Voice Transmitter Microphone Amplifier

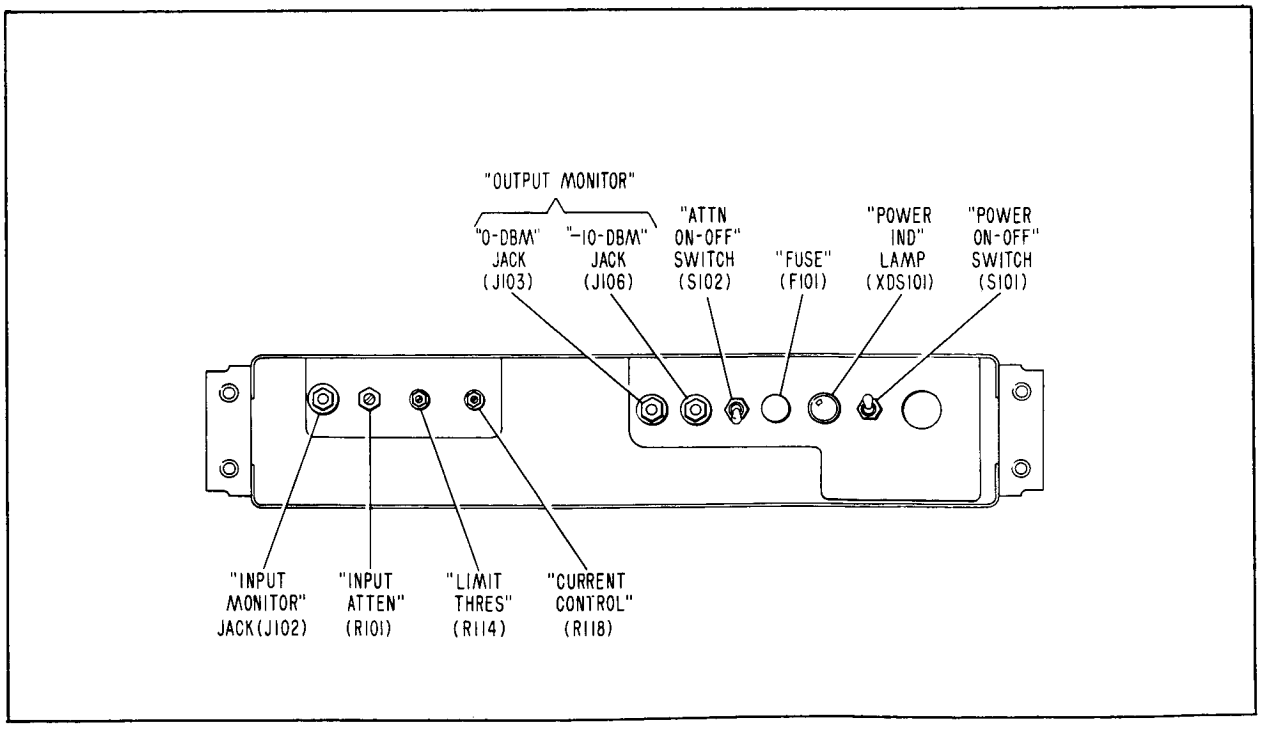

Figure 3-15. Audio Line Amplifier

(6). AUDIO CODE OSCILLATOR INITIAL TURN-ON PROCEDURE (See figure 3-32.)

Set "POWER" switch in "ON" position. "POWER IND" lamp should light.

(7). AUDIO ADJUSTMENTS AND 65-VOLT INDICATOR ADJUSTMENTS

At all sites, perform the audio adjustments that are described in paragraphs 5-9 through 5-12, and at Cape Canaveral, Grand Bahama Island, Bermuda, and Point Arguello, perform the 65-volt indicator adjustments that are described in paragraphs 5-9, 5-11, and 5-12.

E. HF MONITOR RACK

(1). RACK POWER

Set "POWER" switch S3002 to "ON". The associated indicator lamp should light.

(2). POWER MODULATION MONITOR INITIAL TURN-ON PROCEDURE (See figure 3-10.)

Place the "POWER" switch in "ON" position. Refer to the applicable instruction book for calibration and adjustment of this unit.

(3). HF VOICE TRANSMITTER SIDETONE AUDIO LINE AMPLIFIER INITIAL TURN-ON PROCEDURE. (See figure 3-15.)

Remove the front panel to uncover the controls of the line amplifier. Refer to paragraph 3-2. D. (4). and the applicable instruction book for turn-on and alignment procedures.

F. SERVO AMPLIFIER RACK

(1). ACTIVATING THE EQUIPMENT

(a). Set "SERVO AMPLIFIER POWER" and "SERVO AMPLIFIER REFERENCE" switches (figure 3-16) to "ON".

(b). Set "FIELD POWER" switch (figure 3-17) to "ON". Allow sufficient time for the equipment to warm up.

(c). Turn the "REMOTE REF/LOCAL REF" switch, located above the right-hand terminal strips inside the servo rack, to "REMOTE".

(d). Set "ANTENNA SERVO" switch (figure 3-17) to "RUN".

(d). Place the "AZIMUTH" and "ELEVATION" switches (figure 3-14B) in "REMOTE" position for an instant to allow follow-up of synchros. Then return both switches to "LOCAL" position.

(f). Set the "AZIMUTH AMPLIDYNE" and "ELEVATION AMPLIDYNE" circuit breakers (figure 3-17 to "ON". Refer to the

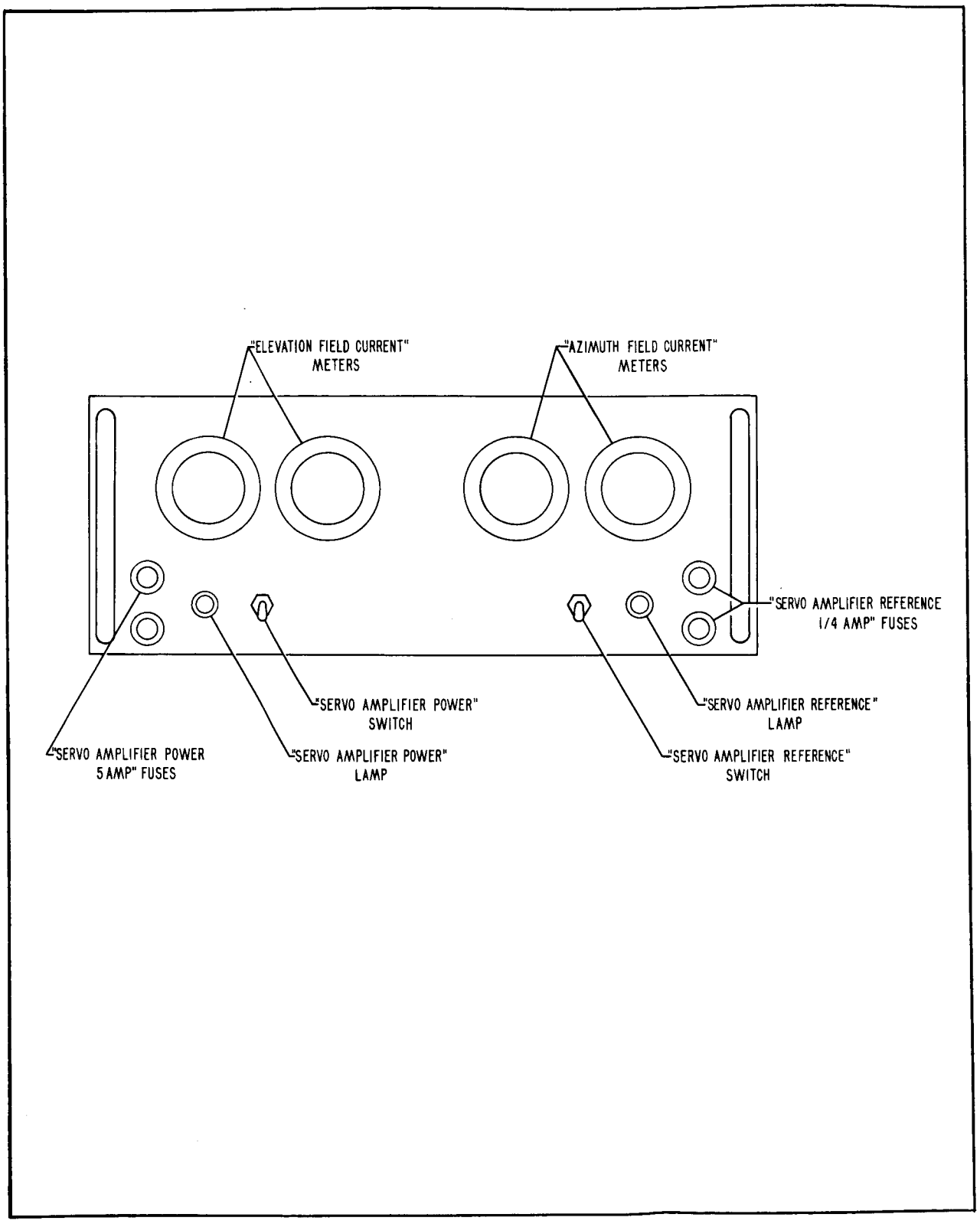

Figure 3-16. Servo Amplifier

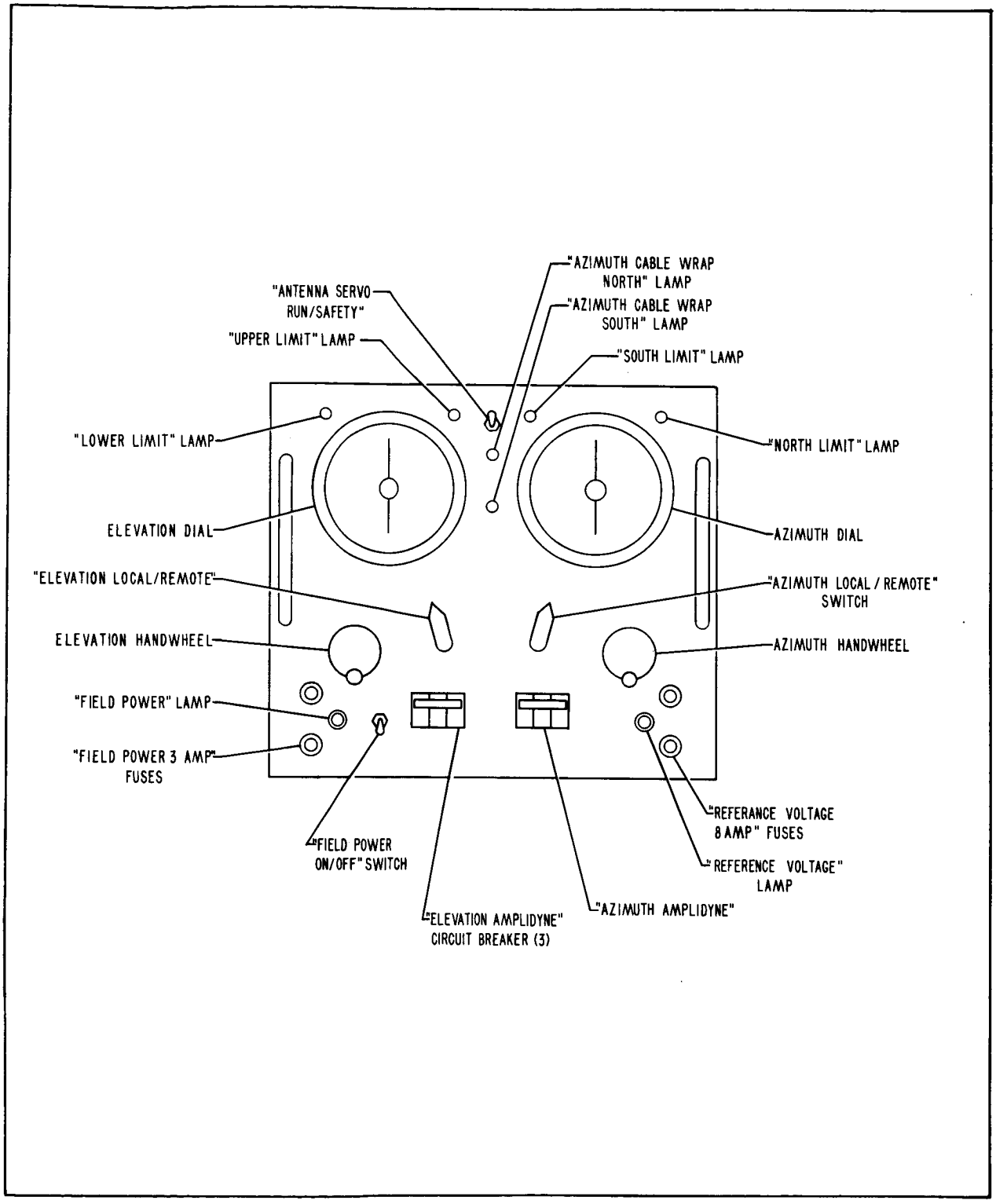

Figure 3-17. Control Indicator

applicable instruction book for alignment and abnormal operation procedures.

(2). PRE-OPERATIONAL CHECKS. (See figure 3-17.)

(a). With all equipment powered and in local mode, observe that "FIELD POWER" and "REFERENCE VOLTAGE" lamps are lit.

(b). Rotate elevation handwheel to -10 degrees on elevation dial and check for illumination of "LOWER LIMIT" lamp.

(c). Rotate elevation handwheel to +100 degrees on elevation dial and check for illumination of "UPPER LIMIT" lamp. Return antenna assembly to 0 degree using the elevation handwheel.

(d). Rotate azimuth handwheel clockwise slowly until "NORTH LIMIT" lamp is illuminated. Note that the dial pointer has passed the "NORTH LIMIT" mark on the dial.

(e). Slowly rotate the azimuth handwheel counterclockwise. Note that the "NORTH LIMIT" lamp goes out at the beginning of counterclockwise rotation, but the "NORTH AZIMUTH CABLE WRAP" lamp remains illuminated.

(f). Continue clockwise rotation of azimuth handwheel. Note that the "NORTH AZIMUTH CABLE WRAP" lamp is extinguished and the "SOUTH AZIMUTH CABLE WRAP" lamp illuminates and stays on as the 270 degree mark is passed in counterclockwise rotation.

(g). Continue counterclockwise rotation of azimuth handwheel. Note that the "SOUTH LIMIT" lamp illuminates at the limit of counterclockwise travel and the dial pointer has passed the "SOUTH LIMIT" mark on the dial.

CAUTION

Do not turn azimuth or elevation handwheel past point of limit stop because a false null of synchros will be reached causing antenna to attempt to whip 180 degrees. This will damage synchros and drive motors and will force antenna against limit stop.

(h). Check to see that the "ELEVATION FIELD CURRENT" meters and "AZIMUTH FIELD CURRENT" meters (figure 3-16) have similar readings, indicating the absence of any error voltage in the system.

(i). Check to see that the "SERVO AMPLIFIER POWER" lamp and "SERVO AMPLIFIER REFERENCE" lamp (figure 3-16) are illuminated.

G. RECOVERY TEAM COMMUNICATION EQUIPMENT.

(1). RACK POWER.

Set circuit breaker switch CB1 to "ON". The associated indicator lamp should light.

(2). HF VOICE RECEIVER INITIAL TURN-ON PROCEDURE. (See figure 3-4.)

(a). Set "FUNCTION" switch to "STANDBY". The dial lamps should light. For detailed calibration and adjustment, refer to the applicable instruction book.

(b). On the HF voice receiver, set "FUNCTION" switch to "AGC" and rotate "LINE GAIN" control to position "5". On the audio amplifier and speaker (figure 3-35), set "AMPLIFIER" switch S2 to "ON" and set "SPEAKER" switch S1 to "ON". With the HF voice receiver tuned to an incoming signal, adjust "MONITOR VOLUME" control R1 on the patch and control panel (figure 3-34) for the desired listening level.

(3). RECOVERY TEAM COMMUNICATION TRANSMITTER INITIAL TURN-ON PROCEDURE.

(a). On the HF voice receiver, set "BREAK IN" switch (figure 3-4) to "ON".

(b). On the patch and control panel (figure 3-34), set "TRANSMITTER SELECTOR" switch to "CW" and set "RECEIVE-SEND" switch to "SEND".

(c). On the SWR and power meter (Tenna-Matcher BE-165/G), set selector switch in the "POWER" position to serve as a dummy load for the transmitter while tuning. (See figure 3-36.)

(d). Tune the transmitter as described in steps (1) through (27) of paragraph 3-2.C. Step (25) should be omitted if only one channel of the recovery team transmitter is being tuned.

Note

For operation below 3 megacycles, the shorting strap between the P.A. plate tank coil assembly L21 and L21A on the RF deck must be disconnected. The RF deck cover has been cut so that the rear section can be readily removed. Therefore, the change can be performed without disturbing the top cover.

(e). On the audio keying oscillator (figure 3-33), set "POWER" switch S1 to "ON". The "POWER IND" lamp should light. The audio keying oscillator is keyed when the transmitter is keyed. Therefore, with the transmitter keyed, adjust "SIDETONE OUTPUT ADJ" control R17 (figure 3-33) for the desired listening level from the speaker on the audio amplifier (figure 3-5). It should not be necessary to readjust "MONITOR VOLUME" control on the patch and control panel from the setting attained in paragraph 3-2.G.(2).(b).

(f). On the patch and control panel, set "TRANSMITTER SELECTOR" switch to "MCW". Audio from the audio keying oscillator is applied to the modulator unit of the transmitter when the telegraph key is depressed. Connect a VTVM (Hewlett-Packard, Vacuum Tube Voltmeter, Model 400D/H/L or equivalent) between terminals 1 and 3 of terminal board TB4 on the rear of the transmitter. Adjust "OUTPUT ADJ" control R6 (figure 3-33) to 0.25 VAC as indicated by the VTVM.

(g). On the patch and control panel, set "TRANSMITTER SELECTOR" switch to "AM". On the microphone preamplifier (figure 3-14), set power switch S2 to "ON". The associated "POWER" indicator lamp should light. Reconnect the VTVM between terminals 1 and 3 of terminal board TB4 on the rear of the transmitter. With "INPUT" control R1 on the microphone preamplifier rotated fully

clockwise to obtain maximum gain and compression, talk into the microphone and adjust "OUTPUT" control R27 for 0.25 VAC as indicated by the VTVM. It is necessary to hold the microphone close to the mouth in order to achieve maximum audio compression. Adjust "AUDIO GAIN" control on front panel of the transmitter for 12 db of clipping at 100 per cent modulation in accordance with the applicable instruction book.

(h). Sidetone output for the MCW and AM modes of transmission is obtained from the directional coupler and fed to the audio amplifier and speaker panel. This sidetone signal is adjusted by rotating potentiometer R2 on the rear of the patch and control panel. Pull the panel forward to gain access, and then adjust potentiometer R2 for the same listening level as that which was attained in paragraph 3-2.G.(2).(b).

Note

If the sidetone level adjustments are correctly made, the same loudspeaker level should be obtained when switching between "RECEIVE" and "SEND-AM", "SEND-CW" or "SEND-MCW" switch positions. The loudspeaker level is then adjusted to the desired listening level with only one control (" MONITOR VOLUME" control R1) during normal operation.

(i). After the transmitter has been tuned up into the dummy load, set selector switch on the SWR and power meter (figure 3-36) to "ADJUST" and quickly rotate "ADJUST" control for a full scale meter reading. Set the selector switch to "SWR" and adjust the "COUPLING" and "LOADING" controls on the RF tuner (Antenna Tuner TN-339/GR) for minimum SWR indication. (See figure 3-37.) Set the selector switch to "OPERATE". The transmitter is now tuned and radiating.

CAUTION

Never set the tuner band selector switch on the RF tuner to the "LONG WIRE" position when operating the transmitter. An open circuit condition is presented which can cause damage to the RF tuner and subsequently to the transmitter.

(j). An air-gap lightning arrestor, located at the antenna base, is provided for protection of the recovery team equipment during electrical storms. The air-gap should be adjusted to provide minimum spacing consistent with maximum lightning protection without arc-over during transmitter operation. An air-gap of 1/32 inch may prove to be practical. However, it should be remembered that the air-gap spacing used will be dependent upon transmitter loading, transmitter frequency, and site environmental factors.

3-3. NORMAL TURN-ON PROCEDURE

The normal turn-on procedure is shown in table 3-II. The normal turn-on procedure is routine after the initial turn-on procedures described in paragraph 3-2 have been accomplished.

3-4. SYSTEM OPERATIONAL CHECKS

A. UHF RECEIVING SYSTEM

Perform the following operations at the communication technician's console:

(1). At the "RCVR SYS SELECTOR" panel, press the "UHF RCVR" switch. (See figure 3-18.)

(2). At the "UHF RCVR CONTROLS" panel, press the "RCVR 1" switch. (See figure 3-22.)

(3). Select the capsule frequency channel with the "UHF RCVR CHAN SEL" switch. (See figure 3-18.)

TABLE 3-II. NORMAL TURN-ON PROCEDURE

Major Assembly	Unit	Control	Control Position	Indication	Remarks
Voice Receiver Rack	Rack	"EQUIPMENT POWER" switch	"ON"	Associated lamp lights.	
	UHF Voice Receiver No. 1	"FUNCTION" switch	"ON"	"POWER" indicator lamp lights.	
	HF Voice Receiver No. 1	"FUNCTION" switch	"AGC"	-	
	Diversity Combiner	"POWER" switch	"ON"	Associated lamp lights.	
		"+300V"	"ON"	Associated lamp lights.	
		"CHANNEL SELECTOR" switch	"COMBINED"	Associated lamp lights.	
	Preamplifier Power Panel	"POWER" switch	"ON"	Associated lamp lights.	
	Tape Recorder	"SPEED SELECTOR" switch	"FAST" or "SLOW"	-	
	HF/UHF Signal Generator	"POWER" switch	"ON"	-	
		"+150V PLATE" switch	"ON"	-	
		"UHF-HF-OFF" switch	"ON"	-	
	UHF Voice Receiver No. 2	"POWER" switch	"ON"	"POWER" indicator lamp lights.	
	HF Voice Receiver No. 2	"FUNCTION" switch	"AGC"	-	
	HF Voice Receiver	"POWER" switch	"ON"	"POWER" indicator lamp lights.	
	Band Pass Filter (Ships Only)	"OPERATE" switch	"ON"	"OPERATE" indicator lamp lights.	

TABLE 3-II. NORMAL TURN-ON PROCEDURE (Cont.)

Major Assembly	Unit	Control	Control Position	Indication	Remarks
Communication Technician's Console	Console	"POWER" switch	"ON"		
	+28 VDC Power Supply #1	"#1 ON" switch	Push	Switch lights.	Electrically locked
	+28 VDC Power Supply #2	"#2 ON" switch	Push	Switch lights.	Electrically locked
	Audio Code Oscillator	"POWER" switch	"ON"	Associated lamp lights.	
UHF Transmitter Rack	UHF Voice Transmitter No. 1	"POWER" switch	"ON"	Associated lamp lights.	
		"PLATE" switch	"ON"	Associated lamp lights.	
	Power Modulation Monitor	"POWER" switch	"ON"	Associated lamp lights.	
	UHF Voice Transmitter No. 2	"POWER" switch	"ON"	Associated lamp lights.	
		"PLATE" switch	"ON"	Associated lamp lights.	
Master HF Voice Transmitter		"FIL & LOW PLATE" switch	"ON"	Associated lamp lights.	Up position
		"HIGH PLATE" switch	"ON"	Associated lamp lights.	Up position
HF Monitor Rack	Rack	"POWER" switch	"ON"	Associated lamp lights.	
Servo Amplifier Rack	Control-Indicator	"FIELD POWER" switch	"ON"	Associated lamp lights.	
		"AZIMUTH" switch	"REMOTE"		
		"ELEVATION" switch	"REMOTE"		

TABLE 3-II. NORMAL TURN-ON PROCEDURE (Cont.)

Major Assembly	Unit	Control	Control Position	Indication	Remarks
	Servo Amplifier	"SERVO AMPLIFIER REFERENCE" switch	"ON"	Associated lamp lights.	
		"SERVO AMPLIFIER POWER" switch	"ON"	Associated lamp lights.	
	Control-Indicator	"AZIMUTH AMPLIDYNE" circuit breaker	"ON"		
		"ELEVATION AMPLI-DYNE" circuit breaker	"ON"		
		"ANTENNA SERVO" switch	"RUN"		
Recovery Team Equipment	Rack	Circuit breaker	"ON"	Associated lamp lights.	
	HF Voice Re-ceiver	"FUNCTION" switch	"AGC"		
	Audio Keying Oscillator	Power switch	"ON"	Associated lamp lights.	
	Audio Amplifier	Power switch	"ON"		
	HF Voice Trans-mitter	"FIL & LOW PLATE" switch	"ON"	Associated lamp lights.	
		"HIGH PLATE" switch	"ON"	Associated lamp lights.	

Note

Ascertain that neither the UHF nor the HF transmitters are in use. The "UHF CARRIER PRESENT" and "HF CARRIER PRESENT" lamps (on the "XMTR SELECTOR" panel) must not be lit. (See figure 3-18.)

(4). Press "UHF SIG. GEN." switch. (See figure 3-24.) A 1020-CPS tone should be heard in the headset connected into the intercom system, and "SIGNAL PRESENT RCVR 1" lamp should be lit.

(5). Press "RCVR 2" (UHF) switch. The same tone should be heard in the headset, and the "SIGNAL PRESENT RCVR 2" lamp should light.

(6). Press "DIVERSITY" switch (UHF). The same tone should be heard in the headset.

(7). On the "XMTR SELECTOR" panel, press "UHF XMTR" switch.

(8). Have the operator at the capsule communication console press the microphone press-to-talk switch. The tone in the headset should cease because of the muting circuitry.

(9). Repeat steps (6), (7), and (8) using "RCVR 1" and "RCVR 2" modes. The same muting action should take place.

B. HF RECEIVING SYSTEM

Perform the following operations at the communication technician's console.

(1). At the "RCVR SYS SELECTOR" panel, press the "HF RCVR" switch. (See figure 3-18.)

(2). At the "HF RCVR CONTROLS" panel, press the "RCVR 1" switch. (See figure 3-22.)

Note

Ascertain that neither the UHF nor the HF transmitter is in use. "UHF CARRIER PRESENT" and "HF CARRIER PRESENT" lamps on "XMTR SELECTOR" panel must not be lit. If either the HF or the UHF transmitters are in use, depress alternate switches until indicator lamps go out.

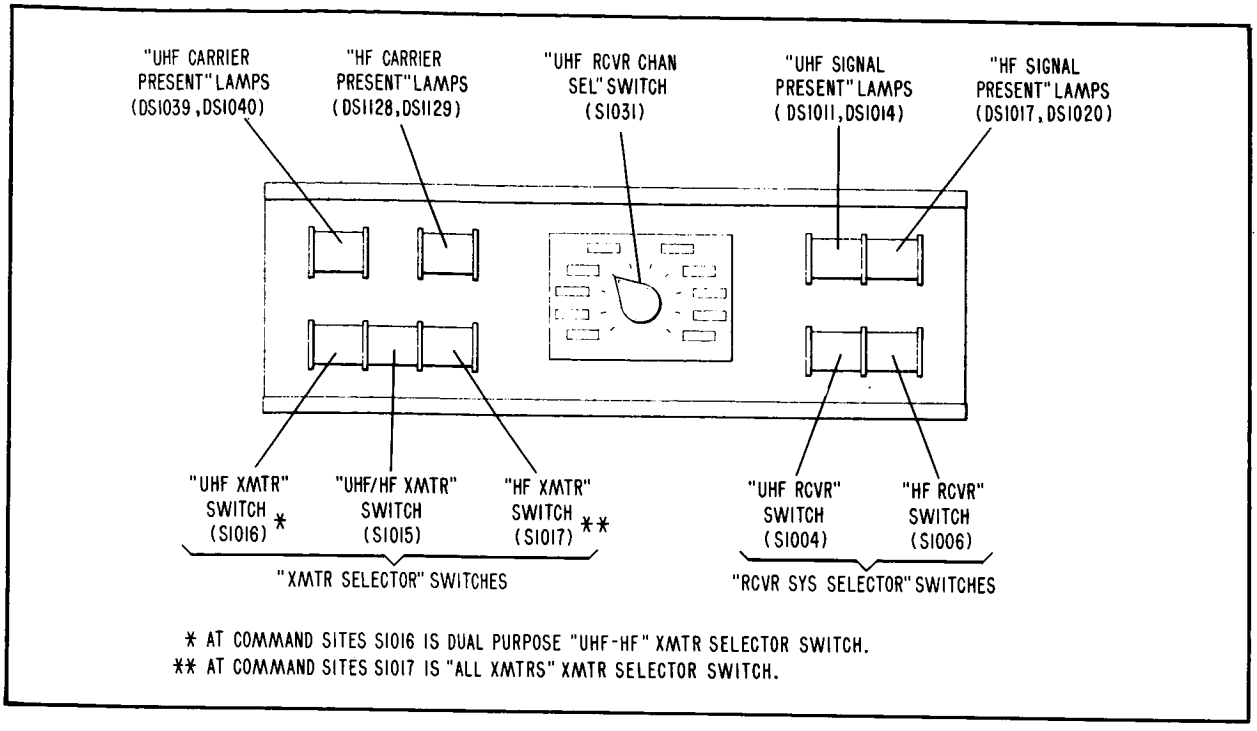

Figure 3-18. Transmitter-Receiver System Selector Panel

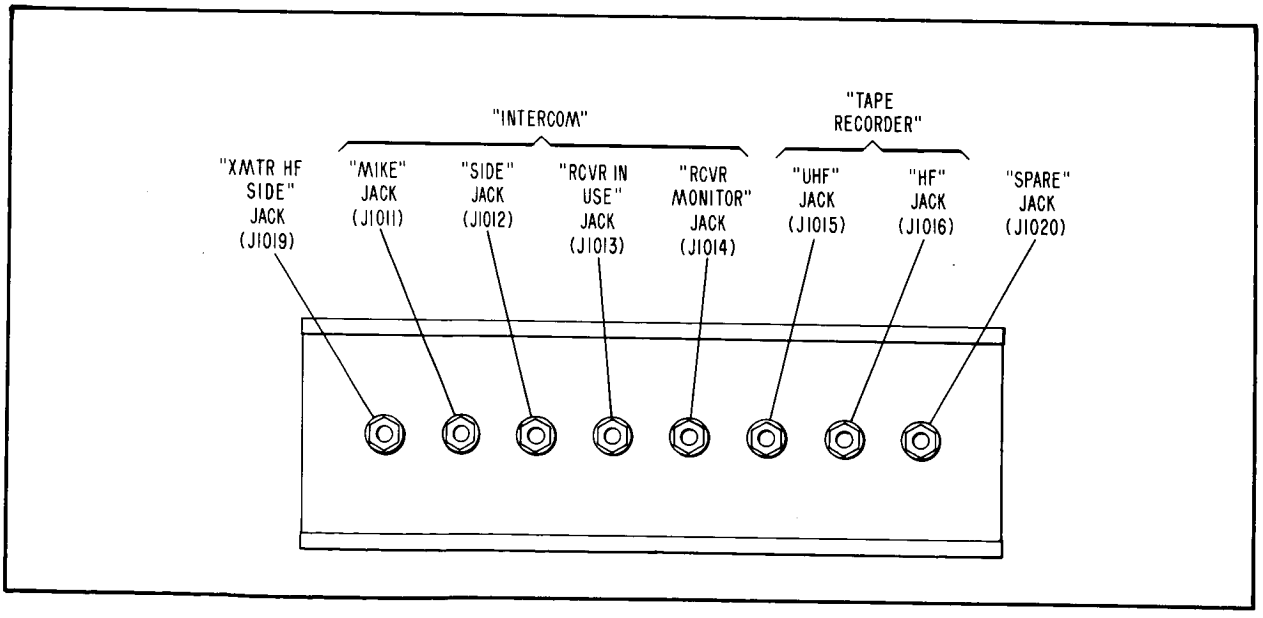

Figure 3-19. Line Monitor Jack Panel

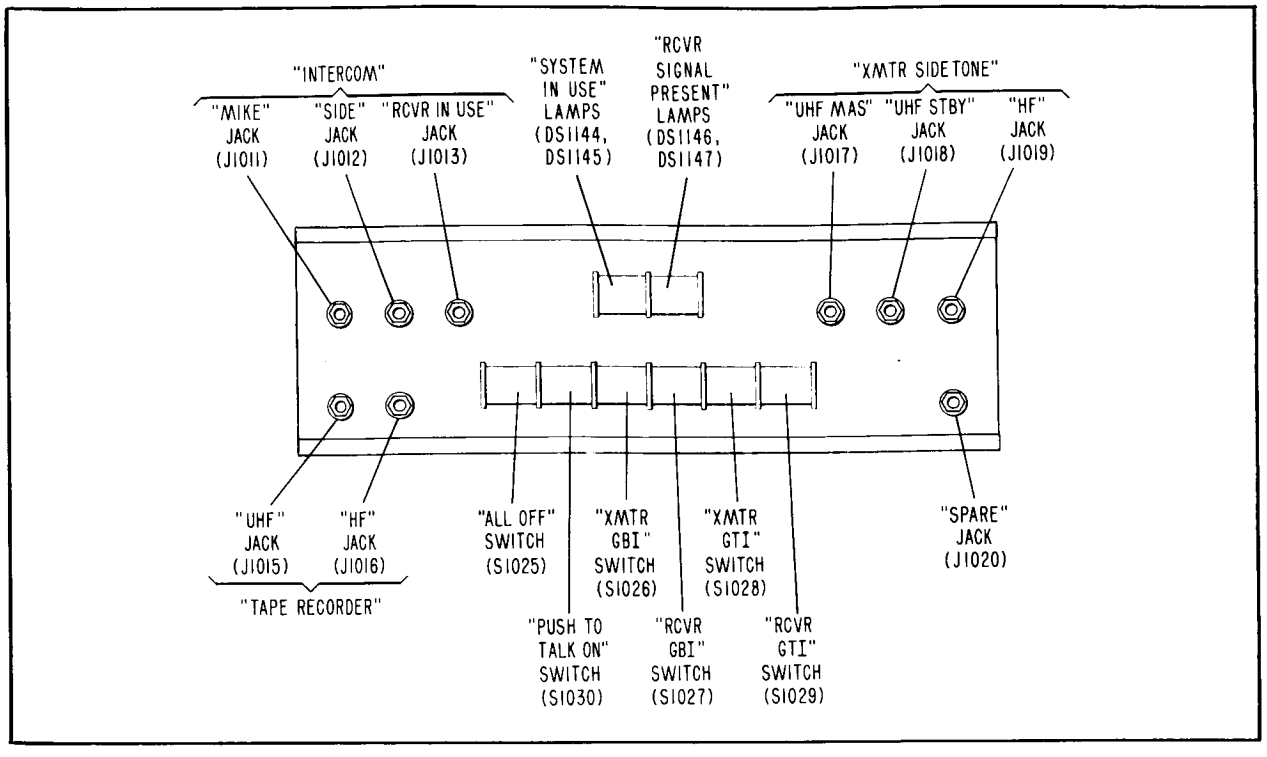

Figure 3-20. Down Range Control Panel (Cape Canaveral)

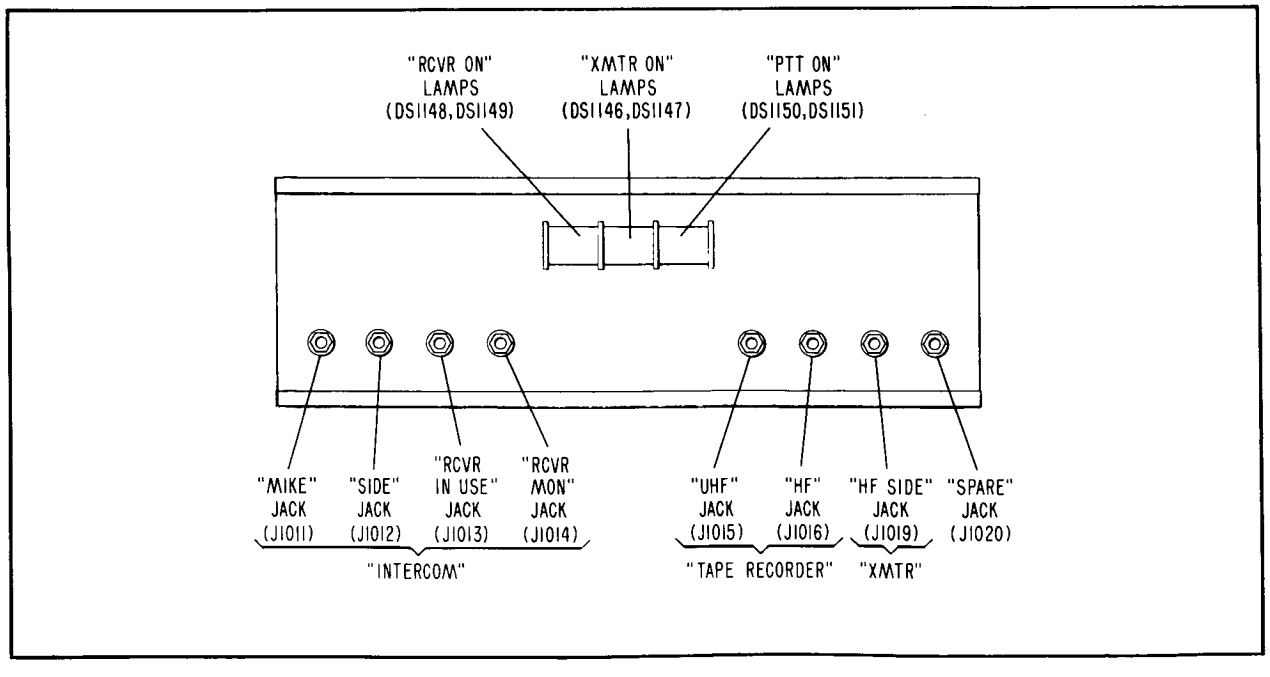

Figure 3-21. Range Control Status Panel (GBI & GTI)

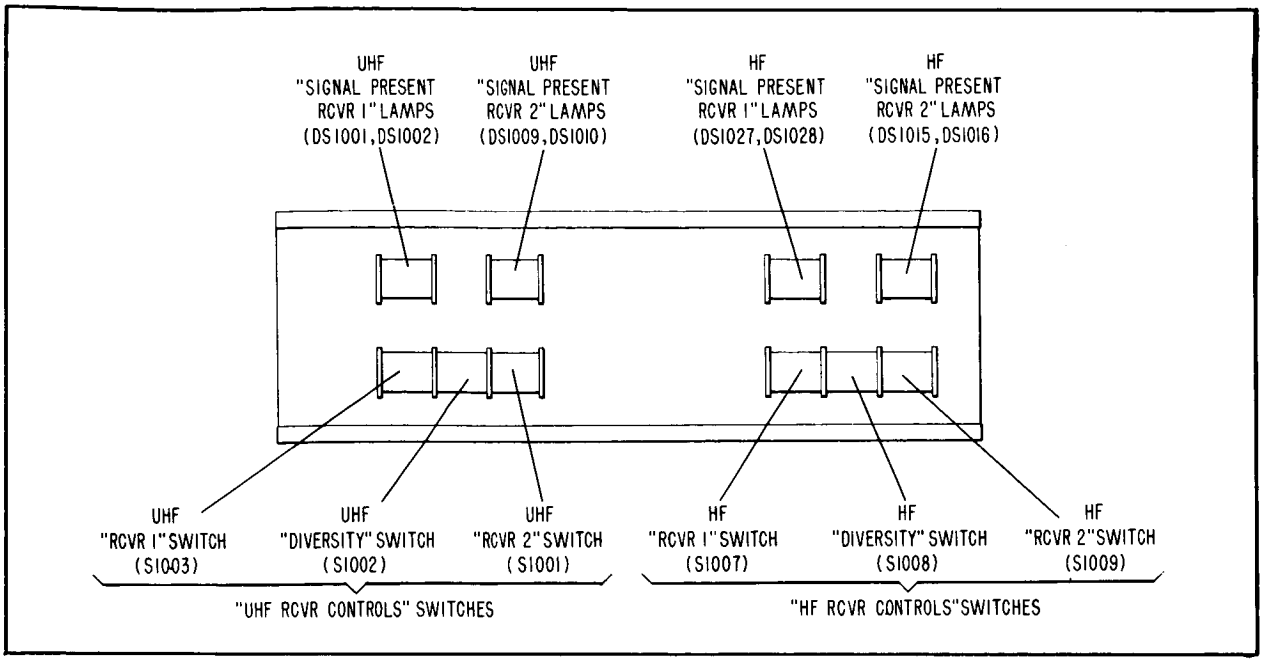

Figure 3-22. UHF/HF Receiver Control Panel

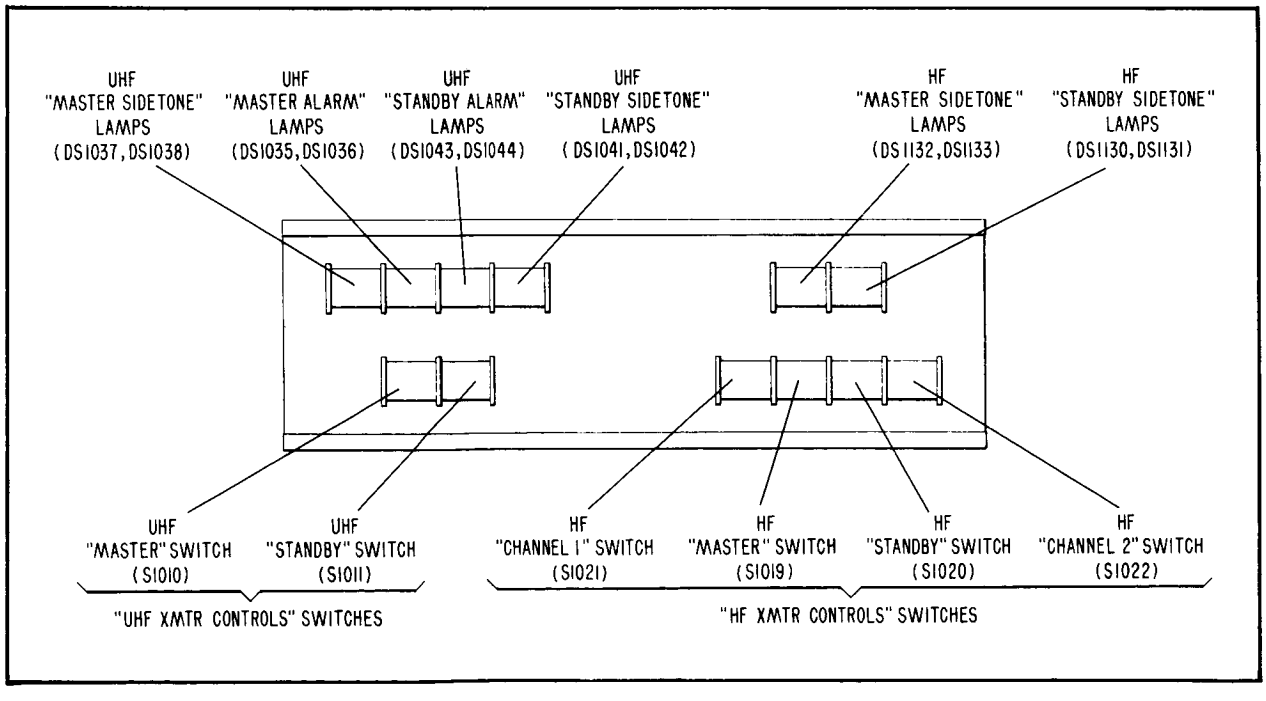

Figure 3-23. UHF/HF Transmitter Control Panel

(3). Press the "HF SIG. GEN" switch. (See figure 3-24.) A 1020-CPS tone should be heard in the headset connected into the intercom system, and "SIGNAL PRESENT RCVR 1" (HF) lamp should light.

(4). Press the "RCVR 2" (HF) switch (figure 3-22). The same tone should be heard in the headset, and "SIGNAL PRESENT RCVR 2" (HF) lamp should light.

(5). Press the "DIVERSITY" (HF) switch. The same tone should be heard in the headset.

(6). At the "XMTR SELECTOR" panel (figure 3-18), press the "HF XMTR" switch.

(7). Have the operator at the capsule communicator console press the microphone press-to-talk switch. The tone in the headset should cease because of the muting circuitry.

(8). Push "RCVR 1" (HF) switch; there should be no tone.

(9). Push "RCVR 2" (HF) switch; there should be no tone.

(10). Depress "UHF SIG. GEN." switch to turn the signal generator off.

C. UHF TRANSMITTER SYSTEM

Perform the following operations at the communication technician's console.

(1). At the "XMTR SELECTOR" panel, push "UHF XMTR" switch. (See figure 3-18.)

(2). At the "UHF XMTR CONTROLS" panel, push "MASTER" switch. (See figure 3-23.)

(3). Have the operator at the capsule communication console speak into the microphone. While the transmitter is being voice modulated, check that the "UHF CARRIER PRESENT" and "MASTER SIDETONE" (UHF) lamps are lit.

(4). While the operator is talking, the transmitter sidetones (from the intercom system) should be clearly heard.

(5). While the operator is talking, press "STANDBY" (UHF) switch. The "UHF CARRIER PRESENT" and "STANDBY SIDETONE" lamps should be lit. The operator's voice should be clearly heard through the intercom system.

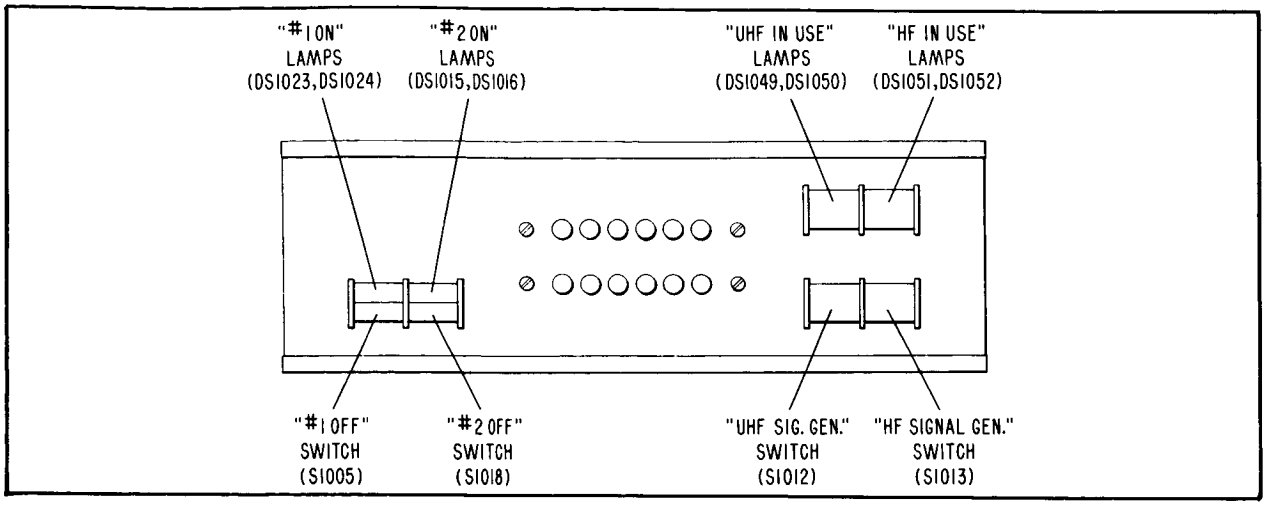

Figure 3-24. Auxiliary Control Panel

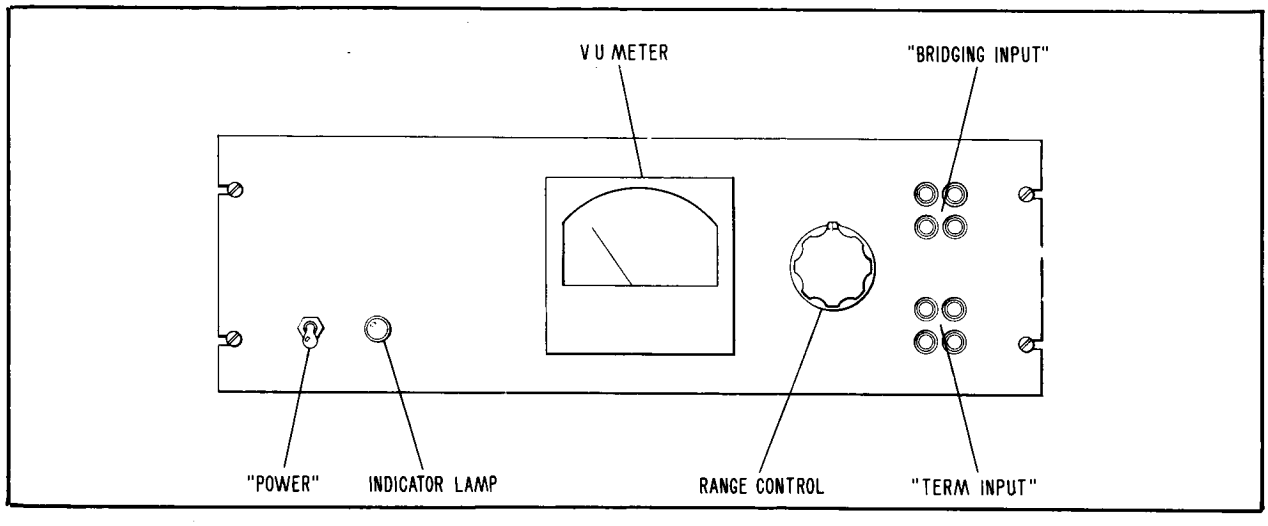

Figure 3-25. Volume Level Indicator Control Panel

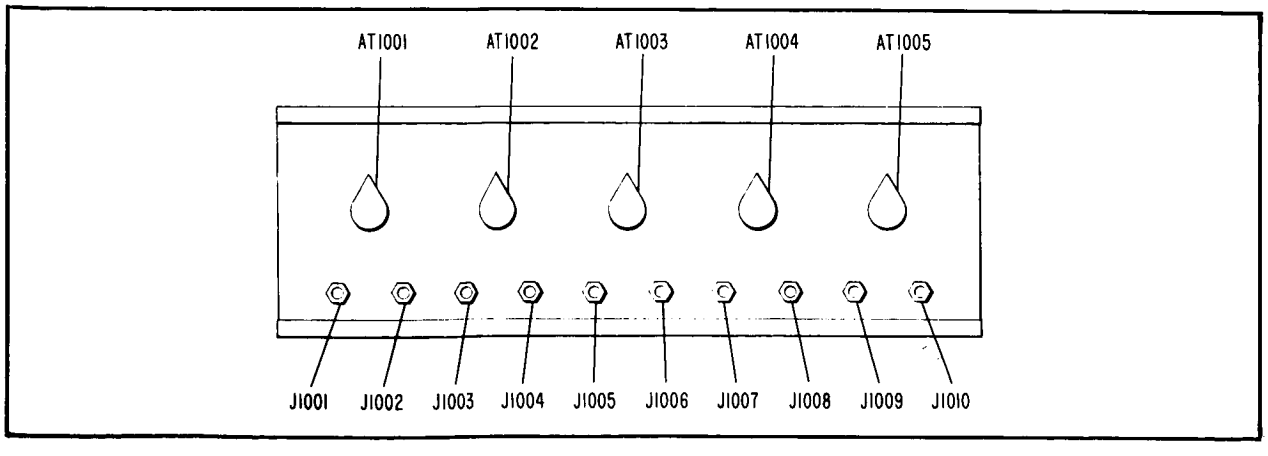

Figure 3-26. Line Level Control Panel

D. HF TRANSMITTER SYSTEM

Perform the following operations at the communication technician's console.

(1). At the "XMTR SELECTOR" panel, press the "HF XMTR" switch. (See figure 3-18.)

(2). At the "HF XMTR CONTROLS" panel, press the "MASTER" (HF) switch and "CHANNEL 1" switch. (See figure 3-23.)

(3). Have the operator at the capsule communication console speak into the microphone. While the transmitter is being voice-modulated, check that the "HF CARRIER PRESENT" and "MASTER SIDETONE" lamps are lit. The transmitter sidetones should be clearly heard through the intercom system.

(4). While the operator continues to talk, press the "CHANNEL 2" switch.

(5). Repeat step (3).

E. OVER-ALL HF AND UHF TRANSMITTER SYSTEM

Perform the following operations at the communication technician's console. It will be necessary for the operator at the capsule communication console (or other convenient microphone connection) to voice-modulate the transmitters for the entire subsystem check.

(1). At the "XMTR SELECTOR" panel, press "UHF/HF XMTR" switch. (See figure 3-18.)

(2). At the "UHF XMTR CONTROLS" panel, press the "MASTER" switch. (See figure 3-20.) The "UHF CARRIER PRESENT" and "MASTER SIDETONE" (UHF) lamps should light.

(3). Push "STANDBY" (UHF). "STANDBY SIDETONE" lamp should light.

(4). At the "HF XMTR CONTROLS" panel, press "MASTER" and "CHANNEL 1" switches. (See figure 3-23.) "HF CARRIER PRESENT" and "MASTER SIDETONES" (HF) lamps should light.

(5). Push "CHANNEL 2" switch. "MASTER SIDETONE" lamp should remain lit.

(6). During entire routine [steps (1) to (5)] the transmitter sidetones should be clearly heard through the intercom system.

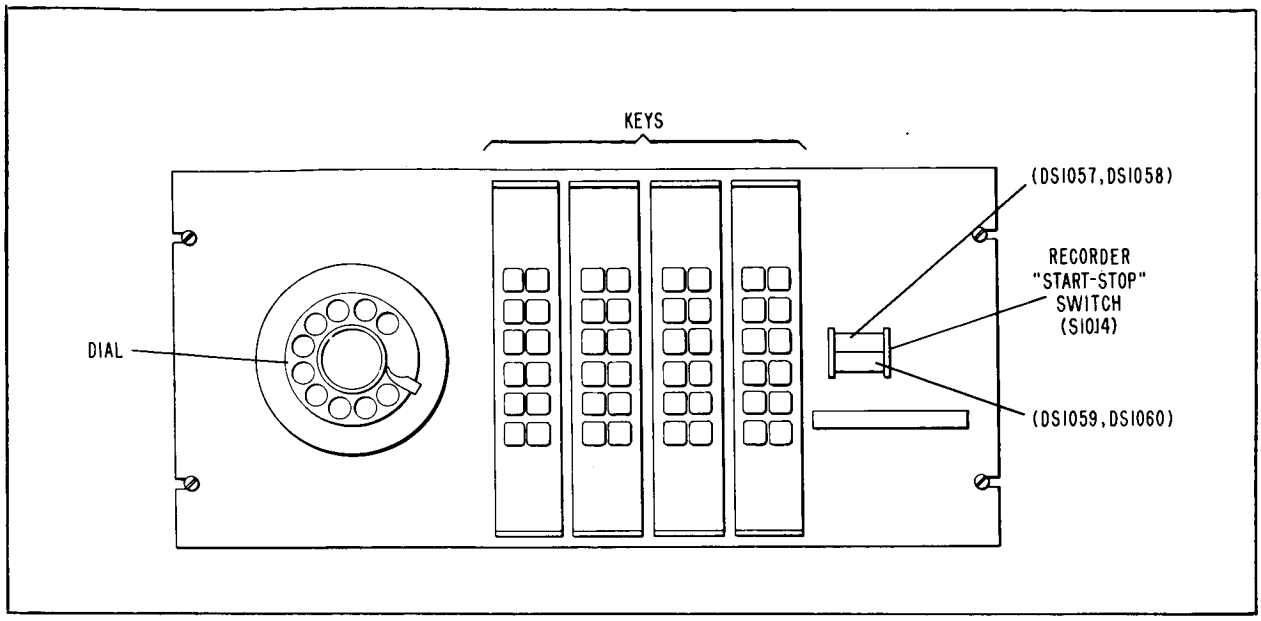

Figure 3-27. Site Intercommunications Panel

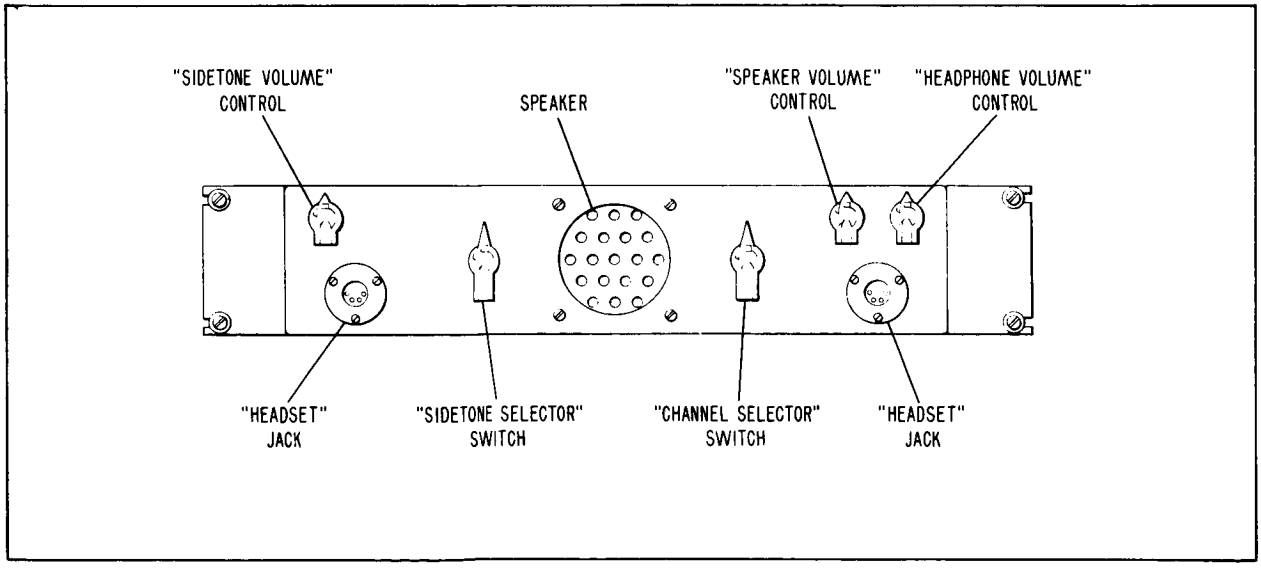

Figure 3-28. Special Intercommunications Panel

F. TAPE RECORDER CONTROL

The remote control switch for the dual-track tape recorder is on the intercommunications panel on the communication technician's console. (See figure 3-25). With the tape recorder controls set for record, have someone monitor the tape recorder operation in the voice receiver rack while the tape recorder "START-STOP" switch is pressed. The tape recorder is left on during normal operation.

G. EMERGENCY VOICE TRANSMITTING SYSTEM

(1). At the capsule communicators console, set "VOICE LOCKOUT" switch to the on position.

(2). At the communication technician's console, observe that the "VOICE LOCKED OUT" lamp (figure 3-30) is lit.

(3). At the communication technician's console, press the "EMER VOICE" switch (figure 3-30), and observe that the switch does not latch or light.

(4). At the capsule communicators console, set "VOICE LOCKOUT" switch to the off position.

(5). At the communication technician's console, observe that the "VOICE LOCKED OUT" lamp (figure 3-30) goes out.

(6). At the communication technician's console, press the "EMER VOICE" switch (figure 3-30), and observe that the switch is latched and lit.

(7). Have the operator at the communication technician's console speak into the microphone. Observe that the indication on the "DEVIATION" meter of Command Transmitter AN/FRW-2 varies with modulation.

H. CONTROL OF DOWN-RANGE SITES

Remote control of the down-range sites is exercised from the communication technician's console at Cape Canaveral. However, before remote control of these two sites can be accomplished from Cape Canaveral, it is necessary that one of the receivers and one of the transmitters at Grand Bahama Island and Grand Turk Island be placed in operation locally. Any mode (HF or UHF, receiver No. 1 or No. 2, master transmitter or standby, etc.) of reception and transmission can be used; however, the mode which results in the highest quality should be selected. A procedure for selecting the various modes of reception and transmission is given in paragraph 3-4.A. through 3-4.E.

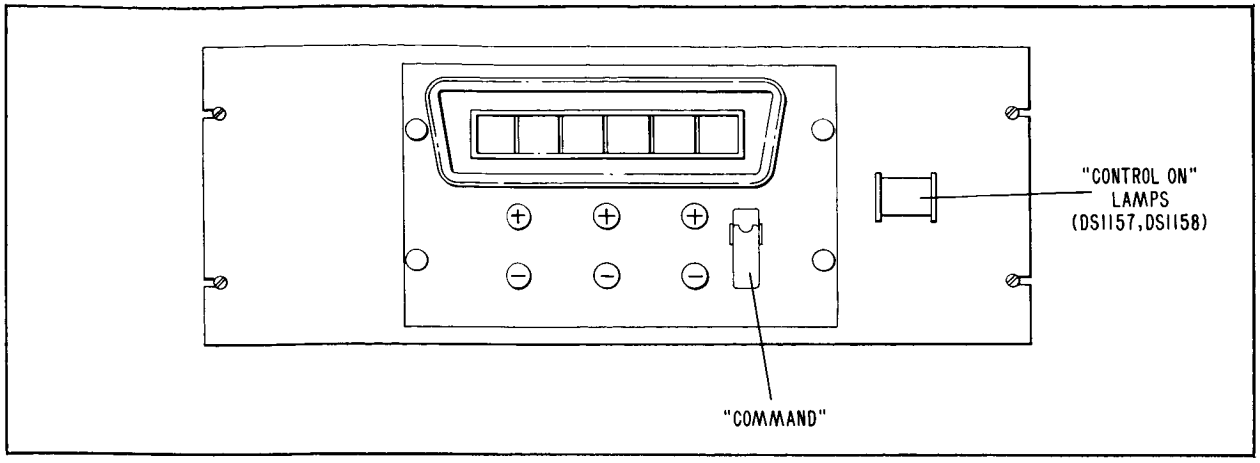

Figure 3-29. Retrofire Change Display Unit

Note

Observe the "SYSTEM IN USE" lamp on the down-range control panel (figure 3-20). If the lamp is lit, all down-range control circuits are in use, indicating that control of these sites from Cape Canaveral is not possible at this time. Complete this check out procedure when the "SYSTEM IN USE" lamp goes out, indicating that a control circuit for the down-range sites is available.

(1). RECEPTION AND TRANSMISSION FROM SAME SITE

(a). At Cape Canaveral, depress "PUSH-TO-TALK ON" switch (figure 3-20) and momentarily press "RCVR GBI" switch (figure 3-20). Receiver "ON" GBI lamp, "RCVR SIGNAL PRESENT" lamp (figure 3-20) should light. Also, the voice reception at Grand Bahama Island should be heard over the intercom system at Cape Canaveral. At Grand Bahama Island, "RCVR ON" lamp (figure 3-21) should be lit.

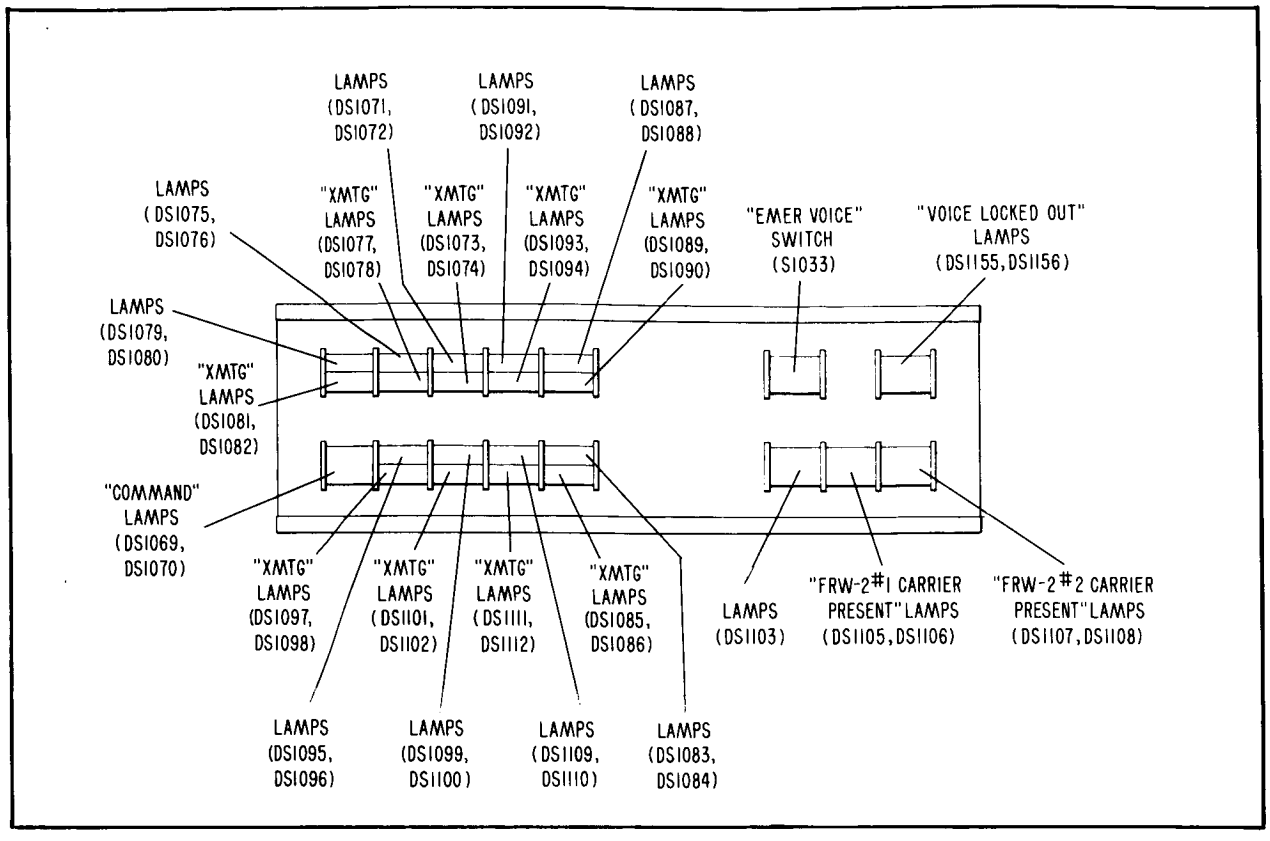

Figure 3-30. Command Display Panel

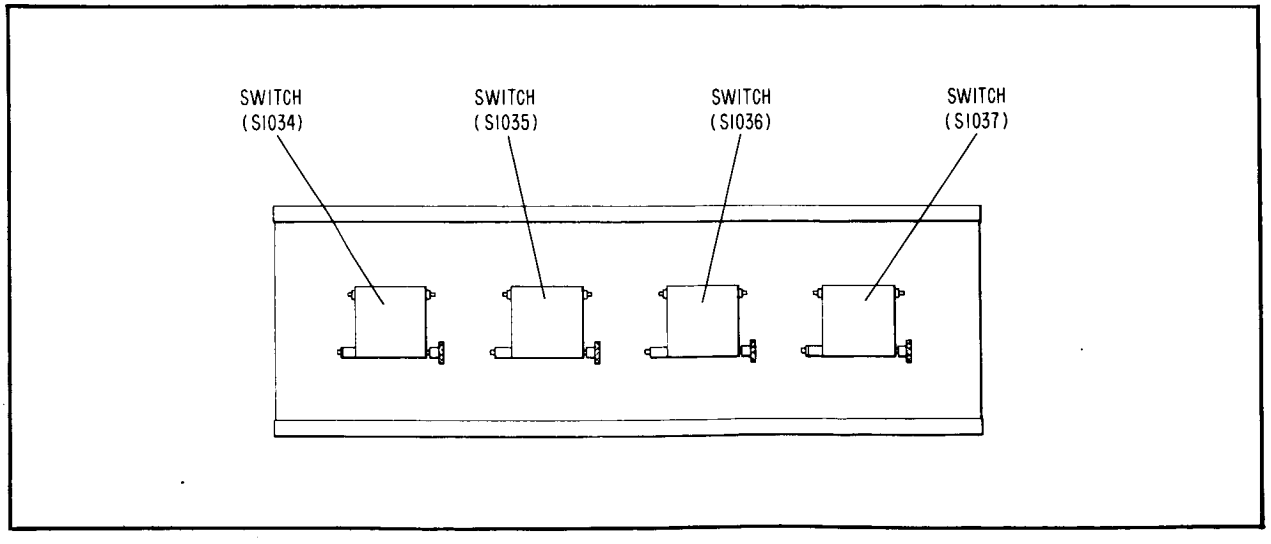

Figure 3-31. Command Actuation Panel

(b). At Cape Canaveral, momentarily press "XMTR GBI" switch (figure 3-20). At Cape Canaveral, transmitter "ON" GBI lamp should light, and at Grand Bahama Island "XMTR ON" lamp (figure 3-21) should light. At Cape Canaveral, depress push-to-talk switch on the microphone. At Grand Bahama Island, "PTT ON" lamp (figure 3-21) should light. Talk into the microphone. The microphone audio from Cape Canaveral should be heard as transmitter sidetone over the intercom system at Grand Bahama Island.

(c). At Cape Canaveral, momentarily press "ALL OFF" switch (figure 3-20) to restore local site control.

(d). Check the reception and transmission from Grand Turk Island by repeating steps (a) through (c), and substituting the appropriate switch and indicator lamp designations for Grand Turk Island.

(2). RECEPTION AND TRANSMISSION FROM DIFFERENT SITES

(a). At Cape Canaveral, depress "PUSH-TO-TALK ON" switch (figure 3-20), and momentarily press "RCVR GTI" switch (figure 3-20). Receiver "ON" GTI lamp and "RCVR SIGNAL PRESENT" lamp (figure 3-20) should light. Also, the voice reception at Grand Turk Island should be heard over the intercom system at Cape Canaveral. At Grand Turk Island, "RCVR ON" lamp (figure 3-18) should be lit.

(b). At Cape Canaveral, momentarily press "XMTR GBI" switch (figure 3-20). At Cape Canaveral, transmitter "ON" GBI lamp should light, and at Grand Bahama Island "XMTR ON" lamp (figure 3-21) should light. At Cape Canaveral, depress push-to-talk switch on the microphone. At Grand Bahama Island, "PTT ON" lamp (figure 3-21) should light. Talk into the microphone. The microphone audio from Cape Canaveral should be heard as transmitter sidetone over the intercom system at Grand Bahama Island.

(c). At Cape Canaveral, momentarily press "ALL OFF" switch (figure 3-20) to restore local site control.

(d). Check the reception from Grand Bahama Island while using Grand Turk Island as the transmitting site by repeating steps (a) through (c), and substituting the appropriate switch and indicator lamp designations in the procedure.

3-5. NORMAL OPERATING PROCEDURES

A. RECEIVING SYSTEM

The technician at the communication technician's console can select either the UHF or HF system by pressing the "UHF RCVR" or "HF RCVR" switch on the "RCVR. SYS. SELECTOR" panel.

(1). UHF RECEIVING SYSTEM

There are three choices of UHF operation at the "UHF RCVR CONTROLS" panel. (See figure 3-22.)

(a). During normal UHF operation, the combined audio from the diversity combiner is used for the system. To select this mode of operation, press the "DIVERSITY" switch.

(b). If the diversity combiner is inoperative or if any component in one of the receiving signal channels is not functioning properly, normal operating procedure calls for selection of audio from the properly operating receiver channel. To select audio from receiver #1, press the "RCVR 1" switch; to select audio from receiver #2, press "RCVR 2" switch.

(c). Select the desired operating frequency by means of "UHF RCVR CHANNEL SELECTOR" switch. This switch is common to both UHF receivers.

(2). HF RECEIVING SYSTEM

There are three choices of HF operation on the "HF RCVR CONTROLS" panel. (See figure 3-22.)

(a). Press "DIVERSITY" switch for normal operation. The audio from both receivers is automatically combined to present the best of the two HF receiving systems on the common "RCVR 1" audio input.

(b). Push "RCVR 1" or "RCVR 2" switch when it is desirable to use an audio from a single receiving system.

B. TRANSMITTING SYSTEM

The technician at the communication technician's console can select HF, UHF, or both transmitting systems; he may select these and in addition use emergency voice simultaneously by selecting "ALL XMTRS". On "XMTR SELECTOR" panel (figure 3-18) press "UHF XMTR" switch for UHF transmitting system only, press "HF XMTR" switch for HF transmitting system, or press "UHF/HF XMTR" for both UHF and HF transmitting systems, or "ALL XMTRS" switch for all three transmitters.

(1). UHF TRANSMITTING SYSTEM

At the "UHF XMTR CONTROLS" panel (figure 3-23), press the "MASTER" or "STANDBY" switch to select the desired UHF transmitter.

(2). HF TRANSMITTING SYSTEM

On the "HF XMTR CONTROLS" panel (figure 3-23), press the "MASTER" switch and the "CHANNEL 1" switch to select one channel of one HF transmitter. Press "CHANNEL 2" switch to change to the second channel of the same HF transmitter.

(3). ALL TRANSMITTERS

The simultaneous use of the three types of transmitters for voice transmission, i.e., UHF, HF, and EMER. VOICE (command) is possible at all command sites. For other than command sites the selection of each transmitter separately or UHF and HF simultaneously is retained. At command sites the procedure for selecting UHF or HF is different than at the other sites.

At the command sites a single push switch S16 (figure 3-18), is used to alternately select UHF or HF transmission. The corresponding section of the nameplate will light indicating the transmitter that has been selected. UHF transmission will be the dominant condition; i.e., it will be the transmission selected by the first push after any other condition of transmission. As before, any selection will automatically cancel any previous selection.

C. RECOVERY TEAM COMMUNICATION EQUIPMENT

(1). RECEIVING SYSTEM

The HF voice receiver is operated in accordance with the applicable instruction book listed in table 1-II. Audio can be monitored by inserting a headset into the "PHONES" jack on the receiver front panel or by using the phone jacks and loudspeaker on the audio amplifier and loudspeaker panel. When the loudspeaker is used for monitoring, rotate "LINE GAIN" control on the receiver (figure 3-4) to position "5", set loudspeaker switch S1 on the audio amplifier (figure 3-35) to "ON", and adjust "MONITOR VOLUME" control R1 on the control and patch panel (figure 3-34) for the desired listening level.

(2). TRANSMITTING SYSTEM

The operator at the recovery team console can select CW, MCW, or voice modulation of the recovery team communication transmitter.

(a). CW TRANSMISSION OPERATING PROCEDURES

1. On the HF voice receiver, set "BREAK IN" switch (figure 3-4) to "ON".

2. On the patch and control panel, set "TRANSMITTER SELECTOR" switch (figure 3-34) to "CW".

3. On the patch and control panel, set "RECEIVE-SEND" switch to "SEND".

4. On the patch and control panel, insert the telegraph key plug into the "TELEGRAPH KEY" jack. The transmitter is now ready for keying.

(b). MCW TRANSMISSION OPERATING PROCEDURES

1. On the HF voice receiver, set "BREAK IN" switch (figure 3-4) to "ON".

2. On the patch and control panel, set "TRANSMITTER SELECTOR" switch (figure 3-34) to "MCW".

3. On the patch and control panel, set "RECEIVE-SEND" switch to "SEND".

4. On the patch and control panel, insert the telegraph key plug into the "TELEGRAPH KEY" jack. The transmitter is now ready for keying.

(c). VOICE TRANSMISSION OPERATING PROCEDURES

1. On the HF voice receiver, set "BREAK IN" switch (figure 3-4) to "ON".

2. On the patch and control panel, set "TRANSMITTER SELECTOR" switch (figure 3-34) to "AM".

3. On the patch and control panel, set "RECEIVE-SEND" switch to "SEND".

4. On the patch and control panel, insert the microphone plug into the "MICROPHONE" jack. Press the push-to-talk button and talk into the microphone in a normal speaking level.

3-6. EMERGENCY OPERATION PROCEDURES

A. VOICE RECEIVING SYSTEM

(1). HF RECEIVING SYSTEM

The HF receiving system has three modes of operation. (See figure 3-19.)

(a). DIVERSITY

(b). RCVR 1

(c). RCVR 2

If the "DIVERSITY" mode of HF reception is disabled, select "RCVR 1" operation or "RCVR 2" operation. If the "RCVR 1" HF reception

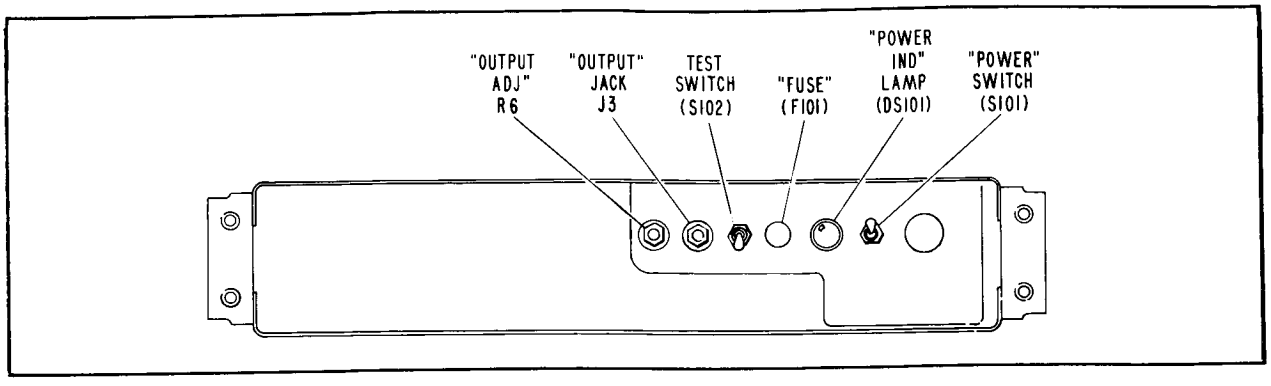

Figure 3-32. Audio Code Oscillator

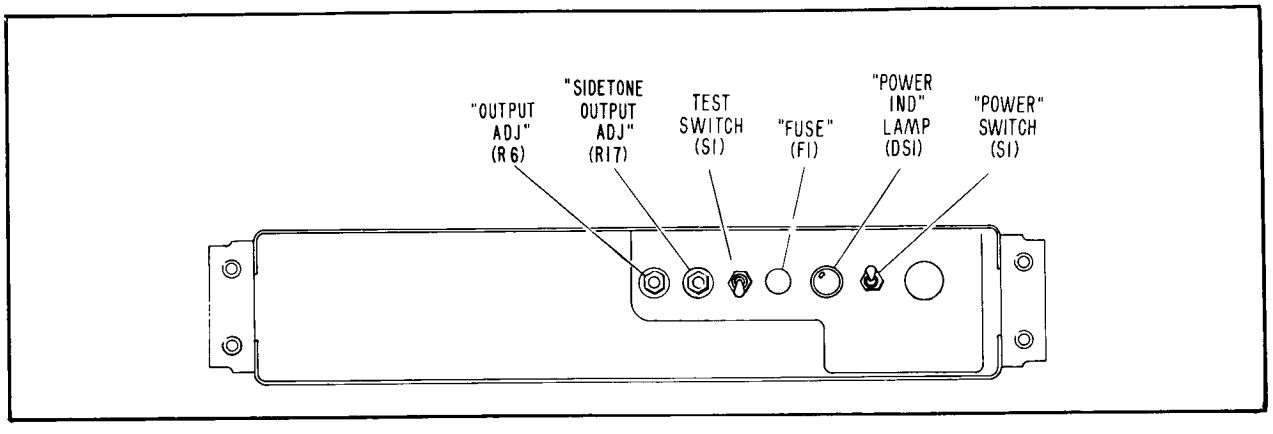

Figure 3-33. Audio Keying Oscillator (P/O Recovery Team Console)

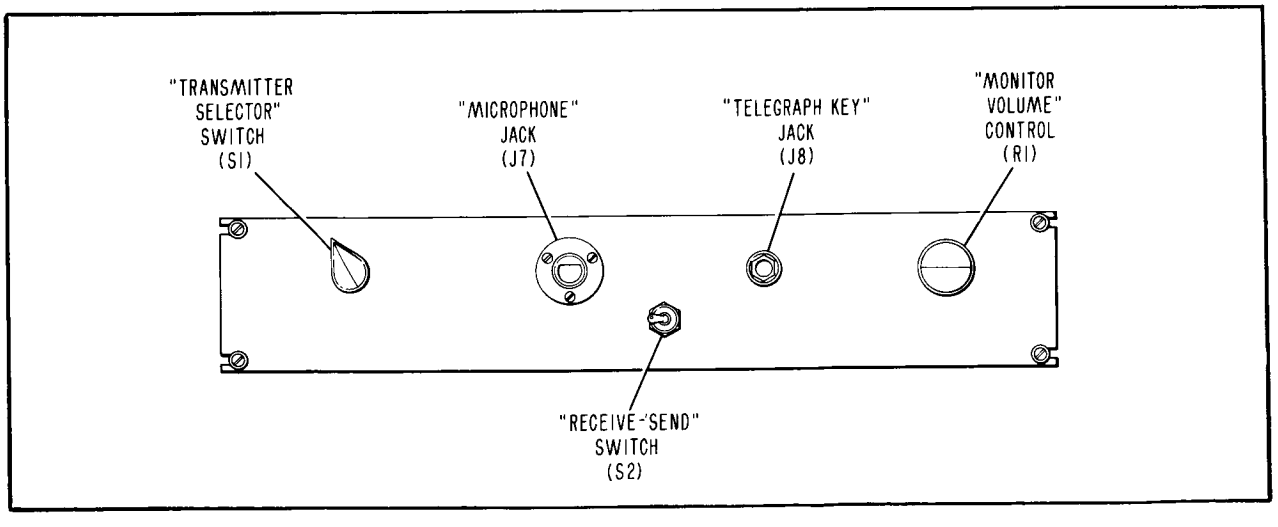

Figure 3-34. Patch and Control Panel (P/O Recovery Team Console)

is lost select "RCVR 2". If all modes of HF operation are lost, select the UHF modes of operation. Emergency corrective maintenance procedures using the interchange of operative subunits might retain at least one HF receiving mode.

(2). UHF RECEIVING SYSTEM

The UHF receiving system has three modes of operation (see figure 3-21):

(a). DIVERSITY

(b). RCVR 1

(c). RCVR 2.

If the "DIVERSITY" mode of UHF reception is disabled, select either "RCVR 1" or "RCVR 2" operation. If the "RCVR 1" operation is disabled, select "RCVR 2" and vice versa. If all modes of UHF operation are lost, select HF modes of operation. Emergency corrective maintenance procedures using the interchange of operative subunits might retain at least one UHF receiving mode.

(3). HF AND UHF RECEIVING ALTERNATES

In the event that the UHF and HF are partially disabled, the best audio selection will be made by the communications technician.

(4). COMMUNICATION TECHNICIAN'S CONSOLE

The malfunction of a push-type selector switch (discussed in paragraph 4-2) can in some cases be compensated for temporarily by manually holding in the switch.

(5). EMERGENCY TURN-OFF OF EQUIPMENT PROCEDURE

(a). COMMUNICATION TECHNICIAN'S CONSOLE

To remove all power from this console, place switch circuit breaker CB1001 in "OFF" position. Leave the power off only for the time required to correct the console wiring problems or replace subunits.

(b). VOICE RECEIVER RACK

To remove all power from this rack, place the "POWER" switch in "OFF" position.

B. VOICE TRANSMITTING SYSTEM

(1). HF TRANSMITTING SYSTEM

There are two channels of operation on each HF voice transmitter. In the event that "CHANNEL 1" of the HF transmitter becomes disabled, select "CHANNEL 2" and vice versa. If all modes of the HF transmitting system are lost, select the UHF transmitting system. Emergency corrective maintenance procedures using the interchange of operative subunits might retain at least one HF transmitting mode.

(2). UHF TRANSMITTING SYSTEM

If either "MASTER" or "STANDBY" UHF transmitter is disabled, select the other. If both UHF transmitters are disabled, switch to the HF transmitting system. Emergency corrective maintenance procedures using the interchange of operative subunits might retain at least one UHF transmitting mode.

(3). UHF/HF TRANSMITTING SYSTEM

Both UHF and HF transmitting systems can be used as long as one mode of each system is still operative. If abnormal conditions develop, switch to the system that gives the most effective results.

(4). MCW TRANSMISSION

MCW transmission is available as emergency backup. If voice transmission of either the HF or UHF transmitters is disabled, switch to hand keyed telegraph (MCW) as an emergency measure.

(5). COMMAND VOICE TRANSMITTING SYSTEM

The command transmitter is available for operational requirements or emergency backup. This selection can be made at the communication technician's console.

(6). EMERGENCY TURN-OFF OF EQUIPMENT

(a). HF TRANSMITTER

To remove power, place "FIL-LOW PLATE" and "HIGH PLATE" in "OFF" position.

(b). UHF TRANSMITTER RACK

To remove power, place the "POWER" switch on the associated power panel in the "OFF" position.

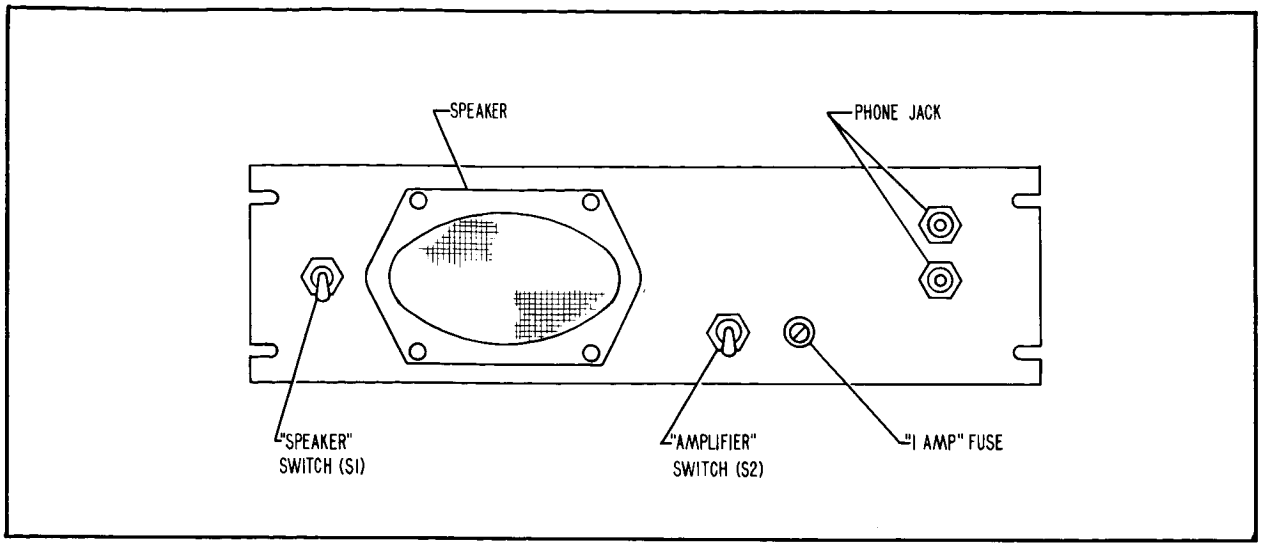

Figure 3-35. Audio Amplifier (P/O Recovery Team Console)

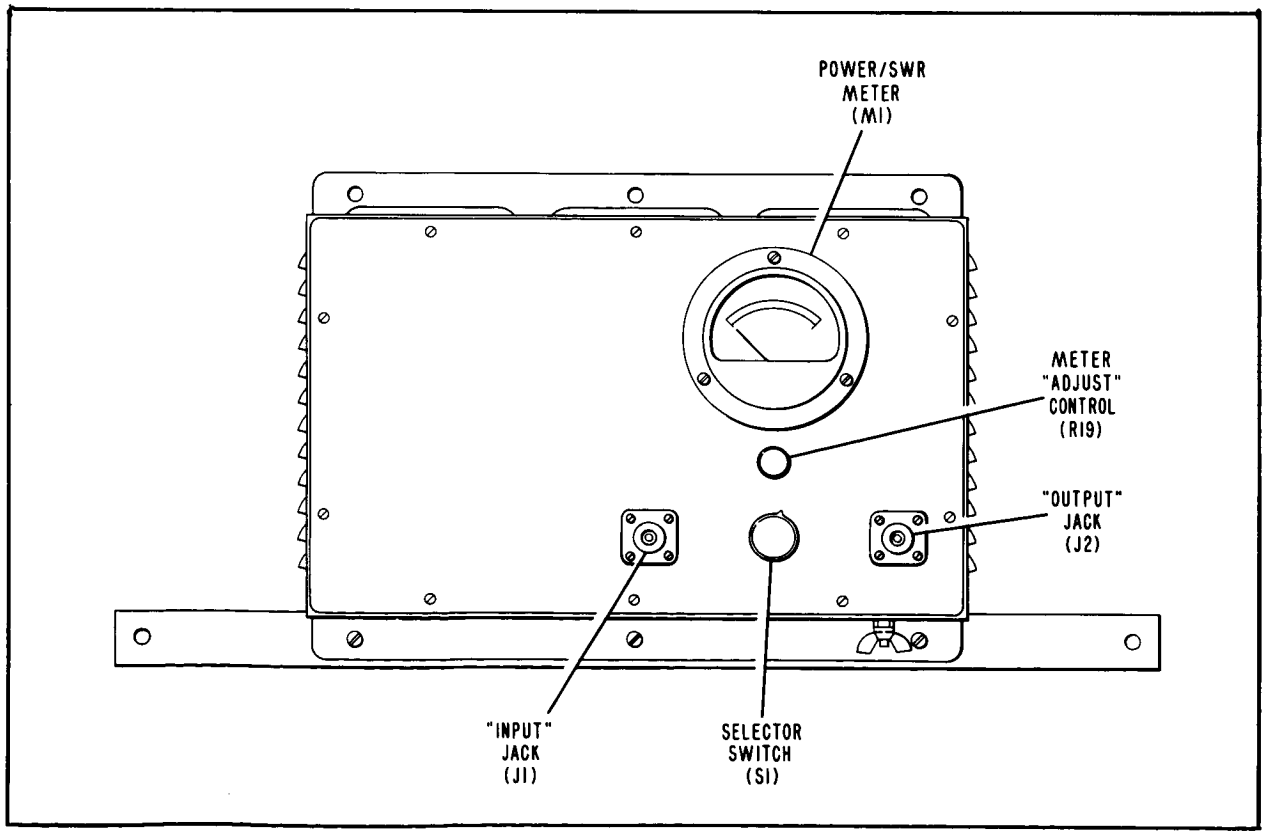

Figure 3-36. RF Tuner (Used with Recovery Team Communication Transmitter)

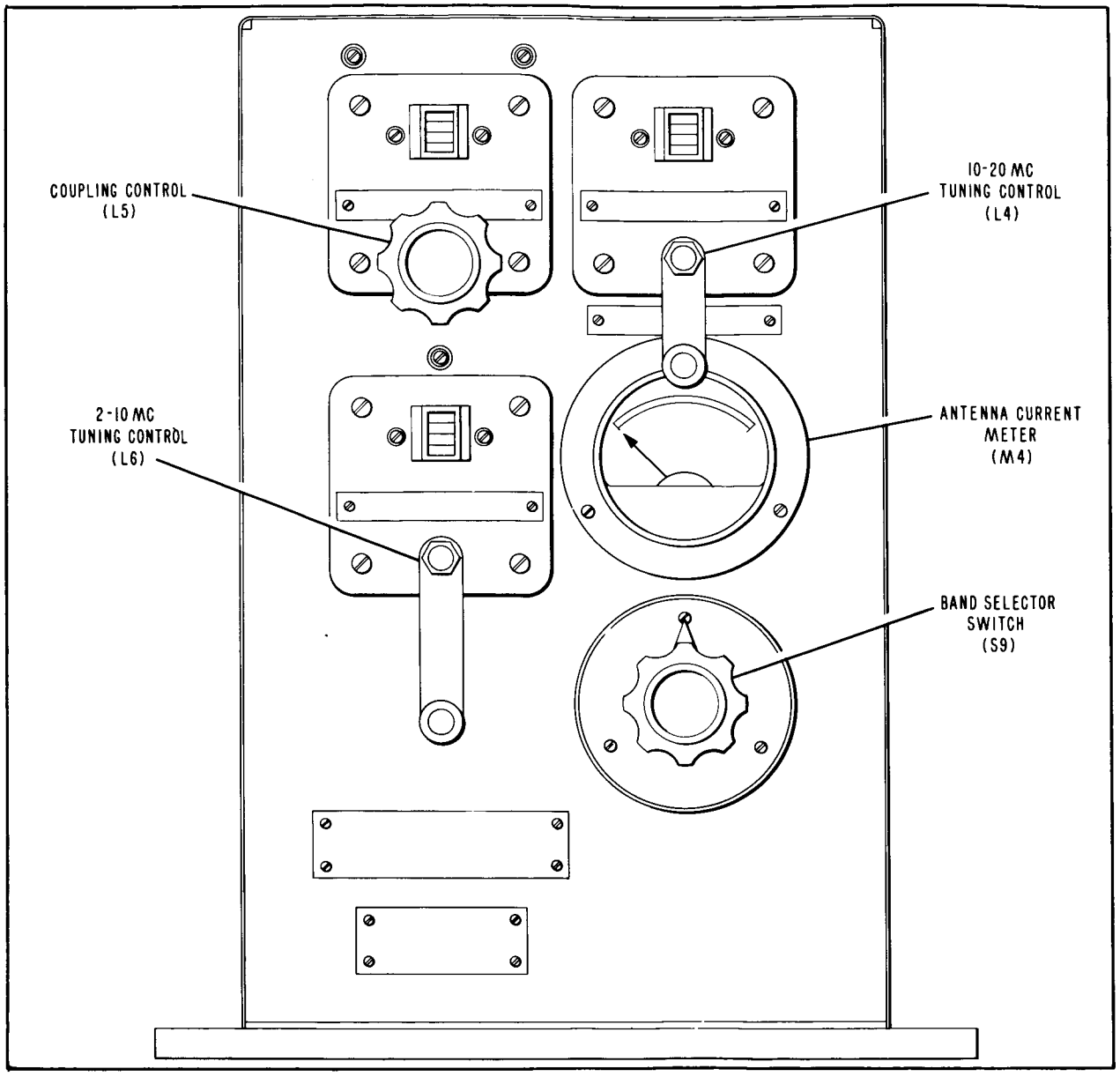

Figure 3-37. SWR and Power Meter (Used with Recovery Team Communication Transmitter)

(7). VOICE TRANSMITTING BACK UP

(a). A back-up facility is provided for using the transmitter van with a receiving antenna should the transmitter antenna become defective. This requires the movement of the transmitter van from its hardstand pad at the transmitter area to the auxiliary hardstand at the receiving area. To do this, proceed as follows.

1. Disconnect, at the van end, all cables from the transmitter van to the cable termination box.

Note

These cables remain at the cable termination box.

2. Disconnect all other cables; i.e., power antenna and amplidyne, and move these with the transmitter van.

3. Move the transmitter van to the auxiliary hardstand at the receiving site.

4. Connect the power cable to the power stub on the receiving antenna. See figure 3-38 for the location of the RF connector bracket, and see figure 3-39 for identification of terminals on the RF coaxial relays.

Note

Be certain to ground the transmitter van and provide a common ground with the antenna tower.

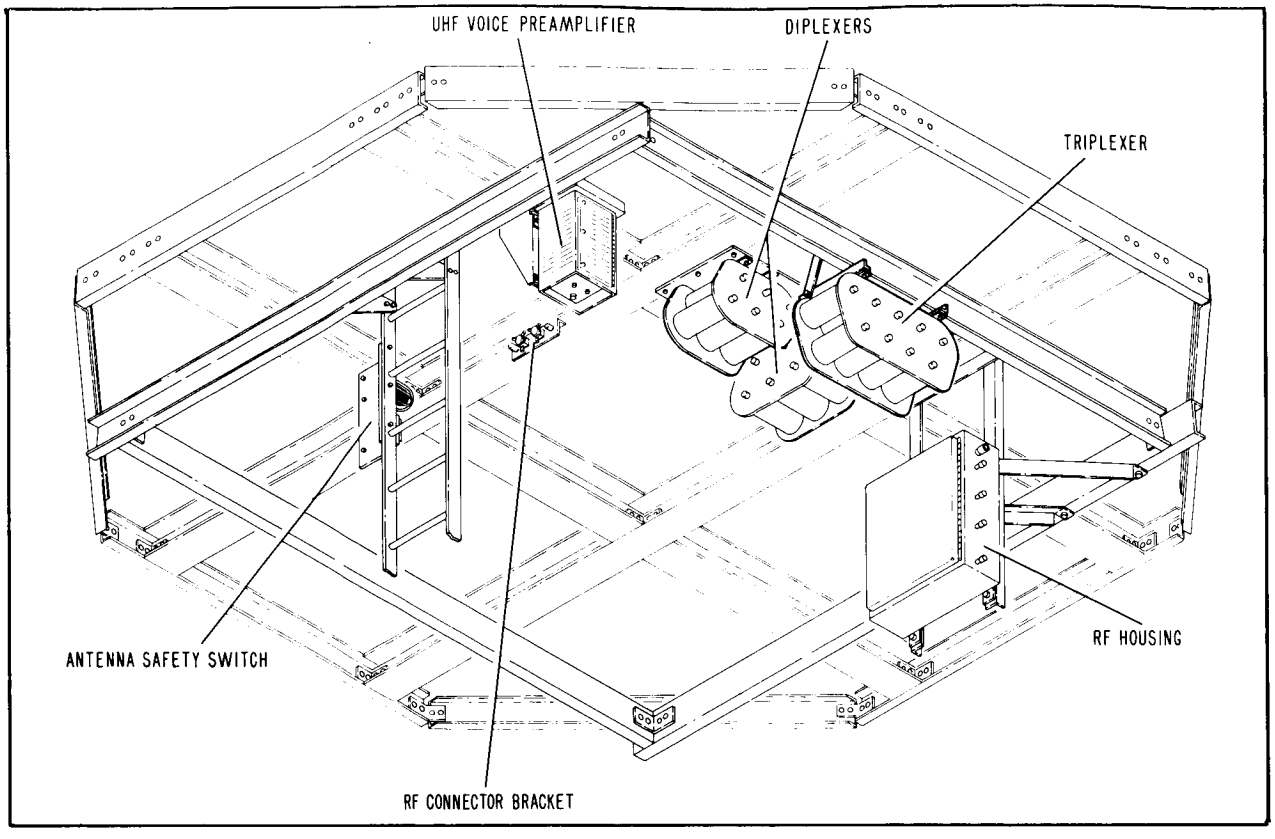

Figure 3-38. Components Under Voice Antenna No. 2 Platform

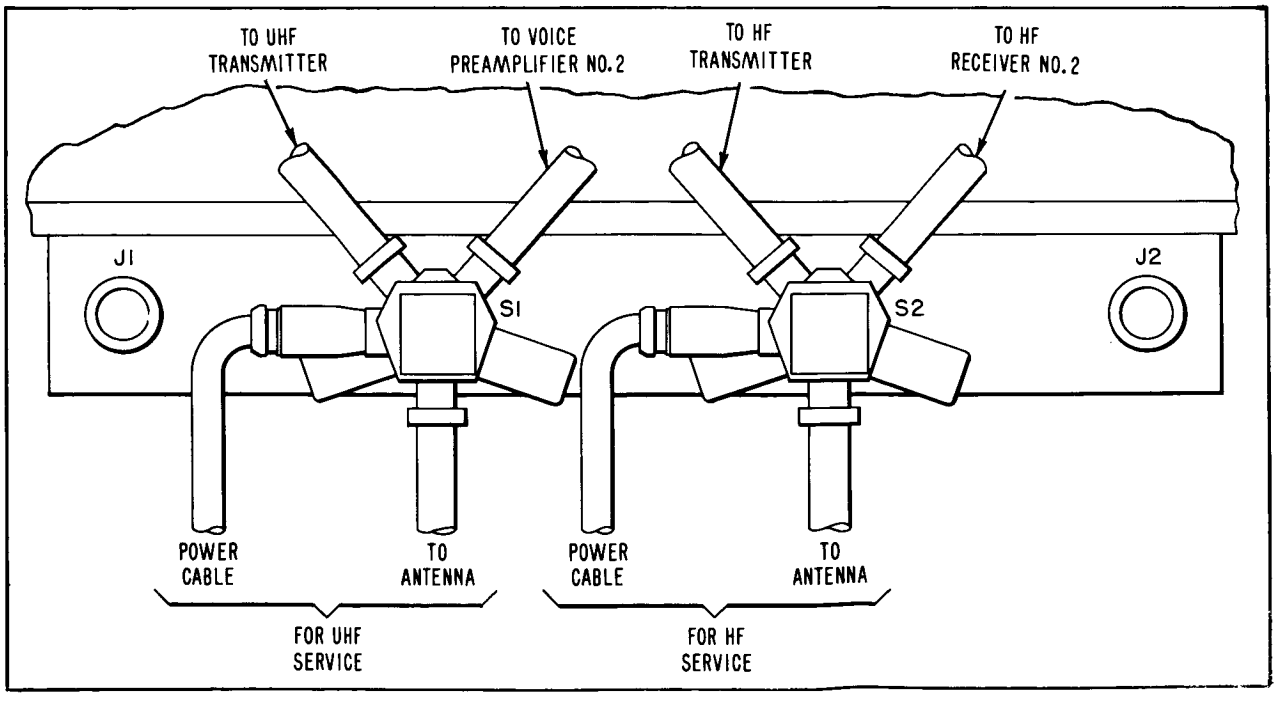

Figure 3-39. Voice Antenna No. 2 Coaxial Switches

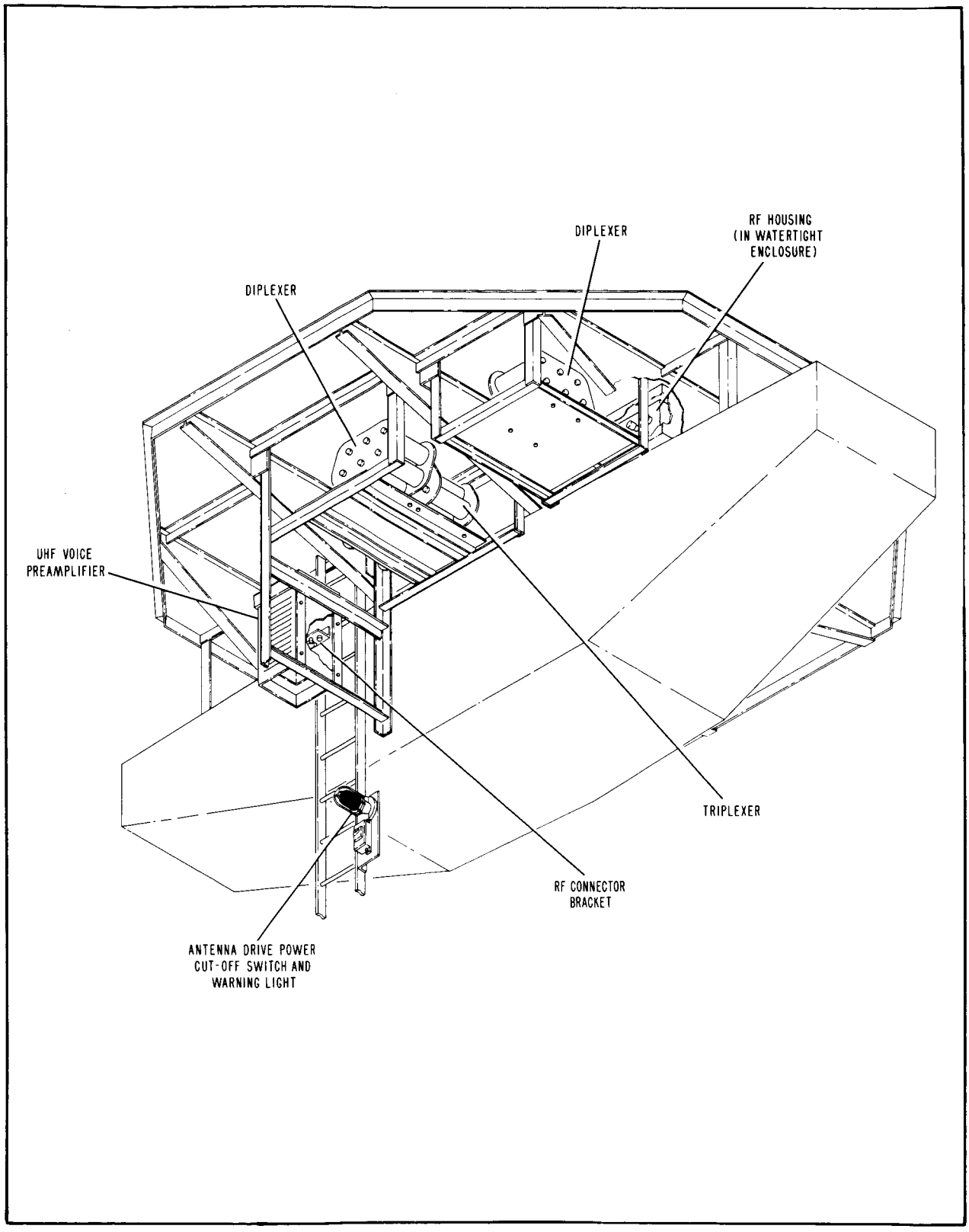

Figure 3-40. Components Under Voice Antenna Platform (Ships)

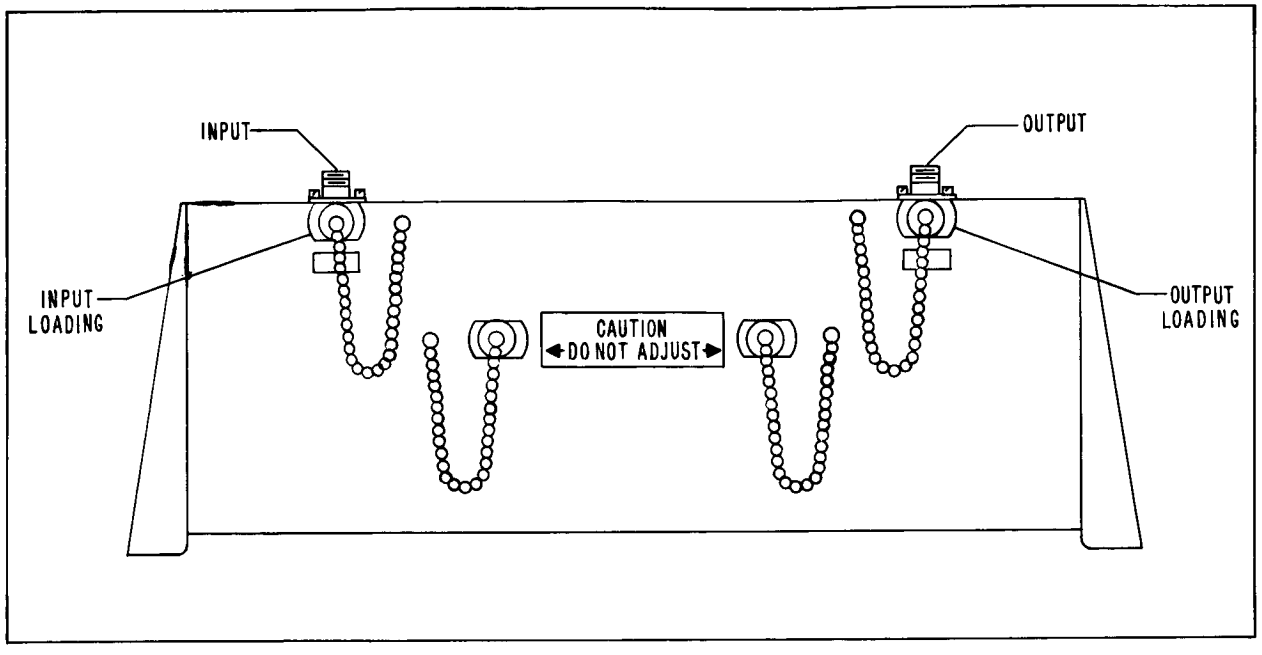

Figure 3-41. HF Voice Transmitter Band Pass Filter (Ships)

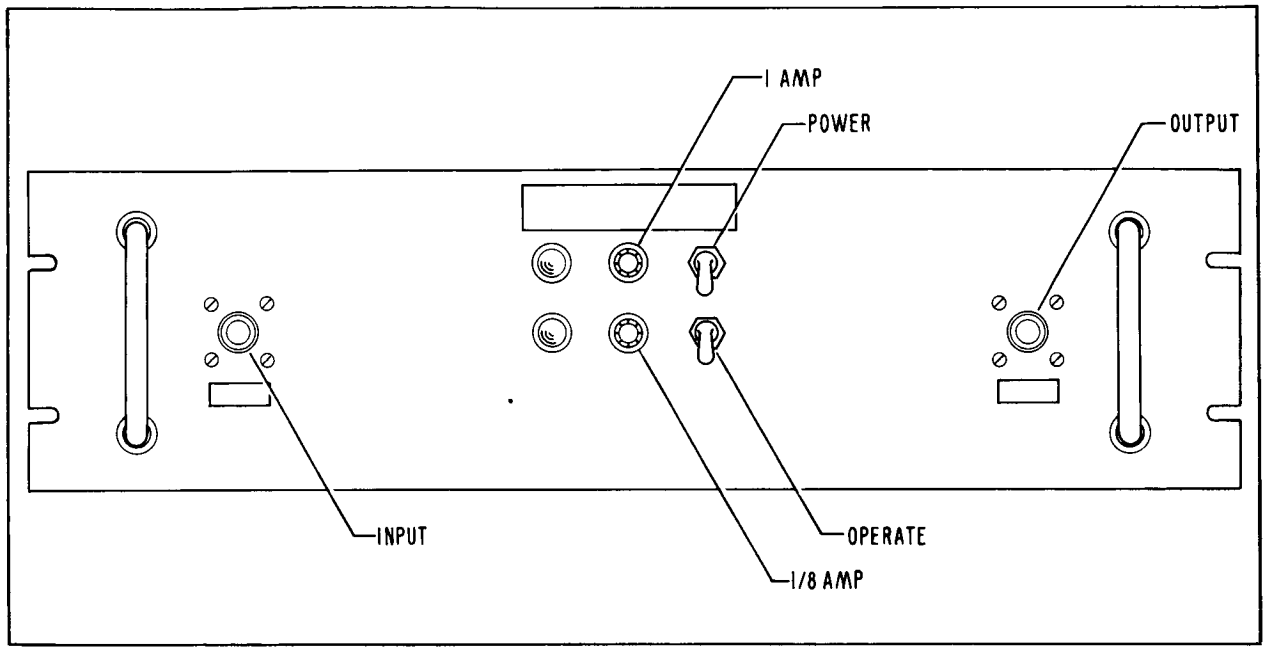

Figure 3-42. HF Voice Receiver Band Pass Filter (Ships)

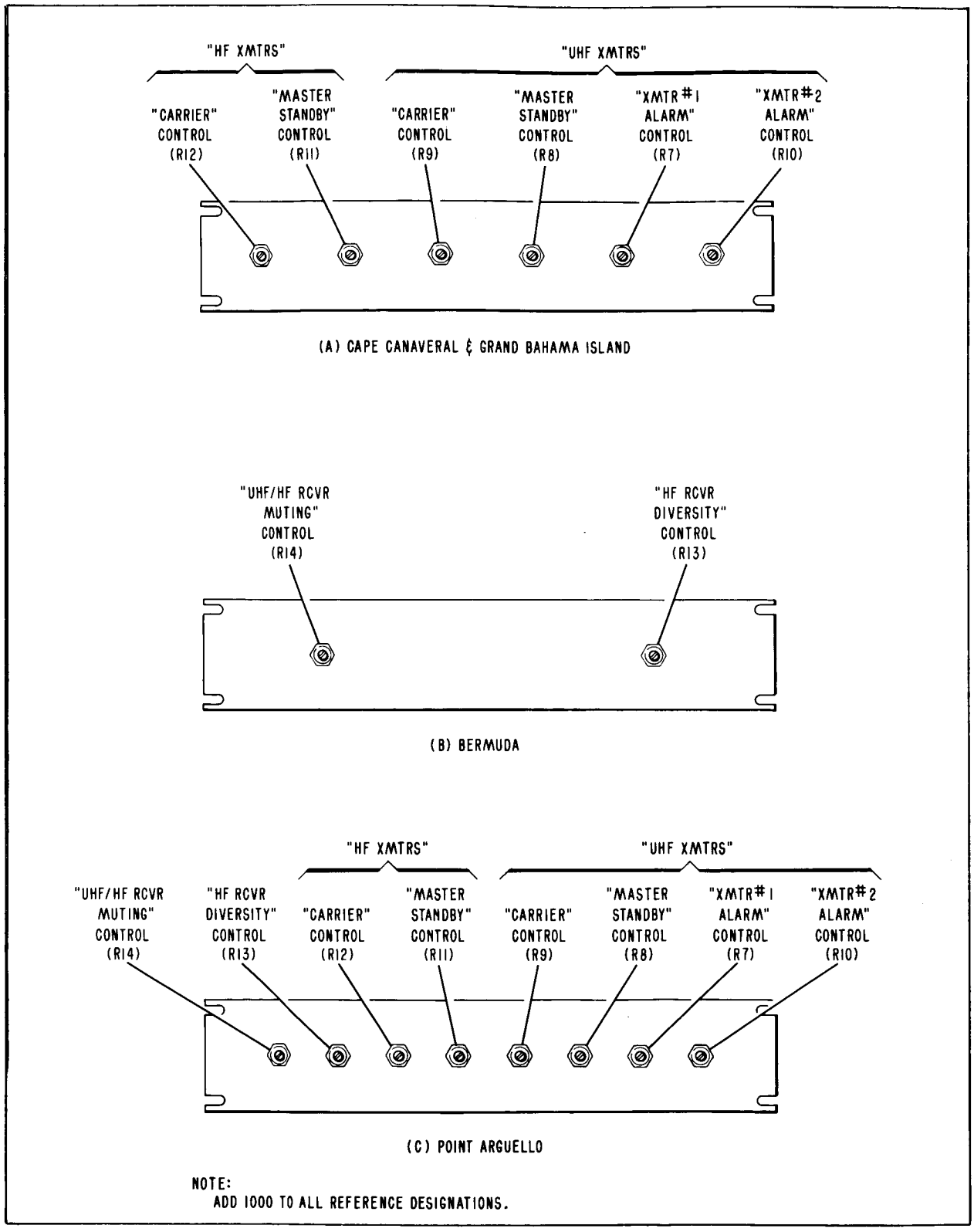

Figure 3-43. Control Relay Current Adjustment Panel

SECTION IV
THEORY OF OPERATION

4-1. GENERAL

A. DEGREE OF COVERAGE

This section contains the theory of operation for the capsule communication system and describes how the various components of the system function together. Detailed theory of operation for units such as the preamplifier, receivers, etc., are found in the instruction books pertaining to each unit. (See table 1-II.) However, complete circuit descriptions of the communication technician's console, the voice receiver rack, the UHF transmitter rack, and the HF monitor cabinet are presented in this section because separate instruction books do not exist for these units.

B. SYSTEM BREAKDOWN

The capsule communication system is considered to be divided into the UHF voice receiving system, the HF voice receiving system, the UHF voice transmitting system, and the HF voice transmitting system (see block diagrams, figures 4-1 and 4-2). The communication technician's console control circuitry, which deals with each of these, is considered separately. Insofar as the capsule communication system is concerned, all of the sites except Bermuda, Cape Canaveral, Grand Bahama Island, and Grand Turk Island are considered typical sites. The system theory of operation for the typical sites is presented first. Where applicable, this theory is followed by a discussion of the other four sites, pointing out the differences from the typical sites.

4-2. COMMUNICATION TECHNICIAN'S CONSOLE

A. GENERAL

(1). FUNCTION

(a). The communication technician's console is the control and monitoring point for the capsule communications system and, at command sites, for the command transmitting system. The command functions are described in detail in the Operation and Maintenance Manual, Command Control Transmitting System — MS-103.

The capsule communication system functions of the console at a typical site are shown in the block diagram, figure 4-3. Summarizing, the communication technician's console is the point at which the received signals from one or more of the various voice receivers is selected for application to the site intercommunication system and the point at which one or more transmitters is selected to transmit the audio from the intercommunication system to the capsule. The receiver control functions are shown, in general, on the left-hand side of the block diagram, and the transmitter control functions are shown on the right.

(b). Audio arrives at the communication technician's console (see figure 4-3) from the two UHF receivers, the diversity combiner, and the two HF receivers. Phone jacks are provided on the line level control panel (figure 3-26) for monitoring each of the inputs. Presence of a signal on either of the UHF input lines will cause the applicable "SIGNAL PRESENT" indicator on the UHF/HF receiver control panel (figure 3-22) to light; it will also cause the "UHF SIGNAL PRESENT" indicator on the transmitter-receiver system selector panel (figure 3-18) to light. In diversity operation, audio from the two UHF receivers is applied to the communication technician's console as well as to the diversity combiner. All three indicators mentioned above will light during the presence of a UHF voice signal even though a separate signal presence indicator is not included in the diversity combiner audio line. The above is not true in the case of audio from the HF receivers. When only one HF receiver is in use, the applicable "SIGNAL PRESENT" and "HF SIGNAL PRESENT" lamps will light, but in diversity reception, only the "SIGNAL PRESENT - RCVR NO. 1" and the "HF SIGNAL PRESENT" indicator will light. When operating in the diversity mode on HF, the audio from HF receiver No. 2 is not applied to the communication technician's console. The "SIGNAL PRESENT - RCVR NO. 2" indicator will, therefore, not light in diversity operation.

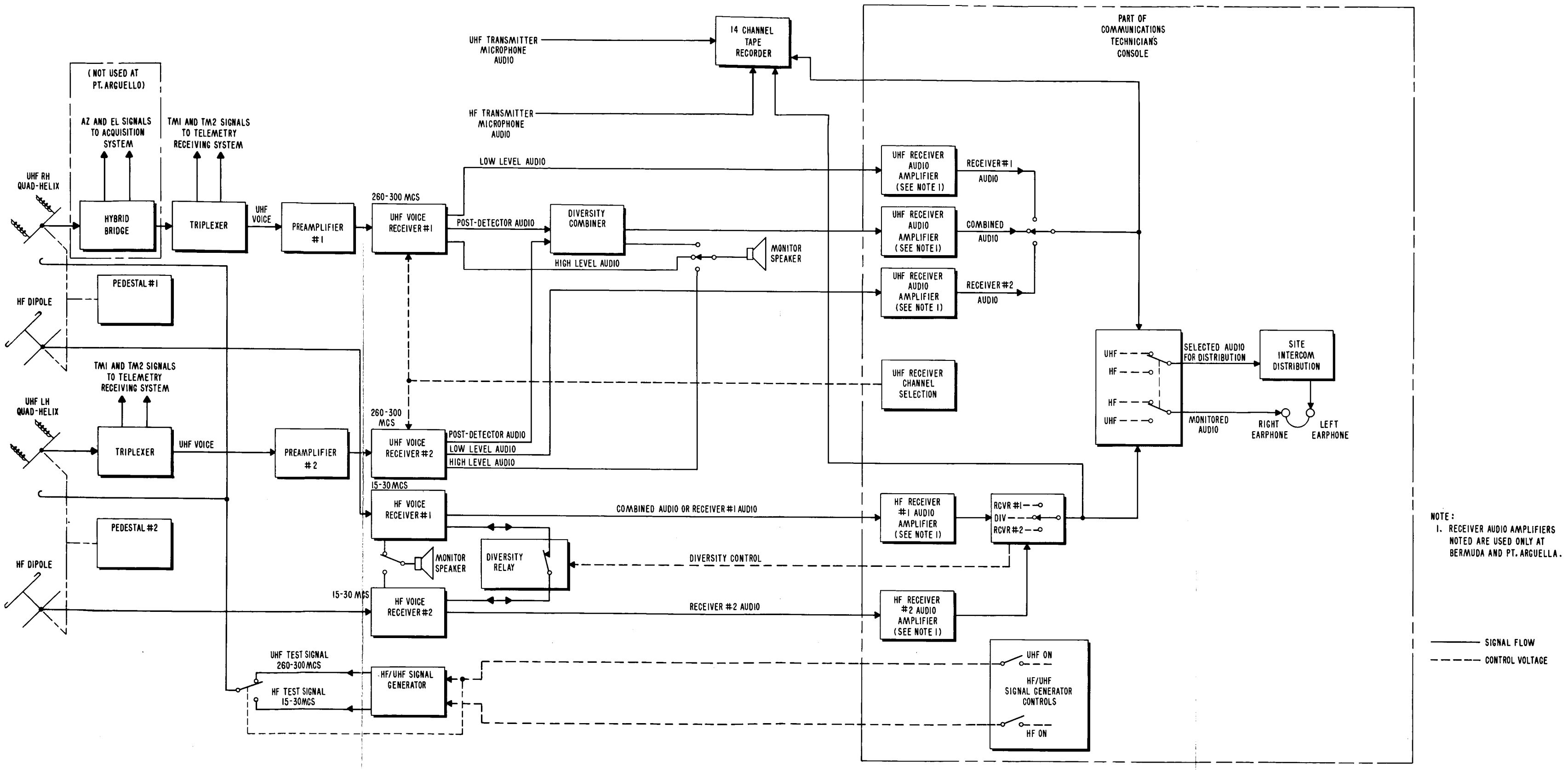

Figure 4-1. Voice Receiving System, Block Diagram

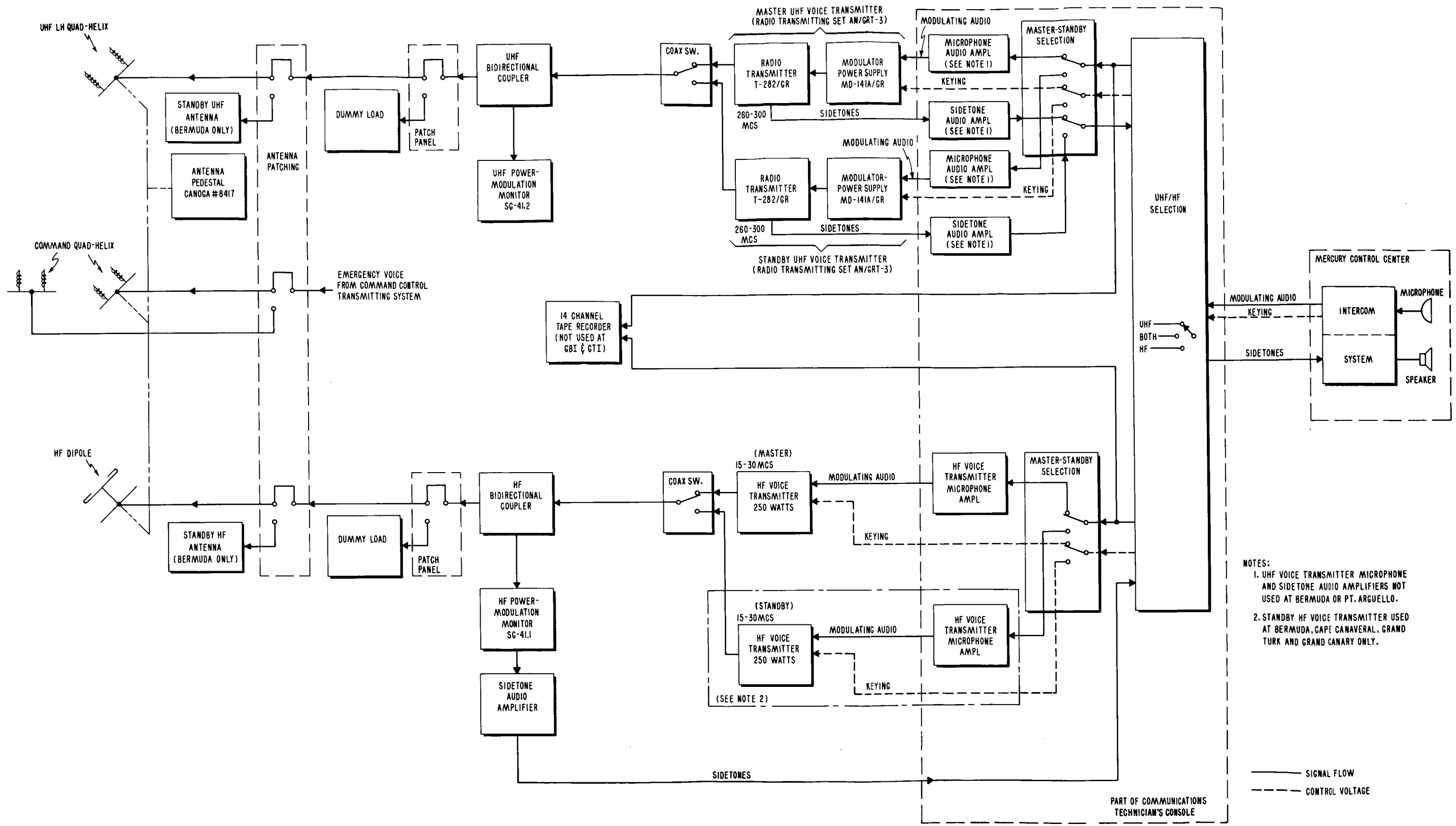

Figure 4-2. Voice Transmitting System, Block Diagram

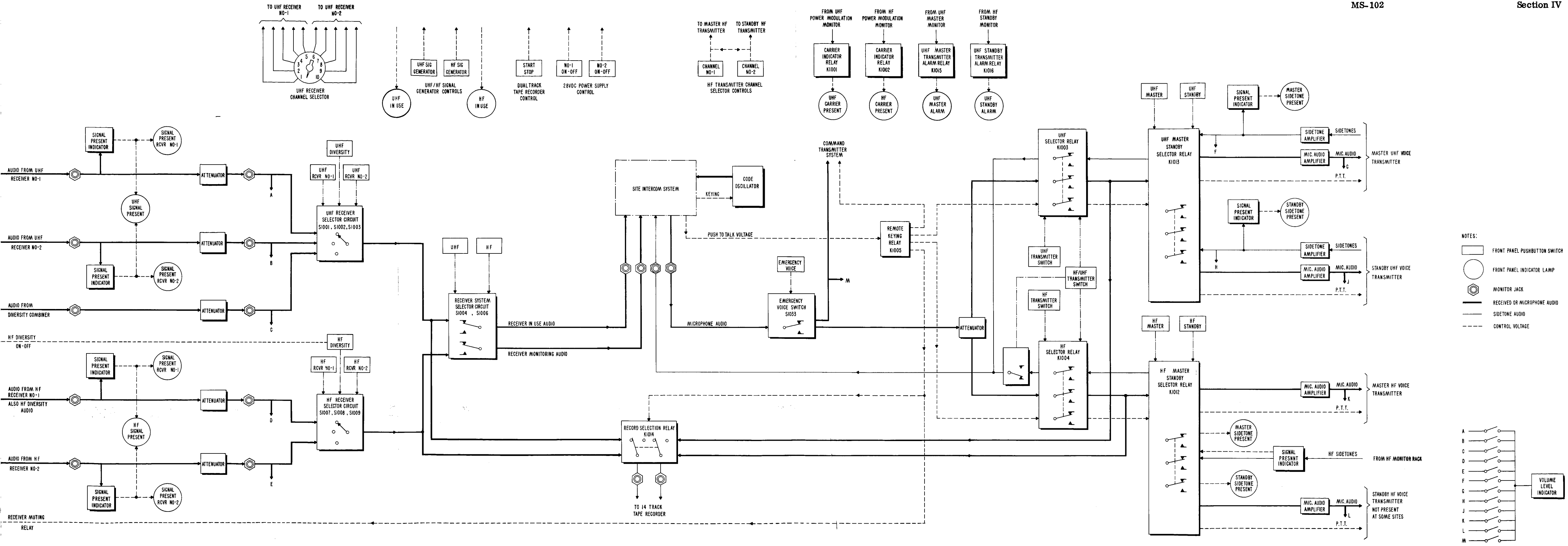

Figure 4-3. Communication Technician's Console, Block Diagram

(c). The incoming audio signals are passed through attenuators to reduce them to the required -10 dbm required at the input to the inter-communications system. At two sites, Bermuda and Point Arguello, where there is a high line loss between the receivers and the communication technician's console, audio amplifiers are used at this point instead of attenuators.

(d). Phone jacks are provided on the line level control panel for monitoring the output of the attenuators, and a sample of the output can be switched to the VU meter on the volume level indicator control panel (figure 3-25). The switching is accomplished by means of the push buttons on the auxiliary control panel (figure 3-24), and the VU meter can be used in conjunction with the attenuator adjustment potentiometers on the line level control panel to set the attenuators to the correct level. Monitoring jacks are not provided at these points at Bermuda or Point Arguello.

(e). The three UHF audio input lines lead into the UHF receiver selector circuit. This is a combination of three, interlocked, relay-type switches controlled by front-panel push buttons on the UHF/HF receiver control panel. These switches determine which of the audio lines will be connected to the intercommunications system when the UHF receiving system is being used. As in the case of the UHF audio input lines, the two HF audio input lines also lead to a set of switches which determine which of the HF receivers will be connected to the site intercom system.

(f). The two selected audios, determined by the UHF receiver selector circuit and the HF receiver selector circuit, are simultaneously applied to the receiver system selector circuit switches and the record selection relay. The receiver system selector circuit is made up of a pair of relay-type switches which are interlocked to function as one double-pole, double-throw switch. The push buttons controlling the switches are located on the transmitter-receiver system selector panel (figure 3-18). The position of the switches determine whether the HF or the UHF audio line will be

connected to the site intercom system for monitoring purposes. Record selection relay K1014 determines whether the 14-track tape recorder monitors the received signals or the microphone audio to the transmitters. In its normal (de-energized) position, this relay connects the recorder to the HF and UHF receiver audio circuits. When the microphone push-to-talk switch is closed, a voltage is applied to remote keying relay K1005 which closes and, in turn, applies a voltage to the coil of record selection relay K1014. This interrupts the circuit from the receivers to the tape recorder and closes the circuit between the tape recorder and the microphone audio lines. Phone jacks are provided on the line monitor jack panel (figure 3-19) to monitor the output to the 14-track tape recorder.

(g). Pressing the microphone push-to-talk switch simultaneously applies a voltage to the coil of remote keying relay K1005 and closes the microphone audio circuit to the HF and UHF selector relays. At the six command sites, the microphone audio first passes through the normally closed contacts of emergency voice switch S1033. This relay-type switch is controlled by the "EMER VOICE" push button on the command display panel (figure 3-30). Actuating the emergency voice switch interrupts the microphone audio line to the voice transmitters and transfers the microphone audio to the command transmitters. A closure is made in the keying circuit of the command transmitter through the remote keying relay K1005 when the system is in emergency voice status. The holding circuit of the emergency voice switch is broken and the switch becomes de-energized when the "HF TRANSMITTER" switch, the "UHF TRANSMITTER" switch, or the "HF/UHF TRANSMITTER" switch is pressed. The closing of remote keying relay K1005 serves three additional functions. It switches the 14-track tape recorder to the transmitting system, as previously noted, and supplies a voltage to close the receiver muting relay in the voice receiver rack. Also, it supplies a closure for the keying circuits of the voice transmitters.

(h). The transmitting system in use (HF, UHF, or simultaneous HF and UHF) is determined by selector relays K1003 and K1004,

which are controlled by push-button switches on the transmitter control panel (figure 3-23). When UHF selector relay K1003 is closed, microphone audio is applied to UHF master/standby selector relay K1013 and also through record selection relay K1014 to the 14-track tape recorder. Relay K1003 is controlled by "UHF MASTER" and "UHF STANDBY" switches on the transmitter control panel. Pressing the "UHF MASTER" switch de-energizes relay K1013 and applies the microphone audio from the "UHF" selector relay to a line amplifier and thence to the master UHF transmitter. At the same time, the push-to-talk circuit for the master UHF transmitter is completed through a second set of contacts of relay K1013, contacts of relay K1003, and remote keying relay K1005. Pressing the "UHF STANDBY" switch breaks these two circuits but completes similar circuits to the standby UHF transmitter. The output level of the microphone audio for either transmitter can be checked on the VU meter of the volume level indicator control panel (figure 3-25) by pressing the applicable switches on the auxiliary control panel (figure 3-24).

(i). Pressing the "HF TRANSMITTER" switch on the transmitter control panel de-energizes UHF selector relay K1003 and energizes HF selector relay K1004. This completes the microphone audio and push-to-talk circuits of the HF voice transmitter. These circuits are completed through the normally closed contacts of HF master/standby relay K1012. This relay is inoperative at all sites except those three that are supplied with a standby HF voice transmitter. At those sites the relay transfers the microphone audio and push-to-talk functions to the standby transmitter. The closing of HF selector relay K1004 also applies microphone audio to the 14-track tape recorder through record selection relay K1014.

(j). When the "HF/UHF TRANSMITTER" switch is pressed, selector relays K1003 and K1004 close and complete the microphone audio circuits and push-to-talk circuits for the in-use transmitters of both frequencies. The function of the UHF master/standby selector relay and the HF master/standby selector relays is not changed.

(k). The signal path of the sidetone circuits is essentially the reverse of the microphone audio path. When the UHF selector relay K1003 and UHF master/standby relay K1013 are set so that the microphone audio circuit to the UHF master transmitter is complete, sidetones are fed back from the UHF master transmitter through separate sets of contacts in these same relays to the site intercom system. The same is true when the relays are set up for UHF standby transmitter operation. In the case of HF operation, the sidetones are taken from the power modulation monitor in the HF monitor rack rather than from the transmitter itself. Since one power modulation monitor serves both HF transmitters, a single sidetone input to the communication technician's console is sufficient. When simultaneous HF and UHF transmission is used, the sidetones from the UHF transmitter are used. The sidetone circuit from the HF transmitter is opened by a set of contacts on the "HF/UHF TRANSMITTER" switch when this switch is pressed.

(l). Separate sidetone amplifiers and signal present indicator units are provided for each of the UHF transmitter sidetone inputs. The signal present indicators control the applicable sidetone-present indicator lamps on the transmitter control panel. A single signal present indicator is used with the HF transmitter sidetone input. It causes either the master or the standby sidetone present indicator lamp to light depending on the position of the HF master/standby selector relay K1012.

(m). Various independent functions can be performed remotely at the communication technician's console. These are represented by the diagrams at the top of figure 4-3. The UHF receivers can be tuned to any one of ten preselected frequencies by means of the "UHF RCVR CHAN SEL" switch on the transmitter-receiver system selector panel (figure 3-18). This switch controls the motor-driven channel selection system in each UHF voice receiver. The channel selection system is described in detail in Handbook, Service Instructions, Radio Receiver, R-278B/GR.

(n). The UHF/HF signal generator, in the voice receiver rack, can be turned on or off by means of the "UHF SIG GEN" and "HF SIG GEN" switches on the auxiliary control panel (figure 3-24). These switches are simple double-pole, double-throw switches; they are not relay type. Pressing either button once turns the signal generator on; pressing it a second time turns it off. The "UHF IN USE" and "HF IN USE" indicator lamps light when the signal generator has been turned on locally at the voice receiver rack. The remote switches cannot override the local control.

(o). The dual track tape recorder, in the voice receiver rack, can be started or stopped by means of the "START-STOP" switch on the site intercommunications panel (figure 3-27). This is a double-pole, double-throw, non-relay type switch which completes the AC circuit to the recorder motor.

(p). The "#1 ON-OFF" and "#2 ON-OFF" switches on the auxiliary control panel control the AC power to the two 28-volt power supplies in the bottom of the communication technician's console.

(q). The "CHANNEL 1" and "CHANNEL 2" switches on the UHF/HF transmitter control panel (figure 3-23) are used to select the operating channel for the HF voice transmitter. At sites containing a standby HF voice transmitter, the switches control the channel selection of both transmitters simultaneously.

(r). Carrier Present indicator lamps on the transmitter-receiver system selector panel (figure 3-18) light to show the presence of carriers at the HF and UHF transmitters. The carrier present indicators operate from voltages taken from the power modulation monitors. Alarm indicator lamps are located on the UHF/HF transmitter control panel (figure 3-23) to indicate a loss of filament or bias voltage in the UHF master and standby transmitters.

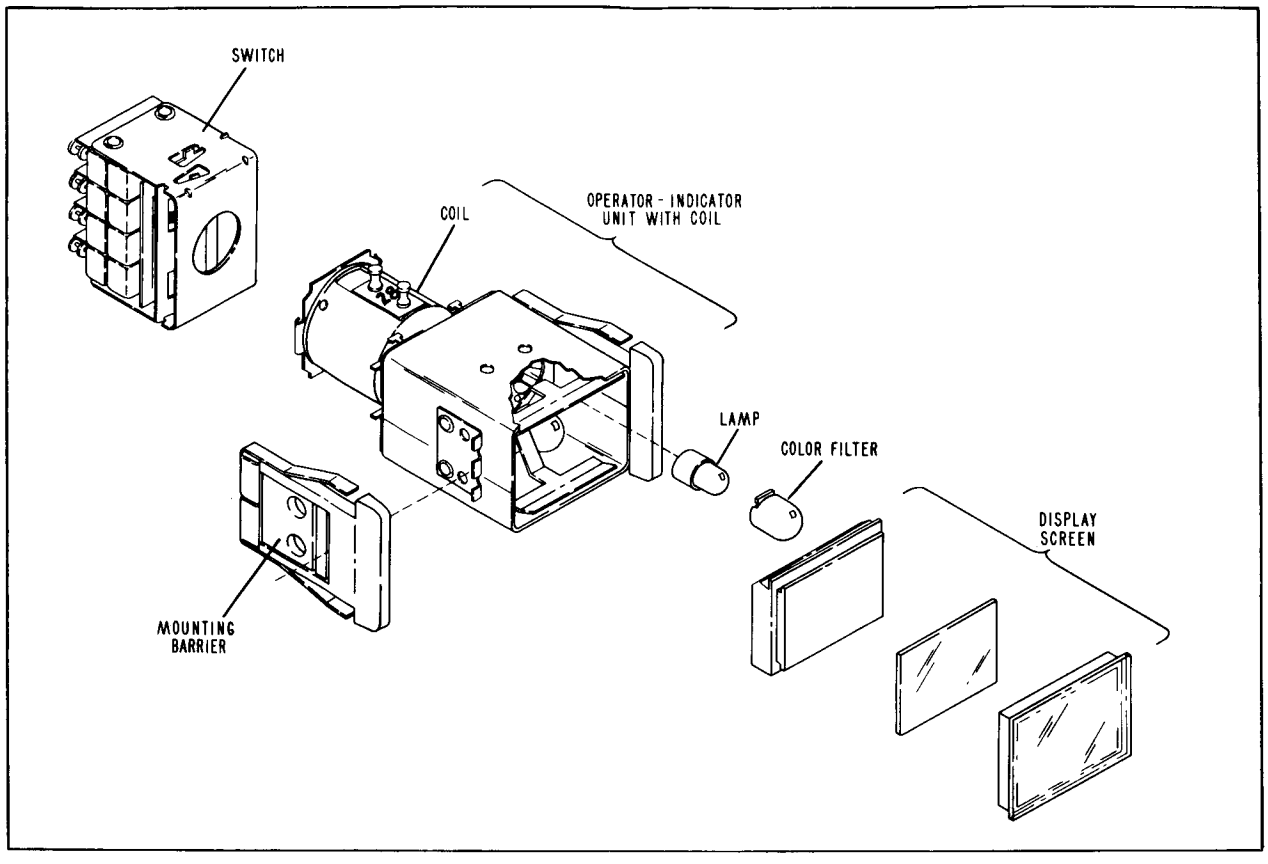

Figure 4-4. Relay-Switch Assembly, Exploded View

(2). SWITCHES

The majority of the switch assemblies used on the console are relay-type, indicator switches. (See figure 4-4.) The switch assembly consists of two main detachable sections: the switch, and the operator-indicator unit with coil. The switch has up to four single-pole, double-throw sections. All of the switch sections are actuated simultaneously by a plunger in the operator-indicator unit. This unit has two, main, non-detachable sections: the coil and the indicator. When energized, the coil holds the plunger in its actuated position. The indicator has four lamp sockets and a three-piece display screen. In most instances only two lamp sockets are used. The lamps are white; so the colored lighting of the indicator is obtained by the use of filters which fit over the lamps. The display screen snaps into the end of the indicator plunger when the indicator is assembled, so that the plunger is moved and the switch actuated by depressing the display screen.

B. HF/UHF VOICE RECEIVING SYSTEM SELECTION CIRCUIT

(1). Selection of either HF or UHF reception is made at the transmitter-receiver system selector panel (figure 3-18) on the communication technician's console by depressing switch S1006 (HF) or S1004 (UHF). Figure 4-5 shows a simplified schematic diagram of the circuit. Relay type switch S1006 is shown energized; so audio from the HF receiving system is applied to the receiver-in-use terminals of TB1010. Switch S1004 is unenergized; so audio from the UHF receiving system is applied to the receiver monitoring terminals of TB1010.

(2). The holding circuit of S1006 is shown by the heavy line. Depressing relay-type switch S1004 will break this holding circuit and simultaneously close a holding circuit to keep S1004 energized. This reverses destinations of the outputs of the two receiving systems, connecting the HF audio to the monitoring circuits and the UHF audio to the in-use circuits.

C. UHF VOICE RECEIVER REMOTE SELECTION CIRCUIT

(1). At a typical site, UHF voice audio is available at the communication technician's console from three sources: UHF receiver No. 1, UHF receiver No. 2, and the UHF diversity combiner. Selection of one of these for system use or monitoring is made by depressing the applicable UHF receiver control switch on the UHF/HF receiver control panel. (See figure 3-22.)

(2). These three switches (S1001, S1002, and S1003) are relay-type switches, electrically interlocked so that depressing any one of the three will break the holding circuit of the switch previously in use. The circuit is shown by a simplified schematic in figure 4-6.

(3). Switch S1003 is shown as energized in the diagram; the +28 VDC holding circuit keeping it energized is shown by the heavy line. In this condition, audio at pin 6 and 7 of TB1001 from the UHF receiver No. 1 is applied through contacts C and D of S1003 to UHF voice receiver switch S1004.

(4). The indicator lamps in parallel with the relay coil (for simplicity, only one lamp is shown) are a physical part of S1003. They light whenever the relay coil is energized.

(5). Depressing either S1001 or S1002 breaks the holding circuit of S1003 at contact B of the switch pressed and sets up a new holding circuit. The holding

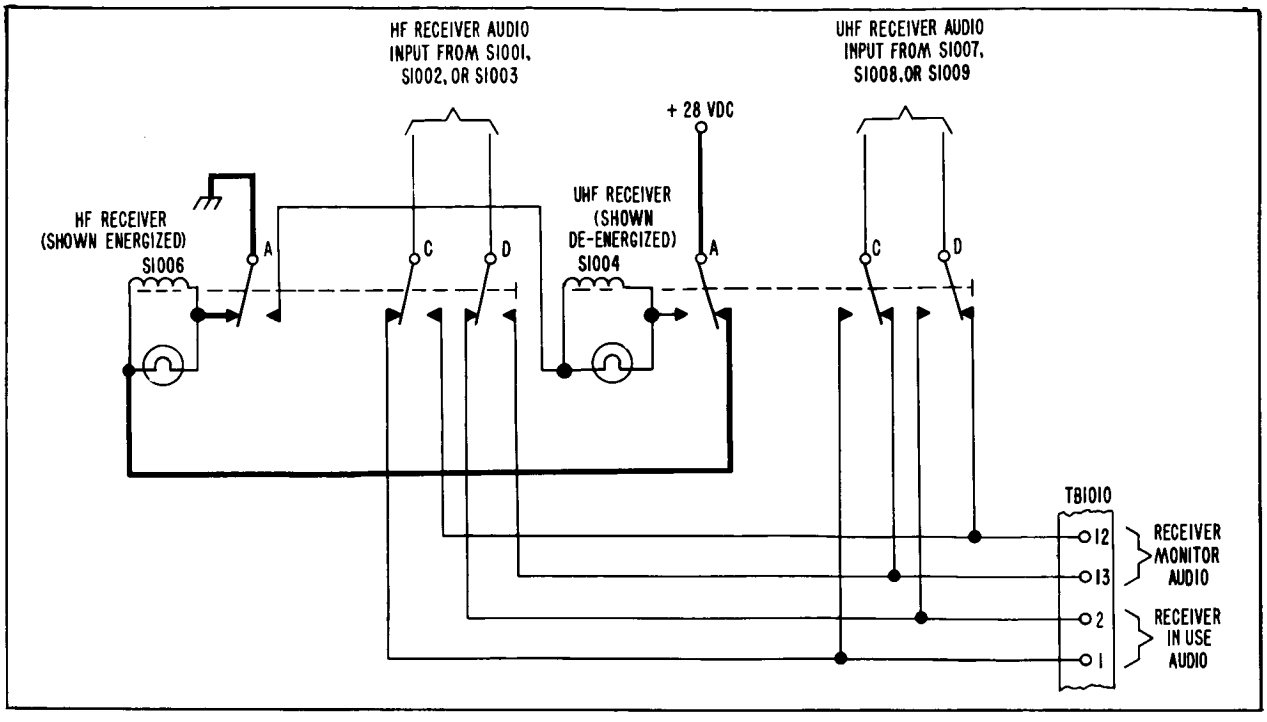

Figure 4-5. HF/UHF Voice Receiving System Selector Circuit

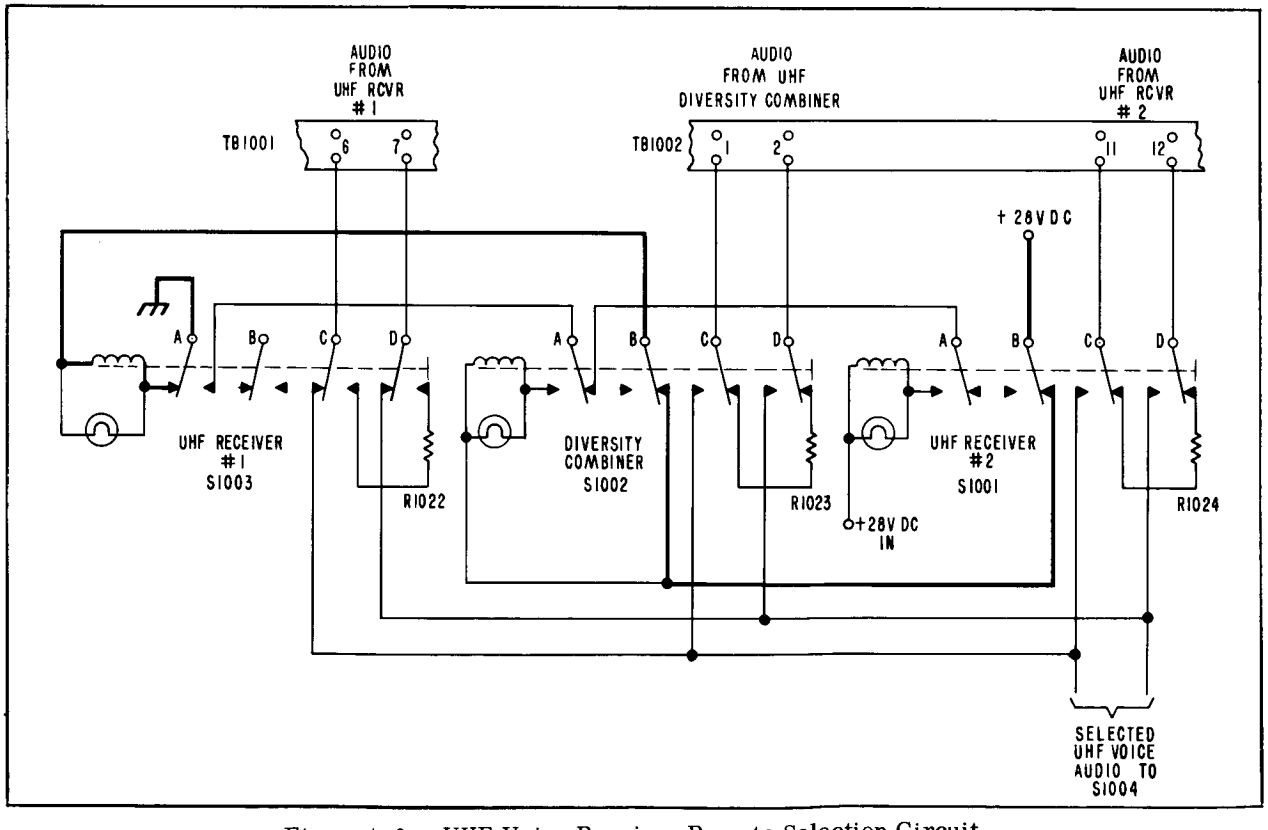

Figure 4-6. UHF Voice Receiver Remote Selection Circuit

circuit for S1002 is from the +28-volt input, through contact B of S1001 (unenergized), the relay coil and contact A of S1002, and contact A of switch S1003, to ground. The holding circuit for S1001 is from the +28 VDC supply, through the coil and contact A of S1001, contact A of S1002, and contact A of S1003, to ground.

(6). Contacts C and D of each switch connect the balanced-pair lines of the selected audio to S1004. Resistors R1022, R1023, and R1024 are line load resistors used to terminate the two pairs of lines not in use at any given time.

Note

At Cape Canaveral, the UHF diversity combiner switch is deleted, and a UHF receiver No. 3 switch is added. In figure 4-6, switch S1001 becomes UHF receiver No. 3, switch S1002 becomes UHF receiver No. 2, and switch S1003 remains UHF receiver No. 1. The electrical operation of these switches is the same as that just discussed for a typical site. At Grand Bahama Island and Grand Turk Island the UHF diversity combiner is not used. Therefore, in figure 4-6 the diversity combiner switch S1002 is deleted. Switches S1001 and S1003 remain the same as shown, and the operation of the switch holding circuit is the same as that just discussed for a typical site except there are now only two switches involved instead of three.

D. HF VOICE RECEIVER REMOTE SELECTION CIRCUIT

(1). At a typical site, the HF receiver control circuit is similar, electrically and functionally, to the UHF voice receiver control circuit. Switches S1007, S1008, and S1009 are used to select receiver audio from HF voice receiver No. 1 or HF voice receiver No. 2, or HF diversity audio from HF voice receiver No. 1. The switches are interlocked so that energizing one switch will release either previously energized switch.

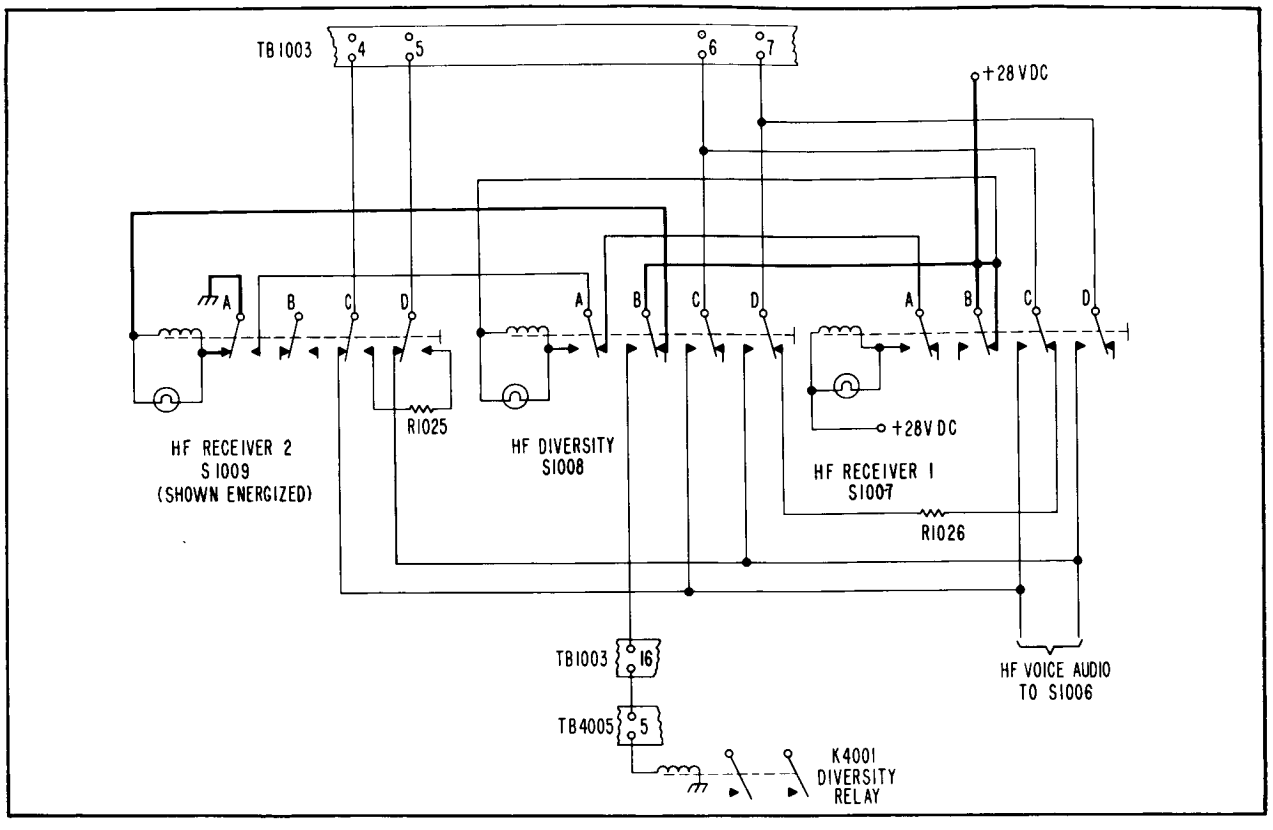

Figure 4-7. HF Voice Receiver Remote Selection Circuit

(2). Figure 4-7 shows a simplified schematic diagram of the switching circuit. Switch S1009 is shown as energized. Its holding circuit through S1008 and S1007 is shown by the heavy line. The indicator lamps paralleling each switch relay coil are a part of that switch. The lamps light when the associated coil is energized.

(3). When S1008 is energized in the selection of diversity operation, +28 VDC is applied through contact B to pin 16 of TB1003 and to the coil of diversity relay K4001 in the voice receiver rack. HF diversity audio is brought into the communication technician's console on the same balanced-pair lines used to bring in audio from the HF receiver No. 1.

(4). Resistors R1025 and R1026 are line load resistors. R1025 is used to terminate the balanced-pair lines from receiver No. 2 when receiver No. 1 or the diversity mode is used. R1026 is used to terminate the lines from receiver No. 1 when receiver No. 2 is in use.

Note

The Grand Bahama Island and Grand Turk Island sites do not contain HF diversity features and, therefore, the HF diversity switch S1008 is deleted. Switches S1007 and S1009 remain the same as shown in figure 4-7. The operation of the switch holding circuits is the same as that just discussed for a typical site except there are only two switches involved instead of three.

E. VOICE RECEIVER MUTING

(1). To prevent damage to the receivers and to prevent audio feedback, all voice system receivers are muted whenever the HF or UHF voice transmitters are keyed. This is accomplished by energizing the muting relay in the UHF voice receivers and energizing the break-in relay in the HF voice receivers.

(2). As shown in figure 4-8, actuation of the "push-to-talk" switch completes the ground path through terminal 11 of terminal board TB1010 for the "REMOTE KEYING" relay K1005. When relay K1005 is energized, 28 volts DC is fed through contacts 7 and 8 of relay K1005 to the energizing coil of "RECORDER-SELECT" relay K1014. This energizes relay K1014 so that the modulating audio of the transmitter will be applied to the capsule voice tape recorder. Also, when relay K1005 is energized, the 28-volt DC path for "MUTING" relay K4002 is completed through terminal 7 of terminal board TB4005, terminal 10 of terminal board TB1001, and contacts 4 and 5 of relay K1005. The ground path for "MUTING" relay K4002 is through terminal 8 of terminal board TB4005 and terminal 9 of terminal board TB1001. At Bermuda and Point Arguello, the receiving equipment is located remotely from the communication technician's console. Since "MUTING" relay K4002 is located at the receiving equipment, a 65-volt DC power supply is used to energize relay K4002 at these sites instead of 28 volts DC to compensate for the line loss.

(3). When "MUTING" relay K4002 is energized, a ground path for the muting relay or the break-in relay of each voice receiver is completed. The ground path for "MUTING" relay K802 of the UHF voice receiver No. 2 is through pin M of

jack J1214 to terminal 28 of the distribution panel and through contacts 10 and 11 of relay K4002. The ground path for MUTING relay K802 of the UHF voice receiver No. 1 is through pin M of jack J1214 to terminal 8 of the distribution panel and through contacts 13 and 14 of relay K4002. The ground path for "BREAK IN" relay K601 of the HF voice receiver is through pin 1 of jack J619, through contacts 2 and 3 of "BREAK IN" switch S103 to terminal 9 of terminal board TB103 and then through contacts 4 and 5 of relay K4002 for the No. 2 receiver and through contacts 19 and 20 of relay K4002 for the No. 1 receiver.

(4). Also, when "REMOTE KEYING" relay K1005 is energized, a closure path for "MUTING" relay K802 in the UHF voice receiver No. 3 (located in the TEL 2 building at Cape Canaveral) is completed. This path is through pin K of plug P1025 to terminal 9 of the distribution panel and then to terminal 16 of terminal board TB1002 at the communication technician's console. The path is then completed through contacts 4 and 5 of relay K1005 to terminal 15 of terminal board TB1002, to terminal 8 of the distribution panel through pin M of plug P1025 and then back to the muting relay in the receiver.

F. SIGNAL GENERATOR REMOTE CONTROLS

(1). The signal generator in the voice receiver rack can be controlled remotely by the "UHF SIG GEN" switch, S1012, and "HF SIG GEN" switch, S1013, on the auxiliary control panel (figure 3-24) of the communication technician's console. These switches are DPDT, mechanical-hold switches rather than relay types. Pressing a switch once throws the switch in one direction; pressing it a second time throws it in the other. Figure 4-9 shows the switching circuit and its effect on the HF-UHF relays in the signal generator.

(2). The circuit shows the HF signal generator in use through the closing of S1013. A ground path is thereby completed for the 150-volt circuit through the coil of HF relay K4502 (shown energized) in the signal generator. Under these conditions, the UHF relay K4501 cannot be energized, either locally or remotely, because its ground return path is broken while K4502 is energized.

Switching the local control switch S4501 to UHF causes "UHF IN USE" lamp on the console to light, but has no effect on the HF mode of operation of the signal generator. Pressing the remote "UHF SIG GEN" switch, S1012, breaks the ground return path of relay K4502. This relay becomes de-energized halting HF

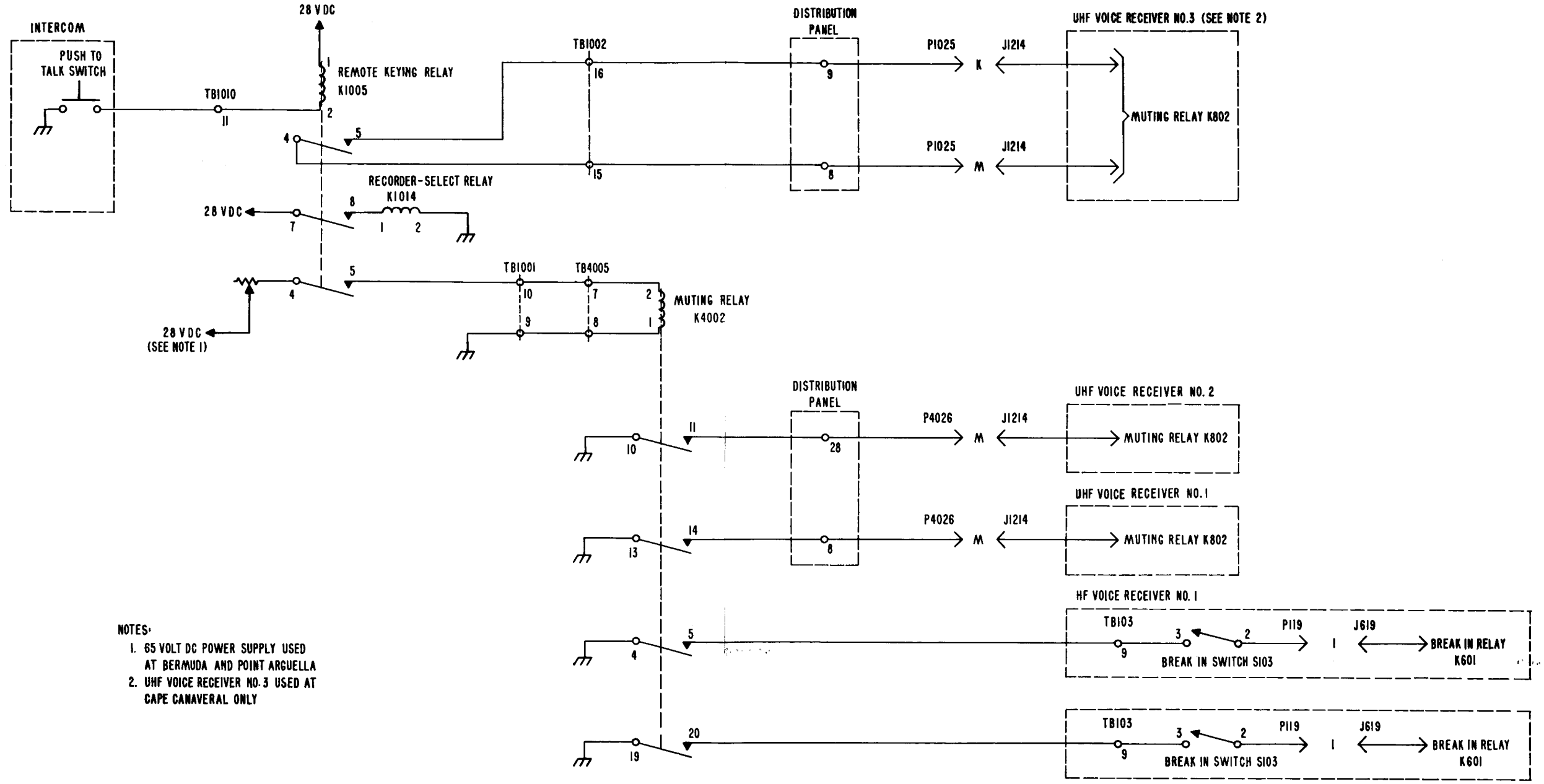

NOTES:
1. 65 VOLT DC POWER SUPPLY USED AT BERMUDA AND POINT ARGUELLA
2. UHF VOICE RECEIVER NO. 3 USED AT CAPE CANAVERAL ONLY

Figure 4-8. Voice Receiver Muting Circuit

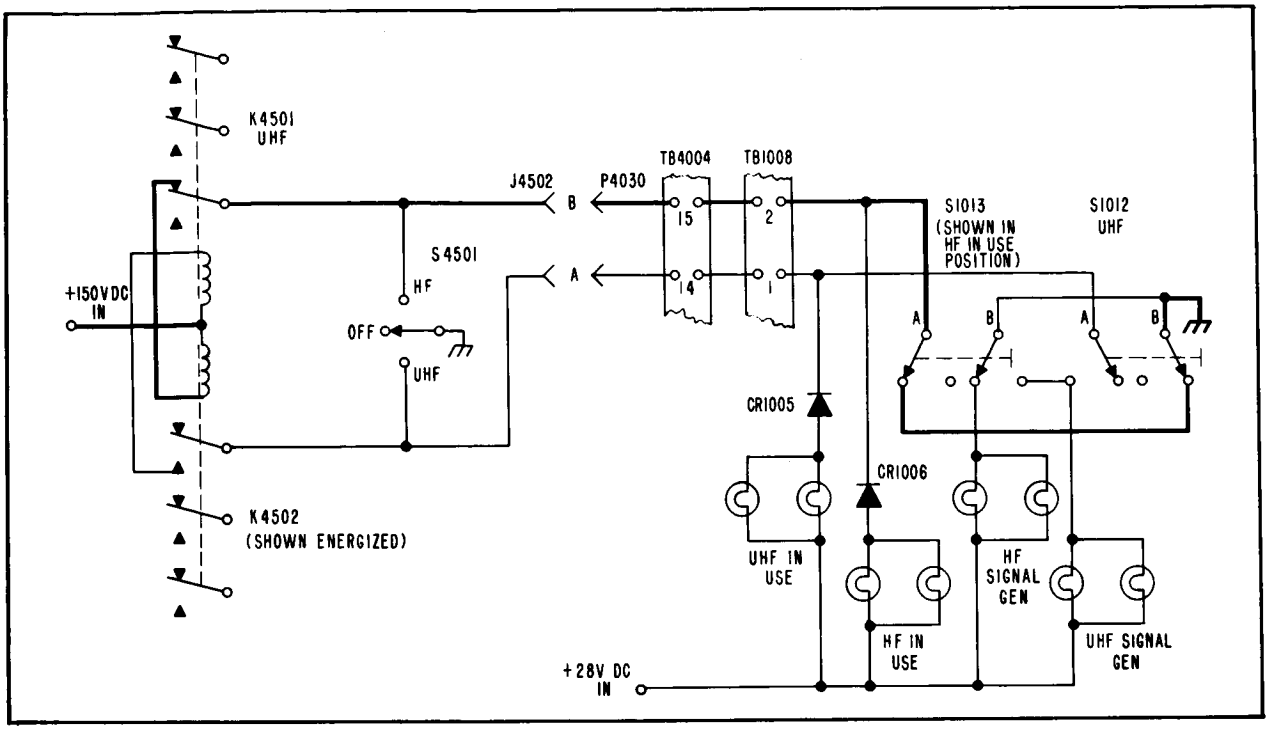

Figure 4-9. HF/UHF Signal Generator Remote Control Circuit

oscillations, but UHF relay K4501 is prevented from becoming energized by the position of contact B of switch S1013. The "HF IN USE" lamp will go out.

(3). Similarly, when the local control switch, S4501, is in the "HF" or "UHF" position, the remote controls have no effect upon relay operation. While S4501 is in the "HF" position, "HF IN USE" lamp is lit. Pressing remote "UHF SIG GEN" switch causes "UHF IN USE" lamp to light also, but does not stop HF operation of the signal generator.

(4). Diodes CR1005 and CR1006 isolate the +150-VDC, relay-controlled circuit from the +28 VDC indicator lamp circuit.

Note

At Cape Canaveral, the "HF IN USE" and "UHF IN USE" lamps are replaced by "TEL 2 IN USE" and "TEL 3 IN USE" lamps. The operation of switches S1012 and S1013 is the same as that just discussed for a typical site. However, when "UHF SIG GEN" switch S1012 is

illuminated, both "TEL 2 IN USE" and "TEL 3 IN USE" lamps are illuminated. When "HF SIG GEN" switch S1013 is illuminated, only the "TEL 3 IN USE" lamp is illuminated.

G. VOICE TRANSMITTER SELECTION CIRCUITS

(1). At sites other than command sites the selection of HF transmission, UHF transmission or both HF and UHF transmission is made by pressing the appropriate switch (S1015, S1016, or S1017) on the Transmitter-Receiving System Selection Panel. (See figure 3-18.) For command sites note that the transmission selection differs. All of the selector switches are the relay-type switches and are electrically interlocked so that actuating one switch releases either of the other two.

(2). A schematic diagram of the switching circuit is shown in figure 4-10. Selection of a transmitting system is made by providing a ground return path for the +28-volt circuit through relay K1003 or K1004. The circuit is drawn to show switch S1015 energized. In this condition, both K1003 and K1004 are energized, and both transmitting systems are in use.

Note

At non-command sites, "EMERGENCY VOICE" switch S1033, shown in figure 4-10, is not used. Terminal A of "HF XMTR" switch S1017 is, therefore, connected directly to ground.

(3). The heavy line shows the 28-volt holding circuit keeping S1015 energized. Relays K1003 and K1004 are grounded through contact C of unenergized switches S1017 and S1016 and contact A of energized switch S1015.

(4). Depressing switch S1017 breaks the holding circuit of S1015 and de-energizes K1003 and K1004 by opening the ground return paths at contact A. A holding circuit to keep switch S1017 energized is set up instead through contact B of S1015 (de-energized), contact B of S1016 (de-energized), contact B, the coil, and contact A of S1017 (energized), to ground. K1004 is, therefore, immediately reenergized through the completion of the ground return path through contacts C and A of S1017 (energized). The HF transmitter remains available for system use; the UHF transmitter is removed from the circuit.

(5). Depressing switch S1016 similarly breaks the holding circuit of either of the other two switches, sets up a holding circuit of its own, removes the HF transmitter from the circuit, and makes the UHF transmitter available for system use.

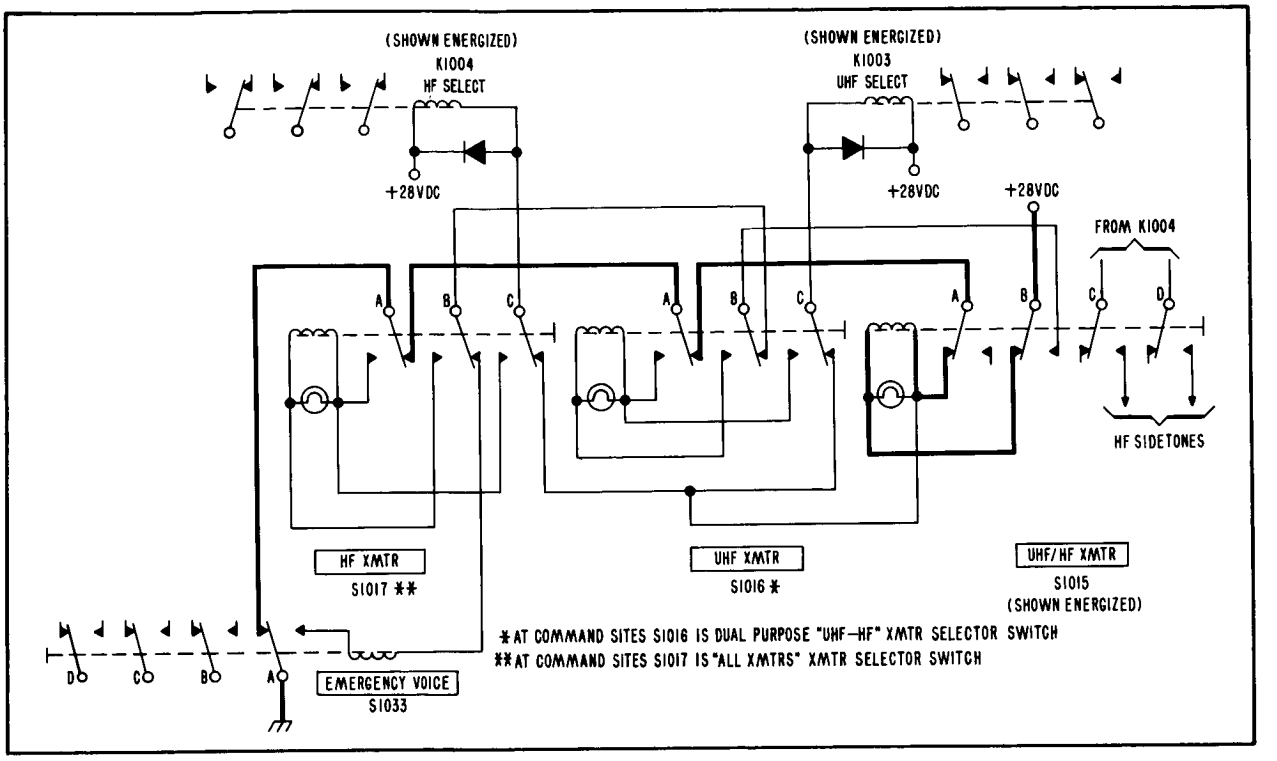

Figure 4-10. HF/UHF Voice Transmitter System Selector Circuit

(6). "EMERGENCY VOICE" switch S1033, used at command sites only, is a relay-type switch located on the command display panel (figure 3-30) of the communication technician's console. The ground return paths for switches S1015, S1016, and S1017 and relays K1003 and K1004 are through contact A of this switch. Depressing "EMERGENCY VOICE" switch, therefore, de-energizes all of these switches and relays and makes voice transmission over the command transmitter possible. Conversely, actuating switch S1015, S1016, or S1017 breaks the holding circuit of S1033 and permits resumption of normal voice transmission over the HF or UHF voice transmitters.

(7). See sheet 2 of any of the command site schematic diagrams for circuit details of the transmitter system. The command sites transmitter selector panel, see figure 3-18, allows the choice of UHF, HF, UHF/HF or all transmitters as shown. The emergency voice transmitter may still be chosen separately or along with the other two transmitters.

H. UHF VOICE TRANSMITTER, MASTER/STANDBY SELECTION CIRCUIT

(1). The UHF transmitter in use (master or standby) is determined by the position of relay K1013. When it is unenergized, the push-to-talk and microphone

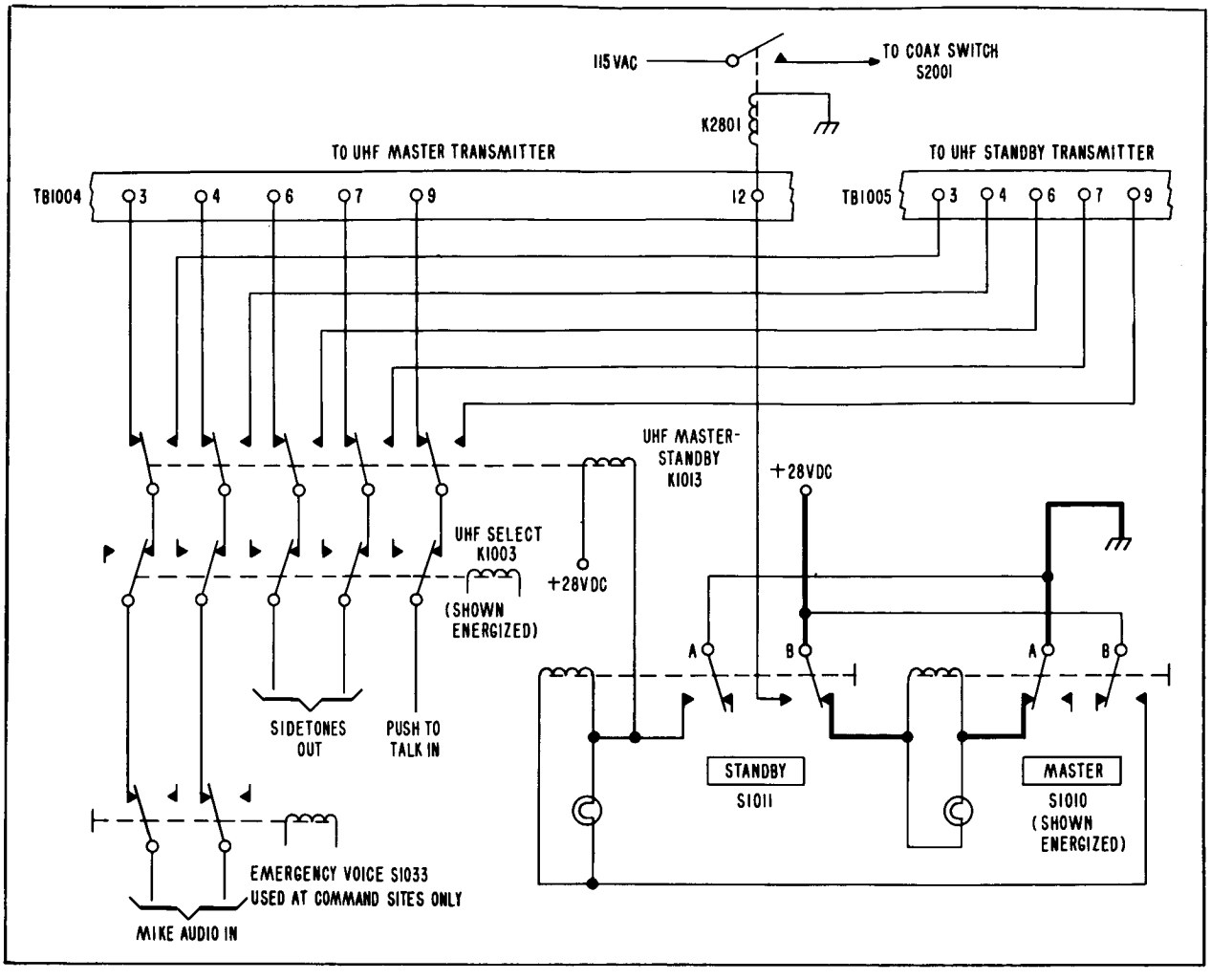

Figure 4-11. UHF Voice Transmitter Remote Selection Circuit

audio circuits are connected to the master UHF transmitter, and the sidetones circuit of the master UHF transmitter is connected to the system intercom. When K1013 is energized, these functions are transferred to the standby UHF transmitter.

(2). Switches S1010 and S1011, which control relay K1013, are relay-type switches, electrically interlocked so that actuating one releases the other. (See figure 4-11.) Switch S1010 is shown energized in the figure; its holding circuit is shown by the heavy line. The ground return path of relay K1013 is open at contact A of S1011; so K1013 is unenergized, and the master UHF transmitter is operational.

(3). Pressing switch S1011 breaks the holding circuit of S1010 and completes the ground return path of K1013, energizing this relay. The transmitting

functions are now transferred to the standby UHF transmitter. In addition, +28 volts is applied through contact B of S1011 and TB1004-12 to energize relay K2801 on the UHF switching unit in the UHF transmitter rack. Energizing K2801 applies 115 VAC to coaxial switch S2001, which connects the standby UHF transmitter to the antenna.

I. HF VOICE TRANSMITTER, MASTER/STANDBY SELECTION CIRCUIT

(1). Three sites (Cape Canaveral, Grand Turk Island, and Bermuda) have a standby HF voice transmitter. The remainder of the sites are wired to accept a standby HF voice transmitter, but this circuitry is not used.

(2). The HF transmitter in use (master or standby) is determined by the position of relay K1012. When it is unenergized, the push-to-talk and microphone audio circuits are connected to the master HF transmitter and the sidetones circuit of the master HF transmitter is connected to the system intercom. When K1012 is energized, these functions are transferred to the standby HF transmitter.

(3). Switches S1019 and S1020, which control relay K1012, are relay-type switches, electrically interlocked so that actuating one releases the other. (See figure 4-12.) Switch S1019 is shown energized in the figure; its holding circuit is shown by the heavy line. The ground return path of relay K1012 is open at contact B of S1020; so K1012 is unenergized, and the master HF transmitter is operational.

(4). Pressing switch S1020 breaks the holding circuit of S1019 and completes the ground return path of K1012, energizing this relay. The transmitting functions are now transferred to the standby HF transmitter. In addition, +28 volts is applied through the contacts of K1012 and TB1007-6 to energize relay K3001 on the HF switching unit in the HF transmitter rack. Energizing K3001 applies 115 VAC to coaxial switch S3001 which connects the standby HF transmitter to the antenna.

J. SIGNAL PRESENCE INDICATOR

(1). GENERAL

The purpose of the signal presence indicator is to detect the presence of an audio signal at the communication technician's console and to cause an indicator lamp associated with this signal to light. Seven of these units are provided in the console, one for each of the following audio signals:

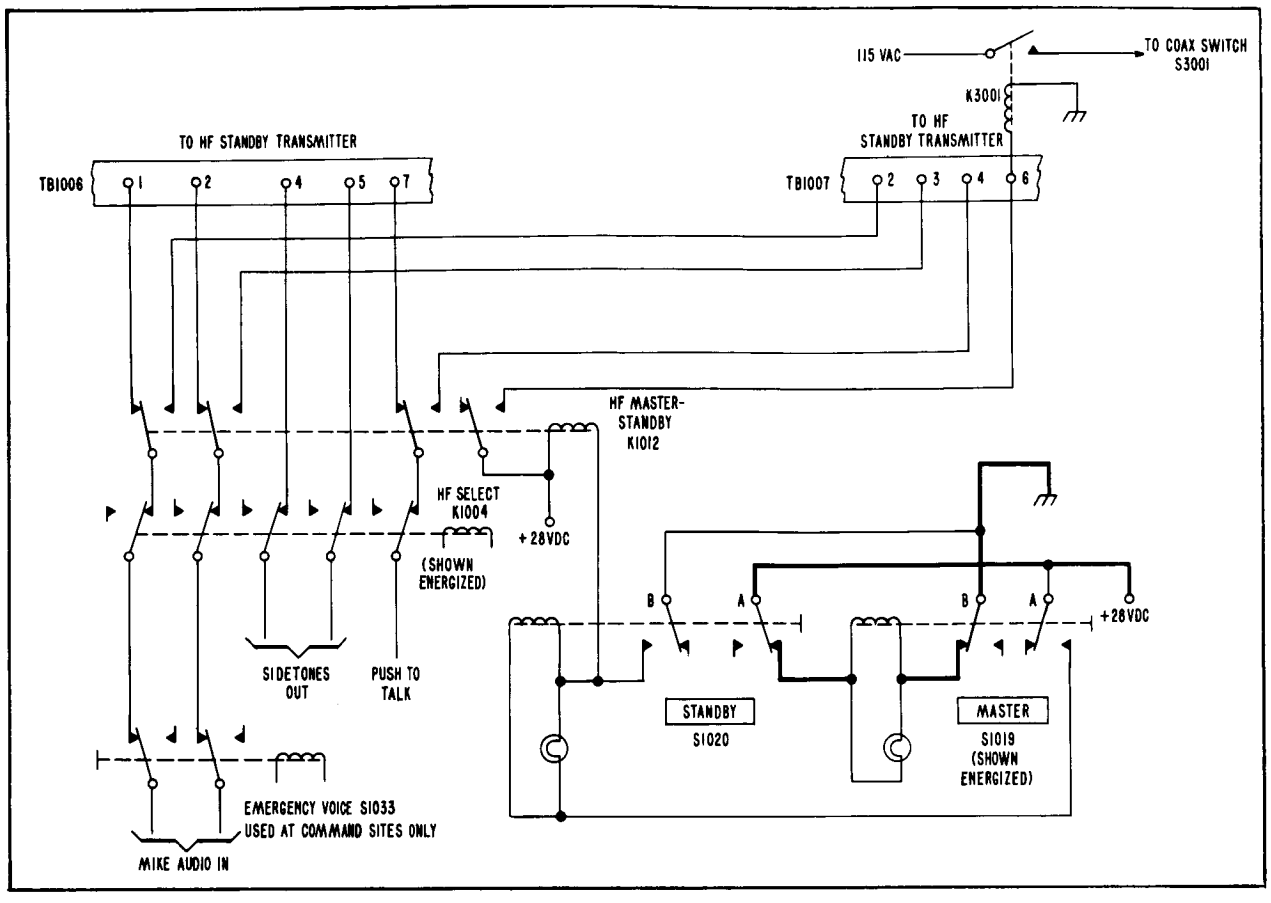

Figure 4-12. HF Voice Transmitter Remote Selection Circuit

Low level audio output of UHF voice receiver No. 1

Low level audio output of UHF voice receiver No. 2

Audio output of HF voice receiver No. 1

Audio output of HF voice receiver No. 2

Sidetone audio of master UHF voice transmitter

Sidetone audio of standby UHF voice transmitter

Sidetone audio of HF voice transmitter (either master or standby where two transmitters are installed)

Basically, the signal presence indicator converts the input audio signal into a control voltage that causes a relay to energize and thereby provide a ground to the particular panel indicator lamp on the console. A description of the circuit theory follows:

(2). CIRCUIT THEORY (See Figure 7-34.)

The input audio signal is applied through pins 12 and 3 of jack J301 to the primary winding of matching transformer T301. The secondary of T301 applies the signal to the base of transistor Q301 which is biased close to the saturation level. This transistor is a type P-N-P, so that each positive half-cycle of the signal on the base cuts Q301 off and produces a series of square waves on the collector. The wave is coupled through capacitor C302 to the base of Q302, which is also biased close to saturation. This square wave has a large enough amplitude so that the negative portion cuts Q302 off. Since it is an N-P-N type, an inverted square wave appears at the collector. Capacitor C303 couples the square wave to the cathode side of diode CR301, which passes only the negative-going portion of the square wave to the base of Q303. With no signal present on its base, this transistor is biased below cutoff by virtue of the emitter voltage being more negative than the base voltage. Diode CR303 provides a path for current flow so that the emitter bias voltage can be developed across resistor R308. Transistor Q303 is gated into conduction each time the negative portion of the square wave appears on the base, as this voltage variation drives the base more negative than the emitter. When it conducts, Q303 allows current to flow through the coil of relay K301, and the relay energizes. Contacts 4 and 6 of K301 then close and complete the ground path for the particular indicator lamps associated with the signal presence indicator.

K. 28 VDC POWER SUPPLY

Switches, indicators, and relays on the communication technician's console are energized by 28 VDC from the console 28-VDC power supply. Physically, the 28-VDC power supply consists of the relay chassis, two switches on the communication technician's console, and the dual power supply. The dual power supply consists of four chassis (two power supply units and two filter units) and a front panel. Since both power supply units and filter units are identical, only the No. 1 unit will be discussed.

(1). DUAL POWER SUPPLY

Depressing switch S1005 on the auxiliary control panel (figure 3-24) feeds primary power, 115 VAC, to pins A and B of jack J201 on the dual power supply. As shown in figure 7-35, the primary power is applied to the primary winding of power

transformer T1 through fuses F201 and F202. The fuses are mounted in indicating-type holders; when a fuse blows, a neon bulb in parallel with the fuse is lit. The power supply unit is a conventional DC power supply with silicon rectifiers in a bridge configuration and with an LC filter. Note that there is a fuse, F1, on the DC side of the power supply unit. This fuse is not mounted in an indicating-type holder. Power supply PS201 is rated at 28 VDC at 10 amperes maximum load. Normal load on the communication technician's console, however, is approximately 2 to 4 amperes. When power supply PS201 is adjusted for operation at 28 VDC at 10 ampere load, a no-load voltage of over 35 VDC is present. Therefore, to alleviate excessive output voltages under loads of less than 10 amperes, the secondary of power transformer T1 has multiple taps to allow adjustment of the output voltage. The voltage difference between terminals 1 and 2 is 1.5 VAC, while between terminals 3 and 4, 4 and 5, and 5 and 6 the voltage difference is 3 VAC. Therefore, by connecting the AC leads of the rectifier to different taps on the transformer, the AC input to the rectifier can be varied over a range of 10.5 volts (RMS) which results in an approximate 14.5 VDC variation of the power supply output.

(2). DUAL POWER SUPPLY CONTROL CIRCUITS

(a). The control circuits for the dual power supply consists of two switches on the auxiliary control panel and the relay chassis circuitry which is a part of the dual power supply. As shown in figure 4-13, when switch S1005 is depressed, primary power (115 VAC) is applied to power supply No. 1 in the dual power supply. The 28 VDC output of power supply No. 1 is taken from terminal 3 of terminal board TB1 and applied to the energizing coil of relay K201. With relay K201 energized, 28 VDC is fed through contacts 1 and 2 of relay K201 to the holding coil of switch S1005. The "No. 1 ON" green indicator lamp lights, indicating that the power supply is on and operating properly. If power supply No. 2 has not been turned on by depressing switch S1018, 28 VDC from power supply No. 1 is fed through contacts 6 and 8 of relay K202 to the "No. 2 OFF" red indicator lamp. The indicator lamp lights, indicating that power supply No. 2 is not on. Rectifier CR202 prevents current from power supply No. 1 from circulating through power supply No. 2 and also from energizing relay K202 when power supply No. 2 is not on.

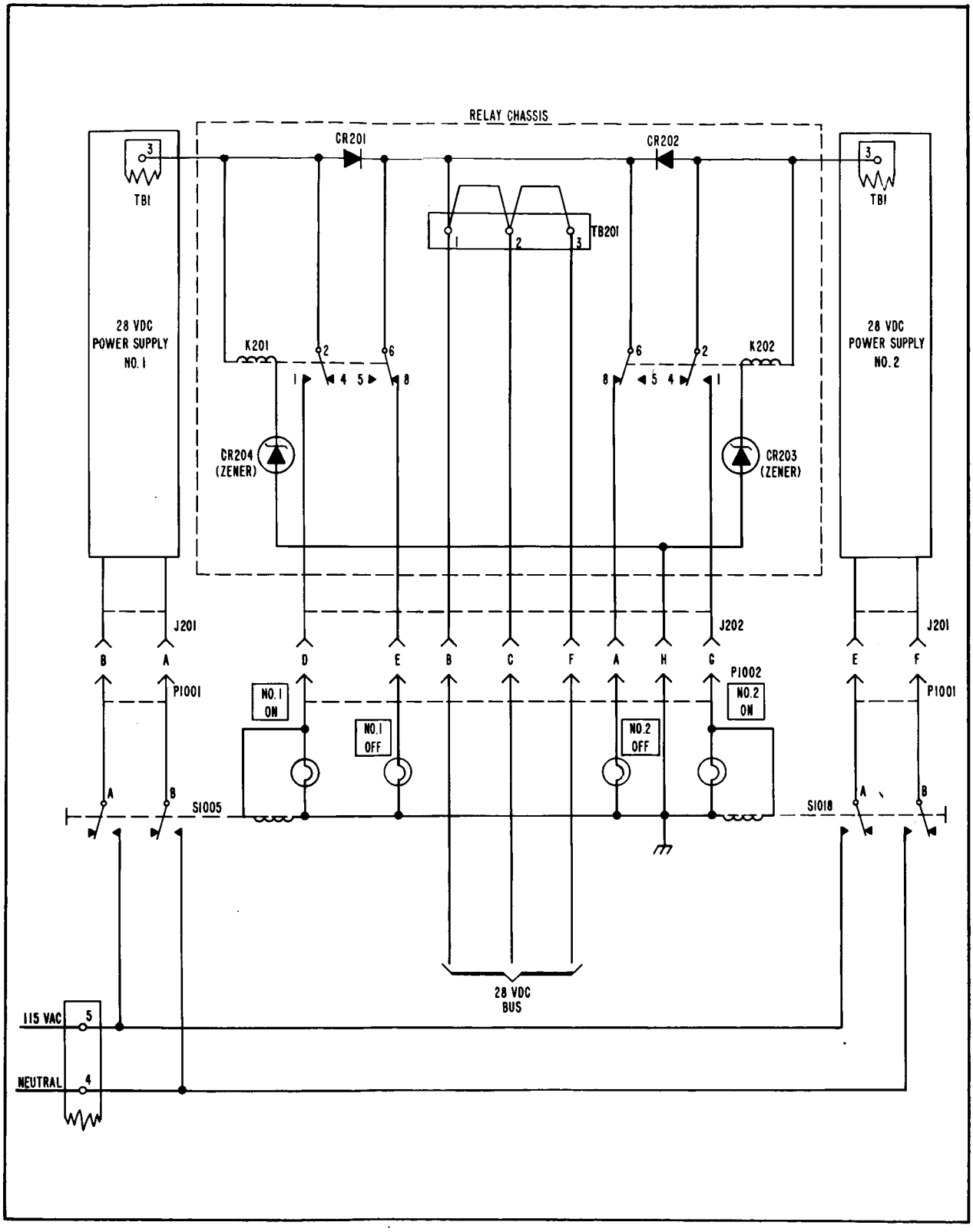

Figure 4-13. Dual Power Supply Control Circuit, Simplified Schematic

Note

The indicator lamps associated with power supply No. 1 are in the same physical unit as switch S1005; the indicator lamps associated with power supply No. 2 are in the same physical unit as switch S1018.

(b). Zener diode CR204 in series with the coil of relay K201 provides a sharp pull-in and drop-out of relay K201 as the voltage output of power supply No. 1 increases or decreases. This action prevents the output of power supply No. 1 from being applied to the communication technician's console 28 VDC bus until it reaches operating value. Also, in the event of a malfunction resulting in low voltage, the output of power supply No. 1 is disconnected from the console 28 VDC bus. When power supply No. 1 is turned on, its output begins to rise toward 28 volts. However, until the output reaches 18 volts, the resistance of Zener diode CR204 is very high and virtually no current flows through the energizing coil of relay K201. As the power supply output increases above 18 volts, the resistance of Zener diode CR204 decreases, which results in a rapid increase of current flow through the energizing coil of relay K201. (The distinguishing characteristic of Zener diodes is that with applied voltages above the diode reference value, 18 volts in this case, and below the maximum rated value, the resistance of the diode varies inversely with the applied voltage; current through the diode varies greatly, but the voltage drop across it remains practically constant. The action of the Zener diode is thus like that of a VR tube.) When the output voltage of power supply No. 1 reaches approximately 22.5 volts, sufficient current flows (4.5 milliamperes) to energize relay K201. Since the resistance of the relay coil is 1000 ohms, the values of voltage in the circuit at this time are as follows:

Total applied voltage	22.5 VDC
Voltage drop across CR204	18.0 VDC
Voltage drop across K201 coil	4.5 VDC
Current $(\frac{4.5}{1000})$	4.5 MA

As the output of power supply No. 1 continues to increase, the voltage drop across Zener diode CR204 remains at approximately 18 volts, the current through the circuit increases to about 10 milliamperes, and the voltage drop across the coil of relay K201 increases to about 10 volts.

(c). If a malfunction develops such that the output voltage of power supply No. 1 begins to drop, relay K201 will drop-out sharply at about 22.5 volts. This action is due to the sharp increase in the resistance of Zener diode CR204 as the voltage across it drops to 18 volts. (As explained in the previous paragraph, with an output of 22.5 volts from power supply No. 1, 4.5 volts appear across the coil of relay K201 and 18 volts appear across the Zener diode CR204.) Blocking diode CR204 prevents current from power supply No. 2 from flowing through the Zener diode CR204 and the relay K201 coil. When relay K201 is de-energized, the holding coil circuit of switch S1005 is opened (by the opening of contacts 1 and 2), and primary power is disconnected from the input of power supply No. 1.

(d). The action of the control circuit of power supply No. 2 is identical to that of the control circuit of power supply No. 1.

(e). A summary of the action of the 28 VDC power supply control circuits is as follows:

1. Switch S1005 is manually closed, and primary power is applied to power supply No. 1.

2. Power Supply No. 1 puts 28 VDC on the bus, energizing relay K201 and lighting the red indicator lamps in the control circuit of power supply No. 2.

3. Relay K201 closes, lighting the green indicator lamp associated with power supply No. 1 and applying voltage to the holding coil of switch S1005.

4. Switch S1005 remains closed, and power supply No. 1 is in operation.

5. Switch S1018 is manually closed, and primary power is applied to power supply No. 2.

6. Power Supply No. 2 puts 28 VDC on the bus in parallel with the voltage from power supply No. 1.

7. Relay K202 closes, turning off the red indicator lamp associated with power supply No. 2 and lighting the green indicator lamp associated with power supply No. 2. Also, voltage is applied to the holding coil of switch S1018, thus holding S1018 in the on position. Both power supplies are now in operation.

8. If the voltage output of one of the power supplies drops to approximately 22.5 volts, the control relay K201 or K202 associated with the malfunctioning power supply is de-energized and the primary power to that power supply is removed. Voltage from the other power supply lights the red indicator lamp of the malfunctioning power supply. The ratings of the power supplies are such that one of them can supply all of the power required by the communication technician's console in the event of the failure of the other.

L. 65 VDC POWER SUPPLY

(1). At sites where the transmitting and/or receiving equipment is located remotely from the communication technician's console, a 65-VDC power supply is used to energize those relays where line loss is a problem. Physically, the 65-VDC power supply consists of a single panel mounted in the rear of the communication technician's console.

(2). When switch S1 is closed (see figure 7-43), 115-VAC primary power is applied through fuse F1 and terminals 1 and 2 of reactor L1 to terminals 1 and 2 of power transformer T1. A neon, power-on indicating lamp, DS1, is connected across the primary line going to the power supply. The 65-VDC power supply unit is a magnetic-type voltage regulator, with full-wave silicon-diode rectifiers and a capacitive input filter, With 115 VAC applied to the power supply, 105 VAC is developed across terminals 1 and 2 of reactor L2 and 100 VAC is across terminals 1 and 2 of the

primary winding of power transformer T1. The primary winding of T1 and capacitor C1 form a tuned circuit at 60 CPS. At this frequency, a high circulating current flows in the tuned circuit. The autotransformer action of the primary winding of T1 is sufficient to produce approximately 480 VAC across the tuned circuit at 60 CPS. Since the input to the power supply is frequency sensitive, it is necessary that the primary power be held very close to 60 cycles; otherwise, the output voltage of the power supply will be varying as the input frequency changes. The resonant tank operates with the transformer in a saturated condition, in such a manner that tank current will be either inductive or capacitive, respectively, for voltages above or below 115 VAC. The current in conjunction with the linear choke will cause the voltage across the output to increase or decrease. That is, for lower than normal input voltages, the tank will have a capacitive current and will cause the combination of choke and tank to produce a higher voltage than that at the input. Although the power supply is not load-regulated, as such, some load compensation is accomplished by the magnetic circuitry, i.e., back through the saturated power transformer T1, so that regulation is somewhat better than in an equivalent unregulated supply. Reactor L1 is built in three sections; one section is used for filtering the primary of T1 and the other two sections are used for filtering the secondary of T1. At 60 CPS, approximately 60 VAC is developed between the output terminal (4 or 6) of each of the two sections of L1 and the center tap (terminal 7) of T1. The output voltage of T1 is rectified by silicon-diodes CR1 and CR2, and filtered by the network consisting of capacitor C2 and resistor R1. It should be noted that the negative output terminal of the power supply is not connected to chassis ground.

4-3. SYSTEM OPERATION OF UHF VOICE RECEIVING SYSTEM

A. GENERAL

(1). The UHF voice receiving system for the typical sites is a dual, space and polarization diversity receiving system in which two identical sets of triplexers, preamplifiers, and receivers are used with circularly polarized antennas which have opposite senses of polarization. Therefore, this system consists of two signal channels, each of which is fed by separate antennas. The receiver outputs can be combined in a dual diversity combiner.

(2). The antennas employed in this system are so spaced that two distinct paths are provided for the signals transmitted from the capsule. Because of

the low probability that the signal will fade in both paths at exactly the same time, the effects of signal fading are greatly reduced. Each antenna used for UHF voice receiving is an array consisting of four circularly polarized, helical elements. Because the capsule transmitting antenna is linearly polarized, circular polarization of the receiving antennas is desirable so that excessive signal attenuation does not result from tumbling or other motion of the capsule in flight, or because of the Faraday effect as related to electromagnetic radiation. This is the rotation of the plane of polarization of linearly polarized radiation caused by the earth's magnetic lines of force when the radiation passes through the ionosphere.

(3). In each signal channel of the UHF voice receiving system, as shown in figure 4-1, the signal received by the antenna is applied to a triplexer. This unit filters the UHF voice signal from the two telemetry signals (TM1 and TM2) so that the antenna also receives and channels the three signals into isolated output paths. The UHF voice signal is next applied to a low noise level preamplifier and then to the UHF voice receiver. This receiver has three types of audio outputs: the post-detector audio, the high-level audio, and the low-level audio. The post-detector audio outputs from the two UHF voice receivers become the input to the dual diversity combiner, which produces the normally used UHF audio for the system. The high-level audio is applied to the speaker panel in the voice receiver rack for local monitoring. The low-level audio from each receiver is fed directly to the communication technician's console for system use in the event the diversity combiner is not in operation.

(4). The dual diversity combiner accepts the post-detector audio from each UHF voice receiver, amplifies the two audio signals, filters noise from each, and combines the two signals. Because of the combining process, the signal-to-noise ratio of the combined, or diversity, audio output is at least as good as the better of the two input signal-to-noise ratios. The dual diversity combiner provides two levels of output audio: a high-level signal, which is applied to the speaker panel in the voice receiver rack for local monitoring purposes; and a low-level signal, which is applied to the communication technician's console for distribution to the intercom system. Both audio outputs are sent over 600-ohm balanced lines.

B. SIGNAL FLOW AT TYPICAL SITES

(1). As shown in figure 4-14, the RF signal received by UHF antenna No. 1 is fed through the triplexer and the voice preamplifier to jack J4001 on top of

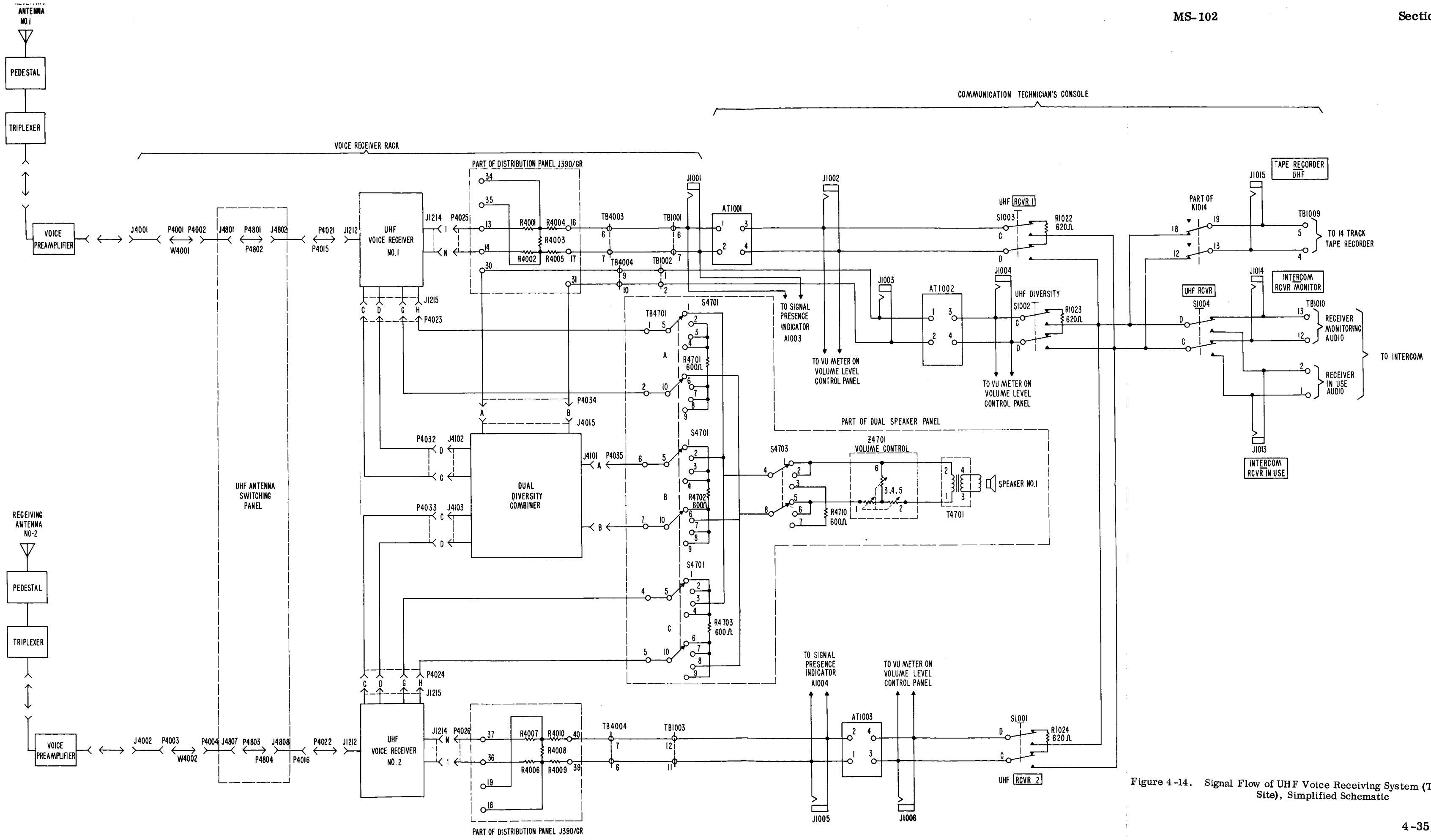

Figure 4-14. Signal Flow of UHF Voice Receiving System (Typical Site), Simplified Schematic

STANDARD SITE

the voice receiver cabinet. From jack J4001 the RF signal is fed to jack J4801 on the UHF antenna switching panel via coaxial cable W4001, through the switching panel to jack J4802 via a patch cable, and applied to "ANTENNA" jack J1212 on the front panel of UHF voice receiver No. 1. The three audio signal outputs from UHF receiver No. 1 are carried throughout the capsule communication system on a shielded, twisted pair of conductors so that noise and interference pickup will be kept to a minimum.

(2). The high-level audio output of UHF voice receiver No. 1 is fed through pins G and H of plug P4023 to terminals 1 and 2 of terminal board TB4701 on the dual speaker panel. This audio signal is fed through contacts 5 and 1, and contacts 10 and 6 of switch S4701 A to contacts 4 and 8 of switch S4703. Resistor R4701, connected between contacts 2, 3, 4, and contacts 7, 8, 9, of switch S4701A, terminates the audio signal from UHF voice receiver No. 1 when the audio signal from UHF voice receiver No. 2 or from the dual diversity combiner is being monitored. From contacts 1 and 2, and contacts 5 and 6 of switch S4703 the audio signal is fed through volume control Z4701 and audio transformer T4701 to the No. 1 speaker. Resistor R4710, connected between contacts 3 and 7 of switch S4703, terminates the audio signal from the UHF voice receivers when the audio signal from the HF voice receiver is being monitored.

(3). The low-level audio output of UHF voice receiver No. 1 is fed through pins I and N of plug P4025 to terminals 13 and 14 on the distribution panel. The audio signal is then fed through an H-pad matching attenuator to terminals 16 and 17 on the distribution panel and applied to terminals 6 and 7 of terminal board TB4003. The H-pad, composed of resistors R4001 through R4005, functions as a constant impedance (600 ohms) network providing approximately 16-DB attenuation of the audio signal. From terminals 6 and 7 of terminal board TB4003, the audio signal is applied to terminals 6 and 7 of terminal board TB1001, at the communication technician's console, and then applied to attenuator AT1001. Signal presence indicator A1003 is paralleled with the incoming audio signal. Refer to paragraph 4-2.J. for an explanation of the signal presence indicator circuits. Phone jacks J1001 and J1002 are provided for monitoring the input and output of attenuator AT1001. Attenuator AT1001 provides 20-DB attenuation of the audio signal in 1-DB steps. It should be noted that the DB indication stencilled on the attenuator progresses from 0 to 20 in a clockwise direction. With the attenuator set to 20 DB (fully clockwise), 0-DB attenuation is provided, and with the attenuator set to 0 DB (fully counterclockwise), 20-DB

attenuation is provided. By depressing "UHF RCVR 1" button on the auxiliary control panel (figure 3-22) the output of attenuator AT1001 can be monitored on the volume level control panel (figure 3-23). The audio signal from attenuator AT1001 is applied to terminals C and D of UHF "RCVR 1" switch S1003. If switch S1003 is in the de-energized position, the audio signal is terminated by resistor R1022. However, if switch S1003 is energized, the audio signal is fed through the switch contacts to terminals C and D of "UHF RCVR" switch S1004. If switch S1004 is in the de-energized position, the audio signal is applied to terminals 12 and 13 of terminal board TB1010 and fed into the intercom system for monitoring. "INTERCOM RCVR MONITOR" jack J1014 is provided for monitoring the audio signal before being fed into the WECO INTERCOM system. However, if switch S1004 is energized, the audio signal is applied to terminals 1 and 2 of terminal board TB1010 and fed into the WECO INTERCOM system for use instead of monitoring purposes. Again, "INTERCOM RCVR IN USE" jack J1013 is provided for monitoring the audio signal before being fed into the WECO INTERCOM system. When UHF "RCVR 1" switch S1003, UHF "DIVERSITY" switch S1002, or UHF "RCVR 2" switch S1001 is in the energized position, the corresponding audio signal is fed through contacts 18 and 19, and contacts 12 and 13 of relay K1014 to terminals 4 and 5 of terminal board TB1009, and also fed to the 14-track tape recorder. It should be remembered that the switch holding circuits prevent more than one switch (S1001, S1002, S1003) from being energized at a time. "TAPE RECORDER UHF" jack J1015 is provided for monitoring the audio signal before being fed to the tape recorder.

(4). As shown in figure 4-14, the signal flow for the UHF voice receiver No. 2 antenna circuit and the high-level and low-level audio signal outputs differ only in symbol number designations from that of the UHF voice receiver No. 1 signal flow. Therefore, only the post-detector audio output of receiver No. 2 will be discussed. The post-detector audio output of receiver No. 1 and receiver No. 2 is fed simultaneously through pins C and D of plug P4023 to pins C and D of jacks J4102 and J4103 on the dual diversity combiner. The audio output signal from the dual diversity combiner is fed to terminals 30 and 31 on the distribution panel and then applied to terminals 9 and 10 of terminal board TB4004. From terminals 9 and 10 of terminal board TB4004, the audio signal is applied to terminals 1 and 2 of terminal board TB1002, at the communication technician's console, and then applied to attenuator AT1002. Phone jacks J1003 and J1004 are provided for monitoring the input and output of attenuator AT1002.

The attenuation and operation of attenuator AT1002 is identical with that of attenuator AT1001 which was explained in the preceding paragraph. By depressing "UHF RCVR DIV" button on the auxiliary control panel (figure 3-22), the output of attenuator AT1002 can be monitored on the volume level control panel (figure 3-23). The audio signal from attenuator AT1002 is applied to terminals C and D of UHF "DIVERSITY" switch S1002. If switch S1002 is in the de-energized position, the audio signal is terminated by resistor R1023. However, if switch S1002 is energized, the audio signal is fed through the switch contacts to terminals C and D of "UHF RCVR" switch S1004. From this point, the signal flow is identical to that for the low-level audio signal path for the UHF voice receiver No. 1 which was discussed in the preceding paragraphs.

C. SIGNAL FLOW AT CAPE CANAVERAL

(1). The UHF voice receiving signal flow at Cape Canaveral differs from the signal flow at a typical site in that there are three UHF voice receivers instead of two, and there is no provision for diversity operation. Two TLM-18 antennas are used; one feeds receivers No. 1 and No. 2, and the other feeds receiver No. 3 as shown in figure 4-15. The signal flow for UHF voice receivers No. 1 and No. 2 is very similar except for symbol number designations. Therefore, only the signal flow for UHF voice receivers No. 1 and No. 3 will be discussed.

(2). Since diversity operation is not provided at Cape Canaveral, the RF signal for UHF voice receivers No. 1 and No. 2, which are located at the TEL 3 building, is received by a single antenna instead of two antennas. The UHF signal received by the TLM-18 antenna is fed through the voice preamplifier to jack J4001 on top of the voice receiver cabinet. From jack J4001, the UHF signal is fed to jack J4801 on the UHF antenna switching panel, through the antenna switching relay K4801 to jack J4802 via the various patch cables, and applied to "ANTENNA" jack J1212 on UHF voice receiver No. 1. (When it is desired to use UHF voice receiver No. 2, antenna switching relay K4801 is energized so that the RF signal is applied to "ANTENNA" jack J1212 on UHF voice receiver No. 2.) The three audio signal outputs from UHF voice receiver No. 1, and also receivers No. 2 and No. 3, are carried throughout the capsule communications system on a shielded, twisted pair of conductors so that noise and interference pickup will be kept to a minimum.

(3). The high-level audio output of UHF voice receiver No. 1 is fed through pins G and H of plug P4023 to terminals 1 and 2 of terminal board TB4701 on

the dual speaker panel. This audio signal is fed through contacts 5 and 1 and contacts 10 and 6 of switch S4701A to contacts 4 and 8 of switch S4703. Resistor R4701, connected between contacts 2, 3, 4, and contacts 7, 8, 9 of switch S4701A, terminates the audio signal from UHF voice receiver No. 1 when the audio signal from UHF voice receiver No. 2 is being monitored. From contacts 1 and 2 and contacts 5 and 6 of switch S4703, the audio signal is fed through volume control Z4701 and audio transformer T4701 to the No. 1 speaker. Resistor R4710, connected between contacts 3 and 7 of switch S4703, terminates the audio signal from UHF voice receivers No. 1 and No. 2 when the audio signal from the HF voice receiver is being monitored.

(4). The low-level audio output of UHF voice receiver No. 1 is fed through pins I and N of plug P4025 to terminals 13 and 14 on the distribution panel. The audio signal is then fed through an H-pad matching attenuator to terminals 16 and 17 on the distribution panel and applied to terminals 6 and 7 of terminal board TB4003. The H-pad, composed of resistors R4001 through R4005, functions as a constant impedance (600 ohms) network providing approximately 16-DB attenuation of the audio signal. From terminals 6 and 7 of terminal board TB4003, the audio signal is applied to terminals 6 and 7 of terminal board TB1001 at the communication technician's console, and then applied to attenuator AT1001. Signal presence indicator A1003 is paralleled with the incoming audio signal. Refer to paragraph 4-2.J. for an explanation of the signal presence indicator circuits. Phone jacks J1001 and J1002 are provided for monitoring the input and output of attenuator AT1001. Attenuator AT1001 provides 20-DB attenuation of the audio signal in 1-DB steps. It should be noted that the DB indication stencilled on the attenuator progresses from 0 to 20 in a clockwise direction. With the attenuator set to 20 DB (fully clockwise), 0 DB attenuation is provided, and with the attenuator set to 0 DB (fully counterclockwise), 20-DB attenuation is provided. The output of attenuator AT1001 can also be monitored on the volume level indicator control panel (figure 3-25) by depressing "UHF RCVR 1" button on the auxiliary control panel (figure 3-24). The audio signal from the attenuator AT1001 is applied to terminals C and D of UHF "RCVR 1" switch S1003. If switch S1003 is in the de-energized position, the audio signal is terminated by resistor R1022. However, if switch S1003 is energized, the audio signal is fed through the switch contacts to terminals C and D of "UHF RCVR" switch S1004. If switch S1004 is in the de-energized position, the audio signal is applied to terminals 12 and 13 of terminal board TB1010 and fed into the INTERCOM system for monitoring. However, if switch S1004 is

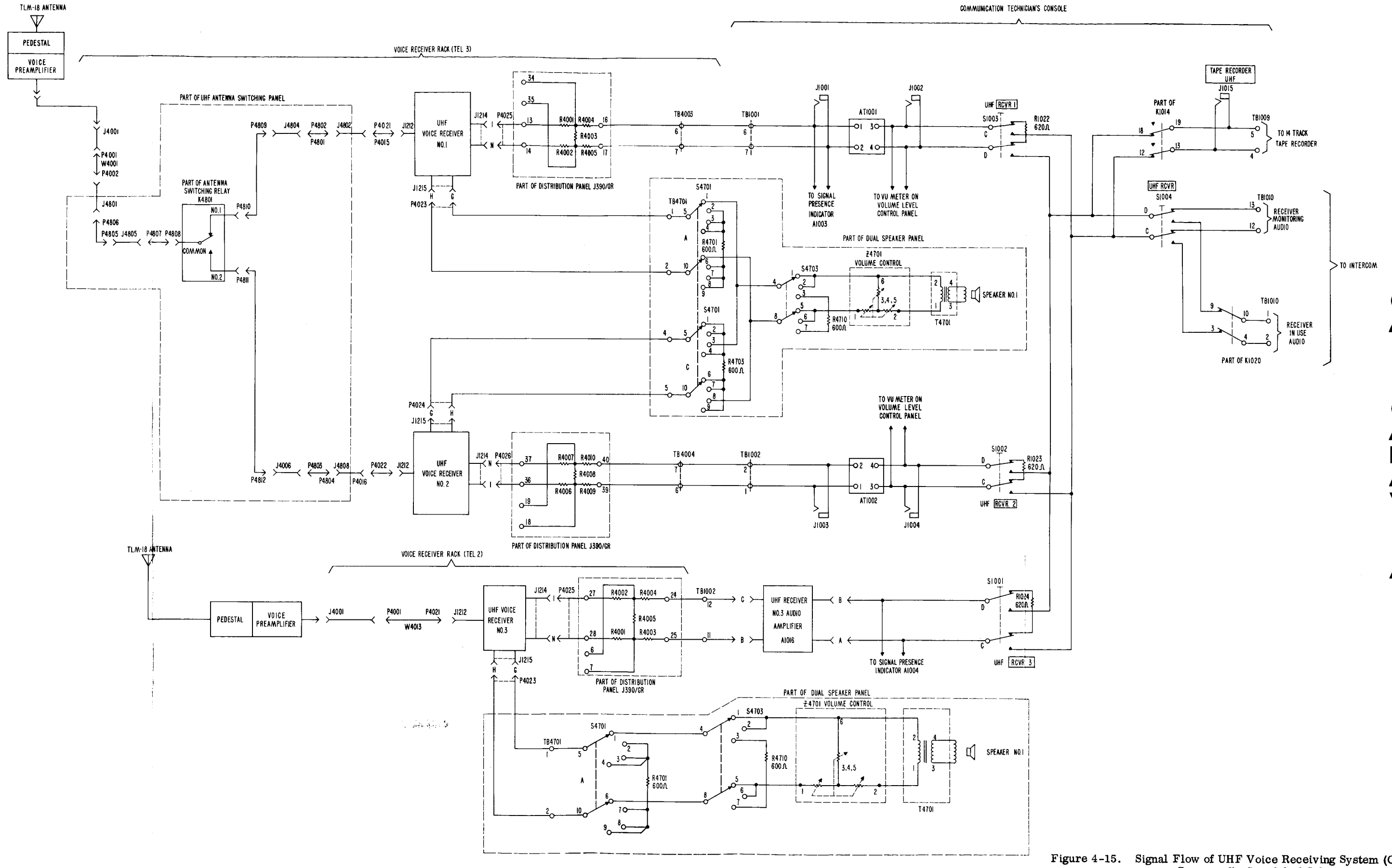

Figure 4-15. Signal Flow of UHF Voice Receiving System (Cape Canaveral), Simplified Schematic

CAPE CANAVERAL

energized, the audio signal is fed through contacts 9 and 10 and contacts 3 and 4 of relay K1020 and then applied to terminals 1 and 2 of terminal board TB1010. The audio signal is then fed into the INTERCOM system for use instead of monitoring purposes. When UHF "RCVR 1" switch S1003, UHF "RCVR 2" switch S1002, or UHF "RCVR 3" switch S1001 is in the energized position, the corresponding audio signal is also fed through contacts 18 and 19 and contacts 12 and 13 of relay K1014 to terminals 4 and 5 of terminal board TB1009 and then fed to the 14-track tape recorder. It should be remembered that the switch holding circuits prevent more than one switch (S1001, S1002, S1003) from being energized at a time. "TAPE RECORDER UHF" jack J1015 is provided for monitoring the audio signal before being fed to the tape recorder.

(5). The RF signal for UHF voice receiver No. 3, which is located at the TEL 2 building, is received by the TLM-18 antenna and fed through the voice preamplifier to jack J4001 on top of the voice receiver cabinet. From jack J4001, the RF signal is fed to "ANTENNA" jack J1212 on UHF voice receiver No. 3. From this point the signal flow is very similar to that for UHF voice receiver No. 1; therefore, only the major differences will be discussed. The high-level audio output from receiver No. 3 is fed through pins G and H of plug P4023 and applied to the dual speaker panel in the same manner as that for receiver No. 1 located at TEL 3. Also, the low-level audio output of receiver No. 3 is fed through pins I and N of plug P4025 through an H-pad matching attenuator to the communication technician's console. However, the attenuator used in the receiver No. 1 signal flow path is replaced with audio amplifier A1016 in the receiver No. 3 signal flow path. Audio amplifier A1016 compensates for the line losses due to the remote location of the TEL 2 building. The output of audio amplifier A1016 can be monitored on the volume level indicator control panel (figure 3-25) by depressing "UHF RCVR 3" button on the auxiliary control panel (figure 3-24). From this point, the audio signal is distributed to the INTERCOM system and the 14-track tape recorder in the same manner as that used for receiver No. 1.

D. SIGNAL FLOW AT BERMUDA

(1). As shown in figure 4-16, the RF signal received by UHF antenna No. 1 is fed through the triplexer and the voice preamplifier to jack J4001 on top of the voice receiver cabinet. From jack J4001, the RF signal is fed to jack J4801 on the UHF antenna switching panel via coaxial cable W4001, through the switching panel to jack J4802 via a patch cable, and applied to ANTENNA jack J1212 on the front panel

of UHF voice receiver No. 1. The three audio signal outputs from UHF receiver No. 1 are carried throughout the capsule communication system on a shielded, twisted pair of conductors so that noise and interference pickup will be kept to a minimum.

(2). The high-level audio output of UHF voice receiver No. 1 is fed through pins G and H of plug P4023 to terminals 1 and 2 of terminal board TB4701 on the dual speaker panel. This audio signal is fed through contacts 5 and 1 and contacts 10 and 6 of switch S4701A to contacts 4 and 8 of switch S4703. Resistor R4701, connected between contacts 2, 3, 4 and contacts 7, 8, 9 of switch S4701A, terminates the audio signal from UHF voice receiver No. 1 when the audio signal from UHF voice receiver No. 2 or from the dual diversity combiner is being monitored. From contacts 1 and 2 and contacts 5 and 6 of switch S4703, the audio signal is fed through volume control Z4701 and audio transformer T4701 to the No. 1 speaker. Resistor R4710, connected between contacts 3 and 7 of switch S4703, terminates the audio signal from the UHF voice receivers when the audio signal from the HF voice receiver is being monitored.

(3). The low-level audio output of UHF voice receiver No. 1 is fed through pins I and N of plug P4025 to terminals 13 and 14 on the distribution panel. The audio signal is then fed through an H-pad matching attenuator to terminals 16 and 17 on the distribution panel and applied to terminals 6 and 7 of terminal board TB4003. The H-pad, composed of resistors R4001 through R4005, functions as a constant impedance (600 ohms) network providing approximately 16 DB attenuation of the audio signal. From terminals 6 and 7 of terminal board TB4003, the audio signal is applied to terminals 6 and 7 of terminal board TB1001 at the communication technician's console and fed through audio amplifier A1014. By depressing "UHF RCVR 1" button on the auxiliary control panel (figure 3-24), the output of audio amplifier A1014 can be monitored on the volume level indicator control panel (figure 3-25). Signal presence indicator A1003 is parallel with the output of audio amplifier A1014. Refer to paragraph 4-2.J. for an explanation of the signal presence indicator circuits. The audio signal from audio amplifier A1014 is applied to terminals C and D of UHF "RCVR 1" switch S1003. If switch S1003 is in the de-energized position, the audio signal is terminated by resistor R1022. However, if switch S1003 is energized, the audio signal is fed through the switch contacts to terminals C and D of "UHF RCVR" switch S1004. If switch S1004 is in the de-energized position, the audio signal is applied to terminals 12 and 13 of terminal board TB1010 and fed into the intercom system for

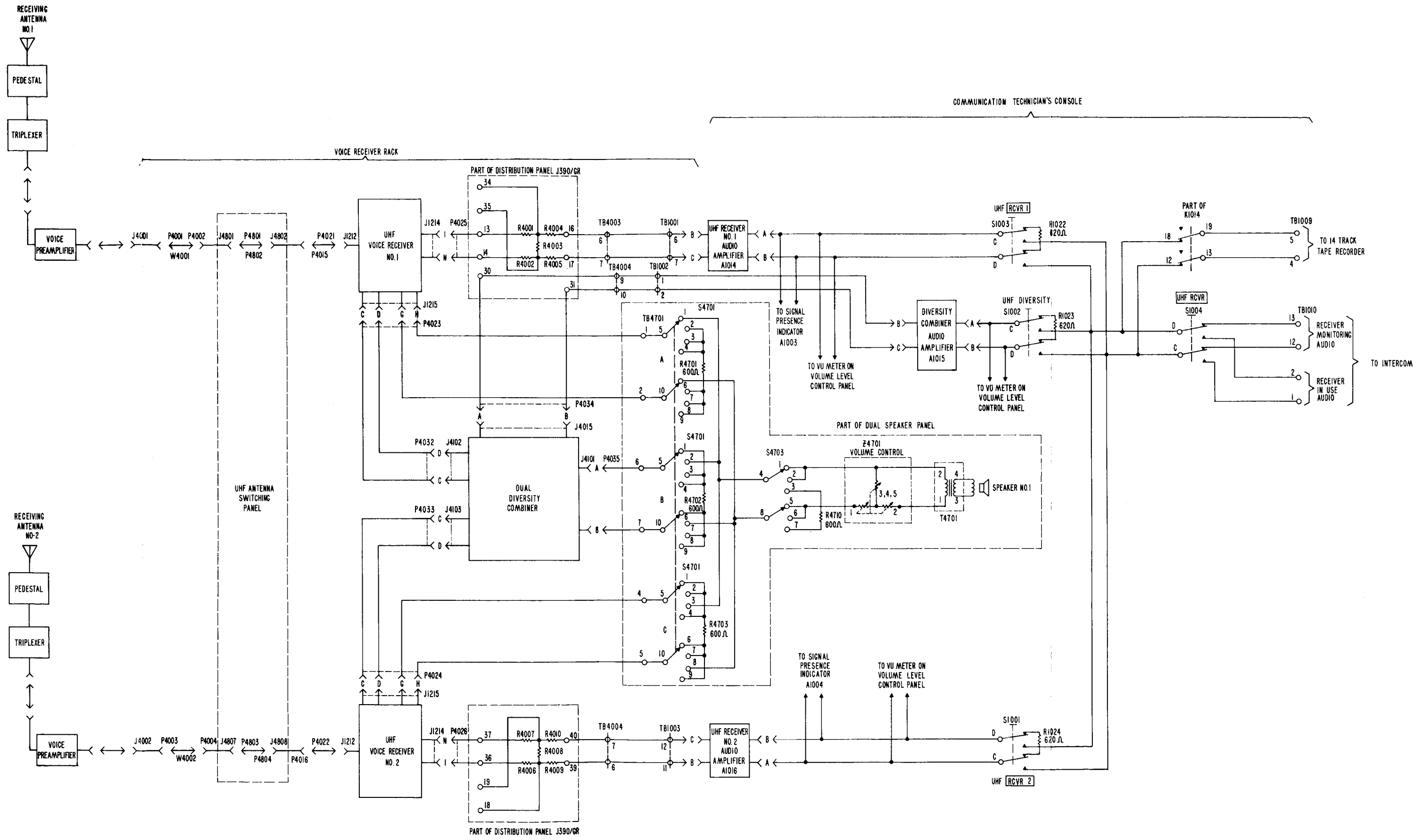

Figure 4-16. Signal Flow of UHF Voice Receiving System (Bermuda) Simplified Schematic

BERMUDA

monitoring. However, if switch S1004 is energized, the audio signal is applied to terminals 1 and 2 of terminal board TB1010 and fed into the intercom system for use instead of monitoring purposes. When UHF "RCVR 1" switch S1003, UHF "DIVERSITY" switch S1002, or UHF "RCVR 2" switch S1001 is in the energized position, the corresponding audio signal is also fed through contacts 18 and 19, and contacts 12 and 13 of relay K1014 to terminals 4 and 5 of terminal board TB1009 and fed to the 14-track tape recorder. It should be remembered that the switch holding circuits prevent more than one switch (S1001, S1002, S1003) from being energized at a time.

(4). As shown in figure 4-16, the signal flow for the UHF voice receiver No. 2 antenna circuit and the high-level and low-level audio signal outputs differ only in symbol number designations from that of the UHF voice receiver No. 1 signal flow.

Therefore, only the post-detector audio output of receiver No. 2 will be discussed. The post-detector audio output of receiver No. 1 and receiver No. 2 is fed simultaneously through pins C and D of plug P4023 to pins C and D of jacks J4102 and J4103 on the dual diversity combiner. The audio output signal from the dual diversity combiner is fed to terminals 30 and 31 on the distribution panel and then applied to terminals 9 and 10 of terminal board TB4004. From terminals 9 and 10 of terminal board TB4004, the audio signal is applied to terminals 1 and 2 of terminal board TB1002 at the communication technician's console and fed through audio amplifier A1015. By depressing "UHF RCVR DIV" button on the auxiliary control panel (figure 3-22), the output of audio amplifier A1015 can be monitored on the volume level control panel (figure 3-23). The audio signal from audio amplifier A1015 is applied to terminals C and D of UHF "DIVERSITY" switch S1002. If switch S1003 is in the de-energized position, the audio signal is terminated by resistor R1023. However, if switch S1002 is energized, the audio signal is fed through the switch contacts to terminals C and D of "UHF RCVR" switch S1004. From this point, the signal flow is identical to that for the low-level audio signal path for the UHF voice receiver No. 1 which was discussed in the preceding paragraphs.

E. SIGNAL FLOW AT GBI AND GTI

(1). As shown in figure 4-17, the signal flow for both UHF receivers is very similar except for symbol number designations. Therefore, only the signal flow for UHF voice receiver No. 1 will be discussed. Since diversity operation is not provided at GBI and GTI, the RF signal is received by a single antenna instead of two

antennas. The UHF signal received by the UHF antenna is fed through the triplexer and voice preamplifier to jack J4801 on the UHF antenna switching panel. From jack J4801, the UHF signal is fed through the UHF antenna switching panel via the various patch cables and the contacts of antenna switching relay K4801 to "ANTENNA" jack J1212 on the UHF voice receiver No. 1. (When it is desired to use UHF voice receiver No. 2, antenna switching relay K4801 is energized so that the RF signal is fed to "ANTENNA" jack J1212 on UHF voice receiver No. 2.) The two audio signal outputs from UHF voice receiver No. 1 are carried throughout the capsule communication system on a shielded, twisted pair of conductors so that noise and interference pickup will be kept to a minimum.

(2). One of the audio outputs of UHF voice receiver No. 1 is fed through pins G and H of plug P4023 to terminals 1 and 2 of terminal board TB4701 on the dual speaker panel. This audio signal is fed through contacts 5 and 1 and contacts 10 and 6 of switch S4701A to contacts 4 and 8 of switch S4703. Resistor R4701, connected between contacts 2, 3, 4 and contacts 7, 8, 9 of switch S4701A, terminates the audio signal from UHF voice receiver No. 1 when the audio signal from UHF voice receiver No. 2 is being monitored. From contacts 1 and 2 and contacts 5 and 6 of switch S4703, the audio signal is fed through volume control R4701 and audio transformer T4701 to the No. 1 speaker. Resistor R4710, connected between contacts 3 and 7 of switch S4703, terminates the audio signal from the UHF voice receivers when the audio signal from the HF voice receivers is being monitored.

(3). The second audio output of UHF voice receiver No. 1 is fed through pins I and N of plug P4025 to terminals 13 and 14 on the distribution panel. The audio signal is then fed through an H-pad matching attenuator to terminals 16 and 17 on the distribution panel and applied to terminals 6 and 7 of terminal board TB4003. The H-pad, composed of resistors R4001 through R4005, functions as a constant impedance (600 ohms) network providing approximately 16-DB attenuation of the audio signal. From terminals 6 and 7 of terminal board TB4003, the audio signal is applied to terminals 6 and 7 of terminal board TB1001 at the communication technician's console and then applied to the attenuator AT1001. Signal presence indicator A1003 is parallel with the incoming audio signal. Refer to paragraph 4-2.J. for an explanation of the signal presence indicator circuits. Phone jacks J1001 and J1002 are provided for monitoring the input and output of attenuator AT1001. Attenuator AT1001 provides 20-DB attenuation of the audio signal in 1-DB steps. It should be noted that the DB

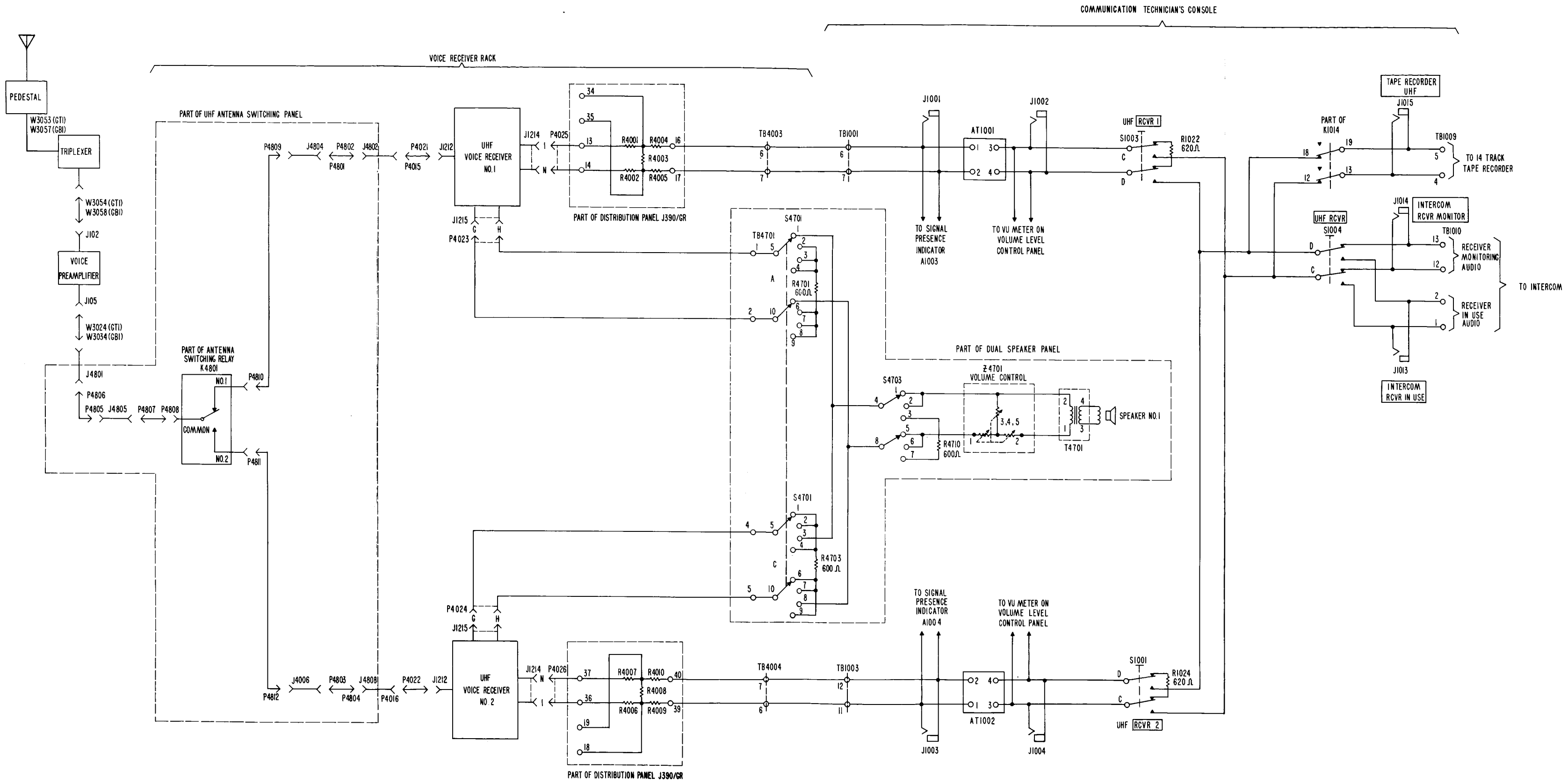

GBI.

GTI.

Figure 4-17. Signal Flow of UHF Voice Receiving System (GBI, GTI), Simplified Schematic

indication stencilled on the attenuator progresses from 0 to 20 in a clockwise direction. With the attenuator set to 20 DB (fully clockwise), 0-DB attenuation is provided, and with the attenuator set to 0 DB (fully counterclockwise), 20-DB attenuation is provided. The output of attenuator AT1001 can also be monitored on the volume level control panel (figure 3-25) by depressing "UHF RCVR 1" button on the auxiliary control panel (figure 3-24). The audio signal from attenuator AT1001 is applied to terminals C and D of UHF "RCVR 1" switch S1003. If switch S1003 is in the de-energized position, the audio signal is terminated by resistor R1022. However, if switch S1003 is energized, the audio signal is applied through the switch contacts to terminals C and D of "UHF RCVR" switch S1004. If switch S1004 is de-energized, the audio signal is applied to terminals 12 and 13 of terminal board TB1010. It is then fed into the intercom system for monitoring. "INTERCOM RCVR MONITOR" jack J1014 is provided for monitoring the audio signal before being fed into the intercom system. However, if switch S1004 is energized the audio signal is applied to terminals 1 and 2 of terminal board TB1010. It is then fed into the intercom system for use instead of monitoring purposes. "INTERCOM RCVR IN USE" jack J1013 is provided for monitoring the audio signal before being fed into the intercom system. When switch S1003 is in the energized position, the audio signal is also fed through contacts 18 and 19 and contacts 12 and 13 of relay K1014 to terminals 4 and 5 of terminal board TB1009. The audio signal is then fed to the 14-track tape recorder. "TAPE RECORDER UHF" jack J1015 is provided for monitoring the audio signal before being fed to the tape recorder.

4-4. SYSTEM OPERATION OF HF VOICE RECEIVING SYSTEM

A. GENERAL

(1). The HF voice receiving system consists of two HF antenna arrays and two HF voice receivers employed as a dual space-diversity receiving system. The Bermuda and Point Arguella sites also contain two receiver audio line amplifiers. The GBI and the GTI sites are not equipped with the space-diversity features. Each HF antenna array consists of a dipole and reflector mounted on a ground plane with either a left- or right-hand UHF quad-helix array. One antenna array is used to feed each HF voice receiver; so the two HF voice receiving systems are complete and separate within themselves. Although both the UHF and the HF receiving systems employ a dual space-diversity feature, there is a major difference in the functional operation of this feature between the two systems. Because of the diversity combiner

in the UHF receiving system, the signal-to-noise ratio is at least as good as the better of the two input signal-to-noise ratios. However, the HF receiving system does not contain a diversity combiner. The audio signal from both HF receivers is automatically combined by interconnecting the diode load and AGC circuits of the two receivers. The resulting audio output will then be the best of the two HF receiving systems. The following paragraphs describe the HF voice receiver signal flow for the various sites.

B. SIGNAL FLOW AT TYPICAL SITES

(1). As shown in figure 4-18, the signal flow for both HF receivers is very similar except for symbol numbers. Therefore, only the signal flow for the HF voice receiver No. 1 will be discussed.

The RF signal received by HF antenna No. 1 is fed to jack J4801 on the HF antenna switching panel via a 50-ohm coaxial cable (RG-213/U). From jack J4801, the RF signal is fed through the antenna switching panel via a patch cable and applied to ANTENNA jack J104 on the rear of HF voice receiver No. 1. The HF voice receiver amplifies and detects the RF signal arriving from the HF dipole antenna. Switching between the diversity mode and single receiver operation is done remotely at the communication technician's console. Refer to paragraph 4-2.D. for an explanation of the HF voice receiver remote control circuits. The two audio signal outputs from HF voice receiver No. 1, and also receiver No. 2, are carried throughout the capsule communication system on a shielded, twisted pair of conductors so that noise and interference pickup will be kept to a minimum.

(2). One of the audio outputs of HF voice receiver No. 1 is taken from terminals 6 and 7 of terminal board TB102 and applied to terminals 9 and 10 of terminal board TB4701 on the dual speaker panel. This audio signal is fed through contacts 5 and 1 and contacts 10 and 6 of switch S4702 A to contacts 4 and 8 of switch S4703. Resistor R4705, connected between contacts 2, 3, 4 and contacts 7, 8, 9 of switch S4702A, terminates the audio signal from HF voice receiver No. 1 when the audio signal from HF voice receiver No. 2 is being monitored. From contacts 2 and 3 and contacts 6 and 7 of switch S4703, the audio signal is fed through volume control Z4702 and audio transformer T4702 to the No. 2 speaker. The second audio output of HF voice receiver No. 1 is taken from terminals 10 and 13 of terminal board TB103 and applied to terminals 11 and 12 of terminal board TB4003. This audio signal is applied to terminals 6 and 7 of terminal board TB1003 at the communication technicians

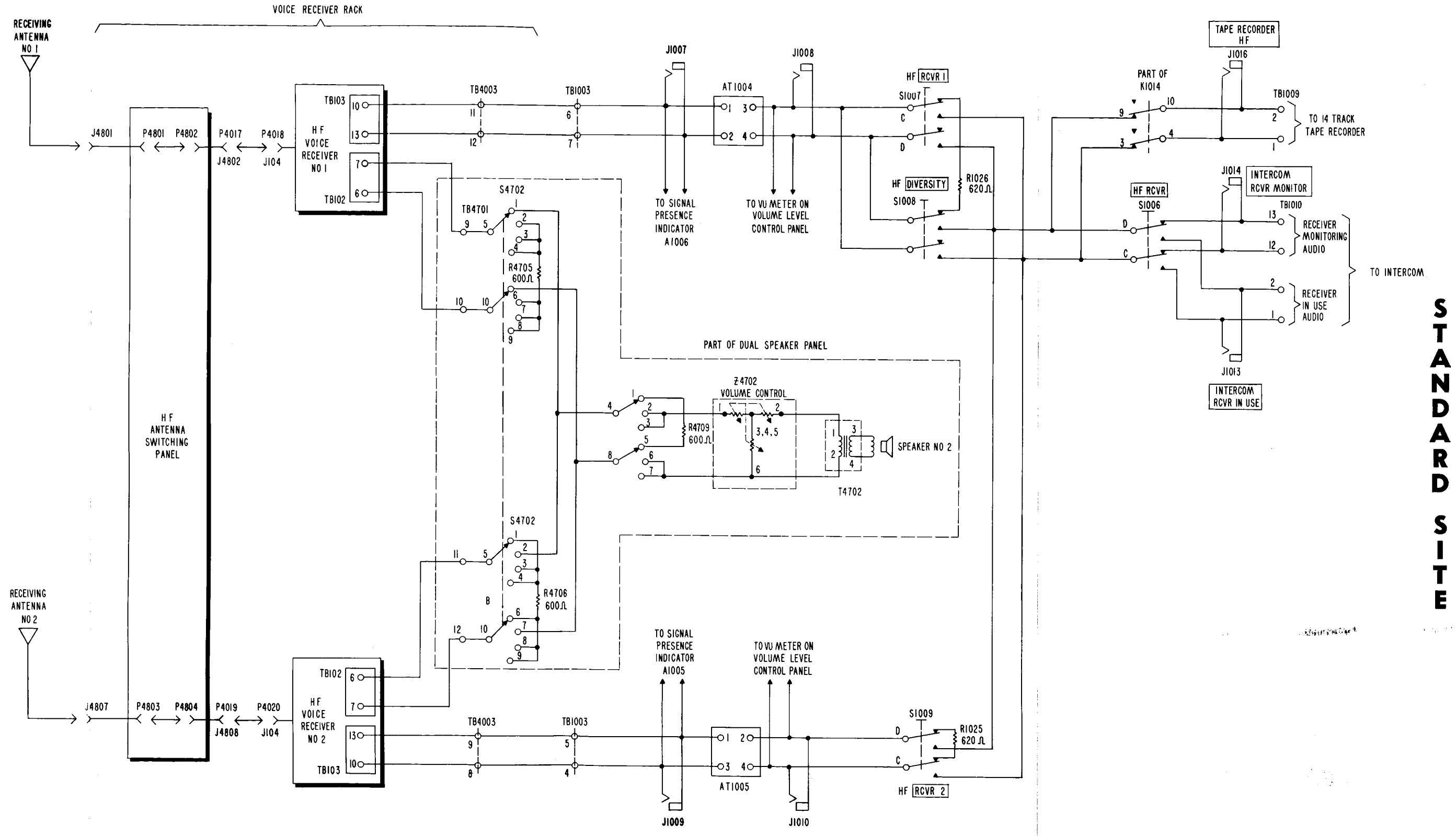

STANDARD SITE

Figure 4-18. Signal Flow of HF Voice Receiving System (Typical Site), Simplified Schematic

console and fed to attenuator AT1004. Signal presence indicator A1006 is paralleled with the incoming audio signal. Refer to paragraph 4-2.J. for an explanation of the signal presence indicator circuits. Phone jacks J1007 and J1008 are provided for monitoring the input and output of attenuator AT1004. Attenuator AT1004 provides 20-DB attenuation of the audio signal in 1-DB steps. It should be noted that the DB indication stencilled on the attenuator progresses from 0 to 20 in a clockwise direction. With the attenuator set to 20 DB (fully clockwise), 0-DB attenuation is provided, and with the attenuator set to 0 DB (fully counterclockwise), 20-DB attenuation is provided. By depressing "HF RCVR 1" button on the auxiliary control panel (figure 3-24), the output at AT1004 can be monitored on the volume level control panel (figure 3-25). The audio signal from the output of attenuator AT1004 is applied to terminals C and D of HF "RCVR 1" switch S1007 and terminals C and D of HF "DIVERSITY" switch S1008. If switches S1007 and S1008 are in the de-energized position, the audio signal is terminated by resistor R1026. However, if switch S1007 or switch S1008 is energized, the audio signal is applied through the switch contacts to terminals C and D of "HF RCVR" switch S1006. It should be remembered that the switch holding circuits prevent more than one switch from being energized at a time. If switch S1006 is de-energized, the audio signal is applied to terminals 12 and 13 of terminal board TB1010. It is then fed into the intercom system for monitoring. "INTERCOM RCVR MONITOR" jack J1014 is provided for monitoring the audio signal before being fed into the intercom system. However, if switch S1006 is energized, the audio signal is applied to terminals 1 and 2 of terminal board TB1010. It is then fed into the intercom system for use instead of monitoring purposes. Again, "INTERCOM RCVR IN USE" jack J1013 is provided for monitoring the audio signal before being fed into the intercom system. When switches S1007 or S1008 are in the energized position, the audio signal is also fed through contacts 9 and 10 and contacts 3 and 4 of relay K1014 to terminals 1 and 2 of terminal board TB1009. The audio signal is then fed to the 14-track tape recorder. "TAPE RECORDER HF" jack J1016 is provided for monitoring the audio signal before being fed to the tape recorder.

C. SIGNAL FLOW AT CAPE CANAVERAL

(1). As shown in figure 4-19, the signal flow for both HF receivers is very similar except for symbol numbers. Therefore, only the signal flow for the HF voice receiver No. 1 will be discussed. The RF signal received by HF antenna No. 1 is fed to jack J4801 on the HF antenna switching panel via 50-ohm coaxial cable

(RG-213/U). From jack J4801, the RF signal is fed through the HF antenna switching panel via a patch cable and applied to ANTENNA jack J104 on the rear of HF voice receiver No. 1. The HF voice receiver amplifies and detects the RF signal arriving from the HF dipole antenna. Switching between the diversity mode and single receiver operation is done remotely at the communication technician's console. Refer to paragraph 4-2.D. for an explanation of the HF voice receiver remote control circuits. The two audio signal outputs from HF voice receiver No. 1, and also receiver No. 2, are carried throughout the capsule communication system on a shielded, twisted pair of conductors so that noise and interference pickup will be kept to a minimum.

(2). One of the audio outputs of HF voice receiver No. 1 is taken from terminals 6 and 7 of terminal board TB102 and applied to terminals 9 and 10 of terminal board TB4701 on the dual speaker panel. This audio signal is fed through contacts 5 and 1 and contacts 10 and 6 of switch S4702A to contacts 4 and 8 of switch S4703. Resistor R4705, connected between contacts 2, 3, 4 and contacts 7, 8, 9 of switch S4702A, terminates the audio signal from HF voice receiver No. 1 when the audio signal from HF voice receiver No.2 is being monitored. From contacts 2 and 3 and contacts 6 and 7 of switch S4703, the audio signal is fed through volume control Z4702 and audio transformer T4702 to the No. 2 speaker. The second audio output of HF voice receiver No. 1 is taken from terminals 10 and 13 of terminal board TB103 and applied to terminals 11 and 12 of terminal board TB4003. This audio signal is applied to terminals 6 and 7 of terminal board TB1003 at the communication technician's console and fed to attenuator AT1004. Signal presence indicator A1006 is paralleled with the incoming audio signal. Refer to paragraph 4-2.J. for an explanation of the signal presence indicator circuits. Phone jacks J1007 and J1008 are provided for monitoring the input and output of attenuator AT1004. Attenuator AT1004 provides 20-DB attenuation of the audio signal in 1-DB steps. It should be noted that the DB indication stencilled on the attenuator progresses from 0 to 20 in a clockwise direction. With the attenuator set to 20 DB (fully clockwise), 0-DB attenuation is provided, and with the attenuator set to 0 DB (fully counterclockwise), 20-DB attenuation is provided. By depressing "HF RCVR 1" button on the auxiliary control panel (figure 3-24), the output of AT1004 can be monitored on the volume level control panel (figure 3-25). The audio signal from the output of attenuator AT1004 is applied to terminals C and D of HF "RCVR 1" switch S1007 and terminals C and D of HF "DIVERSITY" switch S1008. If switches S1007 and S1008 are in the de-energized position, the audio signal is

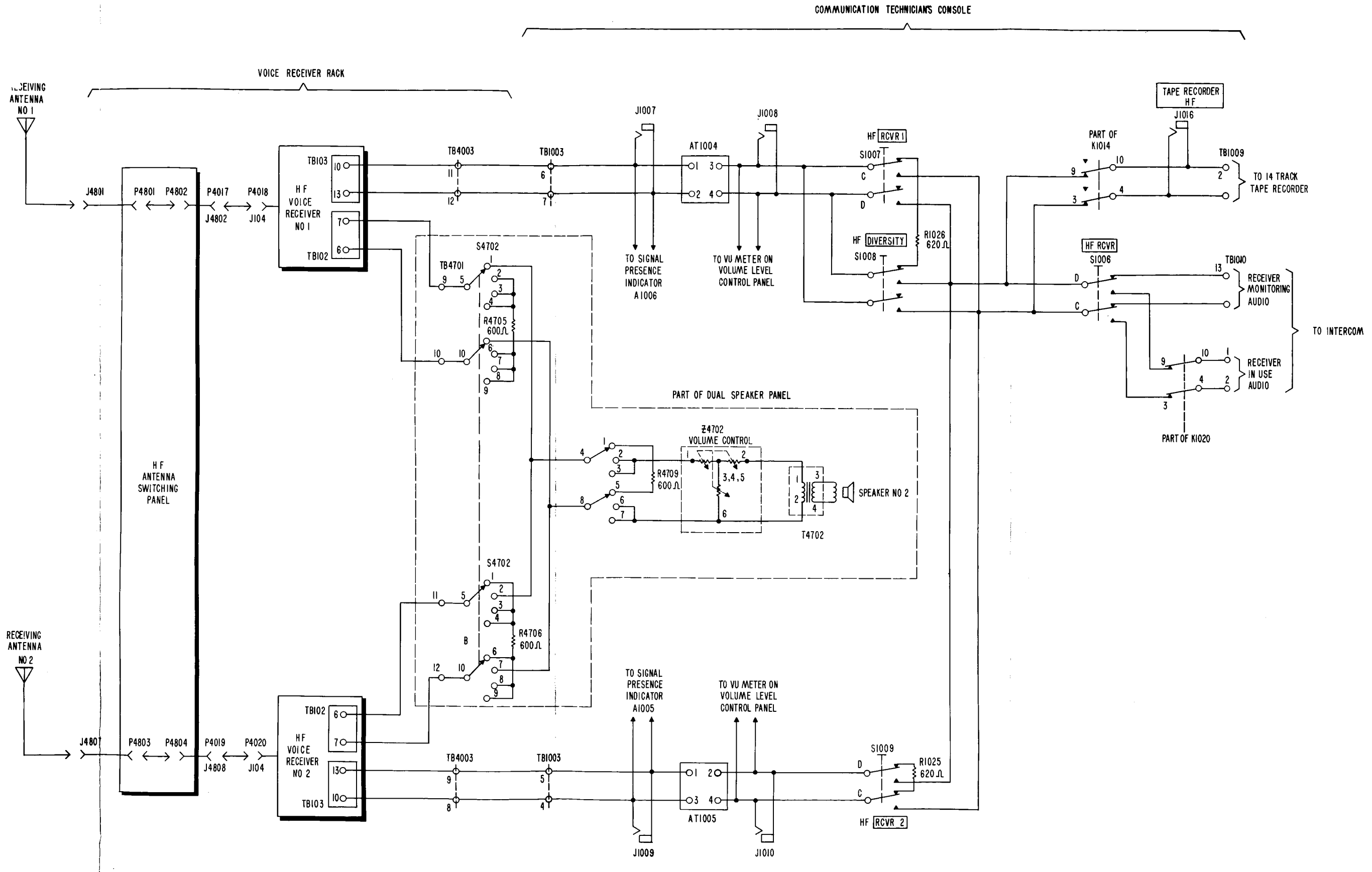

Figure 4-19. Signal Flow of HF Voice Receiving System (Cape Canaveral), Simplified Schematic

CAPE CANAVERAL

terminated by resistor R1026. However, if switch S1007 or switch S1008 is energized, the audio signal is applied through the switch contacts to terminals C and D of "HF RCVR" switch S1006. It should be remembered that the switch holding circuits prevent more than one switch from being energized at a time. If switch S1006 is de-energized, the audio signal is applied to terminals 12 and 13 of terminal board TB1010 and then fed into the intercom system for monitoring. However, if switch S1006 is energized, the audio signal is fed through contacts 9 and 10 and contacts 3 and 4 of relay K1020 and then applied to terminals 1 and 2 of terminal board TB1010. It is then fed into the intercom system for use instead of monitoring purposes. When switches S1007 or S1008 are in the energized position, the audio signal is also fed through contacts 9 and 10 and contacts 3 and 4 of relay K1014 to terminals 1 and 2 of terminal board TB1009. The audio signal is then fed to the 14-track tape recorder. "TAPE RECORDER HF" jack J1016 is provided for monitoring the audio signal before being fed to the tape recorder.

D. SIGNAL FLOW AT BERMUDA

(1). As shown in figure 4-20, the signal flow for both HF receivers is very similar except for symbol numbers. Therefore, only the signal flow for the HF voice receiver No. 1 will be discussed. The RF signal received by HF antenna No. 1 is fed to jack J4801 on the antenna switching panel via a 50-ohm coaxial cable (RG-213/U). From jack J4801, the RF signal is fed through the antenna switching panel via a patch cable and applied to ANTENNA jack J104 on the rear of HF voice receiver No. 1. The HF voice receiver amplifies and detects the RF signal arriving from the HF dipole antenna. Switching between the diversity mode and single receiver operation is done remotely at the communication technician's console. Refer to paragraph 4-2.D. for an explanation of the HF voice receiver remote control circuits. The two audio signal outputs from HF voice receiver No. 1, and also receiver No. 2, are carried throughout the capsule communication system on a shielded, twisted pair of conductors so that noise and interference pickup will be kept to a minimum.

(2). One of the audio outputs of HF voice receiver No. 1 is taken from terminals 6 and 7 of terminal board TB102 and applied to terminals 9 and 10 of terminal board TB4701 on the dual speaker panel. This audio signal is fed through contacts 5 and 1 and contacts 10 and 6 of switch S4702A to contacts 4 and 8 of switch S4703. Resistor R4705, connected between contacts 2, 3, 4 and contacts 7, 8, 9 of

switch S4702A, terminates the audio signal from HF voice receiver No. 1 when the audio signal from HF voice receiver No. 2 is being monitored. From contacts 2 and 3 and contacts 6 and 7 of switch S4703, the audio signal is fed through volume control Z4702 and audio transformer T4702 to the No. 2 speaker. The second audio output of HF voice receiver No. 1 is taken from terminals 10 and 13 of terminal board TB103 and applied to terminals 11 and 12 of terminal board TB4003. This audio signal is applied to terminals 6 and 7 of terminal board TB1003 at the communication technician's console and then fed through audio amplifier A1018. By depressing "HF RCVR 1" button-on the auxiliary control panel (figure 3-24), the output of audio amplifier A1018 can be monitored on the volume level control panel (figure 3-25). Signal presence indicator A1006 is paralleled with the output of audio amplifier A1018. Refer to paragraph 4-2.J. for an explanation of the signal presence indicator circuits. The audio signal from audio amplifier A1018 is applied to terminals C and D of HF "RCVR 1" switch S1007 and terminals C and D of HF "DIVERSITY" switch S1008. If switches S1007 and S1008 are in the de-energized position, the audio signal is terminated by resistor R1026. However, if switch S1007 or switch S1008 is energized, the audio signal is applied through the switch contacts to terminals C and D of "HF RCVR" switch S1006. It should be remembered that the switch holding circuits prevent more than one switch from being energized at a time. If switch S1006 is de-energized, the audio signal is applied to terminals 12 and 13 of terminal board TB1010 and fed into the intercom system for monitoring. However, if switch S1006 is energized, the audio signal is applied to terminals 1 and 2 of terminal board TB1010 and fed into the intercom system for use instead of monitoring purposes. When switch S1007 or S1008 is in the energized position, the audio signal is also fed through contacts 9 and 10 and contacts 3 and 4 of relay K1014 to terminals 1 and 2 of terminal board TB1009. The audio signal is then fed to the 14-track tape recorder.

E. SIGNAL FLOW AT GRAND BAHAMA AND GRAND TURK ISLANDS

(1). As shown in figure 4-21, the signal flow for both HF receivers is very similar except for symbol numbers. Therefore, only the signal flow for the HF voice receiver No. 1 will be discussed. Since diversity operation is not provided at GBI and GTI, the RF signal is received by a single antenna instead of two antennas. The RF signal received by the HF antenna is fed to jack J4801 on the HF antenna switching panel via a 50-ohm coaxial cable (RG-213/U). From jack J4801, the RF signal is fed through the HF antenna switching panel via the various patch cables and

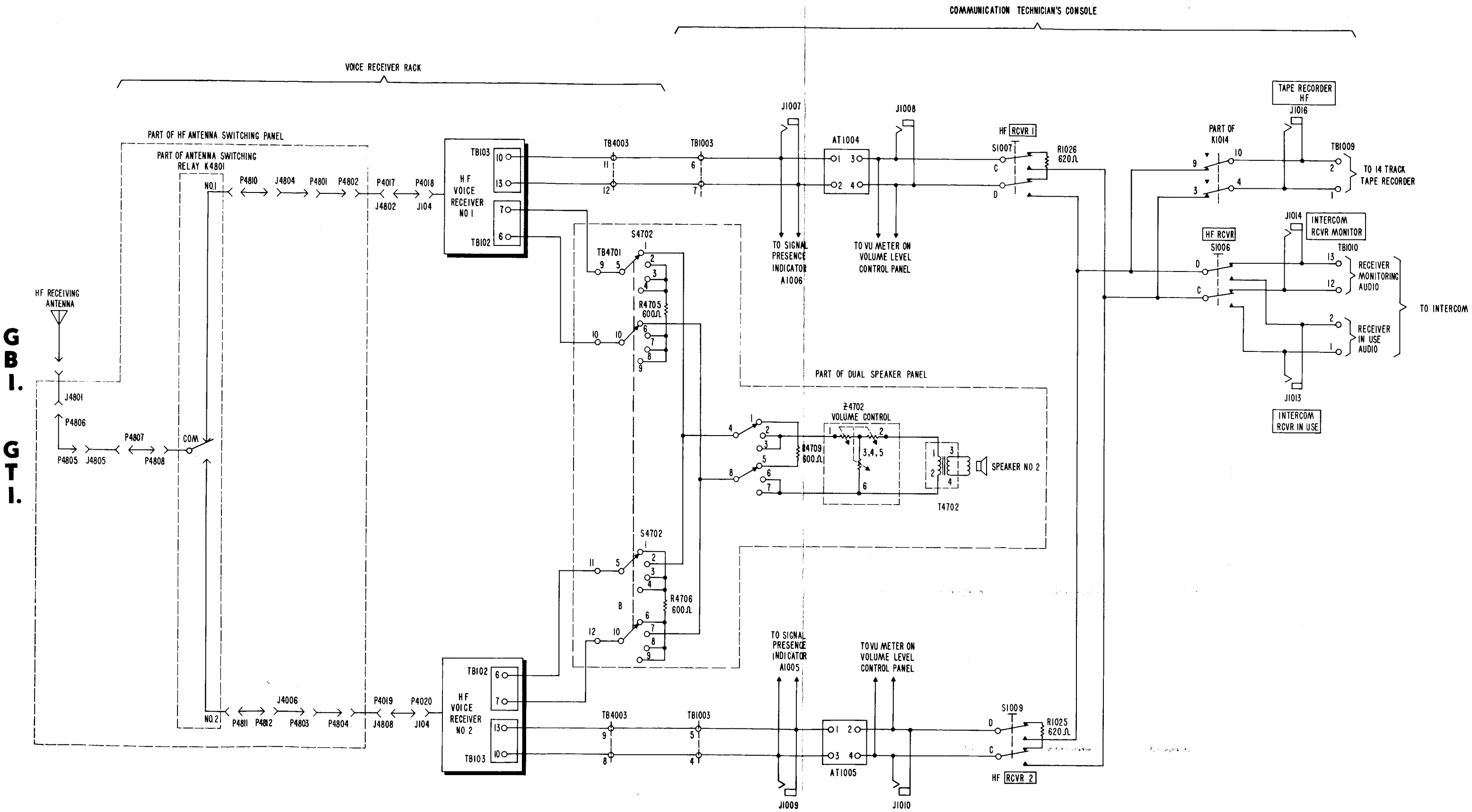

Figure 4-21. Signal Flow of HF Voice Receiving System (GBI, GTI), Simplified Schematic

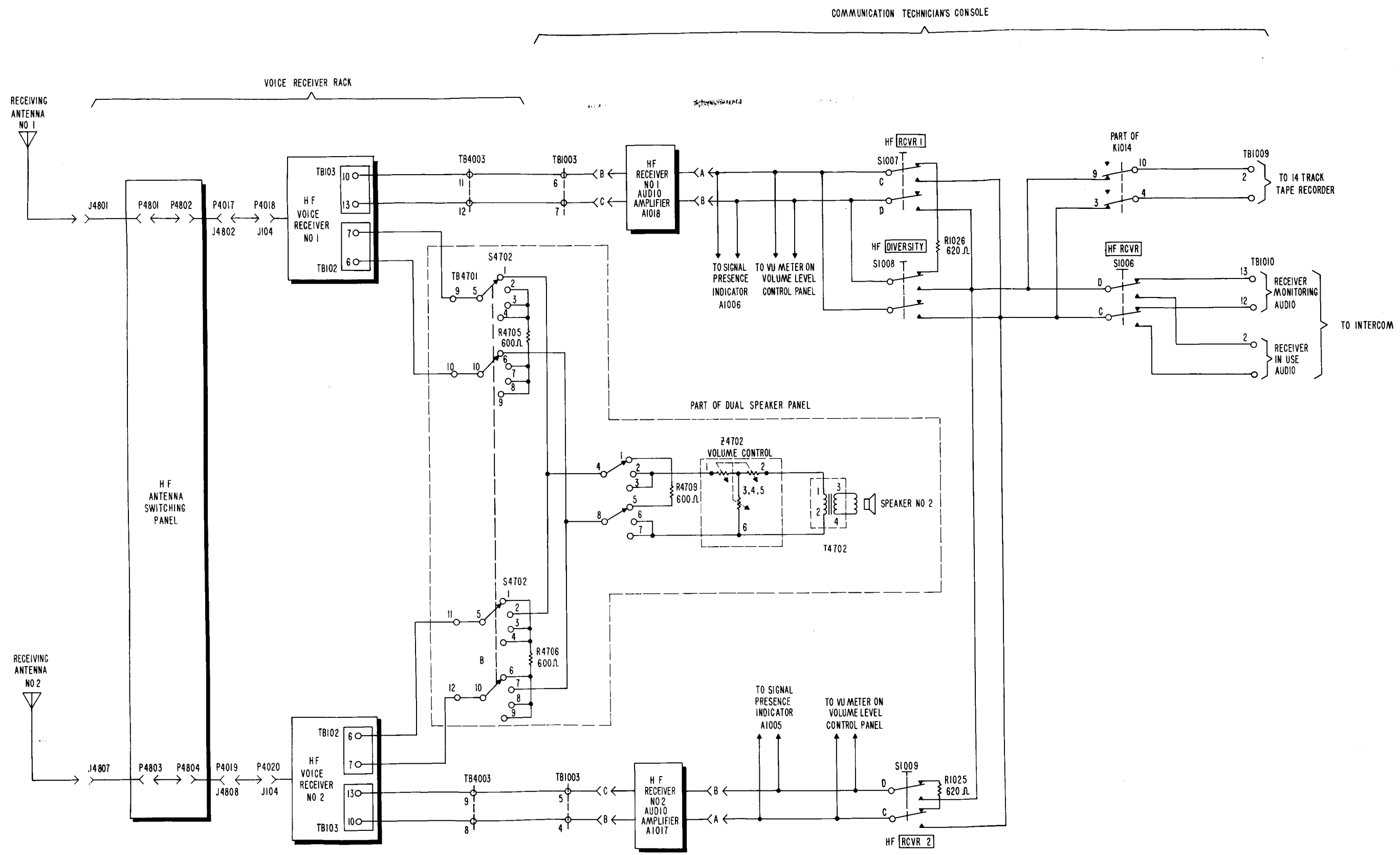

Figure 4-20. Signal Flow of HF Voice Receiving System (Bermuda) Simplified Schematic

BERMUDA

the contacts of antenna switching relay K4801 to ANTENNA jack J104 on the rear of HF voice receiver No. 1. (When it is desired to use HF voice receiver No. 2, antenna switching relay K4801 is energized so that the RF signal is fed to ANTENNA jack J104 on the rear of HF voice receiver No. 2.) The two audio signal outputs from HF voice receiver No. 1, and also receiver No. 2, are carried throughout the capsule communication system on a shielded, twisted pair of conductors so that noise and interference pickup will be kept to a minimum.

(2). One of the audio outputs of HF voice receiver No. 1 is taken from terminals 6 and 7 of terminal board TB102 and applied to terminals 9 and 10 of terminal board TB4701 on the dual speaker panel. This audio signal is fed through contacts 5 and 1 and contacts 10 and 6 of switch S4702A to contacts 4 and 8 of switch S4703. Resistor R4705, connected between contacts 2, 3, 4 and contacts 7, 8, 9 of switch S4702A, terminates the audio signal from HF voice receiver No. 1 when the audio signal from HF voice receiver No. 2 is being monitored. From contacts 2 and 3 and contacts 6 and 7 of switch S4703, the audio signal is fed through volume control Z4702 and audio transformer T4702 to the No. 2 speaker. The second audio output of HF voice receiver No. 1 is taken from terminals 10 and 13 of terminal board TB103 and applied to terminals 11 and 12 of terminal board TB4003. This audio signal is applied to terminals 6 and 7 of terminal board TB1003 at the communication technician's console and fed to attenuator AT1004. Signal presence indicator A1006 is paralleled with the incoming audio signal. Refer to paragraph 4-2.J. for an explanation of the signal presence indicator circuits. Phone jacks J1007 and J1008 are provided for monitoring the input and output of attenuator AT1004. Attenuator AT1004 provides 20-DB attenuation of the audio signal in 1-DB steps. It should be noted that the DB indication stencilled on the attenuator progresses from 0 to 20 in a clockwise direction. With the attenuator set to 20 DB (fully clockwise), 0-DB attenuation is provided, and with the attenuator set to 0 DB (fully counterclockwise), 20-DB attenuation is provided. By depressing "HF RCVR 1" button on the auxiliary control panel (figure 3-22), the output of AT1004 can be monitored on the volume level control panel (figure 3-23). The audio signal from the output of attenuator AT1004 is applied to terminals C and D of HF "RCVR 1" switch S1007. If switch S1007 is in the de-energized position, the audio signal is terminated by resistor R1026. However, if switch S1007 is energized, the audio signal is applied through the switch contacts to terminals C and D of "HF RCVR" switch S1006. If switch S1006 is de-energized,

the audio signal is applied to terminals 12 and 13 of terminal board TB1010. It is then fed into the intercom system for monitoring. "INTERCOM RCVR MONITOR" jack J1014 is provided for monitoring the audio signal before being fed into the intercom system. However, if switch S1006 is energized, the audio signal is applied to terminals 1 and 2 of terminal board TB1010. It is then fed into the intercom system for use instead of monitoring purposes. Again, "INTERCOM RCVR IN USE" jack J1013 is provided for monitoring the audio signal before being fed into the intercom system. When switch S1007 is in the energized position, the audio signal is also fed through contacts 9 and 10 and contacts 3 and 4 of relay K1014 to terminals 1 and 2 of terminal board TB1009. The audio signal is then fed to the 14-track tape recorder. "TAPE RECORDER HF" jack J1016 is provided for monitoring the audio signal before being fed to the tape recorder.

4-5. SYSTEM OPERATION OF UHF VOICE TRANSMITTER REMOTE CONTROL CIRCUITS

A. GENERAL

Remote control functions of the UHF voice transmitter consist of keying, modulating, sidetone and carrier presence monitoring, and selection between master and standby UHF voice transmitter operation. Refer to figure 4-22 for the simplified schematic of the UHF voice transmitter remote control circuitry for those sites using command control equipment or refer to figure 4-23 for those sites which do not use command control equipment.

B. OPERATION

(1). As shown in figure 4-22 or figure 4-23, pressing the "push-to-talk" switch in the intercom system completes the ground path through terminal 11 of terminal board TB1010 for the "REMOTE KEYING" relay K1005. When relay K1005 is energized, the 28-volt DC path for "RECORDER-SELECT" relay K1014 is completed through contacts 7 and 8 of relay K1005. This energizes relay K1014 so that the modulating audio of the UHF voice transmitter instead of the voice receiver audio will be applied to the 14-track tape recorder. Also, when "REMOTE-KEYING" relay K1005 and "UHF SELECT" relay K1003 are energized simultaneously, a ground path for the push-to-talk relay in the master and the standby UHF voice transmitters is completed. For the master transmitter the ground path is from pin D of jack J505 to terminal 3 of terminal board TB2005, to terminal 9 of terminal board TB1004 in

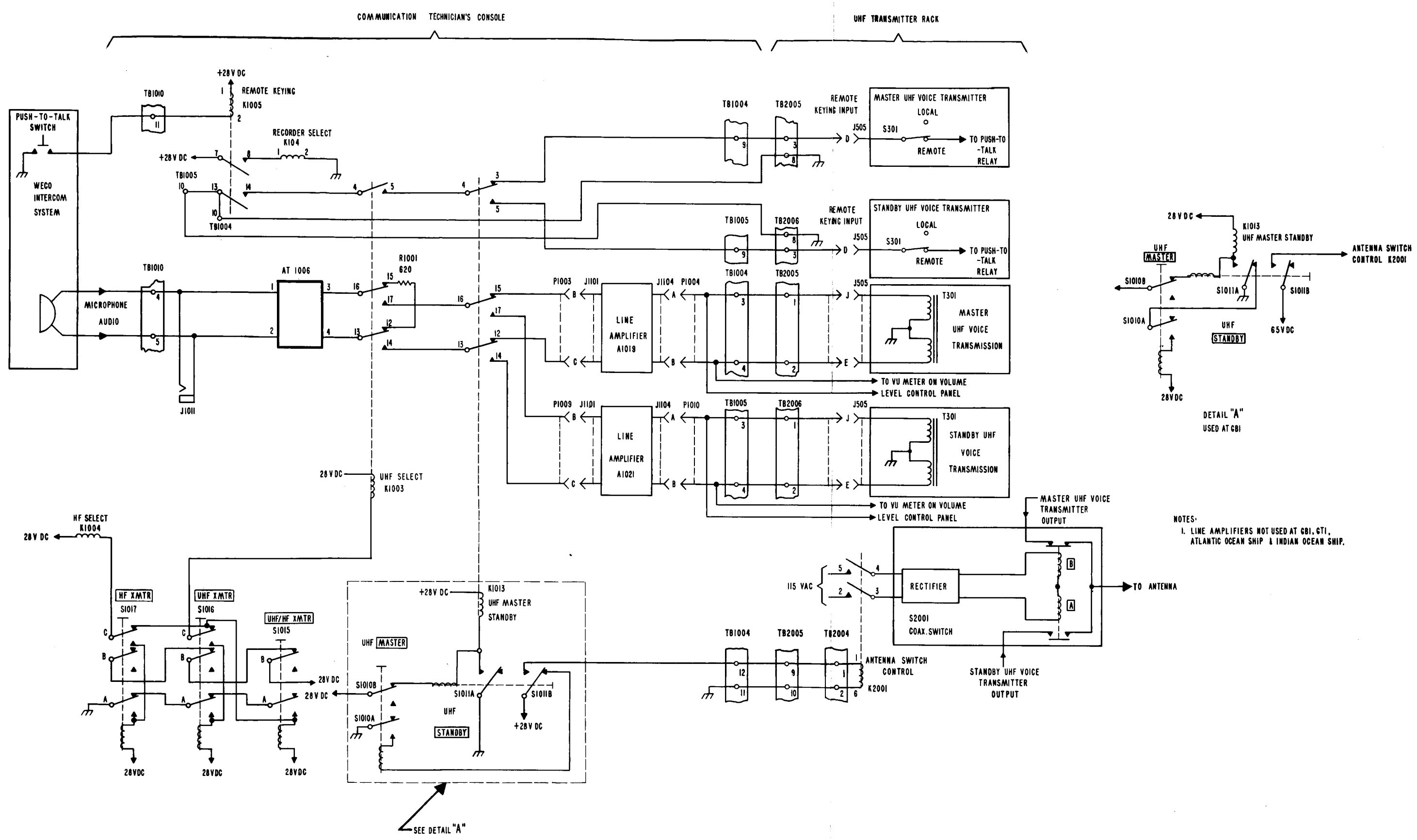

Figure 4-23. UHF Transmitter Remote Control (Non-Command Sites), Simplified Schematic

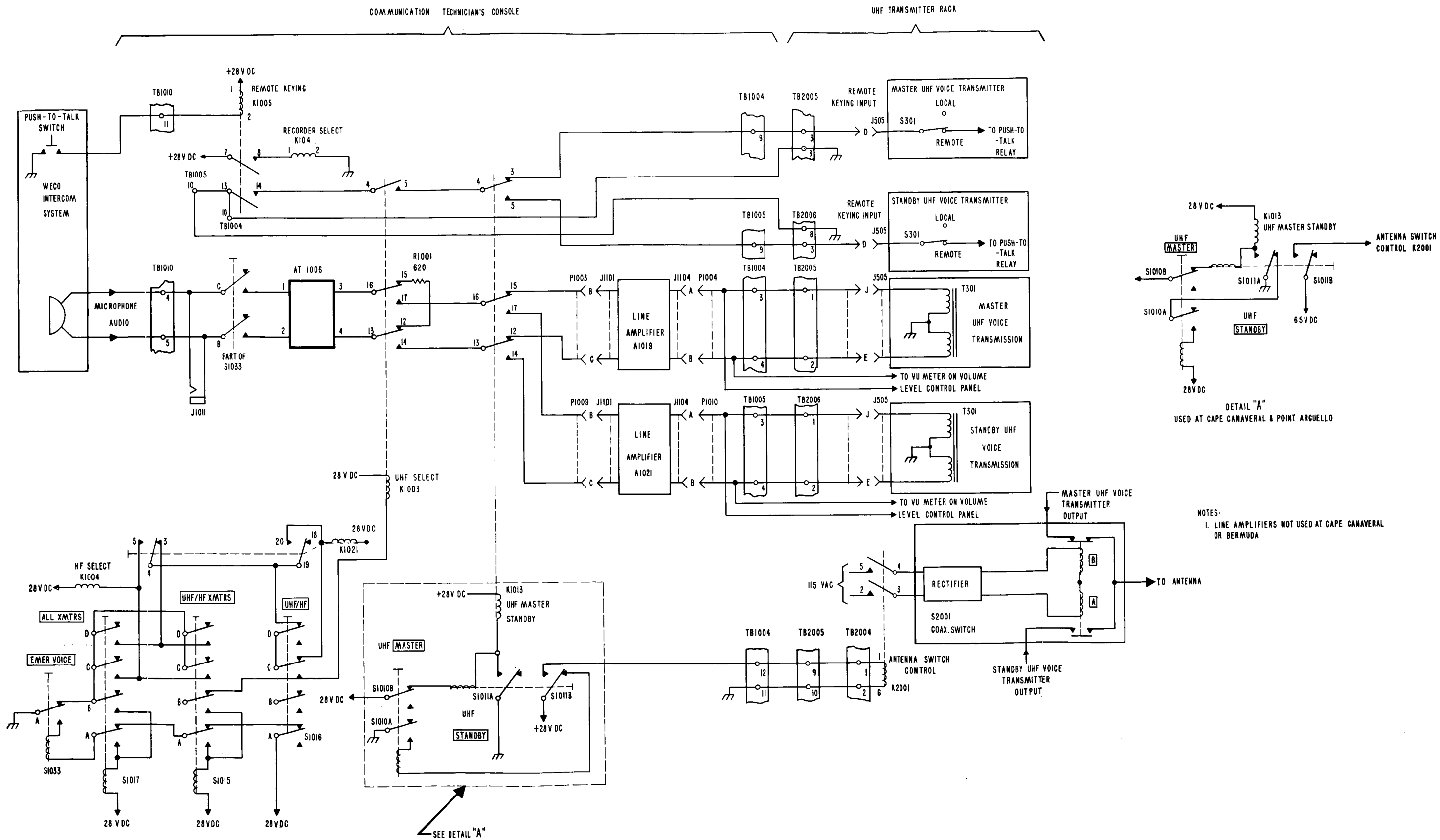

Figure 4-22. UHF Transmitter Remote Control (Command Sites), Simplified Schematic

the communication technician's console, through contacts 3 and 4 of relay K1013, through contacts 4 and 5 of relay K1003, through contacts 13 and 14 of relay K1005 to terminal 10 of terminal board TB1004 and back to terminal 8 of terminal board TB2005 in the UHF transmitter rack. For the standby transmitter, the ground path is from pin D of jack J505 to terminal 3 of terminal board TB2006 to terminal 9 of terminal board TB1005 in the communication technician's console, through contacts 4 and 5 of relay K1013, through contacts 4 and 5 of relay K1003, through contacts 13 and 14 of relay K1005 to terminal 10 of terminal board TB1005 and back to terminal 8 of terminal board TB2006 in the UHF transmitter rack.

(2). The microphone audio from the intercom system is fed to terminals 4 and 5 of terminal board TB1010 and through the contacts of "EMER VOICE" switch S1033 (at command control sites) to terminals 1 and 2 of attenuator AT1006. Attenuator AT1006 is an H-pad with approximately 6 DB of attenuation. Its main purpose is to match the 600-ohm input with two 600-ohm outputs. (The 600-ohm output for the HF voice transmitter is shown in figures 4-24 and 4-25.) Jack J1011 is provided for monitoring the microphone audio at the communication technician's console. The audio output from terminals 3 and 4 of attenuator AT1006 is terminated by resistor R1001 which is connected between contacts 12 and 15 of "UHF SELECT" relay K1003. When "UHF-HF XMTR" switch S1016 or "UHF/HF XMTR" switch S1015 is depressed, a ground path is completed and "UHF SELECT" relay K1003 is energized and latched. Refer to paragraph 4-2.G. for a discussion of the voice transmitter selection circuits. When relay K1003 is energized, the microphone audio is fed through contacts 16 and 17 and contacts 13 and 14 of K1003 to contacts 16 and 13 of "UHF MASTER - STANDBY" relay K1013. When relay K1013 is de-energized, the microphone audio is fed through contacts 15 and 16, and contacts 12 and 13 to pins B and C of jack J1101 on line amplifier A1019. The amplified microphone audio is taken from pins A and B of jack J1104 on line amplifier A1019 and applied to terminals 3 and 4 of terminal board TB1004. Also, by depressing "UHF MAS MIKE" button on the auxiliary control panel (figure 3-24) the output of line amplifier A1019 can be monitored on the volume level control panel (figure 3-25). The microphone audio at terminals 3 and 4 of terminal board TB1004 is fed to terminals 1 and 2 of terminal board TB2005 in the UHF transmitter rack, to pins J and E of jack J505 in the master UHF voice transmitter, and then applied to audio transformer T301. When UHF "STANDBY" switch S1011 is depressed, a ground path is completed through the A

contact of switch S1011 and UHF "MASTER-STANDBY" relay K1013 becomes energized. With relay K1013 energized, the microphone audio is fed through contacts 16 and 17 and contacts 13 and 14 of relay K1013 to pins B and C of jack J1101 on line amplifier A1021. The amplified microphone audio is taken from pins A and B of jack J1104 on line amplifier A1021 and applied to terminals 3 and 4 of terminal board TB1005. Also, by depressing "UHF STBY MIKE" button on the auxiliary control panel (figure 3-24), the output of line amplifier A1021 can be monitored on the volume level control panel (figure 3-25). The microphone audio at terminals 3 and 4 of terminal board TB1005 is fed to terminals 1 and 2 of terminal board TB2006, in the UHF transmitter rack, to pins J and E of jack J505 in the standby UHF voice transmitter, and then applied to audio transformer T301.

(3). When UHF "MASTER-STANDBY" relay K1012 is energized by depressing UHF "STANDBY" switch S1011, "ANTENNA SWITCH CONTROL" relay K2001 in the UHF transmitter rack is energized. This is accomplished by feeding 28 volts DC through the B contact of switch S1011 to terminal 12 of terminal board TB1004. From terminal 12 of terminal board TB1004, this voltage is fed to terminal 9 of terminal board TB2005 in the UHF transmitter rack, to terminal 1 of terminal board TB2004, and then to terminal 1 of relay K2001. The ground path is from terminal 6 of relay K2001 to terminal 2 of terminal board TB2004 to terminal 10 of terminal board TB2005 and then to terminal 11 of terminal board TB1004 in the communication technician's console. When "ANTENNA SWITCH CONTROL" relay K2001 is energized, 115 volts AC is fed through contacts 4 and 5 and contacts 2 and 3 of relay K2001 to the rectifier in coaxial switch S2001. The output voltage from the rectifier is applied across coils A and B of coaxial switch S2001. When coils A and B are energized, the master UHF voice transmitter output is disconnected from the antenna and the standby UHF voice transmitter output is connected to the antenna.

4-6. SYSTEM OPERATION OF HF VOICE TRANSMITTER REMOTE CONTROL CIRCUITS

A. GENERAL

Remote control functions of the HF voice transmitter consist of keying, modulating, sidetone and carrier presence monitoring, channel 1 or channel 2 operation, and, where applicable, selection between master and standby HF voice transmitter operation. Refer to figure 4-24 for the simplified schematic of the HF voice

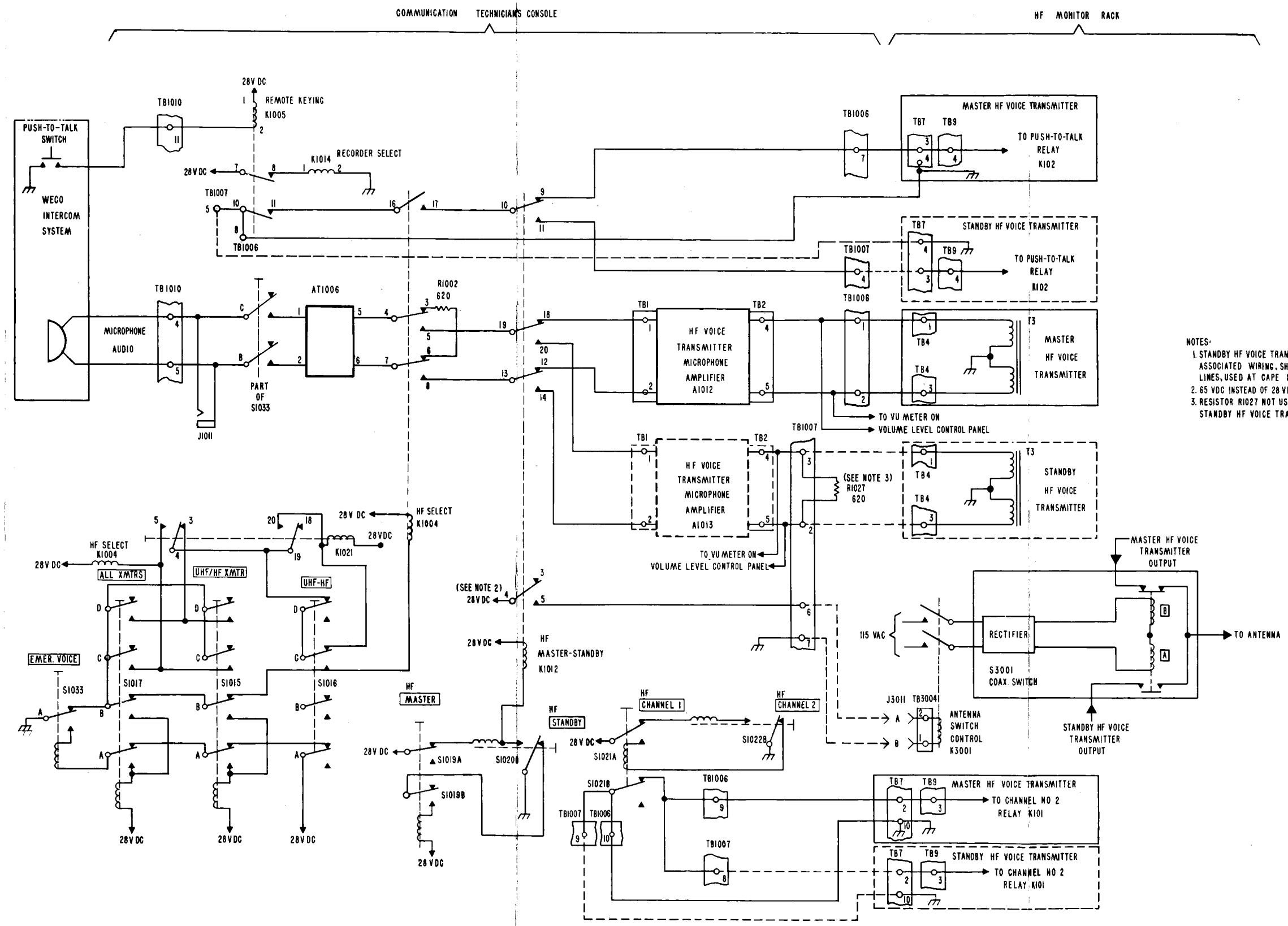

NOTES:
1. STANDBY HF VOICE TRANSMITTER AND ASSOCIATED WIRING, SHOWN IN DOTTED LINES, USED AT CAPE CANAVERAL AND BERMUDA
2. 65 VDC INSTEAD OF 28 VDC USED AT CAPE CANAVERAL AND POINT ARGUELLO
3. RESISTOR R1027 NOT USED WITH STANDBY HF VOICE TRANSMITTER.

Figure 4-24. HF Transmitter Remote Control (Command Sites), Simplified Schematic

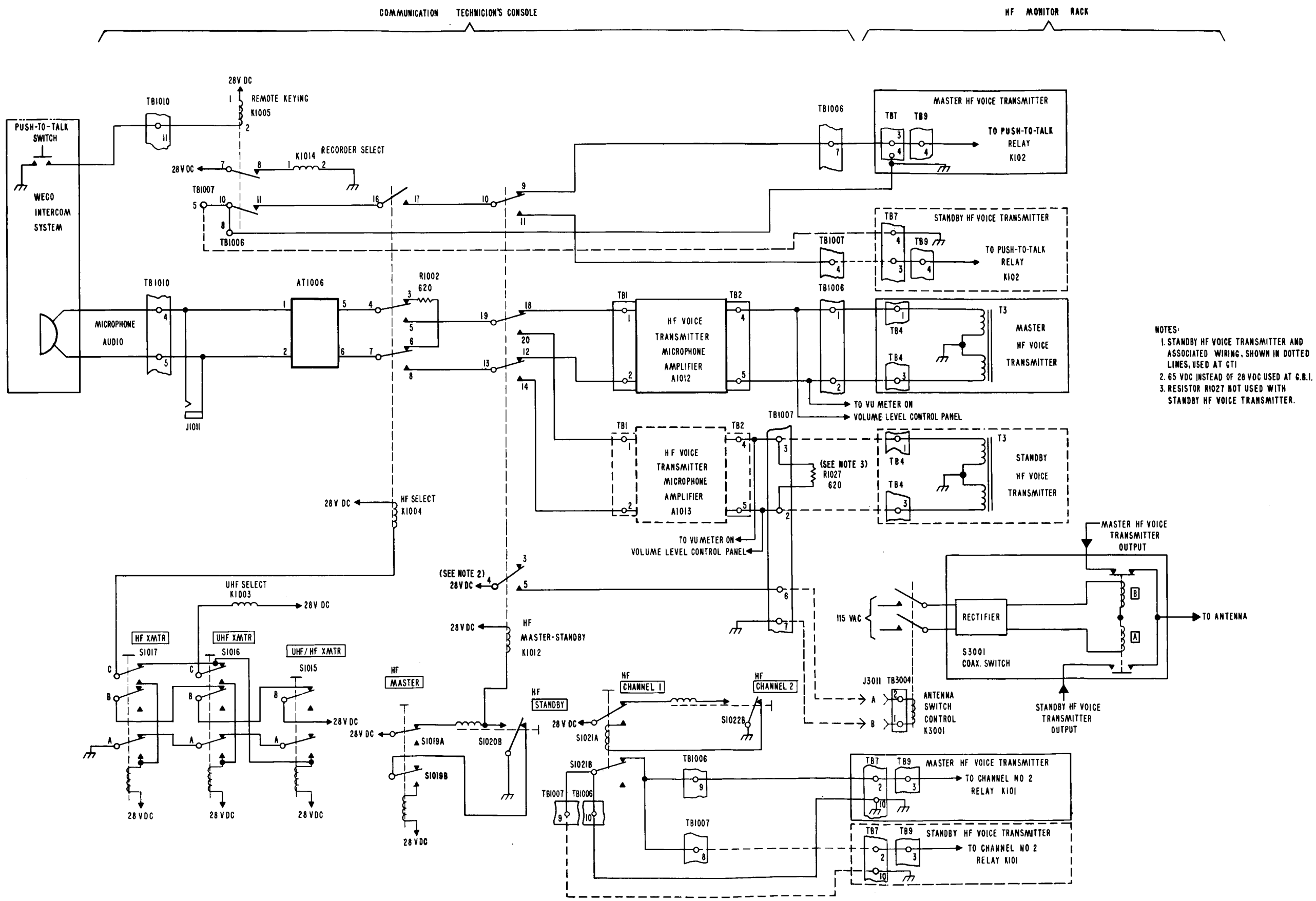

NOTES:
1. STANDBY HF VOICE TRANSMITTER AND ASSOCIATED WIRING, SHOWN IN DOTTED LINES, USED AT CTI
2. 65 VDC INSTEAD OF 28 VDC USED AT G.B.I.
3. RESISTOR R1027 NOT USED WITH STANDBY HF VOICE TRANSMITTER.

Figure 4-25. HF Transmitter Remote Control (Non-Command Sites), Simplified Schematic

transmitter remote control circuitry for those sites using command control equipment or refer to figure 4-25 for those sites which do not use command control equipment.

B. OPERATION

(1). As shown in figure 4-24 or figure 4-25, pressing the push-to-talk switch in the intercom system completes the ground path through terminal 11 of terminal board TB1010 for the "REMOTE KEYING" relay K1005. When relay K1005 is energized, the 28-volt DC path for "RECORDER-SELECT" relay K1014 is completed through contacts 7 and 8 of relay K1005. This energizes relay K1014 so that the modulating audio of the HF voice transmitter instead of the voice receiver audio will be applied to the 14-track tape recorder. Also, when "REMOTE-KEYING" relay K1005 and "HF SELECT" relay K1004 are energized simultaneously, a ground path for the push-to-talk relay K102 in the master and the standby HF voice transmitters is completed through contacts 9 and 10 (contacts 10 and 11 if relay K1012 is energized) of HF "MASTER-STANDBY" relay K1012, contacts 16 and 17 of relay K1004, contacts 10 and 11 of relay K1005 to terminal 8 of terminal board TB1006 , and terminal 5 of terminal board TB1007. The ground path is then completed by connecting these two terminals to terminal 4 of terminal board TB1007 in the master and standby HF voice transmitters.

(2). The microphone audio from the intercom system is fed to terminals 4 and 5 of terminal board TB1010 and through the contacts of "EMER VOICE" switch S1033 (at command control sites) to terminals 1 and 2 of attenuator AT1006. Attenuator AT1006 is an H-pad with approximately 6 DB of attenuation. Its main purpose is to match the 600-ohm input with two 600-ohm outputs. (The 600-ohm output for the UHF voice transmitter is shown in figures 4-22 and 4-23.) Jack J1011 is provided for monitoring the microphone audio at the communication technician's console. The audio output from terminals 5 and 6 of attenuator AT1006 is terminated by resistor R1002 which is connected between contacts 3 and 6 of "HF SELECT" relay K1004. When "ALL XMTRS" switch S1017 or "UHF/HF XMTR" switch S1015 is depressed, a ground path is completed and "HF SELECT" relay K1004 is energized and latched. Refer to paragraph 4-2.G. for a discussion of the voice transmitter selection circuits. When relay K1004 is energized, the microphone audio is fed through contacts 4 and 5 and contacts 7 and 8 of K1004 to contacts 19 and 13 of "HF MASTER-STANDBY" relay K1012. When relay K1012 is de-energized, the microphone audio is fed through

contacts 19 and 18 and contacts 13 and 12 to terminals 1 and 2 of terminal board TB1 on the HF voice transmitter microphone amplifier A1012. The amplified microphone audio from amplifier A1012 is taken from terminals 4 and 5 of terminal board TB1 and applied to terminals 1 and 2 of terminal board TB1006. Also, by depressing "HF MAS MIKE" button on the auxiliary control panel (figure 3-24), the output of amplifier A1012 can be monitored on the volume level control panel (figure 3-25). The microphone audio at terminals 1 and 2 of terminal board TB1006 is fed to terminals 1 and 3 of terminal board TB4 in the master HF voice transmitter and then applied to audio transformer T3. When HF "STANDBY" switch S1020 is depressed, a ground path is completed through the B contact of switch S1020 and HF "MASTER-STANDBY" relay K1012 becomes energized. With relay K1012 energized, the microphone audio is fed through contacts 19 and 20 and contacts 13 and 14 of relay K1012 to terminals 1 and 2 of terminal board TB1 on the HF voice transmitter microphone amplifier A1013. The amplified microphone audio from amplifier A1013 is taken from terminals 4 and 5 of TB2 and applied to terminals 3 and 2 of terminal board TB1007. At those sites where a standby HF voice transmitter is not used, resistor R1027 is installed to terminate the microphone audio. By depressing "HF STBY MIKE" button on the auxiliary control panel (figure 3-22), the output of amplifier A1013 can be monitored on the volume level control panel (figure 3-23). The microphone audio at terminals 3 and 2 of terminal board TB1007 is fed to terminals 1 and 3 of terminal board TB4 in the standby HF voice transmitter and then applied to audio transformer T3.

(3). When HF "MASTER-STANDBY" relay K1012 is energized by depressing HF "STANDBY" switch S1020, "ANTENNA SWITCH CONTROL" relay K3001 in the HF monitor cabinet is energized. This is accomplished by feeding 28 volts DC through contacts 4 and 5 of relay K1012 to terminal 6 of terminal board TB1007, to pin A of jack J3011 in the HF monitor cabinet, to terminal 2 of terminal board TB3004, through the energizing coil of relay K3001 to terminal 1 of terminal board TB3004, and through pin B of jack J3011 to terminal 7 of terminal board TB1007 in the communication technician's console. When "ANTENNA SWITCH CONTROL" relay K3001 is energized, 115 volts AC is fed through the contacts of relay K3001 to the rectifier in coaxial switch S3001. The output voltage from the rectifier is applied across coils A and B of coaxial switch S3001. When coils A and B are energized, the master HF voice transmitter output is disconnected from the antenna, and the standby HF voice

voice transmitter output is disconnected from the antenna, and the standby HF voice transmitter output is connected to the antenna.

(4). The operation of the "CHANNEL NO. 2" relay K101 in the master and standby HF voice transmitters is controlled by HF "CHANNEL 1" switch S1021 and HF "CHANNEL 2" switch S1022. When switch S1021 is depressed, the ground path for relay K101 is removed in both transmitters. Therefore, channel 1 of both transmitters is operational. However, when switch S1022 is depressed, a ground path for relay K101 in the master HF voice transmitter is completed through terminal 3 of terminal board TB9 to terminal 2 of TB7 to terminal 9 of terminal board TB1006 in the communication technician's console. From terminal 9 of terminal board TB1006, the ground path continues through the B contact of switch S1021 to terminal 10 of terminal board TB1006 to terminal 10 of terminal board TB7 in the master HF voice transmitter. Also, when switch S1021 is depressed, a ground path for relay K101 in the standby HF voice transmitter is completed through terminal 3 of terminal board TB9 to terminal 2 of terminal board TB7 to terminal 8 of terminal board TB1007 in the communication technician's console. From terminal 8 of terminal board TB1007, the ground path continues through the B contact of switch S1021 to terminal 9 of terminal board TB1007 to terminal 10 of terminal board TB7 in the standby HF voice transmitter.

C. MCW KEYING OF A/G CIRCUIT

(1). Figure 4-26 shows the functional operation of the air-to-ground MCW keying circuits for a typical site. The operation at Cape Canaveral and Bermuda deviates from that of a typical site because of differences between consoles.

(2). The audio code oscillator provides a 1020-CPS audio signal to tone-modulate the HF or UHF transmitter carriers in the event it is desired to transmit in Morse code rather than by voice. As shown in figure 4-26, pressing key 25 at position 5 of the capsule communicator's console completes the ground circuit for the energizing coil of the transfer relay in the intercom system. With the transfer relay energized, remote keying relay K1005 at the communication technician's console is energized. This completes the push-to-talk circuit of the selected transmitter so that the carrier is keyed on the air continuously and does not, therefore, follow the keying rate. Also, when the transfer relay is energized, a path is completed between the energizing coil of P.T.T. No. 1 relay at the intercom system and the telegraph key

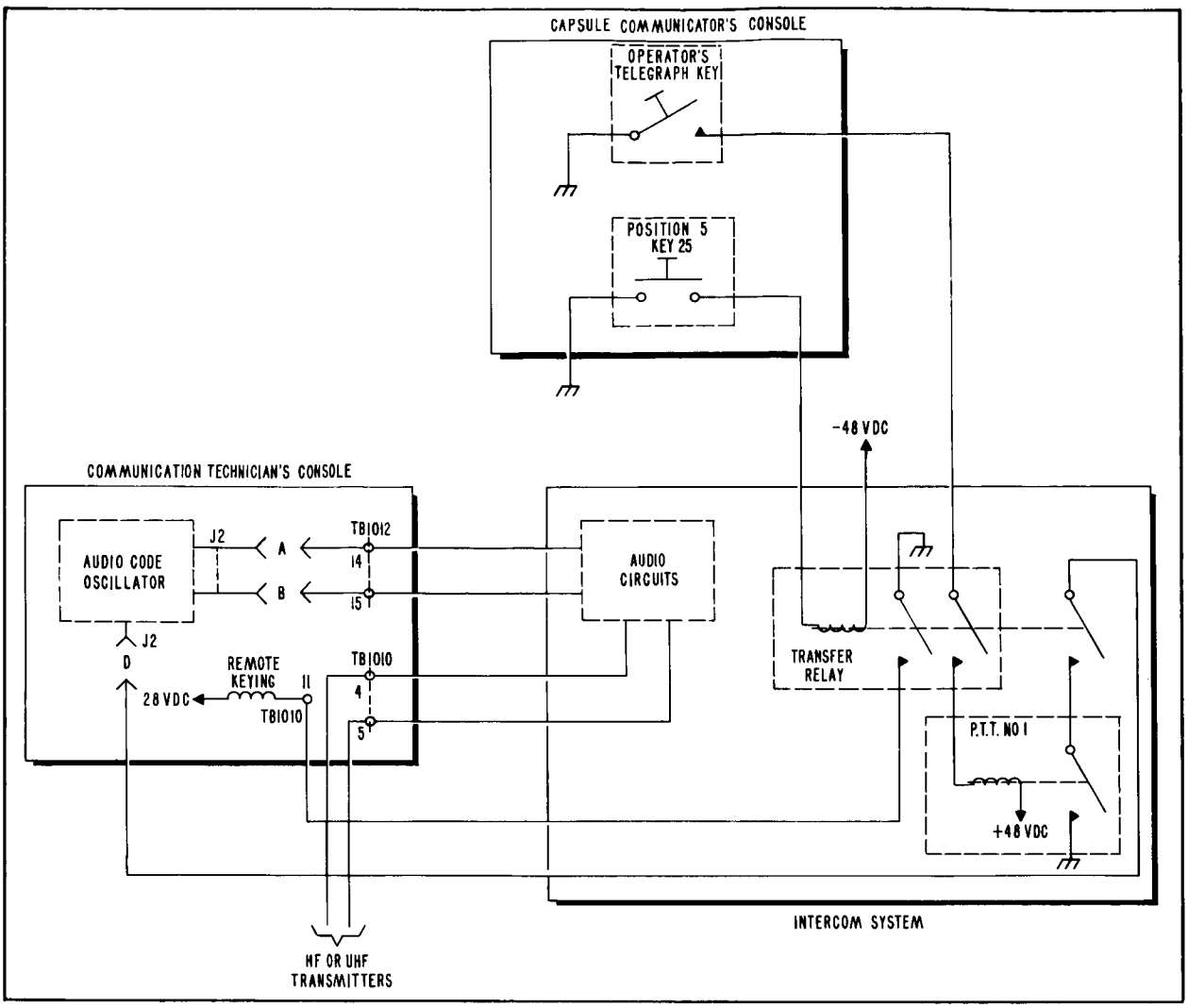

Figure 4-26. Functional Operation of MCW Keying of A/G Circuit

jack at the capsule communicator's console. When the key is closed, the audio code oscillator relay K1 is energized by the ground path being completed from pin D on the audio code oscillator through the two series sets of relay contacts in the intercom system. The 1020-CPS tone from the audio code oscillator is fed from terminals 14 and 15 of terminal board TB1012 to the intercom system. The audio signal is then fed back to terminals 4 and 5 of terminal board TB1010 at the communication technician's console where it is distributed to the selected transmitter.

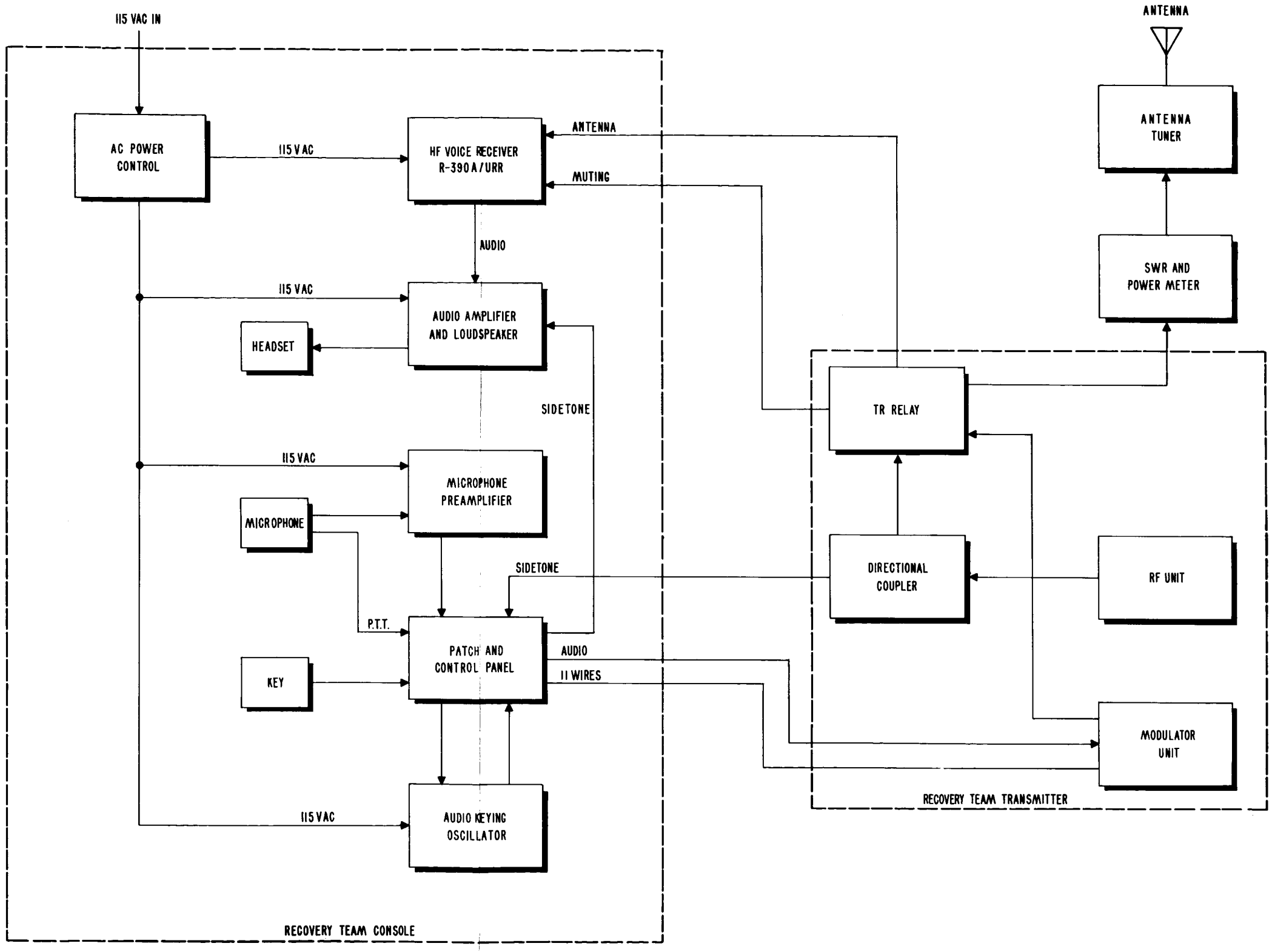

Figure 4-27. **Recovery Team Communications** Equipment Block Diagram

4-7. RECOVERY TEAM COMMUNICATION EQUIPMENT

A. GENERAL

The recovery team communication equipment (used at Grand Canary Island only) is divided into the recovery team console and the recovery team communication transmitter. The functional operation of the recovery team equipment and detailed circuit analysis of individual circuits and units is discussed. Refer to the applicable instruction manual for the detailed theory of operation of units such as the preamplifier, receiver, transmitter, etc.

B. FUNCTIONAL OPERATION

(1). The recovery team communication equipment is located in the transmitter van at the Grand Canary Island site. The recovery team console and transmitter serves as a control unit for communications with the Navy recovery team. From the console, a radio operator is able to carry on two-way communication with the Navy recovery ships using CW, MCW, or AM signals in the 2 to 20 megacycle band. As shown in the block diagram (figure 4-27) and the schematic diagram (figure 7-37), the operator can monitor radio signals received on the HF voice receiver by means of a loudspeaker or through a headset. Since the same antenna is used for both transmitting and receiving, the receiver antenna connection is opened and the receiver muted whenever the recovery team transmitter is operated. This is accomplished by energizing the TR relay. A three-position switch in the console provides a means of selecting CW, MCW, or voice modulation of the transmitter. In the CW position, a telegraph key is switched into the transmitter circuitry through the patch and control panel. Keying the transmitter also keys the 1020-CPS audio keying oscillator in the console. The 1020-CPS audio signal from the audio keying oscillator is patched into the loudspeaker and headset through the patch and control panel, thus providing a sidetone signal. In the MCW mode, the modulator unit of the transmitter is modulated by the 1020-CPS tone from the audio keying oscillator when the telegraph key is depressed. Sidetone, in the MCW mode, is derived from the detected output of the directional coupler located in the transmitter antenna circuitry. This detected output is fed through the patch and control panel to the audio amplifier and loudspeaker panel. In the AM mode, the modulator unit of the transmitter is voice modulated by a low impedance dynamic disk microphone after amplification by the microphone preamplifier located in the console. The microphone stand is provided with a push-to-talk switch

which, when depressed, activates the transmitter. Sidetone, in the AM mode, is derived from the detected output of the directional coupler in the same manner as the MCW sidetone was derived.

(2). The recovery team transmitter is a Gates Transmitter CS-2199 which is similar to the Gates Transmitter CS-2029 used for HF voice transmitting in the capsule communication system. The transmitter is single channel and crystal controlled. The TR relay and directional coupler are mounted on the rear of the RF deck in the transmitter. The RF energy from the RF unit in the transmitter is fed through the directional coupler and TR relay to the SWR and power meter (Tenna-Matcher BE-165/G). With this unit adjustments can be made to obtain minimum SWR. Also, the built-in dummy load permits transmitter tuning without radiating RF energy. The whip antenna presents an unmatched load to the transmitter; so the RF energy from the transmitter is fed through a tuning unit (Tuning Unit TN-339/GR). The tuning unit provides a means of coupling maximum power from the transmitter to whip antenna. The whip antenna (used for both transmitting and receiving) is mounted to the side of the trailer van. It is constructed of stainless steel, and it is adjustable in length to 35 feet.

C. RECEIVING SYSTEM SIGNAL FLOW

(1). As shown in figure 4-28, the RF signal received by the whip antenna is fed through the antenna tuner to "OUTPUT" jack J21 on the SWR and power meter. With the selector switch on the SWR and power meter set to "OPERATE", the RF signal is fed straight through to the "INPUT" jack J20. The RF signal is then fed through a series of coax type plugs and jacks to the TR relay, which is in the de-energized position when receiving. From the normally closed contacts of the TR relay, the RF signal is fed through another series of coax type plugs and jacks to jack J104 on the HF voice receiver. (For a detailed theory of operation of the HF voice receiver, refer to the applicable instruction book listed in table 1-II.) The audio output of the receiver is taken from terminals 10 and 13 of terminal board TB103 and applied to terminal board TB2 on the audio amplifier and loudspeaker panel. (Refer to paragraph 4-7.D. for a detailed theory of operation of the audio amplifier.) The audio signal is then fed through a 15-DB attenuator pad and transformer T2 to "MONITOR VOLUME" control R1 on the patch and control panel. From potentiometer R1, the audio signal is fed back to the audio amplifier via plug P6, where it is monitored by the phone jacks J1 and J2 and the loudspeaker LS1.

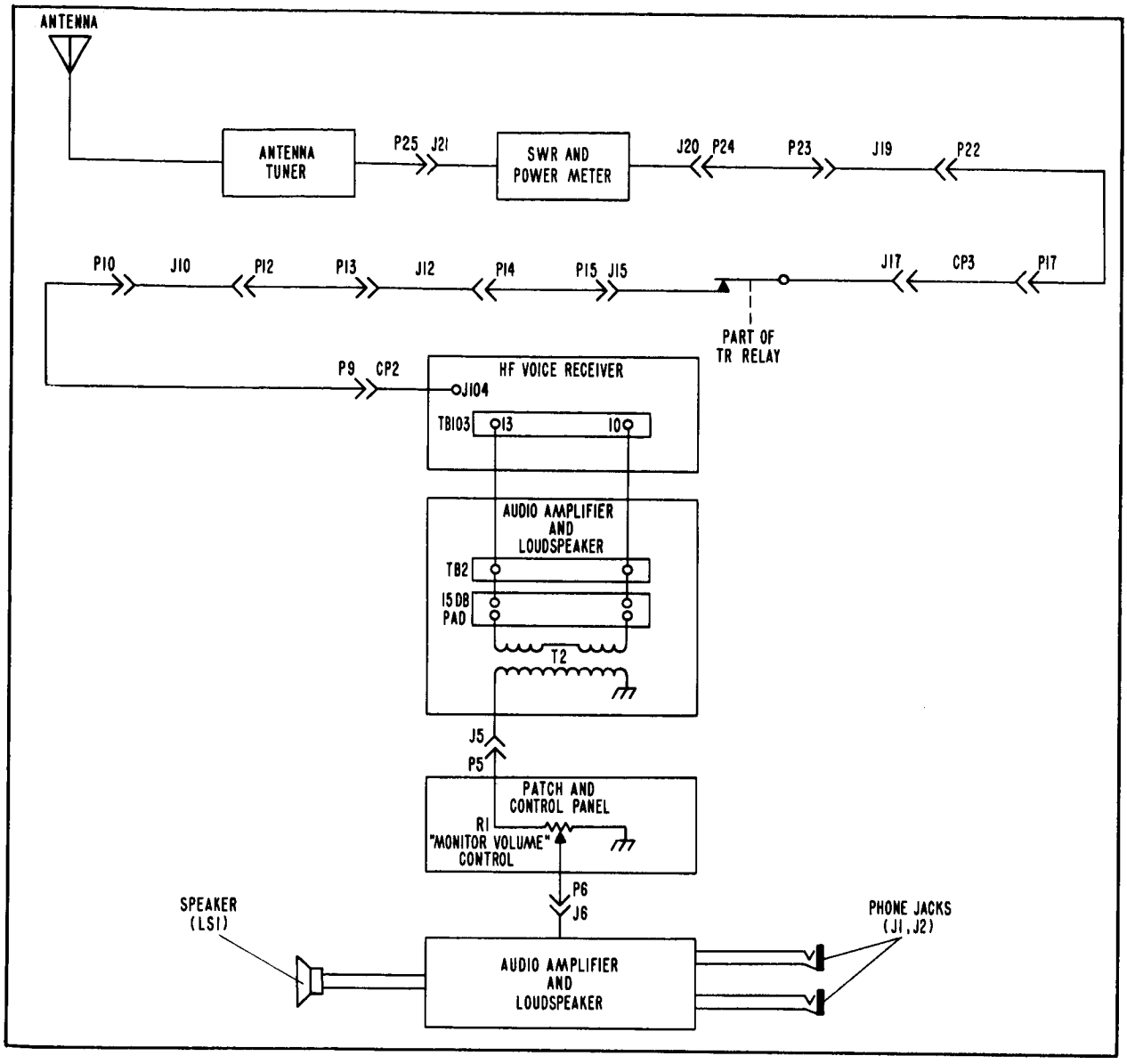

Figure 4-28. Recovery Team Equipment Receiving System Signal Flow, Simplified Schematic

D. AUDIO AMPLIFIER AND LOUDSPEAKER PANEL

(1). The audio amplifier as used with the recovery team equipment receives two audio signal inputs. The first of these is the HF voice receiver audio output. As shown in figure 7-25, the 600-ohm audio from the HF voice receiver is applied to terminal board TB2 and fed through a 15-DB attenuator pad to transformer T2. The primary winding of T2 consists of two series windings which are connected by a jumper between terminals 3 and 4. This connection provides a 600-ohm

impedance. From the output winding of transformer T2, the audio signal is fed to plug P5 and applied to potentiometer R1 on the patch and control panel. The audio signal is then fed back to the audio amplifier via plug P6 and applied to the control grid of amplifier V2. The second audio signal applied to the audio amplifier is the detected transmitter sidetone audio from the directional coupler. This audio signal is applied to jack J4 on the audio amplifier. It is applied to potentiometer R1 on the patch and control panel through resistor R13 and plug P5, and it is then fed back to the audio amplifier and applied to amplifier V2. Amplifier V2 is a conventional amplifier stage. Bias voltage is developed across resistor R1. The amplified audio signal is developed across plate resistor R2 and coupled to the control grid of power amplifier V3 via capacitor C1 and resistor R14. Bias voltage and decoupling for power amplifier V3 is developed across resistor R7 and capacitor C3 in the cathode circuit. The control grid return is through R6 to ground. The output audio signal of power amplifier V3 is developed across the primary winding of transformer T3 with capacitor C4 providing the necessary bypassing. This audio signal is coupled through transformer T3 and applied to phone jacks J1 and J2 and to speaker LS1, if "SPEAKER" switch S1 is in the "ON" position. If "SPEAKER" switch S1 is in the "OFF" position, terminals 3 and 8 (500-ohm impedance) of T3 are connected to the phone jacks and terminals 3 and 4 (four-ohm impedance) are connected to the parallel resistor combination of R8 and R12. These resistors impose a load on the low impedance winding of the output transformer.

(2). Primary power, 115 VAC, is applied to terminal board TB1 and fed through "AMPLIFIER" switch S2 and fuse F1 to the primary winding of power transformer T1. The power supply is a conventional full wave rectifier power supply comprised of the full wave rectifier tube V1 and a capacitive input filter network consisting of capacitors C5, C6, C7 and resistors R9, R10, and R11. Plate supply voltage for power amplifier tube V3 is taken from the power supply filter at the junction of resistors R9 and R10. Plate supply voltage for amplifier V2 and screen grid supply voltage for power amplifier V3 is taken at the junction of resistors R10 and R11. Filament voltage, 6.3 VAC, for amplifier V2 and power amplifier V3 is taken from terminals 6 and 8 of T1. Filament voltage, 5 VAC, for rectifier V1 is taken from terminals 9 and 10 of T1.

E. AUDIO KEYING OSCILLATOR

(1). The audio keying oscillator as used with the recovery team equipment provides two audio signal outputs of 1020 CPS. One output is provided for modulating the recovery team transmitter when transmitting in the MCW mode. The second output is provided as sidetone for the recovery team transmitter when transmitting in the CW mode. When operating in either of these modes, the audio keying oscillator and transmitter are keyed simultaneously.

(2). Basically, the oscillator circuit is a series-fed Hartley. As shown in figure 7-26, oscillator tube V1A, a portion of the tank circuit Z1, and the power supply form a series circuit. The frequency of oscillation, 1020 CPS, is determined by the LC constant of Z1 plus the additional capacity of C2. The tuned circuit Z1 is sealed for maximum protection and reliability. Inductive feedback is accomplished through the tapped tank coil of Z1. The cathode of V1A is connected to the tap. When plate voltage is initially applied to oscillator V1A, plate current flows immediately. This is due to the very small amount of fixed bias injected by the cathode portion of the tank coil. However, as oscillations in the tank circuit build up, grid leak bias, developed across resistor R3, becomes proportional to the AF voltage across the grid tank circuit and maintains a value that establishes a stable oscillatory condition. Resistor R4 provides the necessary voltage drop for the plate, and capacitor C3 maintains the AC voltage on the plate at ground potential. The audio signal is applied to the control grid of amplifier V1B via resistor R5, potentiometer R6, and coupling capacitor C4. Cathode bias for amplifier V1B is developed across R8, and the grid return is through R7. The plate voltage path is through the primary winding of transformer T2 to the B+ supply. The amplified audio signal appearing at the plate is applied to one-half of the primary winding of T2. Only one-half of the winding is used since the transformer primary winding is wound for push-pull input. When relay K1 is energized, the audio signal is applied through contacts 4 and 12 and contacts 2 and 10 to pins A and B of jack J2. The 500-ohm secondary winding of T2 is matched to the balanced 600-ohm line by a 6-DB attenuator matching pad composed of resistors R9 through R15. The amplitude of the audio signal output is controlled by potentiometer R6. Relay K1 is energized by closing switch S2 or by connecting pin D of jack J2 to ground. When relay K1 is de-energized, the audio signal is applied through contacts 4 and 11 and contacts 2 and 9 to the 620-ohm terminating resistor R14. This termination is necessary since the oscillator is operating, and there is a possibility of audio signal leakage.

(3). The audio signal from oscillator V1A is also provided as a sidetone when transmitting in the CW mode. The audio signal developed across the voltage divider network consisting of resistors R5 and R18 and potentiometer R17 is applied to contact 1 of relay K1 through coupling capacitor C5. When relay K1 is energized, this signal is applied through contacts 1 and 8 to pin C of jack J2.

(4). The power supply is a bridge-type rectifier circuit. Primary voltage, 115 VAC, is applied to pins A and B of jack J1. When "POWER" switch S1 is closed, primary voltage is applied through fuse F1 to the primary winding of power transformer T1. Neon lamp DS1, connected across the primary winding, glows when primary voltage is applied to T1. Selenium rectifiers CR1 through CR4 are connected in a bridge-type configuration. The rectified voltage is filtered by resistor R1, choke L1, and capacitors C1A and C1B. Due to the high current drain of the energizing coil of relay K1, it is necessary to deviate slightly from a conventional bridge-type rectifier circuit. When relay K1 is de-energized, the output of the rectifiers is connected to a parallel voltage divider network consisting of resistors R1 and R2 connected directly to ground and R15 and R16 connected to ground through contacts 3 and 5 of relay K1. When relay K1 is energized, resistor R16 of the parallel voltage divider network is replaced by the energizing coil of relay K1. Utilizing this type of switching action, better regulation of the power supply is obtained; consequently, a more constant plate voltage is applied to the plates of tube V1 during keying and non-keying conditions.

F. REMOTE AM OPERATION OF RECOVERY TEAM TRANSMITTER

(1). As shown in figure 4-29, pressing the push-to-talk button on the microphone simultaneously energizes the TR relay and activates the transmitter oscillator circuit by completing the ground path for relays E5 and E7. The ground path is through terminal 6 of terminal board TB8, terminals 6 and 3 of terminal board TB7, to terminal 3 of terminal board 2 on the recovery team console. The completion of the ground path is through the push-to-talk switch, contacts 5 and 4 of switch S1B, contacts A and B of switch S2, terminal 3 of terminal board TB1 to terminal 4 of terminal board TB4 on the transmitter. When the contacts of relay E5 are closed, a ground path for the cathode of the oscillator tube in the transmitter is completed through terminal 5 of terminal board TB8 and terminal 11 of terminal board TB7. When the contacts of relay E7 close, primary voltage is applied to the TR

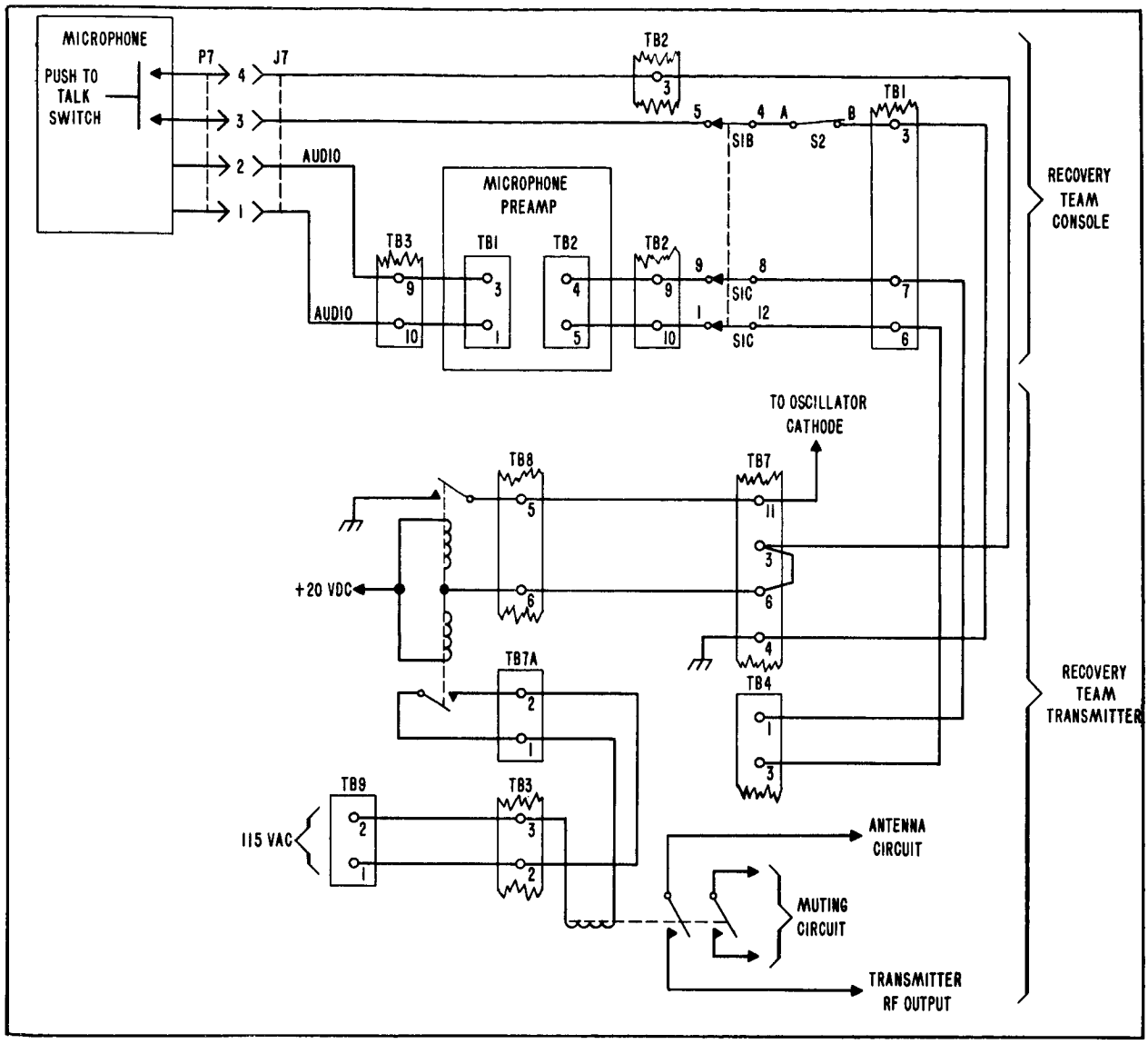

Figure 4-29. Remote AM Control Circuit of Recovery Team Transmitter, Simplified Schematic

relay. Energizing the TR relay completes the receiver muting circuit and connects the transmitter RF energy to the antenna circuit.

(2). The microphone audio is taken from pins 1 and 2 of plug P7 and fed through terminals 9 and 10 of terminal board TB3 to terminals 1 and 3 of terminal board TB1 on the microphone preamplifier. For a detailed theory of operation of the microphone preamplifier, refer to the applicable instruction book listed in table 1-II. The amplified audio is taken from terminals 4 and 5 of terminal board TB2 on the

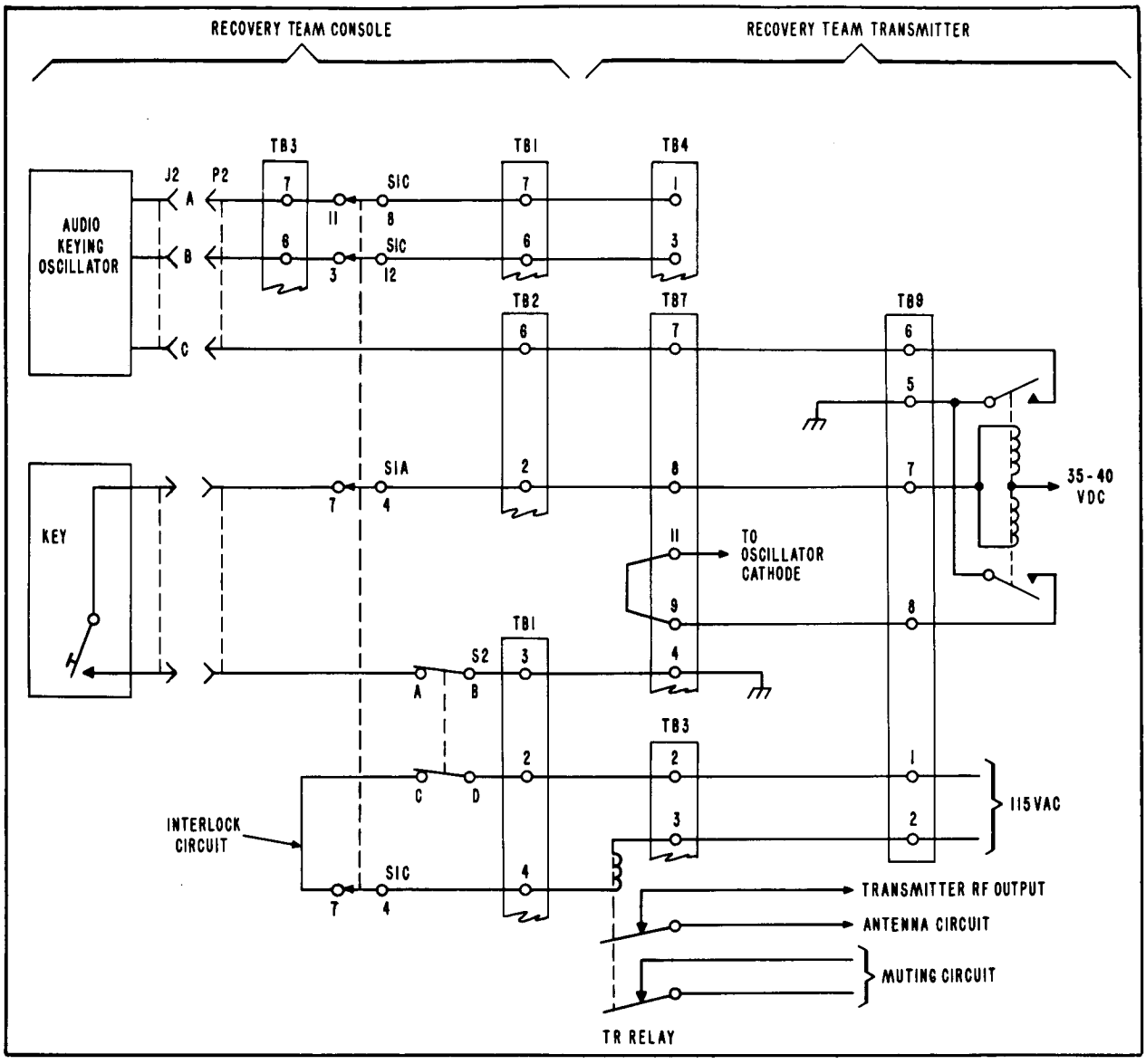

Figure 4-30. Remote MCW Control Circuit of Recovery Team Transmitter, Simplified Schematic

microphone preamplifier and fed through terminals 9 and 10 of terminal board TB2, contacts 9 and 8 and contacts 1 and 12 of switch S1C, terminals 6 and 7 of terminal board TB1, to terminals 1 and 3 of terminal board TB4 on the transmitter.

G. REMOTE MCW OPERATION OF RECOVERY TEAM TRANSMITTER

(1). As shown in figure 4-30, depressing the key simultaneously activates the transmitter oscillator circuit and the audio keying oscillator by completing

the ground path for relays K101 and K102. The ground path is through terminal 7 of terminal board TB9, terminal 8 of terminal board TB7, to terminal 2 of terminal board TB2, and contacts 4 and 7 of switch S1A on the recovery team console. The completion of the ground path is through the key, contacts A and B of switch S2, terminal 3 of terminal board TB1, to terminal A of terminal board TB7 on the transmitter. When relay K102 is energized, a ground path for the cathode of the oscillator tube in the transmitter is completed through terminals 11 and 9 of terminal board TB7, terminal 8 of terminal board TB9, relay contacts of K102, to terminal 5 of terminal board TB9. When relay K101 is energized, a ground path for the audio keying oscillator is completed through pin D of jack J2, terminal 6 of terminal board TB2, terminal 7 of terminal board TB7, terminal 6 of terminal board TB9, relay contacts of K101, to terminal 5 of terminal board TB9. The 1020-CPS audio signal which is generated when the key is closed is taken from pins A and B of jack J2 on the audio keying oscillator and applied to terminals 6 and 7 of terminal board TB3 on the patch and control panel. The audio signal is then fed through contacts 11 and 8 and contacts 3 and 12 of switch S1C to terminals 6 and 7 of terminal board TB1 and then applied to terminals 1 and 3 of terminal board TB4 on the transmitter. The MCW circuitry of the transmitter is energized by completing the path from pin 3 to pin 1 of jack J11 through contacts 8 and 11 of switch S1A.

(2). The TR relay is energized with 115 VAC by setting "RECEIVE-SEND" switch S2 to "SEND". Setting switch S2 to "SEND" completes the interlock circuit so that the TR relay is permanently energized and, therefore, does not follow the activation of the keying circuit. Energizing the TR relay completes the receiver muting circuit and connects the transmitter RF energy to the antenna circuit. The energizing path is terminal 1 of terminal board TB9, terminal 2 of terminal board TB3, terminal 4 of terminal board TB1, contacts 4 and 7 of switch S1C, contacts C and D of switch S2, terminal 2 of terminal board TB1, the energizing coil of the TR relay, terminal 3 of terminal board TB3, and terminal 2 of terminal board TB9.

H. REMOTE CW OPERATION OF RECOVERY TEAM TRANSMITTER

(1). The remote CW circuitry of the recovery team transmitter is very similar to the remote MCW circuitry. Therefore, only the differences will be discussed. As shown in figure 4-31, depressing the key activates the transmitter oscillator circuit and the audio keying oscillator simultaneously by completing the ground

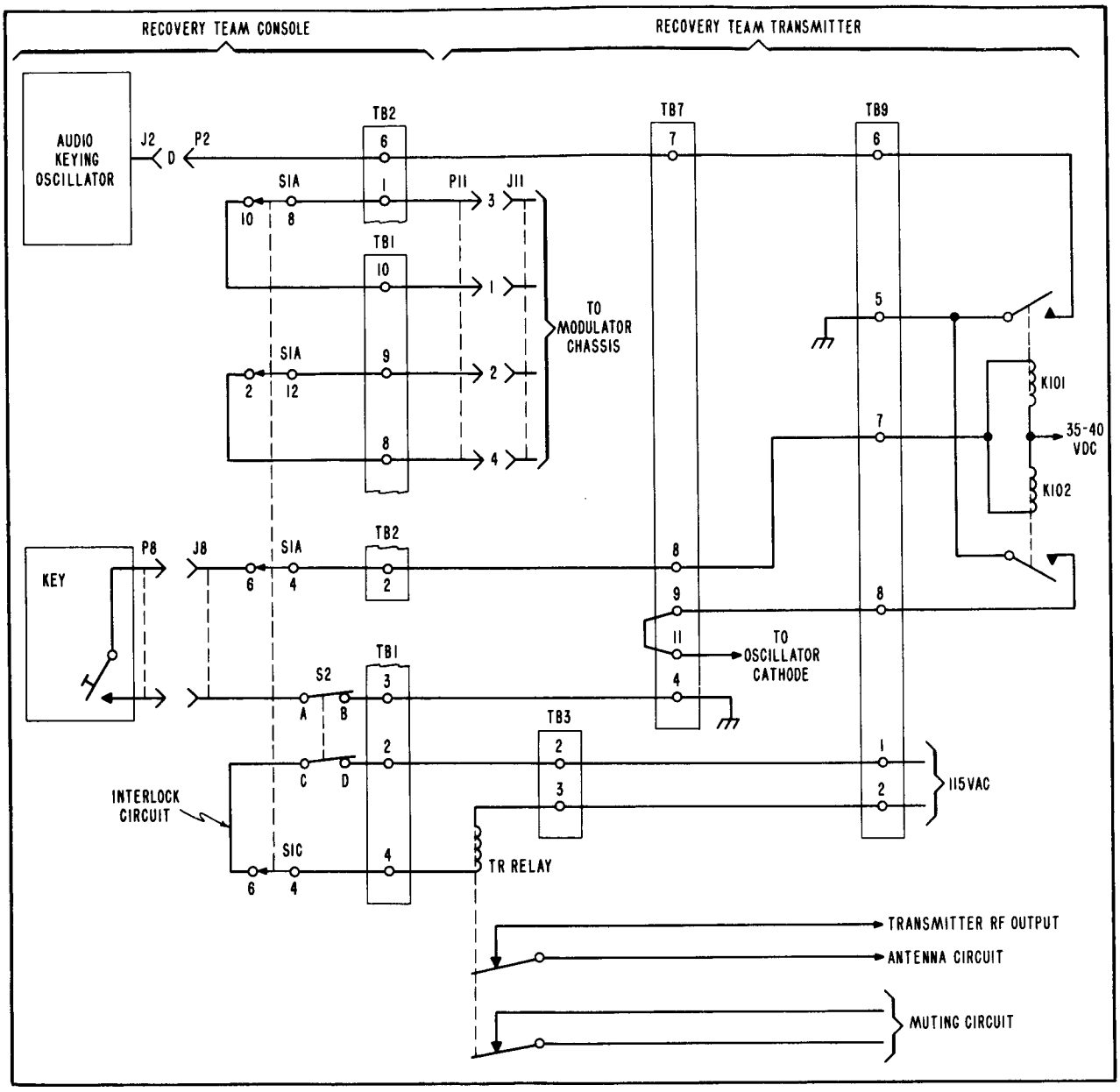

Figure 4-31. Remote CW Control Circuit of Recovery Team Transmitter, Simplified Schematic

path for relays K101 and K102. The ground path differs from that of the remote MCW circuitry in that contacts 4 and 6 instead of 4 and 7 of switch S1A are used. Also, the interlock circuit differs in that contacts 4 and 6 instead of 4 and 7 of switch S1C are used. The CW circuitry of the transmitter is energized by completing the path from pin 3 to pin 1 and pin 2 to pin 4 of jack J11 through contacts 8 and 10 and contacts 12 and 2 of switch S1A.

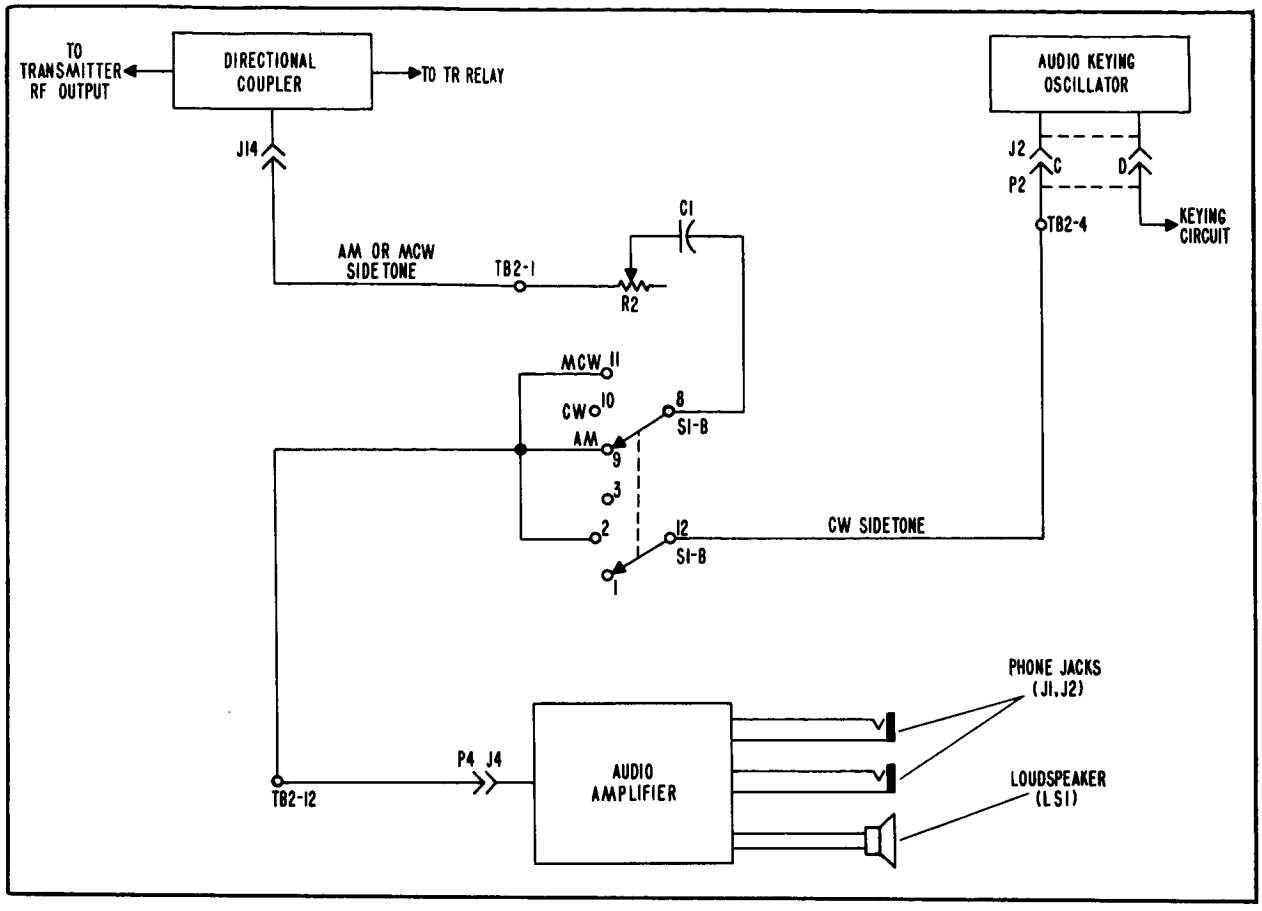

Figure 4-32. Recovery Team Equipment Sidetone Circuit, Simplified Schematic

I. SIDETONE CIRCUIT

(1). In the CW mode the keying circuit is grounded, thereby activating the audio keying oscillator. The 1020-CPS audio signal is taken from pin c of jack J2, as shown in figure 4-32, and fed through contacts 12 and 2 of switch S1B to terminal 12 of terminal board TB2 and applied to jack J4 on the audio amplifier. In the AM and MCW mode, the sidetone is detected by the directional coupler. This sidetone is fed to terminal 1 of terminal board TB2 and applied to switch S1B by potentiometer R2 and coupling capacitor C1. With switch S1B in the AM or the MCW position, the sidetone is fed through contacts 8 and 9 or contacts 8 and 11 to terminal 12 of terminal board TB2 and applied to jack J4 on the audio amplifier.

J. ANTENNA CIRCUITRY

(1). As shown in figure 7-37, the whip antenna, antenna tuner, SWR and power meter, and associated cabling comprise the antenna circuitry. When properly adjusted, the antenna tuner couples maximum power from the transmitter to the antenna. Refer to figures 7-41 and 7-42 for the complete schematic diagrams of the antenna tuner and the SWR and power meter. The following subparagraphs (2) and (3) describe the two switch positions used with the recovery team equipment (2 to 10 MC and 10 to 20 MC) as individual schematic diagrams to describe the antenna tuner in greater detail. A discussion of the SWR and power meter then follows.

(2). Figure 4-33 is a functional schematic diagram of the antenna tuner with range switch SW9 (SW9.1 and SW9.2) set to 2-10 MC and the whip antenna connected to the unit. Since the 35 foot antenna is electrically much shorter than a quarter wavelength, it presents a highly capacitive load to the transmitter. This capacitive antenna is tuned to resonance by providing added inductance of the low-frequency loading coil L6 through the variable tap controlled by the 2 to 10 MC crank handle control. When the inductive reactance of L6 is made equal to the capacitive reactance of the whip antenna, the load presented to the transmitter is purely resistive. Coupling coil L5 acts as an impedance matching transformer so that the resistance of the antenna reflected back to the PA tank circuit, presents the optimum plate load resistance as viewed from the PA tube plate. Rotating the COUPLING INCREASE control handle varies the movable tap of L5 and changes the impedance ratio.

(3). Figure 4-34 is a functional schematic diagram of the antenna tuner with range switch SW9 set to 10-20 MC and the whip antenna connected to the unit. From 10 to 12.5 MC the reactance of the antenna is capacitive; from 12.5 to 20 MC the reactance is inductive. At approximately 12.5 MC the antenna is purely resistive. The antenna is tuned to resonance by varying the movable tap of the high-frequency loading coil L44 through the variable tap controlled by the 10 to 20-MC crank handle control. Vacuum-type capacitor C22 provides the added capacitance necessary when operating from 12.5 to 20 MC. Its effect is neutralized when the system is operating in the 10 to 12.5 MC frequency range by the inclusion of more turns of coil L44 in the circuit.

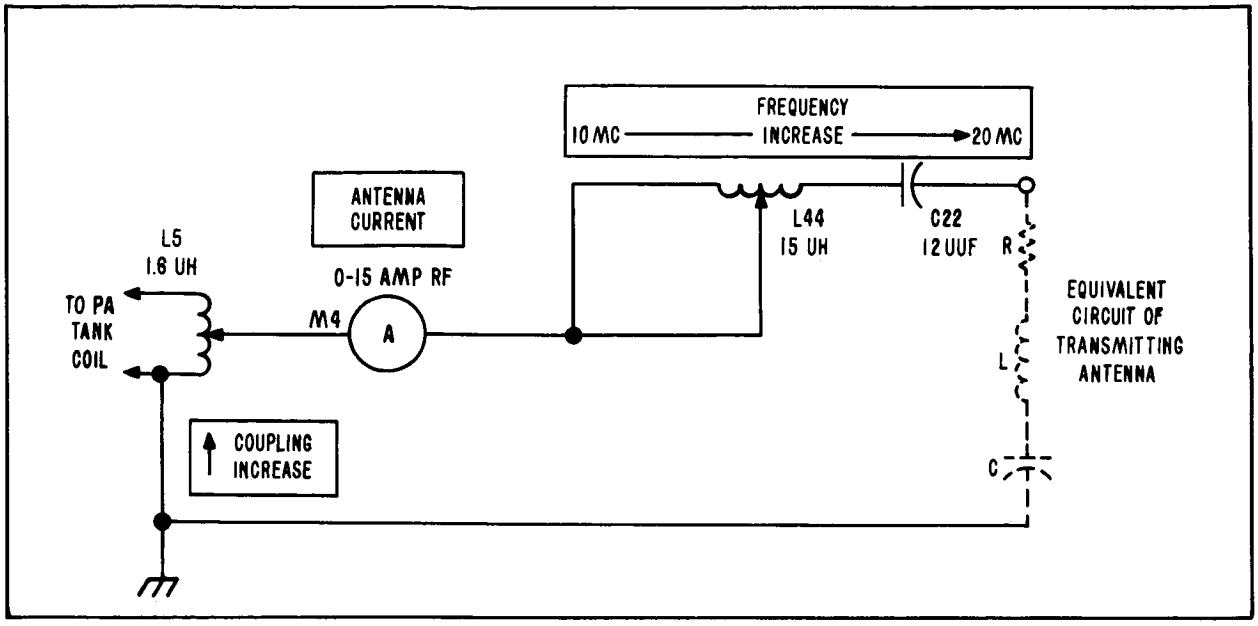

Figure 4-33. Antenna Tuner in 2-10 MC Position, Functional Schematic

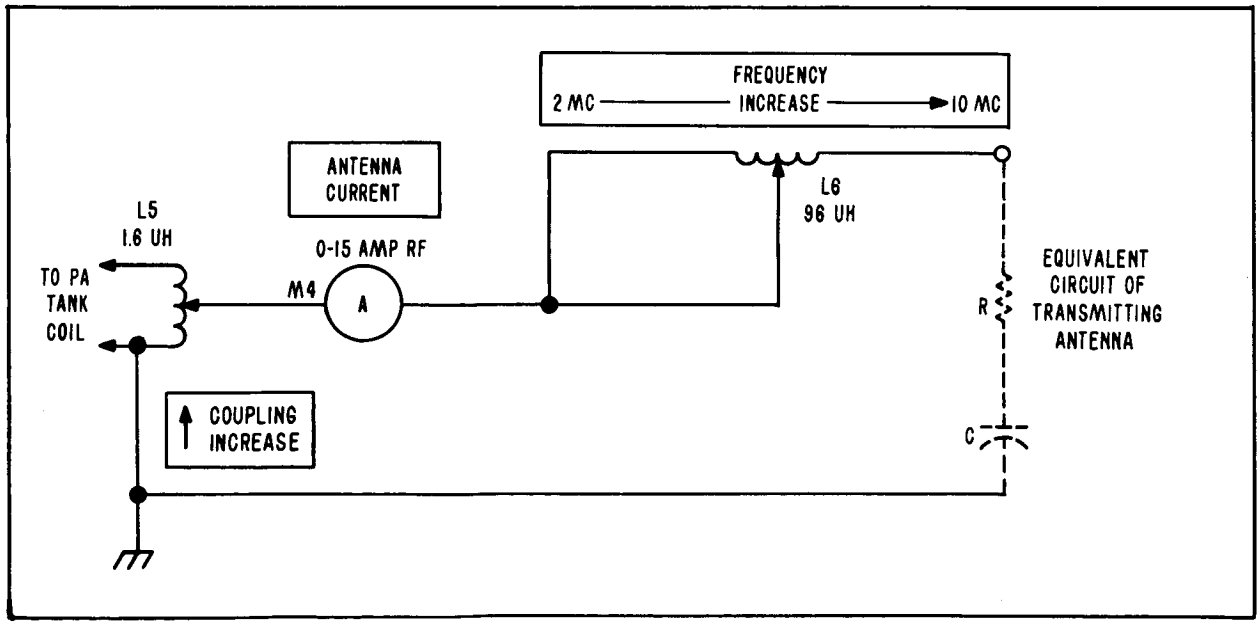

Figure 4-34. Antenna Tuner in 10-20 MC Position, Functional Schematic

Note

The "LONG WIRE" position of switch SW9 is not used with the recovery team equipment.

(4). The SWR and power meter contains a resistive dummy load of 50-ohm impedance for the purpose of tuning or adjusting the transmitter without radiating a signal. It also contains an RF wattmeter which permits the observation of the power output of the transmitter. Also provided are the necessary switches for making these various observations and for sending the transmitter output straight through to the antenna. The panel of the SWR and power meter has a multiscale indicating meter, an adjusting potentiometer, and a function-selector switch. The function-selector switch has four positions. When set to the "POWER" position, the RF output of the transmitter is fed to the 50-ohm dummy load which is comprised of resistors R1 through R12. The pointer of the indicating meter will move up scale and show the power output of the transmitter on the "WATTS" scale. Rectification of the RF is provided by crystal diode CR2. When the function-selector switch is set to the "ADJUST" position, "ADJUST" control R19 is placed in the circuit. This control is used to calibrate the indicating meter preparatory to reading the VSWR. Rectification is provided by crystal diode CR1. Calibration is performed by rotating the potentiometer so that the meter pointer reads exactly full scale. Then, without delay, the function-selector switch is set to the "SWR" position. To avoid the possibility of overheating crystal diode CR1 the function-selector switch should not be left in the "ADJUST" position any longer than the few seconds required to make the calibration. When the switch is in the "SWR" position, the pointer of the indicating meter moves upscale and indicates the voltage to standing wave ratio of the transmission line between the antenna tuner and the antenna. This is a measure of the loss in power which is occurring and a large VSWR is thus an indication that the full transmitter power is not reaching the antenna. The ratio is read on the lower scale of the indicating meter, which is numbered from 0 to 4. The colored segments of the indicator give a rapid indication of this condition. In practice, the operator always seeks the lowest possible VSWR. An excellent figure to strive for is a ratio up to 1.5:1. When the function selector switch is set to the "OPERATE" position, the RF output of the transmitter is fed straight through to the antenna. In this position the SWR and power meter are not considered in use.

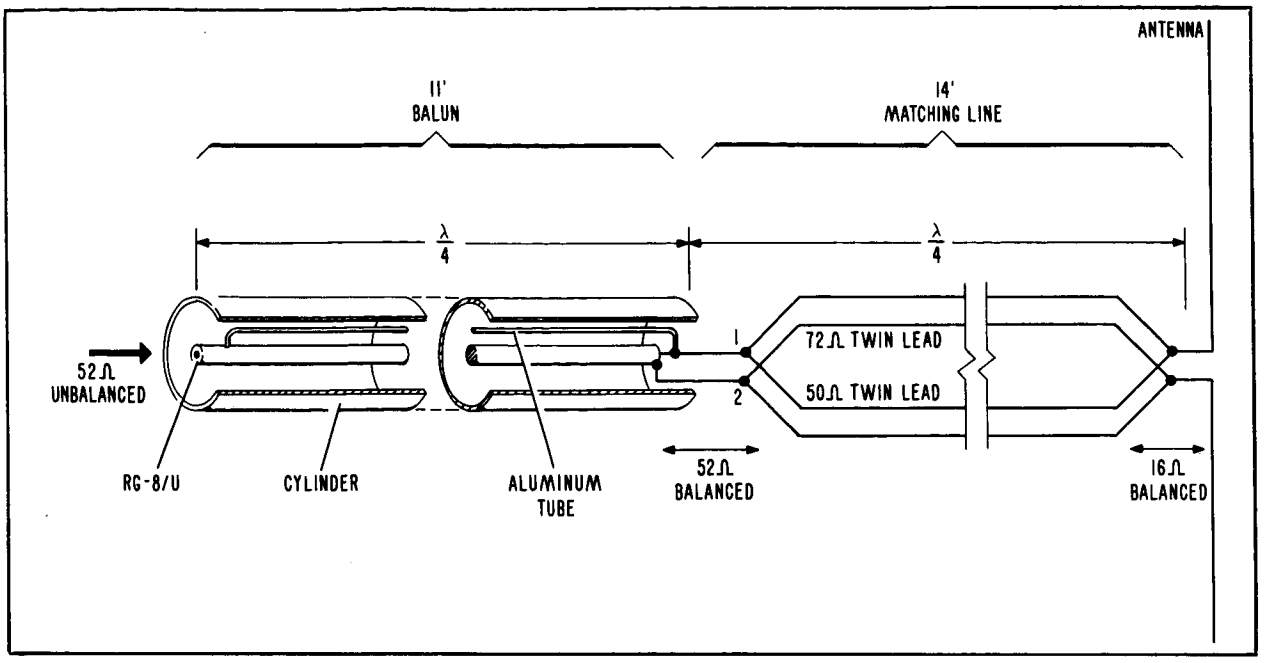

Figure 4-35. HF Balun Detail

K. HF BALUN AND MATCHING LINE

(1). The HF balun and dual twin-lead matching line section performs the dual functions of providing an unbalanced to balanced line transformation and impedance matching of the driven element to a 52-ohm feed system. The physical and electrical details are shown in figure 4-35.

(2) The quarter wavelength piece of RG-8/U coaxial cable determines the required length of eleven feet for the cylinder used to house the balun. Note that the center conductor of the RG-8/U cable is connected to its shield at a point one quarter of a wavelength from the balanced output leads. For a shorted quarter wavelength line, the input impedance is high and the balanced output terminals 1 and 2 are equal and opposite and, therefore, the connection through the aluminum tube permits equal and opposite (and hence zero) current to flow in the shield of the RG-8/U at the unbalanced input.

(3). To match the approximately 16-ohm radiation resistance of the driven element for a two element reflector beam antenna as used here to the 52-ohm

output of the balun, the manufacturer uses a quarter wavelength line of 50-ohm twin-lead in parallel with a 72-ohm twin-lead to obtain a characteristic impedance (Z_o) of approximately 29 ohms. This is the characteristic line impedance required to match the 16 ohms to the 52 ohms. It should be noted, therefore, that the 14-foot lengths of dual twin-lead feedline should not be altered.

L. PRIMARY POWER DISTRIBUTION

(1). As shown in figure 7-37, primary power is applied to terminals 1 and 2 of terminal board TB1 on the power panel. Neon lamp DS1, connected across the primary power line, lights when power circuit breaker switch CB1 is placed in the on position. Primary power, 115 VAC, is then distributed in the recovery team console to the following points:

(a). Terminals 7 and 8 of terminal board TB2 on the microphone preamplifier

(b). Terminal board TB1 on the audio amplifier

(c). Pins A and B of jack J1 on the audio keying oscillator

(d). Terminals A and B of filter FL101 on the HF voice receiver.

4-8. CONTROL OF DOWN-RANGE SITES

A. GENERAL

(1). Two of the Mercury Sites, Grand Bahama Island and Grand Turk Island, are designated as down-range sites. These two sites and Cape Canaveral form a complex which is unique in that a great deal of existing control equipment is utilized. Audio signals originating at Cape Canaveral can be applied to the transmitters at Cape Canaveral or they can be transferred by an existing submarine cable to either Grand Bahama Island or Grand Turk Island and transmitted to the capsule from these sites. Similarly, voice signals from the capsule can be received by the receivers at Cape Canaveral or they can be received at either of the down-range sites and relayed back to Cape Canaveral over this same cable. The Cape Canaveral transmitters and receivers are made inoperative at the communication technician's console while the down-range site is being used as the transmitting and receiving point. Grand Bahama Island and Grand Turk Island share existing cable facilities; therefore, only one down-range site can be so used at any given time for transmission and/or reception.

However, transmission from one down-range site while receiving from the other is possible. Also, since the submarine cable is shared by other agencies, use of the down-range sites in this manner is restricted by the capacity of the cable. Switching requirements are provided at Grand Bahama Island for selection of either Grand Turk or Grand Bahama Island communications transmission to Cape Canaveral.

(2). It should be noted that the communications engineer at the Mercury Control Center (MCC) at Cape Canaveral selects the receiving system at either Grand Bahama Island or at Grand Turk Island, selection being determined by quality of reception. However, the engineer at MCC cannot select the mode of reception (i.e., HF or UHF, receiver No. 1 or receiver No. 2, etc.) at the down-range sites. Local control at these sites determines whether the HF or UHF voice receivers are used, selection being determined by the quality of reception. Similarly, the communications engineer at MCC selects the transmitting system at either Grand Bahama Island or at Grand Turk Island. Again, the mode of transmission (i.e., HF or UHF, master transmitter or standby, etc.) is selected locally.

B. FUNCTIONAL OPERATION

(1). As shown in the block diagram, figure 4-36, the communication technician's console at Cape Canaveral is the point at which control of the down-range sites is exercised. The six control switches and the six control status lamps are mounted on the down-range control panel shown in figure 3-20. There are four switches ("RCVR GBI", "RCVR GTI", "XMTR GBI", "XMTR GTI") for selecting the receivers and/or transmitters at the two down-range sites, and there are four control status lamps for each of these switch functions. Also, there is a "PUSH-TO-TALK ON" switch which de-energizes the local control circuitry at Cape Canaveral, permitting down-range control, and there is an "ALL OFF" switch which restores local control at Cape Canaveral. In addition to the four switch control status lamps, there is a "SYSTEM IN USE" lamp that lights when all down-range control circuits are in use, and there is a "RCVR SIGNAL PRESENT" lamp that lights when an audio signal from a down-range receiver is being received at Cape Canaveral. If the "SYSTEM-IN-USE" lamp is not lit, a down-range control circuit is available. Selecting a down-range receiver and/or transmitter can then be accomplished by depressing the "PUSH-TO-TALK ON" switch and momentarily pressing the desired receiver and transmitter control switches on the down-range control panel. Utilizing

these control switches, reception and transmission from the same site or reception and transmission from different sites can be accomplished.

(2). When one of the four down-range control switches is pressed, a relay closure is set up by the tone equipment and transferred by the submarine cable to the selected down-range site. The tone equipment at the selected site sets up another relay closure, thus energizing a down-range control relay. The "RCVR ON" lamp or "XMTR ON" lamp on the range control status panel, figure 3-21, lights upon receipt of the relay closure. This signifies that the receiver or transmitter of that site has been selected at Cape Canaveral for down-range operation. When a down-range control relay is energized, the tone equipment at the down-range site sets up a relay closure which is transferred by the submarine cable back to Cape Canaveral, thus energizing one of the four switch control status lamps. It should be noted that more tone equipment is used at Grand Bahama Island than at Grand Turk Island. This is necessary because of the approximate six-mile distance between the central control area, where the submarine cable ties in, and the receiving area, where the communication technician's console and transmitters are located. Also, the necessary switching requirements between the two down-range sites is performed at Grand Bahama Island, thereby, necessitating additional tone equipment.

(3). In addition to the down-range control exercised at Cape Canaveral, automatic functional control between the two down-range sites is also provided by the tone equipment. The following subparagraphs summarize the functional control logic existing between Grand Bahama Island and Grand Turk Island.

(a). UHF voice transmitter on at one site turns UHF voice transmitter off at the other site upon receipt of the on indication by the Indication System Coder.

1. UHF voice transmitter off turns all UHF voice transmitters off at both sites.

(b). HF voice transmitter on at one site turns HF voice transmitter off at the other site upon receipt of the on indication by the Indication System Coder.

1. HF voice transmitter off turns all HF voice transmitters off at both sites.

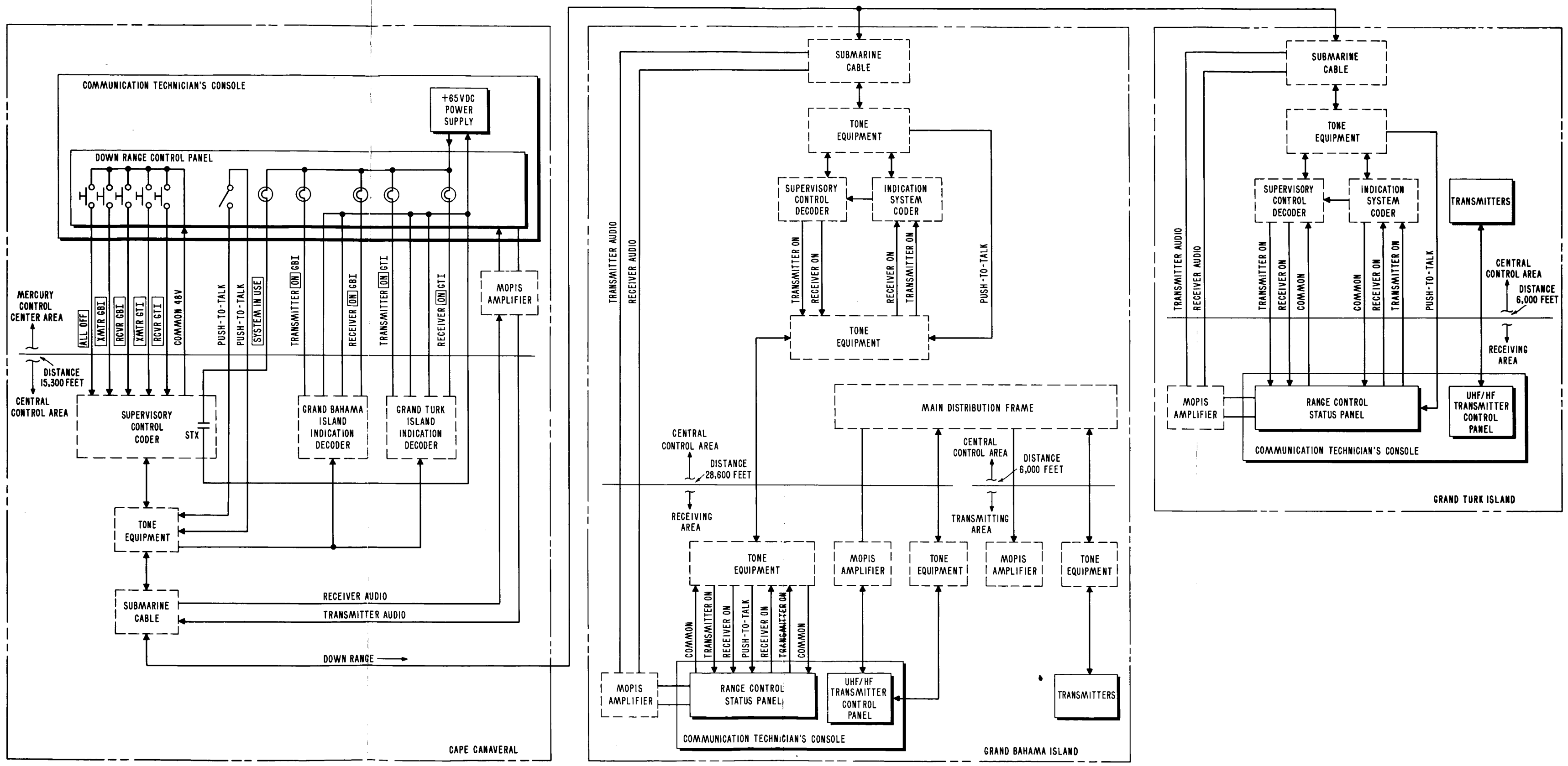

Figure 4-36. Down-Range Control Block Diagram

(c). UHF voice receiver on at one site turns UHF voice receiver off at the other site upon receipt of the on indication by the Indication System Coder.

1. UHF voice receiver off turns all UHF voice receivers off at both sites.

(d). HF voice receiver on at one site turns HF voice receiver off at the other site upon receipt of the on indication by the Indication System Coder.

1. HF voice receiver off turns all HF voice receivers off at both sites.

(e). PUSH-TO-TALK gives keying contact closure to each site.

C. DETAILED OPERATION OF TRANSMITTER AND RECEIVER CONTROL

(1). Since the down-range control circuitry for both sites is very similar, only the control circuitry for the Grand Bahama Island transmitters and receivers will be discussed. See figures 4-37 and 4-38 for the simplified schematics of the down-range transmitter and receiver remote control system. As shown in these figures, depressing "PUSH-TO-TALK ON" switch S1030 breaks the 28-volt DC path for the holding coils of "EMER VOICE" switch S1033, "HF XMTR" switch S1017, "UHF XMTR" switch S1016, and "UHF/HF XMTR" switch S1015, therefore, placing these switches in the unlatched position. With these four switches in the unlatched position, the ground path for the holding coil circuit of switch S1030 is completed as shown by the heavy line. With switch S1030 in the latched position, two circuit function changes are accomplished. First, a ground path for the energizing coil of relay K1020 is completed. This switches the receiver in use audio appearing at terminals 1 and 2 of terminal board TB1010 from the Cape Canaveral receiving circuit to the down-range receiving circuit. Also, the microphone audio is switched from the Cape Canaveral transmitters to the down-range transmitters. The second circuit function accomplished by switch S1030 is the transfer of the push-to-talk ground path from remote keying relay K1005 to relay K1021.

(2). As shown in figure 4-37, the path between terminals 51 and 57 of terminal board TB7F on the central distribution frame is completed when "XMTR GBI" switch S1026 at the communication technician's console is pressed. This circuit

is fed to the main distribution frame and then to the down-range control equipment where a relay closure is set up by the tone equipment. This relay closure is transferred to the Grand Bahama Island site and applied to terminal 7 of terminal board TB1 as a ground, thus energizing relay K1018. The ground path for the "XMTR ON" lamp is completed through contacts 10 and 11 of relay K1018. Energizing relay K1018 also completes the transmitter indicator circuit between terminals 11 and 13 of terminal board TB1 at the junction box. This circuit is fed to the down-range control equipment where a relay closure is set up by the tone equipment. This relay closure is transferred to the Cape Canaveral site and applied to terminal 67 of terminal board TB7F as a ground, thus completing the ground path for the transmitter "ON" GBI lamps. To compensate for the line loss between the lamps and the ground point (approximately 15,000 feet), the lamps, 28-VDC neon bulbs, are connected to 65 VDC instead of 28 VDC. The proper operating voltage for the lamps is obtained by the voltage divider network consisting of resistors R1025 and R1026 and the voltage drop due to the line resistance. A resistor for each lamp instead of one resistor for both lamps provides voltage protection for the remaining lamp in the event that one of the lamps should burn out. The voltage on the remaining lamp will not rise sufficiently to cause it to also burn out.

(3). With relay K1018 at Grand Bahama Island energized, the transmitters can be energized by pressing the push-to-talk switch on the microphone at the Cape Canaveral intercom system. Pressing the push-to-talk switch completes the ground path for the energizing coil of relay K1021. The push-to-talk circuit path between terminals 53 and 54 of terminal board TB7F at the central distribution frame is completed when relay K1021 is energized. This circuit completion is fed to the main distribution frame and then to the down-range control equipment where a relay closure is set up by the tone equipment. This relay closure is transferred to the Grand Bahama Island site and applied to terminal 12 of terminal board TB1 as a ground. The ground path for relay K1019 is now completed through contacts 16 and 17 of relay K1018, terminal 12 of terminal board TB1011, and terminal 12 of terminal board TB1. The ground path for the "PTT ON" lamp is completed through contacts 7 and 8 of relay K1019. Energizing relay K1019 also completes the ground path for remote keying relay K1005 at the communication technician's console. The ground path is from terminal 11 of terminal board TB1010, through the intercom system to terminal 7 of terminal board TB1012, and to ground through contacts 16 and 17 of relay K1019.

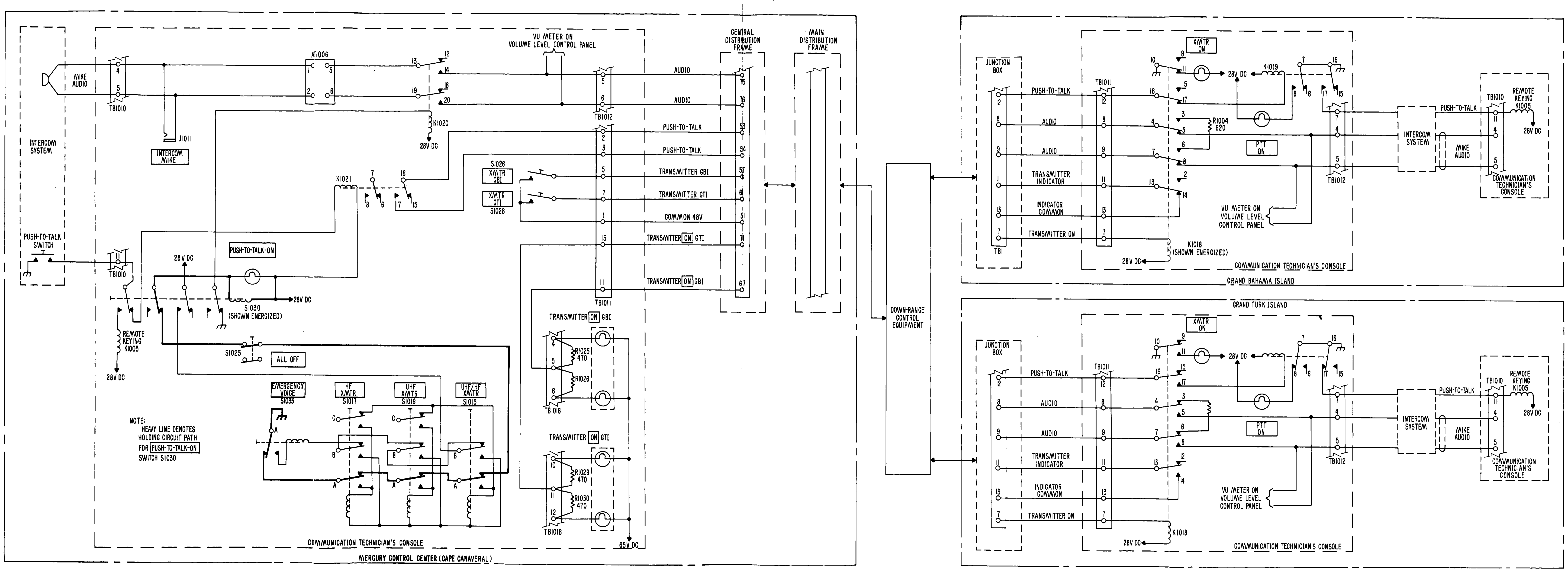

Figure 4-37. Remote Control of Down-Range Transmitters, Simplified Schematic

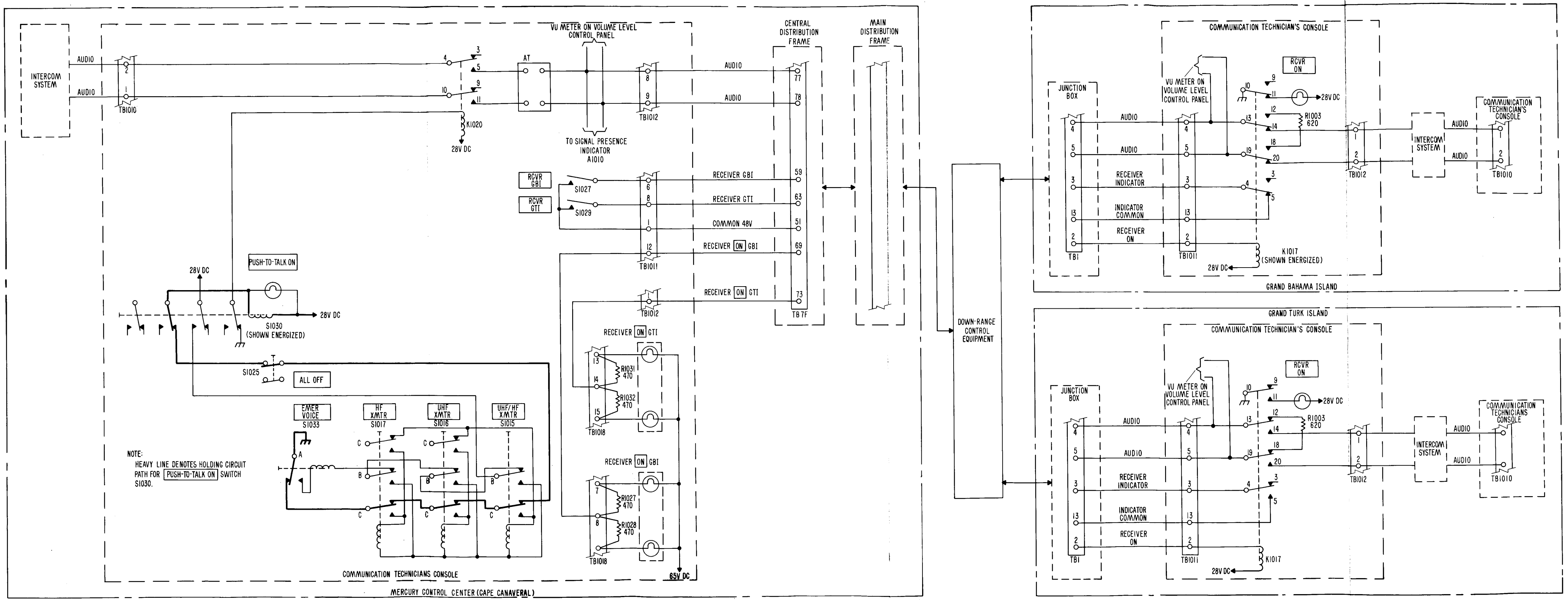

Figure 4-38. Remote Control of Down-Range Receivers, Simplified Schematic

(4). The microphone audio from the intercom system at Cape Canaveral is fed to terminals 4 and 5 of terminal board TB1010, through attenuator AT1006, the de-energized contacts of switch S1033, contacts 13, 14 and 19, 20 of relay K1020, terminals 5 and 6 of terminal board TB1012, to terminals 75 and 76 of terminal board TB7F. Jack J1011 is provided for monitoring the microphone audio at the communication technician's console. Attenuator AT1006 is an H-pad with approximately 6-DB attenuation. By depressing "XMTR DOWN RANGE" button on the auxiliary control panel (figure 3-24), the microphone audio can be monitored on the volume level control panel (figure 3-25) as it leaves the communication technician's console. The microphone audio appearing at terminals 75 and 76 of terminal board TB7F is fed to the main distribution frame and then applied to the down-range control equipment. After being transferred to the Grand Bahama Island site, the microphone audio is applied to terminals 8 and 9 of terminal board TB1. It is then applied to terminals 8 and 9 of terminal board TB1011, fed through contacts 4, 5 and 7, 8 of relay K1018, applied to terminals 4 and 5 of terminal board TB1012, fed through the intercom system and back to terminals 4 and 5 of terminal board TB1010 at the communication technician's console. The microphone audio is then fed through the communication technician's console to the transmitters in the same manner as if the transmitters at Grand Bahama Island were under local control. Refer to paragraphs 4-5.B.(2). and 4-6.B.(2). for a discussion of this circuitry. It should be noted that the microphone audio can be monitored on the volume level control panel (figure 3-25) by depressing "XMTR FROM CABLE" button on the auxiliary control panel (figure 3-24).

(5). As shown in figure 4-38, the path between terminals 51 and 59 of terminal TB7F on the central distribution frame is completed when "RCVR GBI" switch S1027 at the communication technician's console is pressed. This circuit is fed to the main distribution frame and then to the down-range control equipment where a relay closure is set up by the tone equipment. This relay closure is transferred to the Grand Bahama Island site and applied to terminal 2 of terminal board TB1 as a ground, thus energizing relay K1017. The ground path for the "RCVR ON" lamp is completed through contacts 10 and 11 of relay K1017. Energizing relay K1017 also completes the receiver indicator circuit between terminals 3 and 13 of terminal board TB1 at the junction box. This circuit is fed to the down-range control equipment where a relay closure is set up by the tone equipment. This relay closure is transferred to the Cape Canaveral site and applied to terminal 69 of terminal

board TB7F as a ground, thus completing the ground path for the receiver "ON" GBI lamps.

(6). The receiver audio at Grand Bahama Island is taken from terminals 1 and 2 of terminal board TB1010 at the communication technician's console, fed through the intercom system, and then back to terminals 1 and 2 of terminal board TB1012 at the communication technician's console. It is then applied to terminals 4 and 5 of terminal board TB1 through contacts 13, 14 and 19, 20 of relay K1017, and terminals 4 and 5 of terminal board TB1011. By depressing "RCVR TO CABLE" button on the auxiliary control panel (figure 3-24), the receiver audio can be monitored on the volume level control panel (figure 3-25) as it leaves the communication technician's console. The receiver audio appearing at terminals 4 and 5 of terminal board TB1 is applied to the down-range control equipment.

(7). After being transferred to the Cape Canaveral site, the receiver audio is fed through the main distribution frame to terminals 77 and 78 of terminal board TB7F at the central distribution frame. It is then applied to terminals 8 and 9 of terminal board TB1012 at the communication technician's console, fed through attenuator AT1003, fed through contacts 10, 11 and 4,5 of relay K1020, applied to terminals 1 and 2 of terminal board TB1010, and then fed to the intercom system. By depressing "RCVR DOWN RANGE" button on the auxiliary control panel (figure 3-24), the receiver audio can be monitored on the volume level control panel (figure 3-25) as it enters the communication technician's console. Signal presence indicator A1010 is paralleled with the incoming audio signal. Refer to paragraph 4-2.J. for an explanation of signal presence indicator circuits. Attenuator AT1003 provides 20-DB attenuation of the audio signal in 1-DB steps. It should be noted that the DB indication stencilled on the attenuator progresses from 0 to 20 in a clockwise direction. With the attenuator set to 20 DB (fully clockwise), 0-DB attenuation is provided, and with the attenuator set to 0 DB (fully counterclockwise), 20-DB attenuation is provided.