NEG

MS-117 VOL. 2
SECTIONS VI AND VII

project
mercury

OPERATION AND MAINTENANCE

ACQUISITION SYSTEM POINT ARGUELLO

prepared for
National Aeronautics and Space Administration
Contract No. NAS 1-430

May 15, 1961

The Bendix Corporation
Bendix Radio Division

in association with

WESTERN ELECTRIC COMPANY, INC.

MS - 117

LIST OF EFFECTIVE PAGES

TOTAL NUMBER OF PAGES IS 310 AS FOLLOWS:

Item	*Page No.*	*Issue*	*Item*	*Page No.*	*Issue*
	VOLUME I				
Title Page		Original			
A-Page		Original			
Front	i thru xvi	Original			
Sect. I	1-1 thru 1-52	Original			
Sect. II	2-1 thru 2-14	Original			
Sect. III	3-1 thru 3-36	Original			
Sect. IV	4-1 thru 4-68	Original			
Sect. V	5-1 thru 5-52	Original			
	VOLUME II				
Title Page		Original			
A-Page		Original			
Front	i thru xiv	Original			
Sect. VI	6-1 thru 6-20	Original			
Sect. VII	7-1 thru 7-50	Original			

* The asterisk indicates pages revised, added or deleted by the current change.

A

CASE FILE COPY

TABLE OF CONTENTS

Paragraph		Page
	SECTION I. GENERAL DESCRIPTION	
1-1.	General Information	1-1
	A. Scope of Manual	1-1
	B. Project Mercury Scope	1-1
	C. Site Functions	1-2
	D. System Functions	1-2
1-2.	Equipment Supplied	1-2
1-3.	Description of Acquisition System	1-3
	A. General	1-3
	B. Physical Description	1-3
	(1). Radar Site Acquisition Data Console	1-3
	(a). Acquisition Data Panel	1-9
	(b). Dual Power Supply	1-12
	(c). Relay Chassis	1-12
	(2). Receiver Site Acquisition Data Console	1-12
	(a). Acquisition Data Panel	1-12
	(b). Dual Power Supply	1-15
	(c). Signal Strength Meter Panel	1-15
	(d). Audio Amplifier	1-15
	(e). Relay Chassis	1-15
	(3). Intercom Cabinet	1-15
	(4). Synchro Line Amplifiers	1-15
	(5). Active Acquisition Aid	1-16
	(6). Synchro Remoting Systems	1-17
	(7). Additional Equipment	1-18
	(a). Synchro Reference Voltage Transformers	1-18
	(b). Master-Slave Relay Panel	1-21
	(c). FPS-16 Radar Control Relay	1-21
	(d). Antenna Drive Power Cutoff Switch and Warning Light	1-21
	C. Functional Description	1-23
	(1). General	1-23

TABLE OF CONTENTS (Cont.)

Paragraph | Page

SECTION I. GENERAL DESCRIPTION (Cont.)

(2). Radar Site Acquisition Data Console 1-32
(3). Receiver Site Acquisition Data Console 1-39
(4). Synchro Line Amplifiers 1-40
(5). Active Acquisition Aid 1-41
(6). Synchro Remoting Systems 1-42
(7). Additional Equipment 1-43
(a). Synchro Reference Voltage Transformers 1-43
(b). Master-Slave Relay Panel 1-43
(c). FPS-16 Radar Control Relay 1-43
(d). Antenna Drive Power Cutoff Switch and Warning Light 1-43

1-4. Site Implementation 1-44
A. General 1-44
B. Equipment Allocation 1-44
C. Site Description 1-44
(1). Site Layout 1-44
(a). Radar Site 1-44
(b). Receiver Site 1-44
(c). Transmitter Site 1-47
(2). Equipment Location — Radar Site 1-47
(a). Acquisition Data Console 1-47
(b). Active Acquisition Aid 1-47
(c). Synchro Remoting System 1-48
(d). FPS-16 Radar 1-48
(e). Verlort Radar 1-49
(f). Synchro Line Amplifiers 1-49
(3). Equipment Location — Receiver Site 1-49
(a). Acquisition Data Console 1-49
(b). Receiving Antennas 1-50
(c). Synchro Remoting Systems 1-50
(d). Synchro Line Amplifier 1-50

TABLE OF CONTENTS (Cont.)

Paragraph		Page
	SECTION I. GENERAL DESCRIPTION (Cont.)	
	(4). Equipment Location — Transmitter Site	1-50
	(a). Transmitting Antenna	1-50
	(b). Synchro Remoting System	1-51
	(c). Synchro Line Amplifier	1-51
	SECTION II. INSTALLATION	
2-1.	General	2-1
2-2.	Equipment Installation	2-1
	A. Floor Mounted Equipment	2-1
	(1). Consoles and Cabinets	2-1
	(2). Amplidynes	2-1
	B. Equipment on Towers	2-6
	(1). Antenna and Pedestal	2-6
	(2). RF Housing	2-6
	(3). Multiplexers	2-6
	(4). Antenna Drive Power Cutoff Switch and Warning Light	2-7
	(5). Boresight Transmitter and Antenna	2-7
	C. Small Components	2-9
	(1). Synchro Reference Voltage Transformers	2-9
	(2). Verlort Radar Control Relay	2-11
	(3). FPS-16 Radar Control Relay	2-11
	(4). Synchro Line Amplifiers	2-11
2-3.	Interconnecting Cabling	2-11
	A. Electrical Interconnections	2-11
	B. Cable Installation	2-11
2-4.	Pre-operational Checks	2-13
	A. Component (Unit) Checks	2-13
	B. System Checks	2-13
	SECTION III. SYSTEM OPERATION	
3-1.	General	3-1
3-2.	Initial Turn-on Procedure	3-1

TABLE OF CONTENTS (Cont.)

Paragraph | Page

SECTION III. SYSTEM OPERATION (Cont.)

A. External Power Connections 3-1
(1). Radar Site 3-1
(2). Receiver Site 3-7
B. 28 VDC Power Supply 3-7
C. Indicators 3-10
D. Source Switches — Radar Site. 3-13
E. Source Switches — Receiver Site 3-13
F. Synchros and Synchro Line Amplifiers 3-14
G. Audio Amplifier 3-14
H. Signal Strength Meters and Pilot Lights 3-14
I. Intercom Panel 3-16

3-3. Normal Turn-On Procedure 3-16

3-4. Normal Operating Procedure 3-17
A. Operating Instructions — Radar Site 3-17
B. Operating Instructions — Receiver Site. 3-20
C. Operating Criteria — Radar Site 3-23
(1). Preparation for Capsule Pass 3-23
(2). Initial Acquisition — Active Acquisition Aid 3-23
(3). Initial Acquisition — Verlort Radar 3-26
(4). Initial Acquisition — FPS-16 Radar 3-27
(5). Initial Acquisition — Acquisition Data Console. 3-27
(6). Tracking 3-28
D. Operating Criteria — Receiver Site 3-28
(1). Preparation for Capsule Pass 3-29
(2). Initial Acquisition and Tracking 3-29

3-5. System Operational Checks 3-29
A. D-c Indications 3-29
(1). Radar Site 3-29
(2). Receiver Site 3-30
B. Synchros, Synchro Line Amplifiers, and Synchro Remoting Systems 3-31

TABLE OF CONTENTS (Cont.)

Paragraph		Page
	SECTION III. SYSTEM OPERATION (Cont.)	
	(1). Radar Site	3-31
	(2). Receiver Site	3-32
	C. Signal Strength Meters	3-33
	D. Audio Amplifier	3-33
3-6.	Emergency Operating Procedure	3-33
	A. Operation With Data Source Failure	3-33
	(1). Radar Site	3-34
	(2). Receiver Site	3-34
	B. Operation With Component Malfunction	3-35
	(1). Acquisition Data Console 28 VDC Power Supply	3-35
	(2). Relays	3-35
	(3). Synchro Line Amplifiers	3-35
	(4). Synchros	3-36
	SECTION IV. THEORY OF OPERATION	
4-1.	General	4-1
	A. Function of the System	4-1
	B. Data Inputs	4-1
	(1). Radar Site	4-1
	(2). Receiver Site	4-2
	C. Normal Operation	4-3
4-2.	Detailed Discussion	4-4
	A. Discussion of Overall System	4-4
	B. Radar Site Acquisition Data Console	4-13
	(1). Dual Power Supply	4-13
	(2). Power Supply Control Circuits	4-14
	(3). Switches and Indicators	4-18
	(4). Circuit Description	4-19
	(a). D-c Indications	4-20
	(b). Synchro Circuits	4-26
	(c). Data Switching	4-30
	(d). Radar Control Relays	4-36

TABLE OF CONTENTS (Cont.)

Paragraph | Page

SECTION IV. THEORY OF OPERATION (Cont.)

C. Receiver Site Acquisition Data Console 4-38
(1). Dual Power Supply and Control Circuits, Switches, and Indicators 4-38
(2). Circuit Description 4-38
(a). D-c Indications 4-38
(b). Synchro Circuits 4-41
(c). Data Switching 4-43
(d). Signal Strength and Audio Circuits 4-46
D. Active Acquisition Aid 4-47
(1). General 4-47
(2). Block Diagram Description 4-49
E. Synchro Line Amplifier 4-51
F. Audio Amplifier 4-52
G. Synchro Remoting System 4-53
H. Synchros 4-55
(1). Transmitters and Receivers 4-55
(2). Control Transformers 4-62
I. Typical Servo Systems Utilizing Synchros 4-65

SECTION V. SYSTEM MAINTENANCE

5-1. General 5-1

5-2. Preventive Maintenance 5-1
A. Preventive Maintenance Schedule 5-1
B. Preventive Maintenance Procedures 5-5
(1). Painted Surfaces 5-5
(2). Plated Surfaces 5-5

5-3. Trouble Shooting 5-5
A. D-c Indications 5-5
B. Synchros 5-5
(1). Criteria for Distinguishing Trouble and Misadjustment . 5-6
(2). System Trouble Analysis 5-6

TABLE OF CONTENTS (Cont.)

Paragraph		Page
	SECTION V. SYSTEM MAINTENANCE (Cont.)	
	(3). Circuit Trouble Analysis	5-7
5-4.	Adjustments and Repair	5-8
	A. General	5-8
	B. Synchro Alignment	5-8
	(1). General	5-8
	(2). Synchro Transmitters	5-12
	(a). Transmitter Zeroing Procedure — Complete	5-13
	(b). Transmitter Zeroing Procedure — Simplified	5-14
	(3). Synchro Receivers	5-15
	(a). Receiver Zeroing Procedure	5-16
	(b). Receiver Reversing Procedures	5-17
	1. R1-R2 Interchange	5-17
	2. "Zeroing" at 180 Degrees	5-18
	(4). Control Transformers	5-19
	(a). Control Transformer Zeroing Procedure — Complete	5-19
	(b). Control Transformer Zeroing Procedure — Simplified	5-20
	(5). System Alignment	5-22
	C. Synchro Repair	5-26
	(1). Repair Procedures	5-26
	(2). Disassembly	5-26
	(3). Assembly	5-28
	D. 28 VDC Power Supply	5-28
	(1). Control Circuits	5-29
	(2). Dual Power Supply	5-30
	(a). Adjustment	5-30
	(b). Repair	5-34
	E. Relays	5-36
	F. Switch and Indicator Assemblies	5-37
	(1). Indicators and Operator-Indicator Units	5-37
	(2). Coils	5-37

TABLE OF CONTENTS (Cont.)

Paragraph		Page
	SECTION V. SYSTEM MAINTENANCE (Cont.)	
	(3). Switches	5-37
	G. Synchro Line Amplifier	5-37
	(1). Bench Adjustment	5-38
	(2). In-System Adjustment	5-39
	H. Audio Amplifier	5-40
	(1). Adjustment	5-40
	(2). Repair	5-41
	I. Signal Strength Meter Calibration	5-41
5-5.	Lubrication	5-47
5-6.	Special Tools	5-47
5-7.	Test Equipment	5-47
	SECTION VI. PARTS LIST	
6-1.	General	6-1
6-2.	Other Equipment	6-1
	SECTION VII. MAINTENANCE DRAWINGS	
7-1.	General	7-1

LIST OF ILLUSTRATIONS

Figure	Title	Page
Section I		
1-1	Locations of Project Mercury Sites	xvi
1-2	Acquisition Data Console and Active Acquisition Aid Control Console, Radar Site	1-10
1-3	Acquisition Data Console and Intercom Cabinet, Receiver Site	1-13
1-4	Active Acquisition Aid Receiver Cabinet and Servo Cabinet	1-17
1-5	Active Acquisition Aid Antenna and Pedestal	1-18
1-6	Active Acquisition Aid Amplidyne	1-19
1-7	Active Acquisition Aid Diplexer (Multiplexer)	1-19
1-8	Active Acquisition Aid Triplexer (Multiplexer)	1-20
1-9	Active Acquisition Aid RF Housing	1-20
1-10	Active Acquisition Aid Boresight Antenna and Transmitter	1-21
1-11	Synchro Remoting System Transmitter-Receiver	1-22
1-12	Synchro Reference Voltage Step-up and Step-down Transformers	1-23
1-13	Master-Slave Relay Panel	1-24
1-14	Antenna Drive Power Cutoff Switch and Warning Light	1-25
1-15	Basic Functions of the Acquisition System	1-27
1-16	Acquisition System, Simplified Block Diagram	1-29
1-17	Radar Site Acquisition Data Console, Simplified Schematic Diagram	1-35
1-18	Receiver Site Acquisition Data Console, Simplified Schematic Diagram	1-37
1-19	Synchro Remoting System No. 1, Simplified Block Diagram	1-42
1-20	Site Layout, Point Arguello	1-45
1-21	Acquisition System Equipment Layout, Radar Site LA-24 Building	1-47
1-22	Acquisition System Equipment Layout, FPS-16 Building	1-48
1-23	Acquisition System Equipment Layout, Verlort Radar Van	1-49
1-24	Acquisition System Equipment Layout, Receiver Site Telemetry Building	1-50
1-25	Acquisition System Equipment Layout, Transmitter Building	1-51
Section II		
2-1	Radar Site Acquisition Data Console and Active Acquisition Aid Equipment Outline Dimensions	2-2
2-2	Synchro Remoting System Cabinet, Receiver Site Acquisition Data Console, and Intercom Cabinet Outline Dimensions	2-3

LIST OF ILLUSTRATIONS (Cont.)

Figure	Title	Page
Section II (Cont.)		
2-3	Floor and Pad Mounting Hole Locations	2-7
2-4	Amplidyne Installation	2-8
2-5	Active Acquisition Aid RF Equipment Installation	2-9
2-6	Active Acquisition Aid Boresight Transmitter and Antenna Installation	2-10
2-7	Synchro Line Amplifier in Transmitting Antenna Servo Rack	2-12
Section III		
3-1	Radar Site Acquisition Data Panel	3-8
3-2	Receiver Site Acquisition Data Panel	3-9
3-3	Dual Power Supply	3-10
3-4	Synchro Line Amplifier	3-15
3-5	Intercom Panel	3-15
3-6	Signal Strength Meter Panel	3-16
3-7	Audio Amplifier	3-21
Section IV		
4-1	Acquisition System, Block Diagram	4-9
4-2	Acquisition System D-c Indications, Block Diagram	4-11
4-3	Synchro Reference Voltage Transformation and Distribution, Radar Site	4-13
4-4	Power Supply Control Circuits, Simplified Schematic Diagram	4-15
4-5	Switch Assembly, Exploded View	4-19
4-6	Diagram of Antenna Cable Wrap Limits	4-21
4-7	Synchro and Lamp Indications of Antenna Bearing Relative to Cable Wrap Limits	4-22
4-8	Verlort Radar Control Relay Circuit, Simplified Schematic Diagram	4-36
4-9	FPS-16 Radar Control Relay Circuit, Simplified Schematic Diagram	4-37
4-10	Transmitting and Receiving Antenna Mode Indication Circuit, Simplified Schematic Diagram	4-40
4-11	Relative Coverage by Active Acquisition Aid and Radar	4-48
4-12	Active Acquisition Aid, Simplified Block Diagram	4-49
4-13	Synchro Line Amplifier, Block Diagram	4-52
4-14	Synchro Remoting System, Block Diagram	4-54
4-15	Synchro Transmitter or Receiver, Schematic Diagram	4-55

LIST OF ILLUSTRATIONS (Cont.)

Figure	Title	Page
Section IV (Cont.)		
4-16	Voltages in Synchro Stator Windings	4-57
4-17	Voltages Between Synchro Stator Windings	4-58
4-18	Simple Synchro System with Transmitter and Receiver Rotors at the Same Position, Schematic Diagram	4-59
4-19	Simple Synchro System with Transmitter and Receiver Rotors at Different Positions, Schematic Diagram	4-60
4-20	Control Transformer, Schematic Diagram	4-63
4-21	Control Transformer and Synchro Transmitter Connections, Schematic Diagram	4-64
4-22	Voltage in Rotor Winding of Control Transformer	4-65
4-23	Typical Servo System Utilizing Synchros, Simplified Schematic Diagram	4-66
Section V		
5-1	Synchro Troubles and Symptoms	5-9
5-2	Conditions at Electrical Zero of a Synchro	5-11
5-3	Method of Locating Approximate Position of Synchro Transmitter Electrical Zero	5-13
5-4	Method of Zeroing Synchro Transmitter	5-15
5-5	Method of Zeroing or Reversing Synchro Receiver	5-16
5-6	Method of Locating Approximate Position of Control Transformer Electrical Zero	5-20
5-7	Method of Zeroing Control Transformer	5-21
5-8	Azimuth and Elevation Synchro System, Schematic Diagram	5-23
5-9	Acquisition Data Console Synchro Receiver, Exploded View	5-27
5-10	Power Supply and Control Circuit Output Voltage versus Load Current Characteristics	5-31
5-11	Power Supply Output Voltage versus Load Current Characteristics With Control Circuit Disconnected	5-32
5-12	Power Supply Unit Terminal Board	5-34
5-13	Power Supply Unit and Filter Unit, Parts Location	5-35
5-14	Synchro Line Amplifier, Bench Adjustment Setup	5-38
5-15	Audio Amplifier, Test Setup	5-42
5-16	Audio Amplifier, Terminal Voltage Diagram	5-43

LIST OF ILLUSTRATIONS (Cont.)

Figure	Title	Page
Section V (Cont.)		
5-17	Audio Amplifier, Terminal Resistance Diagram	5-45
5-18	Audio Amplifier, Parts Location	5-47
5-19	Lamp-Filter Tool	5-48
Section VII		
7-1	Radar Site Acquisition Data Console, Schematic Diagram	7-3
7-2	Radar Site Acquisition Data Console, Physical Wiring Diagram	7-5
7-3	Receiver Site Acquisition Data Console, Schematic Diagram	7-7
7-4	Receiver Site Acquisition Data Console, Physical Wiring Diagram	7-9
7-5	Dual Power Supply, Schematic Diagram	7-11
7-6	Dual Power Supply, Physical Wiring Diagram	7-13
7-7	Audio Amplifier, Schematic Diagram	7-15
7-8	Synchro Stator Circuit Connections Between Active Acquisition Aid and Radar Site Acquisition Data Console, Schematic Diagram	7-17
7-9	Synchro Reference Circuit Connections Between Active Acquisition Aid and Radar Site Acquisition Data Console, Schematic Diagram	7-19
7-10	Synchro Circuit Connections Between Verlort Radar and Radar Site Acquisition Data Console, Schematic Diagram	7-21
7-11	Synchro Circuit Connections Between FPS-16 Radar and Radar Site Acquisition Data Console, Schematic Diagram	7-23
7-12	Synchro Circuit Connections Between Radar Site and Receiver Site, Schematic Diagram	7-25
7-13	Synchro Circuit Connections Between Receiver Site and Transmitting Antenna, Schematic Diagram	7-27
7-14	Synchro Reference Circuit Connections Between Transmitting Antenna and Site Power Panel, Schematic Diagram	7-29
7-15	Synchro Stator Circuit Connections Between Receiving Antennas Nos. 1 and 2 and Receiver Site Acquisition Data Console, Schematic Diagram	7-31
7-16	Synchro Reference Circuit Connections Between Receiving Antennas Nos. 1 and 2 and Receiver Site Acquisition Data Console, Schematic Diagram	7-33
7-17	D-c Indication Circuits from External Equipment (except AAA) to Radar Site Acquisition Data Console, Schematic Diagram	7-35

LIST OF ILLUSTRATIONS (Cont.)

Figure	Title	Page
Section VII (Cont.)		
7-18	D-c Indication Circuits from Radar Site Acquisition Data Console to External Equipment, Schematic Diagram	7-37
7-19	Circuits of Active Acquisition Aid Interlocks and D-c Indications to Radar Site Acquisition Data Console, Schematic Diagram	7-39
7-20	Active Acquisition Aid Antenna Safety Circuit, Schematic Diagram	7-41
7-21	FPS-16 Slaving Interlock Circuit, Schematic Diagram	7-43
7-22	D-c Indication Circuits from External Equipment to Receiver Site Acquisition Data Console, Schematic Diagram	7-45
7-23	Signal Strength Indication and Audio Monitor Circuits, Schematic Diagram	7-47
7-24	Acquisition System Interconnecting Cabling Diagram	7-49

LIST OF TABLES

Table	Title	Page
Section I		
1-I	Functions of Each Site	1-3
1-II	Equipment Supplied	1-4
Section II		
2-I	Equipment Mounting Hardware	2-4
Section III		
3-I	Operating Controls, Indicators, and Displays	3-2
3-II	Indicator Checkout Procedure, Radar Site	3-11
3-III	Indicator Checkout Procedure, Receiver Site	3-12
3-IV	Mode Indicating Controls	3-24
Section V		
5-I	Preventive Maintenance Schedule	5-2
5-II	Normal Power Transformer Voltages (T6201, T6202)	5-35
5-III	Acquisition Data Console Relay Coil Resistances	5-36
5-IV	Lubrication Schedule	5-48
5-V	Test Equipment Applications	5-49
Section VI		
6-I	List of Replaceable Electrical Parts for Acquisition Data Console, P/N R651499-1 (Radar Site)	6-2
6-II	List of Replaceable Electrical Parts for Acquisition Data Console, P/N R651498-7 (Receiver Site)	6-9
6-III	List of Replaceable Electrical Parts for Dual Power Supply, P/N R651470-2	6-14
6-IV	List of Replaceable Electrical Parts for Intercom Panel, P/N N654990-6 (Radar Site) and Intercom Panel, P/N N651474-2 (Receiver Site)	6-16
6-V	List of Replaceable Electrical Parts for Audio Amplifier, P/N 653716-1	6-17
6-VI	List of Replaceable Electrical Parts for Miscellaneous Items	6-19

SECTION VI
PARTS LIST

6-1. GENERAL

This section comprises lists of the parts which make up the acquisition data consoles. The lists are as follows:

Equipment	Parts List Table	Parts Location Illustration
Acquisition Data Console, P/N R651499-1 (Radar Site)	6-I	Figure 7-2
Acquisition Data Console, P/N R651498-7 (Receiver Site)	6-II	Figure 7-4
Dual Power Supply, P/N R651470-2	6-III	Figure 7-6
Intercom Panel, P/N N654990-6 (Radar Site)	6-IV	—
Intercom Cabinet Assembly, P/N N651474-2 (Receiver Site)	6-IV	—
Audio Amplifier, P/N 653716-1	6-V	Figure 5-18
Miscellaneous Items	6-VI	—

6-2. OTHER EQUIPMENT

For information on other equipment in the acquisition system, refer to the applicable equipment manuals, listed in table 1-II.

TABLE 6-I. LIST OF REPLACEABLE ELECTRICAL PARTS FOR ACQUISITION DATA CONSOLE (RADAR SITE) P/N R651499-1

Reference Designation	Part Name and Description	Bendix Part No.	Part No. (MIL, JAN, or FSN)	Quan.
B6001	Synchro Display	N681819-3	—	1
B6002	Synchro Display	N681819-2	—	1
B6003	Synchro Display	N681819-3	—	1
B6004	Synchro Display	N681819-2	—	1
B6005	Synchro Display	N681819-3	—	1
B6006	Synchro Display	N681819-2	—	1
B6007	Synchro Display	N681819-3	—	1
B6008, B6009	Synchro Display	N681819-2	—	2
B6010	Synchro Display	N681819-3	—	1
	Synchro Transmitter Assembly, consisting of:	N654986-1	—	2
B6011, B6012	Synchro Transmitter	N683953-1	—	1
	Spring, Compression	A689693-1	—	1
	Bushing, Polyamide	A689682-1	—	1
	Bushing, Polyamide	A689683-2	—	1
CR6001, CR6002	Diode, Silicon	A683966-1	—	2
CR6003, CR6004	Diode, Zener (18 volts)	A683971-1	—	2
DS6001 through DS6008	Lamp, GE 327	—	AN3140-327	8
DS6010, DS6011	Lamp, GE 327	—	AN3140-327	2

TABLE 6-I. LIST OF REPLACEABLE ELECTRICAL PARTS FOR ACQUISITION DATA CONSOLE (RADAR SITE) P/N R651499-1 (Cont.)

Reference Designation	Part Name and Description	Bendix Part No.	Part No. (MIL, JAN, or FSN)	Quan.
DS6013 through DS6018	Lamp, GE 327	—	AN3140-327	6
DS6020, DS6021	Lamp, GE 327	—	AN3140-327	2
DS6023 through DS6046	Lamp, GE 327	—	AN3140-327	24
DS6047, DS6048	Lamp, DIALCO No. 39	A683817-3	—	2
DS6049, DS6050	Lamp, GE 327	—	AN3140-327	2
K6001 through K6004	Relay, Sensitive, 1000 ohms, 4.5 ma DPDT	A683968-1	—	4
K6005 through K6007	Relay, 28 VDC, 6PDT	A683969-3	—	3
K6010, K6011	Relay, 115 VAC, 6PST	A696740-1	—	2
P6001 through P6010	Connector	—	MS3106A-14S-2S	10
P6011 through P6014	Connector	—	MS3106R-22-14S	4

TABLE 6-I. LIST OF REPLACEABLE ELECTRICAL PARTS FOR ACQUISITION DATA CONSOLE (RADAR SITE) P/N R651499-1 (Cont.)

Reference Designation	Part Name and Description	Bendix Part No.	Part No. (MIL, JAN, or FSN)	Quan.
S6001	Switch Assembly, consisting of:	—	—	—
	Switch, 4PDT (momentary)	A681845-3	—	1
	Lamps, DS6007, DS6008	—	—	2
	Oper. Indicator Unit w/coil	A681843-3	—	1
	Display Screen	A681848-2	—	1
	Color Filter (yellow)	A683911-2	—	2
S6002	Switch Assembly, consisting of:	—	—	—
	Switch, 4PDT (momentary)	A681845-3	—	1
	Lamps, DS6017, DS6018	—	—	2
	Oper. Indicator Unit w/coil	A681843-3	—	1
	Display Screen	A681848-2	—	1
	Color Filter (yellow)	A683911-2	—	2
S6003	Switch Assembly, consisting of:	—	—	—
	Switch, 4PDT (momentary)	A681845-3	—	1
	Lamps, DS6027, DS6028	—	—	2
	Oper. Indicator Unit w/coil	A681843-3	—	1
	Display Screen	A681848-2	—	1
	Color Filter (yellow)	A683911-2	—	2
S6004	Switch Assembly, consisting of:	—	—	—
	Switch 4PDT (momentary)	A681845-3	—	1
	Lamps, DS6033, DS6034	—	—	2
	Oper. Indicator Unit w/coil	A681843-3	—	1

TABLE 6-I. LIST OF REPLACEABLE ELECTRICAL PARTS FOR ACQUISITION DATA CONSOLE (RADAR SITE) P/N R651499-1 (Cont.)

Reference Designation	Part Name and Description	Bendix Part No.	Part No. (MIL, JAN, or FSN)	Quan.
S6004 (Cont.)	Display Screen	A681848-2	—	1
	Color Filter (yellow)	A683911-2	—	2
S6005	Switch Assembly, consisting of:	—	—	—
	Switch 4PDT (momentary)	A681845-3	—	1
	Lamps DS6035, DS6036	—	—	2
	Oper. Indicator Unit w/coil	A681843-3	—	1
	Display Screen	A681848-2	—	1
	Color Filter (yellow)	A683911-2	—	2
S6006	Switch Assembly, consisting of:	—	—	—
	Switch, 3PDT (momentary)	A681845-4	—	1
	Lamps, DS6039, DS6040, DS6041, DS6042	—	—	4
	Oper. Indicator Unit w/coil	A681843-3	—	1
	Display Screen	A681848-2	—	1
	Color Filter (red)	A683911-1	—	2
	Color Filter (green)	A683911-3	—	2
S6007	Switch Assembly, consisting of:	—	—	—
	Switch, 3PDT (momentary)	A681845-4	—	1
	Lamps, DS6043, DS6044, DS6045, DS6046	—	—	4
	Oper. Indicator Unit w/coil	A681843-3	—	1
	Display Screen	A681848-2	—	1
	Color Filter (red)	A683911-1	—	2
	Color Filter (green)	A683911-3	—	2

TABLE 6-I. LIST OF REPLACEABLE ELECTRICAL PARTS FOR ACQUISITION DATA CONSOLE (RADAR SITE) P/N R651499-1 (Cont.)

Reference Designation	Part Name and Description	Bendix Part No.	Part No. (MIL, JAN, or FSN)	Quan.
T6001	Transformer	A665085-1	—	1
TB6001	Terminal Board	L678289-8	—	1
TB6002 through TB6017	Terminal Board	L678288-8	—	16
TB6027 through TB6030	Terminal Board	L678288-8	—	4
X6001	Indicator Unit:	A683961-2	—	1
	Lamps DS6001, DS6002	—	—	2
	Display Screen	A681848-2	—	1
	Color Filter (yellow)	A683911-2	—	2
X6002	Indicator Unit:	A683961-2	—	1
	Lamps, DS6003, DS6004, DS6005, DS6006	—	—	4
	Display Screen	A681848-4	—	1
	Color Filter (red)	A683911-1	—	2
	Color Filter (green)	A683911-3	—	2
X6003	Indicator Unit:	A683961-2	—	1
	Lamps, DS6010, DS6011	—	—	2
	Display Screen	A681848-2	—	1
	Color Filter (yellow)	A683911-2	—	2

TABLE 6-I. LIST OF REPLACEABLE ELECTRICAL PARTS FOR ACQUISITION DATA CONSOLE (RADAR SITE) P/N R651499-1 (Cont.)

Reference Designation	Part Name and Description	Bendix Part No.	Part No. (MIL, JAN, or FSN)	Quan.
X6004	Indicator Unit:	A683961-2	—	1
	Lamps, DS6013, DS6014, DS6015, DS6016	—	—	4
	Display Screen	A681848-4	—	1
	Color Filter (red)	A683911-1	—	2
	Color Filter (green)	A683911-3	—	2
X6005	Indicator Unit:	A683961-2	—	1
	Lamps DS6020, DS6021	—	—	2
	Display Screen	A681848-2	—	1
	Color Filter (Yellow)	A683911-2	—	2
X6006	Indicator Unit:	A683861-2	—	1
	Lamps, DS6023, DS6024, DS6025, DS6026	—	—	4
	Display Screen	A681848-4	—	1
	Color Filter (red)	A683911-1	—	2
	Color Filter (green)	A683911-3	—	2
X6007	Indicator Unit:	A683961-2	—	1
	Lamps, DS6029, DS6030, DS6031, DS6032	—	—	4
	Display Screen	A681848-4	—	1
	Color Filter (red)	A683911-1	—	2
	Color Filter (green)	A683911-3	—	2
X6008	Indicator Unit:	A683961-2	—	1
	Lamps DS6037, DS6038	—	—	2
	Display Screen	A681848-2	—	1

TABLE 6-I. LIST OF REPLACEABLE ELECTRICAL PARTS FOR ACQUISITION DATA CONSOLE (RADAR SITE) P/N R651499-1 (Cont.)

Reference Designation	Part Name and Description	Bendix Part No.	Part No. (MIL, JAN, or FSN)	Quan.
X6008 (Cont.)	Color Filter (red)	A683911-1	—	2
X6009	Indicator Unit:	A683961-2	—	1
	Lamps, DS6049, DS6050	—	—	2
	Display Screen	A681848-2	—	1
	Color Filter (green)	A683911-3	—	2
XDS6047, XDS6048	Pilot Light Assembly	A683815-1	—	2
XS6001 through XS6007	Oper. Indicator Unit w/coil	A681843-3	—	7
P6201	Connector	—	MS3106R-18-12S	1
P6202	Connector	—	MS3106R-20-7S	1
	Handwheel	C294673-1	—	2
	Intercom Panel	N654990-6	—	1
	Synchro Line Amplifier, Milgo P/N 1007-10B	A683820-1	—	2
	Dual Power Supply	R651470-2	—	1
	Telephone Jack	A683777-1	—	10
	Barrier Strips (used with indicator units and switch assemblies)	A681860-2	—	29

TABLE 6-II. LIST OF REPLACEABLE ELECTRICAL PARTS FOR ACQUISITION DATA CONSOLE (RECEIVER SITE) P/N R651498-7

Reference Designation	Part Name and Description	Bendix Part No.	Part No. (MIL, JAN, or FSN)	Quan.
B6001 through B6004	Synchro Display	N681819-3	—	4
B6005 through B6009	Synchro Display	N681819-2	—	5
B6010	Synchro Display	N681819-3	—	1
B6011, B6012	Synchro Transmitter Assembly, consisting of:	N654986-1	—	2
	Synchro Transmitter	N683953-1	—	1
	Spring, Compression	A689693-1	—	1
	Bushing, Polyamide	A689682-1	—	1
	Bushing, Polyamide	A689683-2	—	1
CR6001, CR6002	Diode, Silicon	A683966-1	—	2
CR6003, CR6004	Diode, Zener (18 volts)	A683971-1	—	2
DS6001 through DS6028	Lamp, GE 327	—	AN3140-327	28
DS6039, DS6040	Lamp, GE 327	—	AN3140-327	2
K6001, K6002	Relay, Sensitive, 1000 ohms, 4.5 ma (DPDT)	A683968-1	—	2
K6003, K6004	Relay, 28 VDC, 6PDT	A683969-3	—	2
K6005 through K6008	Relay, Sensitive, 1000 ohms, 4.5 ma (DPDT)	A683969-1	—	4

TABLE 6-II. LIST OF REPLACEABLE ELECTRICAL PARTS FOR ACQUISITION DATA CONSOLE (RECEIVER SITE) P/N R651498-7 (Cont.)

Reference Designation	Part Name and Description	Bendix Part No.	Part No. (MIL, JAN, or FSN)	Quan.
M6001 through M6004	Microammeter, 0-50 micro-amps	N683770-1	—	4
P6001 through P6010	Connector	—	MS3106A-14S-2S	10
P6011, P6012	Connector	—	MS3106R-22-14S	2
R6001 through R6004	Potentiometer, Variable, 500K	C219564-6	—	4
R6005 through R6008	Resistor, Fixed, 240K, ±5%, 1/2W	—	RC20GF244J	4
R6009	Potentiometer, Variable Comp., 1 meg, ±20%	—	RV4NAYSD105B	1
S6001	Switch Assembly, consisting of:	—	—	—
	Switch, 4PDT (momentary)	A681845-3	—	1
	Lamps, DS6001, DS6002	—	—	2
	Oper. Indicator Unit w/coil	A681843-3	—	1
	Display Screen	A681848-2	—	1
	Color Filter (yellow)	A683911-2	—	2
S6002	Switch Assembly, consisting of:	—	—	—
	Switch, 4PDT (momentary)	A681845-3	—	1
	Lamps, DS6017, DS6018	—	—	2
	Oper. Indicator Unit w/coil	A681843-3	—	1

TABLE 6-II. LIST OF REPLACEABLE ELECTRICAL PARTS FOR ACQUISITION DATA CONSOLE (RECEIVER SITE) P/N R651498-7 (Cont.)

Reference Designation	Part Name and Description	Bendix Part No.	Part No. (MIL, JAN, or FSN)	Quan.
S6002 (Cont.)	Display Screen	A681848-2	—	1
	Color Filter (yellow)	A683911-2	—	2
S6003	Switch Assembly, consisting of:	—	—	—
	Switch, 3PDT (momentary)	A681845-4	—	1
	Lamps, DS6021, DS6022, DS6023, DS6024	—	—	4
	Oper. Indicator Unit w/coil	A681843-3	—	1
	Display Screen	A681848-2	—	1
	Color Filter (red)	A683911-1	—	2
	Color Filter (green)	A683911-3	—	2
S6004	Switch Assembly, consisting of:	—	—	—
	Switch 3PDT (momentary)	A681845-4	—	1
	Lamps, DS6025, DS6026, DS6027, DS6028	—	—	4
	Oper. Indicator Unit w/coil	A681843-3	—	1
	Display Screen	A681848-2	—	1
	Color Filter (red)	A683911-1	—	2
	Color Filter (green)	A683911-3	—	2
S6005	Switch, Rotary	L218600-33	—	1
TB6001	Terminal Board	L678289-8	—	1
TB6002 through TB6017	Terminal Board	L678288-8	—	16

TABLE 6-II. LIST OF REPLACEABLE ELECTRICAL PARTS FOR ACQUISITION DATA CONSOLE (RECEIVER SITE) P/N R651498-7 (Cont.)

Reference Designation	Part Name and Description	Bendix Part No.	Part No. (MIL, JAN, or FSN)	Quan.
X6001	Indicator Unit:	A683961-2	—	1
	Lamps, DS6001, DS6002	—	—	2
	Display Screen	A681848-2	—	1
	Color Filter (red)	A683911-1	—	2
X6002	Indicator Unit:	A683961-2	—	1
	Lamps, DS6003, DS6004, DS6005, DS6006	—	—	4
	Display Screen	A681848-4	—	1
	Color Filter (red)	A683911-1	—	2
	Color Filter (green)	A683911-3	—	2
X6003	Indicator Unit:	A683961-2	—	1
	Lamps, DS6007, DS6008, DS6009, DS6010	—	—	4
	Display Screen	A681848-4	—	1
	Color Filter (red)	A683911-1	—	2
	Color Filter (green)	A683911-3	—	2
X6004	Indicator Unit:	A683961-2	—	1
	Lamps, DS6011, DS6012, DS6013, DS6014	—	—	4
	Display Screen	A681848-4	—	1
	Color Filter (red)	A683911-1	—	2
	Color Filter (green)	A683911-3	—	2
X6005	Indicator Unit:	A683961-2	—	1
	Lamps, DS6019, DS6020	—	—	2
	Display Screen	A681848-2	—	1

TABLE 6-II. LIST OF REPLACEABLE ELECTRICAL PARTS FOR ACQUISITION DATA CONSOLE (RECEIVER SITE) P/N R651498-7 (Cont.)

Reference Designation	Part Name and Description	Bendix Part No.	Part No. (MIL, JAN, or FSN)	Quan.
X6005 (Cont.)	Color Filter (green)	A682911-3	—	2
X6006	Indicator Unit:	A683961-2	—	1
	Lamps, DS6039, DS6040	—	—	2
	Display Screen	A681848-2	—	1
	Color Filter (green)	A682911-3	—	2
XDS6029 through XDS6038	Pilot Light Assembly	A683815-1	—	10
XS6001 through XS6004	Oper. Indicator Unit w/coil	A681843-3	—	4
P6201	Connector	—	MS3106R-18-12S	1
P6202	Connector	—	MS3106R-20-7S	1
	Handwheel	C294673-1	—	2
	Knob	C294634-1	—	2
	Telephone Jack, WECO P/N 238A	A683777-1	—	5
	Audio Amplifier, Cubic Corp. P/N 18598-1	653716-1	—	1
	Synchro Line Amplifier, Milgo P/N 1007-10B	A683820-1	—	1
	Dual Power Supply	R651470-2	—	1
	Barrier Strips (used with indicator units and switch assemblies)	A681860-2	—	20

TABLE 6-III. LIST OF REPLACEABLE ELECTRICAL PARTS FOR DUAL POWER SUPPLY, P/N R651470-2

Reference Designation	Part Name and Description	Bendix Part No.	Part No. (MIL, JAN, or FSN)	Quan.
DS6201	Lamp, NE-51	C221315-1	—	1
F6201 through F6204	Fuse	C221603-502	—	4
FL6201	Filter, Dressen-Barnes Model 21-105	A681997-1	—	1
C6205	Capacitor, 50 WVDC, 4000 uf	—	—	1
C6207	Capacitor, 50 WVDC, 4000 uf	—	—	1
C6209	Capacitor, 50 WVDC, 4000 uf	—	—	1
L6201	Choke, Dressen-Barnes 512910	—	—	1
R6201	Resistor, ohmite, 600 ohm, 5W	—	—	1
FL6202	Filter, Dressen-Barnes Model 21-105	A681997-1	—	1
C6206	Capacitor, 50 WVDC, 4000 uf	—	—	1
C6208	Capacitor, 50 WVDC, 4000 uf	—	—	1
C6210	Capacitor, 50 WVDC, 4000 uf	—	—	1
L6202	Choke, Dressen-Barnes 512910	—	—	1
R6202	Resistor, ohmite, 600 ohms, 5W	—	—	1
J6201	Receptacle Box	—	MS3102R-18-12P	1
J6202	Receptacle Box	—	MS3102R-20-7P	1
PS6201	Power Supply, Dressen-Barnes Model 21-103	A681999-3	—	1
C6201	Capacitor, 50 WVDC, 4000 uf	—	—	1
C6203	Capacitor, 50 WVDC, 4000 uf	—	—	1
CR6201	Diode, 1N2129, International Rectifier Type X25HB10	—	—	1

TABLE 6-III. LIST OF REPLACEABLE ELECTRICAL PARTS FOR DUAL POWER SUPPLY, P/N R651470-2 (Cont.)

Reference Designation	Part Name and Description	Bendix Part No.	Part No. (MIL, JAN, or FSN)	Quan.
CR6203	Diode, 1N2129, International Rectifier Type X25HB10	—	—	1
CR6205	Diode, 1N2129, International Rectifier Type X25HB10	—	—	1
CR6207	Diode, 1N2129, International Rectifier Type X25HB10	—	—	1
F6205	Fuse, 10 amp	—	—	1
T6201	Transformer, Dressen-Barnes 511721	—	—	1
PS6202	Power Supply, Dressen-Barnes Model 21-103	A681999-3	—	1
C6202	Capacitor, 50 WVDC 4000 μf	—	—	1
C6204	Capacitor, 50 WVDC 4000 μf	—	—	1
CR6202	Diode, 1N2129, International Rectifier Type X25HB10	—	—	1
CR6204	Diode, 1N2129, International Rectifier Type X25HB10	—	—	1
CR6208	Diode, 1N2129, International Rectifier Type X25HB10	—	—	1
F6206	Fuse, 10 amp	—	—	1
T6202	Transformer, Dressen-Barnes 511721	—	—	1
XDS6201	Light, Indicator	C221313-7	—	1
XF6201 through XF6204	Post, Fuse, 3 AG	A683967-1	—	4

TABLE 6-IV. LIST OF REPLACEABLE ELECTRICAL PARTS FOR INTERCOM PANEL, P/N N654990-6 AND INTERCOM CABINET ASSEMBLY P/N N651474-2

Reference Designation	Part Name and Description	Bendix Part No.	Part No. (MIL, JAN, or FSN)	Quan.
DS6401	Buzzer, WECO Part Number 7F-42	A683505-1	—	1
R6401	Dual Potentiometer, WECO P/N KS13754	A683378-1	—	1
Z6401 through Z6404	Key	A683775-1	—	4
	Knob	C294634-1	—	1
	ASSOCIATED PARTS			
	Connector and Cable Assembly	A683543-1	—	4
	Connector	A683542-1	—	1
	Note: The Intercom Cabinet Assembly is a separate unit, used at receiver site only. The Intercom panel is part of the console at the radar site only.			

TABLE 6-V. LIST OF REPLACEABLE ELECTRICAL PARTS FOR AUDIO AMPLIFIER, P/N 653716-1

Reference Designation	Part Name and Description	Bendix Part No.	Part No. (MIL, JAN, or FSN)	Quan.
C1	Capacitor, .047 µf, 400V, ±10%	—	CP05A1EE473K	1
C2	Capacitor, .047 µf, 400V, ±10%	—	CP05A1EE473K	1
C3	Capacitor, 25 µf, 50V, TVA 1306, Sprague	—	—	1
C4	Capacitor, .022 µf, 200V, ±10%	—	CP05A1EC223K	1
C5	Capacitor, 10 µf, 450V, TVA 1705, Sprague	—	—	1
C6	Capacitor, 10 µf, 450V, TVA 1705, Sprague	—	—	1
C7	Capacitor, 10 µf, 450V, TVA 1705, Sprague	—	—	1
F1	Fuse, 1 amp., 3 AG buss	—	—	1
J1	Phone Jack, LS2-A, Mallory	—	—	1
J2	Phone Jack, LS2-A, Mallory	—	—	1
J3	Connector	—	MS3102A-10SL-4P	1
LS1	Speaker, 57A21, Quam	—	—	1
R1	Resistor, 3.3K, 1/2W, ±10%	—	RC20GF332K	1
R2	Resistor, 470K, 1/2W, ±10%	—	RC20GF474K	1
R3	Resistor, 1K, 1/2W, ±10%	—	RC20GF102K	1
R4	Not Used			
R5	Resistor, 100K, 1/2W, ±10%	—	RC20GF104K	1
R6	Resistor, 150K, 1/2W, ±10%	—	RC20GF154K	1
R7	Resistor, 220Ω, 1W, ±10%	—	RC32GF221K	1
R8	Resistor, 10Ω, 2W, ±10%	—	RC43GF100K	1
R9	Resistor, 510Ω, 1W, ±10%	—	RC32GF511K	1

TABLE 6-V. LIST OF REPLACEABLE ELECTRICAP PARTS FOR AUDIO AMPLIFIER, P/N 653716-1 (Cont.)

Reference Designation	Part Name and Description	Bendix Part No.	Part No. (MIL, JAN, or FSN)	Quan.
R10	Resistor, 22K, 1W, ±10%	—	RC32GF223K	1
R11	Resistor, 150K, 1/2W, ±10%	—	RC20GF154K	1
R12	Resistor, 10Ω, 2W, ±10%	—	RC42GF100K	1
S1	Switch ST50N	—	—	1
S2	Switch ST50N	—	—	1
T1	Transformer, PHC-40, Chicago	—	—	1
T2	Transformer, HS-1, TRIAD	—	—	1
T3	Transformer, HS-73, TRIAD	—	—	1
TB1	Terminal Board	L678008-2	—	1
V1	Electron Tube, 6203	—	—	1
V2	Electron Tube 5751	—	—	1
V3	Electron Tube 6AQ5	—	—	1

TABLE 6-VI. LIST OF REPLACEABLE ELECTRICAL PARTS FOR MISCELLANEOUS ITEMS

Reference Designation	Part Name and Description	Bendix Part No.	Part No. (MIL, JAN, or FSN)	Quan.
	Transformer, Step-up, 115 VAC pri; 480 VAC sec.	A665084-1	—	1
	Transformer, Step-down, 480 VAC pri; 115 VAC sec.	A665085-1	—	2
	Cutoff Switch and Warning Light Assembly, consisting of:	L653858-1	—	1
	Switch and box, ERTA 12022	A683229-1	—	1
	Warning light assy.	A683135-1	—	1
	Lamp, incandescent	A120680-1	—	1
	Cable	689846-2	—	
	Panel, Master-Slave Relay,	653770-1	—	1
	Terminal board	L678288-12	—	2
K1	Relay, 28 VDC, 6PDT	A683969-3	—	1
	Note: For FPS-16 radar control relay, refer to parts list for data switch unit in Radar Tracking System Manual, MS-101.			

SECTION VII
MAINTENANCE DRAWINGS

7-1. GENERAL

The drawings included in this section are listed below. It should be noted that those schematics which show connections or circuits involving two or more separate pieces of equipment are not in all cases complete in regard to the internal circuits of the equipment. For complete internal circuits, see the schematics of the individual pieces of equipment. The schematics of individual pieces of equipment are included in this section or in the individual equipment manuals, listed in table 1-II.

Figure Number	Title	Page
7-1	Radar Site Acquisition Data Console, Schematic Diagram	7-3
7-2	Radar Site Acquisition Data Console, Physical Wiring Diagram	7-5
7-3	Receiver Site Acquisition Data Console, Schematic Diagram	7-7
7-4	Receiver Site Acquisition Data Console, Physical Wiring Diagram	7-9
7-5	Dual Power Supply, Schematic Diagram	7-11
7-6	Dual Power Supply, Physical Wiring Diagram	7-13
7-7	Audio Amplifier, Schematic Diagram	7-15
7-8	Synchro Stator Circuit Connections between Active Acquisition Aid and Radar Site Acquisition Data Console, Schematic Diagram	7-17
7-9	Synchro Reference Circuit Connections between Active Acquisition Aid and Radar Site Acquisition Data Console, Schematic Diagram	7-19
7-10	Synchro Circuit Connections between Verlort Radar and Radar Site Acquisition Data Console, Schematic Diagram	7-21
7-11	Synchro Circuit Connections between FPS-16 Radar and Radar Site Acquisition Data Console, Schematic Diagram	7-23
7-12	Synchro Circuit Connections between Radar Site and Receiver Site, Schematic Diagram	7-25
7-13	Synchro Circuit Connections between Receiver Site and Transmitting Antenna, Schematic Diagram	7-27
7-14	Synchro Reference Circuit Connections between Transmitting Antenna and Site Power Panel, Schematic Diagram	7-29
7-15	Synchro Stator Circuit Connections between Receiving Antennas Nos. 1 and 2 and Receiver Site Acquisition Data Console, Schematic Diagram	7-31

Figure Number	Title	Page
7-16	Synchro Reference Circuit Connections between Receiving Antennas Nos. 1 and 2 and Receiver Site Acquisition Data Console, Schematic Diagram	7-33
7-17	D-c Indication Circuits from External Equipment (except AAA) to Radar Site Acquisition Data Console, Schematic Diagram	7-35
7-18	D-c Indication Circuits from Radar Site Acquisition Data Console to External Equipment, Schematic Diagram	7-37
7-19	Circuits of Active Acquisition Aid Interlocks and D-c Indications to Radar Site Acquisition Data Console, Schematic Diagram	7-39
7-20	Active Acquisition Aid Antenna Safety Circuit, Schematic Diagram	7-41
7-21	FPS-16 Slaving Interlock Circuit, Schematic Diagram	7-43
7-22	D-c Indication Circuits from External Equipment to Receiver Site Acquisition Data Console, Schematic Diagram	7-45
7-23	Signal Strength Indication and Audio Monitor Circuits, Schematic Diagram	7-47
7-24	Acquisition System Interconnecting Cabling Diagram	7-49

WARNING

The equipment described in this manual employs voltages which are dangerous. Use appropriate caution when working on this equipment.

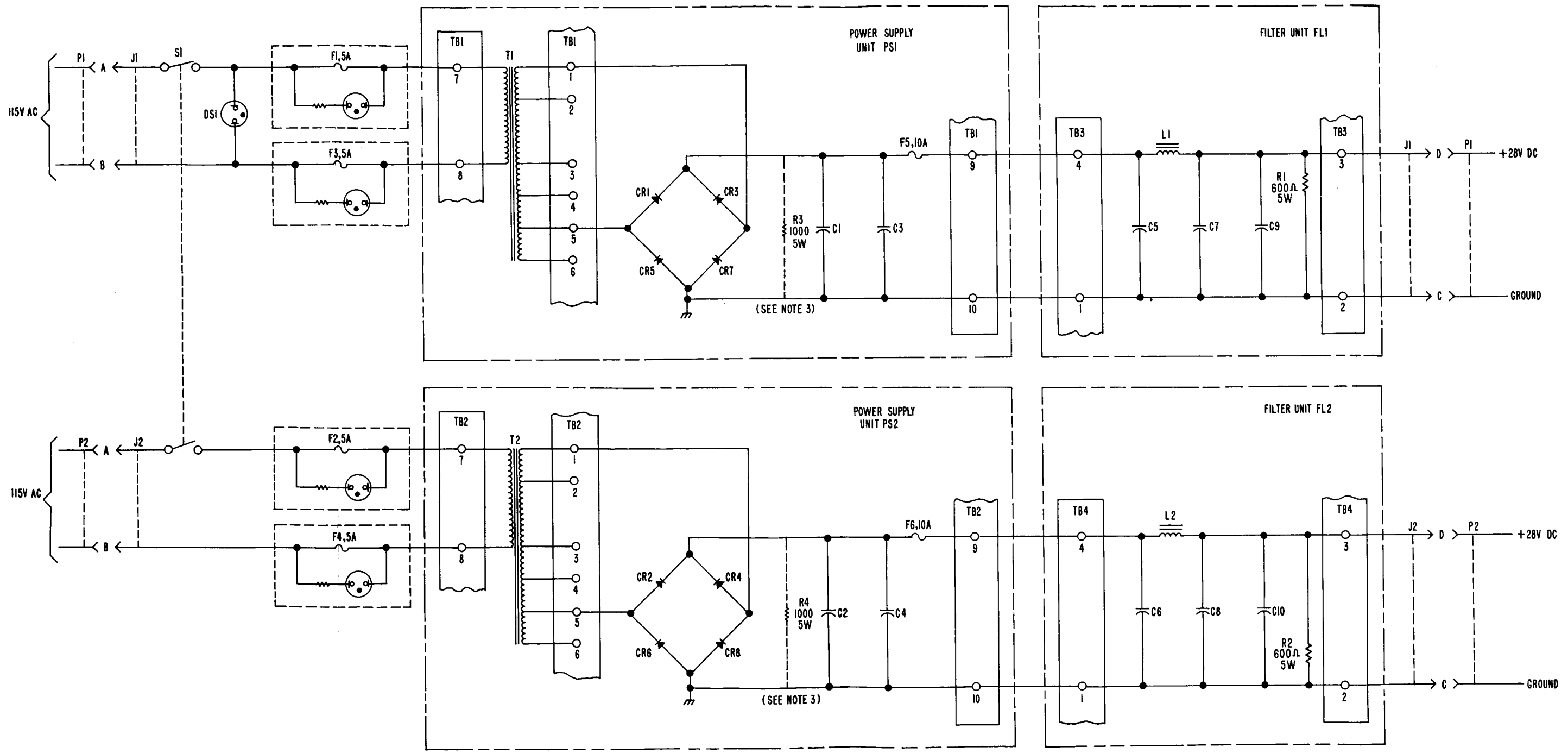

NOTES:
1. ADD 6200 TO ALL REFERENCE DESIGNATIONS IN THIS UNIT.
2. ALL CAPACITORS ARE 4000 UF 50VDC.
3. BLEEDER RESISTORS R3 AND R4 NOT USED ON SOME MODELS.

Figure 7-5. Dual Power Supply, Schematic Diagram

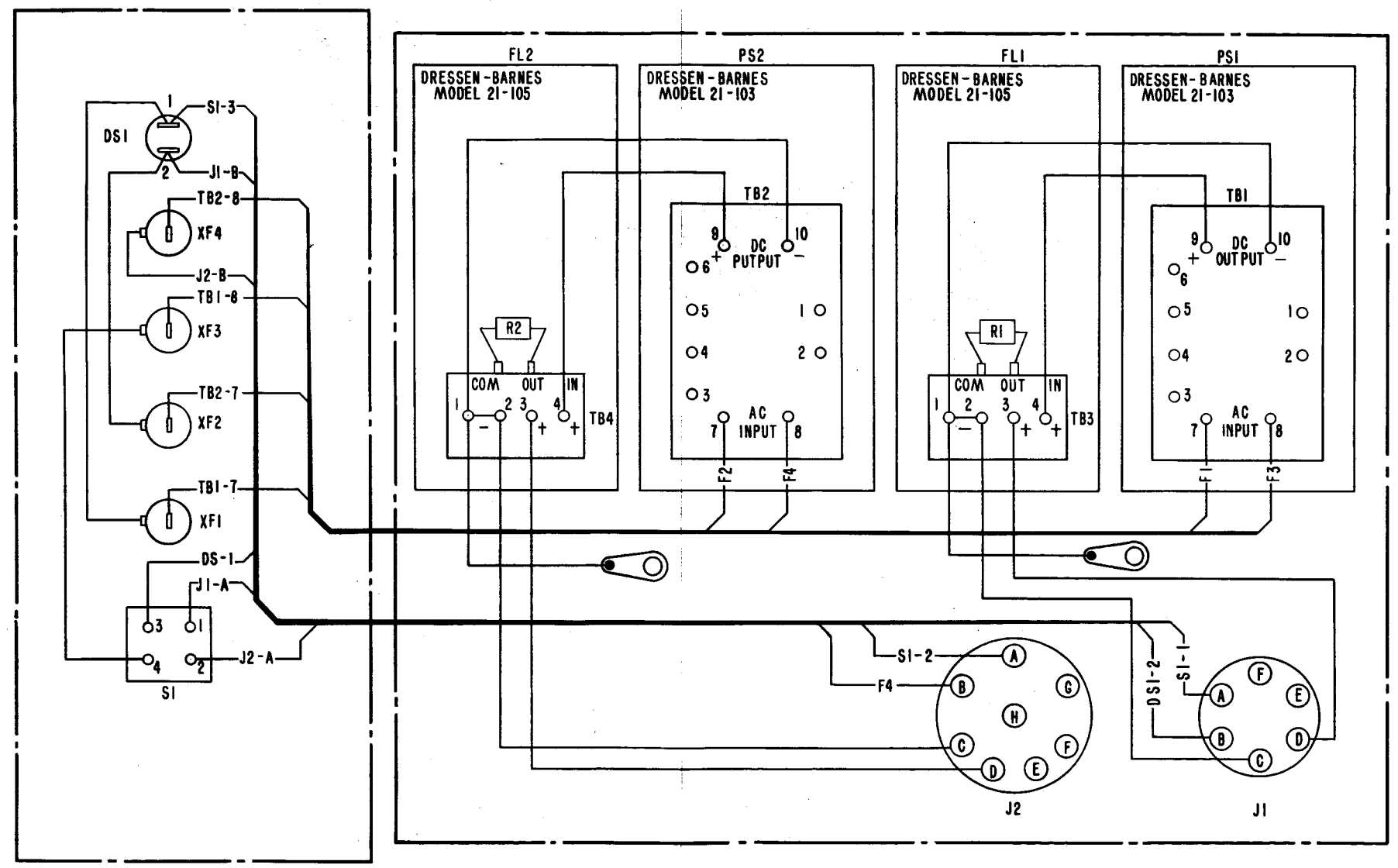

NOTE:
ADD 6200 TO ALL REFERENCE DESIGNATIONS IN THIS UNIT.

Figure 7-6. **Dual Power Supply**, Physical Wiring Diagram

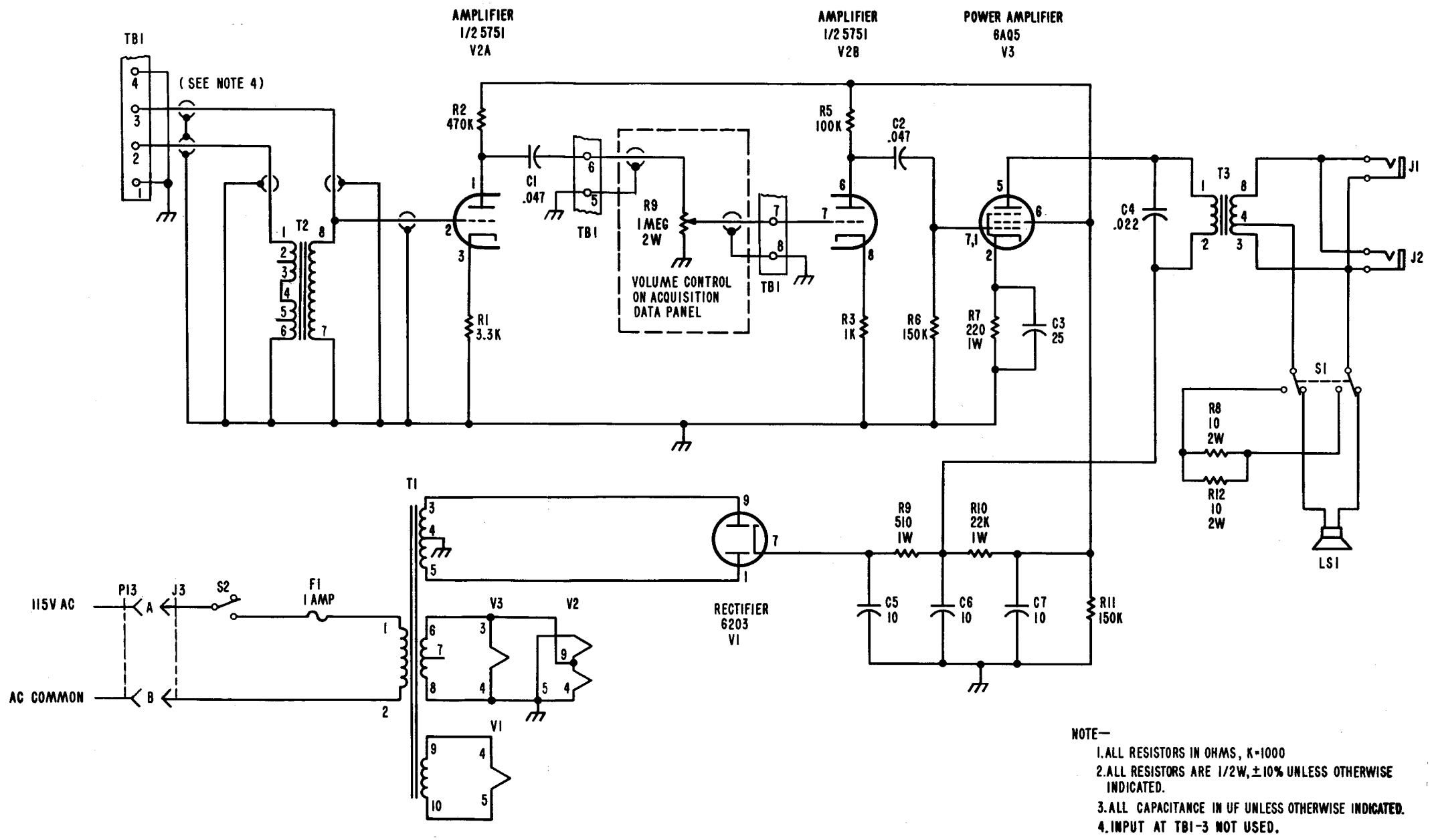

NOTE—
1. ALL RESISTORS IN OHMS, K=1000
2. ALL RESISTORS ARE 1/2W, ±10% UNLESS OTHERWISE INDICATED.
3. ALL CAPACITANCE IN UF UNLESS OTHERWISE INDICATED.
4. INPUT AT TB1-3 NOT USED.

Figure 7-7. Audio Amplifier, Schematic Diagram

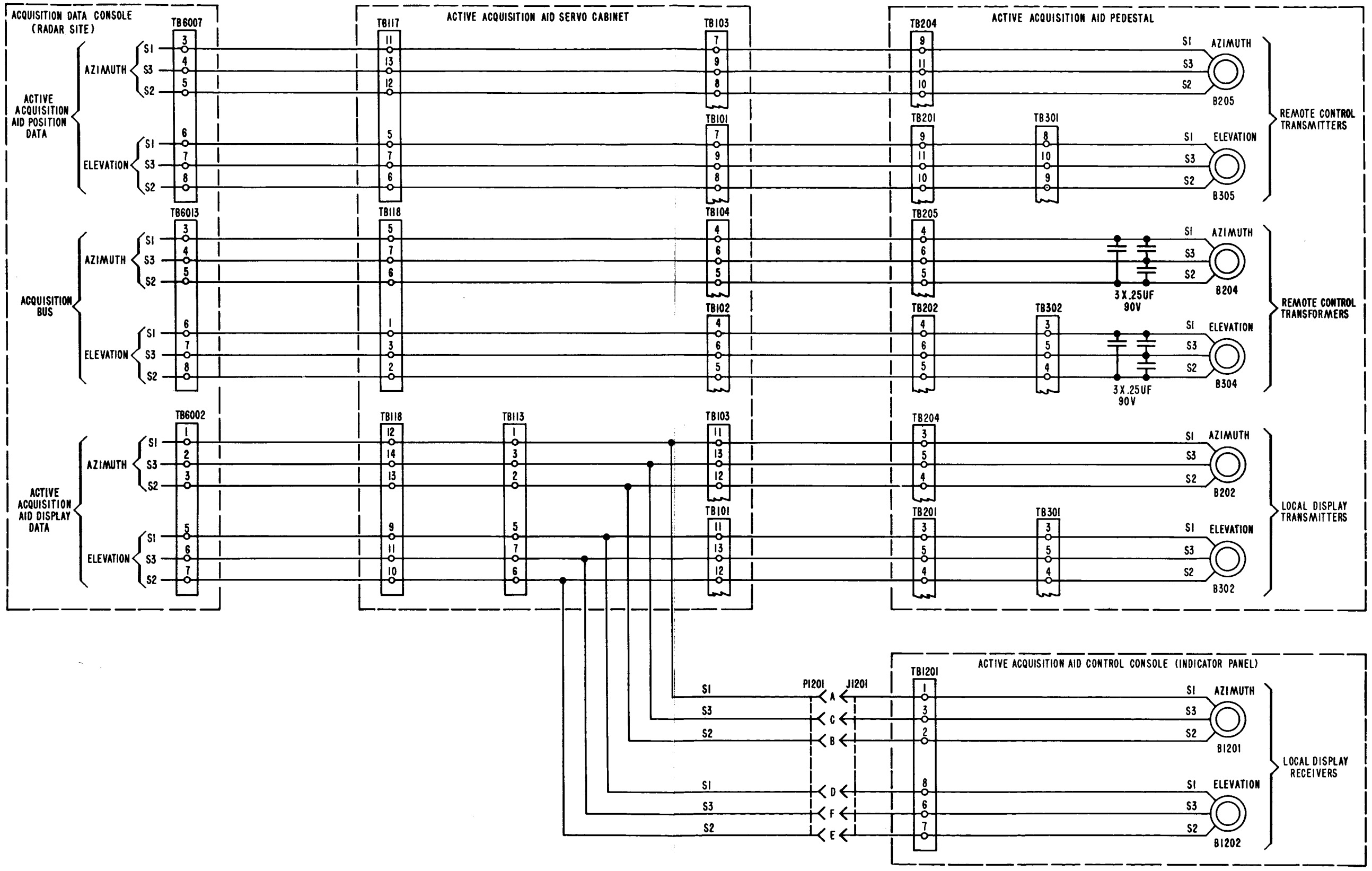

Figure 7-8. Synchro Stator Circuit Connections between Active Acquisition Aid and Radar Site Acquisition Data Console, Schematic Diagram

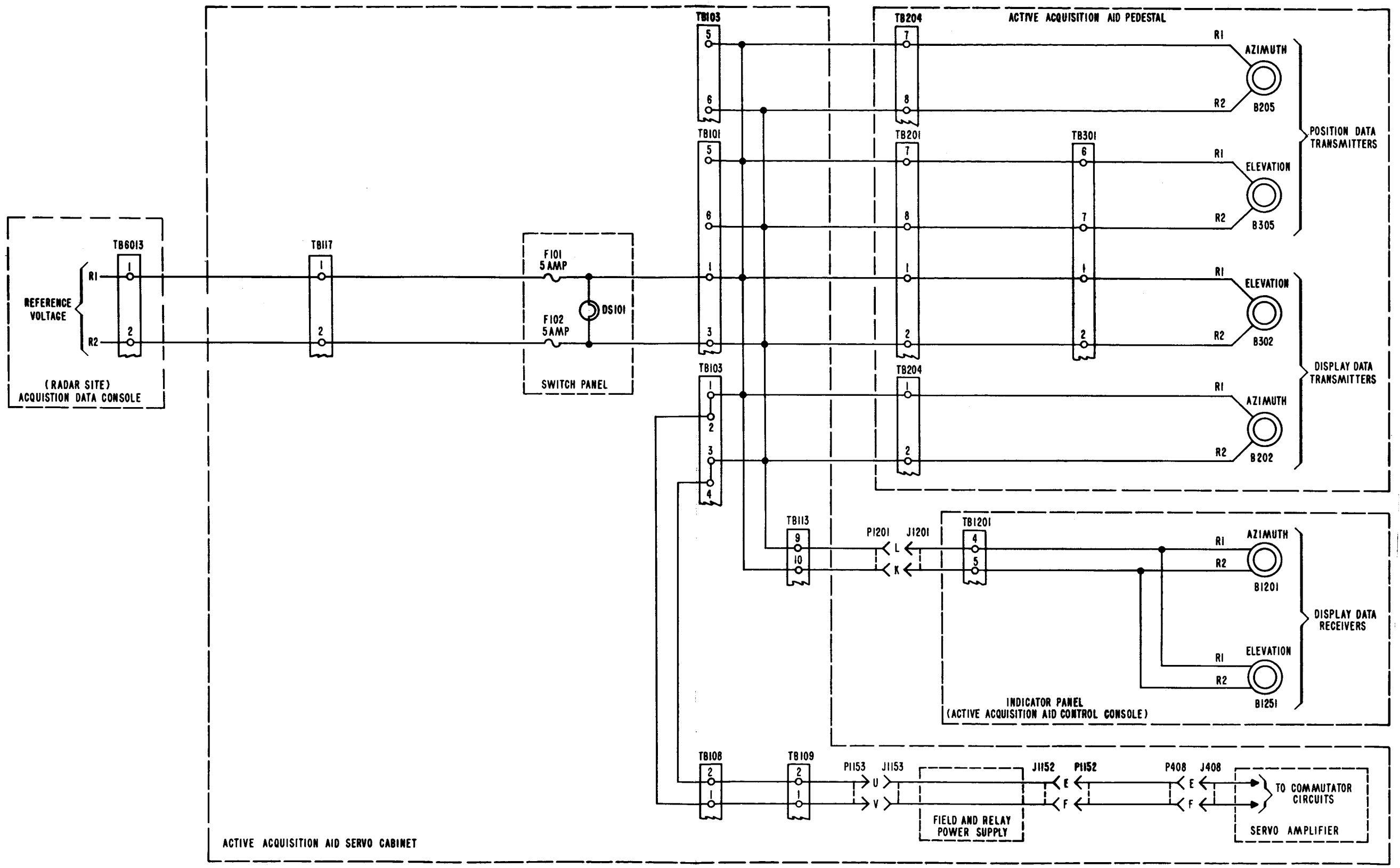

Figure 7-9. Synchro Reference Circuit Connections between Active Acquisition Aid and Radar Site Acquisition Data Console, Schematic Diagram

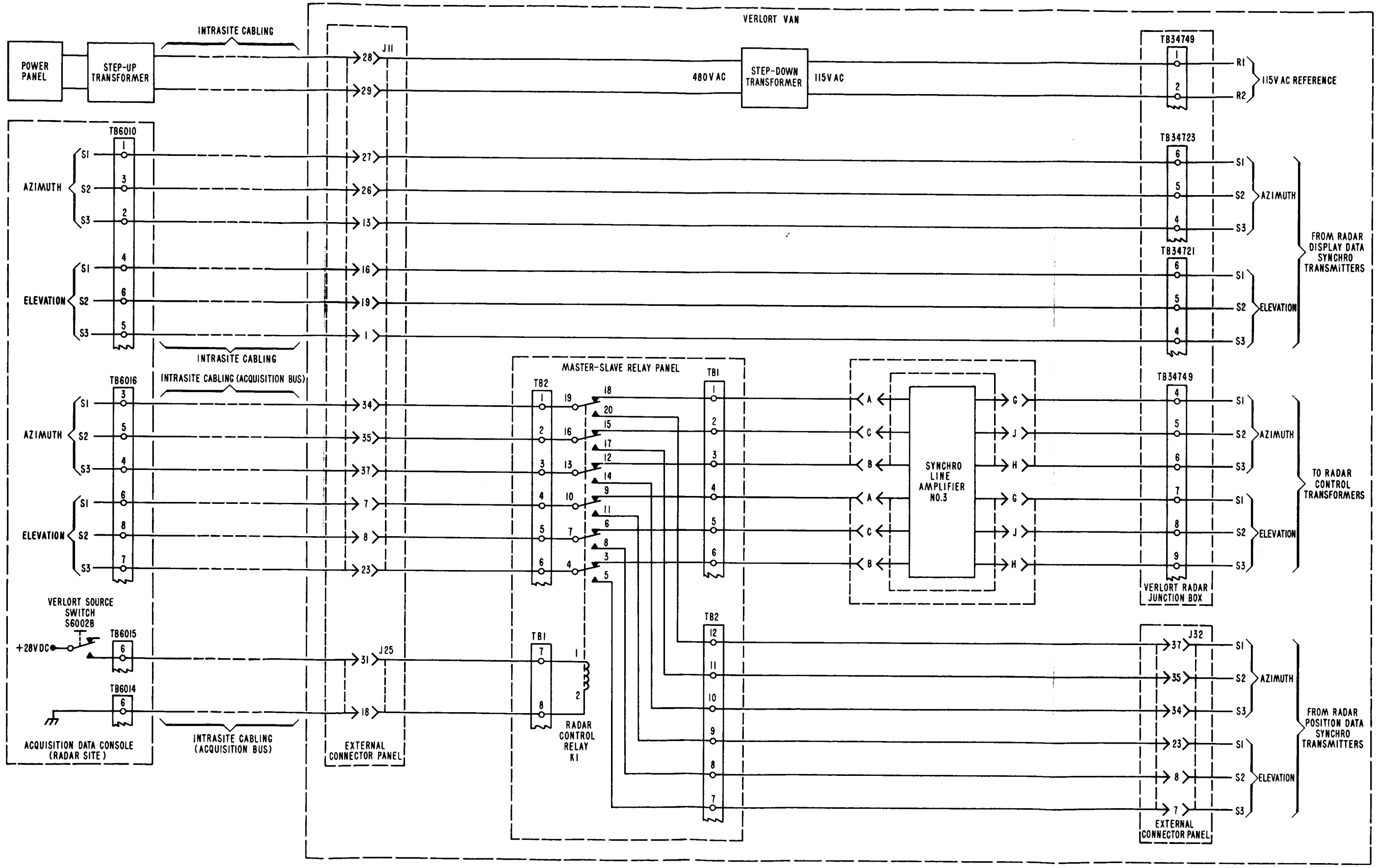

Figure 7-10. Synchro Circuit Connections between Verlort Radar and Radar Site Acquisition Data Console, Schematic Diagram

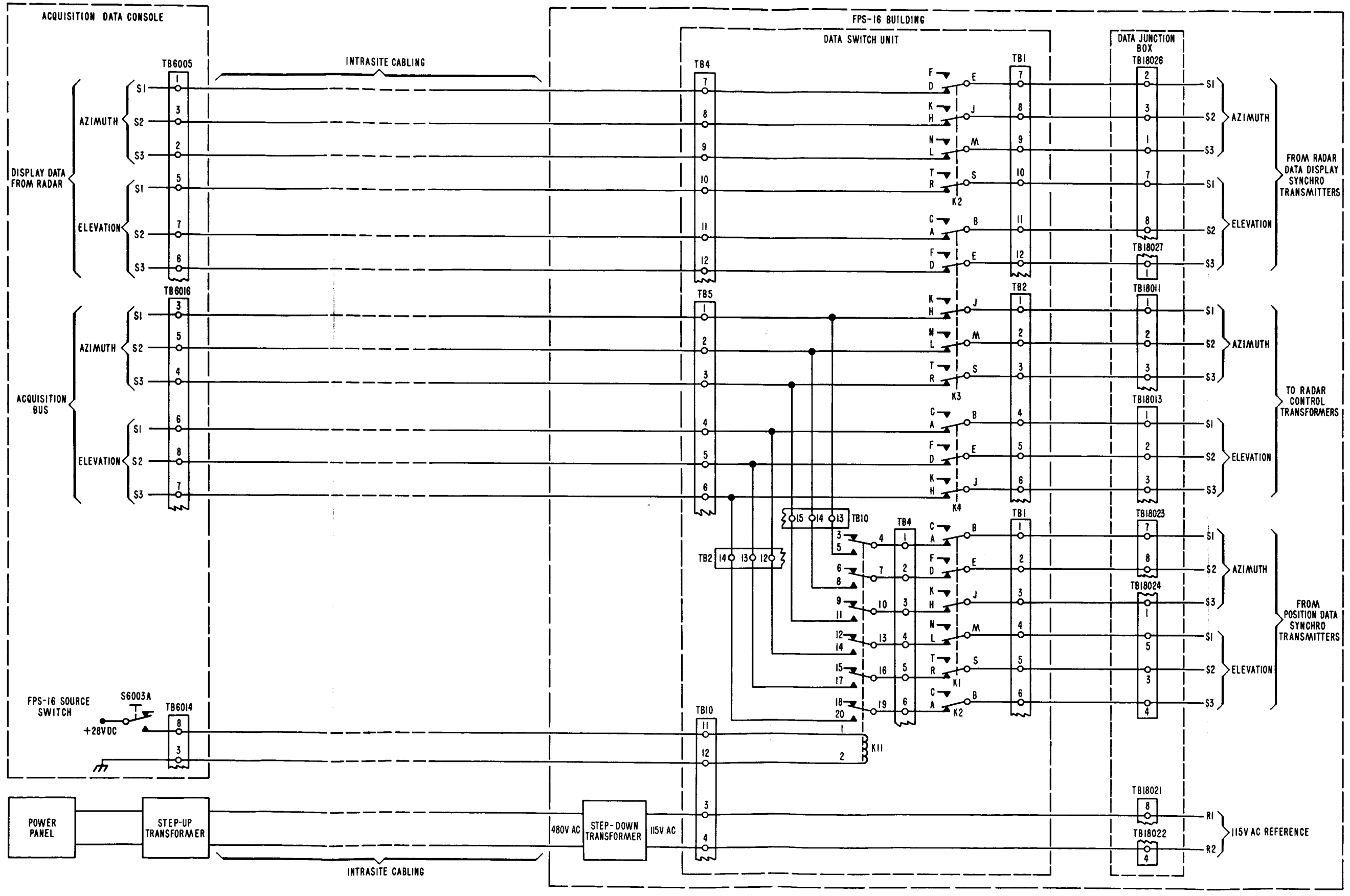

NOTES—
1. RELAYS K1 THROUGH K4 ARE ENERGIZED BY 115V AC FROM RADAR DATA TRANSFER SWITCH. THESE RELAYS ARE ENERGIZED AT ALL TIMES DURING A MERCURY PASS.
2. RELAY K11 IS SHOWN UNENERGIZED. ALL OTHERS ARE SHOWN ENERGIZED.

Figure 7-11. Synchro Circuit Connections between FPS-16 Radar and Radar Site Acquisition Data Console, Schematic Diagram

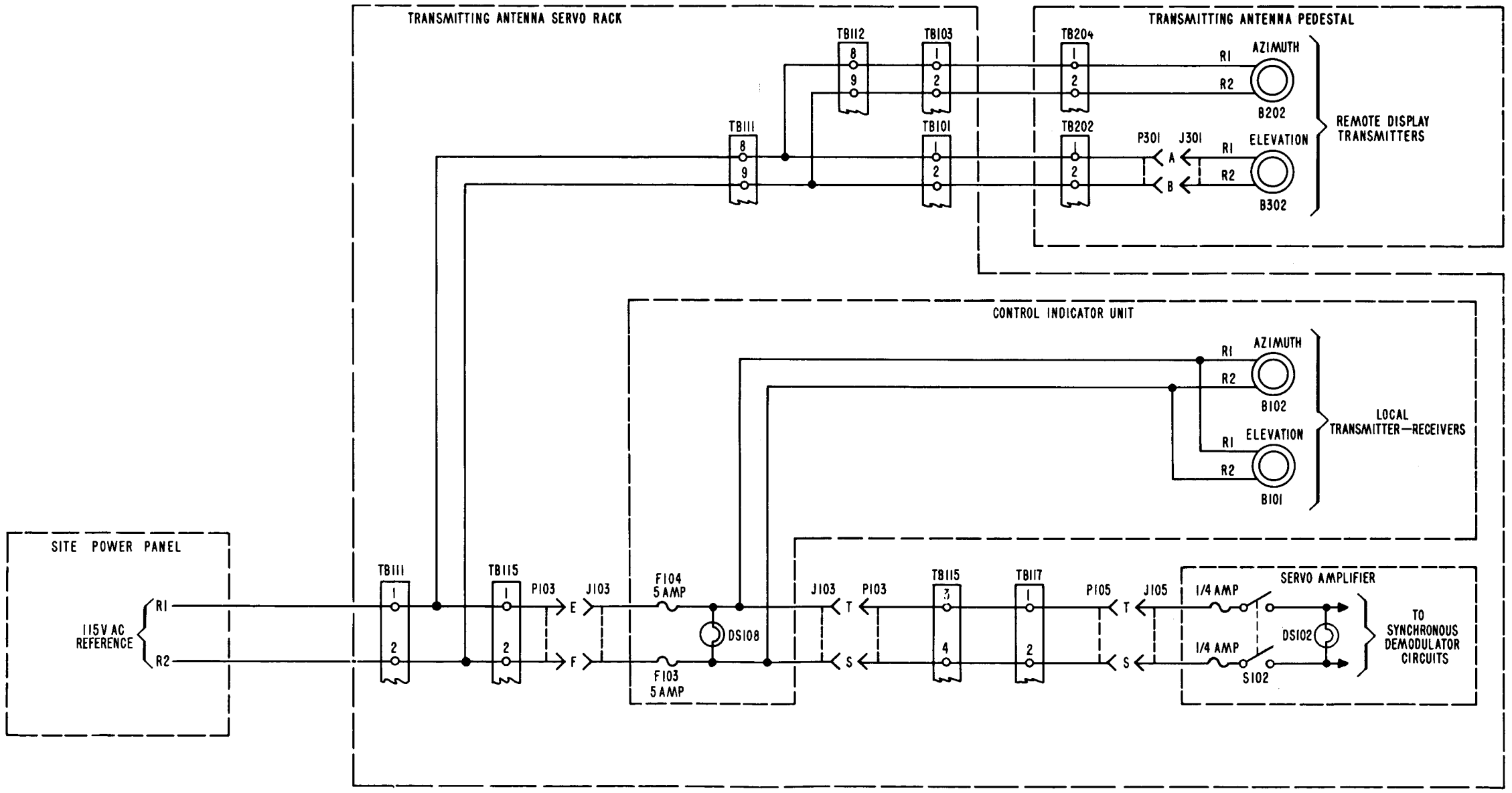

Figure 7-14. Synchro Reference Circuit Connections between Transmitting Antenna and Site Power Panel, Schematic Diagram

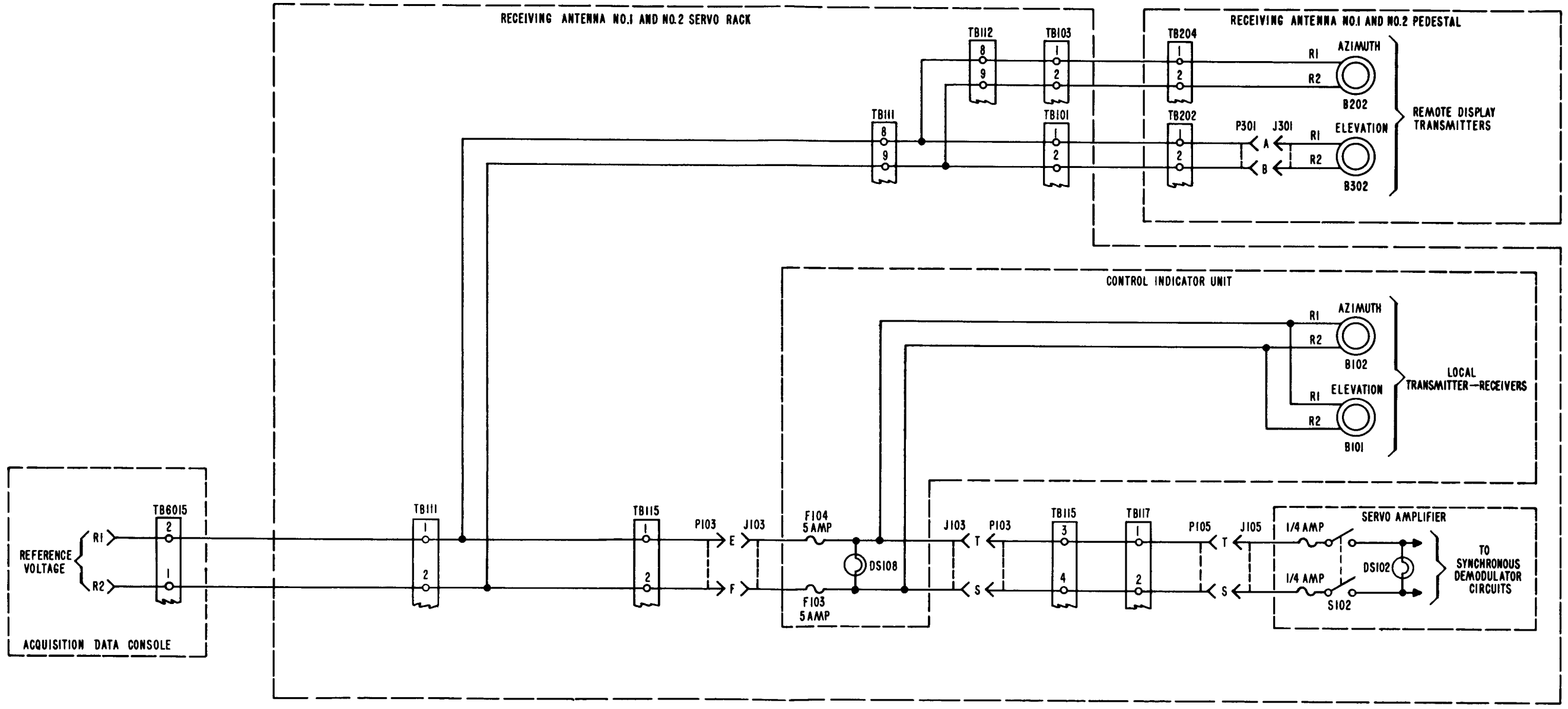

Figure 7-16. Synchro Reference Circuit Connections between Receiving Antennas Nos. 1 and 2 and Receiver Site Acquisition Data Console, Schematic Diagram

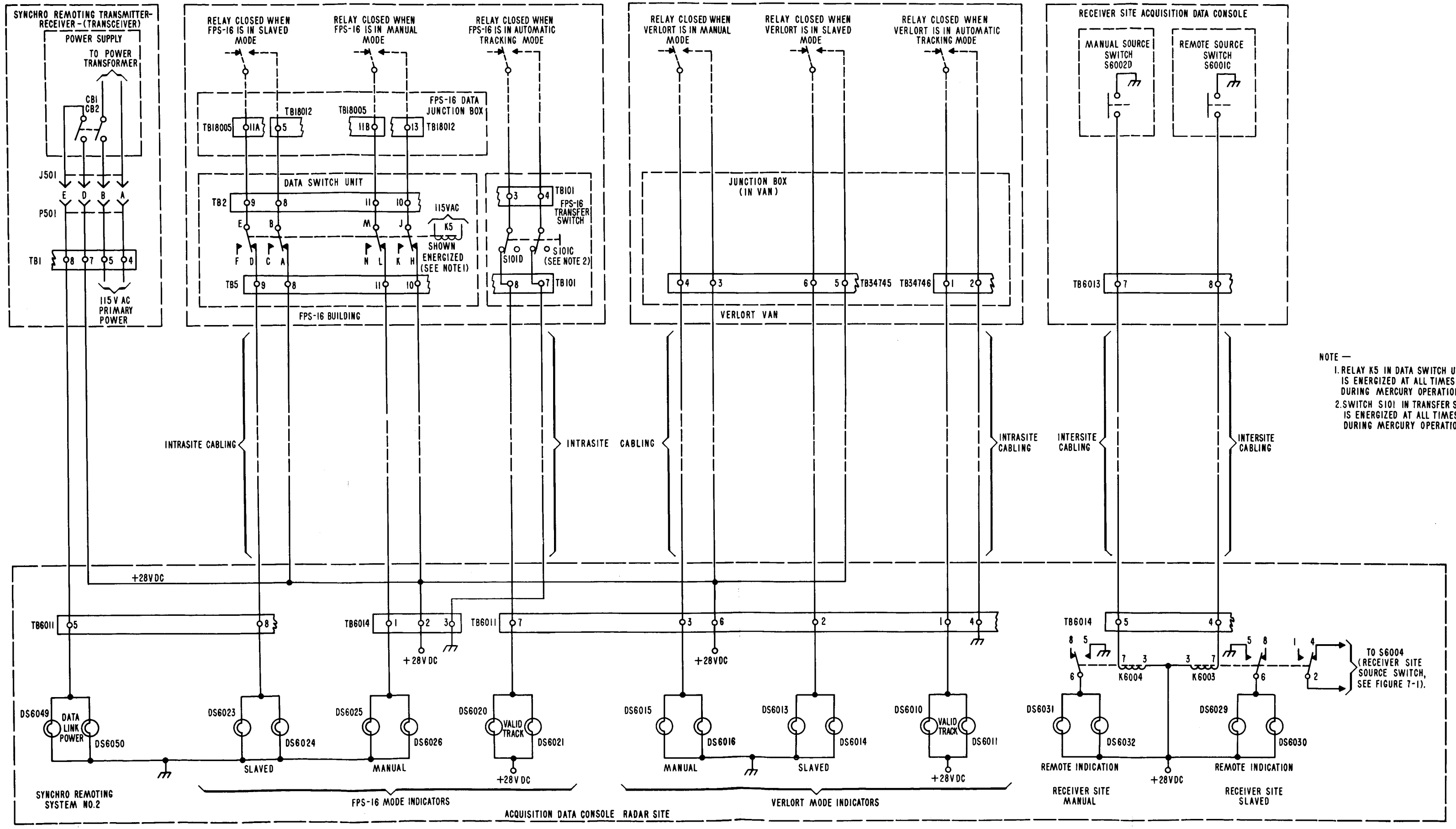

Figure 7-17. D-c Indication Circuits from External Equipment (Except AAA) to Radar Site Acquisition Data Console, Schematic Diagram

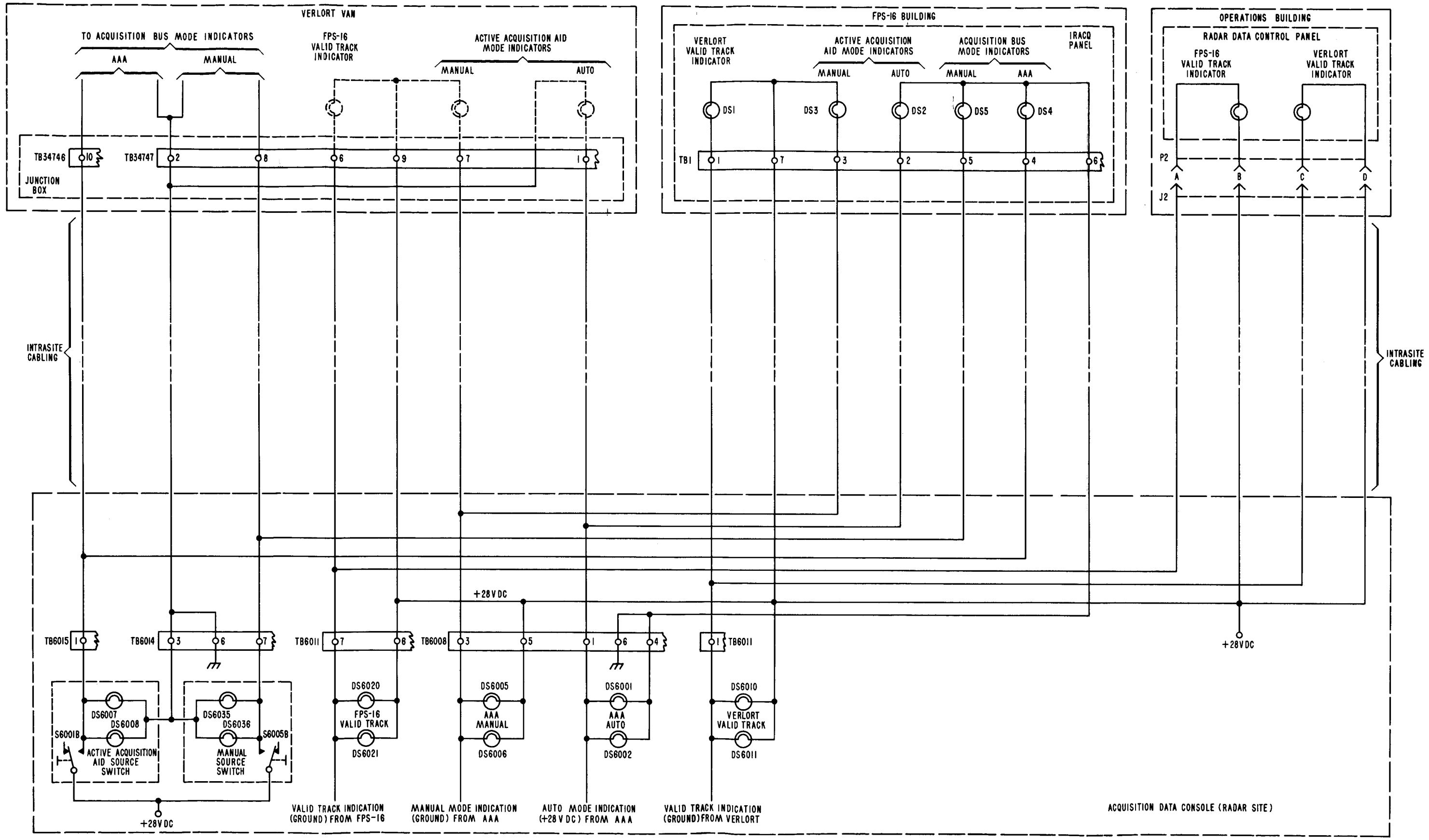

Figure 7-18. D-c Indication Circuits from Radar Site Acquisition Data Console to External Equipment, Schematic Diagram

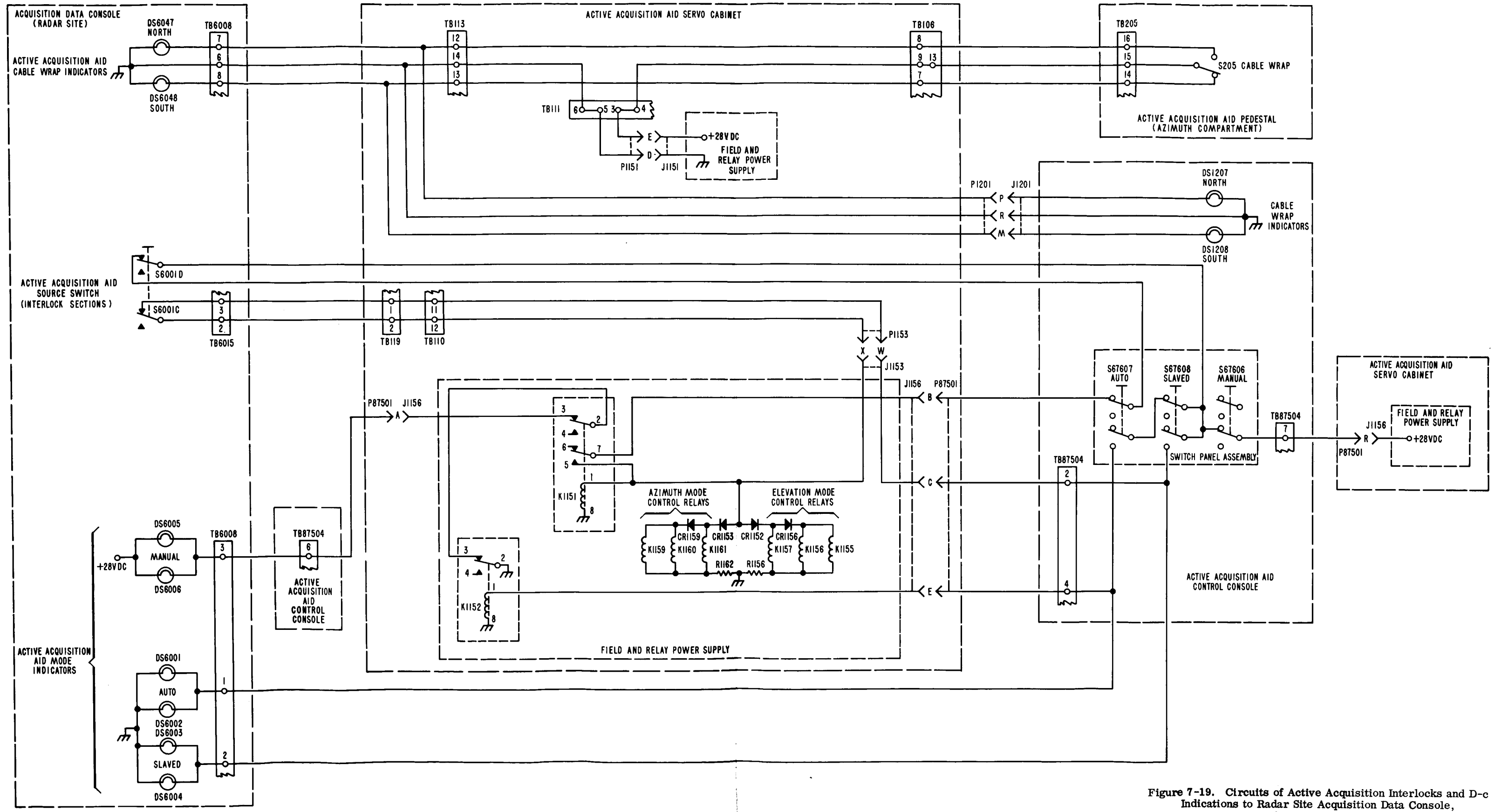

Figure 7-19. Circuits of Active Acquisition Interlocks and D-c Indications to Radar Site Acquisition Data Console, Schematic Diagram

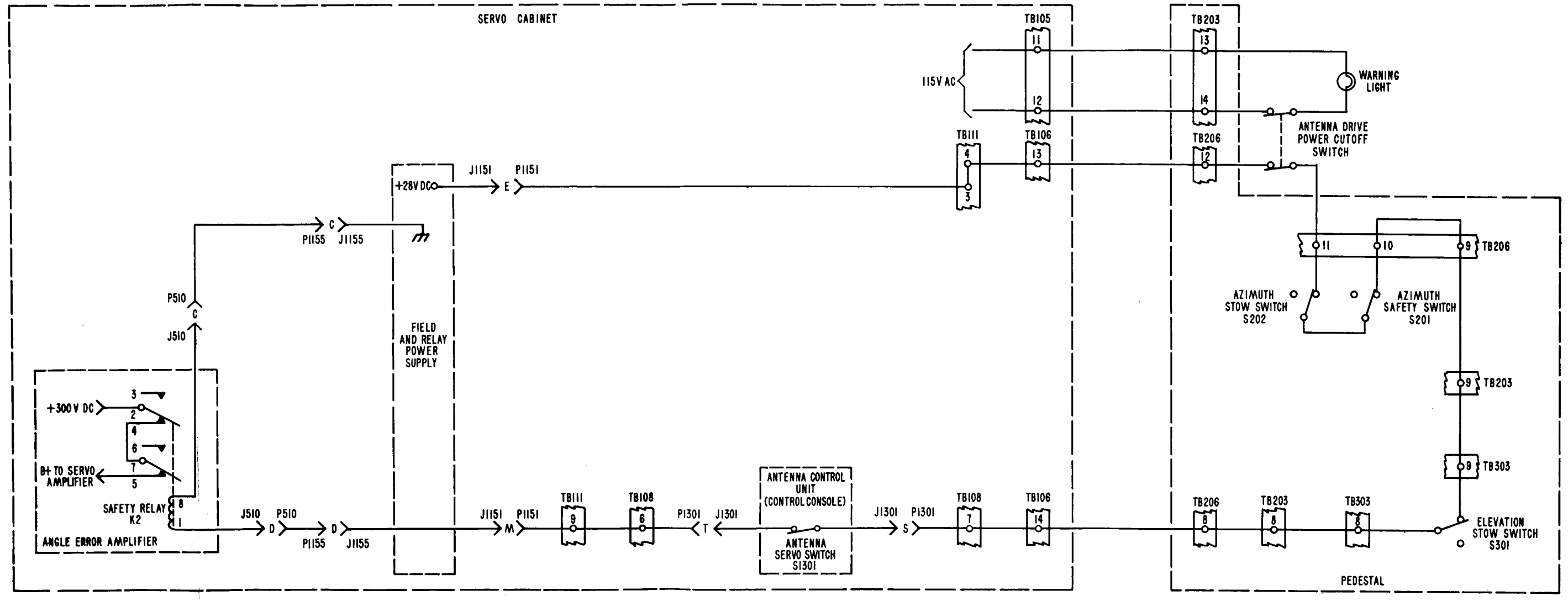

NOTES—

1. ALL SWITCHES SHOWN IN RUN (OPERATING) POSITION.
2. RELAY SHOWN IN ENERGIZED POSITION.
3. ANTENNA DRIVE POWER CUTOFF SWITCH AND WARNING LIGHT (ONE ASSEMBLY) ARE MOUNTED NEAR TOP OF LADDER LEADING TO ANTENNA PLATFORM.

Figure 7-20. Active Acquisition Aid Antenna Safety Circuit, Schematic Diagram

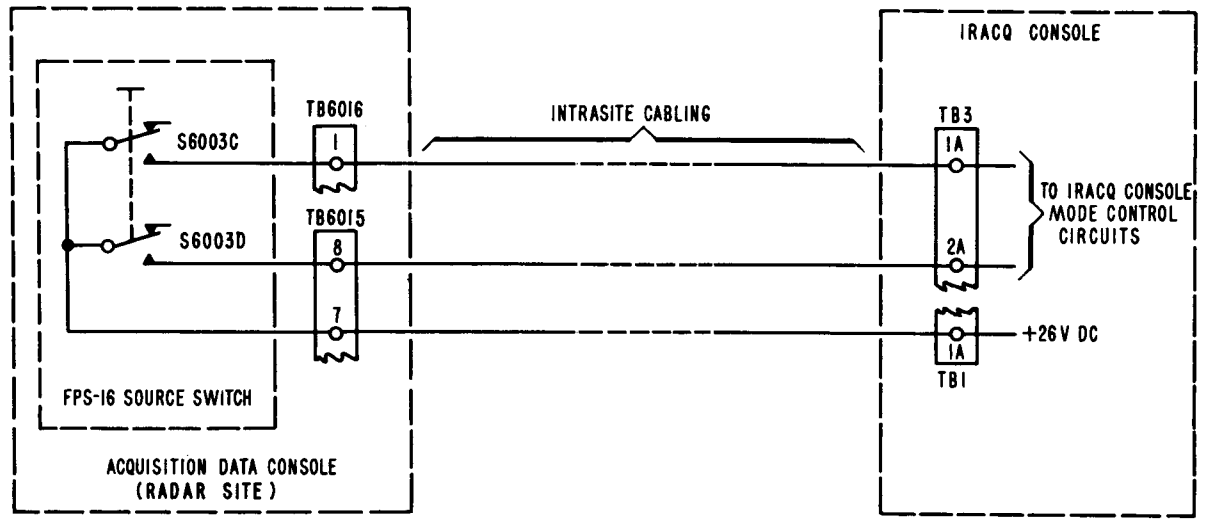

Figure 7-21. FPS-16 Slaving Interlock Circuit, Schematic Diagram

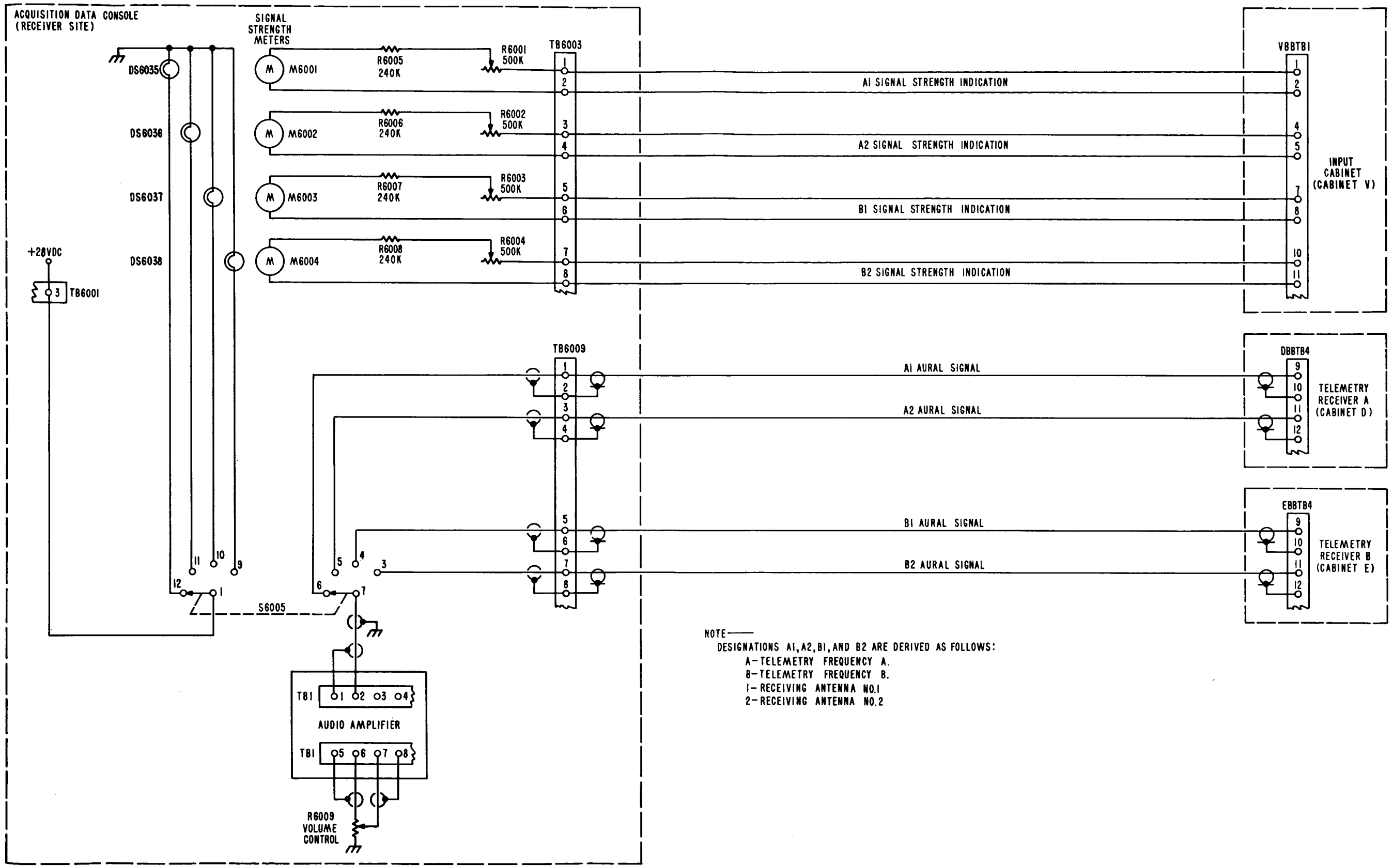

Figure 7-23. Signal Strength Indication and Audio Monitor Circuits, Schematic Diagram