ME 909

project
mercury

CASE FILE COPY

SWITCH UNIT
MERCURY CONTROL CENTER

prepared for
National Aeronautics and Space Administration
Contract No. NAS 1-430

1 october 1960

revised 15 june 1961

International Business Machines Corporation

in association with
WESTERN ELECTRIC COMPANY, INC.

LIST OF EFFECTIVE PAGES

Page No.	Issue	Page No.	Issue
*Title	15 June 1961		
*A	15 June 1961		
i thru iii	Original		
1-1 thru 1-4	Original		
2-1 thru 2-12	Original		
3-1, 3-2	Original		
*3-3	15 June 1961		
4-1, 4-2	Original		
5-1 thru 5-4	Original		
*5-5	15 June 1961		
5-6 thru 5-8	Original		
6-1 thru 6-17	Original		
Appendix A	Original		

* The asterisk indicates pages changed, added or deleted by the current change.

TABLE OF CONTENTS

Heading		Page
CHAPTER 1	INTRODUCTION	1-1
1.1	Purpose of Manual	1-1
1.2	Scope of Manual	1-1
1.3	Purpose of Equipment	1-1
1.4	Description	1-2
1.4.1	Physical Description	1-2
1.4.2	Electrical Description	1-4
CHAPTER 2	THEORY OF OPERATION	2-1
2.1	General	2-1
2.2	Principles of Operation	2-1
2.2.1	Block Diagram Analysis	2-1
2.2.2	Circuit Analysis	2-1
2.2.2.1	Power On/Power Off Circuitry	2-2
2.2.2.2	LH Power Supply	2-3
2.2.2.3	Test Indicator Circuitry	2-7
2.2.2.4	Select A/Select B Register Circuitry	2-7
2.2.2.5	Select IBM 7090/B-GE Circuitry-Plot Board I, II	2-7
2.2.2.6	Select IBM 7090/B-GE Circuitry-Plot Board III	2-11
2.2.2.7	Signal Line I/O Relay Circuit Interconnections	2-11
CHAPTER 3	OPERATION	3-1
3.1	General	3-1
3.2	Location and Function of Controls and Indicators	3-1
3.3	Operating Procedures	3-3
CHAPTER 4	INSTALLATION	4-1
4.1	General	4-1
4.2	Unit Placement	4-1
4.3	Floor Hole Layout	4-1
CHAPTER 5	MAINTENANCE	5-1
5.1	General	5-1
5.2	Component Location	5-1
5.3	Test Procedures	5-1
5.3.1	Power-Off Tests	5-1

TABLE OF CONTENTS (cont'd)

Heading		Page
5.3.2	Power-On Tests	5-3
5.4	Corrective Maintenance	5-8
CHAPTER 6	ILLUSTRATED PARTS BREAKDOWN	6-1
SECTION 1	INTRODUCTION	6-1
1.1	General	6-1
1.2	Purpose and Scope	6-1
SECTION 2	GROUP ASSEMBLY PARTS LIST	6-2
SECTION 3	RELAY CABLE ASSEMBLY	6-15
3.1	General	6-15
3.2	Relay Gate A	6-15
3.3	Relay Gate B	6-16
APPENDIX A	LH POWER SUPPLY, MANUFACTURER'S INSTRUCTION MANUAL	APP A

LIST OF ILLUSTRATIONS

Figure	Title	Page
1-1	Switch Unit, General Switching Configuration	1-2
1-2	Receiving Register, Switch Unit	1-3
1-3	Switch Unit, Front Doors Opened	1-3
2-1	Switch Unit, Overall Switching Configuration, Block Diagram	2-2
2-2	LH Power Supply, Schematic Diagram	2-4
2-3	Switch Unit, Control and Indicator, Wiring Diagram	2-5/2-6
2-4	Switch Unit, Confirm Indicator Circuitry	2-8
2-5	Switch Unit, Signal Relay, Wiring Diagram	2-9/2-10
3-1	Switch Unit, Control and Indicator Panel	3-1
4-1	Switch Unit, Rear View, Door Removed	4-2
4-2	Switch Unit, Base Cutout	4-2
5-1	Switch Unit, Component Locations and Terminal Coding	5-2
6-1	Switch Unit Assembly	6-3/6-4
6-2	Switch Unit, Switch and Indicator Assembly	6-13

LIST OF TABLES

Table	Title	Page
3-1	Switch Unit, Function of Controls and Indicators	3-2
5-1	Control Relay and Indicating Circuitry Test with No Pins of 3K2 Jumpered	5-5
5-2	Control Relay and Indicating Circuitry Test with 3K2 Connector Pins Jumpered	5-5
5-3	Signal Switch Relay, Cable, and Connector Tests, Register Group	5-6
5-4	Signal Switch Relay, Cable, and Connector Tests, Plot Bd I, II Group	5-7
5-5	Signal Switch Relay, Cable, and Connector Tests, Plot Bd III Group	5-7

CHAPTER 1

INTRODUCTION

1.1 PURPOSE OF MANUAL

The purpose of this manual is to provide operating and maintenance personnel with information concerning the theory of operation, operation, installation, and maintenance of the Switch Unit used in the Mercury Control Center at Cape Canaveral.

1.2 SCOPE OF MANUAL

This manual consists of six chapters. Chapter 1 contains the introductory matter and describes the equipment and discusses its purpose. Chapter 2 describes the theory of operation from basic considerations down to detailed circuit analysis. Chapter 3 describes unit operation in terms of its controls and indicators and operating procedures. Chapter 4 covers installation information. Chapter 5 discusses maintenance of the unit, and Chapter 6 lists all the parts which comprise the Switch Unit.

Note

A circuit analysis and a schematic drawing for the commercial d-c power supply are included in Chapter 2. In addition, in the rear of the manual is a copy of the manufacturer's handbook, Appendix A, which includes a general description of the power supply, circuit specifications, circuit description, operating procedures, service and maintenance information, and the electrical parts list for the power supply.

1.3 PURPOSE OF EQUIPMENT

The purpose of the Switch Unit is to provide switching capabilities between one of two sources on 600 data lines (plus 100 spares) and one of three sources on 100 data lines (plus 50 spares). The information to be switched is computer-generated digital data which is transferred in parallel into the Switch Unit, with the output transferred into the Digital Junction Box. Figure 1-1 shows the general switching configuration of the Switch Unit (spares are not shown).

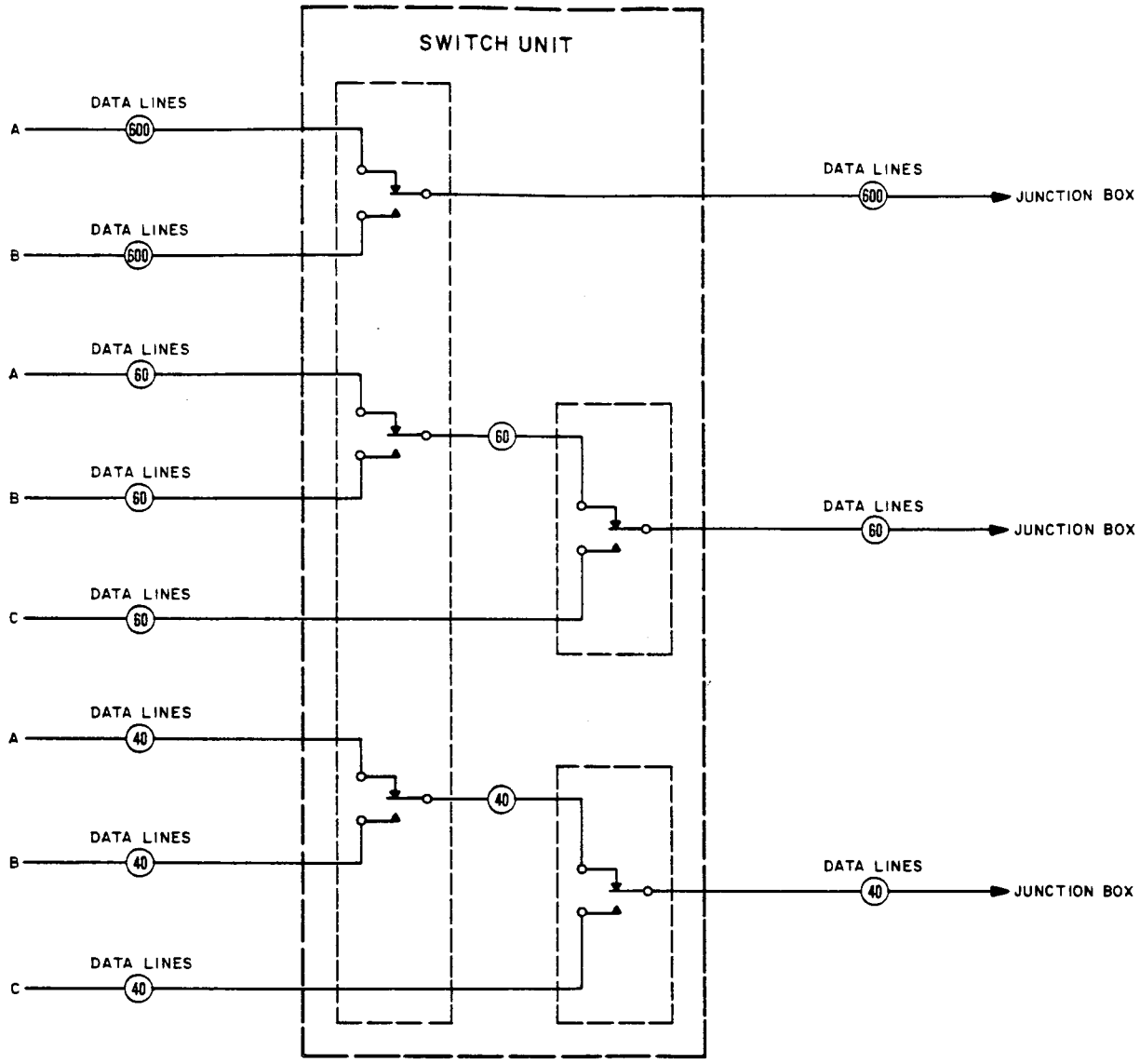

FIGURE 1-1. SWITCH UNIT, GENERAL SWITCHING CONFIGURATION

1.4 DESCRIPTION

1.4.1 Physical Description

The Switch Unit (fig. 1-2) is housed in a steel cabinet approximately 27 inches wide, 74 inches high, 24 inches deep, and which weighs approximately 400 pounds. The controls and indicators for the unit are mounted on the front door panel which can be opened to provide access to the relay gate assemblies and to the commercial power supply.

The gate assemblies can be reached from the relay side or the wiring side either by opening the gate doors or by unlatching the bracket-gate latch attached to the main frame. Figure 1-3 shows a front view of the Switch Unit with the front door, relay gate door, and upper gate assembly opened.

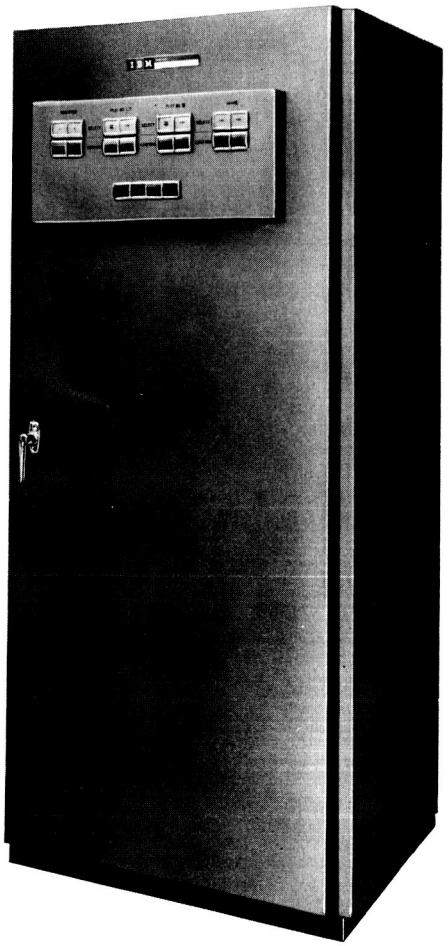

FIGURE 1-2. RECEIVING REGISTER, SWITCH UNIT

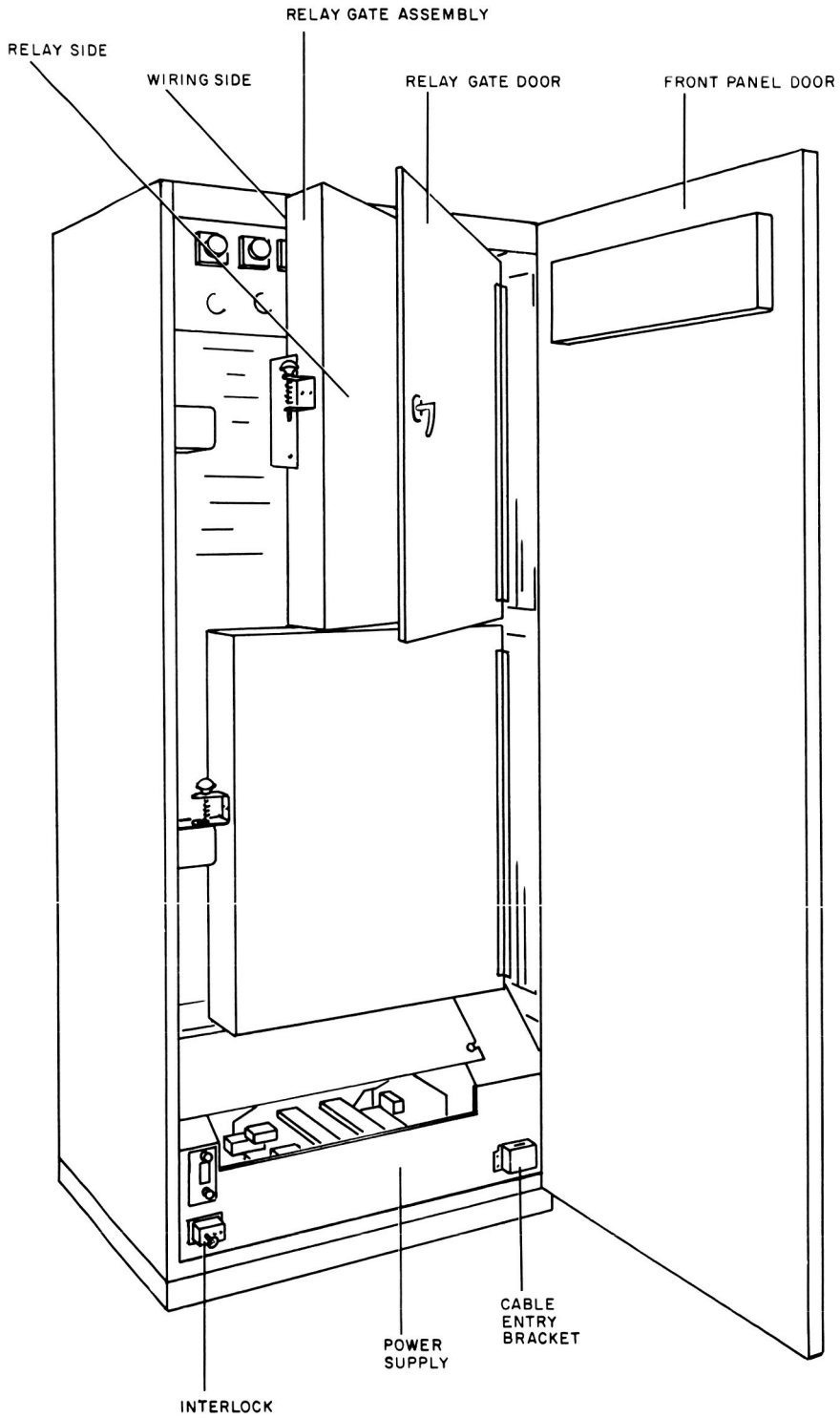

FIGURE 1-3. SWITCH UNIT, FRONT DOORS OPENED

The commercial power supply is housed in the lower portion of the main frame. A bumper interlock switch is provided on the lower left-hand corner of the frame to remove power from the unit whenever the front panel door is opened. All the cable connectors for both input and output (I/O) lines are in the rear of the Switch Unit. These connectors can be reached by opening the rear panel door which is identical with the front panel door, minus the control and indicator panel.

Either the left or the right side of the Switch Unit can be reached by lifting either side panel. These panels are secured by clip-type connectors. However, before the panels can be removed, it is necessary to disconnect the ground straps which are secured to them.

1.4.2 Electrical Description

The Switch Unit is a completely self-contained element which requires only a-c power and I/O connections for operation.

Input power is received through cabling wired to terminal boards within the unit. The power required to operate the unit is single-phase 115vac (±10v) at 60 cycles (±1 cycle). The Switch Unit is rated at 8 amperes, 0.920 kva.

Direct current (dc) for the unit is supplied by a low-voltage - high-current d-c power supply contained within the frame.

CHAPTER 2

THEORY OF OPERATION

2.1 GENERAL

This chapter describes the theory of operation of the Switch Unit. The chapter also includes a block diagram analysis of the overall switching configuration and a detailed analysis of all the circuitry that comprises the unit.

2.2 PRINCIPLES OF OPERATION

2.2.1 Block Diagram Analysis

The block diagram of the overall switching configuration of the Switch Unit is shown in figure 2-1. Seven hundred data lines are received from both the A and B registers, and 100 data lines are received from the B-GE register. The data lines are grouped in cables, each containing 50 separately shielded lines. The cables are connected at the Switch Unit by MS-type connectors which, in turn, are connected through cables within the unit to IBM wire contact relays and returned to output connectors. It may be seen in figure 2-1 that circuit type 1 provides switching capability between the A and B registers on 700 data lines. Circuit type 2 provides switching capability between the registers as follows: A register and B register, A register and B-GE register, or B register and B-GE register, on 100 data lines. Separate selection of portions of the A or B register data lines is not provided for; all A or B register lines (700) are switched at one time. The control circuitry for circuit type 2 provides switching to the B-GE register in two blocks. One selection will switch 40 data lines, and the second selection will switch 60 lines.

All output lines are fed to the Digital Junction Box which contains relay logic and a patch panel which permit rearrangement of the data and/or logical operations to be performed on the data. Several control and indicator wires are fed from the Switch Unit through the Digital Junction Box to the Data Quality Monitor Console.

2.2.2 Circuit Analysis

Analysis of the Switch Unit circuits is divided into a functional analysis of the following circuitry:

Power on/power off

LH power supply

Test indicator

Select A/select B register

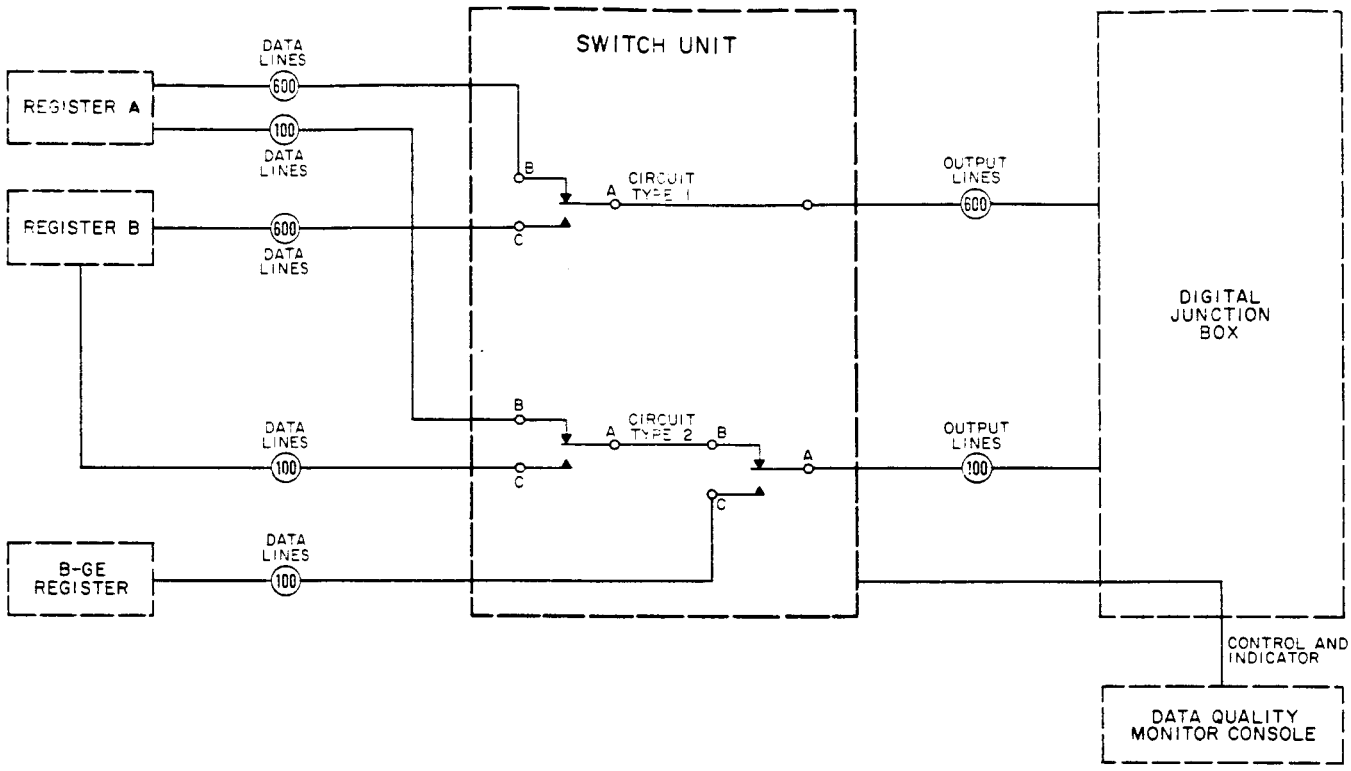

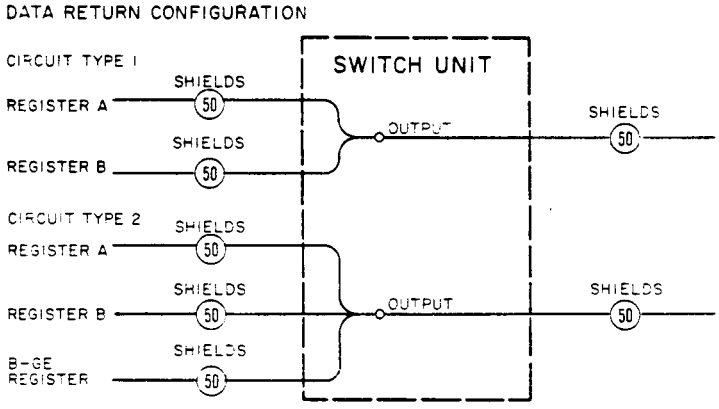

NOTE:
SPARES ARE NOT INCLUDED

FIGURE 2-1. SWITCH UNIT, OVERALL SWITCHING CONFIGURATION, BLOCK DIAGRAM

Select IBM 7090/B-GE circuitry - Plot Board I, II

Select IBM 7090/B-GE circuitry - Plot Board III

Signal line input/output relay circuit interconnections

2.2.2.1 Power On/Power Off Circuitry

The a-c input to the Switch Unit is connected through a circuit breaker (6CB1), a 1-ampere fuse (6F2), and an interlock switch (6S1). When the front door of the unit is closed, the normally open contacts of the INTERLOCK switch are closed, supplying power to a set of normally open contacts on the POWER ON and POWER OFF switches. When the POWER

ON switch is depressed, voltage is supplied to the relay coil (2K1) which energizes the relay and closes all normally open contacts. A parallel path for the a-c voltage is then applied through the normally closed contacts of the POWER OFF switch, through contacts A2 and A1, to the relay coil, thus keeping the relay energized when the POWER ON switch is released. Depressing the POWER OFF switch or opening the INTERLOCK switch will remove this source of power, and the relay will be de-energized, thus turning off all power. Normally open contacts C1, C2 and D1, D2 will provide power to the d-c power supply when the relay is energized.

2.2.2.2 LH Power Supply

The schematic for the LH power supply is shown in figure 2-2. The circuit consists of a full-wave silicon rectifier (CR101 - CR104) and a half-wave silicon rectifier (CR106). The full-wave rectifier supplies voltage to the collectors of the series-pass transistors (Q108, etc.) and to the collectors of the current drivers (Q106, Q104). The half-wave rectifier develops a voltage used as the collector potential of Q102.

Capacitors C101 and C105 provide filtering for the supply. Capacitors C102 and C103 are used as stabilizing capacitors. Capacitor C104 is used as an output capacitor to allow high-peak short-duty cycle pulses to be drawn from the supply without being carried out of the regulation zone.

Transistors Q101 and Q102 act as a balanced differential amplifier. The voltage on the base of Q102 is a portion of the output voltage. This voltage is compared with the voltage on the base of Q101 which is developed by Zener diodes CR107 and CR108 as a reference voltage. The difference signal is fed to the current drive transistors which, in turn, drive the power pass transistors.

Assume that the output voltage tended to decrease. Then the voltage on the base of Q102 would also decrease. This decreasing voltage is compared with the reference voltage of Q101, and a difference signal is developed. This negative-going difference signal is coupled to the base of the current driver (Q105), causing the drivers to conduct more heavily. This, in turn, causes current driver Q107 to increase conduction, thereby causing pass transistor Q114 to increase conduction. The result is an increase of voltage at the load compensating for the original decrease. Transistor Q103, diode CR105, and variable resistor R120 provide fast-acting overcurrent shutdown circuitry. Resistors R101 and R106 are used as filter resistors. Resistors R102, R104, R110, R135, and R133 form a voltage divider for the base potentials of Q104, Q106, and Q108. Resistors R103, R105, R111, R136, and R134 form a voltage divider for the base potentials of Q105, Q107, and Q114. Resistor R117 is used to couple a regenerative feedback signal to the difference amplifier. Potentiometer R120 sets the operation of the overcurrent protection circuitry. Resistor R107 is used as a current-limiting device for the emitter circuitry of the difference amplifier. Resistors R108 and R112 and potentiometers R118 and R119 form a permanent load to set the operating point of the LH power supply.

Fuse F101 is used as a protection device in the a-c line. Circuit breaker CB101 is used as a protection device for the d-c line of the power supply. Blower motor B101 is used to keep the ambient temperature within specified limits. Indicator I101 is used to indicate the on-condition of the power supply. Power transformers T101, T102, and T105 are used to establish the voltage necessary to operate the power supply.

As an aid in understanding the following circuit analysis, refer to figure 2-3.

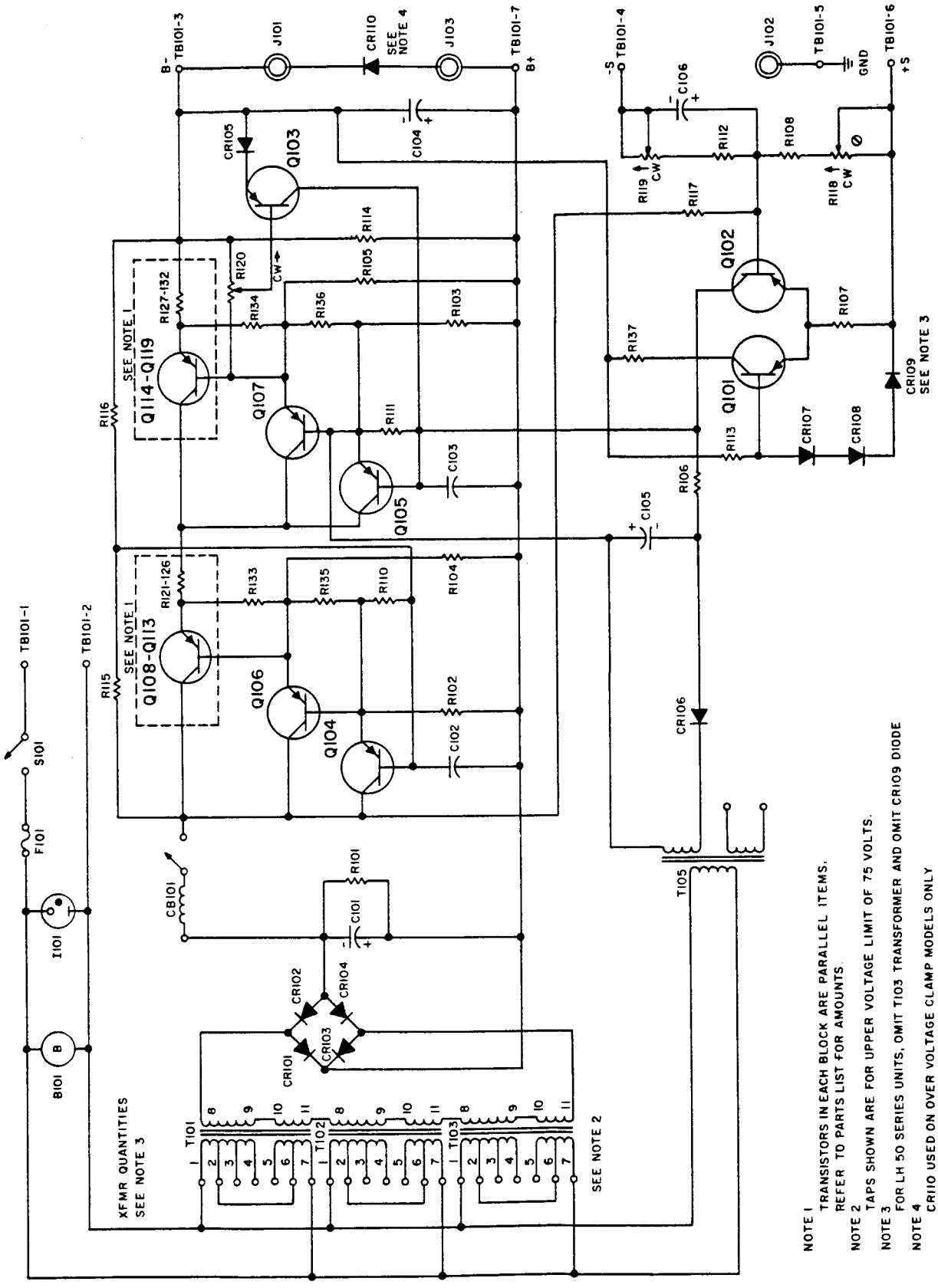

FIGURE 2-2. LH POWER SUPPLY, SCHEMATIC DIAGRAM

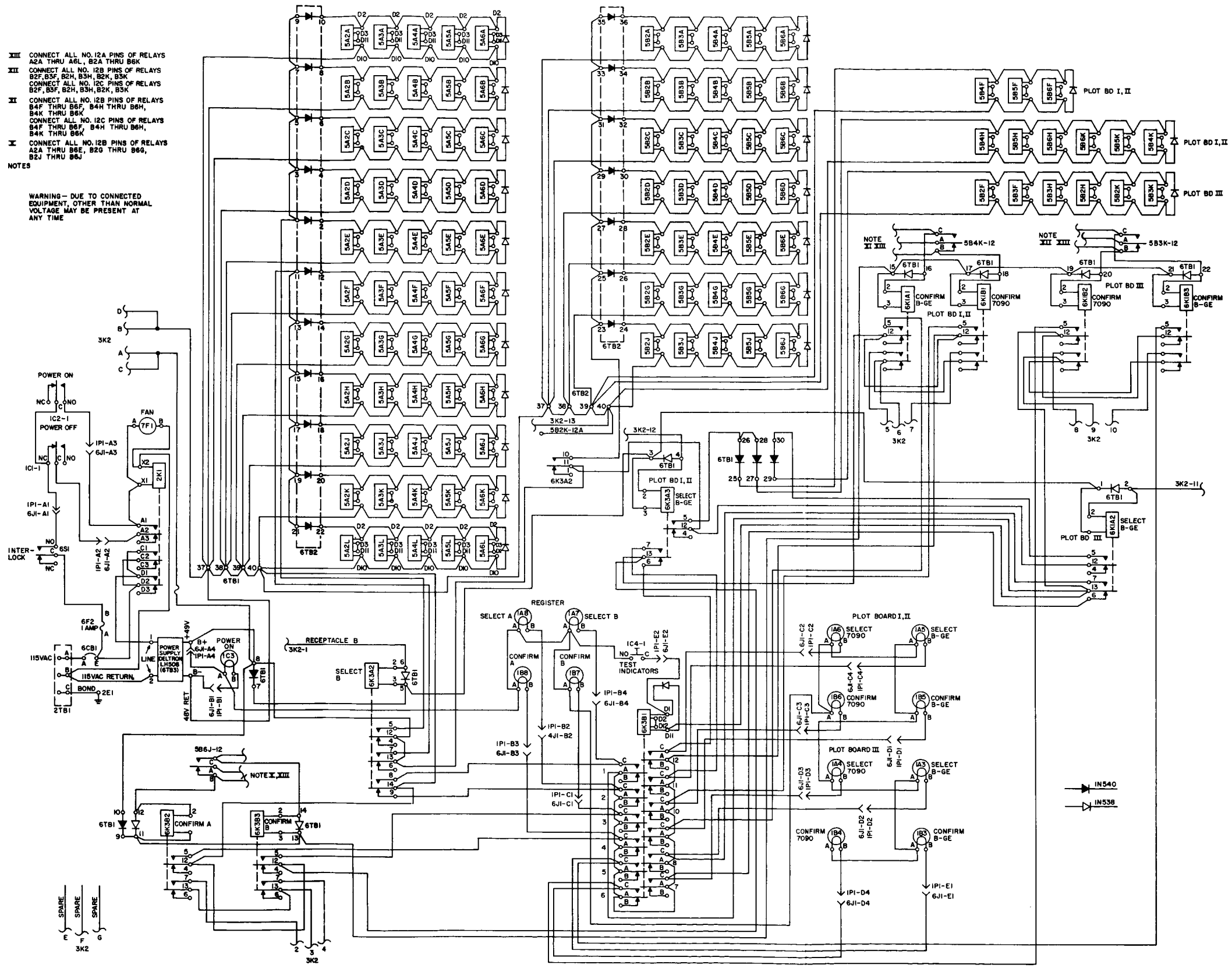

FIGURE 2-3. SWITCH UNIT, CONTROL AND INDICATOR, WIRING DIAGRAM

2.2.2.3 Test Indicator Circuitry

The test indicator circuitry is activated by depressing the TEST INDICATOR switch on the Switch Unit control and indicator panel. Depressing this switch will supply 48v to the test indicator relay (6K3B1) coil. This causes the normally open contacts on the relay to close, thereby completing the d-c return through all indicator lights and causing the lamps to light.

2.2.2.4 Select A/Select B Register Circuitry

This circuitry is controlled by the SELECT A/SELECT B REGISTER switch on the Data Quality Monitor. When this switch is in the SELECT A REGISTER position, the ground return to Switch Unit relay 6K3A2 is open. Therefore, relay contacts 5, 7, and 10 do not receive the voltage (48v) required to energize the signal relay coils associated with registers A and B. The normally closed contacts on the signal relays are the input connections from the A register. When the selection switch on the Data Quality Monitor is in the SELECT B REGISTER position, the 48v return line is grounded and relay 6K3A2 is energized, supplying voltage to contact pins 5, 7, and 10. This voltage is then distributed to energize the signal relays, thus switching the input data lines from the A register to the B register.

The Confirm A, Confirm B circuitry (fig. 2-4) is controlled by relays 6K3B2 and 6K3B3, respectively. When the selection switch on the Data Quality Monitor is in the SELECT A REGISTER position, none of the signal relays are energized. The 12th set of contacts on all signal relays is used in the Confirm indicator circuitry with the A contacts connected to ground. The normally closed contacts (A and B contacts) of these relays are connected in parallel and then are connected in series with the coil of relay 6K3B2. This provides a ground return that energizes the relay which supplies a ground return through contacts 5 and 12 for the Confirm A indicator and simultaneously closes contacts 7 and 13 to complete the Confirm A indicator circuit in the Data Quality Monitor.

When the B Register is selected, contacts A/B of the signal relay are opened, deselecting the Confirm A relay (6K3B2) and selecting the Confirm B relay (6K3B3). Contacts 3, 12, 7, and 13 are closed, completing ground returns for the Confirm B indicators in the Switch Unit and in the Data Quality Monitor.

Referring to figure 2-4, it may be seen that all No. 12 position contacts in a particular signal relay circuit group are wired in parallel. When contacts B and A are closed, the ground path for the Confirm A control relay is completed, closing the normally open contacts which complete the ground returns for the Confirm A indicators. When the signal relays are activated by the selection of the B register data source, contacts B and A are opened, deselecting the Confirm A control relay, and contacts A and C are closed, completing the ground return to the Confirm B control relay coil. The normally open contacts are closed, completing the ground return for the Confirm B indicators. Unless all the signal relays are selected, ground returns for both the A and B indicator control relays will be completed, causing both the A and B indicators to be turned on. This indicates that proper switching has not been performed and that corrective action is required. All of the Confirm circuits work in a similar manner.

2.2.2.5 Select IBM 7090/B-GE Circuitry - Plot Board I, II

The Select 7090/B-GE circuitry controls switching on 60 data lines from the A or B register to the B-GE register. In addition, 30 spare relay circuits within the Switch Unit are activated. Signal relays 5B4F to 5B6F and 5B4K to 5B6K are active, switching 10

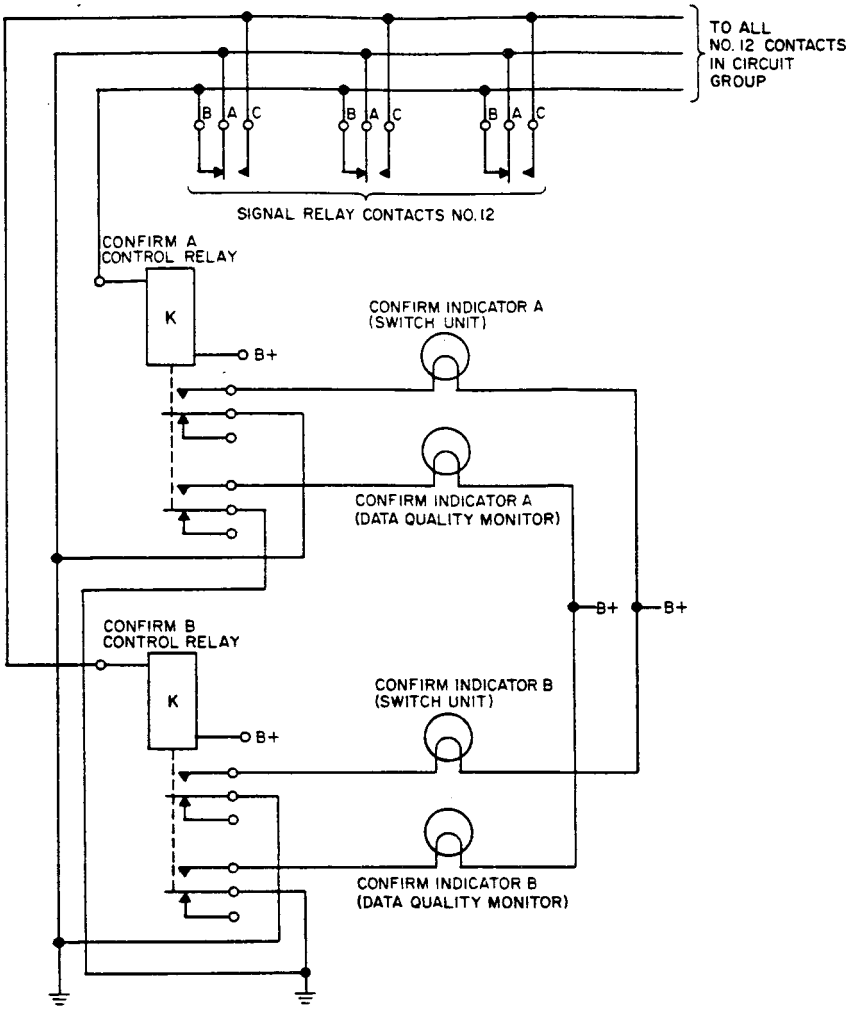

FIGURE 2-4. SWITCH UNIT, CONFIRM INDICATOR CIRCUITRY

data lines each. Relays 5B4H to 5B6H are the spare circuits which provide switching when the MS-type connectors feeding these relays are connected by the cables feeding either 5B4F to 5B6F or 5B4K to 5B6K. The cables associated with the respective signal lines from the A and B registers must be reconnected to feed relays 5B4E to 5B6E or 5B4J to 5B6J. The connectors which feed these relays are shown in figure 2-5.

When selection of the 7090 Register/Plot Board I, II in the Data Quality Monitor is made, no voltage is applied to relay 6K3A3 and contact positions 6 and 13 are closed, completing the ground return which lights the Select 7090 indicator. The Confirm 7090 indicator on the Switch Unit is lit by completion of the ground return through contacts 5 and 12 of Confirm 7090 relay 6K1B1, which is energized by normally closed signal relay contacts 12/AB. This relay also activates the Confirm 7090 indicator on the Data Quality Monitor through the closing of contacts 7 and 13.

When the Data Quality Monitor Selection switch is set to the B-GE position, the ground return to relay coil 6K3A3 is completed, activating the relay. Contacts 6 and 13 are opened, and the Select 7090 indicator goes off. At the same time, voltage is applied to the signal relay coils by the closing of contacts 5 and 12. Activating the signal relays

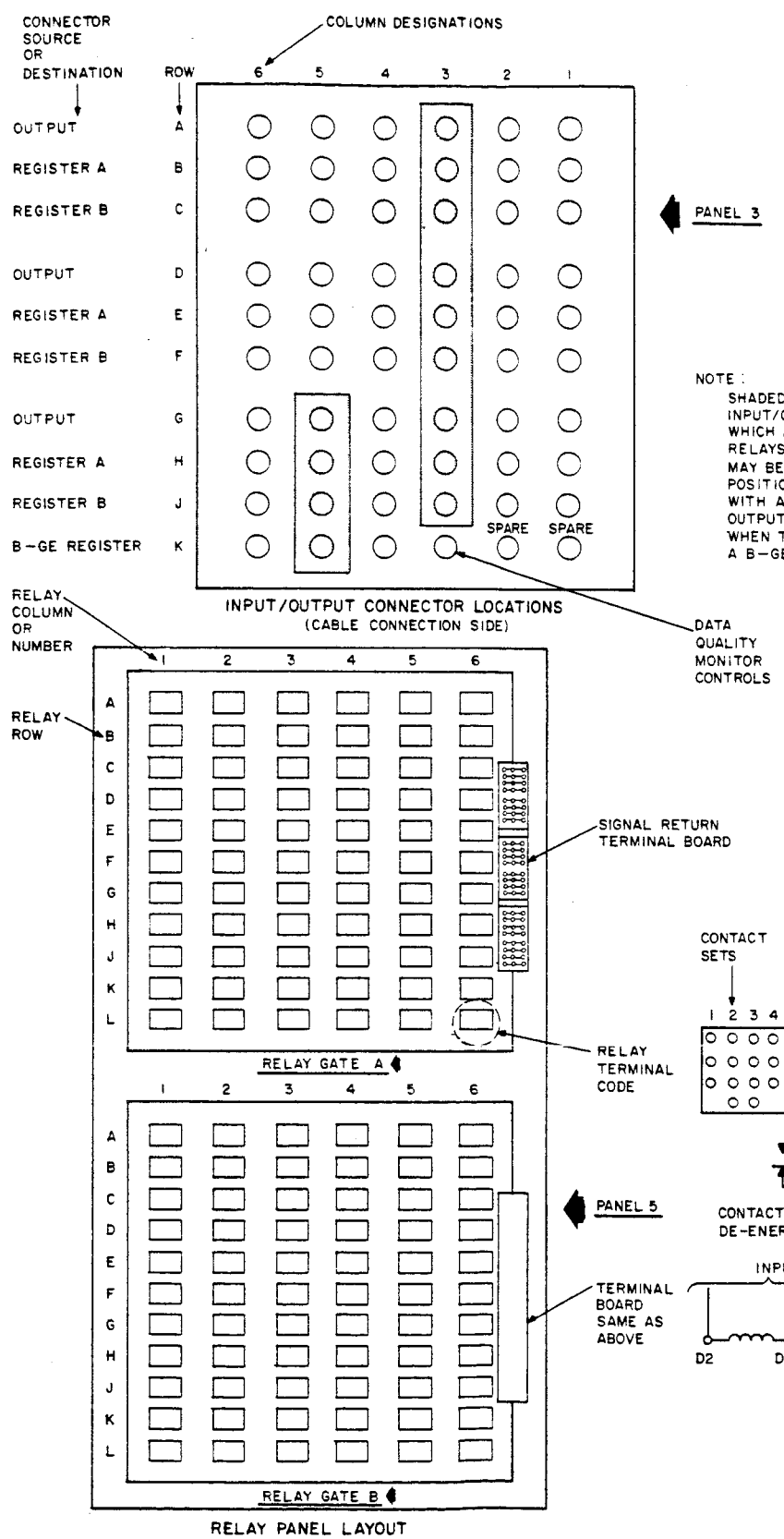

NOTE:
SHADED AREAS INDICATE SPARE INPUT/OUTPUT CONNECTORS WHICH ARE CONNECTED TO RELAYS. INPUT/OUTPUT CABLES MAY BE MOVED TO SPARE POSITIONS IN SETS OF THREE WITH A & B REGISTER INPUT/OUTPUT CONFIGURATION OR 4 WHEN THE INPUTS INCLUDE A B-GE REGISTER

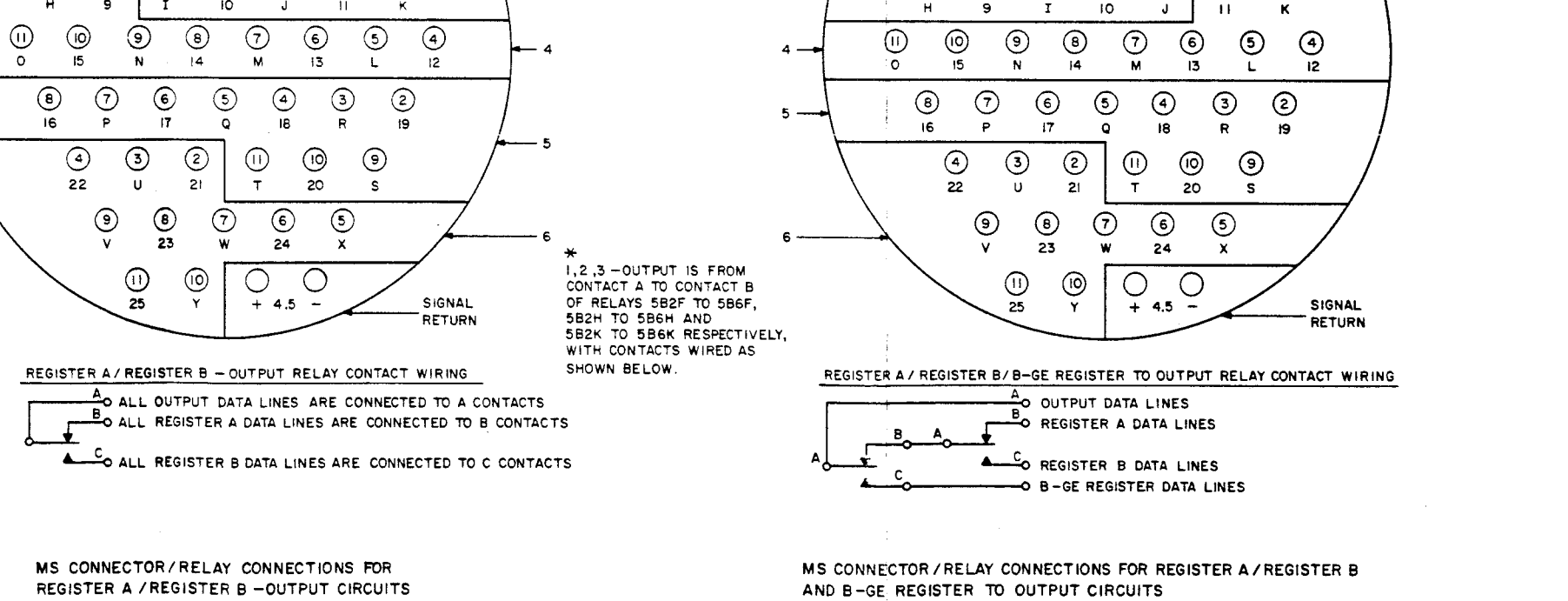

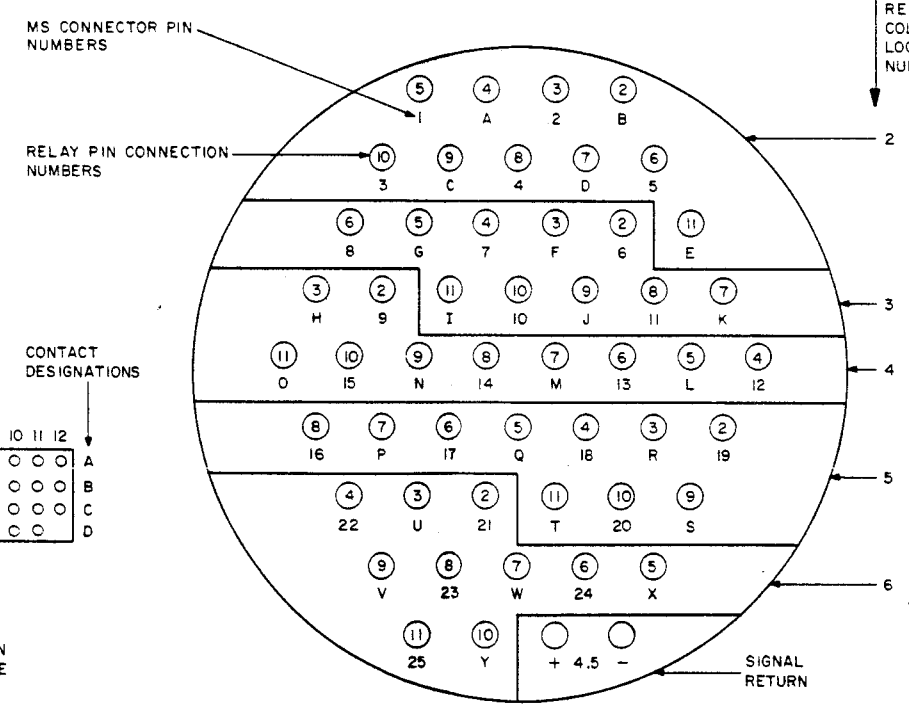

MS CONNECTOR/RELAY CONNECTIONS FOR REGISTER A/REGISTER B -OUTPUT CIRCUITS

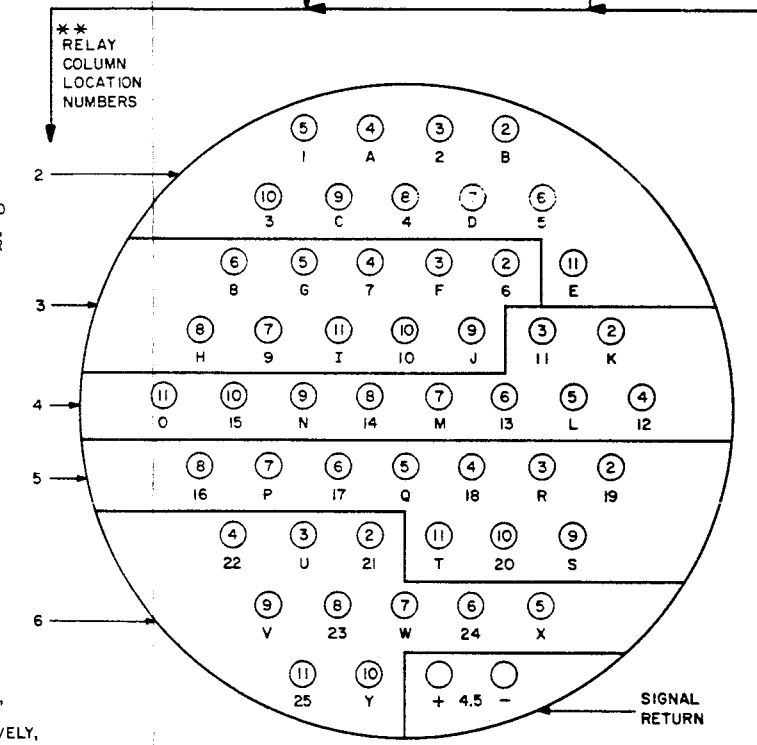

MS CONNECTOR/RELAY CONNECTIONS FOR REGISTER A/REGISTER B AND B-GE REGISTER TO OUTPUT CIRCUITS

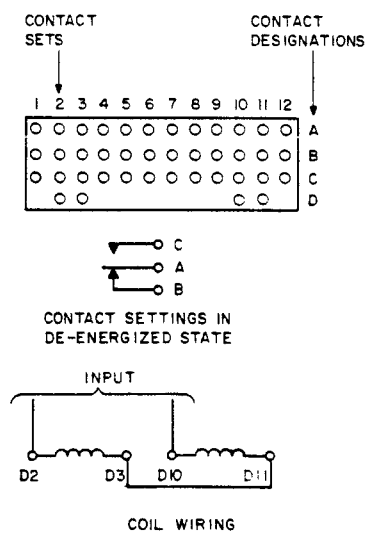

FIGURE 2-5. SWITCH UNIT, SIGNAL RELAY, WIRING DIAGRAM

switches all data lines from the A or B register to the B-GE register by opening all A/B contacts and closing all A/C contacts. Where opened, the 12th set of A/B contacts deselects Confirm 7090 relay 6K1B1, opening contacts 5, 12, 7, and 13. This action opens the ground return to the Confirm 7090 indicators in the Switch Unit and the Data Quality Monitor, causing these indicators to go off. Upon selection of the signal relays, the 12th set of A/C contacts closes, which completes the ground return for Confirm B-GE relay 6K1A1. Activating relay 6K1A1 closes contacts 5, 12, 7, and 13, which completes the circuits lighting the Confirm B-GE indicators in the Switch Unit and in the Data Quality Monitor.

2.2.2.6 Select IBM 7090/B-GE Circuitry - Plot Board III

The Select 7090/B-GE circuitry controls switching on 40 data lines from the A or B register to the B-GE register. In addition, 20 spare relay circuits within the Switch Unit are activated. Signal relays 5B2F, 5B3F, 5B2K, and 5B3K are active, switching 10 data lines each. Relays 5B2H and 5B3H are spare circuits which will provide switching only if the Amphenol connectors feeding them are connected by the cables feeding either 5B2F and 5B3F or 5B2K and 5B3K. It will also be necessary to reconnect cables from the A and B registers which feed relays 5B2E and 5B3E or 5B2J and 5B3J. The cable connectors feeding these relays are shown in figure 2-5.

When the Data Quality Monitor is set to the SELECT 7090 position, relay 6K1A2 is deactivated, completing the Select 7090 indicator circuit through contacts 6 and 13. The Confirm 7090 indicator circuit is completed through contacts 5 and 12 of relay 6K1B2, which is energized by normally closed signal relay contacts 12/AB. This relay also activates the Confirm 7090 indicator on the Data Quality Monitor through the closing of contacts 7 and 13.

When the Data Quality Monitor selection switch is set to the B-GE position, the ground return to relay coil 6K1A2 is completed, activating the relay. This activation deselects the Select 7090 indicator on the Switch Unit by opening contacts 6 and 13. In addition, voltage is applied to the signal relay coils through the closing of contacts 5 and 12. When the signal relays are activated, the signal lines are switched and the 12/AB contacts are opened, deselecting Confirm 7090 relay 6K1B2. This causes contacts 5, 12, 7, and 13 to open, deselecting the Confirm 7090 indicators on the Switch Unit and on the Data Quality Monitor. Selection of the signal relays also closes contacts 12 A/C, which completes the ground return for Confirm B-GE relay 6K1B3. Activating 6K1B3 closes contacts 5, 12, 7, and 13, lighting the Confirm B-GE indicators in the Switch Unit and in the Data Quality Monitor.

2.2.2.7 Signal Line I/O Relay Circuit Interconnections

There are approximately 2700 interconnections between the signal relays and the I/O connectors in the Switch Unit. These connections are illustrated in figure 2-5. The diagram shows the location designation for all connectors located in Panel 3 of the switch unit; e.g., the designation for the connector in the upper left corner of Panel 3 would be 3A6 (Panel 3, Row A, Column 6). An illustration of Panel 5, which contains relay gates A and B, is also shown. The relays are laid out with numeric columns 1 through 6 and rows A through L (I is not used). The designation for the upper right-hand relay in the top gate would be 5A6A (Panel 5, Relay Gate A, Column 6, Row A). The wiring terminal code for the relay connector blocks is also shown. The numbers across the top of the terminal block are those for 12 sets of contacts located within each relay; rows A to C are the contact designations. The contact configuration is shown below the terminal block; contacts

A/B are normally closed. (The terminals in row D of the block connect to the coil.) Contact set No. 1 is not used; sets 2 through 11 are used for signal switching; contact set 12 is used for the Confirm circuitry previously explained.

The upper right-hand portion of figure 2-5 shows a data chart. This chart lists, by location, signal cable connectors and the signal relays to which they are interconnected. Below the chart are shown two connector pin layouts as viewed from the cable connection side. Two sets of numbers are shown for each pin location in the connector. The number below the pin is the pin designation; the number within each pin (circle) is the number for the set of contacts in the relay which will be connected by the configuration for the register A/register B I/O switching. The connector on the right shows the connector pin/relay contact configuration for the register A/register B/B-GE register I/O switching. The standard relay contact connections are shown in the illustration for the two I/O configurations.

To illustrate the use of the chart, assume a need to check the wiring from pin A of connector 3A1. It may be seen from the chart that connector 3A1 is an output connector and the relay which connects it is 5A-A. The blank designation is determined by locating the appropriate pin in the connector below the chart. In this case, the pin is A and the corresponding relay pin is 4. Pin A is shown to be one of 10 pins which connect to relay column location 2 (relay 2). Therefore, the corresponding relay pin designation for 3A1A is 5A2A4A (Panel 5, Gate A, Relay Column 2, Row A, Contact set 4, Contact A). (All output lines connect to A contacts.) This chart may be used in the same manner to develop all other connector/relay connections.

CHAPTER 3

OPERATION

3.1 GENERAL

Operation of the Switch Unit is controlled by switches on the Data Quality Monitor. These switches, when operated, energize control relays in the Switch Unit. The status of the selections is shown by indicators in both the Data Quality Monitor and in the Switch Unit.

3.2 LOCATION AND FUNCTION OF CONTROLS AND INDICATORS

Figure 3-1 is a drawing of the Switch Unit control and indicator panel. Table 3-1 lists all the controls and indicators and contains a brief description of their functions.

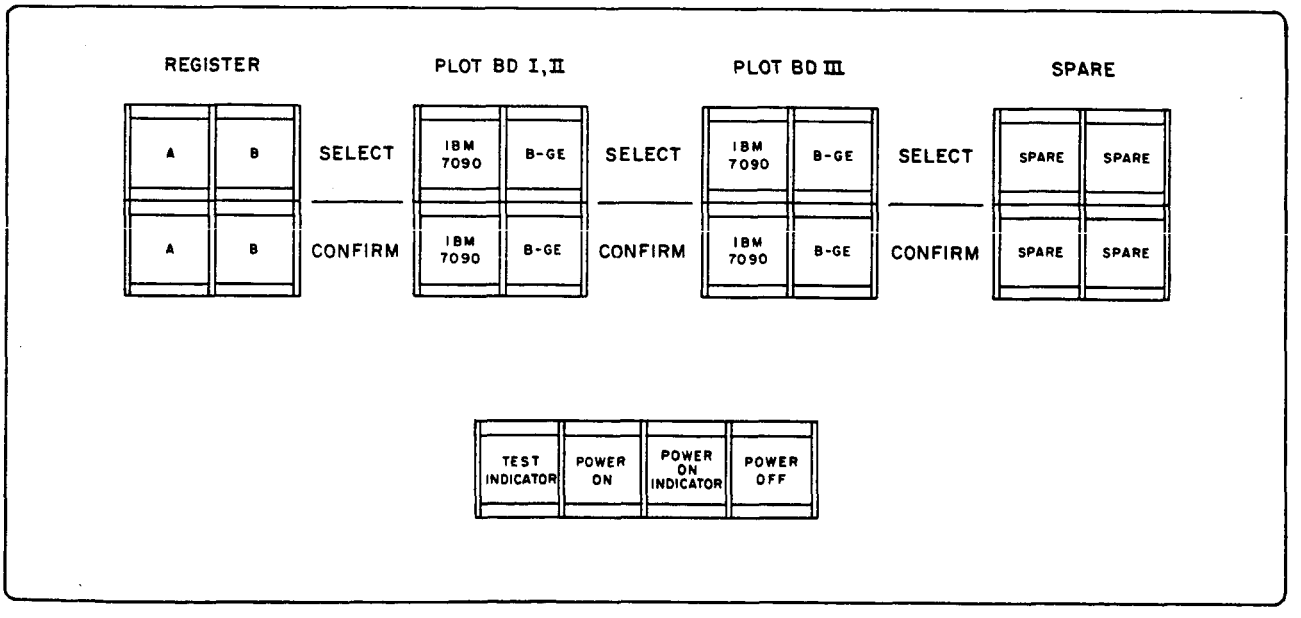

FIGURE 3-1. SWITCH UNIT, CONTROL AND INDICATOR PANEL

TABLE 3-1. SWITCH UNIT, FUNCTION OF CONTROLS AND INDICATORS

Component Designation	Function
Controls	
POWER ON	Supplies ac to the 48vdc power supply.
POWER OFF	Removes ac from the 48vdc power supply.
TEST INDICATOR	Lights all indicators when depressed.
Indicators	
REGISTER A SELECT	Indicates register A inputs have been selected at the Data Quality Monitor.
REGISTER A CONFIRM	Indicates that relays controlling A register inputs are in the normally closed position and that proper selection has been made. Note Only one Confirm light for any one circuit group should be lit at any one time or a malfunction exists.
REGISTER B SELECT	Indicates that register B inputs have been selected at the Data Quality Monitor.
REGISTER B CONFIRM	Indicates that signal relays controlling B register inputs have been picked.
PLOT BD I, II/IBM 7090 Select	Indicates that selection of the IBM 7090 has been made at the Data Quality Monitor. The source of data is the A or B register, depending upon selection, but data cannot be received from the B-GE register.
PLOT BD I, II/IBM 7090 CONFIRM	Indicates that proper selection of the signal relays for the IBM 7090 has been made, if the Plot Board I, II/B-GE indicator is not also lit.
PLOT BD I, II/B-GE SELECT	Indicates that selection of the B-GE inputs has been made at the Data Quality Monitor for Plot Board I, II data.
PLOT BD I, II/B-GE CONFIRM	Indicates that signal relays controlling B-GE register inputs have been energized.
PLOT BD III/IBM 7090 SELECT	Indicates that selection of the IBM 7090 has been made at the Data Quality Monitor for Plot Board III data.

TABLE 3-1. SWITCH UNIT, FUNCTION OF CONTROLS AND INDICATORS (cont'd)

Component Designation	Function
PLOT BD III/IBM 7090 CONFIRM	Indicates that proper selection of the signal relays for the IBM 7090 has been made for Plot Board III data.
PLOT BD III/B-GE SELECT	Indicates that selection of the B-GE inputs for Plot Board III data has been made at the Data Quality Monitor.
PLOT BD III/B-GE CONFIRM	Indicates that signal relays controlling B-GE register inputs for Plot Board III data have been energized.

3.3 OPERATING PROCEDURES

As explained in paragraph 3.1, the Switch Unit is operated under control of the Data Quality Monitor. To prepare the Switch Unit for operation, it is necessary only to apply a-c power to the d-c power supply contained in the unit. This is done by depressing the POWER ON switch located on the Switch Unit control and indicator panel. Depressing this pushbutton closes the 115vac circuit, thus supplying ac to the 48vdc supply. The next step is to depress the TEST INDICATOR pushbutton on the control panel. This completes the d-c return through all the indicator lamps, causing them to light. If a lamp fails to light after the pushbutton has been depressed, the lamp should be replaced before starting operations from the Data Quality Monitor. If all the lamps light, the Switch Unit may be considered ready for operations.

To remove power from the Switch Unit, depress the POWER OFF switch on the control panel. This breaks the 115vac circuit which supplies the 48vdc supply, thereby rendering the Switch Unit inoperable. A-c power is also removed from the Switch Unit when the front door panel is opened, thereby opening the INTERLOCK switch. Also, an EMERGENCY OFF switch is located within the unit which will disconnect power near the terminal board.

CHAPTER 4

INSTALLATION

4.1 GENERAL

This chapter presents information concerning the installation of the Switch Unit in terms of unit placement and floor hole layout.

4.2 UNIT PLACEMENT

Placement of the Switch Unit should be made allowing for enough clearance both in front and at the rear of the unit so that the front or rear door may be fully opened to permit access to the machine. The width of the doors (front and rear) is 26-1/2 inches. Therefore, the minimum clearance from any other unit or obstruction should be at least 30 inches both in front and at the rear of the Switch Unit.

4.3 FLOOR HOLE LAYOUT

All external cabling into the Switch Unit is routed through the floor of the building which houses the unit. Also, the unit is bolted to the floor of the building through base frame holes. Hence, installation of the Switch Unit requires that holes be made in the floor as specified below.

The floor hole for the external cable is located within the base cutout beneath the cable connector brackets in the rear of the Switch Unit. The hole is 4 inches wide and 19-1/2 inches long. Figure 4-1 shows a rear view of the Switch Unit with the door removed; the cable hole and the frame holes for the floor mounting bolts can be seen in this figure. The insert included in the figure shows the manner in which the cables are routed and attached to the connectors. A 4-inch clearance behind the cable connector brackets permits routing the cables as shown in the insert. Raceways along which the cables are run are mounted on the back of each cable connector bracket.

The Switch Unit is secured to the floor of the building by four 3/8-inch lag bolts, 4 inches long. These bolts are inserted through the holes in the base frame as shown in figure 4-2. In buildings containing wooden floors, it is recommended that pilot holes be drilled in the flooring before attempting to secure the lag bolts. In buildings containing concrete floors, it is necessary to drill holes in the concrete and to insert expansion shields to secure the lag bolts.

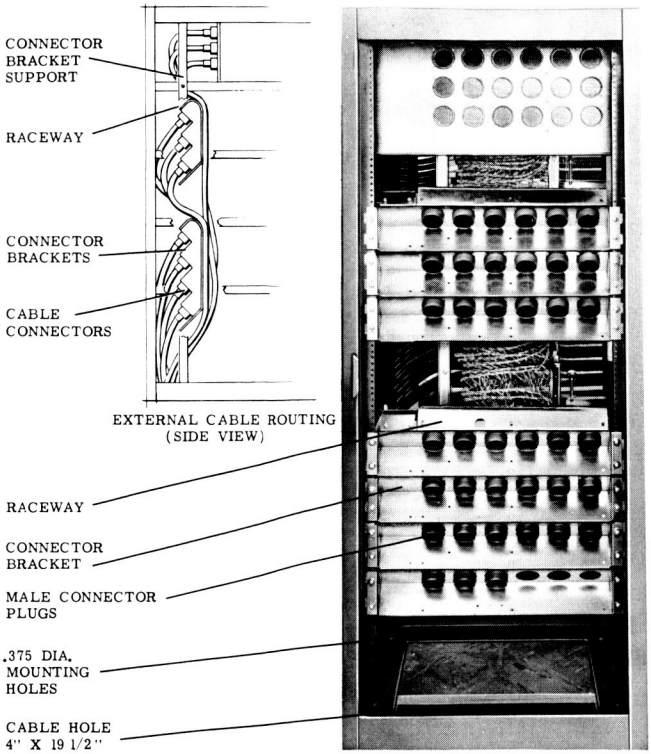

FIGURE 4-1. SWITCH UNIT, REAR VIEW, DOOR REMOVED

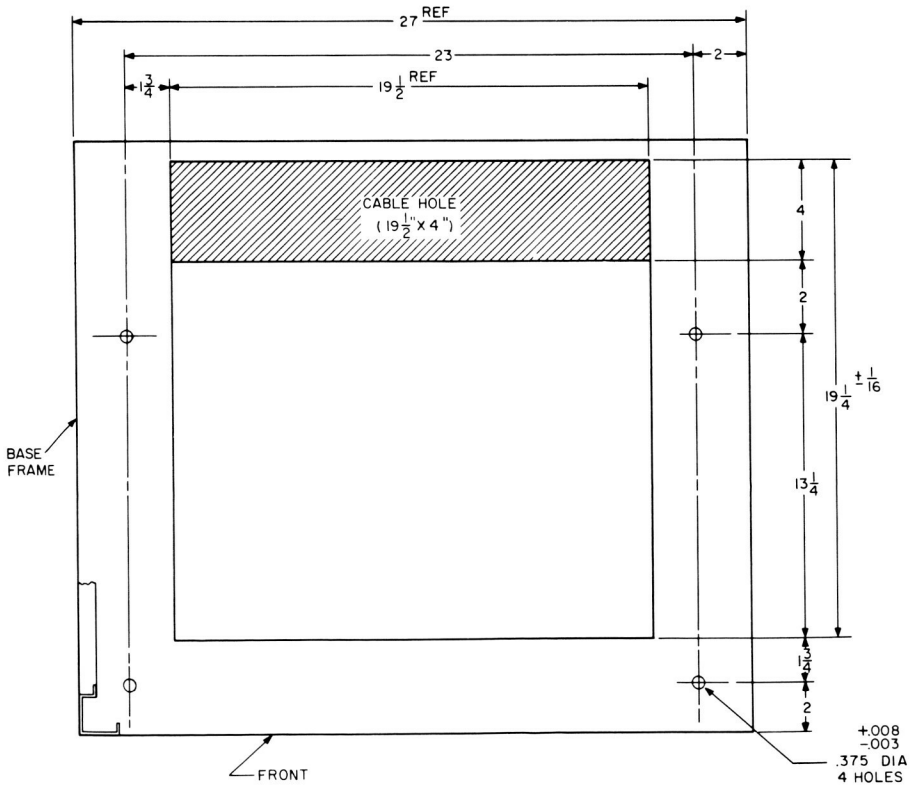

FIGURE 4-2. SWITCH UNIT, BASE CUTOUT

CHAPTER 5

MAINTENANCE

5.1 GENERAL

This chapter provides information on component location, test procedures, and corrective maintenance for the Switch Unit.

Corrective maintenance procedures are not available at this time but will be supplied at a later date based on reports from the field.

5.2 COMPONENT LOCATION

All components for the Switch Unit are readily accessible when the front or rear panel door is opened. Figure 5-1 identifies the physical location and terminal coding of all the electrical components which comprise the Switch Unit.

5.3 TEST PROCEDURES

Testing of the Switch Unit is divided into two portions: power off and power on. The first portion, power off, is designed to perform tests on (a) interlock switch, (b) fuses and circuit breakers, and (c) common signal and power lines. The other portion, power on, is designed to perform tests on (a) power supply, (b) fan, (c) indicators, (d) indicator test circuitry, (e) control relays and indicating circuitry, and (f) signal switch relays, cables, and connectors. Each portion is described briefly in the following paragraphs.

5.3.1 Power-Off Tests

All power-off tests are accomplished with an ohmmeter with a range of 0 to 10 megohms. It is suggested that a Simpson Model 260 multimeter or equivalent be used.

CAUTION

To avoid damage to the test equipment, remove all power from the unit before proceeding with this test.

Proceed as follows:

1. Disconnect external power cable from 2TB1, pins A and B.

2. Disconnect external control cable at connector 3K2.

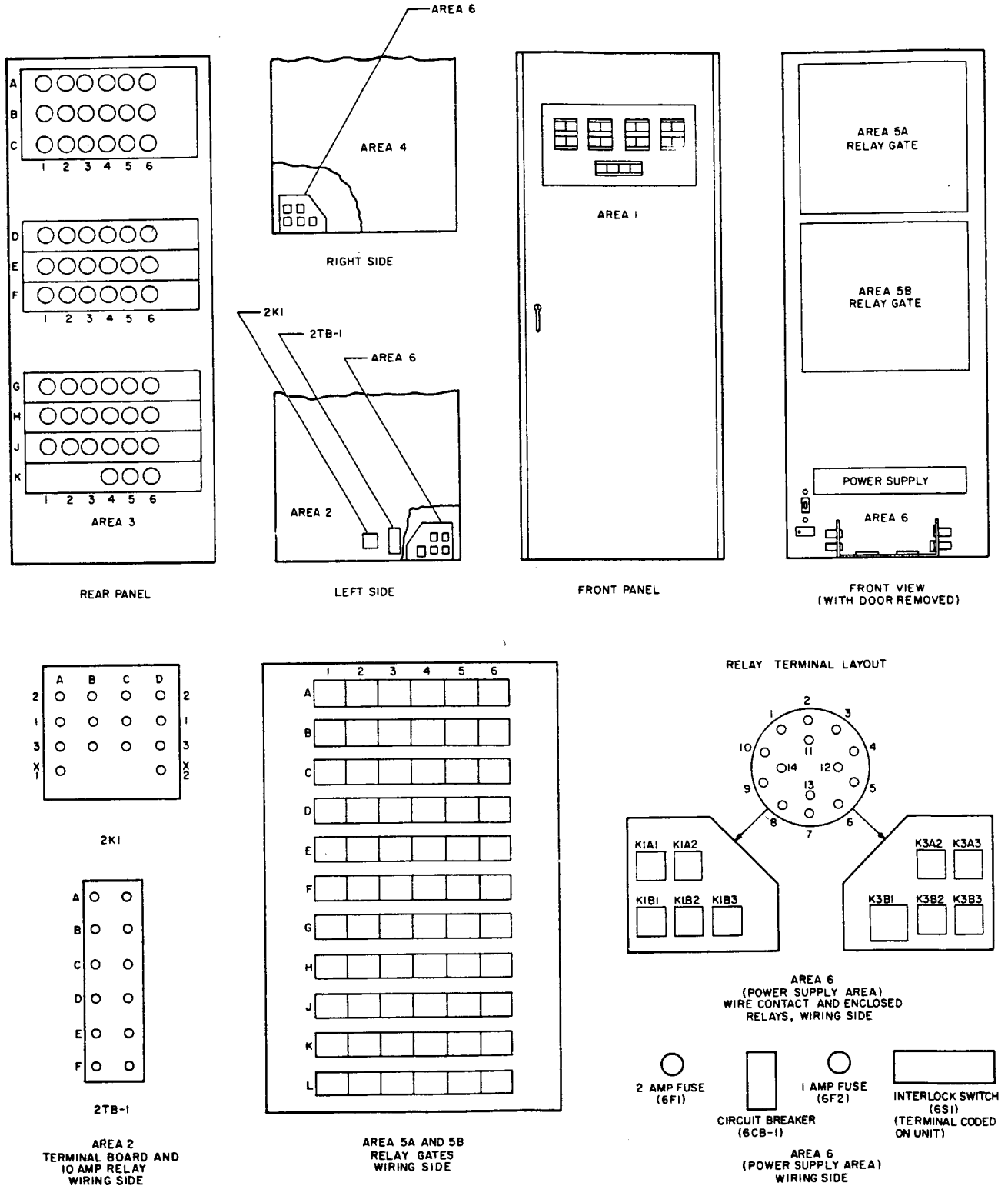

FIGURE 5-1. SWITCH UNIT, COMPONENT LOCATIONS AND TERMINAL CODING

3. Open front door and disconnect 1P1 from 6J1.

4. Check interlock switch, fuse, and circuit breaker as follows:

   a. Measure resistance between 2TB1-A and 1P1-A2. The resistance should be 10 megohms or greater (open circuit).

   b. Depress interlock switch GS1 with ohmmeter connected as in step a. The ohmmeter should not read greater than 0.5 ohm (continuity).

5. Check signal and power lines as follows:

   a. Measure resistance between the following points:

6TB1-8 to 3K2-A	3K2-13 to 3K2-B
6TB1-8 to 3K2-C	3K2-13 to 3K2-D

   The meter should not read greater than 0.6 ohm (continuity).

   b. Measure resistance between the following points:

3K2-2 to 3K2-3	3K2-6 to 3K2-7
3K2-3 to 3K2-4	3K2-8 to 3K2-9
3K2-5 to 3K2-6	3K2-9 to 3K2-10

   The meter should read 10 megohms or greater (open circuit).

6. Reconnect connector 1P1 to 6J1.

5.3.2 Power-On Tests

The power required to test the Switch Unit is 115 ± 6v, 60 ± 5-cycle ac rated at 10 amperes.

1. Connect power as follows:

   a. 115vac to 2TB1-A

   b. 115v return to 2TB1-B

   c. Equipment bond to 2TB1-C

WARNING

When power is applied to the Switch Unit, terminals on the interior of the unit are at a maximum potential of 120vac and 55vdc.

2. "Cheat" interlock switch (6S1) by pulling actuator arm forward. This applies power to the power control circuitry.

3. Check power control circuitry, fan, and power supply as follows:

   a. Depress POWER ON switch (1C3-1). This should cause the POWER ON indicator to light, the muffin fan (7F1) to operate, and 50 vdc (±2v) to appear, as measured by a voltmeter, on the output terminals of the power supply.

   b. Depress POWER OFF switch (1C1-1). This causes the power supply, fan, and POWER ON indicator to de-energize.

4. Check indicator and indicator-testing circuitry as follows:

   a. Depress POWER ON switch.

   b. Depress TEST IND switch. All indicators of the REGISTER, PLOT BD I, II, and PLOT BD III group should light.

5. Check control relay and indicating circuitry as follows:

Note

In making the following checks, it is suggested that a jumper, consisting of 12-inch insulated wire (#22 or greater) with insulated alligator clips on each end, be used.

   a. With power on and no pins of connector 3K2 jumpered, the indicators listed in table 5-1 will light and either continuity or an open circuit will exist between connector pins.

Note

The two CONFIRM indicators associated with each group must never light at the same time. If this occurs, a wire contact relay or the relay control circuitry associated with this group in area 5 is defective. The fault may be isolated by removing and replacing the jumper on pin 12C between any adjacent relays in area 5 simultaneously, noting any change in the indicators and proceeding accordingly.

b. With the 3K2 connector pins jumpered as listed in table 5-2, the indicators in the associated groups will light and either a continuity or an open circuit will exist between connector pins.

TABLE 5-1. CONTROL RELAY AND INDICATING CIRCUITRY TEST WITH NO PINS OF 3K2 JUMPERED

Group	Indicators of Group Lit	Continuity (≤0.5 Ohm)	Open Circuit (≥ 10 Megohms)
REGISTER	SELECT A CONFIRM A	3K2-2 to 3K2-3	3K2-3 to 3K2-4
PLOT BD I, II	SELECT IBM 7090 CONFIRM IBM 7090	3K2-6 to 3K2-7	3K2-5 to 3K2-6
PLOT BD III	SELECT IBM 7090 CONFIRM IBM 7090	3K2-8 to 3K2-9	3K2-9 to 3K2-10

TABLE 5-2. CONTROL RELAY AND INDICATING CIRCUITRY TEST WITH 3K2 CONNECTOR PINS JUMPERED

3K2 Connector Pins Jumpered	Group	Indicators of Group Lit	Continuity (≤0.5 Ohm)	Open Circuit (≥ 10 Megohms)
3K2-1 to 3K2-13	REGISTER	SELECT B CONFIRM B	3K2-3 to 3K2-4	3K2-2 to 3K2-3
3K2-12 to 3K2-13	PLOT BD I, II	SELECT B-GE CONFIRM B-GE	3K2-5 to 3K2-6	3K2-6 to 3K2-7
3K2-11 to 3K2-13	PLOT BD III	SELECT B-GE CONFIRM B-GE	3K2-9 to 3K2-10	3K2-8 to 3K2-9

6. Check signal switch relays, cables, and connectors as follows:

Note

When checking for continuity or open circuits between two signal connectors, the external signal cables must be removed from the two connectors.

a. With the connector pins of 3K2 jumpered as listed in tables 5-3 through 5-5, either a continuity or an open circuit will exist between the respective pins of the connectors, also shown in the tables. For example, when connector pins 3K2-1 and 3K2-13 are jumpered together, continuity will exist between pin B of connector 3A4 and pin B of connector 3C4, and an open circuit will exist between pin B of connector 3A4 and pin B of connector 3B4.

TABLE 5-3. SIGNAL SWITCH RELAY, CABLE, AND CONNECTOR TESTS, REGISTER GROUP

Connector 3K2 Pins Jumpered Together	Connectors Whose Respective Pins (A through Y, 1 through 25) Will Have:			
	Continuity (≤ 0.5 Ohm)		Open Circuit (≥ 10 Megohms)	
None	3A1 to 3B1	3D6 to 3E6	3A1 to 3C1	3D6 to 3F6
	3A2 to 3B2	3G1 to 3H1	3A2 to 3C2	3G1 to 3J6
	3A3 to 3B3	3G2 to 3H2	3A3 to 3C3	3G2 to 3J6
	3A4 to 3B4	3G3 to 3H3	3A4 to 3C4	3G3 to 3J6
	3A5 to 3B5	3G4 to 3H4	3A5 to 3C5	3G4 to 3J6
	3A6 to 3B6	3G5 to 3H5	3A6 to 3C6	3G5 to 3J6
	3D1 to 3E1	3G6 to 3H6	3D1 to 3F1	3G6 to 3J6
	3D2 to 3E2		3D2 to 3F2	3G4 to 3K4
	3D3 to 3E3		3D3 to 3F3	3G5 to 3K5
	3D4 to 3E4		3D4 to 3F4	3G6 to 3K6
	3D5 to 3E5		3D5 to 3F5	
3K2-1 to 3K2-13	3A1 to 3C1	3D6 to 3F6	3A1 to 3B1	3D6 to 3E6
	3A2 to 3C2	3G1 to 3J1	3A2 to 3B2	3G1 to 3H1
	3A3 to 3C3	3G2 to 3J2	3A3 to 3B3	3G2 to 3H2
	3A4 to 3C4	3G3 to 3J3	3A4 to 3B4	3G3 to 3H3
	3A5 to 3C5	3G4 to 3J4	3A4 to 3B5	3G4 to 3H4
	3A6 to 3C6	3G5 to 3J5	3A6 to 3B6	3G5 to 3H5
	3D1 to 3F1	3G6 to 3J6	3D1 to 3E1	3G6 to 3H6
	3D2 to 3F2		3D2 to 3E2	3G4 to 3K4
	3D3 to 3F3		3D3 to 3E3	3G5 to 3K5
	3D4 to 3F4		3D4 to 3E4	3G6 to 3K6
	3D5 to 3F5		3D5 to 3E5	

TABLE 5-4. SIGNAL SWITCH RELAY, CABLE, AND CONNECTOR TESTS, PLOT BD I, II GROUP

Connector 3K2 Pins Jumpered Together	Connectors Whose Respective Pins (11 through 25, K through Y) Will Have Continuity (0.5 Ohm)
3K2-12 to 3K2-13	3G4 to 3K4 3G5 to 3K5 3G6 to 3K6

TABLE 5-5. SIGNAL SWITCH RELAY, CABLE, AND CONNECTOR TESTS, PLOT BD III GROUP

Connector 3K2 Pins Jumpered Together	Connectors Whose Respective Pins (1 through 10, A through J) Will Have Continuity (0.5 Ohm)
3K2-11 to 3K2-12	3G4 to 3K4 3G5 to 3K5 3G6 to 3K6

b. Pins 4.5 (+) and 4.5 (-) of the following connectors will have continuity (not greater than 0.5 ohm):

3A1 to 3B1 to 3C1	3D4 to 3E4 to 3F4
3A2 to 3B2 to 3C2	3D5 to 3E5 to 3F5
3A3 to 3B3 to 3C3	3D6 to 3E6 to 3F6
3A4 to 3B4 to 3C4	3G1 to 3H1 to 3J1
3A5 to 3B5 to 3C5	3G2 to 3H2 to 3J2
3A6 to 3B6 to 3C6	3G3 to 3H3 to 3J3
3D1 to 3E1 to 3F1	3G4 to 3H4 to 3J4 to 3K4
3D2 to 3E2 to 3F2	3G5 to 3H5 to 3J5 to 3K5
3D3 to 3E3 to 3F3	3G6 to 3H6 to 3J6 to 3K6

7. Each d-c relay coil in area 6 and each column 6 relay coil in area 5 is paralleled by a diode (IN538) to suppress arcing in the coils. If indications of arcing appear, remove diode and measure forward and backward resistances. Replace diode if defective.

8. The number 12 contacts of each relay in area 5 are used in the CONFIRM indicating circuitry. These contacts are wired in parallel with the normally open contacts commoned, the normally closed contacts commoned, and the common contacts commoned. To test an individual number 12 contact, remove wire jumpers from "common" contact and check continuity from "common" contact to the "normally closed" and "normally open" contacts with the relay both de-energized and energized. This test is not required for the unit test.

This completes the test of the Switch Unit. All cables disconnected for test purposes should be reconnected and the unit should be restored to operation.

5.4 CORRECTIVE MAINTENANCE

At present, corrective maintenance information is not available. However, it will be supplied at a later date based on reports from the field.

CHAPTER 6

ILLUSTRATED PARTS BREAKDOWN

SECTION 1

INTRODUCTION

1.1 GENERAL

The replaceable assemblies, subassemblies, and detail parts of the Switch Unit are listed and illustrated in this chapter. This unit is manufactured by the International Business Machines Corporation, Federal Systems Division, Kingston, N. Y.

1.2 PURPOSE AND SCOPE

This Illustrated Parts Breakdown is used to obtain replacement parts and subassemblies for the Switch Unit. A composite exploded view is used to show the disassembly of the unit. The Group Assembly Parts List (Sect. 2) provides a listing of each part (keyed to index numbers on the exploded view) by part number, description, and quantity used for each assembly. Section 3 provides a listing of the relay cable assembly by part number and description of cable connections.

SECTION 2

GROUP ASSEMBLY PARTS LIST

List & Index No.	Part No.	Description	Units Per Assembly
1-	5203388	Switch Unit Assembly (See fig. 6-1 for illustration.)	Ref
-1	562-1023	Frame	1
-2	562-1228	Cover, Cable Entry	1
-3	3513857	Screw, Hex. Hd	4
-4	3208147	Washer, Flat	8
-5	3208485	Lockwasher	4
-6	3208140	Nut, Hex.	4
-7	562-1130	Power Supply	1
-8	3513898	Screw, Hex. Hd	8
-9	3208389	Washer, Flat	16
-10	3213036	Lockwasher	8
-11	3512745	Nut, Hex.	8
-12	3003656	Socket, Relay	9
-13	No No.	Screw, Fil Hd	9
-14	3514401	Washer, Flat	9
-15	3208332	Lockwasher	9
-16	3208403	Nut, Hex.	9
-17	255735P	Relay Wire Contact, 12-Pos	2

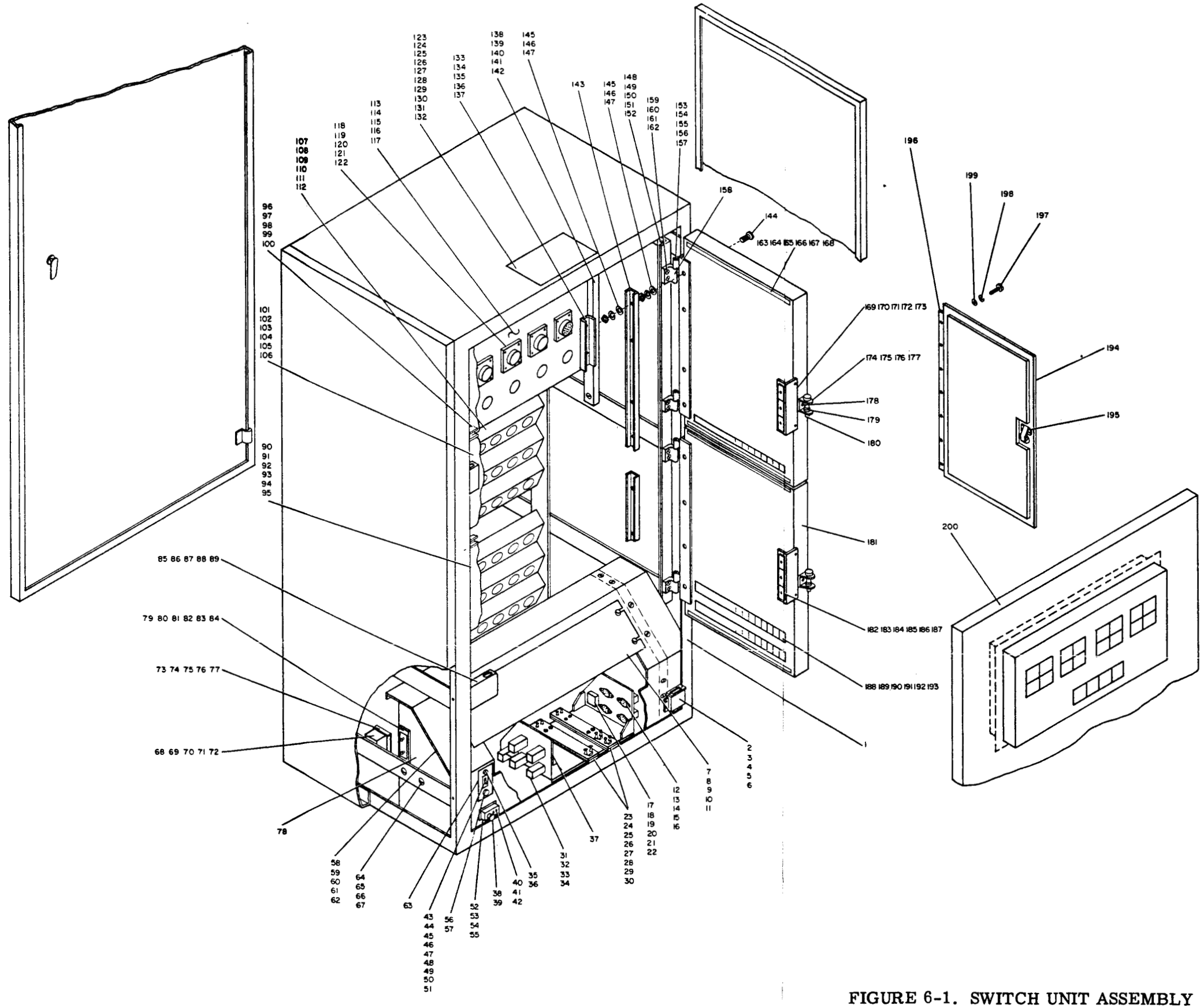

FIGURE 6-1. SWITCH UNIT ASSEMBLY

List & Index No.	Part No.	Description	Units Per Assembly
1-18	159943P	Socket, Relay	2
-19	3212611	Screw, Hex. Hd	8
-20	3514401	Washer, Flat	8
-21	3208332	Lockwasher	8
-22	3208403	Nut, Hex.	8
-23	562-1262	Diode Bd, Marking Assy	1
-24	562-1265	Diode Bd, Marking Assy	1
-25	3212261	Diode,Type 1N538	31
-26	3213679	Diode,Type 1N540	34
-27	562-1154	Spacer, Insulating	2
-28	3213023	Washer, Flat	16
-29	3000835	Lockwasher	8
-30	3208148	Nut, Hex.	8
-31	3003150	Relay, Enclosed, 48v	9
-32	3208146	Washer, Flat	18
-33	3108901	Lockwasher	8
-34	3208153	Nut, Hex.	8
-35	3109148	Fuse Holder	2
-36	3097390	Fuse, 1-Amp	1
-37	562-1024	Bracket, Mtg, Diode Bd	1
-38	3004746	Bumper, Interlock Sw	1
-39	3004200	Interlock Switch	1
-40	No No.	Screw, Fil Hd	2
-41	3208146	Washer, Flat	4

List & Index No.	Part No.	Description	Units Per Assembly
1-42	3108901	Lockwasher	2
-43	3083338	Circuit Breaker	1
-44	562-1260	Cover, Safety CB	1
-45	No No.	Screw, Fil Hd	2
-46	3208146	Washer, Flat	4
-47	3108901	Lockwasher	4
-48	3513883	Screw, Hex. Hd	5
-49	3208147	Washer, Flat	10
-50	3208485	Lockwasher	5
-51	3208140	Nut, Hex.	5
-52	562-1259	Cover, Safety Interlock Sw	1
-53	3213023	Washer, Flat	2
-54	3000835	Lockwasher	2
-55	3208148	Nut, Hex.	2
-56	3109148	Fuse Holder	1
-57	3097837	Fuse, 2-Amp	1
-58	562-1025	Bkt-Mtg, Power Supply	1
-59	3513857	Screw, Hex. Hd	8
-60	3208147	Washer, Flat	16
-61	3208485	Lockwasher	8
-62	3208140	Nut, Hex.	8
-63	562-1261	Plate, Identification	1
-64	3513946	Screw, Hex. Hd	2
-65	3208389	Washer, Flat	2

List & Index No.	Part No.	Description	Units Per Assembly
1-66	3213036	Lockwasher	2
-67	3512745	Nut, Hex.	2
-68	3127249	Relay, 10-Amp	1
-69	3208415	Screw, Fil Hd	4
-70	3213023	Washer, Flat	8
-71	3000835	Lockwasher	4
-72	3208148	Nut, Hex.	4
-73	562-1229	Cover, Safety	1
-74	3208415	Screw, Fil Hd	2
-75	3213023	Washer, Flat	4
-76	3000835	Lockwasher	2
-77	3208148	Nut, Hex.	2
-78	562-1226	Cover, Safety	1
-79	3003368	Terminal Board	1
-80	3095433	Marker Strip	1
-81	3513883	Screw, Hex. Hd	2
-82	3208147	Washer, Flat	4
-83	3208485	Lockwasher	2
-84	3208140	Nut, Hex.	2
-85	562-1017	Bkt-Latch, Relay Gate	2
-86	3513946	Screw, Hex. Hd	4
-87	3208389	Washer, Flat	8
-88	3213036	Lockwasher	4
-89	3512745	Nut, Hex.	4

List & Index No.	Part No.	Description	Units Per Assembly
1-90	562-1011	Raceway, Lower	1
-91	3513857	Screw, Hex. Hd	6
-92	3208147	Washer, Flat	12
-93	3208485	Lockwasher	4
-94	3208140	Nut, Hex.	6
-95	562-1101	Bkt-Bottom, Cable Clamp	1
-96	562-1014	Clamp Bar, Ext Cable	4
-97	3511627	Screw, Hex. Hd	6
-98	3208389	Washer, Flat	12
-99	3213036	Lockwasher	6
-100	3512745	Nut, Hex.	6
-101	562-1102	Bkt-Top, Cable Clamp	1
-102	562-1012	Raceway, Upper	1
-103	3513857	Screw, Hex. Hd	6
-104	3208147	Washer, Flat	12
-105	3208485	Lockwasher	6
-106	3208140	Nut, Hex.	6
-107	562-1007	Bracket, Connector	6
-108	562-1028	Bracket, Conn, Special	1
-109	3513857	Screw, Hex. Hd	28
-110	3208147	Washer, Flat	28
-111	3208485	Lockwasher	28
-112	3208140	Nut, Hex.	28
-113	562-1013	Bracket, Connector	1

List & Index No.	Part No.	Description	Units Per Assembly
1-114	3513857	Screw, Hex. Hd	4
-115	3208147	Washer, Flat	8
-116	3208485	Lockwasher	4
-117	3208140	Nut, Hex.	4
-118	3102A-36-404P	Connector	60
-119	3513857	Screw, Hex. Hd	240
-120	3208147	Washer, Flat	480
-121	3208485	Lockwasher	240
-122	3028140	Nut, Hex.	240
-123	562-1022	Cover, Fan	1
-124	No No.	Fan, Muffin (Rotron)	1
-125	3513883	Screw, Hex. Hd	5
-126	3208389	Washer, Flat	10
-127	3213036	Lockwasher	5
-128	3512745	Nut, Hex.	5
-129	No No.	Screw, Fil Hd	4
-130	3208146	Washer, Flat	8
-131	3108901	Lockwasher	4
-132	3208153	Nut, Hex.	4
-133	562-1026	Clamp-Bar, Int. Cable	1
-134	3514459	Screw, Hex. Hd	3
-135	3208389	Washer, Flat	6
-136	3213036	Lockwasher	3
-137	3512745	Nut, Hex.	3

List & Index No.	Part No.	Description	Units Per Assembly
1-138	562-1027	Support-RH, Conn Bkt	1
-139	3511621	Screw, Hex. Hd	2
-140	3514419	Washer, Flat	4
-141	3514082	Lockwasher	2
-142	3512748	Nut, Hex.	2
-143	562-1029	Clamp-Bar, Relay Gate	2
-144	3514459	Screw, Hex. Hd	8
-145	3208389	Washer, Flat	16
-146	3213036	Lockwasher	8
-147	3512745	Nut, Hex.	8
-148	562-1015	Support, Hinge, Relay Gate	1
-149	3511623	Screw, Hex. Hd	3
-150	3514419	Washer, Flat	6
-151	3514082	Lockwasher	3
-152	3512748	Nut, Hex.	3
-153	3200015	Hinge	4
-154	3004434	Screw, Flat Hd	16
-155	3208389	Washer, Flat	32
-156	3213036	Lockwasher	16
-157	3512745	Nut, Hex.	16
-158	3200016	Hinge Bkt & Pin Assy	4
-159	3004434	Screw, Flat Hd	16
-160	3208389	Washer, Flat	32
-161	3213036	Lockwasher	16
-162	3512745	Nut, Hex.	16

List & Index No.	Part No.	Description	Units Per Assembly
1-163	562-1254	Baffle Angle, Relay Gate	4
-164	562-1253	Baffle, Relay Gate	4
-165	No No.	Screw, Fil Hd	28
-166	3208146	Washer, Flat	56
-167	3108901	Lockwasher	28
-168	3208153	Nut, Hex.	28
-169	562-1225	Bkt-Mtg, Tapered Pin Cover	2
-170	3513857	Screw, Hex. Hd	4
-171	3208147	Washer, Flat	8
-172	3208485	Lockwasher	4
-173	3208140	Nut, Hex.	4
-174	3201270	Bkt-Gate Latch	2
-175	3513857	Screw, Hex. Hd	4
-176	3208147	Washer, Flat	8
-177	3208485	Lockwasher	4
-178	562-1327	Spacer, Relay Gate Latch	2
-179	562-1328	Spring, Compression	2
-180	3201271	Pin, Gate Latch	2
-181	562-1010	Relay Gate Assy	2
-182	3010495	Insulator	6
-183	3010350	Conn, Tapered Pin	6
-184	3000602	Screw, Fil Hd	6
-185	3514401	Washer, Flat	6
-186	3208332	Lockwasher	6

List & Index No.	Part No.	Description	Units Per Assembly
1-187	3208403	Nut, Hex.	6
-188	255735P	Relay, Wire Contact, 12-Pos	132
-189	159943P	Socket, Relay	132
-190	3212611	Screw, Hex. Hd	528
-191	3514401	Washer, Flat	528
-192	3208332	Lockwasher	528
-193	3208403	Nut, Hex.	528
-194	562-1021	Door, Relay Gate	2
-195	3004426	Latch Button	2
-196	3204834	Hinge, Relay Gate Door	2
-197	3208415	Screw, Fil Hd	14
-198	3213023	Washer, Flat	28
-199	3000835	Lockwasher	14
-200	No No.	Sw and Ind. Assy (See List 2 for breakdown and fig. 6-2 for illustration.)	1
2-	No No.	Switch and Indicator Assy	Ref
-1	562-1005	Switch and Indicator Panel	1
-2	562-1006	Switch and Indicator Assy, Cover	1
-3	3020416	Unitized Lamp Assy, Housing	1
-4	3020417	Unitized Lamp Assy, Housing	1
-5	3020033	End Plate	8
-6	3019049	Spacer	11

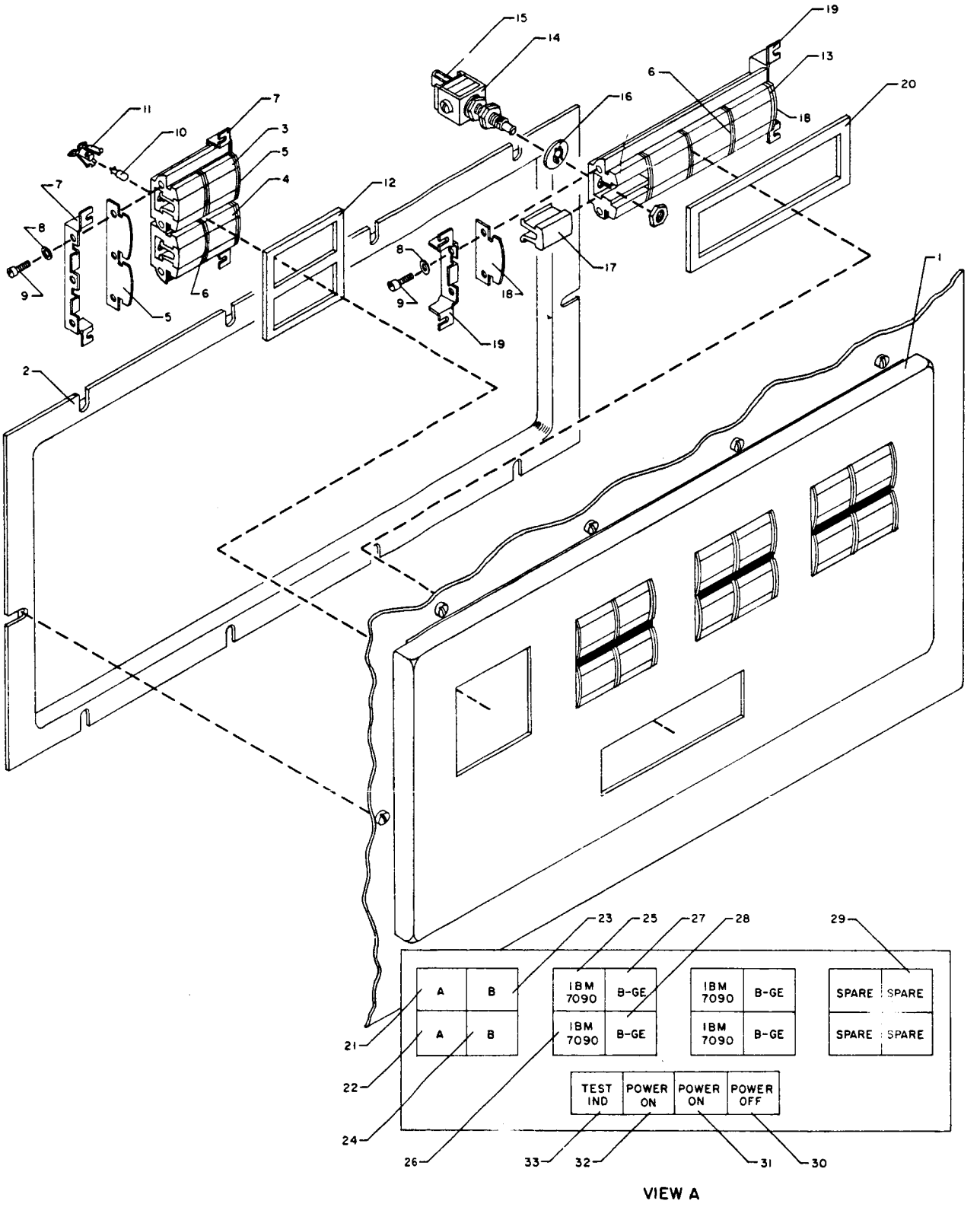

FIGURE 6-2. SWITCH UNIT, SWITCH AND INDICATOR ASSEMBLY

List & Index No.	Part No.	Description	Units Per Assembly
2-7	3091641	Bracket	8
-8	3000836	Lockwasher, #10	28
-9	3000627	Fil HD Screw x 5/8 LG, #10-32	28
-10	3003208	Lamp	13
-11	3095257	Lamp Holder	13
-12	3020071	Cushion	4
-13	3020066	Unitized Switch Assy, Housing	1
-14	3003014	Actuator, Switch	3
-15	3003013	Micro Switch	3
-16	3004991	Retaining Washer	3
-17	562-1141	Button, Engraved	1
-18	3019121	End Plate	2
-19	3020040	Bracket	2
-20	3019027	Cushion	1
-21	562-1114	Lens, Engraved, White	1
-22	562-1110	Lens, Engraved, Green	1
-23	562-1115	Lens, Engraved, White	1
-24	562-1111	Lens, Engraved, Green	1
-25	562-1098	Lens, Engraved, White	2
-26	562-1113	Lens, Engraved, Green	2
-27	562-1116	Lens, Engraved, White	2
-28	562-1112	Lens, Engraved, Green	2
-29	3019493	Lens, Spare	4
-30	562-1142	Button, Power Off	1
-31	562-1109	Lens, Green, Power On	1
-32	3019500	Button, Power On	1

SECTION 3

RELAY CABLE ASSEMBLY

3.1 GENERAL

This section provides cable assembly listings for relay gates A and B of the Switch Unit. The cables are listed by part number and include a description of the termination points of each cable.

3.2 RELAY GATE A

The following list identifies, by part number, the cable assemblies used to connect the relay gate A assembly relays to the rear panel connectors of the Switch Unit:

Part No.	Termination Points
562-1032	Connector A1 to Relay Row A
562-1033	Connector B1 to Relay Row A
562-1034	Connector C1 to Relay Row A
562-1035	Connector A2 to Relay Row B
562-1036	Connector B2 to Relay Row B
562-1037	Connector C2 to Relay Row B
562-1038	Connector A3 to Relay Row C
562-1039	Connector B3 to Relay Row C
562-1040	Connector C3 to Relay Row C
562-1041	Connector A4 to Relay Row D
562-1042	Connector B4 to Relay Row D
562-1043	Connector C4 to Relay Row D
562-1044	Connector A5 to Relay Row E
562-1045	Connector B5 to Relay Row E

Part No.	Termination Points
562-1046	Connector C5 to Relay Row E
562-1047	Connector A6 to Relay Row F
562-1048	Connector B6 to Relay Row F
562-1049	Connector C6 to Relay Row F
562-1050	Connector D1 to Relay Row G
562-1051	Connector E1 to Relay Row G
562-1052	Connector F1 to Relay Row G
562-1053	Connector D2 to Relay Row H
562-1054	Connector E2 to Relay Row H
562-1055	Connector F2 to Relay Row H
562-1056	Connector D3 to Relay Row J
562-1057	Connector E3 to Relay Row J
562-1058	Connector F3 to Relay Row J
562-1059	Connector D4 to Relay Row K
562-1060	Connector E4 to Relay Row K
562-1061	Connector F4 to Relay Row K
562-1062	Connector D5 to Relay Row L
562-1063	Connector E5 to Relay Row L
562-1064	Connector F5 to Relay Row L

3.3 RELAY GATE B

The following list identifies, by part number, the cable assemblies used to connect the relay gate B assembly relays to the rear panel connectors of the Switch Unit:

Part No.	Termination Points
562-1065	Connector E6 to Relay Row A
562-1066	Connector F6 to Relay Row A
562-1067	Connector G1 to Relay Row B

Part No.	Termination Points
562-1068	Connector H1 to Relay Row B
562-1069	Connector J1 to Relay Row B
562-1070	Connector G2 to Relay Row C
562-1071	Connector H2 to Relay Row C
562-1072	Connector J2 to Relay Row C
562-1073	Connector G3 to Relay Row D
562-1074	Connector H3 to Relay Row D
562-1075	Connector J3 to Relay Row D
562-1076	Connector H4 to Relay Row E
562-1077	Connector J4 to Relay Row E
562-1078	Connector H5 to Relay Row G
562-1079	Connector J5 to Relay Row G
562-1080	Connector H6 to Relay Row J
562-1081	Connector J6 to Relay Row J
562-1082	Connector G4 to Relay Row F
562-1083	Connector K4 to Relay Row F
562-1084	Connector G5 to Relay Row H
562-1085	Connector K5 to Relay Row H
562-1086	Connector G6 to Relay Row K
562-1087	Connector K6 to Relay Row K
562-1088	Connector D6 to Relay Row A

APPENDIX A

INSTRUCTION MANUAL

FOR

POWER SUPPLY, TYPE LH 508 – MODEL 50

DELTRON, INCORPORATED

2905 N. Leithgow Street

Philadelphia 33, Pennsylvania

SERIES LH
LIMITED RANGE
SOLID-STATE REGULATED D-C POWER SUPPLIES

GENERAL DESCRIPTION

The series LH power supplies are designed for an exact voltage in the range of 0 - 100vdc, adjustable over a 2v band. In voltage below 8v, the supplies are available in current ratings up to 20 amperes; over 8v, they are available in current ratings up to 12 amperes.

The model designations follow a simple system. They are prefixed with the letters LH followed by a number designating the maximum voltage available in the series. This number is then followed by an additional number which indicates the current rating of the supply. Following is a dash number which specifies the upper limit of the adjustable voltage range. The output voltage will then be adjustable from this figure down to a voltage which is 2v below it.

The LH series is broken down into five groups depending upon the maximum voltage available in any one group. These are the LH8, LH24, LH50, LH75, and LH100 series.

SPECIFICATIONS

The load regulation is less than ±0.1% or ±10 mv, whichever is greater. This regulation is for a load change of from zero to maximum rating current.

Line Regulation

The line regulation is less than ±0.1% or ±10 mv, whichever is greater for line changes from 105 - 125vac.

Ripple

The ripple in the output voltage is less than 0.01% or 1mv, whichever is greater under the worst possible conditions of line and load. The ripple voltage is the RMS value as measured with an isolated wide band vacuum tube voltmeter.

Response Time

The response time is less than 50 usec for a load step change of 0 - 100% of full load or a line step change of ±10%.

Drift

The output voltage will not leave the regulation zone for long periods of time. Each instrument is checked for drift over an 8-hour period.

Temperature Range

The ambient temperature range of these supplies is from 0 - 50°C.

Temperature Stability

The normal temperature coefficient of voltage is less than ±0.05% per degree centigrade. These instruments are available with a coefficient of less than ±0.01% per degree centigrade by specifying a temperature-compensated unit. For a compensated unit, add the suffix T to the model number.

Input Voltage

This series of instruments operates under an input voltage range of 105 - 125vac, 50/60 cycles, single-phase.

Protective Circuits

The output is short-circuit-protected and overcurrent-limited by means of a fast-acting circuit breaker arrangement. The power supplies are protected against internal failure by means of an input fuse.

Finish

The panel is normally supplied in black wrinkle finish with engraved designations. Other finishes are available on request.

Polarity

The output is completely floating so that either the positive or negative terminal may be grounded to the chassis.

Metering

Output voltage and current meters are available as optional equipment. If a metered unit is desired, the suffix M should be added to the model number.

Note

The above specifications are subject to change without notice.

OPERATING INSTRUCTIONS

The series LH power supplies are designed for remote load voltage sensing. It is extremely important that these sensing connections be made before energizing the unit. If remote sensing is not desired, a short jumper should be connected between the sensing terminal and its respective output terminal. The instrument is then connected to the proper source of voltage at the line terminals located at the rear of the instrument. Before turning on the main power switch, the circuit breaker must be in its on position. The main power switch is then turned to the on position which causes output voltage to appear both at the front and rear terminals of the instrument. The load is then connected

to either the front or rear d-c output terminals. Be sure that the current drawn is within the rating of the supply.

For standby operation, the main power switch is employed so that the unit can be turned off and on under fully loaded conditions. In the event that excess current is drawn or a short circuit occurs, the circuit breaker will trip open, preventing internal and external damage. To reset the supply whenever the circuit breaker opens, proceed as follows:

1. Turn off main power switch.

2. Wait several seconds and close reset circuit breaker.

3. Turn supply back on, using main power switch.

WARNING

To avoid possible injury to personnel, the d-c circuit breaker must not be used as a standby switch. Employing the circuit breaker removes only d-c voltage, leaving a-c still present. Standby operation is accomplished by use of the main power switch as described in the preceding paragraph.

For remote sensing, the load is connected to the supply either at the front or at the rear terminals, respectively marked B+ and B-. Connecting wires should be of a gauge capable of carrying the rated output current of the supply. A pair of wires, 22 gauge or larger, is connected from the load back to the appropriate sensing terminals. Be sure to observe the proper polarity in making this connection. The instrument is then ready to furnish load voltage to the load on a remote sensing basis. The same procedure should be followed in applying the power described in the preceding paragraphs.

The output voltage can be adjusted in a continuous manner whether the supply is loaded or unloaded. The voltage control is usually furnished as a locking adjustment but may also be furnished with a knob control if desired. When installing this series of power supplies, do not obstruct the bottom or top of the unit because an adequate air supply must be available for the internal fan cooling.

CIRCUIT DESCRIPTION

The circuits of the series LH power supplies are basically similar except for several minor variations such as component values, transformer tap connections, and the reference circuits utilized. A raw d-c voltage is developed by means of a full-wave silicon rectifier circuit. Input filtering is accomplished with a large capacitor filter. This voltage is then fed to a transistor series regulator consisting of power pass transistors mounted on appropriate heat sinks and operated in conjunction with a number of current drivers. In the higher voltage units, use is made of a series arrangement of two or more such groups to keep all transistors well within their maximum voltage rating.

The current amplifiers are driven by a loop amplifier which is basically a common emitter difference amplifier. This difference amplifier compares a fraction of the output voltage with an internal Zener reference source. A regenerative feedback arrangement

is employed to adjust the supplies so they have (approximately) a zero output impedance and, hence, good regulation performance. In the higher voltage units, the Zener element is fed from the regulated output.

In the lowest voltage series, where the zero output must be encompassed, the Zener reference is incorporated in a circuit which allows comparison down to the zero output voltage. A stabilizing capacitor is used to prevent circuit oscillations. An output capacitor is provided to allow high-peak, short-study cycle pulses to be drawn from the supplies without being carried out of the regulation zone. A fast-acting circuit breaker is employed to provide overcurrent and short-circuit protection. A small auxiliary bias source is utilized to feed the collector of the difference amplifier which provides better regulation by removing the effect of the input changes from the loop amplifier. The difference amplifier is employed to cancel out thermal voltage drift caused by transistor emitter-to-base voltage variations with temperature. The sensing resistors are all wire-wound types which are used to minimize voltage drift caused by temperature coefficient or resistance.

SERVICE AND MAINTENANCE

The LH series power supplies are built with high quality components and are carefully assembled and wired. The majority of failures that occur can be traced to a faulty semiconductor component, the most common failure being a collector-to-emitter short in one of the pass transistors. This can arise from several causes:

a. Too many or too rapidly occurring short circuits.

b. Improper use of the circuit breaker.

c. Aging failure due to the state of the transistor art.

d. Excessive ambient temperature or restricted air flow in the vicinity of the power supply.

The breakdown of a pass or driver transistor is manifested by a loss of regulation, a large increase in the ripple, so that the output voltage rises until it is equal to the input voltage at the filter capacitors. To remedy this fault, the bad transistor should be located and replaced with an equivalent type. In units where there are many pass transistors in parallel, equalized with small emitter resistors, usually only one transistor will fail. As an aid in locating the faulty unit, a moderate current should be drawn, and the voltage across the equalizing resistors should be measured. It will generally be found that one transistor is carrying most of the current, which indicates that it is defective. Occasionally, another type of malfunction occurs. This is characterized by a gradual rise in the output voltage, particularly after the supply has been operated a long time under high ambient conditions. This is generally due to a transistor which has excessive leakage.

Although all transistors are checked before utilization in the equipment, it occasionally happens that a unit will have a high I_{CO} at some intermediate voltage even though its leakage current will be within selection ratings at the normal test voltages employed. Occasionally, transistor leakage current will increase with age due to an inherent impurity in the semiconductor material. To determine which transistor is causing the malfunction, proceed as follows:

1. Each resistor in the circuit utilized to bleed off the leakage current should be paralleled with a resistor of equal value. If this paralleling corrects the output voltage drift, the transistor whose base is connected to this resistor is the leaky unit, and it should be replaced with an identical type. The bleed resistors are those connected to the respective bases of the driver and pass transistors.

2. If this operation does not cure the drift, an additional bleed resistor equal in value to the internal bleed resistor should be paralleled across it. If this eliminates the drift, one of the pass transistors is leaky from collector to emitter. The pass transistors should then be checked on a suitable tester, and the leaky unit should be replaced.

3. If the above procedures fail, the bottom driver fed from the difference amplifier undoubtedly has an excessive leakage current. This can be checked by paralleling a resistor of equal value across the common emitter resistor of the difference pair. If this eliminates the drift, the bottom driver should be replaced.

Other circuit malfunctions are traced by means of ordinary volt-ohmmeter measurements taken on the other components in the supplies.

A circuit diagram for the LH supply appears in Chapter 2 of this manual. The parts list (table A-1) is included as part of this appendix to aid in troubleshooting procedures.

WARRANTY

Deltron, Inc. warrants each instrument it manufactures to be free from defects of material and workmanship. Under this warranty, company liability is restricted to servicing and adjusting any instrument returned to the factory for such purposes and to replace defective parts (except fuses, rectifiers, and transistors). The period of this warranty is one year after delivery to the original purchaser provided that the instrument is returned (shipping charges prepaid by the original purchaser) and, upon examination, is found to be actually defective. Damage caused by misuse or abnormal operation conditions will be repaired and billed at cost. An estimate will be submitted before this work is undertaken.

TABLE A-1. LH POWER SUPPLY, PARTS LIST

Quantity	Item	Ref. No.	Description	Mfr. Name and/or Part No.
X	1	C2236	Schematic	
1	2	B101	Motor, fan	Lloyd Scruggs
1	3	C101	Capacitor, 10,000uf, 100v	
2	4	C102	Capacitor, 0.01uf, 400v	C-D PJ4S1
X	5	C103	Capacitor, same as C102	
1	6	C104	Capacitor, 1000uf, 50v	General Electric
1	7	C105	Capacitor, 25uf, 50v	General Electric
1	8	C106	Capacitor, 2uf, 200v	Potter MW 1A2B2
1	9	CB101	Circuit breaker, 8.8-ampere	Heinemann PAM13
4	10	CR101	Rectifier, silicon, BY722	Bradley
X	11	CR102	Rectifier, same as CR101	
X	12	CR103	Rectifier, same as CR101	
X	13	CR104	Rectifier, same as CR101	
1	14	CR105	Stabistor, SG-22	Transition
1	15	CR106	Rectifier, silicon, TM 3	Transition
2	16	CR107	Voltage regulator, PS 6469	Pacific Semiconductor
X	17	CR108	Voltage regulator, same as CR107	
1	18	F101	Fuse, 10-ampere	Littlefuse 3AB
1	19	I101	Pilot lamp, neon	GE NE51
1	20	J101	Binding post, 5-way, black	Superior DF 30BC
1	21	J102	Binding post, 5-way, white	Superior DF 30WT
1	22	J103	Binding post, 5-way, red	Superior DF 30RC
4	23	Q101	Transistor, 2N1008B	Bendix
X	24	Q102	Transistor, same as Q101	
1	25	Q103	Transistor, 2N224	Lansdale

TABLE A-1. LH POWER SUPPLY, PARTS LIST (cont'd)

Quantity	Item	Ref. No.	Description	Mfr. Name and/or Part No.
X	26	Q104	Transistor, same as Q101	
X	27	Q105	Transistor, same as Q101	
2	28	Q106	Transistor, 2N1126A	Bendix
X	29	Q107	Transistor, same as Q106	
8	30	Q108	Transistor, 2N441	Delco
X	31	Q109	Transistor, same as Q108	
X	32	Q110	Transistor, same as Q108	
X	33	Q111	Transistor, same as Q108	
X	34	Q112	Transistor, same as Q108	
X	35	Q113	Transistor, same as Q108	
X	36	Q114	Transistor, same as Q108	
X	37	Q115	Transistor, same as Q108	
-	38	Q116	Transistor, same as Q108	
-	39	Q117	Transistor, same as Q108	
-	40	Q118	Transistor, same as Q108	
-	41	Q119	Transistor, same as Q108	
1	42	R101	Resistor, 500-ohm, 10 w, wire-wound	Ohmite
2	43	R102	Resistor, 22K ± 10% 1 w	AB Type GB
X	44	R103	Resistor, same as R102	
2	45	R104	Resistor, 800-ohm, 3 w, wire-wound	Ohmite
X	46	R105	Resistor, same as R104	
1	47	R106	Resistor, 22K ± 10%, 1 w	AB Type GB
1	48	R107	Resistor, 15K ± 10%, 1 w	AB Type GB
1	49	R108	Resistor, 5.6K ± 10% 2 w, wire-wound	IRC Type BW-2

TABLE A-1. LH POWER SUPPLY, PARTS LIST,(cont'd)

Quantity	Item	Ref. No.	Description	Mfr..Name and/or Part No.
2	50	R110	Resistor, 10K ± 10%, 1/2 w	AB Type EB
X	51	R111	Resistor, same as R110	
1	52	R112	Resistor, 22.5K 5 w, wire-wound	Ohmite Axial
1	53	R113	Resistor, 4.7K ± 10%, 1 w	AB Type GB
1	54	R114	Resistor, 125-ohm, 20 w, wire-wound	Ward Leonard
2	55	R115	Resistor, 3.3K ± 10%, 1 w	AB Type GB
X	56	R116	Resistor, same as R115	
1	57	R117	Resistor, determined at test	
1	58	R118	POT, 5K, 2 w, wire-wound	CTS Type 252
1	59	R119	POT, 2K, 2 w, wire-wound	CTS EW 1298252
1	60	R120	POT, 2K, 1/4 w	CTS Type 45
8	61	R121	Resistor, 0.5 ohm, 5w, wire-wound	IRC Type PW-5
X	62	R122	Resistor, same as R121	
X	63	R123	Resistor, same as R121	
X	64	R124	Resistor, same as R121	
X	65	R125	Resistor, same as R121	
X	66	R126	Resistor, same as R121	
X	67	R127	Resistor, same as R121	
X	68	R128	Resistor, same as R121	
-	69	R129	Resistor, same as R121	
-	70	R130	Resistor, same as R121	
-	71	R131	Resistor, same as R121	
-	72	R132	Resistor, same as R121	

TABLE A-1. LH POWER SUPPLY, PARTS LIST (cont'd)

Quantity	Item	Ref. No.	Description	Mfr. Name and/or Part No.
2	73	R133	Resistor, 22-ohm ± 10%, 1/2 w	AB Type EB
X	74	R134	Resistor, same as R133	
2	75	R135	Resistor, 100-ohm ± 10%, 1/2 w	AB Type EB
X	76	R136	Resistor, same as R135	
1	77	R137	Resistor, 10K ± 10%, 1 w	AB Type GB
1	78	S101	Switch, toggle, S.P.S.T.	Carling 110-B73
2	79	T101	Transformer, rectifier, 8-ampere	Deltron 5507
X	80	T102	Transformer, same as T101	
1	81	T105	Transformer, rectifier, bias	Deltron 5541
1	82	TB101	Terminal board, 7-terminal	Jones 7-141Y
1	83	M101	Meter, 0-10vac	General Electric
1	84	M101	Meter, 0-50vdc	General Electric
1	85	CR109	Diode, Zener, 56v ± 5%	Motorola 50M56Z5