X-671-64-284

TM X-55108

# PERFORMANCE INSTRUMENTATION REPORT FOR SPAEROBEE 300A FLIGHT 6.09 GA


N65 12604
(ACCESSION NUMBER)
42
(PAGES)
TMX55108
(NASA CR OR TMX OR AD NUMBER)
(THRU)
1
(CODE)
31
(CATEGORY)
FACILITY FORM 602

GPO PRICE $

OTS PRICE(S) $

Hard copy (HC) 2.00

Microfiche (MF) .50


OCTOBER 1964


GODDARD SPACE FLIGHT CENTER

GREENBELT, MARYLAND

# INSTRUMENTATION REPORT ON SPAEROBEE 300A

# FLIGHT 6.09 GA

By

L. C. Castagnola

National Aeronautics and Space Administration
Goddard Space Flight Center

## SUMMARY

12604

This report is one of a series issued by the Sounding Rocket Instrumentation Section. Contained is all pertinent engineering data on the development of a performance instrumentation system for Spaerobee 300A, Flight 6.09 GA. Methods employed are discussed in which maximum precision and reliability of the transmitted data is achieved through the use of signal conditioning electronics. All pertinent calibration curves are included.

The intention of this report is to illustrate the function and performance of instrumentation and/or telemeter equipment supplied by the Sounding Rocket Instrumentation Section, and not to present an analysis of either scientific data or performance of the vehicle.

Author

TABLE OF CONTENTS

SUMMARY..... i

TABLE OF CONTENTS..... iii

LIST OF ILLUSTRATIONS..... v

INTRODUCTION..... 1

INSTRUMENTATION..... 1

ASSEMBLY AND INSTALLATION..... 6

Booster..... 6
Aerobee 150A Sustainer..... 6

CALIBRATION OF ACCELEROMETERS..... 15

CONCLUSION..... 25

DISPOSITION OF TELEMETRY DATA..... 26

APPENDIX A..... A-1

## LIST OF ILLUSTRATIONS


| Figure Number | Title | Page |
|---|---|---|
| 1 | Instrumentation Block Diagram | 2 |
| 2 | Temperature Gage Amplifier Schematic Diagram | 4 |
| 3 | Stainless Steel Tube and Temperature Gage Mounted to Booster | 7 |
| 4 | Booster with Head Cap Removed Showing Pressure Gage Installation | 8 |
| 5 | Looking Aft at Booster | 9 |
| 6 | Aft View of Sustainer Showing Tail Can Doors, Fins, and Aft Cabling Connector | 10 |
| 7 | View Through Tail Can Door | 11 |
| 8 | View of Rocket Without Spaerobee | 12 |
| 9 | View Looking Into Sustainer Regulator Section | 13 |
| 10 | View of Instrumentation Extension | 14 |
| 11 | Accelerometer Orientation | 16 |
| 12 | Standard Strain Gage Accelerometer Calibration Record | 17 |
| 13 | Accelerometer and Amplifier Calibration Schematic Diagram | 18 |
| 14 | Frequency Response Curves | 19 |
| 15 | $R_C$ Computation | 20 |
| 16 | Typical 10-Point Resistance Calibration Data | 21 |
| 17 | Accelerometer Dynamic Test Arrangement | 22 |
| 18 | Dynamic Calibration Data | 23 |
| 19 | Linearity Curves | 24 |

LIST OF ILLUSTRATIONS (Continued)


| Figure Number | Title | Page |
|---|---|---|
| A-1 | Pressure Transducer (S/N 12534) Response Curve | A-2 |
| A-2 | Giannini Pressure Transducer Model No. A-1.5/60-20 Response Curve | A-3 |
| A-3 | Temperature Transducer (S/N 38953) Response Curve | A-4 |
| A-4 | Schonstedt Magnetometer (S/N 346), Type RAM-5C Response Curve | A-5 |
| A-5 | Accelerometer Assembly (S/N 1068) Forward X-Axis (S/N 1043) Response Curve | A-6 |
| A-6 | Accelerometer Assembly (S/N 1068) Forward Y-Axis (S/N 1045) Response Curve | A-7 |
| A-7 | Accelerometer Assembly (S/N 1068) Forward Z-Axis (S/N 1039) Response Curve | A-8 |
| A-8 | Accelerometer Assembly (S/N 1030) Aft X-Axis (S/N 1044) Response Curve | A-9 |
| A-9 | Accelerometer Assembly (S/N 1030) Aft Y-Axis (S/N 1046) Response Curve | A-10 |

# PERFORMANCE INSTRUMENTATION REPORT FOR SPAEROBEE 300, FLIGHT 6.09 GA

## INTRODUCTION

Critical appraisal of Aerobee performance by the Sounding Rocket Branch, coupled with the determination (late in 1963) that several booster casings, available at Wallops Station, were of marginal quality, established a need for definitive flight performance information, including: (1) a record of vibration and acceleration forces affecting the vehicle from launch to sustainer burnout, and (2) specific data pertaining to booster case pressure and temperature. This data, together with earlier investigations of in-tower forces (Flights 4.28 NP, 19 June 1963, and 4.59 UI, 10 July 1963), using lateral accelerometers, provided usable data.

Responsibility for providing a suitable data gathering instrumentation and telemetry system was assigned to the Sounding Rocket Instrumentation Section. The task was to be carried out at the earliest practicable time, subject to obtaining clearance to ride "piggy back" with one of the scheduled prime experiments. The original telemetry requirement for Flight 6.09 GA was a five-channel FM/FM system, built by the University of Michigan and contained entirely within the ejected Thermosphere Probe mounted on the Sparrow. A later requirement for two additional channels to recover low altitude data from an ion trap (to be mounted on the Aerobee), required that a separate telemetry system be flown. Since the additional system could be made to contain as many as 18 additional channels, it was decided to fly the performance data as a "piggy back" (non-interference) experiment on Spaerobee Flight 6.09 GA. Final design for the data gathering and telemetry system was completed in December 1963 to meet a tentative firing date of 22 January 1963.

## INSTRUMENTATION

The Instrumentation Block Diagram, Figure 1, shows the equipment selected for this effort.

For acceleration information, two Consolidated Electrodynamics Corporation (CEC) Three-Axis, Strain Gage Accelerometers, Model 4-204-0001, were selected. One was mounted on the forward ring of the sustainer; the other, with only two lateral axes, was installed as close as possible to the vehicle centerline in the sustainer tail can.

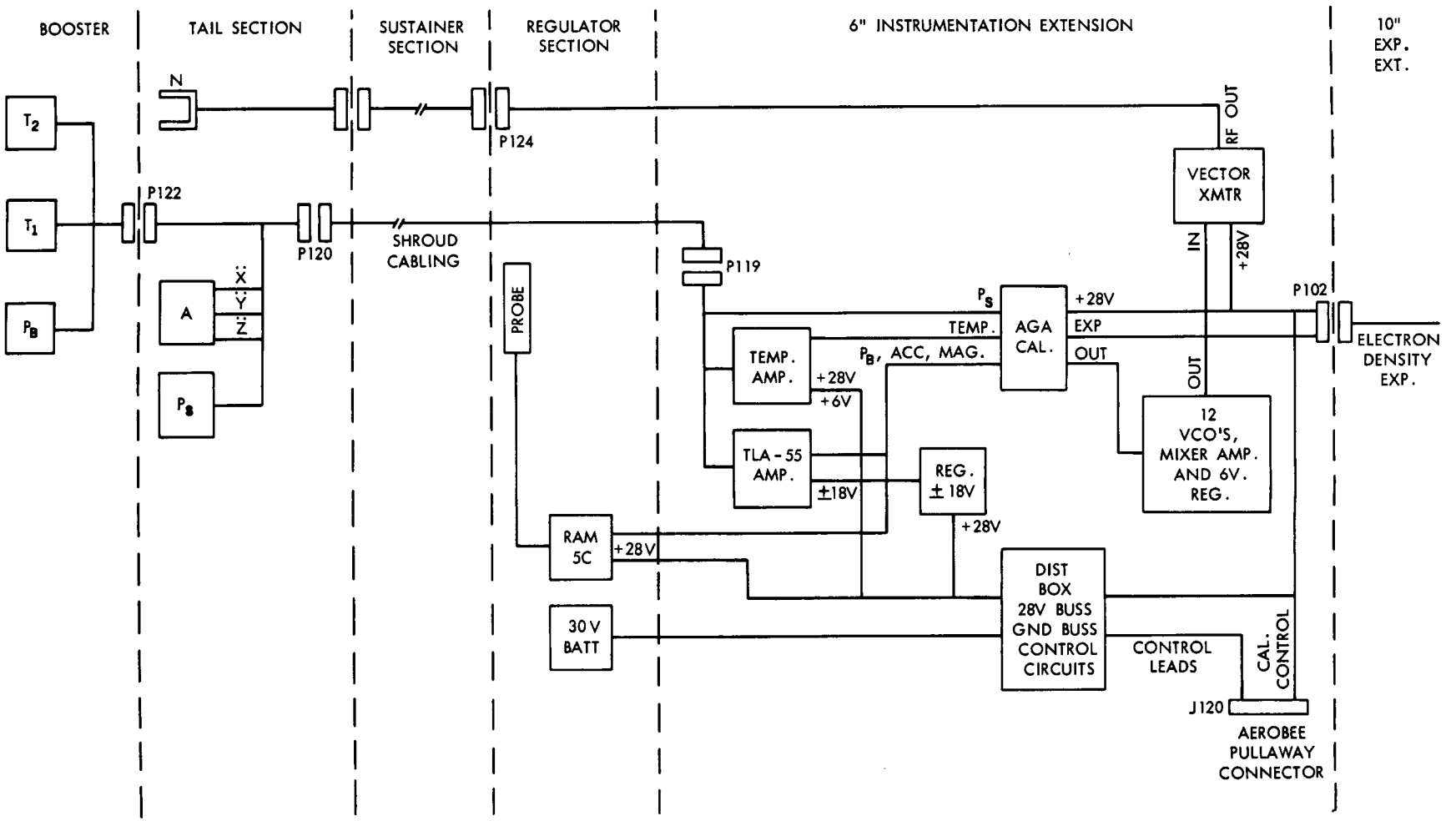


Figure 1. Instrumentation Block Diagram

Spin-rate data, used in developing correction factors for the lateral accelerometer readings, was provided by a Schonstedt Magnetometer, S/N 346, Model RAM-5C. The magnetometer was placed on a special bracket in the sustainer regulator section.

A Giannini Potentiometer Pressure Gage, Model A-1.5/60-20, was mounted in the sustainer tail section and connected to an existing port on the sustainer by a 1/4-inch diameter, corrosion-resistant steel tube.

Two Transonics Temperature Sensors, Model 1375B, were attached to the exterior of the booster case at a point approximately 23 1/2 inches aft of the booster head cap and approximately 5 inches counterclockwise from the centerlines of fins 1 and 4.

A CEC Pressure Gage, Model 4-326-0001, was strapped to the booster head cap and connected by 1/4-inch diameter corrosion-resistant steel tubing and fittings to a port (drilled and tapped for this installation) in the head cap.

Transducer outputs were converted and transmitted by a telemetry system which included the following Vector equipment: A Model TRPT-2W FM/FM Transmitter; six TLA-55 Low-Level Differential Amplifiers; two TV-56A 18-Volt Regulators; one TV-53-5 5-Volt Regulator; one TV-53-6 6-Volt Regulator; one TA-58 Mixer Amplifier; and 12 TS-56A Voltage Controlled Oscillators. Two in-house designed amplifiers (Figure 2) were provided to condition the temperature sensor outputs for compatability with the telemetry. An Aero-Geo Astro Corporation (AGA) Flight Calibrator, Model DKT-7A, and an in-house designed six-channel voltage clipper completed the telemetry complement. All telemetry elements were mounted within a standard Aerobee six-inch extension.

Power supply and controls consisted of 20 Yardney HR-1 batteries mounted in a battery box (GSFC drawing GFZ 12-046), a Potter and Brumfield SL11DF Relay, a Filtor VL26AAK-18A Relay, and a modified Raymond Inertia Switch, Model 1654. The fin-notch telemetry antenna, designed and furnished by New Mexico State University, was mounted on Fin 1 of the Aerobee 150A rocket.

The TLA-55 Low-level Amplifiers, used to condition the performance accelerometer transducers, were known to be somewhat temperature sensitive. For this reason, it was decided to enclose the amplifiers in an insulated case, isolating them from any ambient temperature changes. The wiring of the control relays was designed to give separate operation of the performance instrumentation, allowing for amplifier warm-up without the necessity of RF radiation clearance. All amplifiers were placed in an aluminum-alloy enclosure, with a 1/2-inch thick liner of

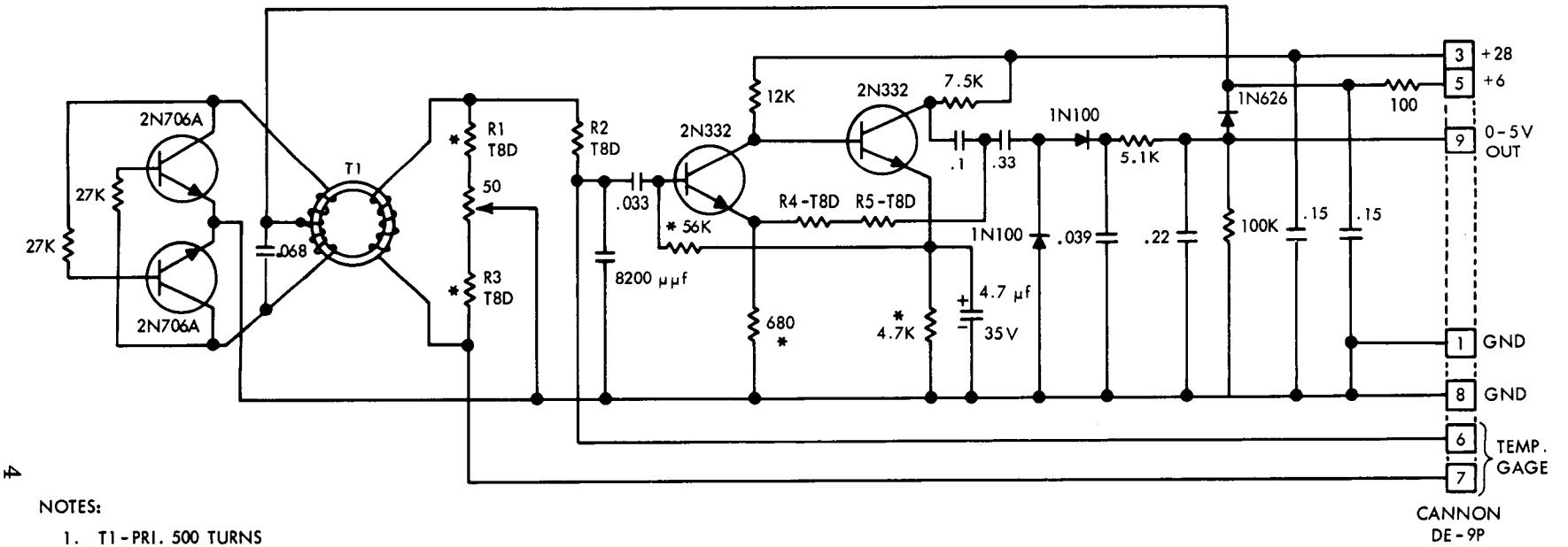


NOTES:

1. T1-PRI. 500 TURNS
   CENTER TAPPED
   SEC. 100 TURNS
   BOTH WINDINGS WITH #36 FORMVAR.
2. R1, R2, R3-
   BRIDGE RESISTORS TO BE DETERMINED ACCORDING TO RESISTANCE RANGE OF TEMPERATURE GAGE.
3. R4, R5-
   FEEDBACK RESISTORS TO BE DETERMINED ACCORDING TO RESISTANCE RANGE OF TEMPERATURE GAGE.
4. ALL RESISTORS ARE ±5%, 1/4-WATT.
5. * DENOTES METAL FILM RESISTORS.

Figure 2. Temperature Gage Amplifier Schematic Diagram

cork and asbestos. A 1/32-inch asbestos divider was placed between individual units. Exit point of the leads was sealed by a cork mastic compound. By this method, the amplifiers reached the operating temperature for which they had been calibrated and since they were enclosed in an insulated medium, there was little temperature change during flight to cause the amplifier drift.

The rf link for data transmission was via a 2-watt Vector, FM/FM transmitter, on 231.4 MCS using the notch antenna. Channel allocations were as follows:

| IRIG CHANNEL | FREQUENCY | DATA |
|---|---|---|
| 18 | 70 KCS | Booster Chamber Pressure - $P_b$ |
| 17 | 52.5 KCS | Forward Z-axis Accelerometer |
| 16 | 40 KCS | Forward X-axis Accelerometer |
| 15 | 30 KCS | Aft X-axis Accelerometer |
| 14 | 22 KCS | Forward Y-axis Accelerometer |
| 13 | 14.5 KCS | Aft Y-axis Accelerometer |
| 12 | 10.5 KCS | Lateral Magnetometer |
| 11 | 7.35 KCS | Sustainer Chamber Pressure - $P_c$ |
| 10 | 5.4 KCS | Booster Temperature - $T_1$ |
| 9 | 3.9 KCS | Ion Trap Experiment |
| 8 | 3.0 KCS | Ion Trap Experiment |
| 7 | 2.3 KCS | *Booster Temperature - $T_2$ |

*$T_2$ - Gage damaged in installation. No spare transducer was available, therefore, data was not flown.

## ASSEMBLY AND INSTALLATION

### BOOSTER

In order to obtain data from the gages affixed to the booster, up to the point of actual separation of the booster from the sustainer, it was necessary to protect the leads from the effect of the burning fuel during the moments between sustainer ignition and booster separation (approximately 2.5 secs).

The temperature sensors were bonded with Sauereisen No. 2276 White Ceramic cement directly to the booster case (as shown in Figure 3). The leads from these units were brought to a pull-away connector on the booster support rail through a corrosion-resistant steel tube, strapped to the booster case.

Location of the pressure gage, directly behind the standard booster blast cone (Figure 4), provided sufficient protection for the unit. The pressure gage leads were carried through one of the tubular struts of the support, passing through a hole drilled at the forward end (Figure 5) to the connector.

### AEROBEE 150A SUSTAINER

The Aerobee 150A sustainer tail section bulkhead was modified to permit mounting of the breakaway connector for the booster (as shown in Figure 6). The aft accelerometer and the sustainer pressure gage were installed within the tail section (as shown in Figure 7).

The New Mexico State University notch antenna for the telemetry system was installed in Fin 1. The antenna lead and instrumentation leads for the gages located on the booster and within the tail section, were led through shroud 1 (Figure 8), to the regulator section of the sustainer, and the six-inch extension.

Bolted to a special bracket within the regulator section were the RAM-5C magnetometer (magnetic aspect sensor) and the battery box (Figure 9), with the 1654 Inertia Switch installed on the opposite side of the bracket, not visible in the illustration. These operations were conducted at Wallops Island since neither the booster nor the sustainer was available for payload integration at GSFC.

The remaining components of the system were installed in the six-inch extension directly forward of the sustainer regulator section, as shown in Figure 10.

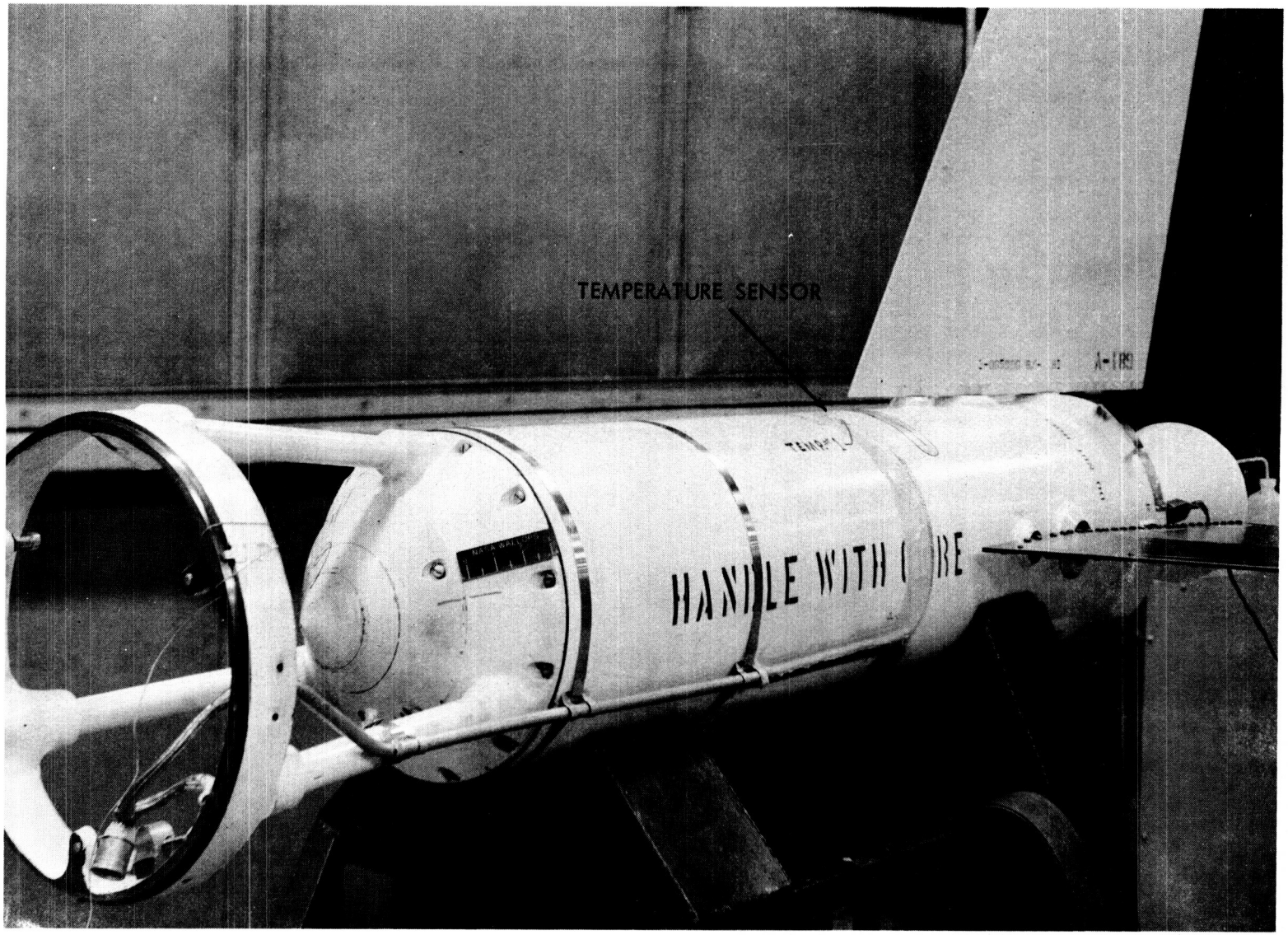


Figure 3. Stainless Steel Tube and Temperature Gage Mounted to Booster

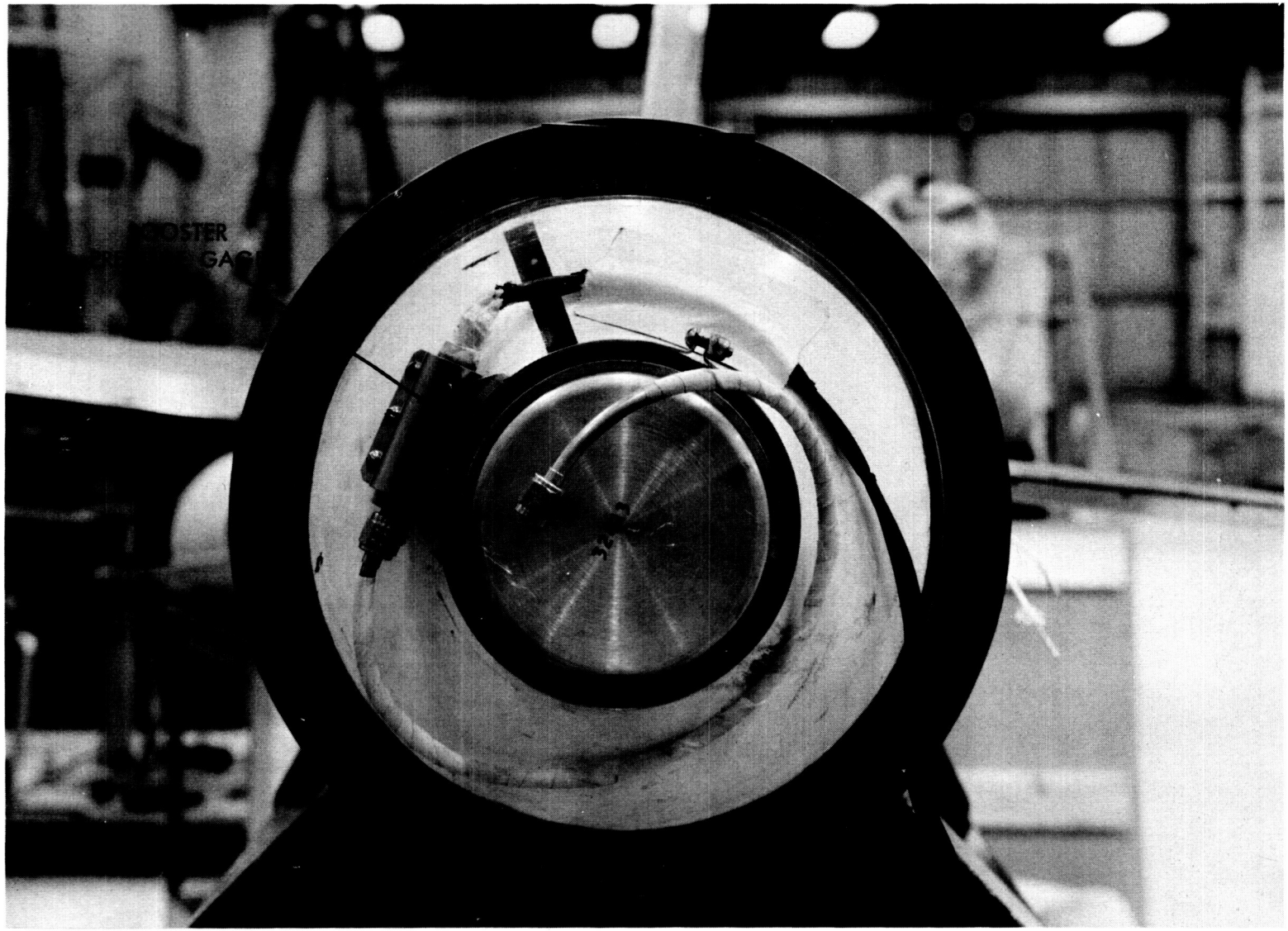

Figure 4. Booster with Head Cap Removed Showing Pressure Gage Installation

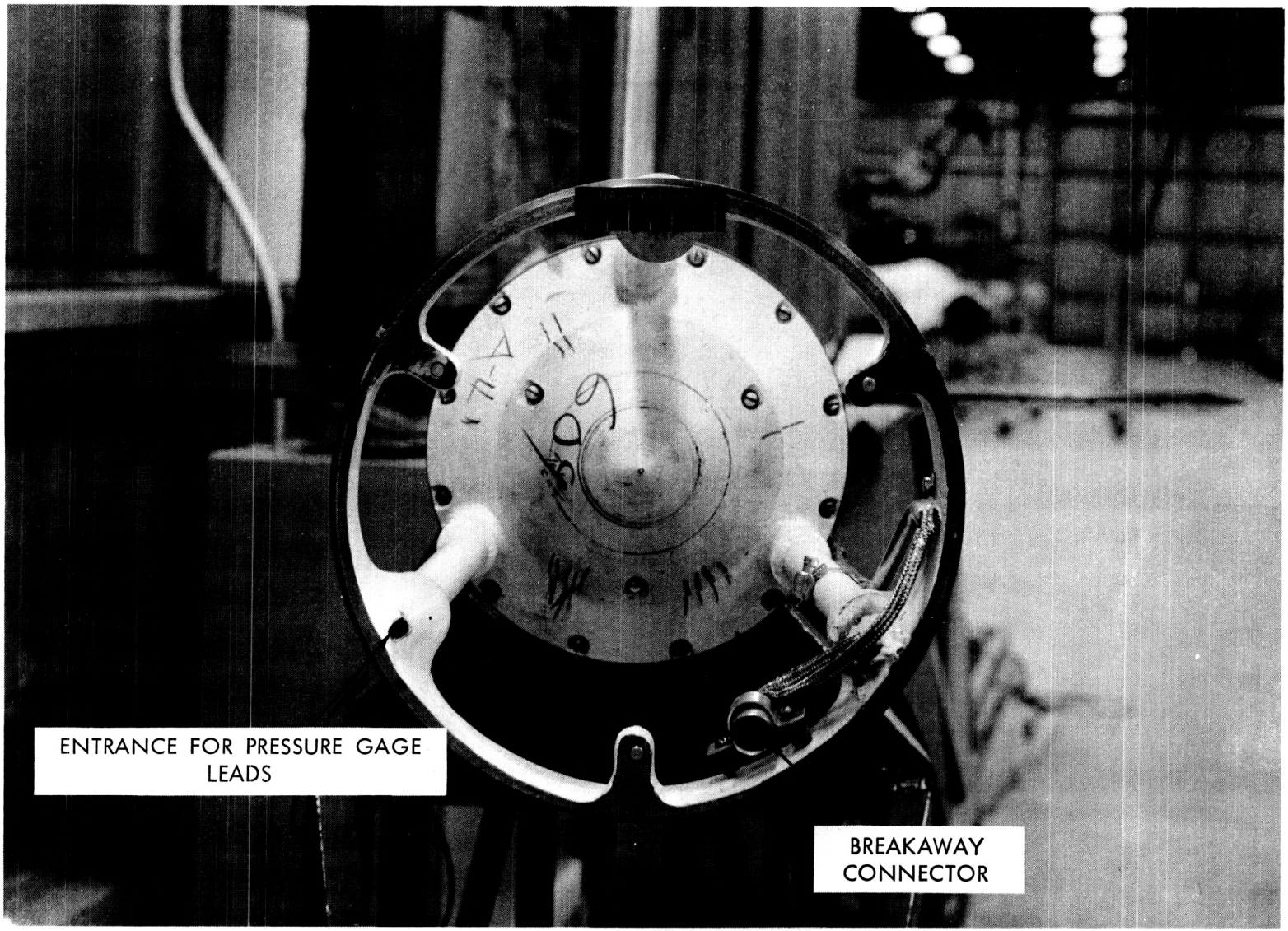


Figure 5. Looking Aft at Booster

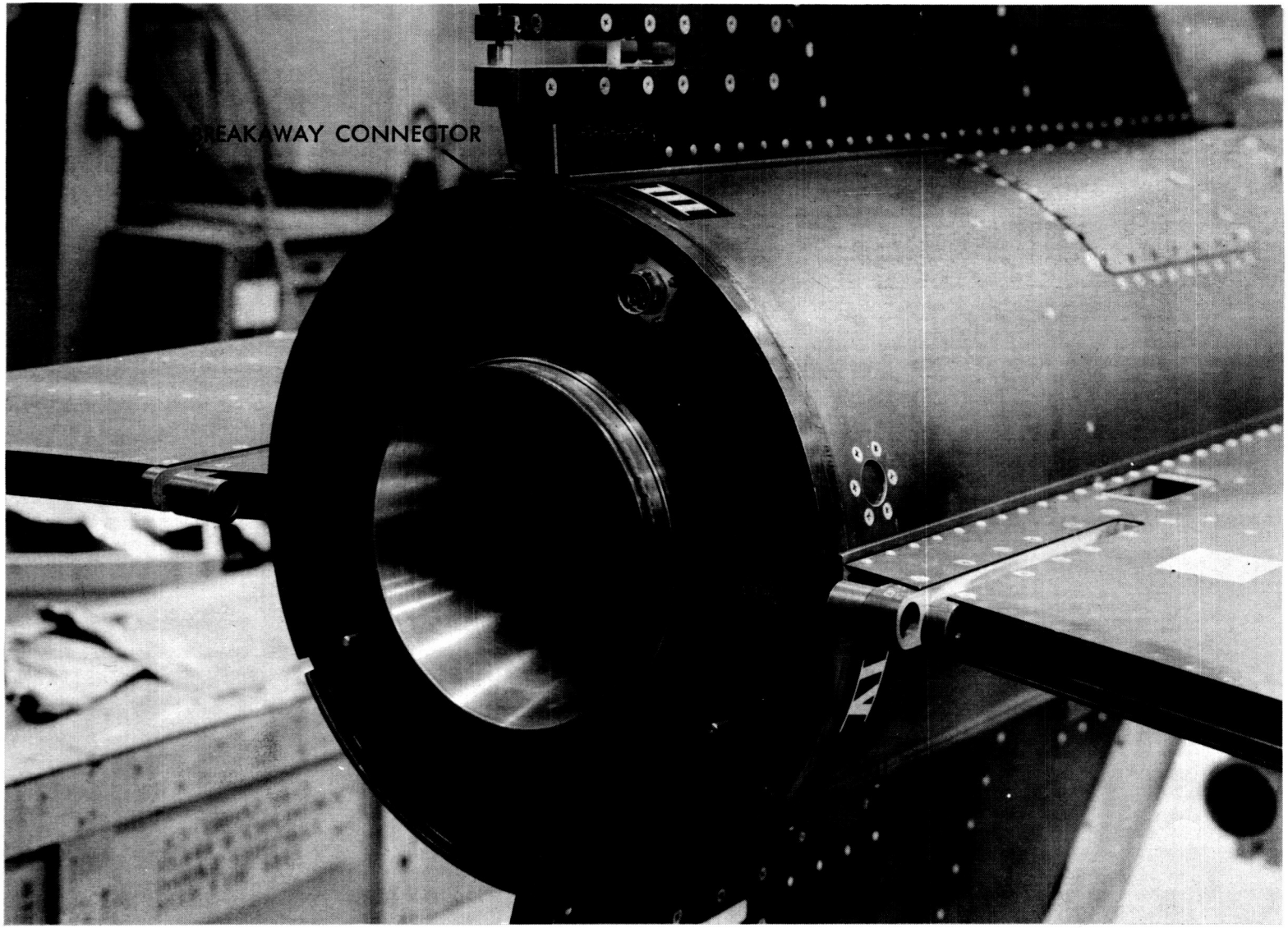


Figure 6. Aft View of Sustainer Showing Tail Can Door, Fins, and Aft Cabling Connector

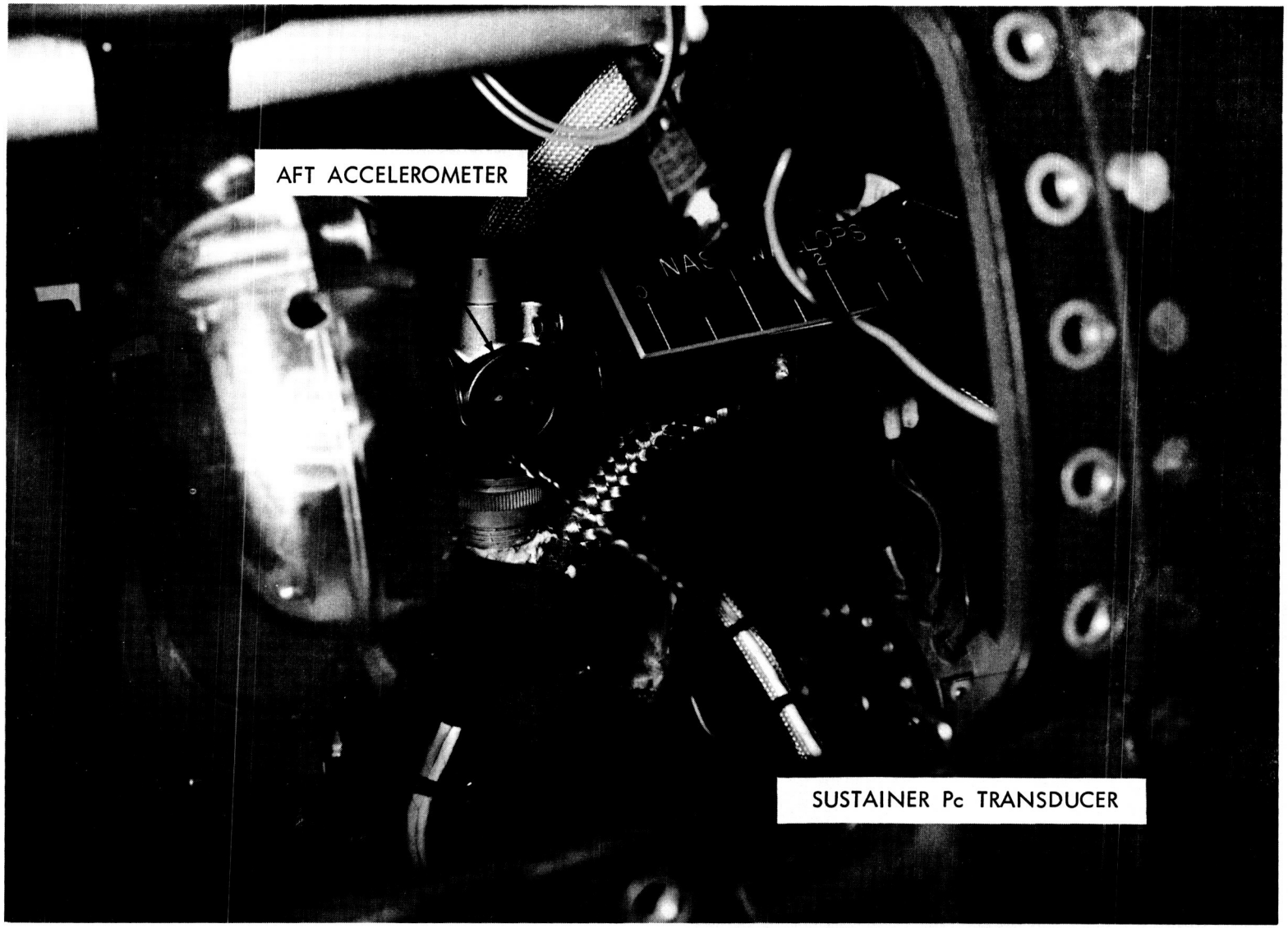


Figure 7. View through Tail Can Door

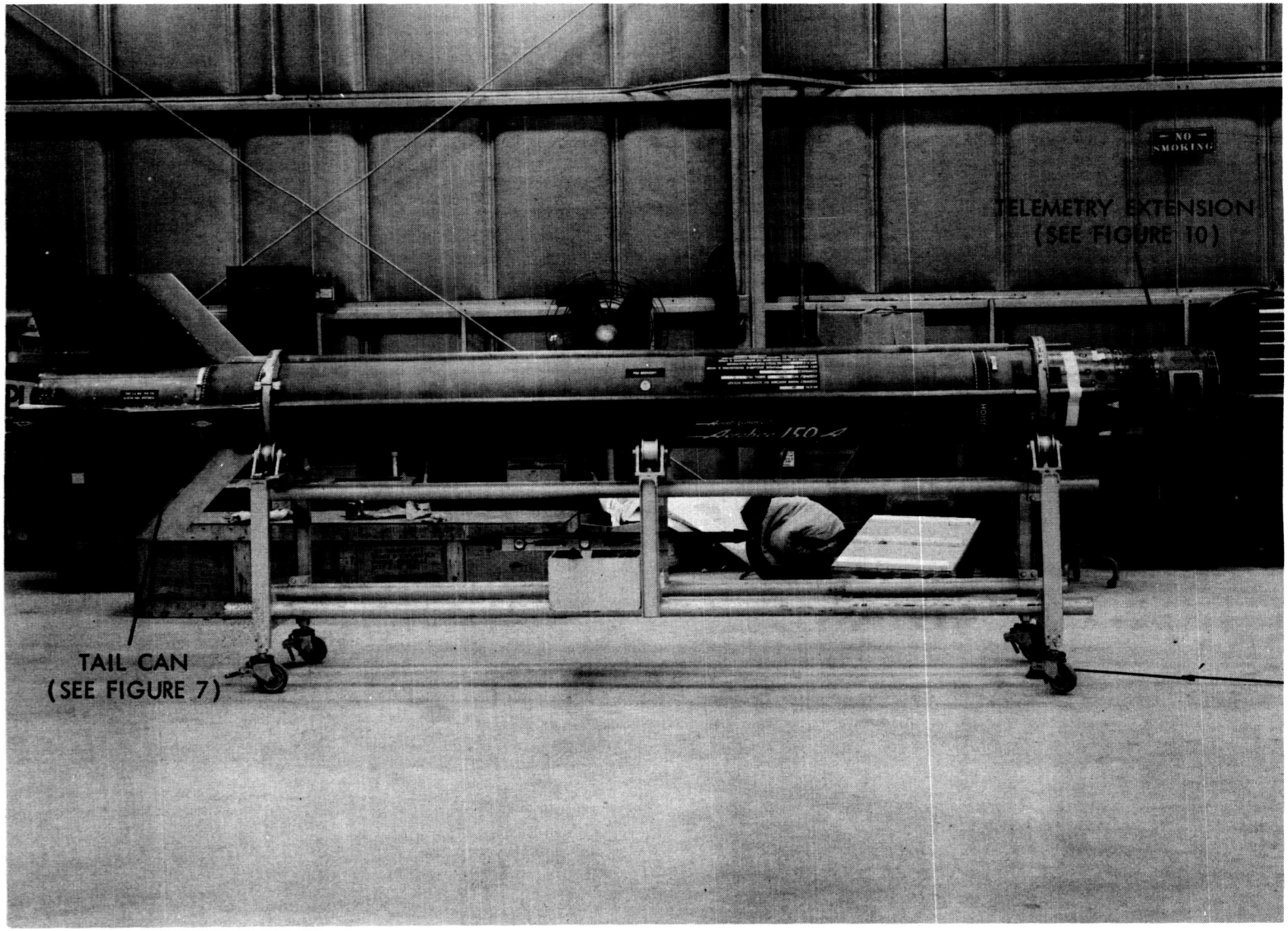


Figure 8. View of Rocket without Spaerobee

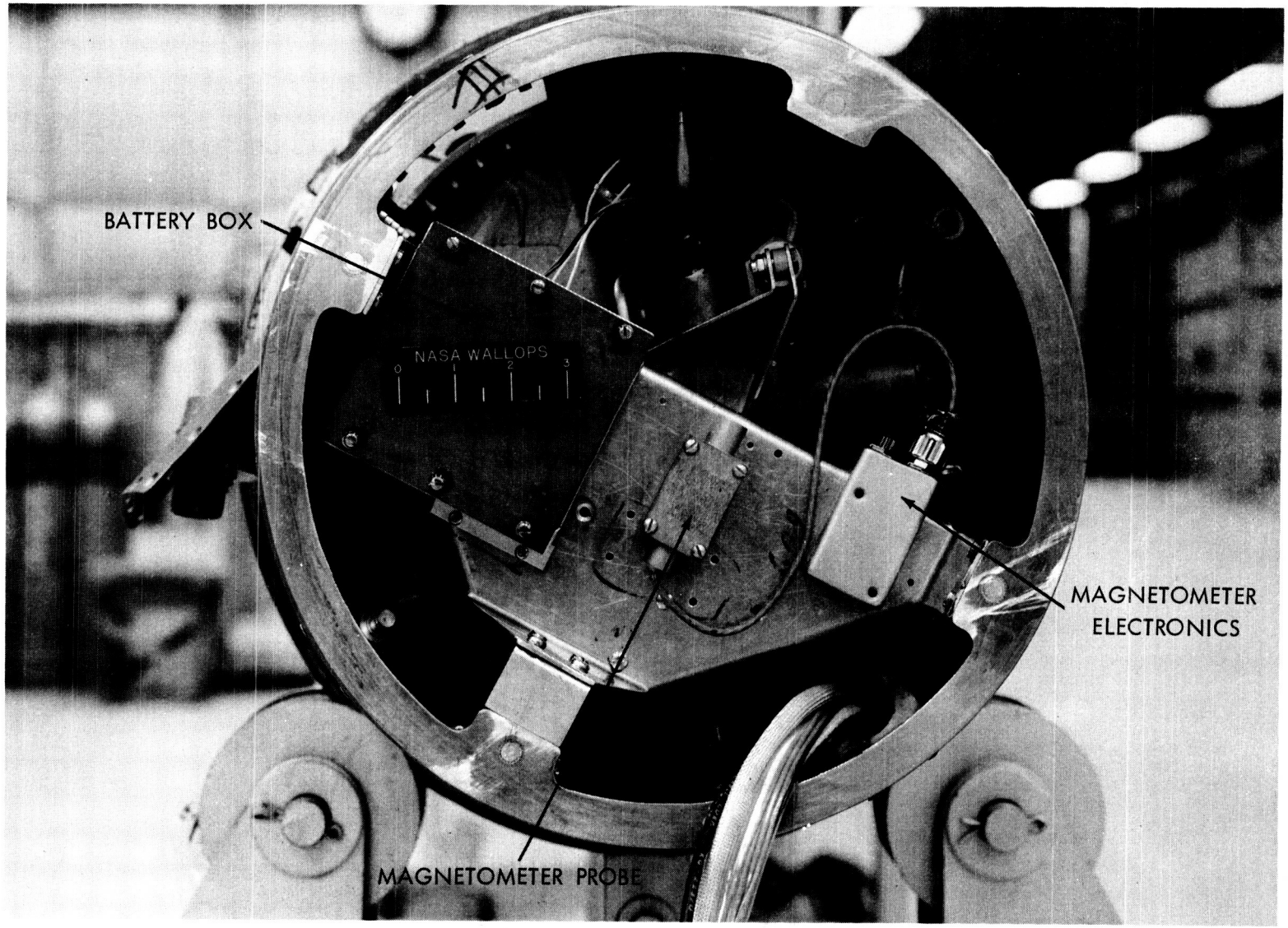


Figure 9. View Looking Into Sustainer Regulator Section

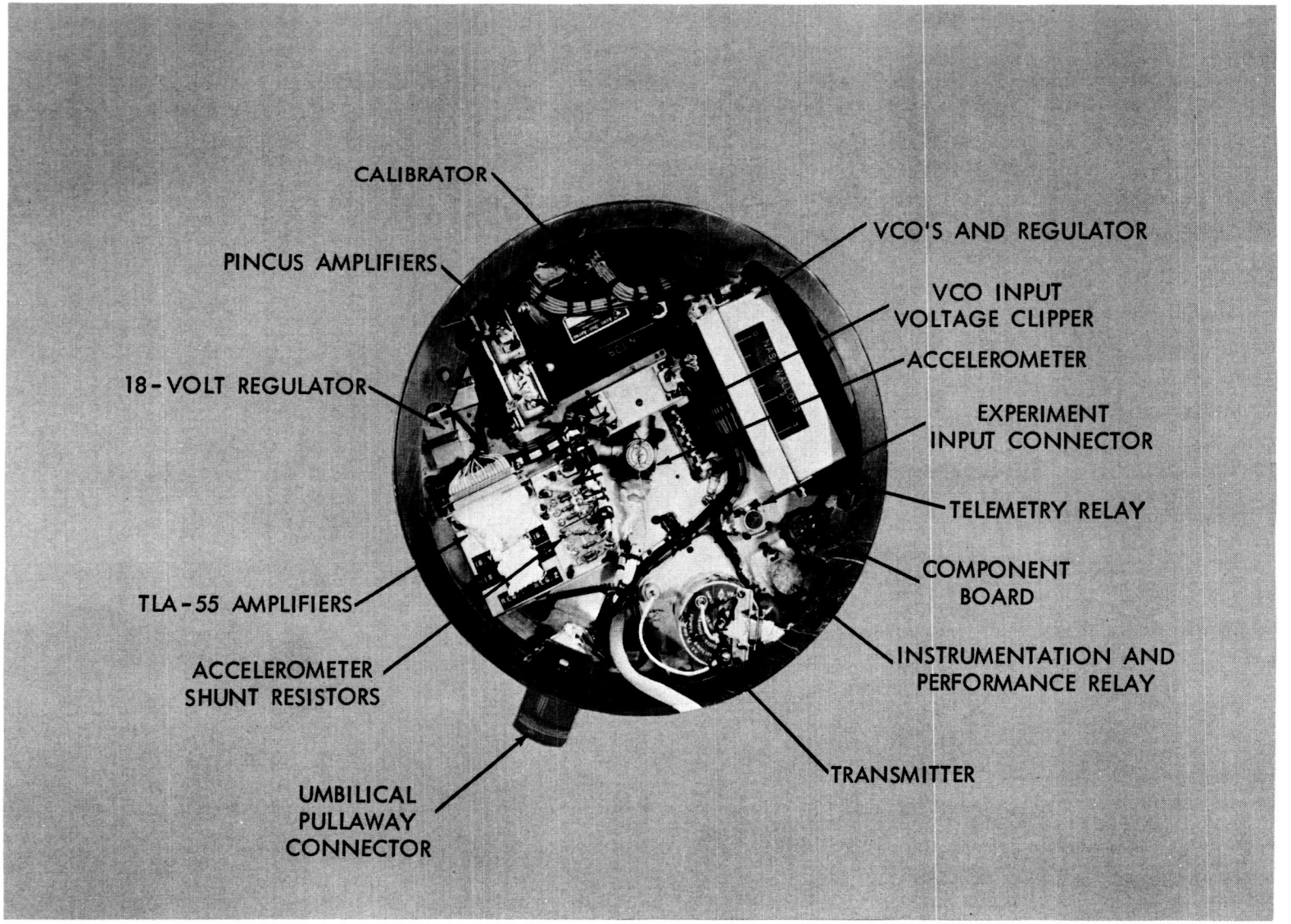


Figure 10. View of Instrumentation Extension

## CALIBRATION OF ACCELEROMETERS

The accelerometer (strain gage, Model No. 4-204-0001) is a balanced bridge circuit. (Accelerometer orientation is shown in Figure 11.) The quiescent (or mid-scale) point of the bridge represents 0g and this is the balanced state of the bridge. The full acceleration range of the bridge, in the case of Flight 6.09 GA, is 10g from plus 5g to minus 5g, and 30g from plus 15g to minus 15g. An acceleration, positive or negative, unbalances the bridge, changing its output voltage ($E_o$). The full range output (FRO) of the plus and minus 5g gage is in the order of 35 mv and the FRO of the plus and minus 15g gage is in the order of 50 mv, (refer to the manufacturer's Calibration Record, Figure 12). In order to meet the 20 mv TLA-55 amplifier input requirement (Figure 13), a shunt resistor ($R_S$) was placed across the output of the gage. The value of $R_S$ was computed by:

$$R_S = \frac{E_o'}{E_p - E_o'} R$$

R being the resistance of the balanced bridge (either R1, R2, R3, or R4, since all values are theoretically, and for practical purposes, equal). Prior to dynamically testing the accelerometers, acceleration was simulated at various g levels so as to produce a static linearity curve with which to compare dynamic curves.

Dynamic linearity and frequency response tests were run with the gage first mounted to the table and then mounted to the tail bracket. The results are shown in Figure 14.

The static simulation was provided by paralleling different values of $R_c$ across either R3 or R4. Prior to computing $R_c$, delta $E_o'$ had to be derived, and was computed by dividing the 20 mv required input by the 10g range of the accelerometer, providing 2 mv/g. $R_c$ can now be computed as follows:

$$R_c = \frac{1}{2} \frac{(2.5)(R)(R_S)}{(R+R_S)(E_o')} - R$$

A typical calculation is shown in Figure 15, deriving $R_S$, delta $E_o'$, and $R_c$. The calculations shown in Figure 16 (10-point resistance calibration static computation), proved the linearity of the bridge. The accelerometers were then vibrated by Test and Evaluation Division, using the arrangement shown in Figure 17, with the units both mounted directly on the vibration table and attached to the flight mounting brackets. Observed readings (Figure 18) were recorded for each condition and compared with the computed values (Figure 19 plots the accelerometer linearity curves of the computed values and both dynamic calibration values).

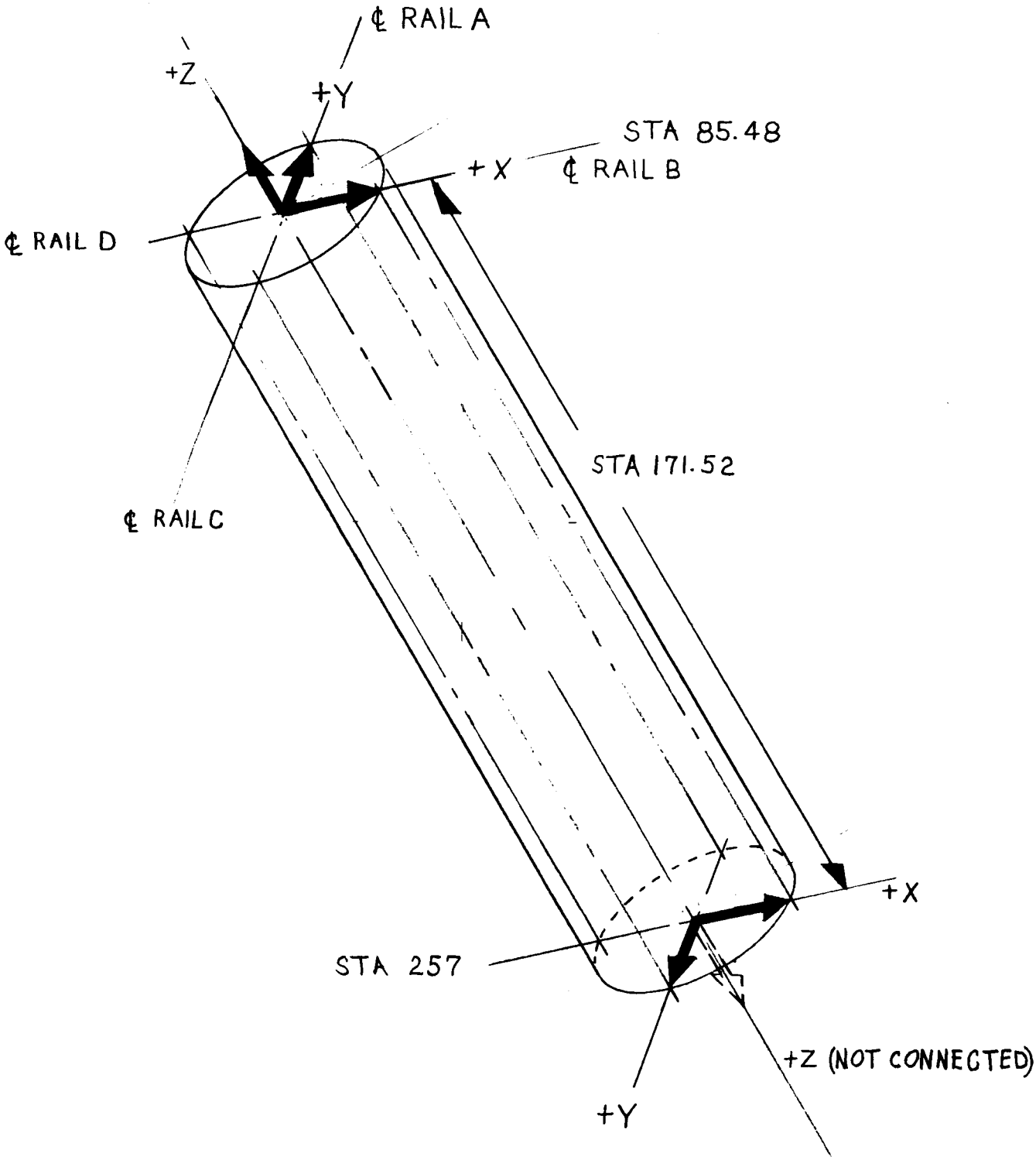


Figure 11. Accelerometer Orientation

**STRAIN GAGE ACCELEROMETER CALIBRATION RECORD**

**Consolidated Electrodynamics Corporation**
TRANSDUCER DIVISION, MONROVIA, CALIFORNIA
*A Subsidiary of* BELL & HOWELL

| | | | |
|---|---|---|---|
| TYPE 4-204-0001 Serial No: 1068 | ACCELERATION RANGE ± 5 G | SERIAL NO. 1043 X Axis | |
| Test Temperature | +77 °F | Compensated Temperature Range | -65 °F to +250 °F |
| FULL RANGE OUTPUT | 33.76 mv. | ZERO SHIFT | -0.008 %FR/°F |
| COMBINED NON-LINEARITY & HYSTERESIS | ± 0.21 %FR | SENSITIVITY SHIFT | +0.002 %FR/°F |

NATURAL FREQUENCY 260 CPS DAMPING 0.72 of CRITICAL

Input Resistance 340 Ω across terminals + J & — M RATED EXCITATION 5.0 VDC

Output Resistance 339 Ω across terminals + G & — H

Date 7-22-63 Signed [signature] Quality Control Engineer

TD139 2M 5-62 TLCO

**STRAIN GAGE ACCELEROMETER CALIBRATION RECORD**

**Consolidated Electrodynamics Corporation**
TRANSDUCER DIVISION, MONROVIA, CALIFORNIA
*A Subsidiary of* BELL & HOWELL

| | | | |
|---|---|---|---|
| TYPE 4-204-0001 Serial No: 1068 | ACCELERATION RANGE ± 5 G | SERIAL NO. 1045 Y Axis | |
| Test Temperature | +77 °F | Compensated Temperature Range | -65 °F to +250 °F |
| FULL RANGE OUTPUT | 34.48 mv. | ZERO SHIFT | -0.005 %FR/°F |
| COMBINED NON-LINEARITY & HYSTERESIS | ± 0.14 %FR | SENSITIVITY SHIFT | -0.004 %FR/°F |

NATURAL FREQUENCY 262 CPS DAMPING 0.66 of CRITICAL

Input Resistance 333 Ω across terminals + K & — L RATED EXCITATION 5.0 VDC

Output Resistance 336 Ω across terminals + B & — A

Date 7-22-63 Signed [signature] Quality Control Engineer

TD139 2M 5-62 TLCO

**STRAIN GAGE ACCELEROMETER CALIBRATION RECORD**

**Consolidated Electrodynamics Corporation**
TRANSDUCER DIVISION, MONROVIA, CALIFORNIA
*A Subsidiary of* BELL & HOWELL

| | | | |
|---|---|---|---|
| TYPE 4-204-0001 Serial No: 1068 | ACCELERATION RANGE ±15 G | SERIAL NO. 1039 Z Axis | |
| Test Temperature | +77 °F | Compensated Temperature Range | -65 °F to +250 °F |
| FULL RANGE OUTPUT | 49.52 mv. | ZERO SHIFT | +0.002 %FR/°F |
| COMBINED NON-LINEARITY & HYSTERESIS | ± 0.10 %FR | SENSITIVITY SHIFT | +0.002 %FR/°F |

NATURAL FREQUENCY 470 CPS DAMPING 0.66 of CRITICAL

Input Resistance 331 Ω across terminals + F & — E RATED EXCITATION 5.0 VDC

Output Resistance 332 Ω across terminals + C & — D

Date 7-22-63 Signed [signature] Quality Control Engineer

Figure 12. Standard Strain Gage Accelerometer Calibration Record

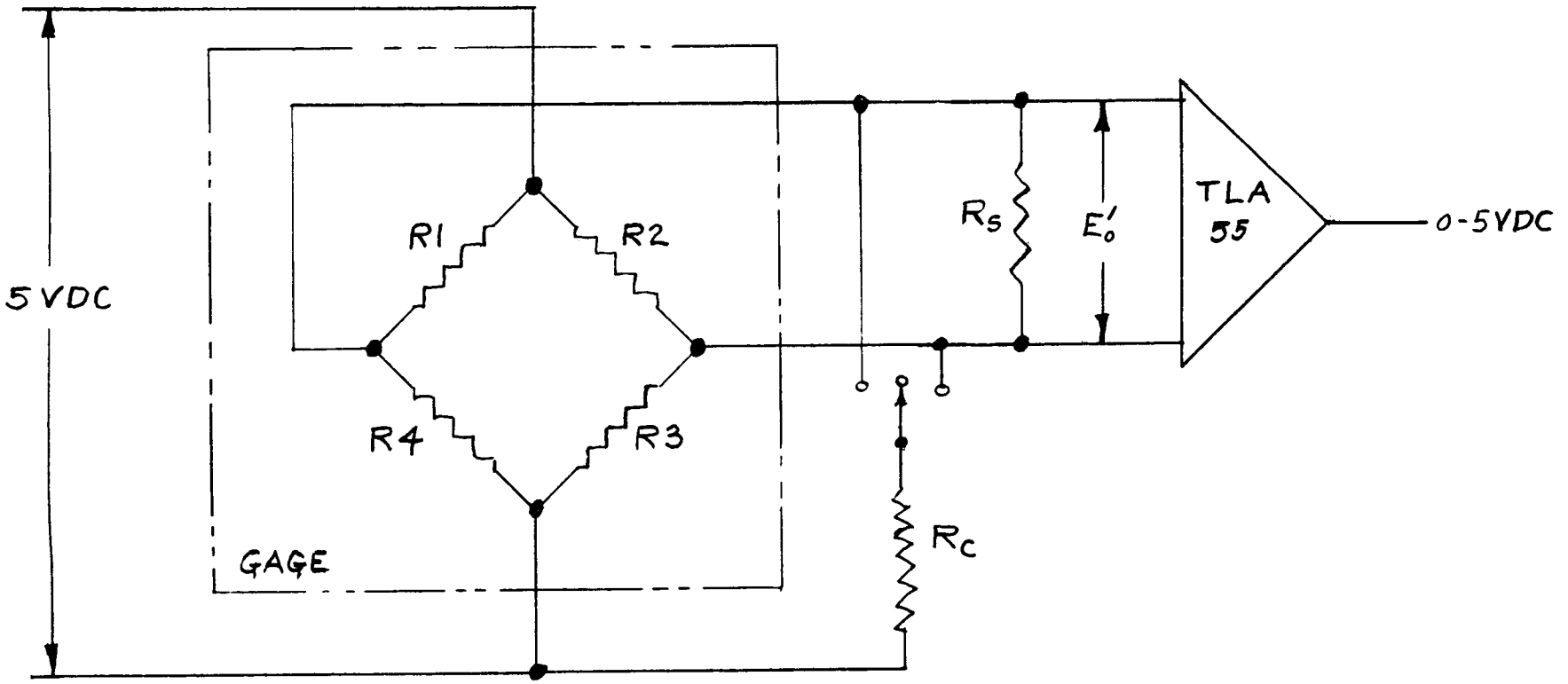


Figure 13. Accelerometer and Amplifier Calibration Schematic Diagram

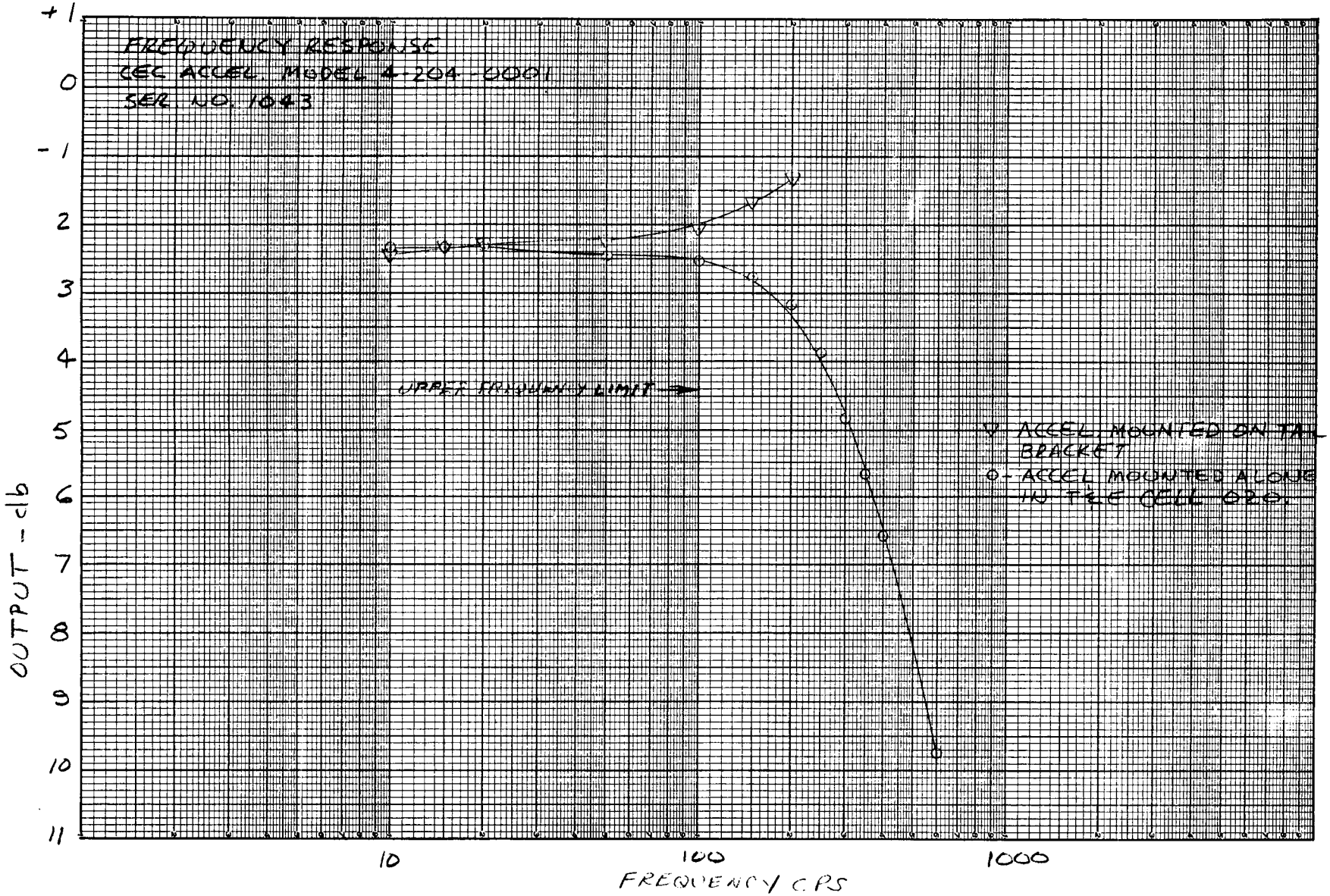


Figure 14. Frequency Response Curves

(1) $$Rs = \left(\frac{E_o'}{E_o - E_o'}\right) R$$

$$Rs = \left(\frac{.02}{.013}\right) 340 \text{ ohms}$$

$$Rs = 493 \text{ ohms}$$

(2) $E_o$ = Gage Output Full Range = 33.76 mv

$E_o'$ = Shunted Gage Output = 20 mv

$$\Delta E_o' = \frac{20 \text{ mv}}{106} = 2 \text{ mv}/6 = .002 \text{ v}/6$$

(3) $$Rc = \frac{1}{2}\left[\frac{(2.5)(R)(Rs)}{(R+Rs)(\Delta E_o')} - R\right]$$

$$Rc = \frac{1}{2}\left[\frac{(2.5)(340)(493)}{(833)(.002)} - 340\right]$$

$$Rc = \frac{1}{2}\left[\frac{419050}{1.666} - 340\right]$$

$$Rc = 125.8 \text{ K ohms}$$

Figure 15. $R_c$ Computation

| "g" | Rc(K) ohms | e(mv) | $\Delta e$(mv) | $E_o'$(v) |
|---|---|---|---|---|
| -5 | 25.02 | -10.66 | 2.27 | -0.05 |
| -4 | 31.317 | - 8.39 | 2.19 | +0.43 |
| -3 | 41.813 | - 6.2 | 2.1 | +0.98 |
| -2 | 62.805 | - 4.1 | 2.2 | +1.49 |
| -1 | 125.78 | - 1.9 | 2.1 | +2.01 |
| 0 | $\infty$ | + 0.2 | -- | +2.55 |
| +1 | 125.78 | + 2.2 | 2.0 | +3.08 |
| +2 | 62.805 | + 4.3 | 2.1 | +3.59 |
| +3 | 41.813 | + 6.3 | 2.0 | +4.11 |
| +4 | 31.317 | + 8.39 | 2.09 | +4.62 |
| +5 | 25.02 | +10.89 | 2.5 | +5.13 |

Figure 16. Typical 10-Point Resistance Calibration Data

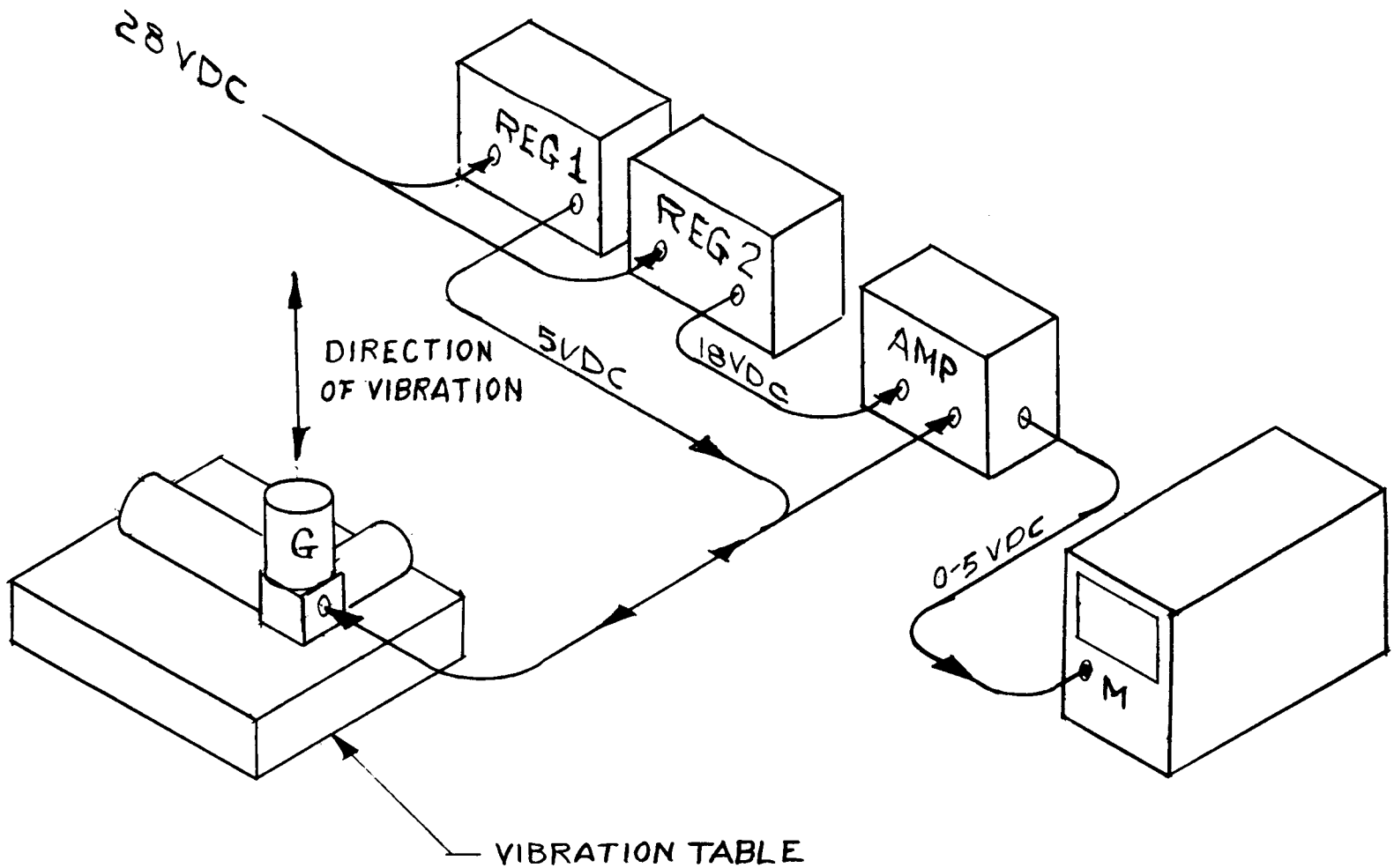


Figure 17. Accelerometer Dynamic Test Arrangement

Using fixed frequency of 100 cps with gage mounted directly to table -

| Input Peak G | Volts Rms |
|---|---|
| 1 | 0.56 |
| 2 | 1.11 |
| 3 | 1.68 |
| 4 | 2.24 |

Using Fixed Input Peak of 1g

| Frequency | Volts Rms |
|---|---|
| 10 | 0.58 |
| 15 | 0.58 |
| 20 | 0.58 |
| 50 | 0.57 |
| 100 | 0.56 |
| 150 | 0.53 |
| 200 | 0.48 |
| 250 | 0.41 |
| 300 | 0.33 |
| 350 | 0.27 |
| 400 | 0.22 |
| 450 | 0.176 |
| 500 | 0.148 |
| 550 | 0.124 |
| 600 | 0.106 |
| 650 | 0.093 |
| 700 | 0.081 |
| 750 | 0.070 |
| 800 | 0.062 |
| 850 | 0.056 |
| 900 | 0.050 |
| 950 | 0.045 |
| 1000 | 0.041 |
| 1500 | 0.021 |

Figure 18. Dynamic Calibration Data

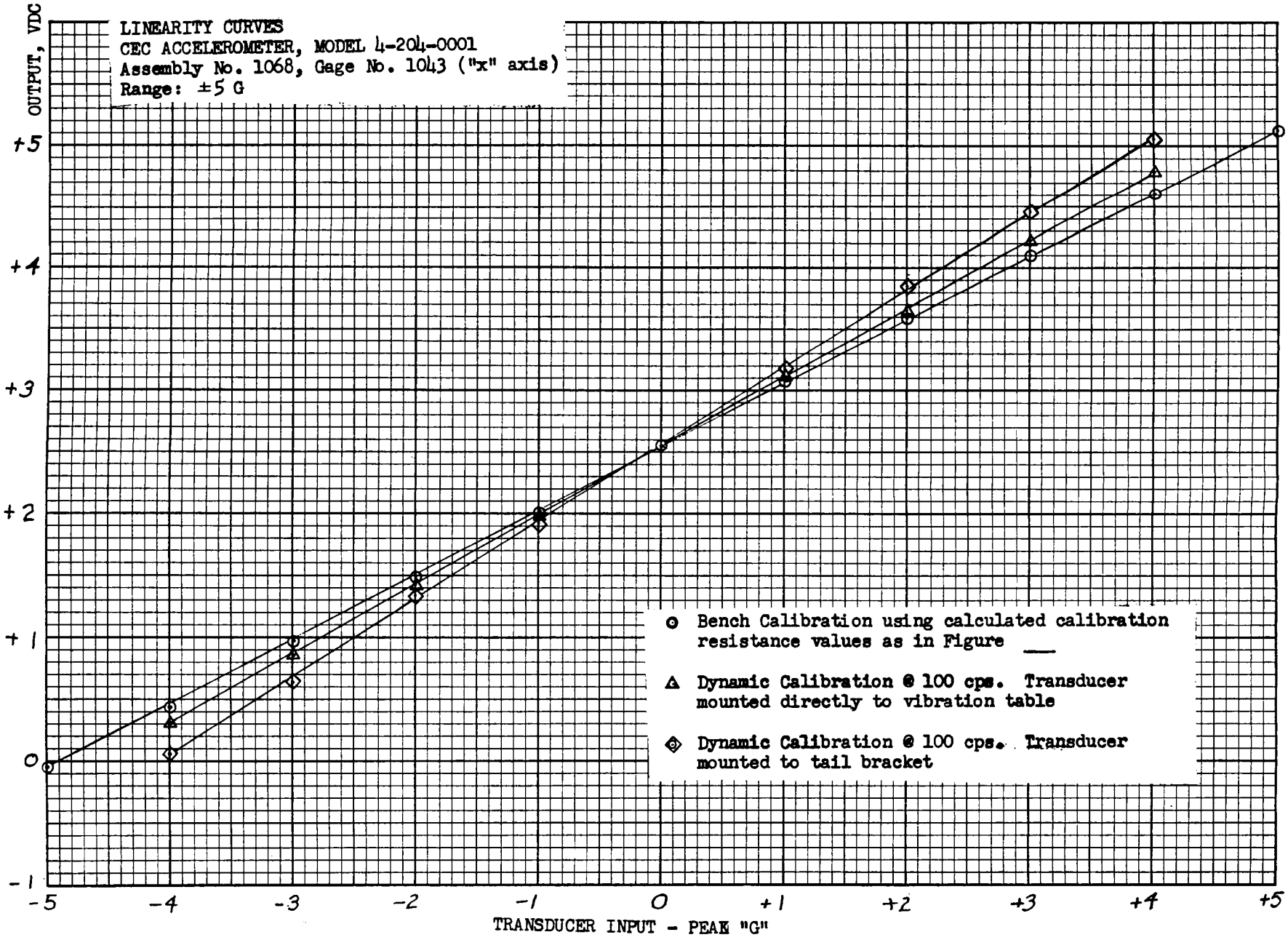


Figure 19. Linearity Curves

The axis perpendicular to the direction of vibration was monitored during the test sequence and exhibited only negligible cross-axis sensitivity, except during the course of the first bracket-mounted run, when the amplitude of the cross-axis response approached that of the axis under test. Investigation showed that the mounting bracket was resonating within the critical measurement range of 0-100 cps. The table-mounted and bracket-mounted responses were further compared (Figure 19) and, from this comparison, it was found that the resonant frequency of the tail mounting bracket fell within the 100 cps range. Reinforcements were welded to the legs of the bracket to provide greater stiffness. Cross-axis tests were resumed and this addition proved adequate to permit completion of the testing program. Tests showed that there were errors as great as 2% between the static and final configuration calibration data in the worst case. This compares favorably with overall accuracy of the vibration table, which is quoted at 4%.

## CONCLUSION

Spaerobee Flight 6.09 GA was fired from Wallops Island on 29 January 1964 at 0309Z. Rocket performance was good, although the peak payload altitude was lower than predicted. Telemetry signals were good and were received for 551 seconds from the payload and 420 seconds from the Aerobee sustainer. Booster temperatures were not obtained due to responsive time lag, and then shorting of the sensing device. Booster pressure during flight was obtained and was in the expected range. Accelerometer data for all three axes were obtained and is still being evaluated. Launch time was such that the vehicle did not pass through altitudes in which the repeller grid ion trap experiment could measure meaningful currents.

A major objective in the mechanical and electrical integration program is early detection and correction of errors and discrepancies in experiments or instrumentation. In this instance, the objective was not fully realized. The incidents and problems described, clearly demonstrate that the effectiveness of the integration program is heavily dependent on the degree to which it is possible to duplicate the mechanical and electrical characteristics of the vehicle and payload.

The flight was successful and, from the standpoint of the specific responsibilities of the Sounding Rocket Instrumentation Section, only the booster case temperature fell below the desired levels in quality and quantity.

## DISPOSITION OF TELEMETRY DATA

One copy of the magnetic tape was given to the University of Michigan and one was retained for the Sounding Rocket Instrumentation Section library. In addition, real time and playback oscillograph records of the experimental data were disseminated to the University of Michigan. The performance data was reproduced on oscillograph recorders according to requested formats and distributed to the Flight Performance and Vehicle Sections of the Sounding Rocket Branch.

# APPENDIX A

This section includes calibration curves for the temperature, pressure, magnetometer, and accelerometer transducers.

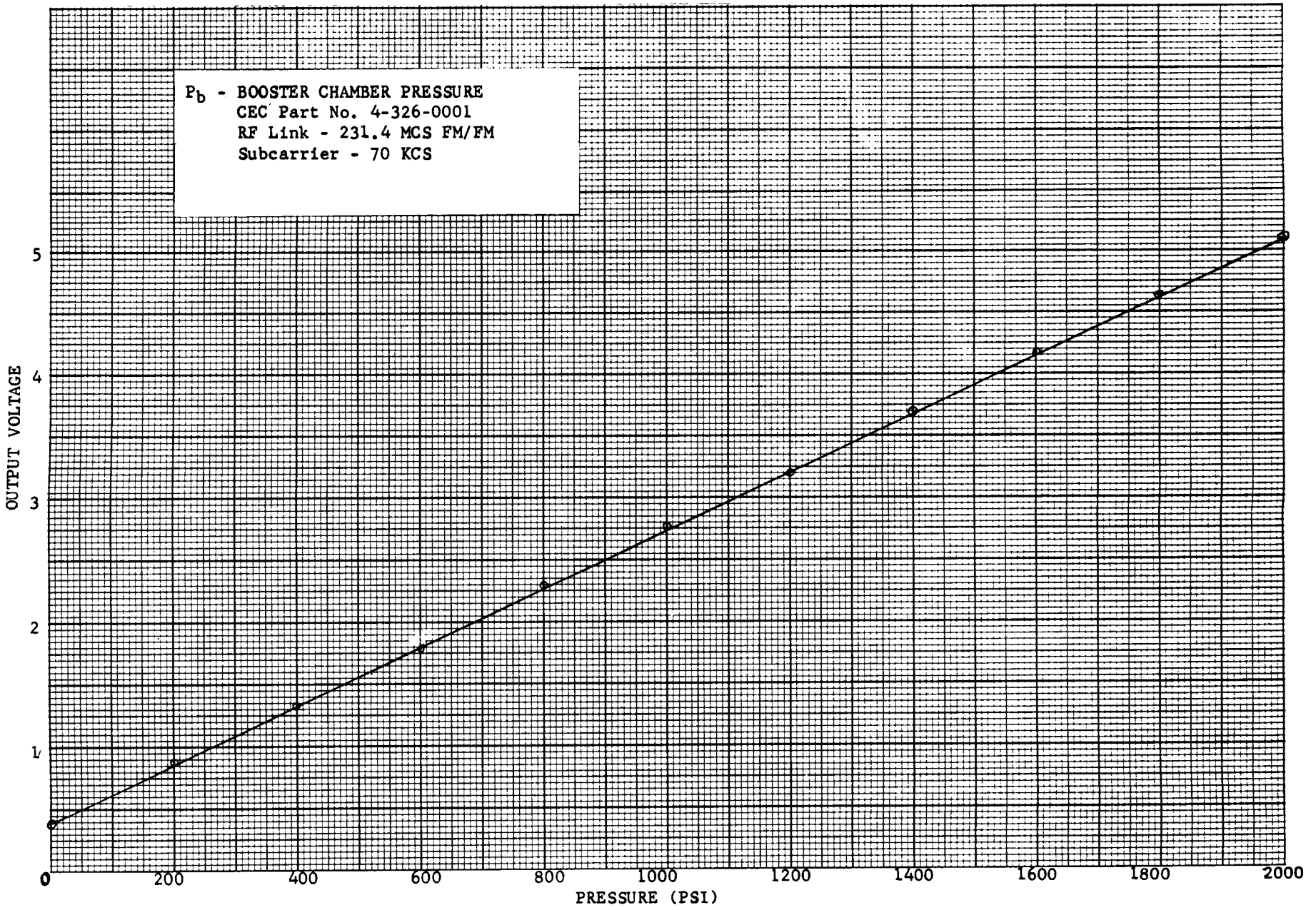


**Figure A-1. Pressure Transducer (S/N 12534) Response Curve**

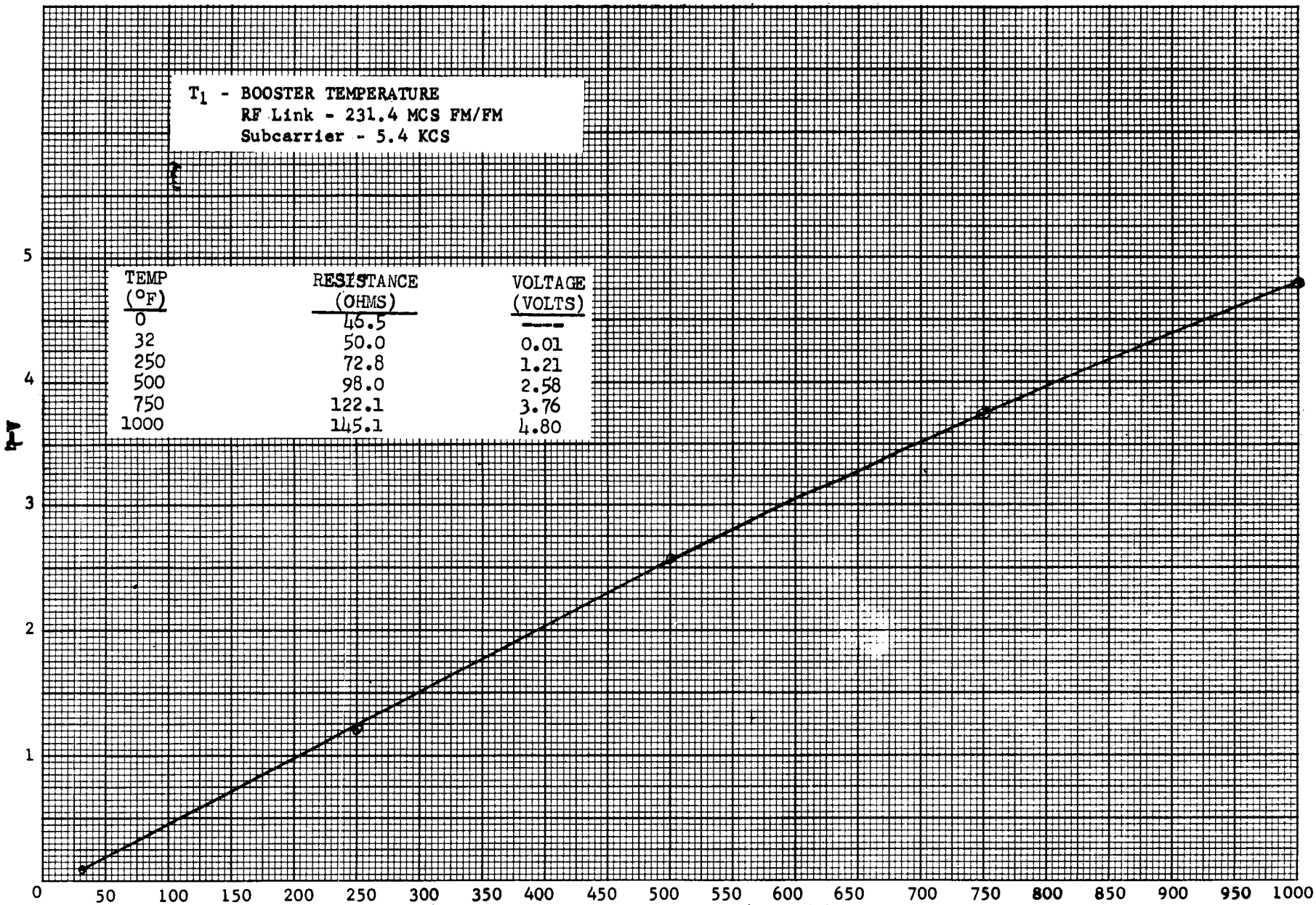


Figure A-3. Temperature Transducer (S/N 38953) Response Curve

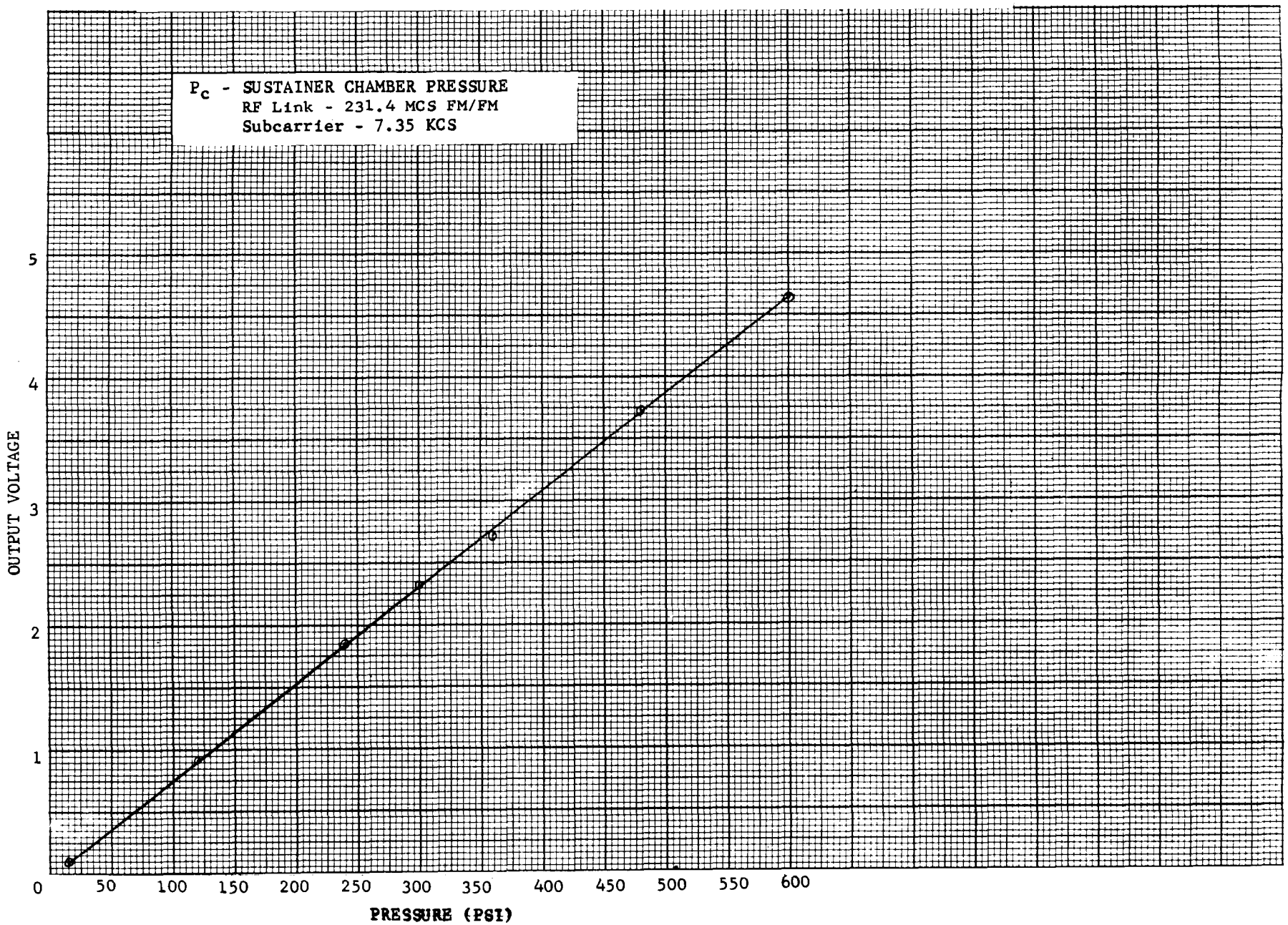
$P_c$ - SUSTAINER CHAMBER PRESSURE
RF Link - 231.4 MCS FM/FM
Subcarrier - 7.35 KCS
OUTPUT VOLTAGE
0
1
2
3
4
5
50
100
150
200
250
300
350
400
450
500
550
600
PRESSURE (PSI)

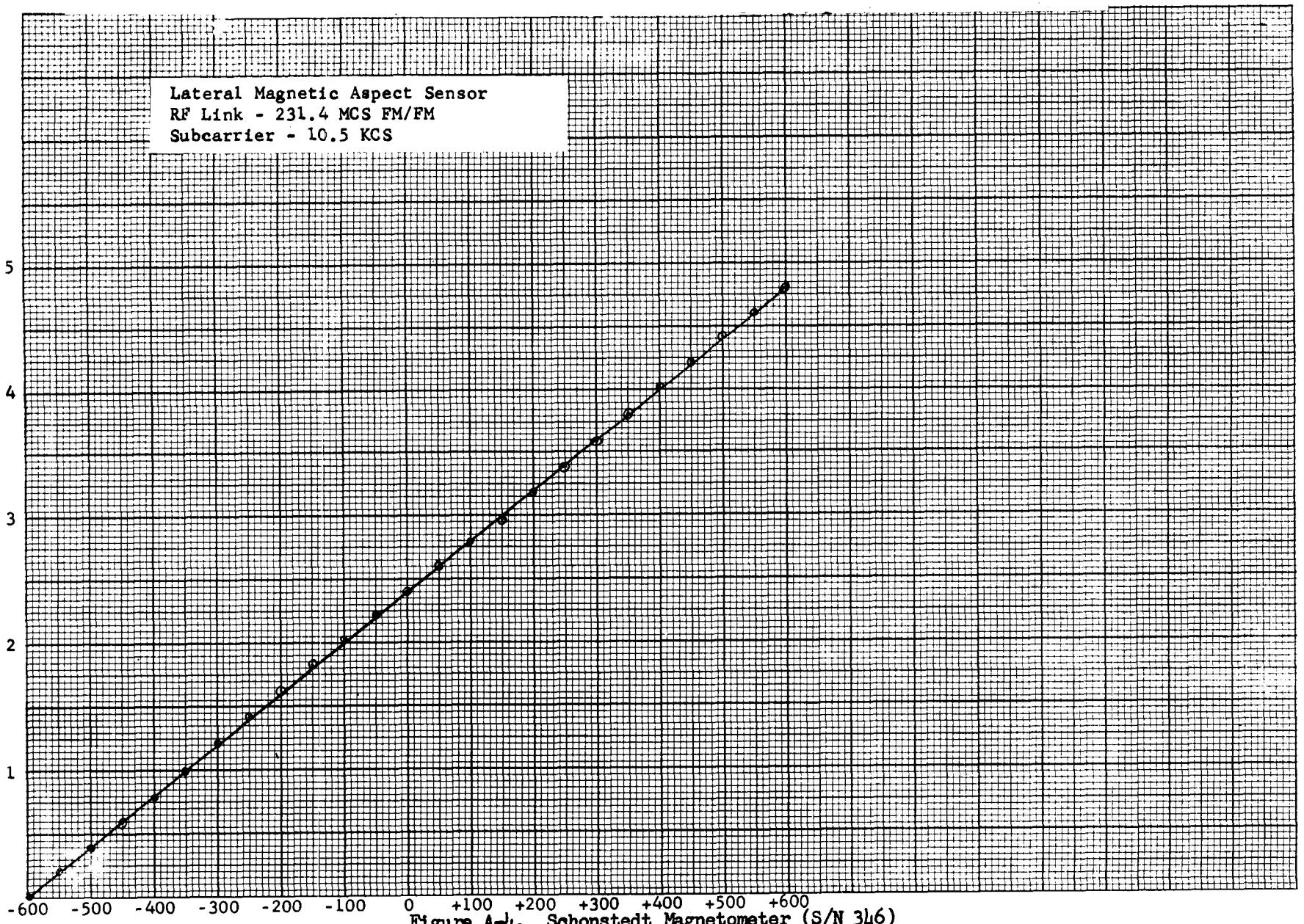


Figure A-4. Schonstedt Magnetometer (S/N 346)
Type RAM-5C Response Curve

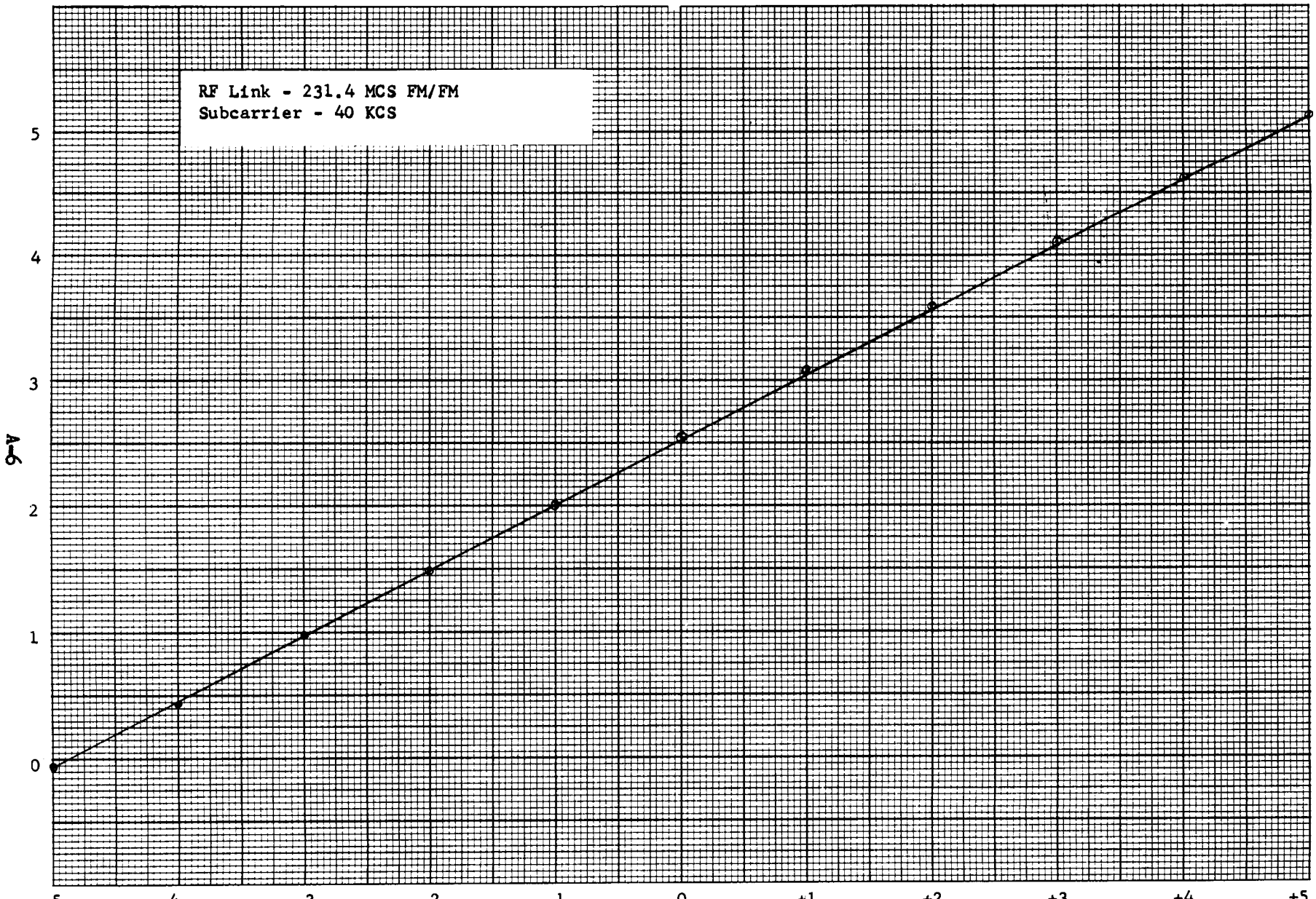


Figure A-5. Accelerometer Assembly (S/N 1068) Forward X-Axis (S/N 1043) Response Curve

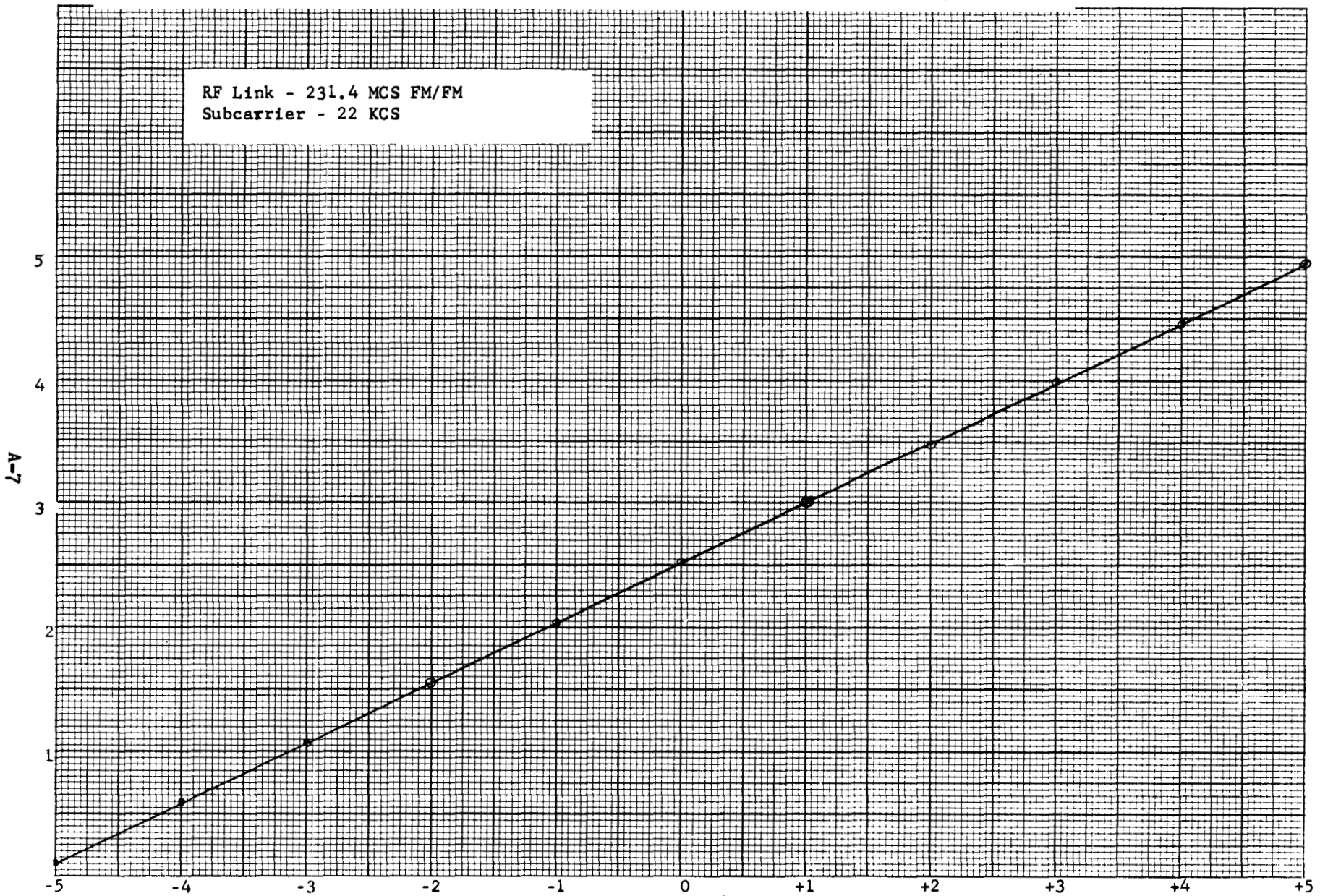


Figure A-6. Accelerometer Assembly (S/N 1068) Forward Y-Axis (S/N 1045) Response Curve

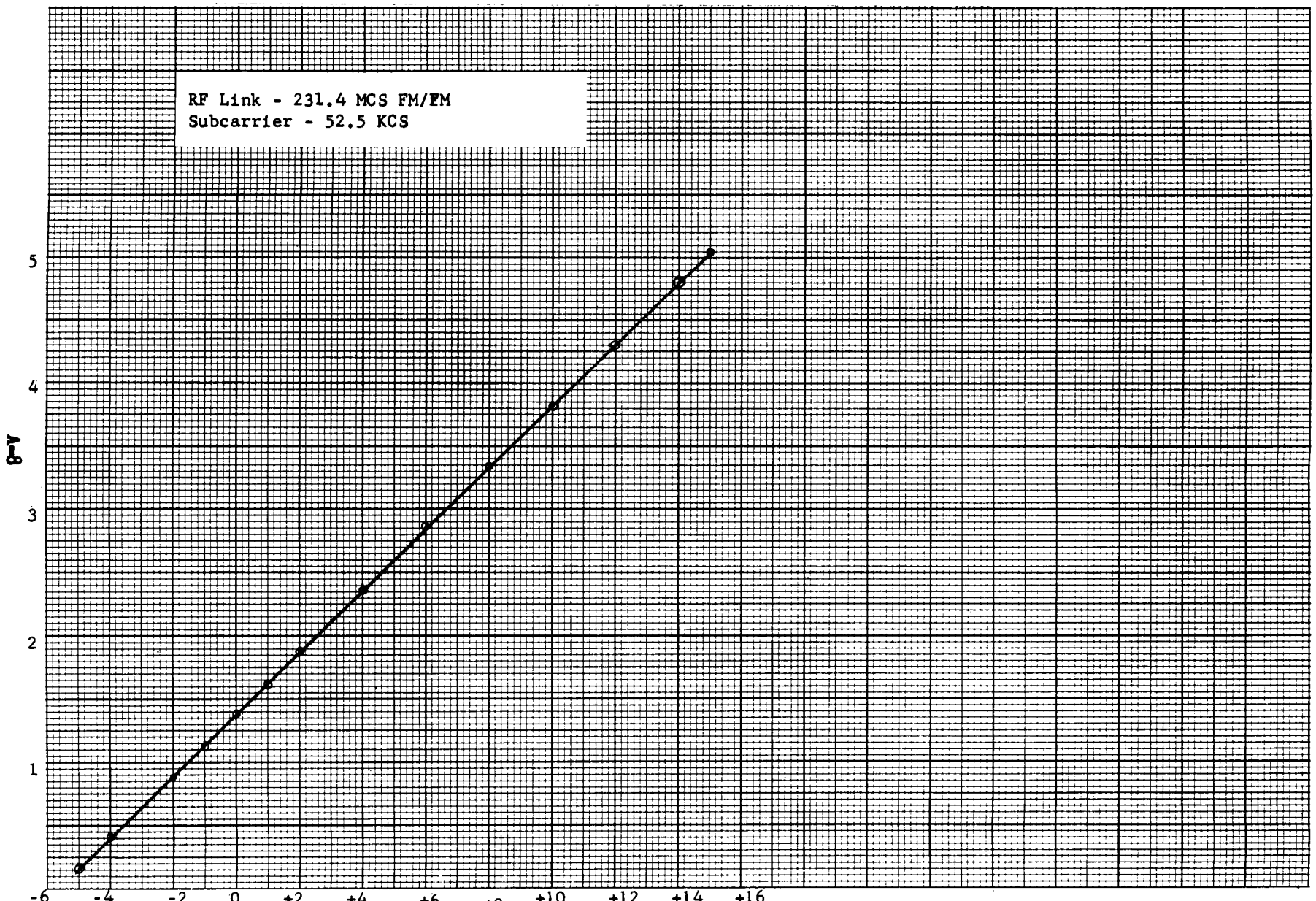


Figure A-7. Accelerometer Assembly (S/N 1068) Forward Z-Axis (S/N 1039) Response Curve

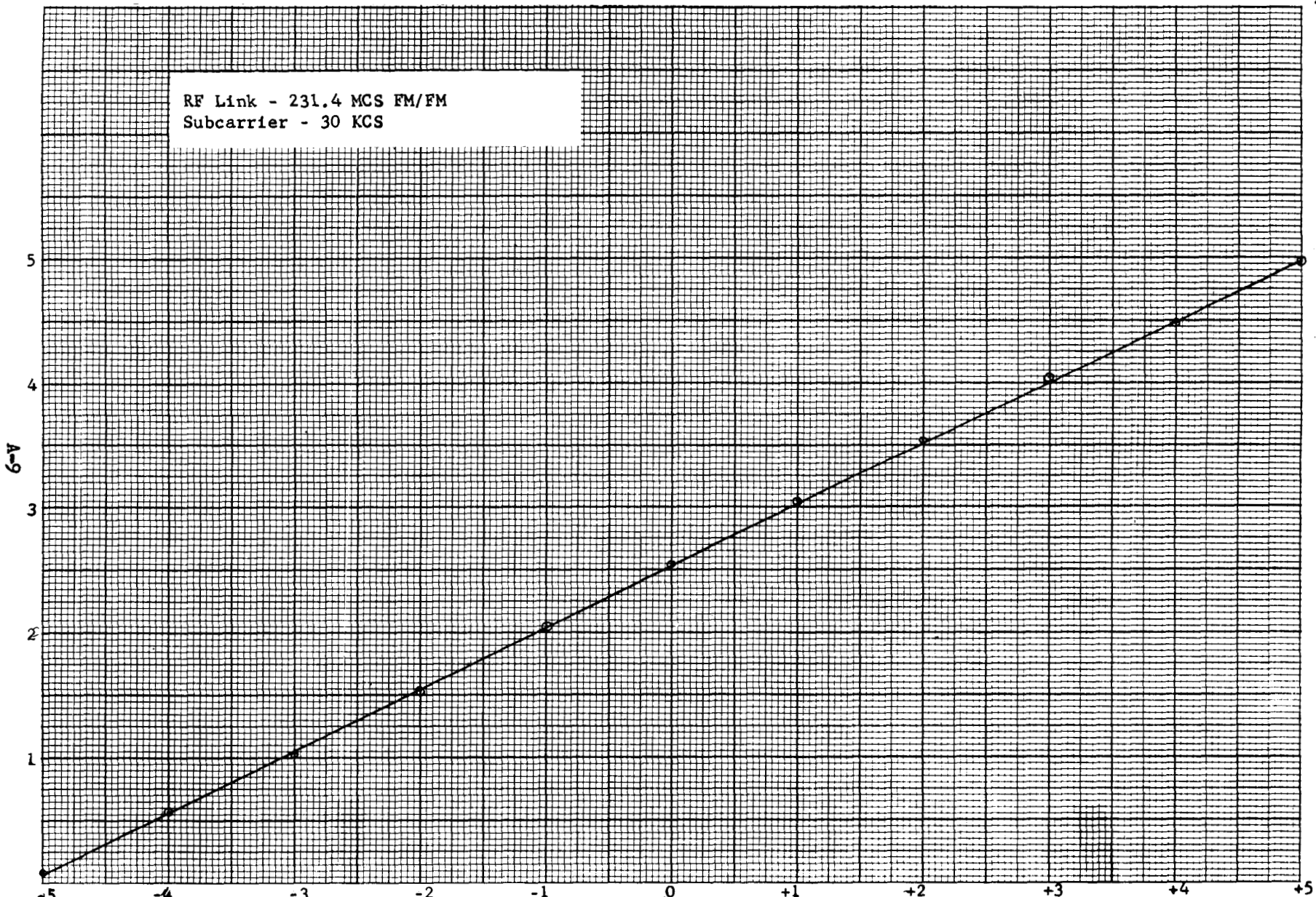


Figure A-8. Accelerometer Assembly (S/N 1030) Aft X-Axis (S/N 1044) Response Curve

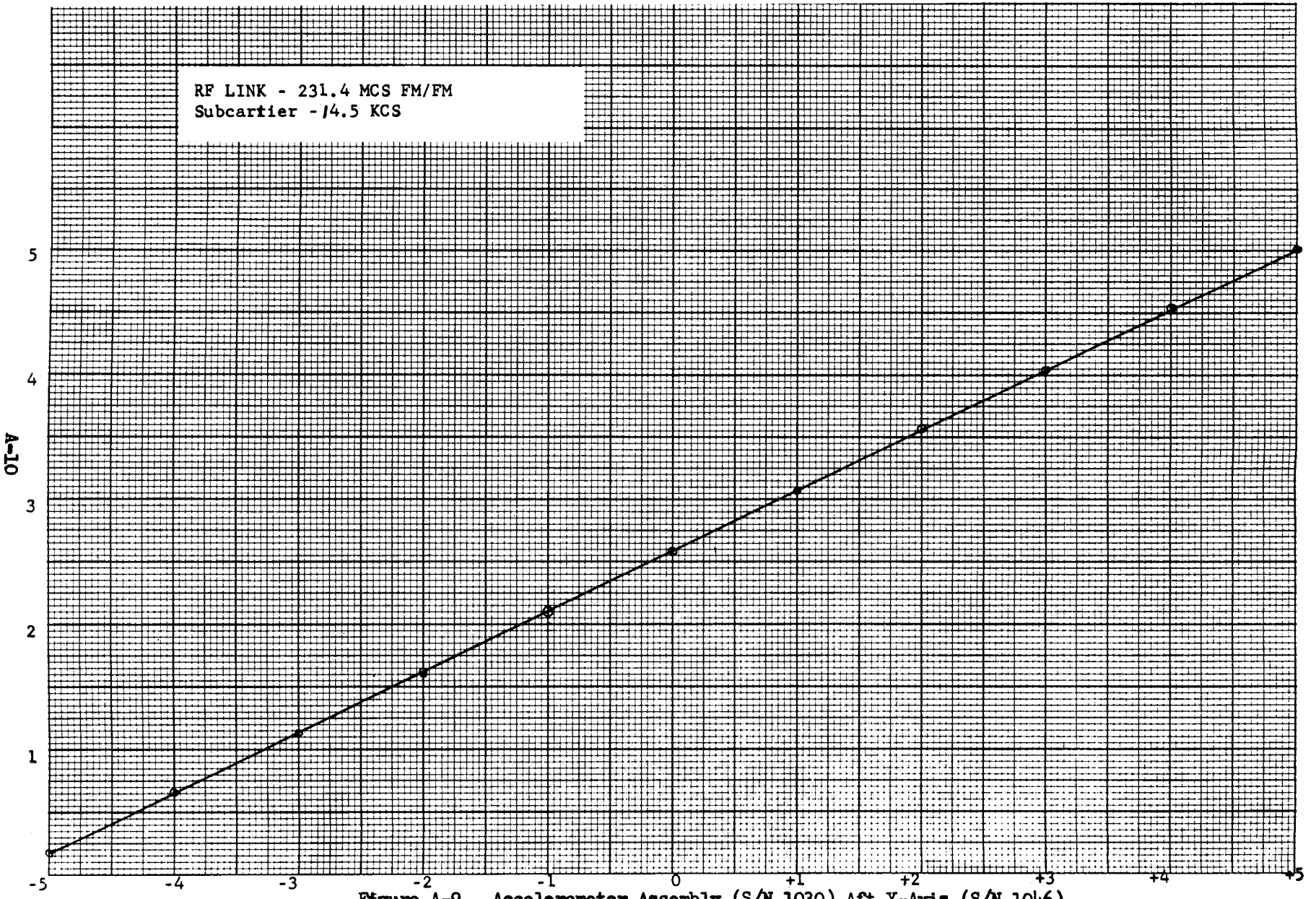


Figure A-9. Accelerometer Assembly (S/N 1030) Aft Y-Axis (S/N 1046) Response Curve