NASA CR-60028

Report No.: WAED64.55E

5 cop

First Quarterly Report

For a

Brushless D.C. Torque Motor

(25 June, 1964 - 25 Sept., 1964)

N65 12618
(ACCESSION NUMBER) (THRU)
118 1
(PAGES) (CODE)
09
(NASA CR OR TMX OR AD NUMBER) (CATEGORY)
CR-60028
FACILITY FORM 602

Contract No.: NAS5-3934

GPO PRICE $ _____

OTS PRICE(S) $ _____

Hard copy (HC) 4.00

Microfiche (MF) .75

Prepared by

Westinghouse Electric Corporation

Aerospace Electrical Division

Lima, Ohio

For

Goddard Space Flight Center

Greenbelt, Maryland

Report No.: WAED64.55E

First Quarterly Report

For a

Brushless D.C. Torque Motor

(25 June, 1964 - 25 Sept., 1964)

Contract No.: NAS5-3934

Prepared by

Westinghouse Electric Corporation

Aerospace Electrical Division

Lima, Ohio

For

Goddard Space Flight Center

Greenbelt, Maryland

Prepared by:

W. W. Yates
Equipment Systems Section

R. E. Skamfer
Conversion Systems Section

Approved by:

W. E. Wier
Manager, Equipment Systems Section

R. L. Gasperetti
Manager, Conversion Systems Section

ABSTRACT

12618

The object of this report is to provide a comprehensive record of the work performed during the first quarter on NASA Contract NAS5-3934. This contract covers the development of a brushless D. C. torque motor having characteristics similar to a conventional permanent-magnet torque motor for operation in a vacuum.

During this period, all of the design was completed and manufacturing drawings were made. Some experimental work was performed to determine the proper design of the rotor position, sensing device and a squaring circuit necessary to insure that the power transistor switches do not operate in a partially "on" state.

All of the apparent technical problems have been overcome. The motor is slightly heavier than the initial estimate, being 3.1 pounds instead of 2.7, but the overall package weight will be practically the same as estimated. All of the design procedures and calculations are given in this report. The calculations indicate that the motor will closely approach the required performance.

Author

TABLE OF CONTENTS

Section		Page
	LIST OF FIGURES	iv
I	INTRODUCTION	1
II	DISCUSSION	2
	A. General Approach	2
	B. Specific Design	4
	1. Electrical Design of PM Torque Motor	4
	2. Electrical Design of Reluctance Switch	37
	3. Mechanical Design of Rotating Package	61
	4. Solid State Commutator Design	65
	5. Mechanical Design for Control Package	77
III	NEW TECHNOLOGY	80
IV	PROGRAM FOR NEXT REPORTING INTERVAL	86
V	CONCLUSIONS AND RECOMMENDATIONS	87
VI	BIBLIOGRAPHY	89
VII	NOMENCLATURE	90
VIII	APPENDIX	97

LIST OF FIGURES

Figure	Title	Page
1	Schematic Diagram - Torque Motor and Commutator	3
2	Connection and Magnet Lineup Diagram	6
3	Layout for Illustration of Skew Effect	9
4	Layout for Ripple Determination	12
5	Permanent Magnet Demagnetization Curves	15
6	Hiperco 27 Magnetization Curve	16
7	PM Rotor - Definition of Symbols	21
8	PM Rotor	25
9	PM Rotor - Definition of Leakage Paths	28
10	Armature Punching	32
11	Reluctance Switch Punchings and Leakage Paths	39
12	Slot Leakage Constant	44
13	Equivalent Circuit for Reluctance Switch	46
14	Primary Permeance Equivalent Circuit	48
15	Secondary Permeance Equivalent Circuits	49
16	General Assembly of Rotating Package	62
17	Outline of Rotating Package	63
18	Three-Phase Inverter With Driving Transistors	68
19	Base-Drive Waveforms	69
20	Switching Characteristics	71
21	Squaring Circuit	73
22	Digital Switching Characteristics	75
23	Resistive Coupled Oscillator	76
24	Outline of Control Package	79
25	Symbols for Permeance Derivations	98

I. INTRODUCTION

This report will provide a comprehensive record of the work performed to date on NASA Contract NAS5-3934 - Brushless D. C. Torque Motor. It covers the first quarter of work on the contract from June 25, 1964 to September 25, 1964. This period encompasses the design and drafting stages in the development.

The purpose of this research effort as stated in NASA Specification #63-135 dated November 15, 1963, is to design and develop a brushless D. C. torque motor having performance characteristics similar to those of a conventional permanent-magnet D. C. torque motor. The developed motor will be designed for high torqueing sensitivity, high no-load running efficiency, and minimum size and weight. The motor must be capable of operating in a vacuum at 1×10^{-9} mm Hg for one year in an ambient range of -10°C to +70°C. A 50 g, 2 msec shock and 5 minutes of random vibration from 20 to 2000 cycles per second at 15 g's rms in each of three mutually perpendicular directions must be withstood. It is also desirable that the commutator be sufficiently versatile to permit shaft position control and speed control using both excitation level and pulse modulation systems. Two engineering models are to be built and shipped to NASA.

The torque motor may properly be divided into three systems which form separate design entities although interrelated in function and interdependent in operation. These are the permanent-magnet motor itself, the rotor-position-sensing device, and the electronic control. The permanent-magnet motor consists of a rotating permanent-magnet field and a stationary armature. The position of the rotating field magnet in relation to its armature field is sensed by the rotor-position-sensing device. This device transmits the position information to the electronic control. The control uses transistor switches to change the position of the armature field in order to maintain torque as the position of the rotating field changes. The details of these three systems will be covered in the discussion.

As of the end of the reporting period, the design of all components has been completed. Complete manufacturing drawings have been made and issued to the shop. A purchase order to the Westinghouse Research Laboratories to develop the solid lubricant bearings was written on July 14, 1964.

II. DISCUSSION

A. General Approach

Various types of brushless d-c motors were considered for this application. One type was an extremely slow speed synchronous (reluctance or permanent-magnet) motor excited from an inverter. This motor would exhibit a high ripple torque and would be subject to pulling out of step if pull-out torque is exceeded. Another approach considered was the use of an induction motor with an inverter combined with the motor stator. The performance of this motor would have the characteristic of an a-c motor.

In order to duplicate the characteristics of a conventional permanent-magnet d-c torque motor with a brushless d-c motor, it is necessary to sense rotor position. A true d-c characteristic is obtained by sensing the rotor position and switching stationary armature circuits in proper relation to a moving permanent-magnet field. The function of the commutator and brushes can be duplicated in a motor by a solid state, electronic switching system. The result is a brushless d-c motor without the deficiencies of a mechanical commutator. A schematic representation of this approach is shown in Figure 1.

The brushless motor uses a permanent-magnet rotor for field excitation and a slotted stator with a conventional three-phase induction motor winding for the armature field. The current in the armature is switched by a solid state three-phase bridge switching network. Switching logic and rotor position sensing for the commutation process is accomplished by using a reluctance switch. The drive power for the reluctance switch is obtained from an oscillator which is powered from a constant 28 volt d-c source. A second reluctance switch is provided to obtain reverse rotation.

By using an element (reluctance switch rotor) which continuously detects the angular position of a permanent-magnet torque rotor with respect to its stator poles, a torque motor can be developed which has complete angular freedom. Thus, the shaft can furnish torque in appreciable magnitude while rotating or while in a locked position.

The variation in magnitude of the output signal obtained from the reluctance switch occurs over a period of time which is comparatively lengthy as contrasted to the high speed switching capability of semiconductor devices. It is therefore necessary in this application to provide a circuit that will detect the output voltage level and provide a digital response at a predetermined value. This will insure that the power transistors do not operate in a partially "on" state and improve the circuit efficiency.

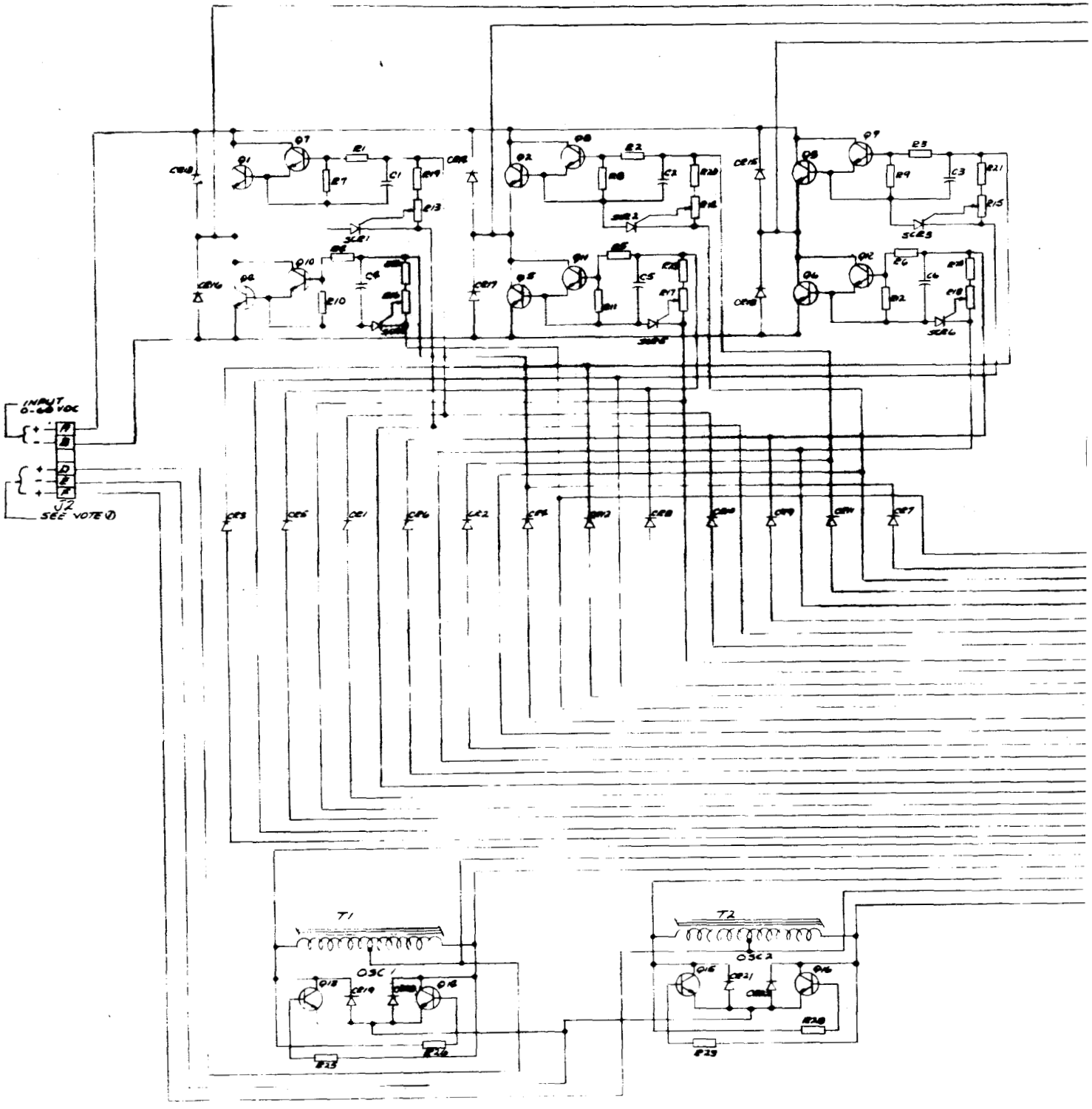
INPUT
VDC
J2
SEE NOTE (1)
T1
T2
OSC 1
OSC 2

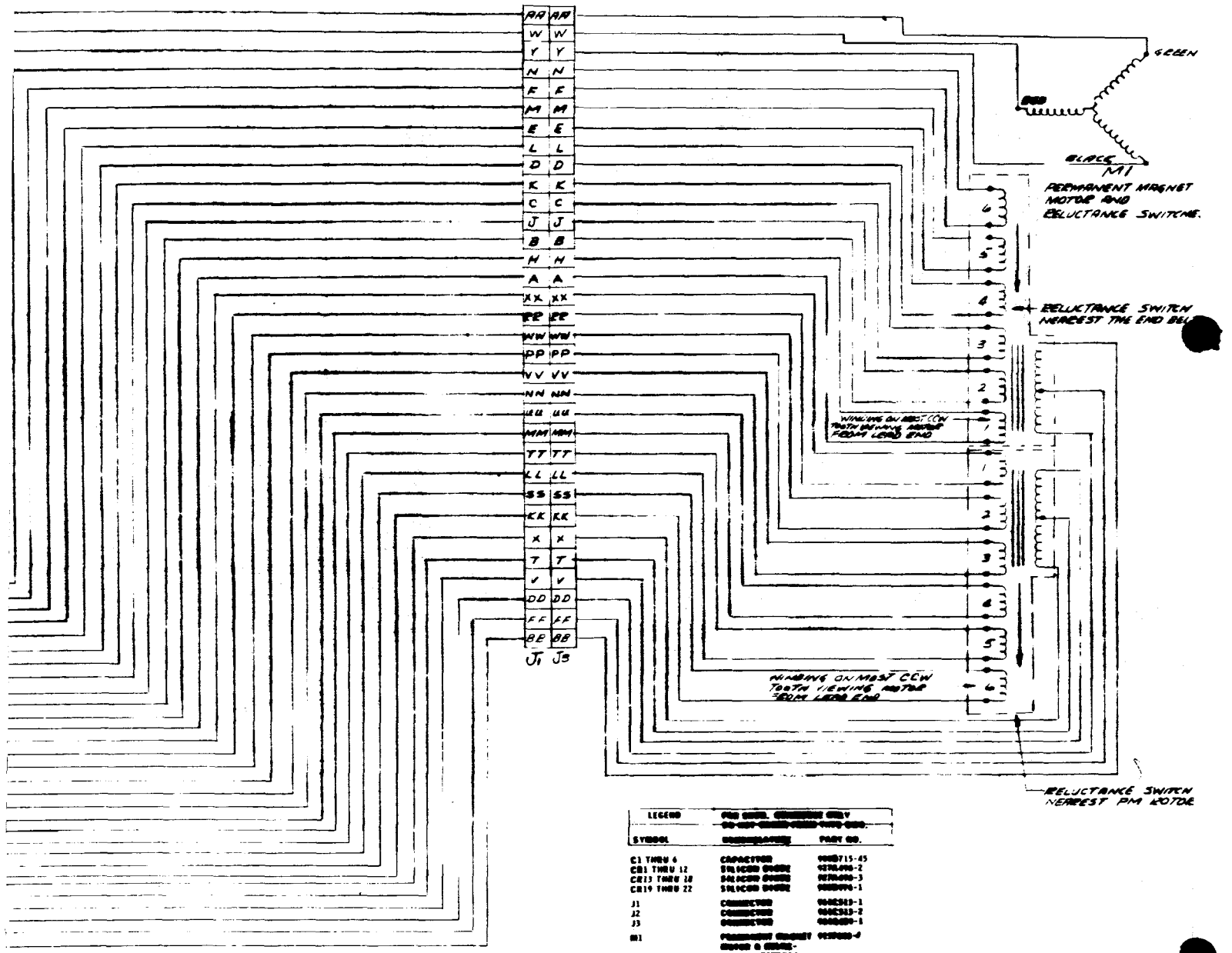

LEGEND	[illegible]	
SYMBOL	[illegible]	PART NO.
C1 THRU 6	CAPACITOR	[illegible]715-45
CR1 THRU 12	SILICON DIODE	[illegible]-2
CR13 THRU 18	SILICON DIODE	[illegible]-3
CR19 THRU 22	SILICON DIODE	[illegible]-1
J1	CONNECTOR	[illegible]-1
J2	CONNECTOR	[illegible]-2
J3	CONNECTOR	[illegible]-1
M1	PERMANENT MAGNET MOTOR & RELUCTANCE SWITCHES	[illegible]-[illegible]
Q1 THRU 6	TRANSISTOR	[illegible]-1
Q7 THRU 16	TRANSISTOR	[illegible]-2
R1 THRU 6	RESISTOR	[illegible]
R7 THRU 12, R19 THRU 24	RESISTOR	[illegible]
R13 THRU 18	POTENTIOMETER	[illegible]-10
R25 THRU 28	RESISTOR	[illegible]-52
SCR1 THRU 6	SILICON CONTROLLED RECTIFIER	[illegible]-7
T1, 2	TRANSFORMER	[illegible]-1

NOTE 1) APPLY A 28 VDC SIGNAL BETWEEN PINS D AND E OR PINS F AND E TO OBTAIN FORWARD AND REVERSE ROTATION -- CAUTION: DO NOT APPLY VOLTAGE TO BOTH SETS OF TERMINALS AT THE SAME TIME.

B. Specific Design

1. Electrical Design of PM Torque Motor

a. General

The following items of NASA Specification #63-135 were considered in the electrical design of the permanent-magnet motor.

(1) The torque motor must be as small and as light-weight as possible, not to exceed 3.5 inches in diameter and 2 pounds weight (exclusive of commutating circuitry). (The preliminary design indicated that the combined motor and reluctance switches would weigh approximately 2.7 pounds. The final design weight was 3.1 pounds.)

(2) The torque motor must develop the maximum possible shaft torque, not to be less than 100 in-oz at 40 VDC excitation.

(3) The torque motor must not draw more than 1 ampere of current at a stall torque of 100 in-oz.

Since the requested weight would obviously be exceeded, it was felt that the stall torque requirement of 100 in-oz at 40 VDC and 1 ampere should be taken as nominal (calculated performance rather than minimum performance. In the design, the size of the motor was increased until, with a calculated 1 ampere flowing at 40 VDC, the calculated stall torque was 100 in-oz. The calculation accuracy can not be ascertained until the unit is built and tested.

(4) The torque motor must be capable of continuous operation at speeds up to 100 RPM.

(5) The no-load speed of the torque motor must be approximately 30 RPM with 3 VDC excitation at the armature terminals.

Since the speed at 3 VDC would depend to a large extent on the bearing friction (which is not accurately known) the no-load speed must be determined by test. No attempt was made to calculate this condition.

(6) The torque motor no-load running losses must be as small as possible, not to exceed 0.5 watts at 30 RPM.

(7) The peak-to-peak ripple torque at constant armature voltage, as a function of rotor angular position, must be as low as possible, not to exceed 10 percent of the average torque or 0.5 in-oz, whichever is larger.

There is a large inherent ripple in the three-segment winding chosen for the armature because of the alternate use of two and three legs of the winding. It is difficult to obtain a value for ripple torque analytically. A graphical procedure was used which gave a value of 12.8 percent. However, the procedure ignored certain characteristics which would tend to make the ripple torque lower.

(8) The torque motor static friction torque must be as small as possible, not to exceed 0.5 in-oz for any position of the torquer.

This also is a parameter which cannot be determined except by test. The bearings to be used are solid lubricant bearings to be fabricated by the Westinghouse Research Laboratories using relatively new lubricating materials.

(9) The torque motor and drive circuitry must be able to withstand continuous stall current at 60 VDC excitation without damage or deterioration of performance.

(10) The torque motor and commutator must be capable of operating in a vacuum of 1×10^{-9} mm Hg for a 1 year period.

(11) The torque motor and commutator must operate properly over an ambient temperature range of -10°C to +70°C.

b. Consideration of Ripple Torque and Effective Conductors

The circuit of the armature is identical to a Y-connected, 3-phase, induction motor. A delta connection could be used, but the only difference would be that more turns per coil of a smaller wire size would have to be used. The switching is such that the three phases of the winding are alternately connected as shown in Figure 2, having for the first connection one phase connected in series with the other two in parallel. The second connection has two phases connected in series with the third phase disconnected.

The standard formula for torque of ordinary DC motors is

$$\text{Torque (oz-in)} = \frac{(22.6)(p)(\emptyset)(Z)(I_a)}{(pp)} 10^{-8}$$

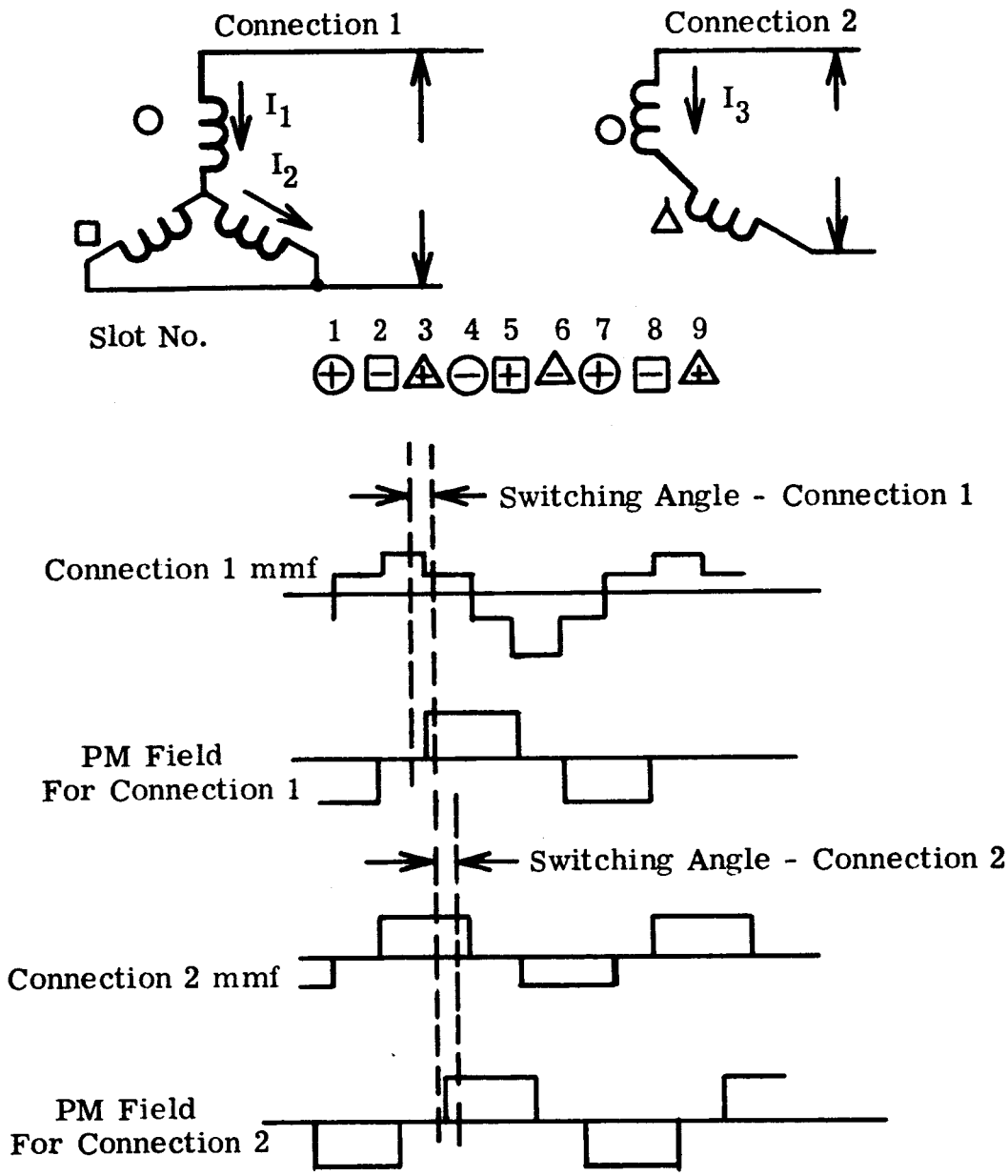

FIGURE 2. Connection and Magnet Lineup Diagram

Where p = Number of poles
$\emptyset$ = Flux in lines per pole
Z = Total series conductors
I_a = Armature current
(pp) = Number of parallel paths

A more basic torque formula is

$$\text{Torque} = KBI_aZ$$

Where K = Constant
B = Flux density perpendicular to conductors

Comparing the two equations, it may be understood that the first equation is based on having a square wave of flux density which links all the series conductors, Z. These conductors all carry I_a current. If the flux density is something other than a square wave, that is, a shorter wave with a higher flux density, it is taken care of in the formula by the fact that less conductors are linked. However, with the winding in question, in some instances, all of the conductors do not carry the same current nor are they all linked by the same flux density. It is therefore necessary to make some analysis to determine the effective conductors Z for the winding.

It was determined that a graphical procedure could be used in conjunction with the second equation assuming resistance limited currents (locked rotor).

Assume

1. A total flux per pole of 1 per unit.

2. This total flux gives an average density (square wave) of 1 per unit.

3. With the phases connected as shown in position 1 of Figure 1, I_1 = 1 per unit.

4. Rph - hot resistance per phase = 1 per unit.

Then for a quasi-square wave of flux density (120° conduction), which is what would be obtained, disregarding fringing flux, with a 0.667 pole enclosure, the peak density would be 1.5 per unit,

since the same flux must be crowded into an area which is 2/3 of the total. If I_1 is equal to 1 per unit, I_2 (see Figure 1) is equal to 0.5 per unit. The total per unit resistance of the connection 1 circuit is 1.5; the total for connection 2 is 2; therefore $I_3 = 1.5/2 = 0.75$ per unit.

Figure 1 also shows mmf plots for the two connections assuming a winding having one slot per phase per pole. The field corresponding to the magnet is shown located 90 electrical degrees from the armature field which is the theoretical position of maximum torque. A 0.667pole enclosure is assumed. The field magnet will vary its position in relation to the armature over a switching angle. This is 30 electrical degrees which is indicated by the dashed lines.

The per unit torque can then be found by applying the second equation on a per unit basis for each conductor and adding the results. For connection 1, assume that at the midpoint of the switching angle, the PM field half links conductors 3 and 5 and totally links conductor 4. Attention must be paid to the direction of the torque in the following analysis.

Per unit torque = BIZ

$= (1.5)(1) + (2)(0.75)(0.5) = 2.25$ for the three conductors. Since the situation around the stator is symmetrical, the total per unit torque $= 2.25$ Zph.

Where Zph = Series conductors per phase

In a similar manner for connection 2, conductors 4 and 5 only are linked giving

Per unit torque $= (1.5)(0.75)(2)$Zph $= 2.25$ Zph

Therefore, it would appear that the effective conductors to be used in Equation 1, should be 2.25 Zph with I_a determined using position 1. However, the assumption of one-half linkage of conductors 3 and 5 with connection 1 is false. It would appear that a more likely assumption would be that these conductors are not linked at all because of the slot opening. This would give a per unit torque for connection 1 of $(1.5)(1)$Zph $= 1.5$ Zph which not only would lower the average effective conductors, but would give an extremely high ripple torque. It is necessary to consider ways of lowering this ripple torque.

Obviously, lowering the slot opening would help. Therefore, the slot opening was held to a minimum practical which was considered to be 0.05. Increasing the pole enclosure was considered, but this would increase flux leakage in the magnet unless pole shoes were used which would entail a significant sacrifice in performance.

It was decided to investigate the effect of skew. By way of illustration, the procedure was performed on a winding having one slot per phase per pole for both 30 and 60° skew. Figure 3 shows a planar developed view of several slot openings of the stator with the skewed magnet rotor superimposed on top of them in various positions corresponding to the switching angle. The figure is drawn to angular scale.

NOTE: Angles are in electrical degrees
Dashed lines for 30° skew
Solid lines for 60° skew

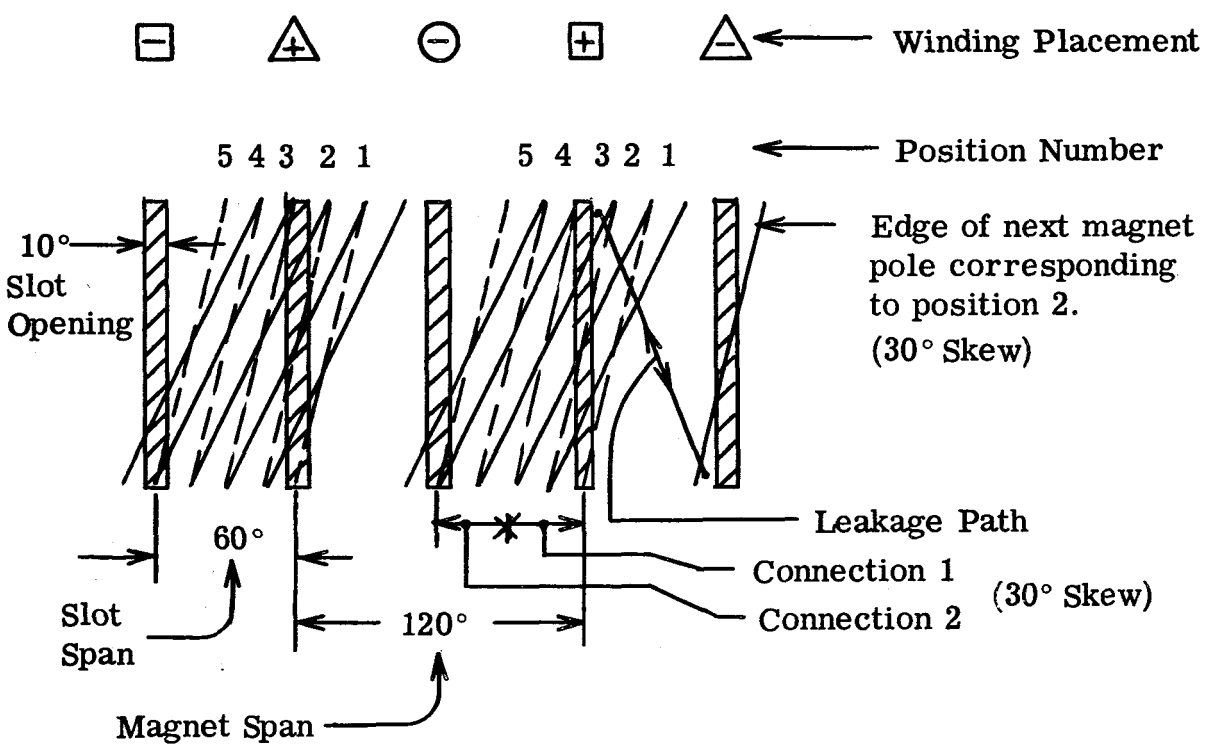

FIGURE 3. Layout for Illustration of Skew Effect

The peak quasi-square wave density was considered to link a conductor only to the extent that the PM linked the steel of the tooth on the outside (related to the magnet) of the conductor. The slot opening was assumed to be 10 degrees. Positions 1, 2 and 3 are related to connection 1. Positions 3, 4 and 5 are related to connection 2. (See Figure 1.)

Connection 1

Position 1

Conductor 4 is approximately 90% linked
Conductor 3 is 100% linked
Conductor 2 is not linked

Peak Density = 1.5 per unit
Current = 1 per unit in conductor 3, 0.5 in conductors 2 and 4
Per Unit Torque = (1.5)(1)Zph + (1.5)(0.5)(0.9)(Zph)

= 2.175 Zph

Position 2

Conductors 4 and 2 are approximately 40% linked
Conductor 3 is 100% linked

Torque = (1.5)(1)Zph + (1.5)(0.5)(0.4)(2)Zph = 2.1 Zph

Position 3

Conductor 4 is not linked
Conductor 3 is 100% linked
Conductor 2 is 90% linked

Torque = 2.175 Zph

Connection 2

Position 3

Conductor 4 is not linked
Conductor 3 is 100% linked
Conductor 2 is 90% linked

Current = 0.75 in conductors 3 and 2, 0 in conductor 4

Torque = (1.5)(0.75)(1.9) Zph = 2.14 Zph

Position 4

Conductors 2 and 3 are 100% linked

Torque = 2.25 Zph

Position 5

Same as position 3

Torque = 2.14 Zph

Average torque = 2.17 Zph

Ripple peak-to-peak = 2.25 - 2.1 = 0.150

$$\% \text{ Ripple} = \frac{(0.150)(100)}{2.17} = 6.92\%$$

A similar calculation for a 60° skew showed that the ripple would be much higher.

The edge of the next magnet pole corresponding to position 2 is also shown on Figure 3. A major flux leakage path in the tooth-face is indicated due to the skew. Consequently, if skew is used, a winding having 2 slots per phase per pole should be used to break up the leakage path shown.

Therefore, it was decided to try a 48 slot, 8 pole winding with the rotor skewed 30 electrical degrees. A preliminary design indicated that a stator inside diameter of 2 inches would be close. Therefore, a 48 slot stator punching (same as that shown in Figure 4) with a 2 inch inside diameter and a slot opening of 0.05 was laid out with the winding placed in the slots having the winding direction indicated by + or - signs. A movable rotor was made similar to that shown. By rotating the rotor to positions corresponding to the extremes and the middle of the switching angle for both connections, the effective conductors and the ripple were determined using the procedures previously described.

Also examined by the same procedure were a 48 slot, 8 pole winding short-chorded by one slot with 1 slot skew and a 36 slot (fractional-slot) 8 pole winding wound full pitch with a half slot skew.

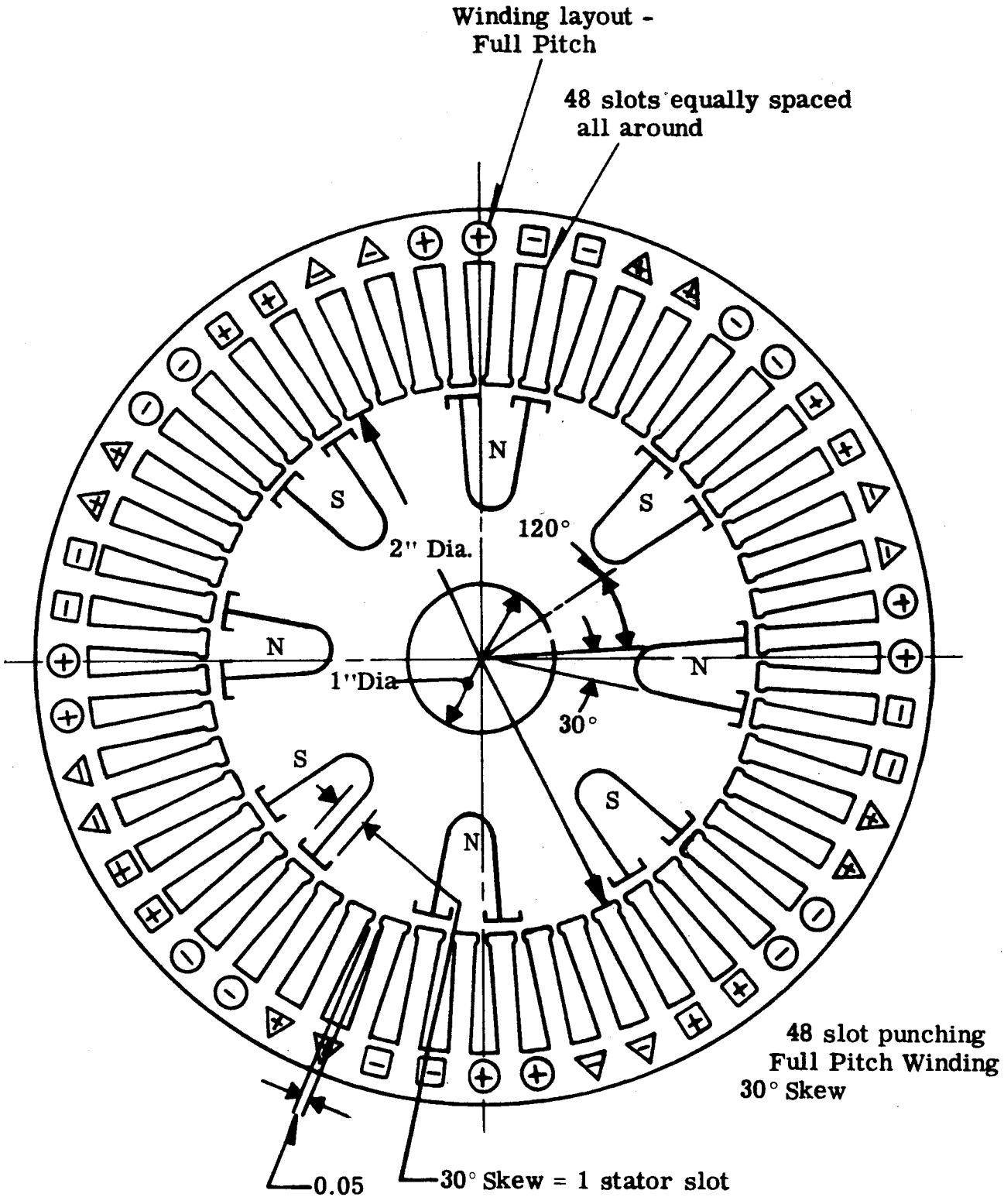

FIGURE 4. Layout for Ripple Determination

The results are tabulated below.

Type	Average Effective Conductors	Peak-to-peak Ripple Torque
48 slot - Full pitch	2.05	12.8%
48 slot - Short chord	1.956	19.3%
36 slot	1.90	16.1%

It was concluded from the above that a winding wound full pitch, having 2 slots per phase per pole, and having 30 electrical degrees skew would give the least ripple. Therefore, these parameters were used to design the PM motor.

The calculations indicated a peak-to-peak ripple of 12.8%, most of which is due to the difference between connection 1 and connection 2. However, the analysis ignored certain factors which would tend to lower the actual ripple. Among these are the following:

(1) Fringing flux would cause more flux linkage than the simple graphical method would indicate and thus would lower ripple.

(2) Connection 2 draws less current and hence, voltage would be raised slightly due to less drop in the supply circuit and any series components. This would tend to decrease ripple.

(3) Slow switching from one connection to the other would cause unequal heating in the phases in connection 1 and thus lower current for this connection and hence ripple.

(4) Saturation in the teeth would cause relatively more flux to flow in those teeth only partially linked which would lower ripple.

It is therefore concluded that there is a good chance that the maximum requested peak-to-peak ripple of 10 percent will be met with the PM motor as designed. The ripple is close to the minimum that could be obtained with a 3-segment winding without a significant sacrifice in performance.

c. PM Motor Design

The first step in the design of the PM motor was the selection of active electrical materials. For minimum size and weight, it is necessary to use the best available materials for the intended task. It was necessary to select the following materials before proceeding with the design.

(1) Permanent Magnet. It is desirable to use a cast rotor both for simplicity and to avoid the added weight of fabricating a rotor. Alnico V was selected as the magnetic material having the highest energy content that could still be cast. Use of a higher energy material was considered later in the design. In order to take full advantage of Alnico V, it is necessary that the magnet be magnetized while in the stator. The demagnetization curve for Alnico V is shown in Figure 5.

(2) Electrical Steel. For minimum size and weight, it is necessary to work the electrical steel at a high magnetic density. The steel giving the highest permeability at the high densities considered is Hiperco 27. Lamination thickness of 8 mils was chosen because of availability only. The magnetization curve for Hiperco 27 is shown in Figure 6.

(3) Magnet Wire. Heavy build ML enamelled wire was chosen. This has low outgassing characteristics and has outstanding electrical and mechanical properties. ML is the trade name of a polyimide type insulating resin developed by Dupont.

(4) Slot Insulation. An insulation thickness of 8 mils was assumed in the design. This is composed of 2-3 mil thicknesses of Pyre ML adhesive tape plus a small allowance for punching stagger. Pyre ML is glass impregnated with ML resin.

The next step in the design is to state the starting electrical and mechanical limitations and assumptions. These are enumerated and justified below.

(1) Poles = 8 (A 10 pole design will be considered)

(2) Slots = 48

(3) Outside Diameter = 3.313 inches. This is the highest punching diameter allowed by the 3.5 inch diameter specification limitation and the frame thickness.

(4) Pitch = Full

(5) Pole Enclosure = 2/3

(6) I_a = 1 amp.

(7) V = applied voltage = 40

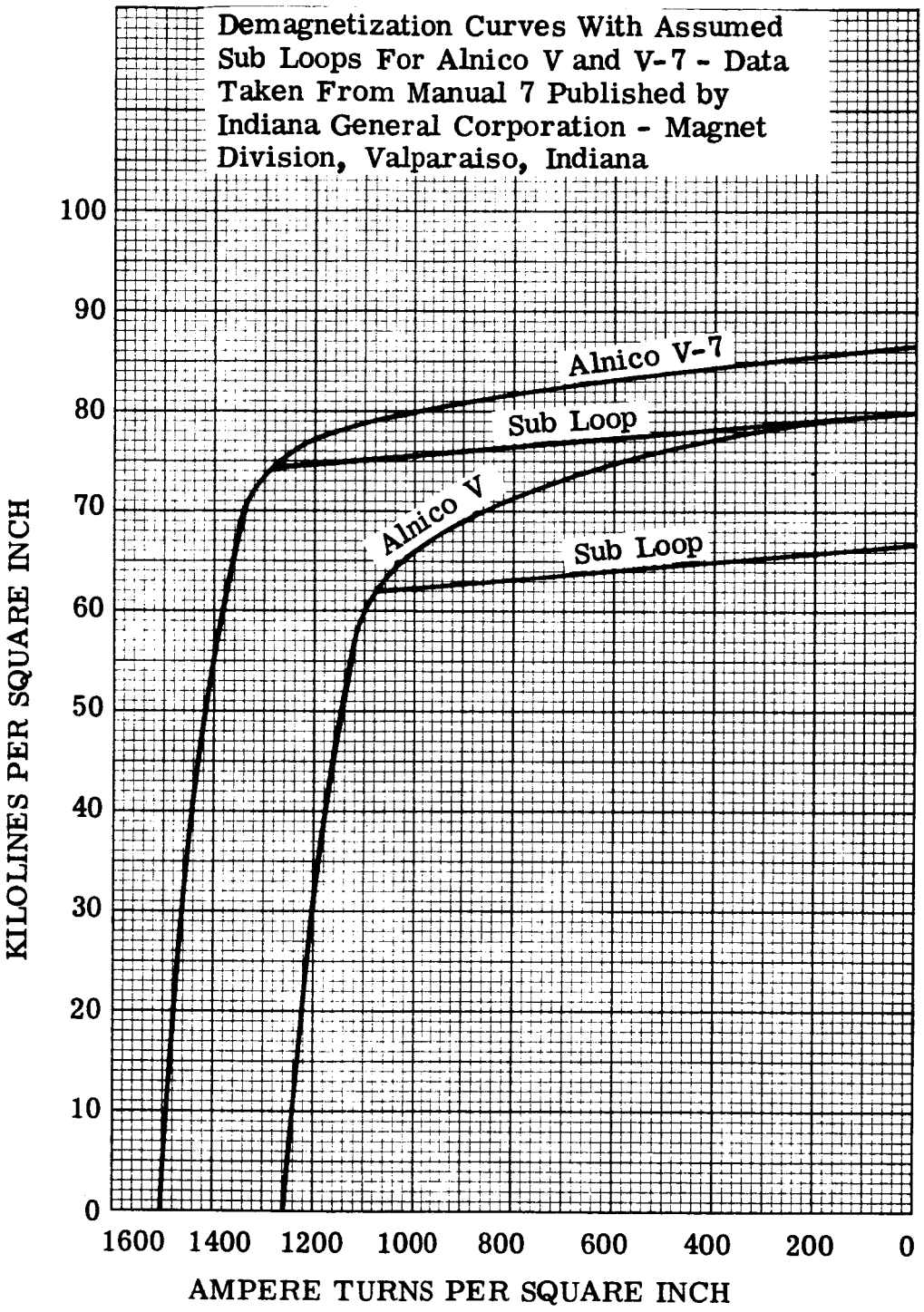

FIGURE 5. Permanent Magnet Demagnetization Curves

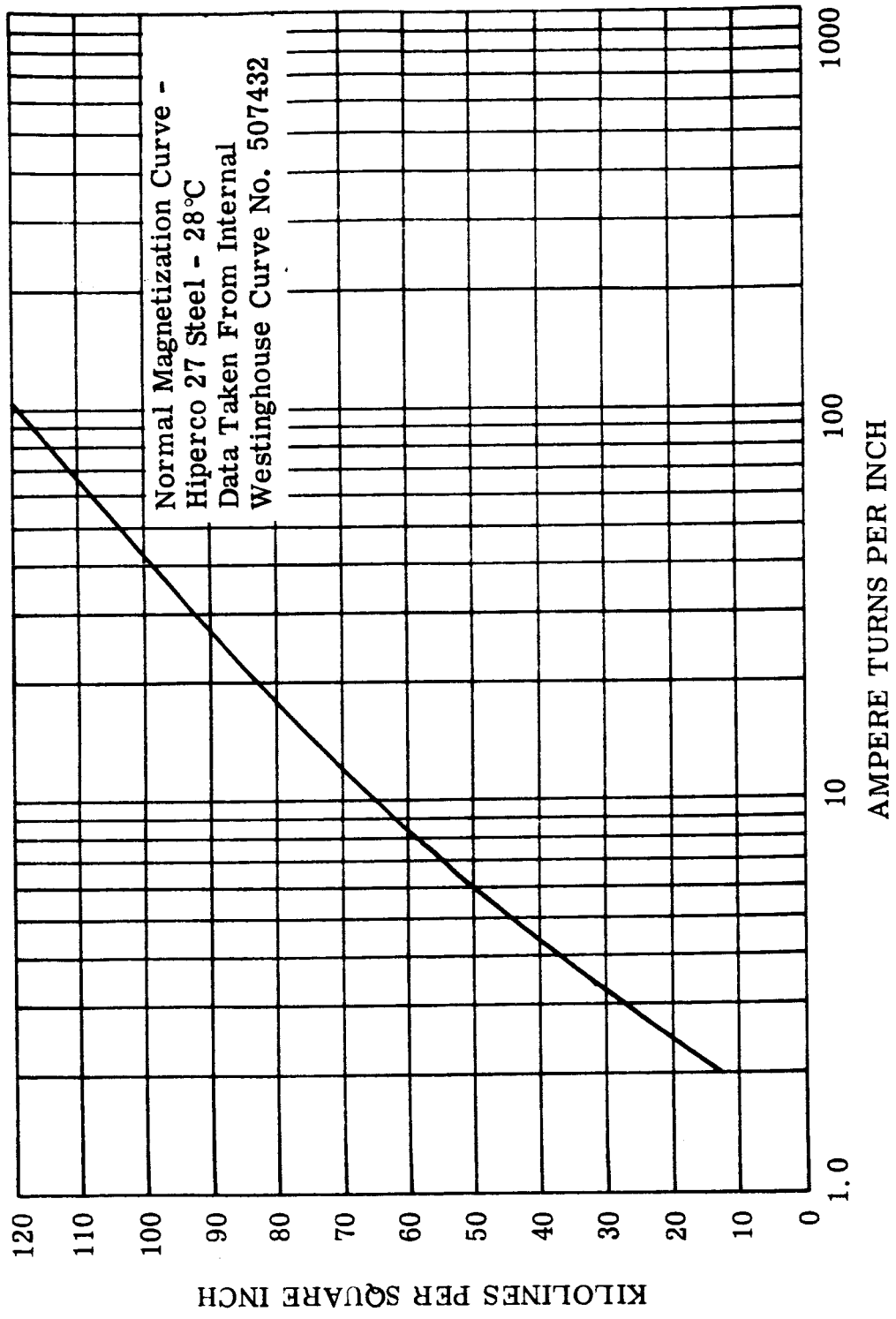

FIGURE 6. Hiperco 27 Magnetization Curve

(8) Drop in Switches = 0.5 volts. This figure was assumed before full knowledge of the control circuit was available. The actual drop will be approximately 1.5 volts. This would cause a theoretical drop in the current and torque over that calculated of 2.5 percent.

(9) Permanent magnet inside diameter = 1.00. This was obtained from a preliminary layout. It is determined by the necessary bearing bore.

(10) Slot opening = 0.05

(11) Tooth tip thickness = 0.025. This follows usual practice for aircraft motor punchings.

(12) Skew = 30 electrical degrees. The effect of skewing the PM rotor is to lower the length of leakage paths. The effect of skewing the stator is to lessen slot winding area. In an 8 pole design, 30 electrical degrees correspond to 7.5 mechanical degrees. Half of the skew was put in the stator and half in the PM rotor making the skew in each only 3.75 mechanical degrees. The deleterious effects of this slight skew were ignored in the calculation.

(13) Heat Factor = 1.2. This corresponds to an average stator wire temperature of 76°C. The cooling in a vacuum would be from radiation and conduction. The actual cooling conditions are not known. The assumed heat factor would probably not be large enough in a 70°C ambient. The heat factor was set at the above value with the thought of keeping the required performance nominal rather than minimum.

The first part of the actual design is the design of the magnetic circuit. The formulas used are derived below. The general procedure to be used will be to assume a maximum tooth flux density and to derive all the rest of the circuit dimensions.

Tooth area = (e)(s)(ATW)(w)(0.95)

Where

e = pole enclosure in per unit
s = slots per pole
ATW = tooth width in inches
w = stack length in inches
0.95 = stacking factor

Total flux = $\phi = (B_T)$(Tooth Area)

Where

B_T = tooth density in lines per square inch

or

$$\phi = (e)(s)(ATW)(w)(B_T)(0.95) \text{ in lines}$$

Let D equal the diameter at the center of the air gap and assume it also applies to the OD of the magnet. This will be close enough for practical purposes since D will not be used to determine the air gap length.

$$\text{Air Gap Area} = \frac{(\pi)(D)(w)(e)(s)(1.08)}{S_p}$$

Where

S_p = Number of stator slots

1.08 = Factor to allow for fringing flux (This factor was added after several iterations)

Since the same total flux is present in the air gap as is present in the teeth

$$\text{Air gap density} = B_{AG} = \frac{\phi}{\text{Air Gap Area}}$$

$$= \frac{(B_T)(ATW)(S_p)(0.95)}{(\pi)(D)(1.08)}$$

The ampere turns required for the air gap

$$= \frac{(S_f)(B_{AG})(L)}{3.19}$$

Where

S_f = saturation factor = multiplier on air gap length to allow for saturation of the steel.

L = Effective air gap length including a multiplier to allow for the stator slot openings. This multiplier is commonly called Carter's Coefficient.

Ampere turns for air gap (substituting from previous equations)

$$= \frac{(S_f)(B_T)(ATW)(S_p)(L)(0.95)}{(3.19)(\pi)(D)\ 1.08}$$

$$\text{Area of Magnet} = \frac{(\pi)(D)(e)(s)(w)}{S_p}$$

This is the circumferential area of the magnet assuming D is the OD of the magnet. Actually, the chordal area should be used. Since these equations are to be used for design and not for performance, the error involved is small and can be neglected.

B_m = flux density in the magnet

$$= \frac{(L_f)(\emptyset)}{\text{Magnet Area}}$$

where:

L_f = leakage factor = multiplier on air gap flux to obtain the magnet flux. The magnet flux is equal to the air gap flux plus the leakage flux.

$$B_m = \frac{(L_f)(B_T)(ATW)(S_p)(0.95)}{(\pi)(D)}$$ substituting for $\emptyset$ and magnet area.

$$ATW = \frac{(\pi)(D)(B_m)}{(L_f)(B_T)(S_p)(0.95)}$$

Refer to Figure 7 for symbol definition for the following derivation of magnet length.

a = 1/2 the magnet width at the air gap.

$$= \frac{(\pi)(D)(e)(s)}{2\ S_p}$$

$$l = \frac{D}{2} - \frac{ID}{2} - \frac{a}{2} = \frac{D}{2} - \frac{ID}{2} - \frac{(\pi)(D)(e)(s)}{4\,S_p}$$

$$= \frac{2(S_p)(D) - 2(S_p)(ID) - (\pi)(D)(e)(s)}{4\,S_p}$$

$$l_1 = \frac{(ID + a)(\pi)}{2\,p} - \frac{a}{2}$$

$$l_1 = \frac{2(\pi)(ID)(S_p) + (\pi)^2(D)(e)(s) - (\pi)(p)(D)(e)(s)}{4(S_p)(p)}$$

Total Magnet Length = $l + l_1$

$$= \frac{[2(S_p)(p) - 2(\pi)(e)(s)(p) + (\pi)^2(e)(s)]\,D - 2(S_p)(ID)(p) + 2(\pi)(ID)(S_p)}{4\,(S_p)(p)}$$

Ampere turns per inch in magnet

$$= \frac{\text{Ampere turns for air gap}}{\text{Magnet length}}$$

$$= \frac{4(S_f)(B_T)(ATW)(L)(p)(S_p)^2(0.95)}{(1.08)(3.19)(\pi)(D)\left[[2(S_p)(p) - 2(\pi)(e)(s)(p) + (\pi)^2(e)(s)]\,D - 2(S_p)(ID)(p) + 2(\pi)(ID)(S_p)\right]}$$

Substituting equation for ATW

$$AT/in = \frac{4(S_f)(L)(p)(S_p)(B_m)}{(1.08)(3.19)(L_f)\left[[2(S_p)(p) - 2(\pi)(e)(s)(p) + (\pi)^2(e)(s)]\,D - 2(S_p)(ID)(p) + 2(\pi)(ID)(S_p)\right]}$$

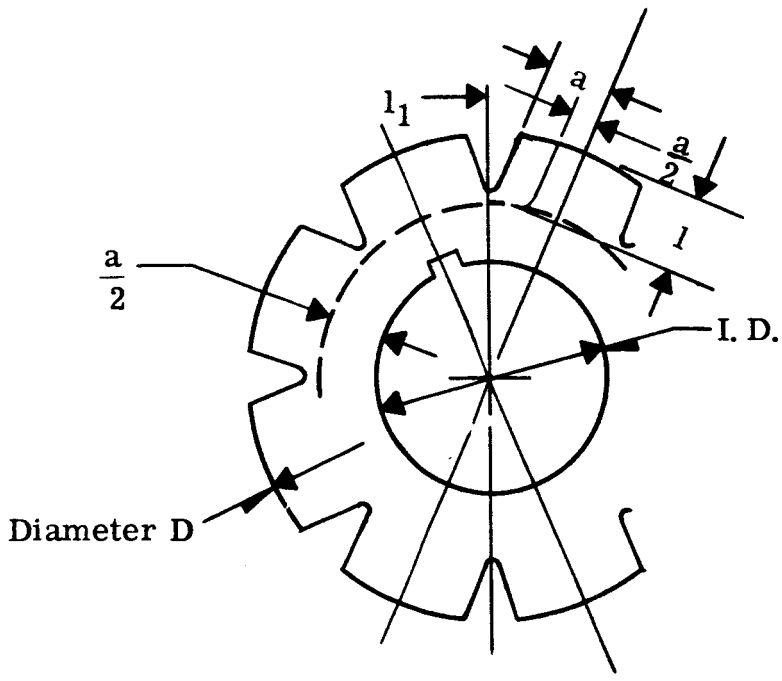

FIGURE 7. PM Rotor Definition of Symbols

It is necessary to match the characteristics of the permanent-magnet material with the design. With Alnico V magnet material, if the magnet is exposed to an air gap or demagnetizing mmf, the operating point on the demagnetization curve will move to the left along the curve. If the air gap or demagnetizing mmf is then removed, the magnet will not return to its original state, but will return along a sub loop. This sub loop, in the operating region, can be approximated by a straight line having the same slope as the main demagnetization curve where it intersects the B axis.

On Figure 5, the operating sub loop is assumed, so that most of the demagnetization mmf is available without too great a sacrifice in available flux density. The assumption of the sub loop is a matter of judgement. It is then desired to pick an operating point along the sub loop so that sufficient demagnetization mmf is left for armature reaction. Using the chosen sub loop and the chosen operating point, the magnetic circuit dimensions can be determined by solving the equation for ATW and ampere turns per inch.

The procedure to be followed is to assume a tooth density, a likely operating sub loop demagnetization curve, an operating point, a leakage factor, a saturation factor, and a stack length. Using these, the magnetic circuit is derived from the equations. The leakage factor and saturation factor are then calculated. The procedure is iterated at this point if these factors vary significantly from the assumed values. When these values finally are close enough, if the saturation factor is too high or too low, the tooth density is changed and the circuit is recalculated. When a satisfactory saturation factor is obtained, the electrical design is performed and torque is calculated. If torque is not right, stack length is changed and the calculation repeated. Armature demagnetizing mmf is then calculated and compared with the amount allowed for it on the original assumption at the operating point. If an insufficient or an excessive amount was allowed in the assumption, the operating point or the sub loop is changed. All calculations are then repeated.

Actually using this procedure usually requires some iteration. However, only the final calculation is given below.

Assumptions:

$S_f = 1.3$
$L_f = 1.25$
$B_T = 120,000$
$B_m = 65000$ (operating point)

AT/in = 430 (operating point)
L = 0.012

The assumed sub loop demagnetization curve is shown on Figure 4.

w = 0.53

Then

$$AT/in = \frac{(4)(1.3)(0.012)(8)(48)(65000)}{(1.08)(3.19)(1.25)\left[\left[(2)(48)(8)-2(\pi)(0.667)(6)(8)+(\pi)^2(0.667)(6)\right] D - (2)(48)(1.00)(8) + (2)(\pi)(1.00)(48)\right]}$$

= 430

Solving for D

606.4D - 467 = 840

D = 2.16

Assume actual AG length = 0.0093

Stator ID = 2.16 + 0.0093 = 2.17

Magnet OD = 2.16 - 0.0093 = 2.15

From equation 3

$$ATW = \frac{(\pi)(2.16)(65000)}{(1.25)(120,000)(48)(0.95)} = 0.064$$

DBS = depth below slot

It is desired to keep the density in the core (or yoke) the same as in the teeth since the steel is worked so hard. With a 0.667 pole

enclosure, the flux from 2 teeth flows into the core. Therefore, the core area should be twice one tooth area.

DBS = (2)(0.064) = 0.128

Width of magnet (chordal)

$= (2)\frac{(OD)}{2}\sin(1/2 \text{ the angle subtended by the magnet face at the air gap})$

$= (2)(1.075) \sin 15° = 0.557$

Magnet area = 0.557 x 0.53 = 0.295

a = 0.279

The permanent-magnet rotor design is shown on Figure 8.

$$l = 1.075 - 0.5 - 0.139 = 0.436$$

$$l_1 = \frac{1.279\pi}{16} - 0.139 = 0.112$$

Total magnet length = 0.548

Teeth area = (0.064)(4)(0.53)(0.95) = 0.129

$$\text{Teeth length} = \frac{3.313 - (2)(0.128) - (2.17 + 0.05)}{2} = 0.425$$

$$\text{Circumferential air gap length} = \frac{(\pi)(2.16)(4)}{48} + 0.012 = 0.578$$

The 0.012 is an allowance for fringing flux

= one air gap length

Axial air gap length = 0.53 + 0.03 = 0.56

The 0.03 is an allowance for end fringing = tooth tip length

+ 1/2 (air gap length)

Air gap area = (0.578)(0.56) = 0.324

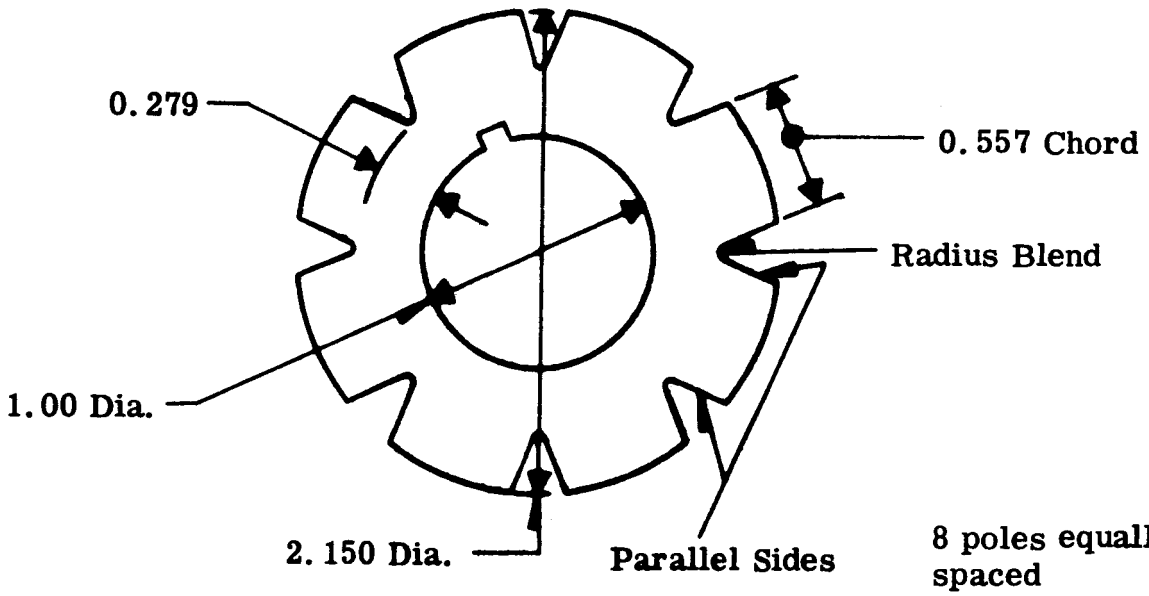

8 poles equally spaced

Material Alnico V

Stack Length 0.53
Skew 3.75°

FIGURE 8. Permanent Magnet Rotor

$\phi = (0.129)(120,000) = 15500$

$$B_{AG} = \frac{15500}{0.324} = 47,900$$

$$\text{Ampere Turns - AG} = \frac{(47,900)(0.012)}{3.19} = 180$$

To calculate the ampere turns required for the stator steel, refer to Figure 5.

AT/in for teeth at 120 Kl/in^2 = 105

Ampere turns - teeth = (105)(0.425) = 45

The mmf required for the core does not change appreciably with position because of the skew. Therefore, for determining the mmf required for the core, the simplest position is used which is that with a centerline between teeth on the center of a magnet pole. Then in the core the flux is zero for 1/2 of a tooth pitch. Then the flux from one tooth flows for a tooth pitch after which it is joined by the flux from 0.962 of a tooth. This combination flows for a tooth pitch after which it is joined by the flux from 0.038 of a tooth. This whole combination flows for 1/2 of a tooth pitch. The fractions of a tooth stem from the skew. Therefore, for a tooth density of 120,000 lines per square inch, the core has a density of zero for 1/2 tooth pitch, 60,000 for one tooth pitch, 118,000 for one tooth pitch and 120,000 for 1/2 tooth pitch.

The ampere turns per inch for three densities are:

Density	AT/in.
120,000	105
118,000	95
60,000	8

Tooth pitch at the average core diameter

$$= \frac{(3.313 - 0.128)\pi}{48} = 0.208$$

Ampere turns - core = 0.208 (52.5 + 95.0 + 8) = 32

Total ampere turns = 180 + 45 + 32 = 257

$$S_f = \frac{257}{180} = 1.428$$

It is estimated that S_f should be between 1.3 and 1.6 so the above value is satisfactory.

The next step is the calculation of the leakage factor for which it is necessary to know the leakage permeance. The leakage permeance is obtained using formulas using the methods of Rotors[1]. See Figure 9 for an identification of the various leakage paths. See Appendix I for derivation of the leakage formulas used below.

$$R = 1.075$$

$$a = 0.279$$

$$\sin\frac{\theta}{2} = \sin 22.5° = 0.383$$

$$c = \frac{0.279}{0.383} = 0.729$$

$$r_2 = 1.075 - 0.729 = 0.346$$

$$r_1 = 0.5 + 0.279 - 0.729 = 0.05$$

$$e = \frac{c}{2} = \frac{0.729}{2} = 0.365$$

$$r_4 = 1.075 - 0.365 = 0.710$$

$$r_3 = 0.5 + 0.279 - 0.365 = 0.414$$

$$C_f = \frac{0.296 + 0.279 + (0.112)(2)}{0.548} = 1.46$$

$$P_3 = \frac{(2)(3.19)(0.53)(8)}{(0.296)(\pi)} \left(0.296 + 0.05 \ln \frac{0.05}{0.346}\right)(1.46)$$

$$= 8.45$$

[1]The superscript number refers to reference numbers in the bibliography.

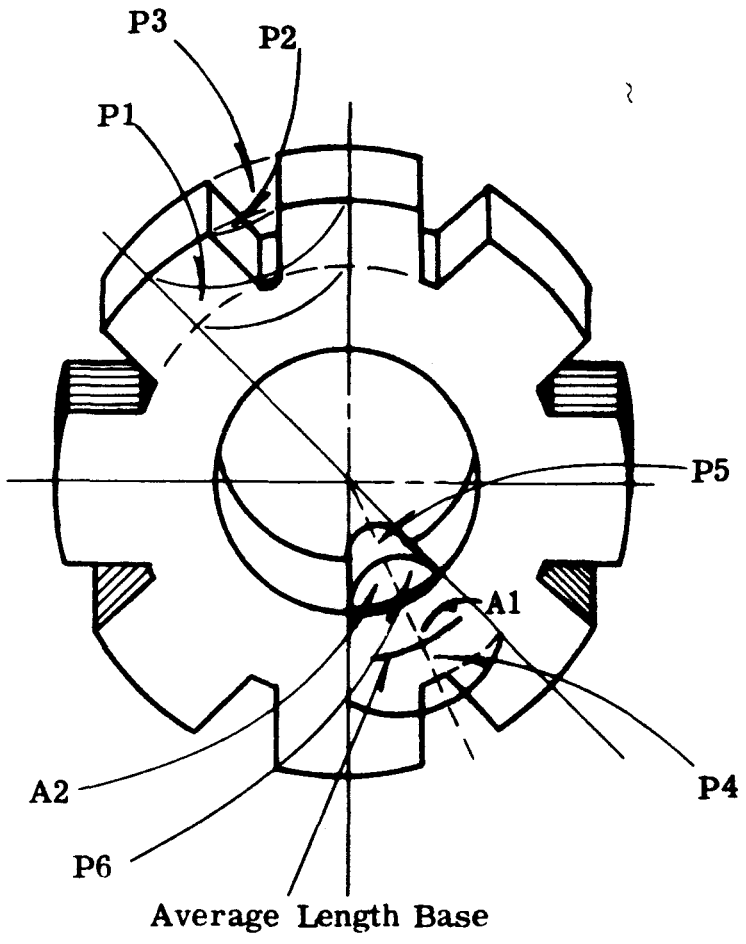

Path

P3 = Path between poles

P2 = Tapered semi-cylinder with pole edges forming locus of ends of the semicircles

P1 = Tapered half-annulus immediately over P2 and with a thickness equal to one-half of a pole width

P4 = Tapered semi-annulus with a center semi-cylinder of zero diameter starting just below P1 and P2 and extending to the ID

P5 = Approximate semi-annulus with a center semi-cylinder of zero diameter in the center of the magnet and running the length of stack

P6 = Approximate shell of a quadrant of a sphere between P4 and P5 having a center quadrant of a sphere of zero diameter

FIGURE 9. Definition of PM Rotor Leakage Paths

$$P_2 = (1.04)(3.19)(0.296)(1.46) = 1.43$$

$$P_1 = \frac{(8)(3.19)(0.279)}{(\pi)(0.296)(0.383)} \left[0.296 + 0.414 \ln \frac{0.414}{0.710}\right] (1.46)$$

$$= 2.1$$

$$P_4 = \frac{(4)(3.19)(0.279)(1.279)}{(8)(0.548)} = 1.04$$

$$P_5 = \frac{(2)(3.19)(0.53)(1)}{(8)(0.548)} = 0.771$$

$$P_6 = \frac{(3.19)(1)^2(\pi)^2}{(4)(8)^2(0.548)} = 0.224$$

$$P_3 + P_2 + P_1 + P_4 + P_5 + P_6 = 14.02$$

Total leakage permeance = P_e = 14.02

+ 10% for paths not considered

= 15.5

Permeance of air gap

$$= \frac{(3.19)(0.324)}{0.012} = 86.2$$

Actual AG permeance = $\frac{86.2}{1.428} = 60.4$

$$L_f = \frac{60.4 + 15.5}{60.4} = \frac{75.9}{60.4} = 1.255$$

Flux in magnet = (1.255)(15500) = 19,460

$$B_m = \frac{19,460}{0.295} = 65,900$$

Ampere turns per inch in magnet

$$= \frac{257}{0.548} = 469$$

This is close enough to the operating point.

One final step in the magnetic design is to verify that a 0.0093 air gap will give a 0.012 effective gap.

Tooth pitch at the air gap

$$= \frac{(2.17)(\pi)}{48} = 0.142 = T_p$$

$$\text{Carter's Coefficient} = \frac{T_p\left[(4.4)(\Delta) + (0.75)(e_s)\right]}{T_p\left[(4.4)(\Delta) + (0.75)(e_s)\right] - (e_s)^2}$$

Where

Δ = single air gap length = 0.0093

e_s = slot opening

$$\text{Carter's Coefficient} = \frac{0.142\left[(4.4)(0.0093) + (0.75)(0.05)\right]}{0.142\left[(4.4)(0.0093) + (0.75)(0.05)\right] - (0.05)^2}$$

$= 1.295$

$(1.295)(0.0093) = 0.0122$

The next step is the design of the winding. The punching has the dimensions shown in Figure 9.

From Figure 9:

ASW = 0.109 = average slot width
b_s = 0.419 = length of tooth

$$GSWA = (ASW)(b_s) - I_T\,(2b_s + 5ASW)$$

Where

GSWA = Slot winding area after insulation has been subtracted except for wire enamel

I_T = Insulation thickness

$$GSWA = (0.109)(0.419) - 0.008\left[(2)(0.419) + (5)(0.109)\right]$$

$$= 0.035$$

The above formula for GSWA is derived empirically from standard practice.

Coil Perimeter = C_p

$$= 2(w) + \frac{2(P_f)(\pi)(D_a)(ACT)}{S_p}$$

Where

P_f = empirical constant

D_a = average diameter of winding

ACT = coil throw in slots

$$D_a = \frac{\text{Pchg OD} - 2\ \text{DBS} + \text{Pchg ID} + 2\ (\text{tooth tip thickness})}{2}$$

$$= \frac{3.313 - 0.256 + 2.22}{2} = 2.64$$

P_f = 1.65 for an 8 pole winding

ACT = 6 slots for a full pitch winding

$$C_p = (2)(0.53) + \frac{2(1.67)(\pi)(2.64)(6)}{48} = 4.52$$

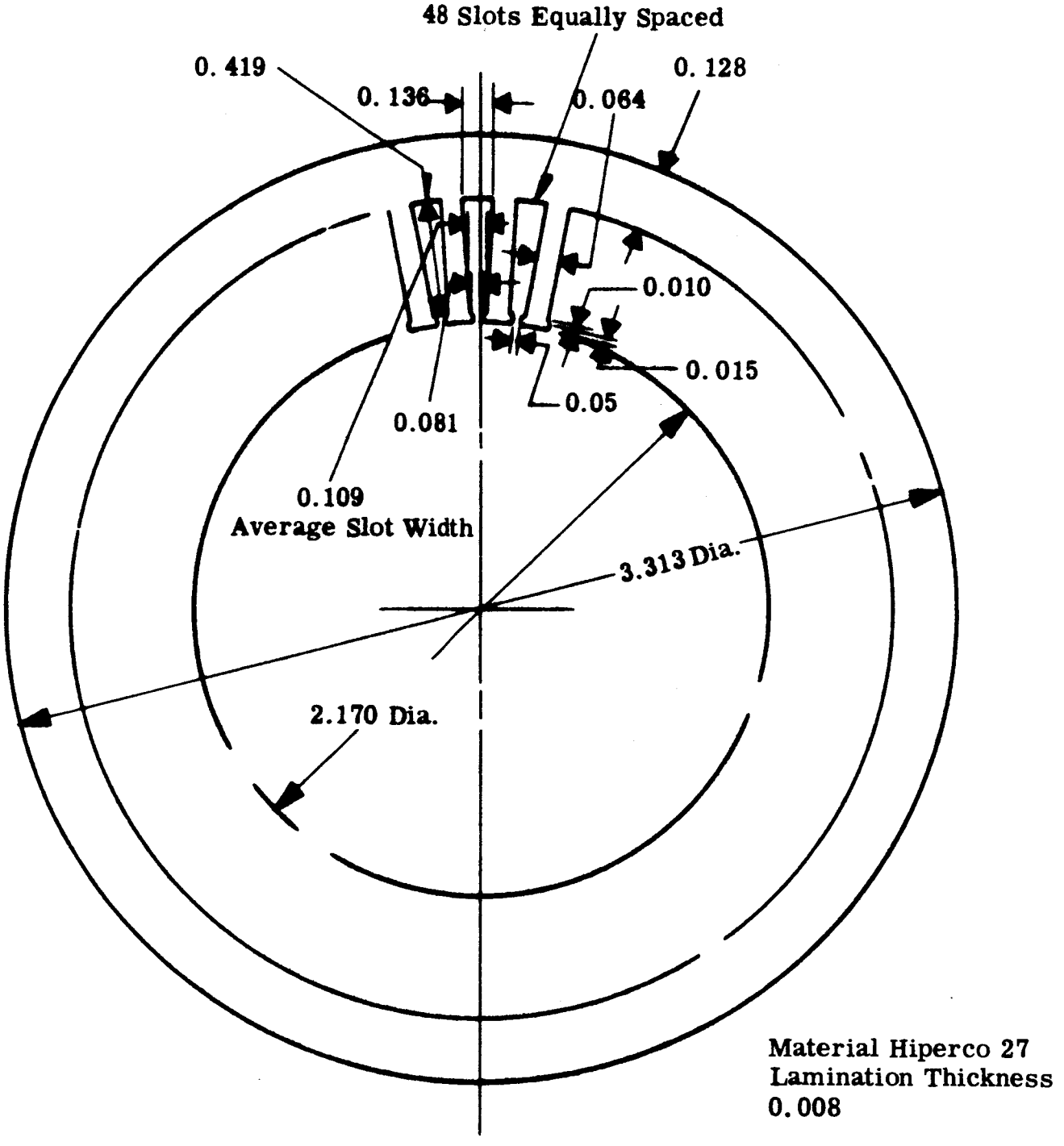

FIGURE 10. Armature Punching

For Connection 1.

$$\text{Rhot} = \frac{(1.2)(1.5)(\text{TPC})(C_p)(S_p)(\Omega)}{3}$$

Where

Rhot = hot resistance of winding

TPC = turns per coil

Ω = Resistance of one inch of wire

In the range of wire sizes that will result, the insulated wire diameter is approximately $(1.175)(D_b)$ where D_b is the bare diameter.

Assume a slot fullness of 0.687 per unit

$$\text{Conductors per slot} = \frac{(0.687)(\text{GSWA})}{(\text{Insulated Dia})^2}$$

$$= \frac{(0.687)(\text{GSWA})}{(1.38)(D_b)^2}$$

$$\text{TPC} = \frac{\text{Cond. per slot}}{2} = \frac{(0.687)(\text{GSWA})}{(2.76)(D_b)^2}$$

$$\Omega = \frac{(0.692)(10^{-6})(4)}{(D_b)^2(\pi)} = \frac{(0.881)(10^{-6})}{(D_b)^2}$$

for copper wire.

$$\text{Rhot} = \frac{(1.8)(0.687)(0.035)(48)(4.52)(0.881)(10^{-6})}{(2.76)(3)(D_b)^4} = 39.5$$

With 40 volts applied and 0.5 volts drop in the switches Rhot must equal 39.5 to obtain one ampere of current.

Solving above for D_b

$$D_b = 0.0126$$

Use No. 28 wire

Ohms per 1000 feet = 66.17 (from wire table)

TPC = 55

Check

$$\text{Rhot} = \frac{(1.8)(4.52)(66.17)(55)(48)}{(3)(12)(1000)} = 39.5$$

$$\text{Zph} = \frac{(55)(48)(2)}{3} = 1760$$

$$Z = (2.05)(1760) = 3610$$

$$\phi = 15,500$$

$$\text{Torque} = \frac{(22.6)(8)(15,500)(3610)(1)(10^{-8})}{1}$$

= 101 oz. in.

The magnet must have a sufficient mmf reserve to withstand armature reaction. The worst armature reaction is at -10°C with 60 volts applied at locked rotor.

Effective Ampere Turns per Pole

$$= (\text{TPC})(2)(1.5)\left(\frac{1.2}{\text{Heat Factor at } -10°\text{C}}\right)\left(\frac{60}{40}\right)$$

The 1.5 is obtained from an mmf plot of the winding. The peak mmf on the same basis is 2 times the conductors per slot.

$$= (55)(2)(1.5)\left(\frac{1.2}{0.865}\right)\left(\frac{60}{40}\right) = 344$$

Changing this to ampere turns per inch in the magnet

$$= \frac{344}{0.548} = 628$$

Total Ampere Turns = 628 + 469

= 1097

This value exceeds the maximum allowed by the assumed operating sub loop. However, if this figure is approached the flux must fall and the ampere turns required for the magnetic circuit must also fall. At the mmf extremity of the curve, B_m = 62,400. If this was assumed to be constant over the whole pole, the new air gap flux would be

$$\frac{62400}{65900}(15,000) = (0.947)(15,500) = 14,700$$

Ampere Turns Air Gap = (0.947)(180) = 170

B_T = (0.947)(120,000) = 113,600

AT/in from Figure 5

= 76

Ampere Turns Teeth = (0.425)(76) = 32

The core ampere turns should remain approximately the same.

Therefore 10 + 13 = 23 ampere turns are saved which are reflected in the magnet as

$$\frac{23}{0.548} = 42 \text{ AT/in}$$

When the above reduction plus the increase in leakage flux resulting from the increased mmf (which would further lower air gap and tooth flux) are considered, the reserve mmf in the magnet is seen to be sufficient to handle armature reaction in the worst case. The actual specification for the magnet was that the demagnetization curve would fall above the point 62.5 kilolines per square inch and 1050 ampere turns per inch. It is possible that, within the limits of manufacture, a magnet with such a minimum demagnetization curve cannot be procured. It is seen, however, that the slope of the assumed sub loop was conservative and that some further reduction in the demagnetization curve could be tolerated if necessary.

A 10 pole motor design was considered. The motor was designed using the same procedure up to the point where leakage permeance was calculated. The sum of P1, P2, and P3 was 23.5. This was considered excessive and the design was not carried further.

The use of a better permanent-magnet material was considered. On Figure 5, the curve for Alnico V-7 is shown with an assumed sub loop. It would appear that the new flux density would be approximately 77 kilolines per square inch, instead of 65 and that the ampere turns per inch at the operating point would be approximately 650 instead of 450.

The magnet length could be reduced to approximately

$$\left(\frac{77}{65}\right)\left(\frac{450}{650}\right)(0.548) = 0.450$$

The OD of the magnet then could be reduced approximately by

$$\frac{0.450}{0.548} = 0.821$$

Since with a constant pole enclosure the magnet area varies with diameter, the actual air gap flux would be

$$\left(\frac{77}{65}\right)(0.821) = \text{approximately the same}$$

The increase in slot length would be approximately

$$0.548 - 0.450 = 0.098$$

The dimension at the bottom of the slot is now 0.081 (See Figure 10). Therefore the increase in winding area would be less than

$$(0.081)(0.098) = 0.008$$

Present GSWA = 0.035

New GSWA will be less than 0.043

$$\text{Per unit increase} = \frac{0.043}{0.035} = 1.23$$

The advantage is reflected in torque as the square root of the increase (with a constant current). Therefore, the per unit increase in torque will be less than

$$\sqrt{1.23} = 1.11$$

This figure will be reduced to less than 1.1 because of increased leakage flux. The same increase could be attained with slightly more than a 10 percent increase in stack length which would amount to an increase of slightly more than 0.053 inches.

The Alnico V-7 material cannot be cast and hence the rotor would have to be fabricated from straight bar magnets. It is felt that the small weight saving due to the reduction in stack length when using the Alnico V-7 would be replaced by the material weight, necessary for fabrication. Therefore, the use of stronger magnetic materials was given no further consideration. The use of a high mmf, low flux density material would lead to impractical design proportions. Therefore, this type of magnet material was eliminated.

The present electrical design of the permanent magnet motor is therefore regarded on the basis of the calculations as being as close to the best that can be attained within the limits imposed. Ripple torque has been minimized in the design as far as possible.

2. Electrical Design of Reluctance Switch

a. General

The voltage output of the reluctance switch will be sensed by a triggering circuit which will not allow current to flow until the voltage reaches a certain level. At that time the signal voltages are applied to the bases of the switching transistors. This triggering on amplitude is necessary to prevent the transistor switches from operating out of saturation. The triggering, therefore, requires a high reluctance-switch secondary voltage to obtain this discrimination.

From the size and sensitivity of the electronic components, it was concluded that the secondary reluctance-switch voltage has to be approximately 9 volts on a square wave. The current draw, taking into account the filtering of the output, has to be approximately 30 milliamps per secondary at 9 volts.

The switching time of some of the electronic components limits the frequency of the oscillator drive for the reluctance switch to approximately 5000 cycles per second. This frequency also approaches the limit for available magnetic steels from a reasonable core loss standpoint.

The design of the oscillator for the reluctance switch is such that a 28 volt (0-to-peak) square wave with a fundamental frequency of 5000 cps is applied to the primary winding of the reluctance switch. The primary of the reluctance switch must be center-tapped to work with the oscillator.

The punchings, both rotor and stator, are shown on Figure 11. The primary winding is placed around the portions of the stator punching without teeth and is center-tapped. There are 6 required secondary windings. These are wound around each tooth. The windings around diametrically opposite teeth are connected in series to form one winding.

In operation, with the primary excited, the two halves of the primary winding are connected in opposition so that flux is driven through the teeth. Flux flows only through the teeth that are lined up with the rotor poles and a voltage is generated only in the secondary windings on those teeth.

The rotor is fastened to the shaft of the main motor and thus the position of the main motor shaft is sensed by the reluctance switch. The position is determined by the voltages generated in the secondary windings. It is desirable that the voltages in the secondary windings build up to approximately 65 percent of the final voltage before the triggering circuit allows use of the voltage. The symmetrical placement of the teeth would give a zero voltage at the desired switching time if the rotor poles were made two stator slot pitches wide. Tests made on a crude preliminary reluctance switch with rotor poles two stator slot pitches wide indicated that the pole width should be increased approximately 28.5 percent over two slot pitches for the voltage to obtain 65 percent of the final value at the desired switching time. This was done in this punching design.

The punching design shown was arrived at mainly from mechanical limitations. The steel thicknesses approach the minimum allowable section for punching. The rotor ID was determined by the necessary shaft diameter. The stator OD had to allow enough room for primary winding clearance. The ID of the stator was a matter of judgement. It is a compromise between the need for secondary winding space and the need for minimizing leakage permeance.

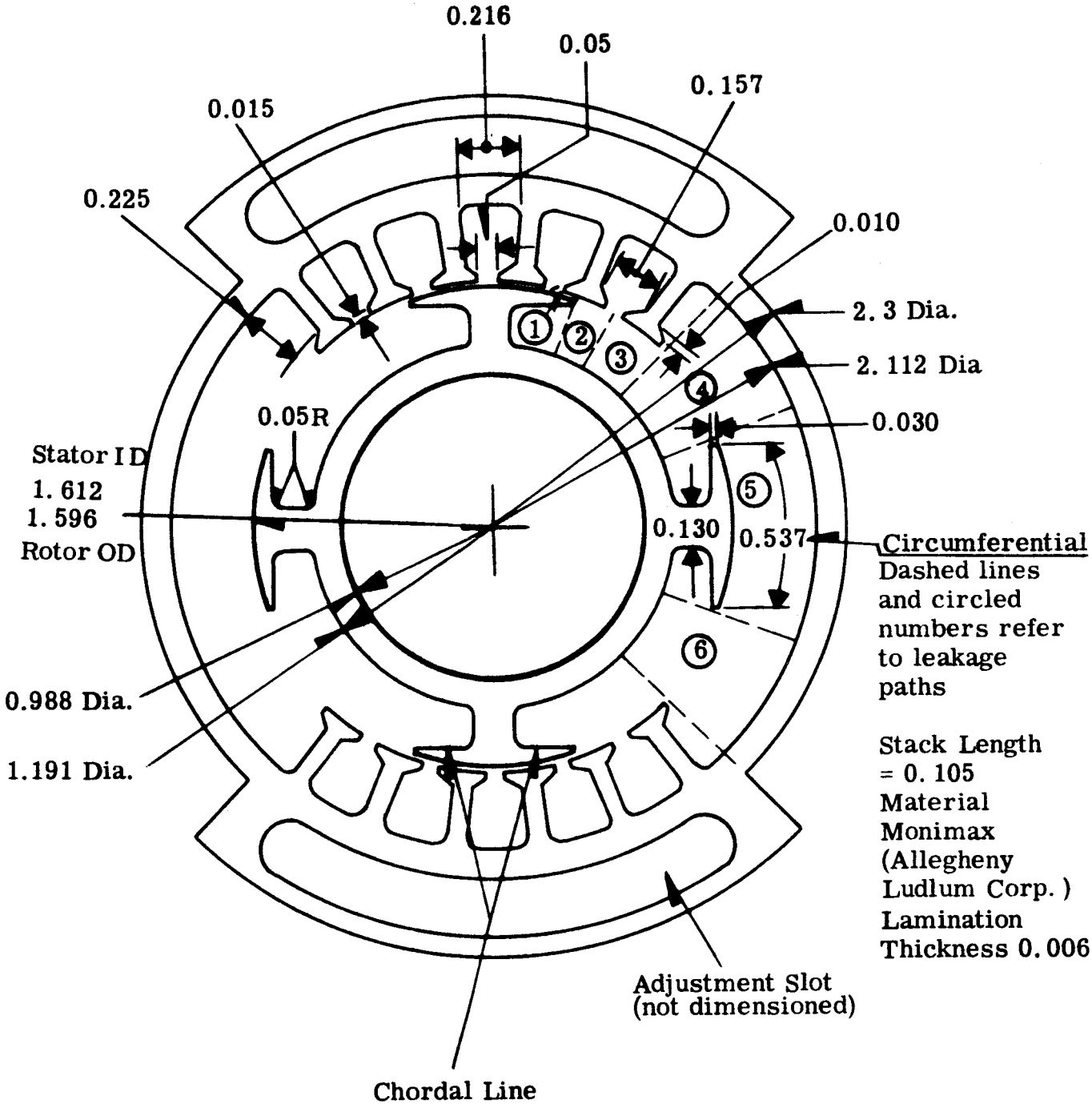

FIGURE 11. Reluctance Switch Punchings and Leakage Paths

The stack length was judged to be the minimum practical to avoid large errors due to misalignment.

The steel chosen for the reluctance switch is Monimax. Monimax is a trade name for a steel made by Allegheny Ludlum. It is especially made for high frequency applications having low core loss and low maximum flux density. The steel must be worked below 50 kilolines per square inch to avoid saturating the steel. A lamination thickness of 6 mils was chosen. It was felt that mechanical difficulties would be experienced with a thinner lamination with such a short stack length.

Heavy build ML enamelled wire was chosen for the primary winding and triple build for the secondary. It has been found necessary in small motors to use a triple build ML enamelled wire when smaller than a Number 29 wire is used.

b. Electrical Design

The electrical circuit will be solved on the basis that 2 secondary windings are excited and drawing current. The midpoint of this situation will be with a rotor pole centered under two teeth as shown in Figure 11. Only the two secondary windings are excited, so that a flux flowing in any other tooth is regarded as leakage flux.

The first step in the design is the calculation of leakage permeance. As shown in Figure 11, the leakage paths are divided into 5 sections.

Path 1

$$\text{Tooth Pitch} = \frac{\pi(1.612)}{24} = 0.211$$

(refer to Figure 11 for dimensions)

Air gap = 0.008 = Δ

$$\text{Carter's Coefficient} = \frac{T_p\left[(4.4)(\Delta) + (0.75)(e_s)\right]}{T_p\left[(4.4)(\Delta) + (0.75)(e_s)\right] - (e_s)^2}$$

$$= \frac{0.211\left[(4.4)(0.008) + (0.75)(0.05)\right]}{0.211\left[(4.4)(0.008) + (0.75)(0.05)\right] - (0.05)^2}$$

$$= 1.194$$

Effective Air Gap = L = (1.194)(0.008)

= 0.00955

Stack Length = 0.105

Circumferential Length of Leakage Path 1

$$= \frac{(0.285)(\pi)(1.604)}{(24)} + 0.010 = 0.0698$$

(0.285 is additional pole width over 2 slot pitches)
(1.604 is the average air gap diameter)
(0.010 is an allowance for fringing at the pole tips)

Area of Leakage Path 1 = (0.0698)(0.105) = 0.00733

Allowance for fringing at the ends of the stack:

$$P = \frac{(3.19)(0.26)(0.0698)}{1.194} = 0.05$$

= Rotor's formula for a half cylinder divided by Carter's Coefficient to approximately allow for slot openings.

$$P = \frac{(3.19)(0.0698)}{1.194\,\pi} \ln \left(1 + \frac{0.040}{0.008}\right) = 0.11$$

= Rotor's formula for a half annulus. The 0.040 is 2 times the average tooth tip thickness. Again the formula is divided by Carter's Coefficient as an approximate allowance for slots.

$$\text{Main } P_1 = \frac{(3.19)(0.00733)}{0.00955} = 2.44$$

Total P_1 = 2.44 + 0.05 + 0.11 = 2.60

<u>Path 2</u>

$$\text{Average Diameter} = \frac{1.612 + 1.191}{2} = 1.402$$

$$\text{Area} = \frac{(2 - 0.285)(1.402)(\pi)(0.105)}{24} = 0.033$$

$$\text{Length} = \frac{1.612 - 1.191}{2} = 0.211$$

$$P_2 = \frac{(3.19)(0.033)}{0.211} = 0.499$$

Path 3

Circumferential Length of Path

$= 2 - 0.285 = 1.715$ slot pitches

$$\text{Average Diameter} = \frac{2.112 + 1.191}{2} = 1.651$$

$$\text{Area} = \frac{(1.715)(1.651)(\pi)(0.105)}{24} = 0.0389$$

$$\text{Length} = \frac{2.112 - 1.191}{2} = 0.461$$

$$P = \frac{(3.19)(0.0389)}{0.461} = 0.269$$

P is not completely effective

P occupies 1.715 slot pitches

Total slot pitches = 6

P averages 0.857 slot pitches less than fully effective

$$P_3 = \left(\frac{6 - 0.857}{6.00}\right)(0.269) = 0.231$$

Path 4

P_4 occupies 2.57 tooth pitches

$$\text{Average Diameter} = \frac{2.112 + 1.596}{2} = 1.854$$

$$\text{Area} = \frac{(2.57)(1.854)(\pi)(0.105)}{24} = 0.0655$$

$$\text{Length} = \frac{2.112 - 1.596}{2} = 0.258$$

$$P = \frac{(3.19)(0.0655)}{0.258} = 0.81$$

P is only half effective

$P_4 = 0.41$

<u>Path 5</u>

$$P_5 = P_3 \left(\frac{0.857}{6}\right) = 0.033$$

Total of Paths

$= 2.60 + 0.499 + 0.231 + 0.41 + 0.033$

$P_{1p} = 3.77$ = total primary leakage permeance for half the magnetic circuit

Slot Leakage (See Figure 12)

$$\frac{a_1}{a_2} = \frac{0.164}{0.216} = 0.76$$

$\phi_s = 0.433$

$$K_s = (0.433)\ \frac{0.225}{0.216} + \frac{0.015}{0.050} + \frac{0.020}{0.214} = 0.844$$

$P = (3.19)(0.844)(0.105) = 0.283$

Average Slot Width = 0.190

Slot Length = 0.225

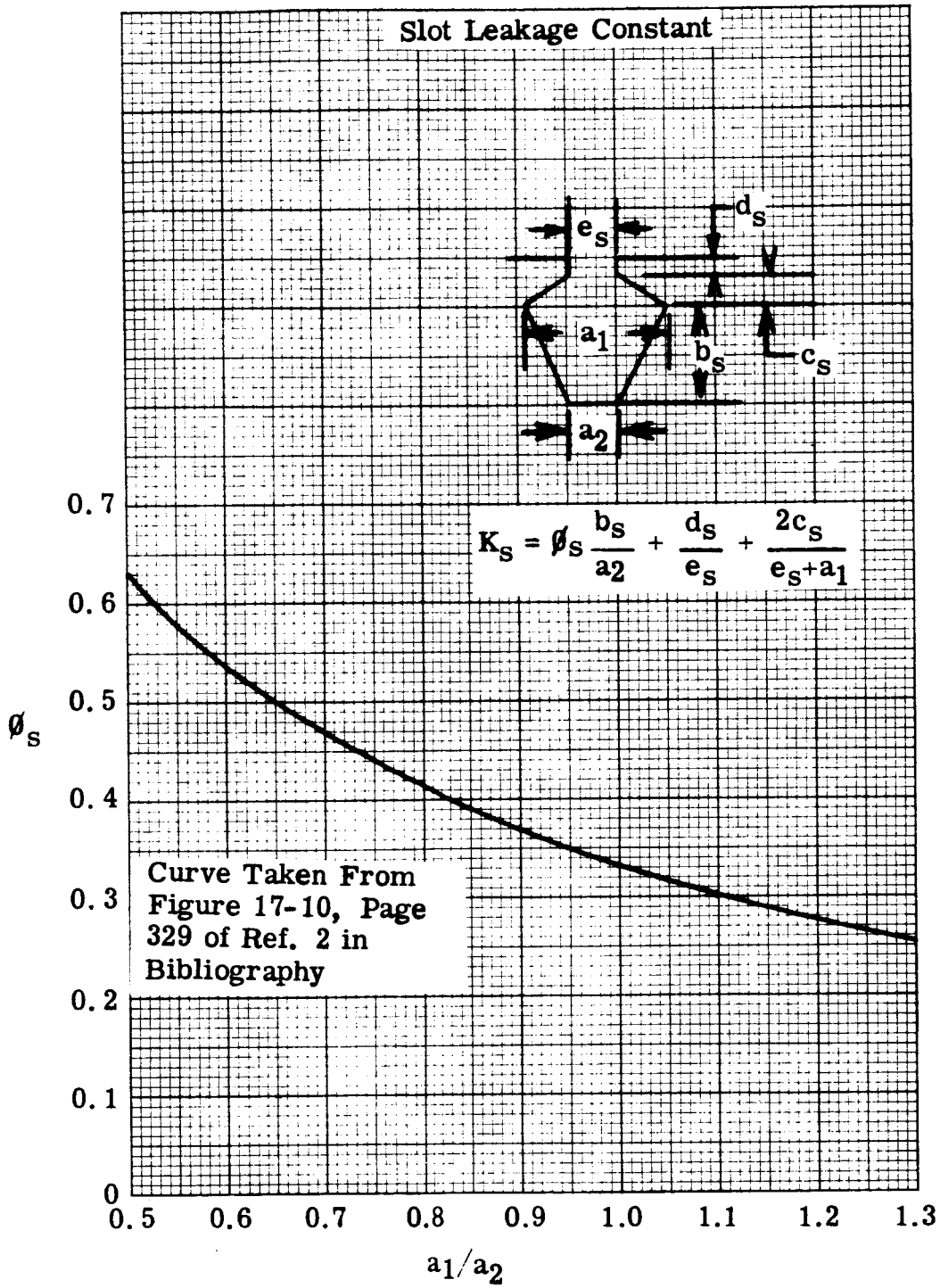

FIGURE 12. Slot Leakage Constant

$$\text{Average Permeance} = \frac{(3.19)(0.225)(0.105)}{0.190} = 0.396$$

For a semi-cylinder from one tooth to the next using Rotor's formula.

$$P = (3.19)(0.26)(0.225) = 0.374$$

For a semi-annulus from the edge to the center of one tooth to the edge to center of the next using Rotor's formula.

$$P = \frac{(3.19)(0.64)(0.225)(2)}{\frac{0.190}{0.03} + 1} = 0.125$$

Total average $P = 0.125 + 0.374 + 0.396 = 0.895$

$$\frac{0.895}{0.396} = 2.26 \text{ allowance for end fringing}$$

Total P_{sl} = total slot leakage = $(2.26)(0.283) = 0.64$

<u>Mutual Path</u>

$$\text{Mutual Permeance} = \frac{3.19 \text{ Area}}{\text{Length}} = P_{pm}$$

Area = (2 slot pitches)(stack length) + fringing

$$\frac{(2)(1.604)(\pi)}{24}\left(\frac{2.60}{2.44}\right)(0.105) = 0.0468$$

The $\frac{2.60}{2.44}$ is the same allowance for fringing as was used for leakage path 1.

$$P_{pm} = \frac{(3.19)(0.0468)}{0.00955} = 15.65$$

A diagram of the equivalent circuit (with final circuit values) for the reluctance switch is shown in Figure 13. The dotted line can be eliminated in the circuit because of symmetry.

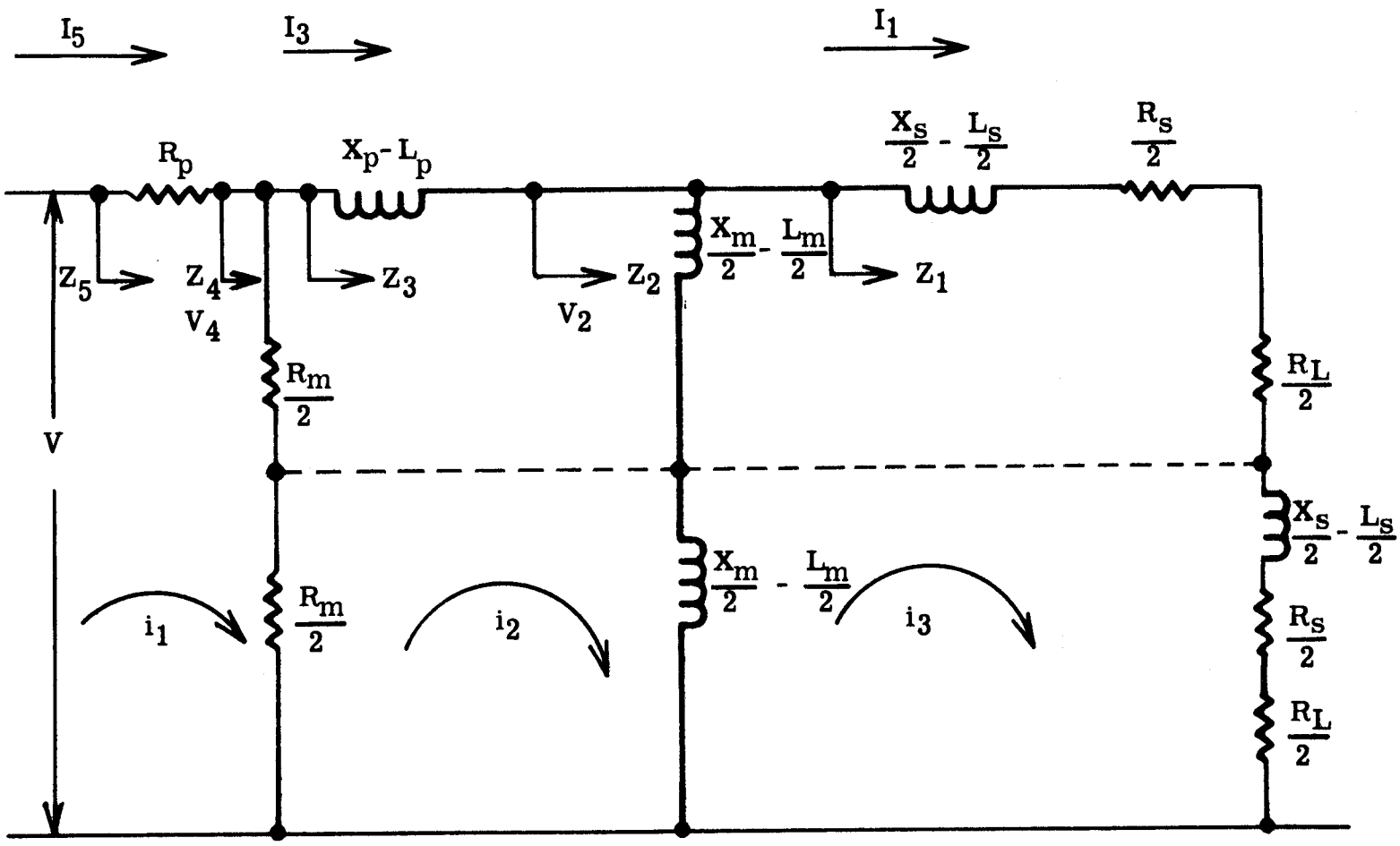

Final Values

$R_p = 2.0$	$L_p = 0.00763$	$L_m = 0.01588$	$L_s = 0.00775$
$R_m = 921$	$X_p = 239$	$X_m = 499$	$X_s = 243$
$P_p = 3.77$	$P_m = 7.83$	$P_s = 3.83$	$R_s = 19.4$
			$R_L = 600$

FIGURE 13. Equivalent Circuit For Reluctance Switch

An electrical circuit which is analogous to the magnetic circuit for the primary is shown in Figure 14. (Using the principal of superposition, the primary and secondary magnetic circuits can be handled separately.)

In the circuit

$P_{pm} = 15.65, \; 2P_{lp} = 7.54$

$P_{pm} = 2P_{lp} = 23.19$

Adding the two series permeances (which add like resistances in parallel) gives a total of 11.6.

P_p = Primary leakage permeance (series equivalent)

$$= \left(\frac{7.54}{23.19}\right)(11.6) = 3.77$$

P_m = Mutual permeance (series equivalent)

$= 11.6 - 3.77 = 7.83$

An electrical circuit which is analogous to the magnetic circuit for the secondary is shown in Figure 15a. Using the principle of superposition, this can be regarded as the sum of the two circuits shown in Figure 15b. If one circuit is solved for I_{lp} and I_m, the values can be multiplied by two. In the following, refer to Figure 15 for symbol definitions.

$$P_b = \frac{P_{pm}}{2} + 2P_{lp}$$

$$I_T = \frac{V\left(\frac{P_{pm}}{2}\right)\left(\frac{P_{pm}}{2} + 2P_{lp}\right)}{P_{pm} + 2P_{lp}}$$

$$V_b = \frac{I_T}{P_b} = \frac{V\left(\frac{P_{pm}}{2}\right)}{P_{pm} + 2P_{lp}}$$

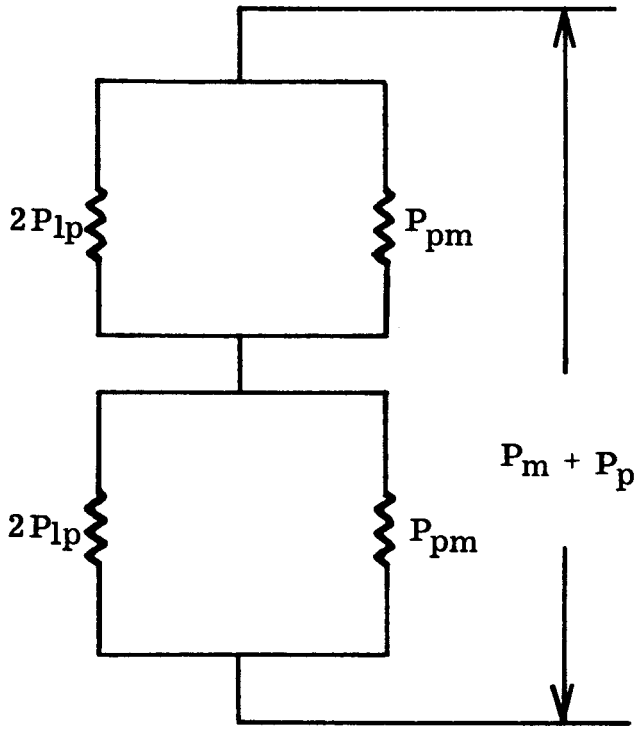

FIGURE 14. Primary Permeance Equivalent Circuit

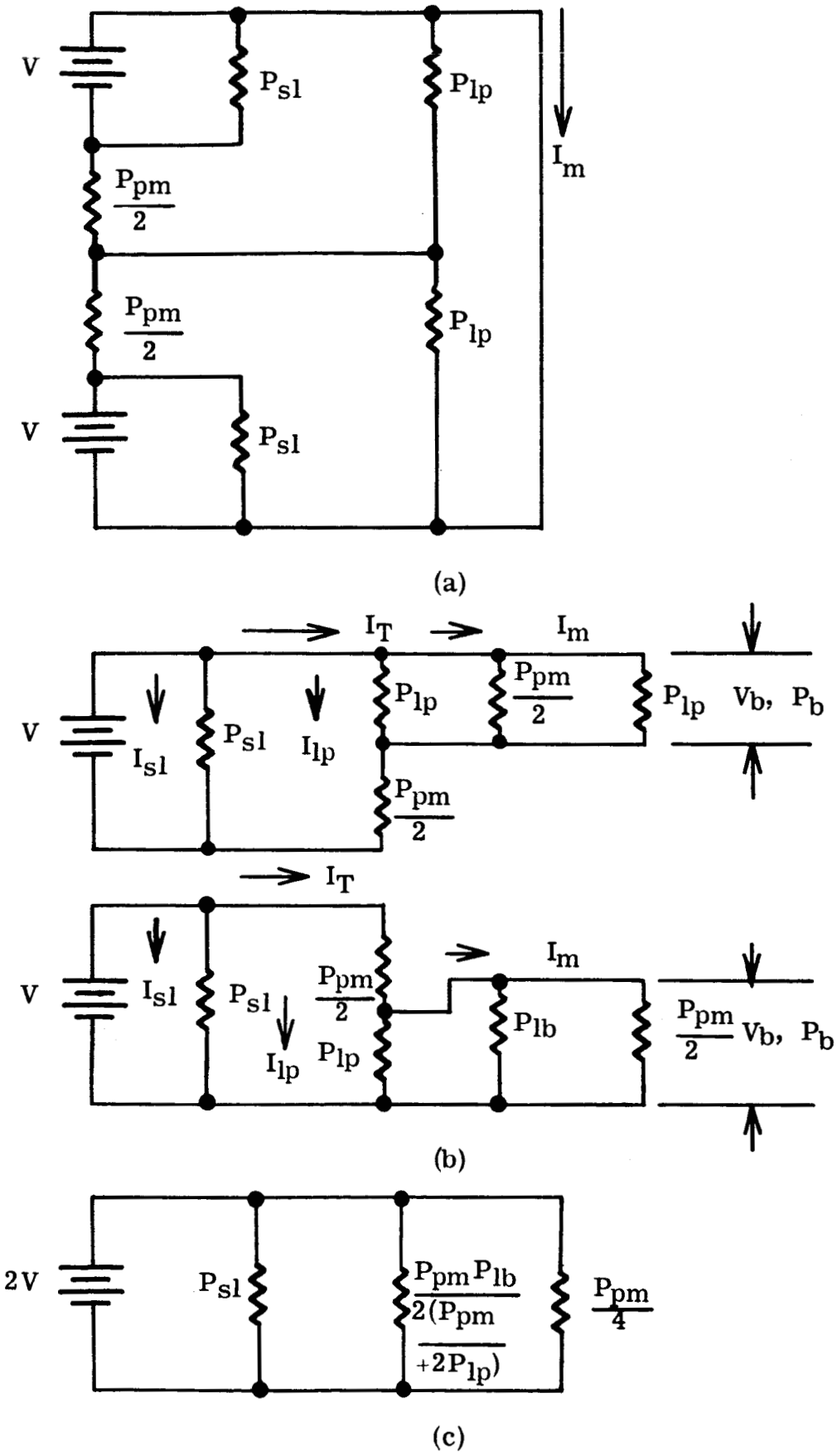

FIGURE 15. Secondary Permeance Equivalent Circuits

$$I_m = V_b \left(\frac{P_{pm}}{2} + P_{lp}\right)$$

$$= \frac{V\left(\frac{P_{pm}}{2}\right)\left(\frac{P_{pm}}{2} + P_{lp}\right)}{P_{pm} + 2P_{lb}} = \frac{V(P_{pm})}{4}$$

$$I_{lp} = (V_b)(P_{lp}) = \frac{(V)\left(\frac{P_{pm}}{2}\right)(P_{lp})}{P_{pm} + 2P_{lp}}$$

$$I_{lp} = \frac{(V)(P_{pm})(P_{lp})}{2(P_{pm} + 2P_{lp})}$$

$$I_{sl} = V(P_{sl})$$

In the analogy I_{sl} and I_{lp} correspond to leakage fluxes and I_m corresponds to flux that links the primary. These currents are half the total but the half circuits are driven by the mmf from only one tooth winding whereas in the total equivalent circuit, 2 opposite teeth windings form the secondary. Therefore, the circuit may be replaced by one as shown in Figure 15c. The total series permeance of the circuit is then

$$\frac{P_{pm}}{4} + \frac{P_{pm}\,P_{lp}}{2(P_{pm} + 2P_{lp})} + P_{sl}$$

The total series equivalent leakage permeance is

$$\frac{(P_{pm})(P_{lp})}{2(P_{pm} + 2P_{lp})} + P_{sl}$$

$$= \frac{(15.65)(3.77)}{2\,(23.19)} + 0.64 = 1.914$$

The mutual permeance $= \frac{15.65}{4} = 3.91$

These are for only one of the two secondary windings. Therefore,

$P_m = (2)(3.91) = 7.83$

$P_s = (2)(1.914) = 3.83$

Published data for 6 mil Monimax Steel shows that the core loss varies as the 1.71 power of the flux density at 5000 cycles per second. The core loss data for the steel gives 26 watts per pound for the core loss at 6 kilogauss or 38.7 kilolines per square inch. To take into account various punching stresses and high flux density areas, it is customary to multiply the value from the curve by a factor to make it agree empirically with what will occur in punchings like those used in motors. In this case the factor used was 1.92 giving a core loss of 50 watts per pound at a density of 38.7 kilolines per square inch.

ATW = 0.060
Stator teeth density = B_T
Rotor tooth width = 0.130

Each rotor tooth handles the flux from approximately

$(2)\left(\frac{7.83+2.6}{7.83}\right)$ stator teeth because of the 28.5 percent increase in rotor pole width over 2 slot pitches. Therefore

$$\text{Rotor Tooth Density} = \frac{(2)(0.060)(1.33)(BT)}{0.130}$$

$= 1.235\ B_T$

Rotor Core Thickness = 0.102

$$\text{Rotor Core Density} = \left(\frac{0.130}{0.102}\right)(0.5)(1.33)(BT)$$

$= 0.846\ B_T$

$$\text{Stator Core Thickness} = \frac{2.3 - 2.112}{2} = 0.094$$

The stator core and rotor core density would vary over the length because of leakage. However, for the purposes of this approximate analysis, the flux from 1.33 teeth are assumed to flow for the entire length of the core.

$$\text{Stator Core Density} = \frac{0.060}{0.094} \times 1.33\ B_T$$

$$= 0.85\ B_T$$

The weights of the various parts of the magnetic circuit as calculated from the dimensions of the punching and stack length assuming a density of 0.286 pounds per cubic inch and a stacking factor of 0.9 are as follows:

Stator Tooth Weight

$$= (0.225)(0.060)(0.105)(0.9)(0.286)(4) = 0.00146$$

Rotor Teeth Length = 0.325 approximately

Rotor Tooth Weight

$$= (0.325)(0.130)(0.105)(0.90)(0.286) = 0.00114$$

Rotor Core Weight

$$= \frac{\pi}{4}(1.191^2 - 0.988^2)(0.105)(0.9)(0.286) = 0.00944$$

Stator Core Weight

$$= \frac{\pi}{4}(2.3^2 - 2.112^2)(0.105)(0.9)(0.286) = 0.0176$$

Total core loss based on a fundamental sinusoid

$$= (50)\ \frac{B_T}{38.7}^{1.71}\Big[0.00146 + 0.00114\,(1.235)^{1.71} + 0.00944\,(0.846)^{1.71}$$

$$+ 0.0176\,(0.85)^{1.71}\Big]$$

$$= (50)(0.0017)(B_T^{1.71})\ (0.00146 + (0.00114)(1.435)$$

$$+ (0.00944)(0.751) + (0.0176)(0.757)$$

$$= 0.086\, B_T^{1.71}(0.00146 + 0.00164 + 0.00709 + 0.0133)$$

$$= 0.086\, B_T^{1.71}(0.02349) = 0.00202\ B_T^{1.71}$$

For a core loss of 0.642

B_T = 29 kilolines per square inch

This density is the peak flux density in the teeth. The peak flux in one tooth is

(29)(Tooth Area)

$$= (42)(0.060)(0.105)(0.9) = 0.1645 \text{ kilolines}$$

The peak flux in the core is equal to the ratio of the total permeance to the mutual permeance times this value.

$$= \left(\frac{11.6}{7.83}\right)(0.238) = 0.243$$

Assuming the primary resistance is negligible in the circuit, the number of turns in the primary needed to drive this flux can be calculated using the basic transformer equation.

$$N_p = \frac{(22.5)(10^6)(\text{Effective Fundamental Voltage})}{(\text{Frequency})(\text{Peak Flux})}$$

$$= \frac{(22.5)(10^6)(24.3)}{(5000)(0.243)} = 450$$

Therefore, there will be 450 turns per side for the primary.

Depth of the primary slot = 0.225
The slot is 6 slot pitches wide

$$\text{Total Area} = \left(\frac{1}{4}\right)\left(\frac{\pi}{4}\right)\ (2.112^2 - 1.662^2) = 0.334$$

$$\text{Insulation Area} = \left[\frac{2.112\pi}{4} + (2)(0.225)\right] 0.01 = 0.021$$

0.01 is the thickness of the insulation

Net Area = 0.334 - 0.021 = 0.313

Use Number 25 wire for the primary

$$D^2 = \frac{0.313}{450} = 0.000695 \text{ available}$$

D^2 of #25 = 0.000424

$$\text{Slot Fullness} = \frac{0.000424}{0.000695} = 0.61$$

Assume that the width of one side of the primary coil cannot exceed the slot depth which is 0.225. Since the width of the core is 0.094 and the stack length is 0.105, the dimensions of the coil are known. Allowing 0.115 for clearance on two sides

$$\text{Length Mean Turn} = 2\left[0.225 + 0.105 + 0.225 + 0.094 + 0.115\right] = 1.538$$

Using a heat factor of 1.05

Rphot = hot primary resistance

$$= \frac{(1.05)(1.538)(450)(33)}{(12)(1000)} = 2.0 \text{ ohms}$$

For the secondary slot, the average slot width is 0.190; the slot depth is 0.225. Using an insulation thickness of 8 mils, the slot area

$$= (0.190)(0.225) - 0.008\left[(3)(0.225) + (2)(0.190)\right]$$

$$= 0.0344$$

Only half of this is available giving

Slot Area = 0.0172

The length mean turn is equal to

$$2\left[\frac{0.190}{2} + 0.060 + \frac{0.190}{2} + 0.125 + 0.105\right] = 0.964$$

where

0.060 = ATW

0.125 = 2 times the clearance per side

0.105 = stack length

$\frac{0.190}{2}$ = 1/2 of the average slot width

Ohms per inch for copper

$$= \frac{(0.881)(10^{-6})}{D_b^2}$$

where

D_b = bare diameter of wire

Assume N_2 turns per tooth and a 0.70 full slot.

$(\text{Insulated Diameter})^2 = 1.3D_b^2$ approximate.

$$\frac{(0.7)(0.0172)}{N_2} = 1.3D_b^2$$

$$D_b^2 = \frac{(0.7)(0.0172)}{1.3N_2}$$

$$\text{Rshot} = \frac{(1.05)(N_2)(0.881)(10^{-6})(0.964)(2)}{D_b^2}$$

for the winding on two teeth.

Substituting for D_b^2

$$R_s = 0.0001926N_2^2$$

$$\text{The turns ratio} = T = \frac{\text{Primary turns}}{\text{Secondary turns}}$$

$$= \frac{450}{2N_2} \quad (N_2 \text{ is the turns around one tooth})$$

Rshot referred to the primary

$$= \left(\frac{450^2}{4N_2^2}\right)(0.0001926)(N_2^2) = 9.74$$

The total secondary resistance is 2 times this

$$R_s = 19.4$$

$$R_m = \frac{24.3^2}{0.642} = 921$$

$$\text{Load Resistance} = \frac{9 \text{ volts}}{0.03 \text{ amps}} = 300 \text{ ohms}$$

For two circuits and referred to the primary

$$R_L = 600T^2$$

Therefore all the permeances and resistances for the circuit have been calculated. Inductances are related to the permeances by the turns squared

$$L_p = (450)^2(P_p)(10^{-8}) = (450)^2(3.77)(10^{-8}) = 0.00763$$

$$L_m = (450)^2(P_m)(10^{-8}) = (450)^2(7.83)(10^{-8}) = 0.01588$$

L_s referred to the primary

$$= \left(\frac{450}{N_2}\right)^2 (N_2)^2(P_s)(10^{-8}) = (450)^2(3.83)(10^{-8}) = 0.00775$$

$$X_p = 2(\pi)(5000)\ L_p = (31,400)(0.00763) = 239$$

$$X_m = (31,400)(0.01588) = 499$$

$$X_s = (31,400)(0.00775) = 243$$

All the constants of the equivalent circuit have thus been calculated. These constants are shown in Figure 13. The steady state solution of the circuit is given below for an assumed turns ratio of 1.

Several iterations on the turns ratio showed that the most optimum turns ratio is approximately 1. The solution is for a fundamental sine wave only.

$$Z_1 = 619 + j\,243 = 666 \angle 21.4$$

$$Z_2 = \frac{(666 \angle 21.4)(499 \angle 90)}{619 + j\,742} = 344 \angle 61.2$$

$$= 166 + j\,302$$

$$Z_3 = 166 + j\,302 + j\,239 = 166 + j\,541$$

$$= 566 \angle 72.97$$

$$Z_4 = \frac{(566 \angle 72.97)(921 \angle 0)}{921 + 166 + j\,541} = 430 \angle 46.5$$

$$= 296 + j\,312$$

$$Z_5 = 298 + j\,312 = 431 \angle 46.3$$

$$I_5 = \frac{24.3 \angle 0}{431 \angle 46.3} = 0.0564 \angle -46.3$$

$$\text{Peak } I_5 = \left(\sqrt{2}\right)(0.0564) = 0.080$$

$$I_5 R_p = 0.1128 \angle -46.3 = 0.078 - j\,0.0815$$

$$V_4 = 24.22 \angle 0$$

$$I_3 = \frac{24.22 \angle 0}{566 \angle 72.97} = 0.0428 \angle -72.97$$

$$I_3 X_p = (0.0428 \angle -72.97)(239 \angle 90) = 10.24 \angle 17.03$$

$$= 9.8 + j\,3.0$$

$$V_2 = 14.42 - j\,3.0 = 14.7 \angle -11.78$$

$$I_1 = \frac{14.7 \angle -11.78}{666 \angle 21.4} = 0.0221 \angle -33.18$$

$= 0.0312$ peak

The above steady state analysis shows that the design is close to that desired. To actually show what the secondary current is, it is necessary to make a transient analysis. Since only the secondary current is of interest, it should be sufficient to make the analysis only over the initial half-cycle. There will be an initial transient exciting current, but this should not affect the secondary appreciably.

In the following, the equations use common differential equation notation. The Laplace transform is used for solution.

(See Figure 13.)

Write loop equations using Kirchof's law.

$$V - i_1 R_p - (i_1 - i_2) R_m = 0 \tag{1}$$

$$(i_2 - i_1) R_m + \frac{L_p di_2}{dt} + \frac{L_m di_2}{dt} - \frac{L_m di_3}{dt} = 0 \tag{2}$$

$$L_m \frac{di_3}{dt} - L_m \frac{di_2}{dt} + L_s \frac{di_3}{dt} + (R_s + R_L) i_3 = 0 \tag{3}$$

Solving Equations (1) and (2) simultaneously

$$(L_p + L_m) \frac{di_2}{dt} - L_m \frac{di_3}{dt} + i_2 \left(\frac{R_m R_p}{R_p + R_m} \right) - \frac{V R_m}{R_p + R_m} = 0 \tag{4}$$

Using Laplace transforms with initial conditions of everything zero at $t = o$.

$$(L_p + L_m) s F_2(s) - L_m s F_3(s) + F_2(s) \left(\frac{R_m R_p}{R_p + R_m} \right) - \frac{V R_m}{s R_p + R_m} = 0 \tag{4}$$

$$- L_m s F_2(s) + (L_m + L_s) s F_3(s) + (R_s + R_L) F_3(s) = 0 \tag{3}$$

Solving the two equations simultaneously for F3(s), the following is obtained:

$$F_3(s) = \left[\frac{L_m V R_m}{(L_p + L_m)(L_m + L_s)(R_p + R_m) - L_m^2(R_p + R_m)}\right]$$

$$\left[\frac{1}{s^2 + \frac{\left[(L_p + L_m)(R_p + R_m)(R_s + R_L) + (L_m + L_s)R_m R_p\right] s}{\left[(L_p + L_m)(L_m + L_s)(R_p + R_m) - L_m^2 (R_p + R_m)\right]} + \frac{(R_s + R_L)R_m R_p}{(L_p + L_m)(L_m + L_s)(R_p + R_m) - L_m^2(R_p + R_m)}}\right]$$

$$P_3(s) = \left[\frac{L_m V R_m}{a_3}\right] \left[\frac{1}{s^2 + a_4 s + a_5}\right]$$

where

a_3, a_4, and a_5 have the meaning indicated by their substitution.

Solving and taking inverse transforms

$$i_3 = \frac{L_m V R_m}{a_3} \left[\frac{e^{-\left(\frac{a_4}{2} - \sqrt{\frac{a_4^2}{4} - a_5}\right)t} - e^{-\left(\frac{a_4}{2} + \sqrt{\frac{a_4^2}{4} - a_5}\right)t}}{2\sqrt{\frac{a_4^2}{4} - a_5}}\right]$$

Substituting in values

$a_3 = 0.281$
$a_4 = 47,600$
$a_5 = 4.06\,(10^6)$

$$\frac{a_4}{2} = 23,800$$

$$\sqrt{\frac{a_4^2}{4} - a_5} = 23,700$$

$$L_m V R_m = 410$$

At 5000 cps, one-half period equals 0.0001 seconds.

$$i_3 = \frac{410}{(0.281)(23,700)2}\left[\frac{e^{+2.37} - e^{-2.37}}{e^{2.38}}\right] = 0.0302$$

Solution at other times shorter than 0.0001 seconds indicates that this current rises steeply to start. Thus, it approaches a square wave. It is thus seen that the design is adequate for the output desired.

It is desired to obtain an estimate of the peak input current after the initial transient. To do this, assume that the resistances of the circuit remain constant for the third harmonic.

The total impedance of the circuit to the third harmonic

$$= 692 \angle 31.2$$

Third harmonic voltage = 8.1

$$\text{Third harmonic current peak} = \frac{(\sqrt{2})(8.1)}{692}$$

$$= 0.0165$$

Assume the peak third and the peak fundamental add giving:

Peak input current = 0.080 + 0.0165 = 0.097

Therefore the calculations indicate that the reluctance switch as designed will deliver the 0.03 amps per secondary winding at 9 volts with a peak input of 0.097 amps. The calculations are necessarily approximate. However, considerable variation in the reluctance switch can be tolerated by the control circuit.

3. Mechanical Design of Rotating Package

A cross-sectional view of the design is shown in Figure 16. The external dimensions are shown in Figure 17. It is necessary for the functioning of the device that the rotating field of the PM motor be mounted to the same shaft as the rotors of the reluctance switches. It would ordinarily be necessary in the construction to keep track of the placement of the various phases in the PM armature, the location of the PM rotor in relation to the reluctance switch rotors, the relation of the reluctance switch stator to the PM armature, the relation of the reluctance switch secondaries to the control power bridge, and the relation of the power bridge to the various phases of the PM armature. However, since some adjustment of the reluctance switch is necessary, it was decided to leave enough adjustment so that the components would be assembled at random and the optimum adjustment determined later by test.

It was decided that adjustment of the reluctance switch stator would be more convenient than adjustment of the rotor. Therefore, provisions were made in the design so that both reluctance switches could be separately adjusted by approximately 45 mechanical degrees. It is necessary with this method to leave the determination of which reluctance switch is used for either rotation to the testing.

The stator of the PM motor is a conventional three-phase induction motor wound primary. It is held in place in the aluminum frame with a shrink fit to the frame. End bells are also made of aluminum with lightening holes. The end bells are piloted and held with safety wired screws to the frame.

The rotor of the PM motor is an 8 pole cast magnet with a keyway. The magnet has a slip fit with the shaft. A stainless steel ring with an extended tang fitting the permanent magnet keyway is pressed onto the knurled non-magnetic steel shaft. The tang extends into the keyway allowing a minimum of play. The cast magnet is machined to dimension, assembled to the rotor, and magnetized in place.

The reluctance switch rotor and stator punching laminations are bonded together with an epoxy resin. The reluctance switch stators have a slip fit to the reduced frame diameter. One stator fits against a shoulder on the frame. The second stator mounts against a spacer butting against the first stator. They are both held with two diametrically opposite screws. These screws mount into the frame shoulder and are locked with a stainless steel tab washer. Holes are drilled in the frame over the reluctance switch stators to allow the tester to rotate and lock the stators during the adjustment. Adjustment of the stator is allowed by long slots in the punchings.

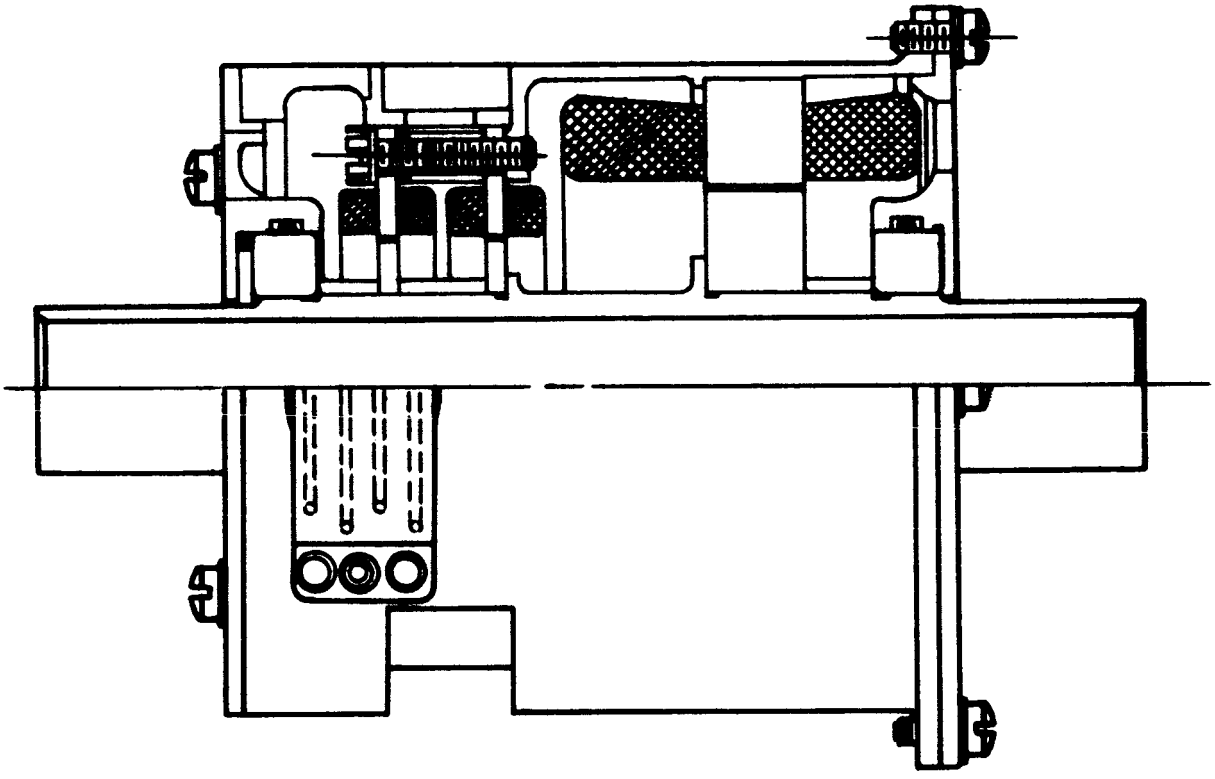

FIGURE 16. General Assembly of Rotating Package

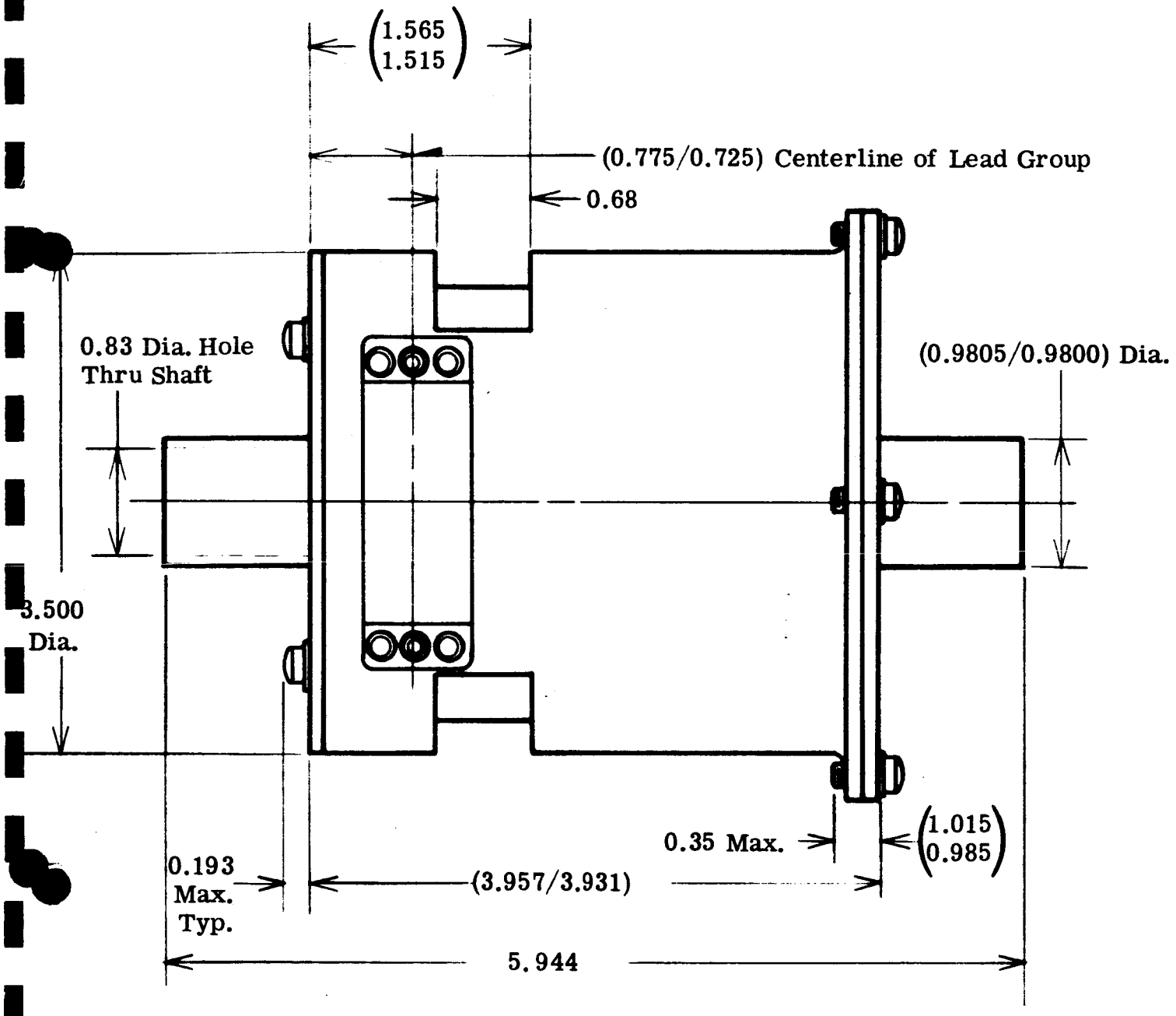

FIGURE 17. Outline of Rotating Package

The reluctance switch rotors are pressed on to a knurled shaft against a shoulder. The rotors are spaced by an aluminum spacer which is also pressed on the shaft. A second aluminum spacer is pressed onto the shaft outside and butting against the outside rotor to give a bearing shoulder. Shims are used in mounting the stators to insure alignment of rotors and stators.

All slot insulation is Pyre ML (glass impregnated with ML resin) and all wire enamel is ML. ML is a relatively new polyimide insulating resin developed by Dupont. The varnish is a chemically related aromatic polyether developed by Westinghouse called Doryl. All 33 teflon insulated leads are brought out through a Viton A grommet and through a teflon sleeve to the connector. The solder connections to the connector are covered with shrinkable irradiated polyethylene tubing. All hardware is stainless steel.

The bearings will consist of modified MRC (Marlin Rockwell) catalogue number 1905-S extremely light series bearings. The modification will consist of the removal of one shoulder of the outer race and the substitution of a new cage. The new cage will be composed of a silver-mercury or gallium and teflon amalgram formed at high temperature and pressure.

Some short lab tests will be run to establish the best combination.

Since one shoulder is cut away, the bearings can sustain thrust in only one direction. The bearings are mounted so that they take thrust in opposite directions. Axial freedom of movement is obtained by placing a compressed O-ring in a groove in the aluminum housing between the housing and the bearing OD. Allowance for expansion, tolerance build-up, and some preload is made by installing an O-ring to be compressed between one bearing and the end bell in an axial direction. This arrangement avoids the possibility of cold welding of the bearing to the housing in the vacuum. The O-rings are made of Viton A synthetic rubber.

Balancing of the rotor is a requirement of the specification. The rotor will be dynamically balanced to 0.01 ounce-inches squared by drilling holes in the shaft. These holes will be drilled in two areas to attain two balancing planes.

The aluminum was treated with a chemical film and all other components are inherently corrosion resistant, including the magnetic steels. Therefore, no provision was made for painting or otherwise protecting any surface.

Using the dimensions of the parts and the specific weights of the various materials, the following calculation of the weights of the various components of the rotating assembly was made.

	Component	Weight
(2)	Reluctance Switch	0.354
	PM Motor Stator	0.873
	PM Motor Field Magnet	0.342
	Total Active Electrical Weight	1.569 lbs.
	Shaft	0.338
(2)	Bearings	0.230
	End Bells	0.349
	Frame	0.408
	Connector	0.100
	Miscellaneous	0.100
	Total Mechanical Weight	1.517
	Total Calculated Weight =	3.1 lbs.

4. Solid State Commutator Design

a. General

The following requirements of NASA Specification Number 63-135 were considered in the design of the commutator circuit.

(1) The torque motor commutation circuit, which includes rotor-position sensing drive and armature switching circuits, must use a minimum number of components and conservative derating practice.

(2) The commutator design must permit torque motor shaft position and speed control to be achieved by:

(a) Variation of the armature D. C. voltage excitation. The commutator must then function properly for armature terminal voltages ranging from 0 VDC to 40 VDC.

or

(b) Armature-voltage pulse modulation (pulse width, pulse frequency, etc.) in a pulsed drive system. The commutator must then be compatible with such a system,

providing an armature switching method that can be suitably controlled.

(3) The torque motor commutator circuit must be designed for minimum losses not to exceed 0.5 watts.

The assumption was made in the original proposal that this requirement applied at the 30 RPM no-load speed condition. It was also estimated that the losses would approach 2.5 watts maximum. Present design requirements indicate that the commutator losses will approach this value.

(4) The commutator must be able to withstand continuous stall current at 60 VDC excitation (approximately 2.0 amperes) without damage or deterioration of performance.

(5) Semiconductor components are to be silicon wherever possible.

(6) The commutator must be capable of operating in a vacuum of 1×10^{-9} mm Hg for a 1 year period.

(7) The commutator must operate properly over a temperature range of -10°C to 70°C.

(8) The commutator must operate properly after 50g, 2 msec shock and 5 minutes of random vibration (20-2000 cps, 15g rms) in each of three mutually perpendicular directions.

(9) The size and weight considerations for the commutator package were not defined by the NASA Specification. However, the maximum outline dimensions and estimated weight which were established by the contractor is as follows:

Height	-	2.25 inches
Width	-	4.75 inches
Length	-	5.60 inches

Estimated Weight = 1.75 pounds maximum

The commutator circuit, exclusive of the reluctance switch which is considered part of the motor, consists of three subcircuits. These are:

(a) three-phase bridge inverter
(b) squaring circuit
(c) reluctance switch drive oscillator

The design considerations of each circuit will be discussed separately.

b. Three Phase Bridge Inverter

A bridge inverter as shown in Figure 18 will be used to switch the armature current in the torque motor. The inverter will utilize silicon power transistors as switching elements. Controlled rectifiers could be adapted to this circuit; however, they were not selected because of gating problems resulting from operation in a direct current circuit.

The power transistors selected for this application are the RCA type 2N3442. Several factors influenced the selection of this transistor. The maximum operating voltage applied to the input terminals of the bridge is 60 volts d-c. It can be seen from Figure 18 that when transistor Q4 is in a saturated state, the collector to emitter voltage of Q1 will be

$$V_{CE(Q1)} = V_{input} - V_{CE\ (SAT.\ Q4)}$$

Since the saturation voltage is very low as compared to the input voltage it can be assumed for design purposes that full input voltage will appear across Q1. Therefore, a transistor with a V_{CE} capability of at least 120 volts should be used. This allows a safety factor for transient voltages. The type 2N3442 has sustained V_{CE} rating of 140 volts maximum. Other factors influencing the selection of this transistor are d-c gain, saturation voltage and current carrying capability.

Upon analyzing the bridge inverter, it can be seen that every current path traverses two collector to emitter voltage drops. Therefore, the total instantaneous collector power dissipation is equal to two times the collector voltage drop multiplied by the total instantaneous power supply current to the inverter bridge. Similarly, the total average collector power dissipation is two times the collector drop multiplied by the average inverter current. The collector losses due to switching are considered negligible since the speed of the motor determines the switching frequency. For this application, the maximum motor speed is 100 RPM which represents a switching frequency of only 400 cycles per minute or approximately 7 cycles per second. Since the inverter must be able to operate at continuous duty during locked rotor conditions, it is therefore imperative that the collector voltage drop be maintained at a minimum in order to maintain high efficiency.

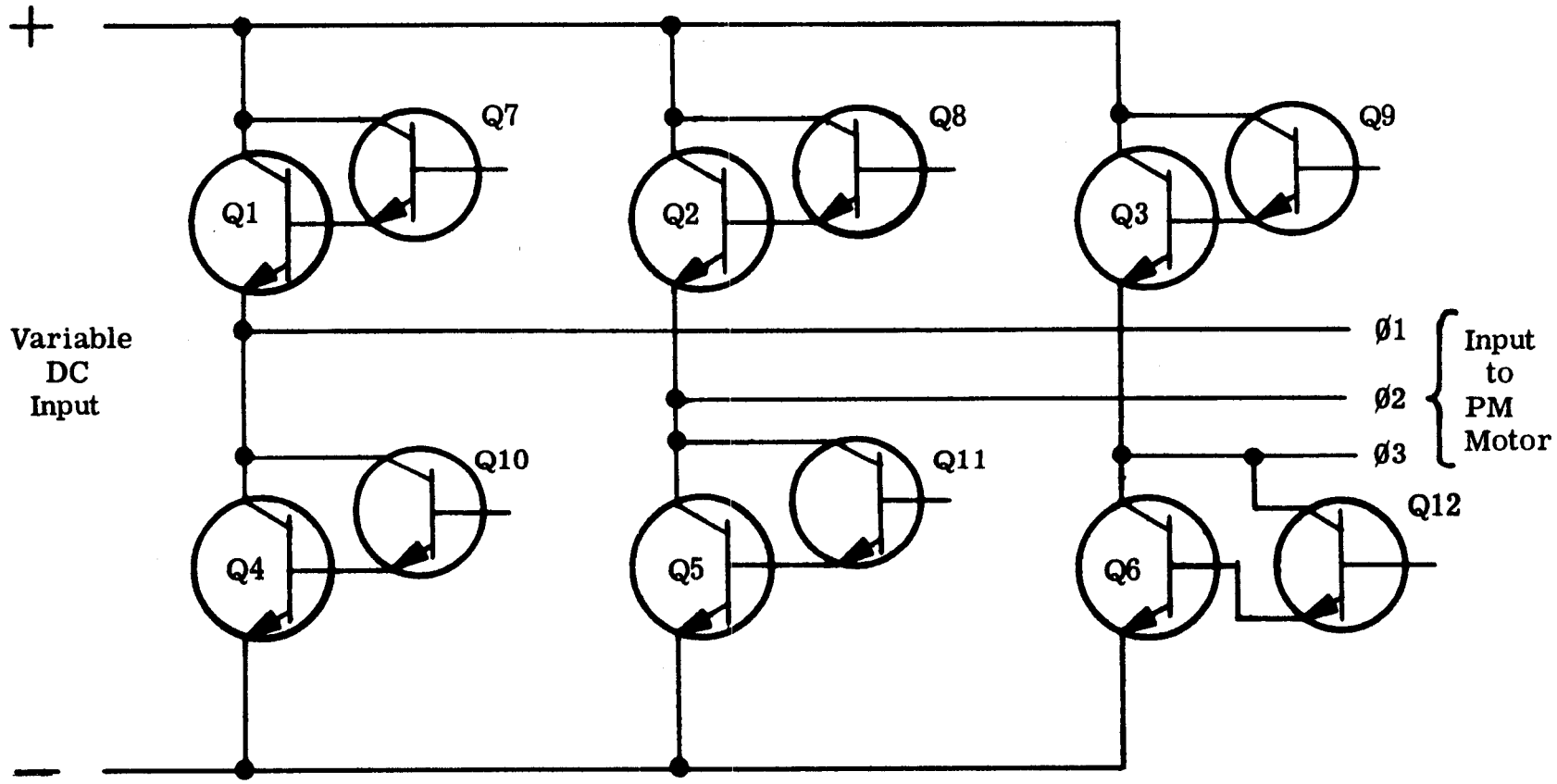

FIGURE 18. Three-Phase Inverter With Driving Transistors

The maximum collector current which will be sustained by any one of the bridge transistors will be 2.08 amperes required by the motor design. This magnitude of current will occur at locked rotor conditions with 60 volts d-c applied at the input terminals of the bridge in a -10°C ambient.

With a collector current of 2.08 amperes, the minimum gain of the type 2N3442 is 20. (This value was taken from published data and occurs at a case temperature equal to 125°C.)

Under these conditions a base drive current of at least 0.1 ampere will be required. The source of drive power for the inverter switches is the reluctance switch. In order to keep the power requirements of the reluctance switch as low as possible, a single stage of amplification will be used. The driver transistor will be a type 2N2102 connected to the power transistor in a direct-coupled (Darlington) configuration. It is recognized that when the direct-coupled amplifier configuration is used the collector-to-emitter voltage of the power transistor is dependent upon the collector-to-emitter saturation voltage of the driver plus the base-emitter drop of the power transistor. As a result, the collector-to-emitter voltage of the power transistor will be slightly higher than its saturation voltage because the power transistor will not be driven into complete saturation.

The addition of a series diode into the power transistor's collector circuit will cause saturation; however, it has not been included in this design since the power dissipation per power transistor will only approach 2 watts under the most extreme conditions. This dissipation is far below the capabilities of the power transistor selected.

c. Squaring Circuit

It was determined by testing a sample reluctance switch that the half-wave rectified and filtered base drive signals from the pick-up windings approach the wave shapes shown in Figure 19. This slowly varying output signal (in amplitude) provides the base drive for the inverter bridge power transistors. This type of signal is not compatible with the inherent high speed capability of semiconductor devices. As the base drive source varies from the "OFF" signal level to the "ON" signal level, the power dissipated in the switching transistor is somewhat as shown in Figure 20. The excessive power dissipation reduces the efficiency of the static commutator and is not tolerable in this application since the torque

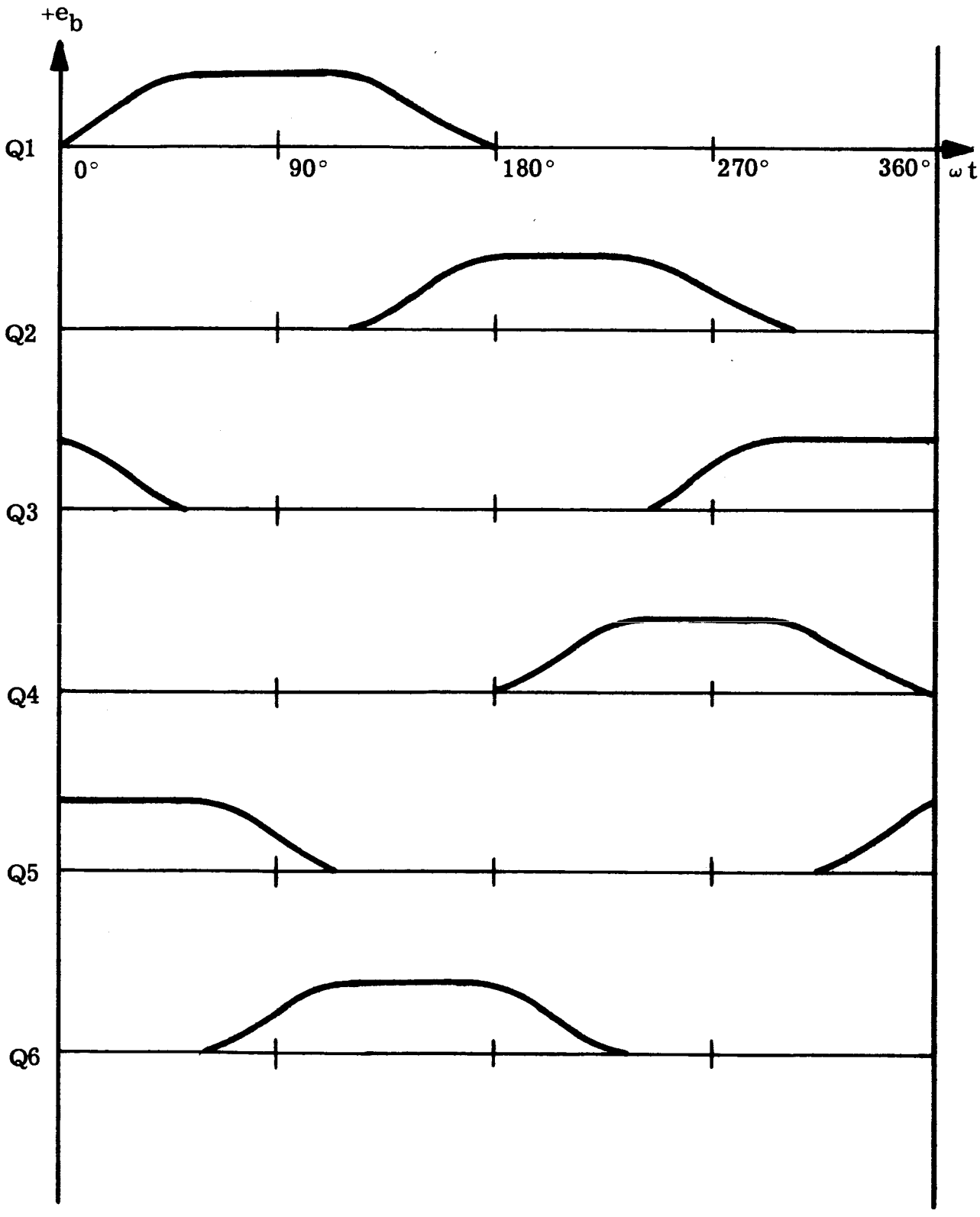

FIGURE 19. Base-Drive Waveforms

WAED64.55E-70

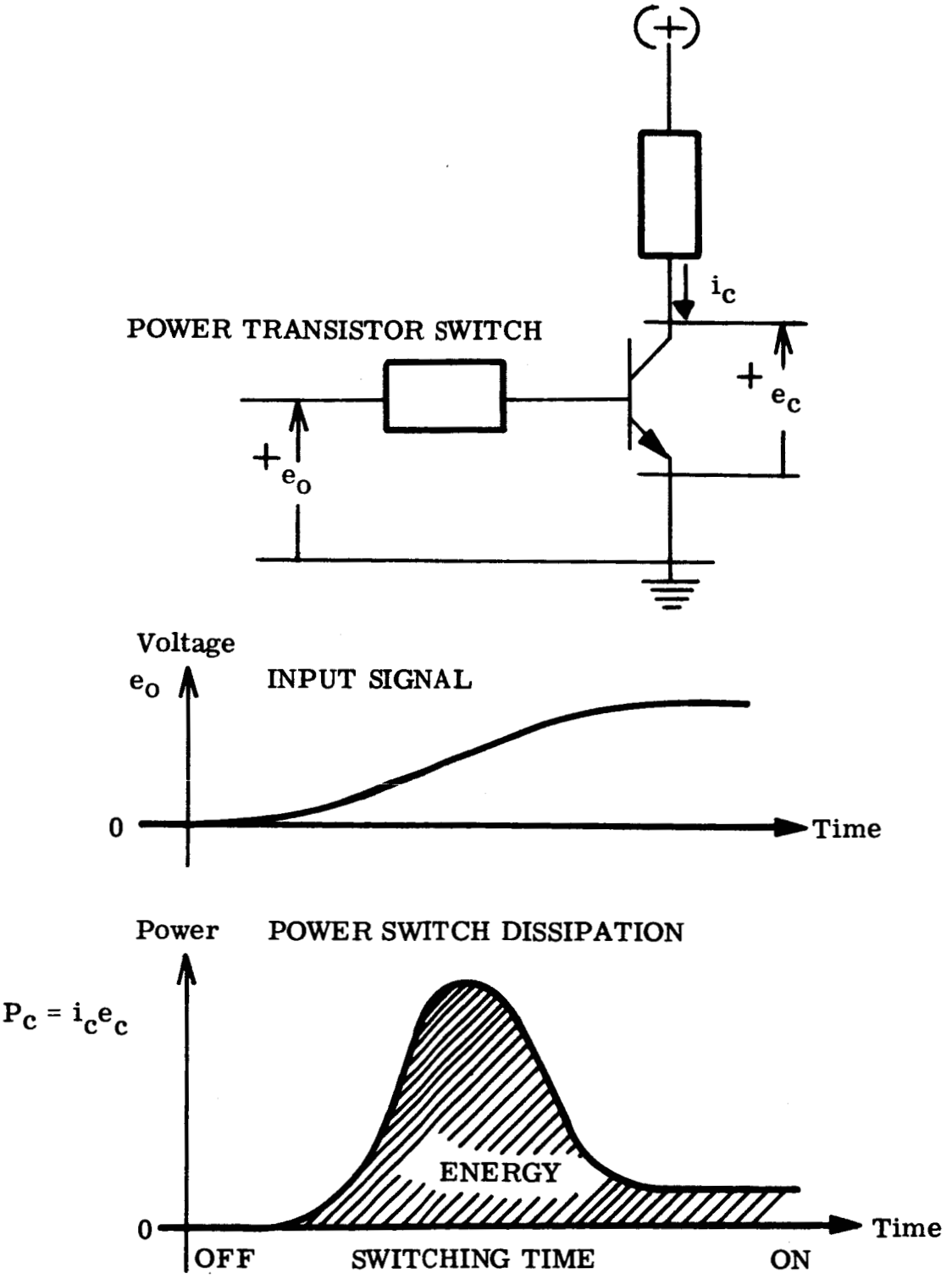

FIGURE 20. Switching Characteristics

motor must be operated in a locked rotor state. In order to take advantage of the high speed switching capabilities of semiconductors, it is necessary to convert the output signal from the reluctance switch to a digital "ON" or "OFF" voltage.

Various circuits employing the characteristics of semiconductors for converting an analog to a digital signal were considered for this application. One type of circuit which provides a square wave output independent of the shape of the input voltage is a Schmitt trigger. This type of circuit requires a d-c voltage supply which is independent of the source voltage. To adapt this type of circuit to the three-phase bridge inverter, isolated bias signals are required. This circuit was not further pursued because of its complexity. A tunnel diode driving a transistor provides the type of characteristic required to obtain a digital response; however, over the temperature range required for operation there is insufficient voltage supplied to assure turn on of the transistor. A silicon tunnel diode has a forward point voltage between 0.75 and 1.0 volts.

The squaring circuit which will be used utilizes a silicon controlled rectifier. The low level silicon controlled rectifier has many advantages over other semiconductor devices for this application. This device is especially adaptable for digital response conversion since it has but two forward biased states, namely, conducting (on) and blocking (off). It is characteristic of this device, as opposed to a transistor, that the change of state from "OFF" to "ON" occurs over an interval of time which is independent of the magnitude of the input signal. A gate controlled switch could be used in place of the controlled rectifier. This would be necessary if the device was required to be turned "OFF" during the conduction period. Since the controlled rectifier is being applied in such a way that turn-off is not required, there is no apparent advantage in using a gate controlled switch.

The circuit which will be used is shown in Figure 21. One of these circuits will be required to drive each switch in the inverter bridge. The input to the squaring circuit will be an amplitude modulated square wave which has a frequency of 5000 cycles per second and a peak voltage of 9 volts. A type 2N1595 silicon controlled rectifier (SCR_1) is used to determine the level of the source voltage. The controlled rectifier is gated from the voltage divider R_3 and R_4 and will be set to fire the controlled rectifier at approximately 6 volts. R_4 is a variable resistor and provides selectability of the response level. This in turn sets the width of the conduction angle for each power transistor, thus determining the waveform of the voltage applied to the motor stator windings. The controlled recti-

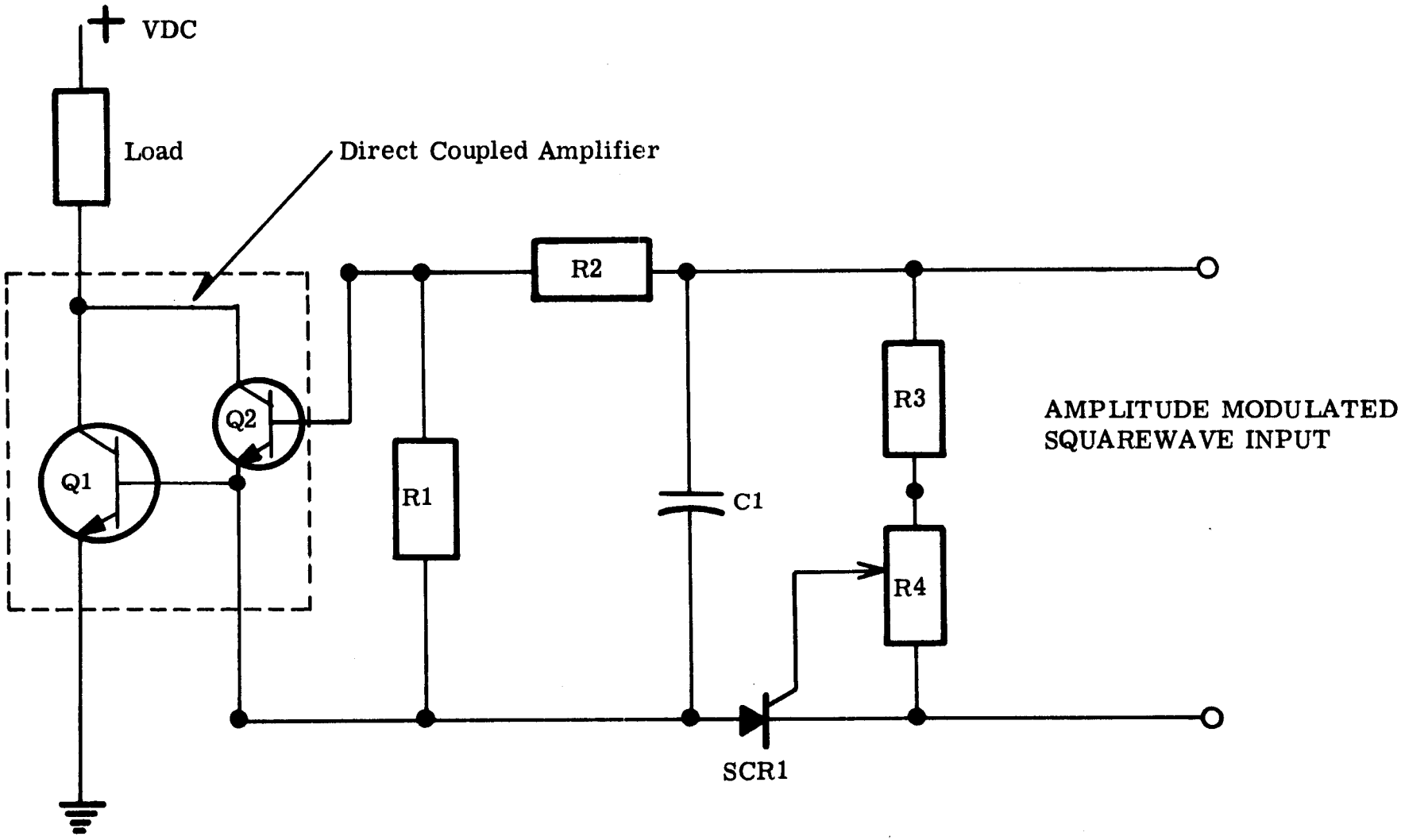

FIGURE 21. Squaring Circuit

fier switches "ON" and "OFF" at the frequency of the source; therefore, control is regained every negative half cycle. Resistor R_2 limits the base drive to transistor Q_2. This resistance is set at a level which assures saturation of Q_2 when the controlled rectifier fires. Resistor R_1 is a leakage bypass. It provides a path for leakage current to flow, and prevents partial turn on of Q2 just prior to the firing of the controlled rectifier. Capacitor C_2 filters the half-wave rectified signal. The capacitor is charged during the positive half cycle. During the negative half cycle, when SCR_1 is in a non-conducting state, the capacitor will discharge through R_2 and Q_2, keeping Q_2 in a saturated state. Figure 22 is representative of the action made possible by this circuit and has been verified by test.

d. Reluctance Switch Drive Oscillator

A square wave oscillator is used to provide the drive power for the reluctance switch. Two identical oscillators will be used in this application, one to provide power to one reluctance switch for clockwise rotation and the other to provide power to the second reluctance switch for counterclockwise rotation. Only one oscillator would be required if a multiple contact switch or relay for reversal is substituted. In line with the philosophy of using static components in the commutator circuit, two oscillators were selected.

Several arrangements of the square wave oscillator are possible - Royer, Jensen or resistive coupled. The resistive coupled oscillator as shown in Figure 23 will be used. This configuration assures self-starting without the addition of starting circuits; therefore, a minimum number of components are required. The design uses a saturable core transformer paralleled with the reluctance switch primary windings. Using this approach the saturable core transformer is not required to carry the load power, thereby reducing its power losses and size. Electrical isolation is provided by the reluctance switch.

In addition to the saturable core transformer, the basic oscillator consists of two similar transistors and two base drive resistors. The oscillator will be driven from a constant 28 volt d-c source. The peak collector current as determined from the requirements of the reluctance switch will be approximately 100 milliamperes. Based on these requirements, type 2N2102 transistors will be used.

The determining factors in establishing the maximum drive frequency are core loss in the reluctance switch and turn-on time of the controlled rectifier in the squaring circuit.

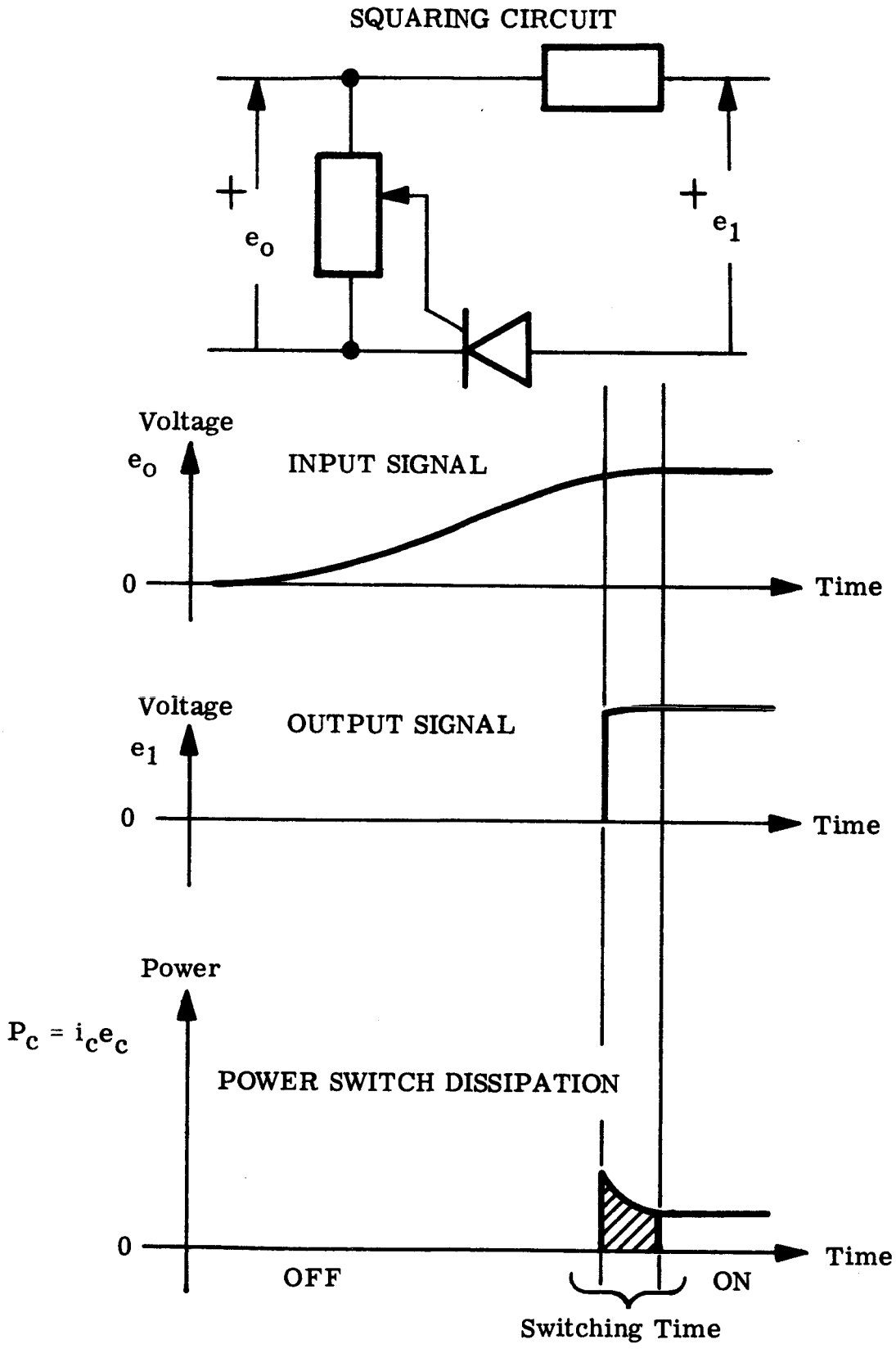

FIGURE 22. Digital Switching Characteristics

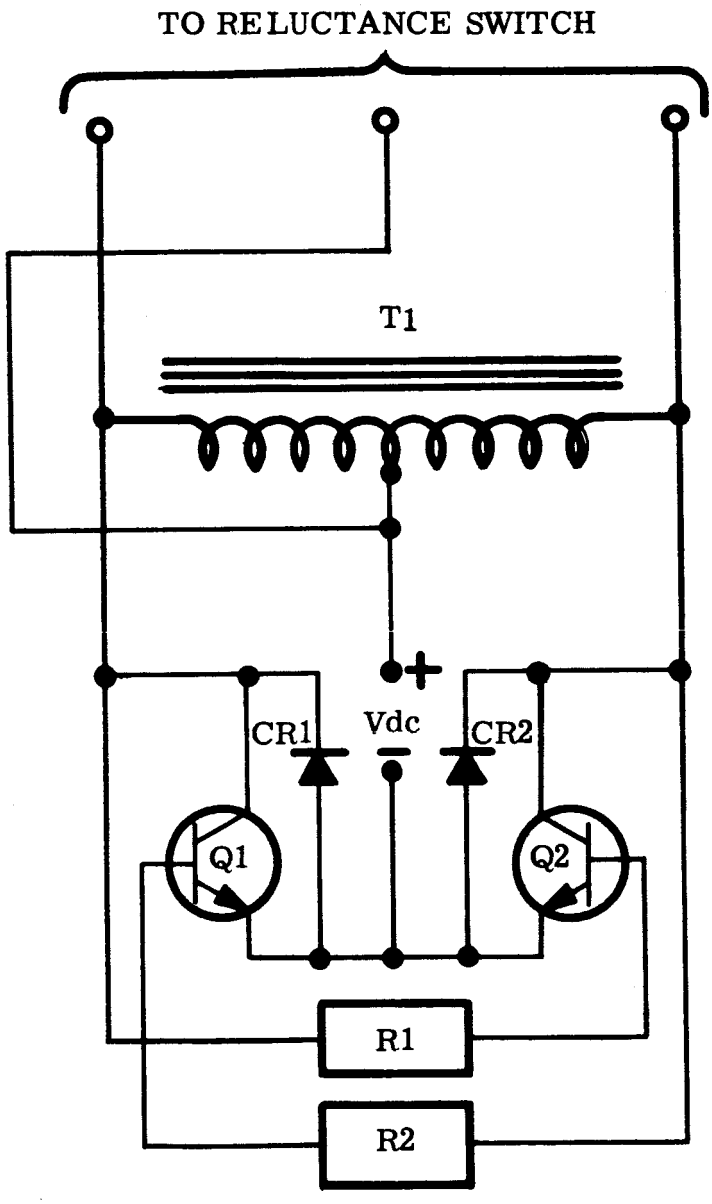

FIGURE 23. Resistive Coupled Oscillator

For example, the turn-on time of the controlled rectifier as used in the squaring circuit was measured to be 8×10^{-6} seconds. Setting the time for one-half cycle equal to 10 times the turn-on time of the controlled rectifier, the maximum frequency can be determined. Using the equation

$$T_o = \frac{1}{f}$$

the resulting frequency is:

$$(10)(8 \times 10^{-6}) = \frac{1}{2f}$$

$$16 \times 10^{-5} = \frac{1}{f}$$

$$f = 6250 \text{ cps}$$

The drive frequency was set at 5000 cycles per second which allows a margin of safety.

Standard design techniques were used in determining the requirements of the saturable core transformer. Square-loop core material such as "Orthonal" will be used. The transformer will be a toroidal type with two windings of 227 turns each. Double coated ML enamel wire Number 33, will be used. The size of the transformer will be approximately 0.44 x 0.75 inches.

5. Mechanical Design For the Control Package

The control is designed to operate in a vacuum of 1×10^{-9} mm of mercury. The thermal design is such that the unit will operate satisfactorily in this type of environment when cooled by radiation or conduction to a heat sink. During operation at sea level conditions, the unit is designed to cool by natural convection.

All components will be mounted on aluminum brackets. The completed assemblies will be coated with epoxy varnish to help retain the components and assure a constant heat path to the bracket. Heat generated by the components will be conducted through the bracket to the base and outside surface. The type of mounting surface is unknown; however, if the mounting surface will conduct the heat away and if it is at a low enough temperature, most of the generated heat will be carried away by conduction. If this is not the case, most of the heat will be conducted to the outer skin of the package from which it will be radiated.

To facilitate the heat transfer to the base or the outer skin, all joints where a vacuum gap may occur under vacuum conditions, are filled with epoxy material to assure a constant heat path.

The control, while operating at locked rotor and high input voltage, will generate approximately 6 watts of heat. The surface area of the package is approximately 50 square inches; therefore the surface must dissipate approximately 0.12 watts per square inch. Figure 24 shows an outline of the control package. The outline dimensions are in accordance with the dimensions originally established. A new estimate of the weight indicates that the package will be approximately 0.38 pounds lighter than the original estimate of 1.75 pounds. The exact weight cannot be established until a unit is built.

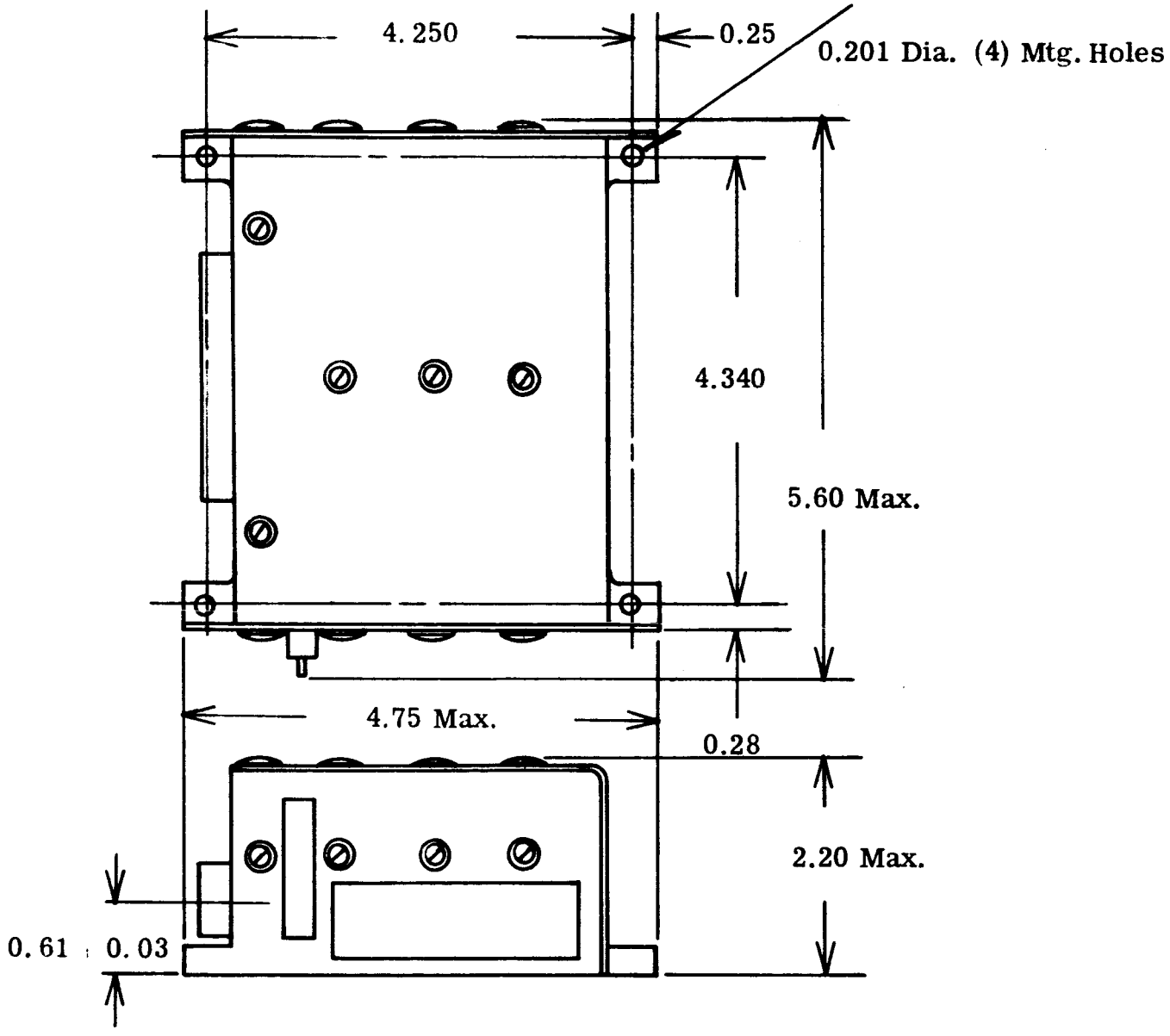

FIGURE 24. Outline of Control Package

III. NEW TECHNOLOGY

To comply with the "New Technology" reporting requirements as defined by paragraph 3.2.3 of TID-S-100, exhibits A, B, C, D and E are included. These exhibits are identified to the following.

Exhibit A - Disclosure No. 63,411, Disclosure Book No. 7737, Page 17.

Exhibit B - Disclosure No. 64,622, Disclosure Book No. 7738, Page 16.

Exhibit C - Disclosure No. 64,621, Disclosure Book No. 7738, Page 17.

Exhibit D - Disclosure No. 64,500, Disclosure Book No. 7738, Page 18.

Exhibit E - Disclosure No. 64,620, Disclosure Book No. 7738, Page 20.

The disclosures are being processed by the Westinghouse Patent Department in accordance with Westinghouse policies and procedures.

EXHIBIT A

Title:

A multiple pole rotor position sensing device for controlling a three-phase transistor bridge commutator.

Description:

This position sensing method uses a constant number of sensors, dependent upon the number of phases of the circuit being driven. The number of switching steps is changed by varying the number of separate entities into which the driving function is divided or the number of separate paths for the driving function on a rotor. (i. e. poles, light sources, etc.)

Uses:

Senses rotor position and provides drive signals to switch armature currents in brushless d-c motors and is being utilized in performance of this contract.

EXHIBIT B

Title:

Angular position and torque applicator.

Description:

This item refers to Exhibit A --
The invention is the use of that rotor position sensing device in conjunction with its driven motor circuit to provide mechanically isolated synchronous drive for the motor and torque amplification.

Uses:

Position control of radar or other directional antennae.

EXHIBIT C

Title:

Angular position controller/indicator.

Description:

Obtaining synchronous operation of two or more brushless d-c motors by interconnection of their rotor position sensing devices.

Uses:

Position control or indication of radar or other directional antennae.

EXHIBIT D

Title:

Digital response level detector.

Description:

The use of a controlled rectifier gated from a voltage divider to obtain a quickly varying (digital) response from a slowly varying (analog) driving function.

Uses:

a. Circuit protection

b. Signal shaping circuit

c. Amplitude detecting circuit

EXHIBIT E

Title:

Angular speed and displacement amplifier

Description:

This item refers to Exhibits A and B --
The use of the rotor positioning sensing device with the number of rotor poles or positions changed to a value which would give more or less than one complete switching sequence per revolution will give angular speed or displacement multiplication when mechanically isolated.

Uses:

Servo mechanism systems requiring speed reduction or multiplications.

IV. PROGRAM FOR THE NEXT REPORTING INTERVAL

The program for the last quarter of 1964 will consist mainly of procurement of parts and materials and manufacturing. The brief solid lubricant bearing development program being performed by the Westinghouse Research Laboratories will be complete and bearings will be available in November. This development program consists of determining the best mercury or gallium amalgam composition from a mechanical strength standpoint to be used for bearing retainers and also checking the outgassing characteristics. Some standard bearings will be modified by the Westinghouse Research Laboratories to incorporate the new solid lubricant retainers.

The specific test program will be planned in detail and a test letter written to the laboratory. An engineering unit will be used to determine the best method of adjustment of the reluctance switch stators. After the adjustment and stabilization of the engineering unit, the adjustment procedure will be written down and performed on the rest of the units. However, this actual testing will be performed in the first quarter of 1965 since units will not be available until then. The test program to be planned will include a tentative adjustment procedure plus the tests to be taken after adjustment. Tentative plans are to perform torque and ripple tests at locked rotor and running tests at no load at several voltages. Wave forms at various points in the circuit will be viewed and recorded.

V. CONCLUSIONS AND RECOMMENDATIONS

1. The permanent magnet motor, as designed, is close to the lightest and smallest that could be built, within the design limitations.

2. The ripple torque has been minimized as much as possible with the use of a full-pitch winding, a two-thirds pole enclosure, and skew. There is an inherent ripple in the design due to using alternately 2 and 3 legs of the winding. The ripple should be close to the 10 percent limit of the specification.

3. The reluctance switch was designed with a substantial electrical safety margin. Subsequent tests may indicate that the reluctance switch could be weakened, thus lowering core loss slightly.

4. A frequency of 5000 cps was selected as the oscillator frequency. This approaches the limiting switching speed on some of the electronic components. This frequency also approaches a practical limit from a core-loss standpoint for the size of the present reluctance switch using the best available magnetic steel.

5. The weight of the packaged motor and reluctance switch will be approximately 3. 1 pounds. The weight of the control box will be approximately 1. 37 pounds.

6. Because the weight required by the specification was exceeded, the minimum torque and maximum current performance characteristics called out in the specification were taken as nominal calculated values.

7. The no-load speed was not calculated, being a function mainly of bearing friction which is not accurately known.

8. The motor and commutator as designed are adaptable to excitation level or pulse width modulation speed control systems. In its present state these voltage control systems would have to be applied at the main power terminals. The control voltage must remain reasonably constant. Position control could be achieved by disconnecting the reluctance switch and controlling the power switches with logic circuits fed by digital signals. One method of transforming an analogue signal to a digital signal is illustrated by the squaring circuit used in the design. This method of controlling position would require some modification of the commutator circuit to provide access to the power bridge.

Another method of achieving position control is described in the New Technology Section. This method would require placing the reluctance switch on a separate shaft. The position of the reluctance switch shaft could then be used to control the position of the motor shaft. This would essentially be a low speed position control because of the synchronous nature of the control.

9. The preliminary estimate of losses in the commutator circuit of 2.5 watts appears to be approximately correct. It is assumed that this occurs at the 3-volt, no-load running condition.

VI. BIBLIOGRAPHY

1. Roters, Herbert C., Electromagnetic Devices, John Wiley and Sons, Inc., 1941

2. Veinott, Cyril G., Theory and Design of Small Induction Motors, McGraw-Hill Book Co., Inc., 1959

3. Manual 7. Design and Application of Permanent Magnets, Published by Indiana General Corporation, Magnet Division, Valparaiso, Indiana

VII. NOMENCLATURE

Symbols and Abbreviations

NOTE: All length and area dimensions are in inches and square inches.

A - Area of flux path.

A_1 - Specific Area - See Figure 8.

A_2 - Specific Area - See Figure 8.

ACT - Coil throw in slots.

AG - Air gap.

ASW - Average slot width.

ATW - Tooth width.

AT/in - Ampere turns per inch.

a - Magnet dimension - See Figure 7.

a_1 - Slot dimension - See Figure 12.

a_2 - Slot dimension - See Figure 12.

a_3 - Symbol used for literal substitution for complex function.

a_4 - Symbol used for literal substitution for complex function.

a_5 - Symbol used for literal substitution for complex function.

B - Flux density (general).

B_{AG} - Flux density in the air gap in lines per square inch.

B_m - Flux density in the magnet in lines per square inch.

B_T - Flux density in the teeth in lines per square inch.

b_s - Tooth length.

VII. NOMENCLATURE
(Continued)

C - Designation for a capacitor.

C_f - Multiplier - See Appendix.

C_p - Coil perimeter.

CR - Designation for silicon diode.

c - Dimension of magnet - See Figure 25.

c_s - Slot dimension - See Figure 12.

D - Diameter at the center of the air gap.

D^2 - Maximum insulated diameter of wire squared.

D_a - Average diameter of winding.

DBS - Depth below slot.

D_b - Bare wire diameter.

d - Dimension of magnet - See Figure 25.

d_s - Slot dimension - See Figure 12.

e - Dimension of magnet - See Figure 25. Also pole enclosure in per unit.

e_o - Instantaneous input voltage.

e_1 - Instantaneous output voltage from squaring circuit.

e_b - Instantaneous base to emitter voltage.

e_c - Instantaneous collector to emitter voltage.

e_s - Slot opening.

$F_1(s)$ - Laplace transform.

VII. NOMENCLATURE
(Continued)

$F_2(s)$ - Laplace transform.

$F_3(s)$ - Laplace transform.

f - Frequency.

GSWA - Slot area excluding slot insulation.

H - Ampere turns per pole at any point.

H_1 - Total ampere turns per pole supplied by the magnet.

I, I_1, I_2, I_3, I_5 - Steady state current in amperes - Refer to text for specific application.

I_a - Total effective armature current in amperes.

ID - Dimension of magnet - See Figures 25 and 7.

I_{lp} - Analogous flux current - See Figure 15.

I_m - Analogous flux current - See Figure 15.

I_{sl} - Analogous flux current - See Figure 15.

I_T - Analogous flux current - See Figure 15. Also insulation thickness.

i_1, i_2, i_3 - Instantaneous currents - See Figure 13.

i_c - Instantaneous collector current.

VII. NOMENCLATURE
(Continued)

j - Symbol for $\sqrt{-1}$.

K - Constant in torque formula.

K_s - Slot leakage constant.

L - Effective air gap length.

L_f - Leakage factor - Multiplier on the air-gap flux to obtain the magnet flux.

L_m - Mutual inductance.

L_p - Primary inductance.

L_s - Secondary inductance.

l - Magnet dimension - See Figure 7. Also length of flux path.

l_1 - Magnet dimension - See Figure 7.

M - Designation for motor.

mmf - Magneto motive force.

N_2 - Turns per secondary tooth.

N_p - Turns in primary.

OD - Outside diameter.

P, P_1, P_2, P_3, P_4, P_5, P_6 - Permeances - See text for specific application.

P_b - Permeance - See Figure 15.

P_f - Empirical constant in coil perimeter equation.

P_l - Total leakage permeance.

P_{ep} - Total primary leakage permeance for the reluctance switch for half the magnetic circuit.

PM - Permanent magnet.

P_m - Mutual permeance (series equivalent).

P_p - Primary leakage permeance (series equivalent).

P_{pm} - Mutual permeance.

P_s - Secondary leakage permeance (series equivalent).

P_{sl} - Total slot leakage permeance.

p - Number of poles.

p_c - Instantaneous power dissipation.

pp - Number of parallel paths.

Q - Designation for transistor.

R - Dimension of magnet - See Figure 25. Also designation for resistor.

Rhot - Total hot motor resistance.

R_L - Load resistance referred to the primary.

R_m - Core loss resistance.

R_p - Primary resistance.

Rph - Phase resistance.

Rphot - Hot primary resistance.

VII. NOMENCLATURE
(Continued)

R_s - Secondary resistance referred to the primary.

Rshot - Hot secondary resistance.

r, r_1, r_2, r_3, r_4 - Dimensions of magnet - See Figure 25.

SCR - Designation for silicon controlled rectifier.

S_f - Saturation factor - Multiplier on air-gap length to account for the mmf required by the steel.

S_p - Number of armature slots.

s - Slots per pole - Also Laplace complex variable.

T - Turns ratio - primary to secondary. Also designation for transformer.

T_o - Period of oscillator output wave.

T_p - Tooth pitch.

TPC - Turns per coil.

t - Time.

V, V_2, V_4 - Voltages - See Figure 13 and text for particular designation.

V_b - Voltage - See Figure 15.

VII. NOMENCLATURE
(Continued)

V_{CE} - Collector to emitter voltage.

$V_{CE(SAT)}$ - Saturation collector to emitter voltage.

w - Stack length.

X_m - Mutual reactance.

X_p - Primary reactance.

X_s - Secondary reactance referred to the primary.

Z - Total effective armature series conductors.

Z_1, Z_2, Z_3, Z_4, Z_5 - Impedances - See Figure 13.

Zph - Total series conductors per phase.

Δ - Single air gap length.

θ - Angular dimension of magnet - See Figure 25.

μ - Absolute permeability of air = 3.19.

ϕ - Flux in lines per pole. Also, designation for a particular phase.

ϕ_1 - Leakage flux.

Ω - Resistance of one inch of wire.

VIII. APPENDIX

Derivation of Leakage Permeance Formula
Refer to Figure 9 and Figure 25
Derivation of Permeance Formula For P_3

$$\theta = \frac{2\pi}{p} \quad , \quad p = \text{Number of Poles}$$

$$H \text{ at } r = \frac{H_1(r-r_1)}{r_2-r_1}$$

where:

H = mmf per pole at any point.

H_1 = total mmf per pole supplied by magnet.

The derivation is based on the mmf being zero at r_1 and rising to H_1 at r_2. This is a close assumption since the gap at r_1 is actually close to zero.

$$\text{Permeance} = \frac{\mu A}{l} \quad \text{generally}$$

where:

μ = permeance of material which in the case of air = 3.19

A = area of path

l = length of path

Therefore at r

$$dP = \frac{\mu \, wdr}{r \frac{\theta}{2}}$$

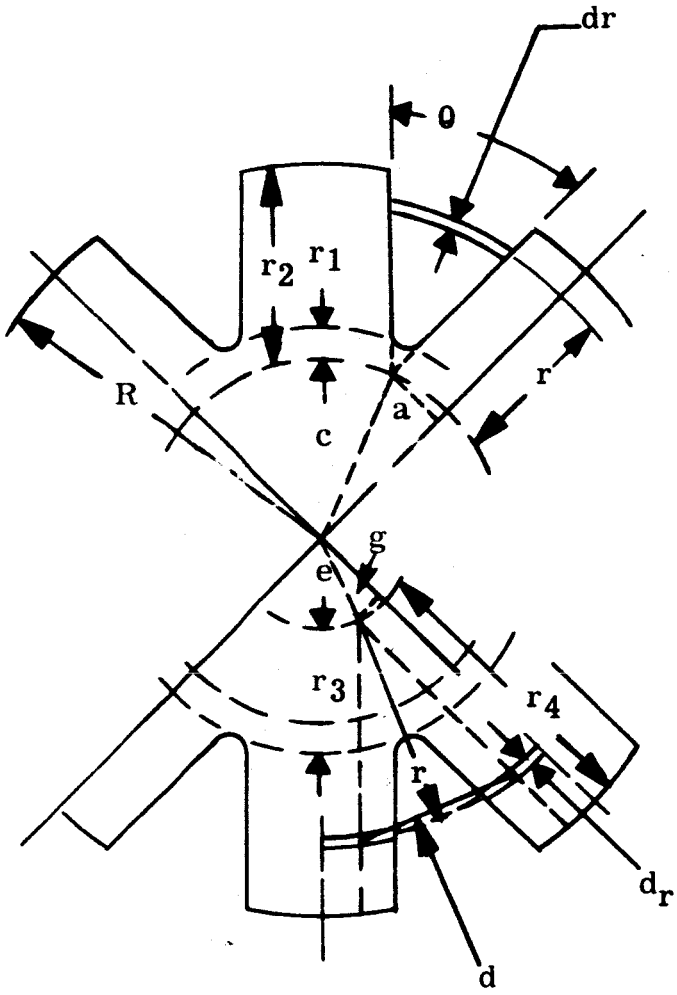

FIGURE 25. Symbols For Permeance Derivations

where:

w = length of stack

$r\frac{\theta}{2}$ = length of 1/2 of the arc (The permeance to be derived is half way across the gap because the mmf for the rest of the path is assumed to be supplied by the other pole.

$$\phi_1 = H_1 P_3$$

where:

ϕ_1 = the total leakage flux in permeance path P_3

P_3 = total leakage permeance P_3

$$d\phi_1 = \frac{2H_1(r-r_1)}{r_2-r_1} \quad \frac{\mu w dr}{r\frac{\theta}{2}}$$

The 2 multiplier comes from there being two sides to the magnet.

$$\phi_1 = \frac{2H_1 \mu w}{(r_2-r_1)\frac{\theta}{2}} \int_{r_1}^{r_2} \left(dr - \frac{r_1 dr}{r}\right)$$

$$= \frac{2H_1 \mu w}{(r_2-r_1)\frac{\theta}{2}} \left[r_2 - r_1 + r_1 \ln\frac{r_1}{r_2}\right]$$

$$P_3 = \frac{\phi_1}{H_1}$$

$$P_3 = \frac{2 \mu w}{(r_2-r_1)\frac{\theta}{2}} \left[r_2 - r_1 + r_1 \ln\frac{r_1}{r_2}\right] C_f$$

a = 1/2 magnet chordal pole width

$$c = \frac{a}{\sin\frac{\theta}{2}}$$

$$r_2 = R - c$$

$$r_1 = \frac{ID}{2} + a - c$$

Because the average mmf does not occur at the middle of the pole length, it is necessary to multiply by a correction factor C_f. The same will be true of P_2 and P_1. The following value of C_f will tend to give high leakage.

$$C_f = \frac{r_4 - r_3 + a + 2l_1}{\text{Length of Magnet}}$$

Derivation of Permeance Formula for P_2

Use Roter's formula for a half cylinder (See Reference 1). The taper does not matter in this derivation.

Roter's formula for half cylinder is in the notation of this report.

$$P = 0.26 \ \mu \ (r_2 - r_1) C_f$$

The actual paths of interest since an mmf-per-pole basis is used are 4 quarter cylinders having a total of 1/2 the length and 4 times the area giving a multiplier of 8 on the above formula. However, only the average mmf is effective which is 1/2 the total approximately. Therefore, the total multiplier is 4 or

$$P_2 = 1.04 \ \mu \ (r_2 - r_1)$$

Derivation of Permeance Formula for P_1

$$d = 2r \sin\frac{\theta}{2} \quad \text{(chordal length)}$$

Average length of path d forms the base of the semicircle which describes the average path.

$$= \frac{\pi d}{4} = \frac{\pi r}{2} \sin\frac{\theta}{2} \quad \text{for half length}$$

Area of path = 4a dr (4 sides to one pole)

$$dP = \frac{8\mu\, adr}{\pi r \sin\frac{\theta}{2}}$$

$$d\phi_1 = HdP$$

$$H = \frac{(r-r_3)H_1}{r_4-r_3}$$

$$d\phi_1 = \frac{8(r-r_3)H_1\mu\, adr}{(r_4-r_3)\pi r \sin\frac{\theta}{2}}$$

$$\phi_1 = \frac{8\mu a H_1}{\pi(r_4-r_3)\sin\frac{\theta}{2}} \int_{r_3}^{r_4}\left(dr - \frac{r_3 dr}{r}\right)$$

$$P_1 = \frac{8\mu a}{\pi(r_4-r_3)\sin\frac{\theta}{2}}\left[r_4 - r_3 + r_3 \ln\frac{r_3}{r_4}\right] C_f$$

$$e = \frac{a}{2\sin\frac{\theta}{2}}$$

$$r_4 = R - \frac{a}{2\sin\frac{\theta}{2}}$$

$$r_3 = \frac{ID}{2} + a - \frac{a}{2\sin\frac{\theta}{2}}$$

Derivation of Permeance Formula for P_4

$$A_1 = \left[\left(\frac{ID}{2} + a\right)^2 - \left(\frac{ID}{2}\right)^2\right] \frac{2\pi}{p} = \text{Area of 4 sections per pole}$$

$$\text{Average length base} = \frac{(ID+a)\pi}{2p}$$

$$\text{Average length} = \frac{(ID+a)(\pi)^2}{8p} \text{ for half length}$$

$$P_4 = \frac{16\mu \left[\left(\frac{ID}{2}+a\right)^2 - \frac{ID}{2}^2\right]}{\pi\,(ID+a)}$$

$$= \frac{16\mu\ [ID+a]\ a}{\pi\ (ID+a)} = \frac{16\mu\ a}{\pi}$$

$$\text{Effective } P_4 = P_4\left(\frac{\text{Average mmf}}{\text{Total mmf}}\right) = P_4\left(\frac{\text{1/2 average length base}}{\text{Magnet Length}}\right)$$

$$= \frac{16\mu\ a}{\pi}\ \frac{(ID+a)\pi}{4p\ \text{Magnet Length}}$$

$$= \frac{4\mu\ a(ID+a)}{p\ (\text{Magnet Length})}$$

Derivation of Permeance Formula for P_5

Assume that path is a complete half annulus with a center cylinder of zero diameter.

$$A_2 = \frac{(ID)\ \pi\cdot w}{p} = \text{Area of 2 paths}$$

$$\text{Average Length Base} = \frac{(ID)\pi}{2p}$$

$$\text{Average Length} = \frac{(ID)\ \pi^2}{8p} \text{ for half length}$$

$$P_5 = \frac{\mu\,(ID)\ \pi W\ \ 8P}{P(ID)\ \pi^2}$$

$$= \frac{8\mu\ w}{\pi}$$

$$\text{Effective } P_5 = P_5 \left(\frac{\text{Average mmf}}{\text{Total mmf}}\right)$$

$$= \frac{8\mu w}{\pi} \frac{(ID)\pi}{4p(\text{Magnet Length})}$$

$$= \frac{2\mu w ID}{p(\text{Magnet Length})}$$

Derivation of Permeance Formula for P_6

P_6 is a spherical quadrant shell with the center sphere having zero diameter.

Average thickness of shell

$$= \frac{(ID)\pi}{2p}$$

$$P = \frac{\mu (ID)\pi}{8p} \quad \text{From Rotors}$$

But area is 4 times (4 paths from one pole) and length is half (per pole basis). Therefore there is a multiplier of 8.

$$P_6 = \frac{\mu (ID)\pi}{p}$$

$$\text{Effective } P_6 = P_6 \left(\frac{\text{Average mmf}}{\text{Total mmf}}\right)$$

$$= \frac{\mu (ID)\pi}{p} \frac{(ID)\pi}{4p(\text{Magnet Length})}$$

$$= \frac{\mu (ID)^2 \pi^2}{4p^2(\text{Magnet Length})}$$