FACILITY FORM 602

N65 13449
(ACCESSION NUMBER)

(THRU)

47
(PAGES)

1
(CODE)

TMX-55115
(NASA CR OR TMX OR AD NUMBER)

07
(CATEGORY)

X-531-64-71
TMX-55115

A HYBRID RANGING SYSTEM FOR SPACECRAFT

GPO PRICE $ _____

OTS PRICE(S) $ _____

Hard copy (HC) 2.00

Microfiche (MF) .50

APRIL 1964

GODDARD SPACE FLIGHT CENTER
GREENBELT, MD.

FGT-23657

A HYBRID RANGING SYSTEM FOR SPACECRAFT

By:

R. T. Fitzgerald, P. Engels, W. Shaffer
E. Habib, and M. Mitchko

ABSTRACT

13419 over

This report describes, in engineering terms, the principles and practice of satellite ranging by direct measurement of the elapsed time for a hybrid combination of sidetone-modulated and pseudo random noise-modulated, CW, RF energy to travel from the ground, to a spacecraft and back, after being transponded in a phase coherent manner at the spacecraft. A ranging subsystem utilizing sidetone-PN techniques was successfully built at the Goddard Space Flight Center and is now ready for final loop tests and integration into the GSFC Range and Range Rate System, to give the latter universal cisplanet ranging capabilities.

The Hybrid Ranging System functions as follows: a demand pulse synchronized to WWV stores a binary pattern composed of transmitted bits and starts a time interval counter which is readied for stoppage when the identical signal is received. Simultaneously, sidetones, harmonically related to one another, are transmitted in alternately reversed

45
250
15
90

13449

phases, received in reversed phases and are used for vernier stop-control of the time interval counter. Thus, the non-ambiguous advantages of PN encoding are exploited without the cost of the wide bandwidth required for precise PN-only range measurements; and the precision and narrow bandwidth advantages of sidetone ranging are exploited without the cost of the engineering problems associated with ambiguity resolution by fractional cycle per second sidetones.

Author

CONTENTS

Abstract i

1. Introduction 1

2. Basic TIMER System 3

3. Some Properties of Maximal Linear Codes. 6

4. Some Properties of Acquirable Codes 12

5. Overall Description 14

5.1 Correlation Circuit 18

6. Hybrid System 19

6.1 Cisplanet Ranging. 22

6.2 Conclusion 24

Appendix I. 25

Bibliography. 34

A HYBRID RANGING SYSTEM FOR SPACECRAFT

1. Introduction

A spacecraft ranging system which utilizes both sidetone and encoded signals has been built in the Goddard Space Flight Center laboratories and has worked as a subsystem—it is now ready for final loop tests. This universal hybrid system capitalizes upon both the advantages of sidetone ranging which permits fine distance definition under restricted bandwidth conditions, and upon the advantages of pseudo random encoding which permits unambiguous ranging without the need for many low frequency sidetones and their associated problems. The new system eliminates the basic disadvantages of previous ranging systems: the unnecessarily wide bandwidths and complex coding techniques of the encoded-signal-only system; and the fractional cycle per second problems of the sidetone-only system at cisplanetary distances.

The hybrid system will be exploited to enhance the highly successful GSFC sidetone ranging system which has functioned with precision on Syncom in a special tracking network and which has made accurate range measurements on IMP in the general tracking network. With this modification, the GSFC Range and Range Rate System will have a universal ranging capability applicable to cislunar tracking problems such

as Apollo and cisplanet tracking problems such as non-ambiguous, apogee-ranging on projected IMP missions.

The purpose of this report is to present an overall, but brief description of the Hybrid ranging system. The Hybrid modification is compatible with the highly successful Goddard Space Flight Center's Range and Range Rate System, and augments its capabilities. In this modification of the sidetone system, known encoded ranging techniques are combined with direct RF transit time measurement and sidetone techniques to create a more optimum design than previously known designs.* To distinguish the new system it is called the Hybrid System; it utilizes a "TIMER" coding technique (from: Time Interval Measurements with an Encoded Ranging System); it relies primarily upon direct measurement of the time required for both sidetones and an encoded, CW, RF signal to travel from the ground to the spacecraft and back, after being transponded in a phase coherent manner at the spacecraft. In this report the TIMER techniques are emphasized because they are new; but the significant advantages and the successful field performances of the precise sidetone ranging system are the base upon which the Hybrid ranging system is built.

This report is divided into five sections as follows:
Basic TIMER System, Some Properties of Maximal Linear Codes, Some

*A number of the coding techniques described in this report were created by members of the Jet Propulsion Research Laboratory and were derived here from information contained in JPL Research Summary Reports 36-1, 36-2, 36-3 . . . etc. issued quarterly starting in 1960. Additional coding concepts were derived from other reports listed in the Bibliography.

Properties of Acquirable Codes, Overall Description, and Hybrid System. An Appendix describes the practical digital circuitry used to demonstrate the feasibility of the Hybrid version of the TIMER System. More expanded and detailed descriptions of individual circuits, codes, and, specifically, the Goddard Space Flight Center's Range and Range Rate System are contained in the reports listed in the Bibliography.

2. Basic TIMER System

Basically, the TIMER System determines the time delay between the transmission and reception of an unambiguous PN-encoded pattern. This technique which is closely related to simple pulse radar methods, requires no complex computer operations. The principles of range measurements made with this system are illustrated in the simplified block diagram shown in Figure 1.

A simple maximal linear code, 1 1 1 0 0 1 0, is used as an example only. If this code is continuously transmitted as 1 1 1 0 0 1 0 1 1 1 0 0 1 0 1 1 1 . . . etc., it can be broken up into seven unambiguous, sequential three-bit groups of 1 1 1, 1 1 0, 1 0 0, 0 0 1, 0 1 0, 1 0 1, and 0 1 1. Each sequential group of three bits is unambiguous and definitive in the sense that within the total code each three-bit word or pattern occurs only once; each word is unique. Thus, if a transmitted pattern composed of three bits is stored and compared to the delayed, received pattern, received within the time interval of the whole code, only one pattern out of those received will identically match the transmitted pattern.

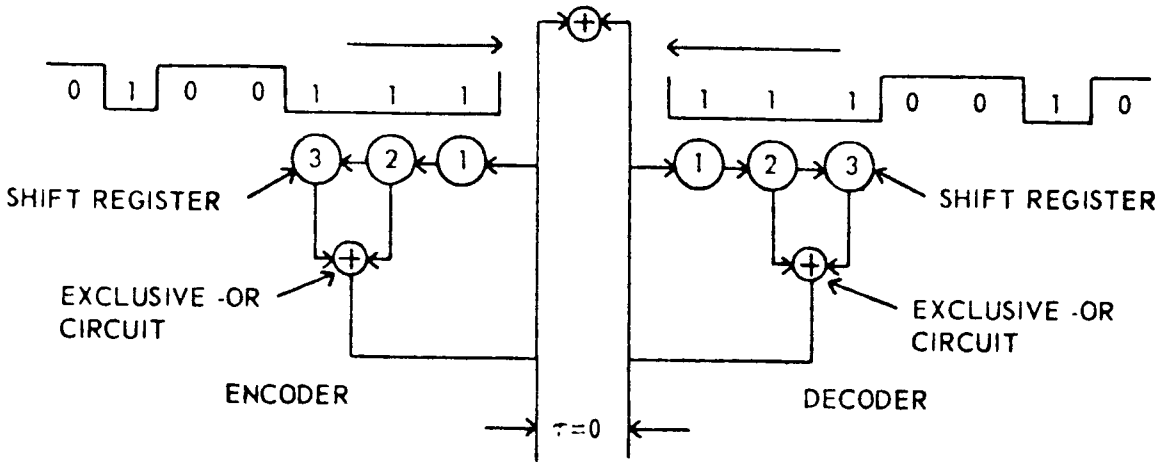

A. ZERO DISTANCE CASE

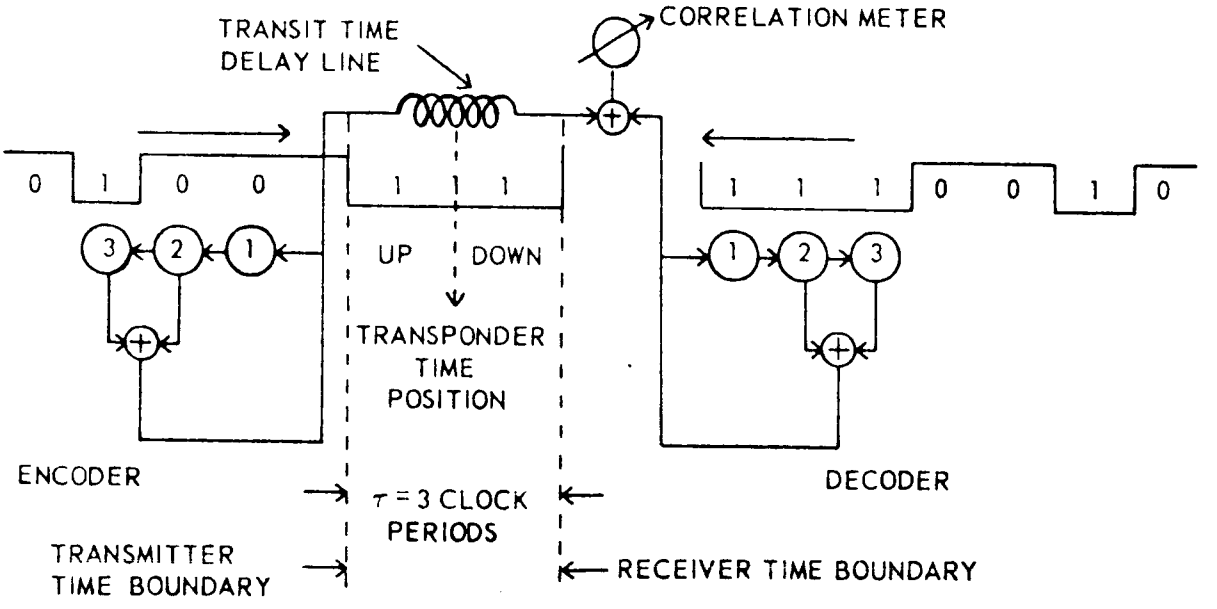

B. TRANSIT TIME DELAYED CASE

Figure 1.

The encoder which modulates the transmitter, and the decoder which is "pattern-matched" to the received code, are each composed of a three-stage shift register with appropriate feed-back. The contents of the shift register flip-flops correspond during each bit-time interval to one of the three-bit patterns described above, and determine unambiguously the particular bit in the long code that is being transmitted or received as the case may be. Thus, if transit time, τ, is zero (the encode and decode generators are synchronized and their outputs are compared with no time delay) then the instantaneous patterns in both generators are identical (Figure 1A). As the two generators are separated by a distance corresponding to a transit time of $\tau = K$ (a constant), and the decode generator is kept locked to each received bit, the contents of the decode generator at time τ correspond to the contents of the encode generator at time zero (Figure 1B).

If, on the other hand, the receiver space boundary moves towards (or away from) the transmitter boundary (equivalent to a continuous change in transit time) to simulate transponder velocity, and at the same time the decode generator creates bits at a faster (slower) rate to keep up with the faster (slower) rate at which bits are received, the previous arguments still hold. Thus, when the leading edge of a particular transmitted bit reaches the receiver time boundary, it is met, so to speak, by the corresponding bit from the decode generator—and the contents of the decode generator at time τ will match the previous contents of the encode generator at time zero. In brief, the measurement of τ by

determing the elapsed time between the formation of an encode pattern and the formation of an equivalent decode pattern, is closely related to simple pulse radar techniques, and is in essence independent of Doppler effects. In addition, the present techniques are compatible with long time constant, narrow bandwidth, phase-locked loop acquisition techniques with their improved signal-to-noise properties.

In the following sections, the simplified example of the encoder given above is expanded into a more practical encoder suitable for lunar and cisplanet range measurements.

3. Some Properties of Maximal Linear Codes

Some of the pseudo random noise (PN) properties that are exploited in the TIMER System are illustrated below. As shown in Figure 2A, if three flip-flops are connected as a shift register, and the outputs of the last two stages are combined in a circuit, designated $\oplus$ or exclusive-or circuit,* which feeds a one back to the input whenever the last two stages are in different states, a code is generated which has almost ideal correlation properties. The states of the several flip-flops are tabulated in the table given in Figure 2B, and the generated code corresponds to the contents of the third flip-flop as indicated in the table. This code is called a maximal linear binary code or m-sequence (see Bibliography).

*The exclusive–or function, $F = A \cdot \overline{B} + B \cdot \overline{A}$, is variously indicated in the technical literature as, exclusive–or, $\oplus$, mod–2 addition, modulo–2 addition, addition without carry and as a function which is true when two binary outputs disagree, and false when two binary outputs agree.

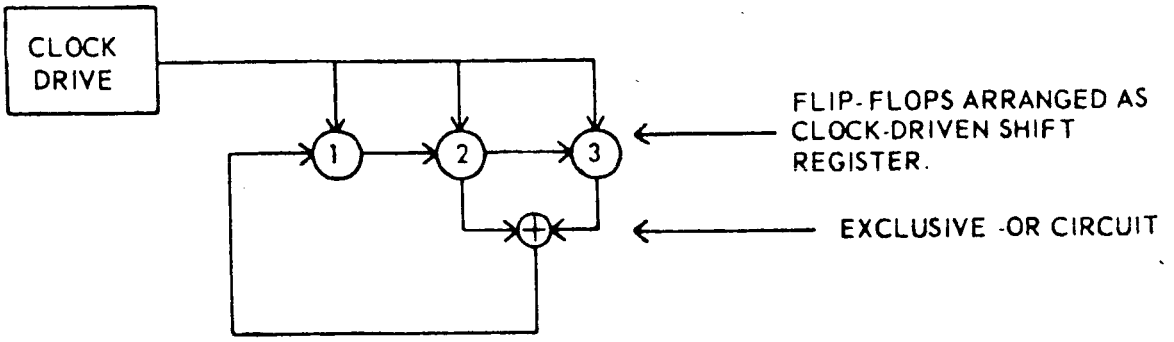

A. Three-Stage PN Generator

Time	State of Flip-Flops			Input to First Stage on Next Shift
	(1)	(2)	(3)	
t_0	1	1	1	0
t_1	0	1	1	0
t_2	0	0	1	1
t_3	1	0	0	0
t_4	0	1	0	1
t_5	1	0	1	1
t_6	1	1	0	1
t_7	1	1	1	0

B. Tabulation of Sequential States of Three Stage PN Generator

Figure 2

The output code is 1 1 1 0 0 1 0 and is repeated indefinitely as 1 1 1 0 0 1 0 1 1 1 0 0 . . . . . The length of the code, L, is $2^n - 1$ where n is the number of flip-flops (i.e. the number of stages in the shift register). If this code is shifted and added to the unshifted code, according to the rule that a one is generated wherever an element of the original and an element of the shifted identical code are different (exclusive-or or mod-2 addition), the result will always be the same code shifted again as shown below (except when the code is shifted zero, or a multiple of L bits):

```
original code                1 1 1 0 0 1 0 1 1 1 0 0 1 0 . . . . .
code shifted by one bit    ⊕ 1 1 1 0 0 1 0 1 1 1 0 0 1 . . . . .
resultant code               0 0 1 0 1 1 1 0 0 1 0 1 1 . . . . .

original code                1 1 1 0 0 1 0 1 1 1 0 0 1 0 . . . . .
code shifted by two bits   ⊕   1 1 1 0 0 1 0 1 1 1 0 0 . . . . .
resultant code                 0 1 1 1 0 0 1 0 1 1 1 0 . . . . .
                 "                 "               "
                 "                 "               "
                 "                 "               "
                 "                 "               "

original code                1 1 1 0 0 1 0 1 1 1 0 0 1 0 1 . . .
code shifted by five bits  ⊕           1 1 1 0 0 1 0 1 1 1 . . .
resultant code                         0 1 0 1 1 1 0 0 1 0 . . .
```

Thus, these PN codes, have the highly important property that when shifted and compared, mod-2 with the original code, the same code is

generated. And the resultant code has the same distribution of 1's and 0's as the original code which always has one more 1 than 0. It is noted here that the resultant code has four 1's and three 0's, and that a 1 indicates a disagreement, and a 0 indicates an agreement between the original and the shifted codes.

When the above-noted shift and add properties of the PN code are related to the simple binary correlation function described below, the nearly perfect correlation properties of PN codes become apparent. Binary correlation can be defined as follows:

$$\text{correlation} = \frac{\text{no. of agreements} - \text{no. of disagreements}}{\text{no. of agreements} + \text{no. of disagreements}}$$

or

$$C = \frac{A - D}{A + D}$$

Where C is the correlation factor, A the number of agreements, and D the number of disagreements. Inserting the numbers illustrated:

$$C = \frac{3 - 4}{3 + 4} = -\frac{1}{7} = -\frac{1}{L}$$

The correlation factor for 1 to L-1 shifts is always:

$$C = -\frac{1}{L} = \frac{-1}{2^n - 1}$$

because, for these codes, in general,

$$C = \frac{\frac{L-1}{2} - \frac{L+1}{2}}{L} = -\frac{1}{L}$$

In words, this is true because the exclusive -or, or mod-2 acquired code always contains one more disagreement than agreement; the acquired code is the original, but shifted, maximal linear pseudo random code.

Whenever the code is unshifted (or shifted a multiple of L bits) and added mod-2 to the original code (disagreements are 1's and agreements are 0's), all corresponding elements of the two codes agree, $A = L$, $D = 0$, and

$$C = \frac{A - D}{A + D} = \frac{L - 0}{L + 0} = 1$$

In short mathematical form, the correlation factor derived by the processes illustrated above and the conclusions reached, can be described, for PN codes, as:

$$C(k) = \frac{1}{L} \sum_{n=0}^{n=L-1-k} a_n \oplus a_{n-k}$$

$$= -\frac{1}{L} \text{ for } k = 1 \text{ to } L - 1$$

$$= 1 \text{ for } k = 0 \text{ or } mL$$

Where a_n is an element of the original code

a_{n-k} is an element of the shifted code

m is an integer

k is an integer corresponding to the number of shifts of the shifted code.

n is an integer.

To summarize, the correlation property of the PN code is essentially (for longer codes) zero when not matched exactly and unity when matched exactly. The PN codes possess nearly perfect correlation properties.

In the TIMER System, the local decoder code is "locked on" to the received code by automatic circuitry which measures the correlation

factor of the decoder code with the received code; the decoder code is driven by the received clock plus Doppler and shifted periodically by extra shifts until correlation is obtained. Long time constant integration and corresponding narrow bandwidth circuits enhance the signal to noise properties of this acquisition process.

Although a three flip-flop generator was selected as an example, codes of this type can be simply made for lengths up to $2^{34}-1$ (about 10^{10}) and longer. It is not always true that the mod-2 or exclusive-or circuit is connected to the last two stages; other connections, as described below and in the reports listed in the Bibliography, are necessary for certain lengths.

In Table 1, some of the simpler connections for m-sequences are listed.

TABLE 1
LINEAR MAXIMAL GENERATORS
WITH SIMPLE CONNECTIONS*

n	Stages Tapped	n	Stages Tapped
2	2, 1	18	18, 11
3	3, 2	20	20, 17
4	4, 3	21	21, 19
5	5, 3	22	22, 21
6	6, 5	23	23, 18
7	7, 5	25	25, 22
9	9, 5	28	28, 25
10	10, 7	29	29, 27
11	11, 9	31	31, 28
15	15, 14	33	33, 20
17	17, 14		

*See Bibliography, Peterson, Appendix C.

4. Some Properties of Acquirable Codes

To handle longer codes practically, they are broken up into shorter "acquirable" codes. These longer codes, composed of the shorter codes, can be relatively easily generated as illustrated in Figure 3. The generated code, W_n, is equal to $x \oplus yz$ – it is the mod-2 sum of the x code with the y "logical and" z codes.

For the example illustrated in Figure 3, the overall code length L, is the product of the shorter codes $L_x L_y L_z$, or $(2^3 - 1)(2^4 - 1)(2^5 - 1) = 3255$ bits. To acquire such a code, the shorter codes are "locked on"

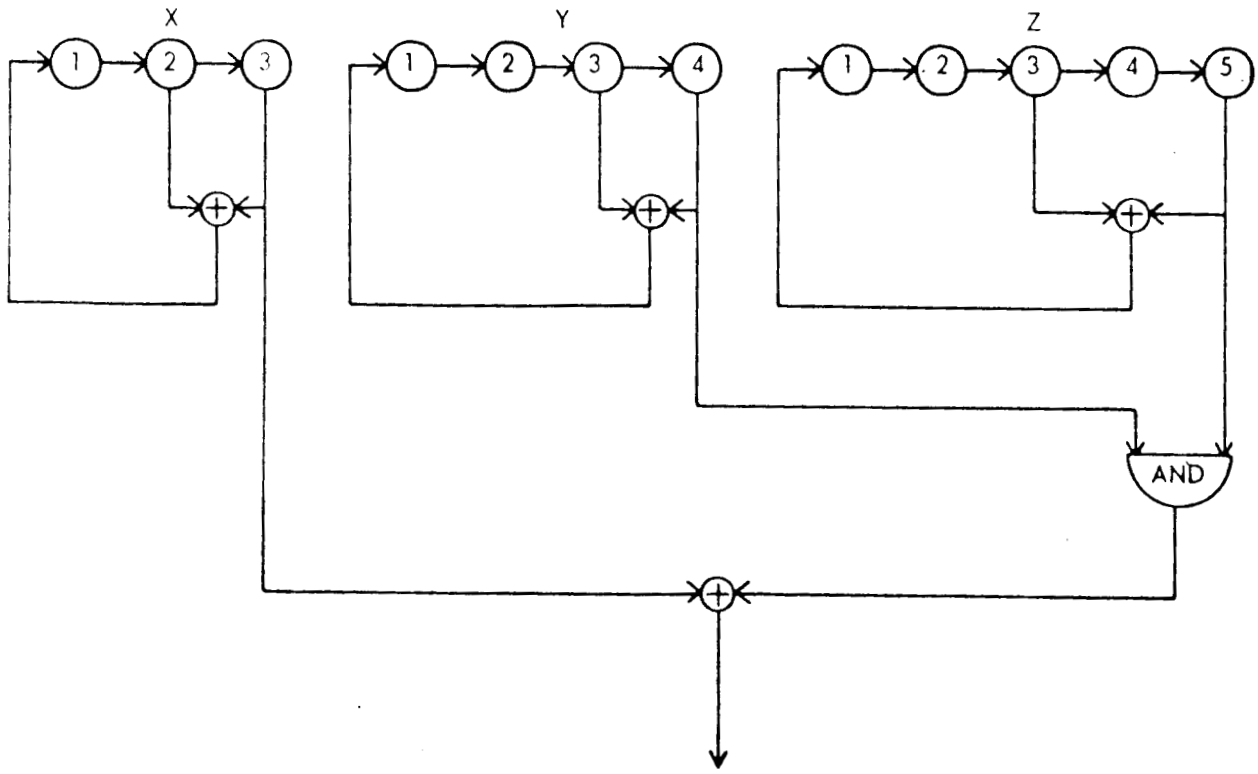

OUTPUT CODE $= W_n = X \oplus YZ$

Figure 3. Acquirable Code Generator

to the total received code, W_R, usually sequentially, and the maximum number of shifts necessary to acquire the long code is $Lx + Ly + Lz$ or $7 + 15 + 31 = 53$ shifts – the x_m code is correlated with W_R first, then the $x_m \oplus y_m$ combined codes, and finally the $x_m \oplus z_m$ codes; after this process W_m the complete decoder code, $(x_m \oplus y_m z_m)$ is completely "matched" or correlated with the received code, W_R.

The almost ideal correlation levels of $-\frac{1}{L}$ and 1 for single-code to single-code correlation, are reduced to approximately $-\frac{1}{L}$ and $\frac{1}{2}$ for the "acquirable-code" correlation processes described above. As shown below, the "acquirable-code" acquisition process results in a change from a sequence of approximately random 1's and 0's (which exhibit nearly zero correlation) to a sequence of 1's and 0's of approximately $\frac{1}{4}$ ones and $\frac{3}{4}$ zeros (which exhibit nearly $\frac{1}{2}$ correlation), when a given short code is correlated with the longer code, For example,

$$W \oplus x = x \oplus yz \oplus x = yz$$

and the probability code y and code z have the value of 1 at any time is approximately 1/2 times 1/2 or 1/4. Thus

$$C = \frac{A - D}{A + D} = \frac{3/4 - 1/4}{1} = \frac{1}{2}$$

Also, if the x and y codes are correlated,

$$\begin{aligned} W \oplus x \oplus y &= x \oplus yz \oplus x \oplus y \\ &= y \oplus yz \\ &= y \cdot \overline{yz} + \overline{y} \cdot yz \quad \text{(by expansion)} \\ &= y \cdot (\overline{y} + \overline{z}) = y \cdot \overline{z} \quad \text{(by DeMorgan's theorem)} \end{aligned}$$

and again the probability that y "logical and" z have the value of 1 at any time is approximately 1/4 as above.

In the TIMER System, negative logic and -6 volts levels for true statements are used. As shown later, -3 volts indicate zero correlation, and -1.5 volts indicates 50% correlation. Automatic shifting and recognition circuitry acquire and lock the decoder codes with the received code, by measuring the change in voltage level from -3v to -1.5 volts. When all codes are acquired, the correlation indicator goes to 0 volts, i.e. 100% correlation.

5. Overall Description

By a simple extension of the principles described in the section called the Basic TIMER System, the advantages of acquirable codes can be exploited in the TIMER System as illustrated in Figure 4. Just as each one of the seven possible three bit words in the three flip-flop PN generator determines the bit being transmitted, so each of the four bit words and five bit words respectively for the four and five bit flip-flop PN generators are definitive. And the summation 12 bit word, composed of the 3, 4, and 5 bit words, defines exactly the particular bit of the 3255 bit code that is being transmitted. A timer can be initiated at the instant in time that a particular 12 bit pattern in the encoder generators is formed, and this pattern can be stored in a register; the timer can be stopped at the instant in time that the decoder generators, previously locked to the received code, match the stored encoder pattern. The timer, then, will indicate the transit time.

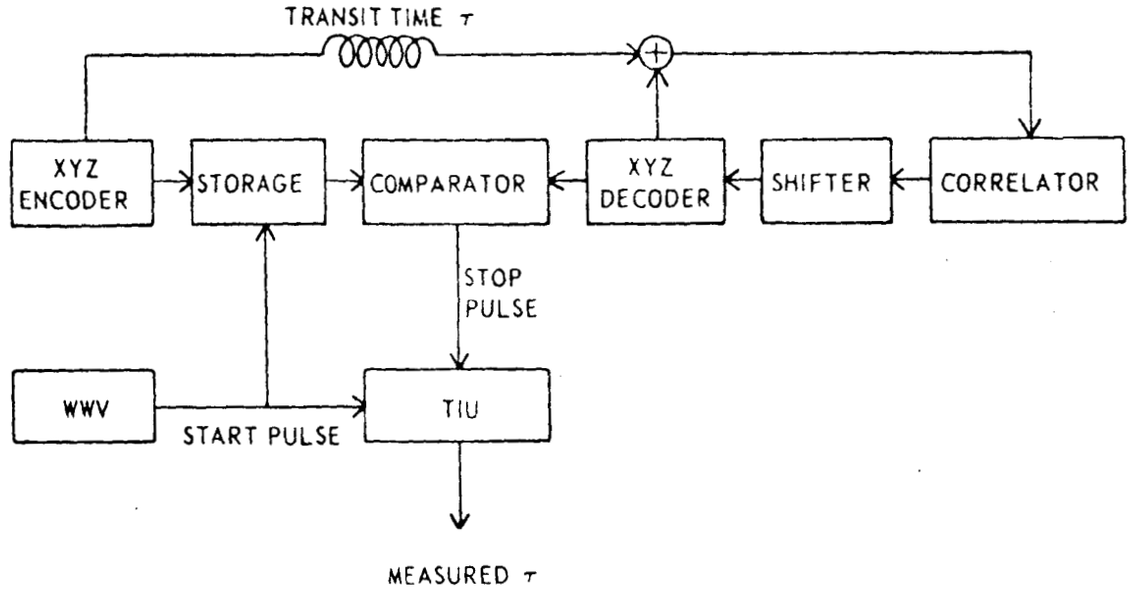

Figure 4.

The timing actions that take place are the following: a demand pulse synchronized for timing purposes to WWV, stores the existing 3 bits of the X_n code, 1 1 1 0 0 1 0, in a storage register; simultaneously the existing 4 bits of the y_n code 1 1 1 1 0 0 0 1 0 0 1 1 0 1 0, and the existing 5 bits of the Z_n code 1 1 1 1 1 0 0 0 1 1 0 1 1 1 0 1 0 1 0 0 0 0 1 0 0 1 0 1 1 0 0, are also stored in the storage register. After the elapse of transit time τ, the 12-bit contents of the X_m, Y_m, and Z_m decode generators, will match the stored patterns from the encode generators. Figure 5 shows the form factors of these codes in various combinations, as displayed on an oscilloscope. Since the WWV demand pulse started a time interval unit (TIU) at the instant the encoder patterns were stored, and since the comparator unit stopped the TIU at the instant the

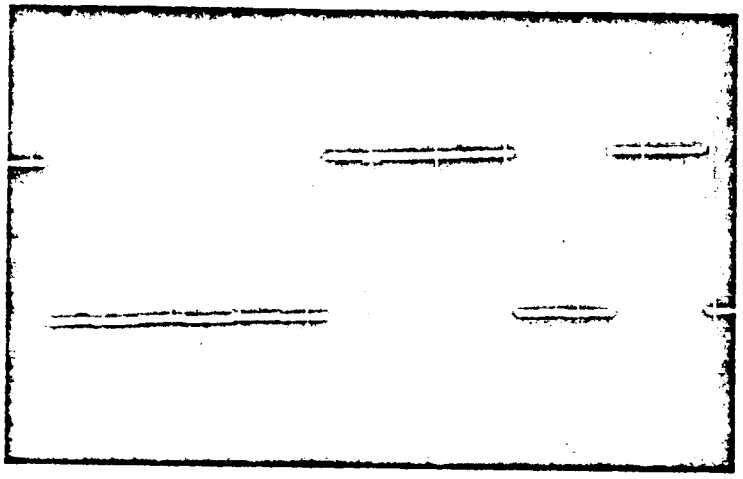

1 1 1 0 0 1 0

7 Bit

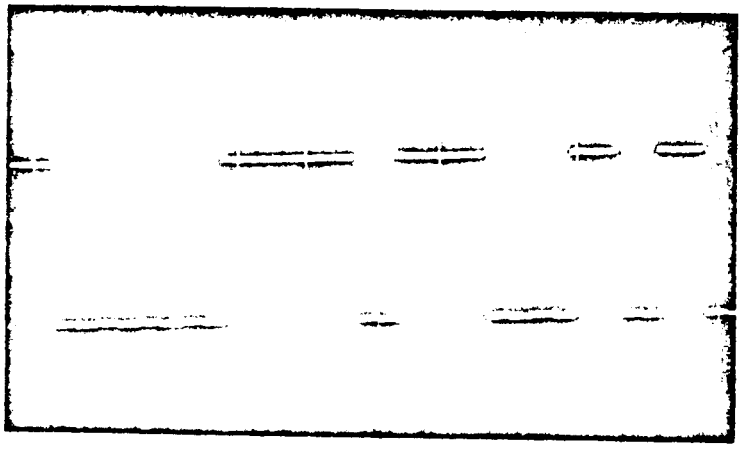

1 1 1 1 0 0 0 1 0 0 1 1 0 1 0

15 Bit

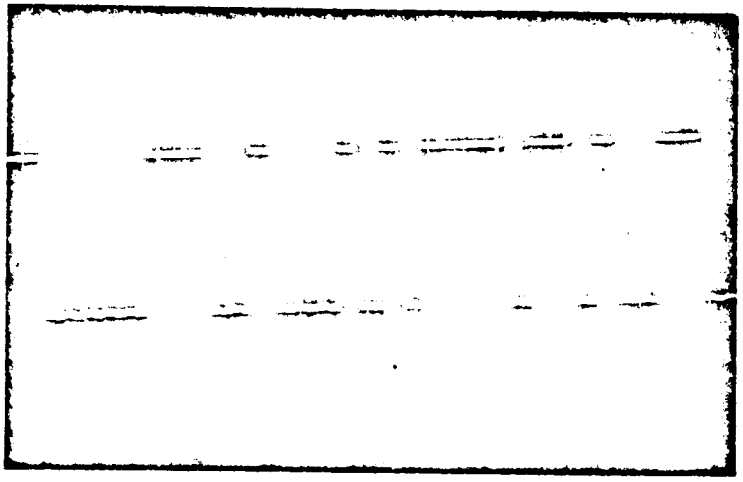

111 11000 11 0 11 1 0 1 0 1 0 0 0 1 0 0 101 100

31 Bit

For all codes $\begin{cases} \text{Clockrate} = 4\ \text{Kc} \\ 1 = -6\text{v} \\ 0 = 0\text{v} \end{cases}$

Figure 5a.

$x \oplus y$

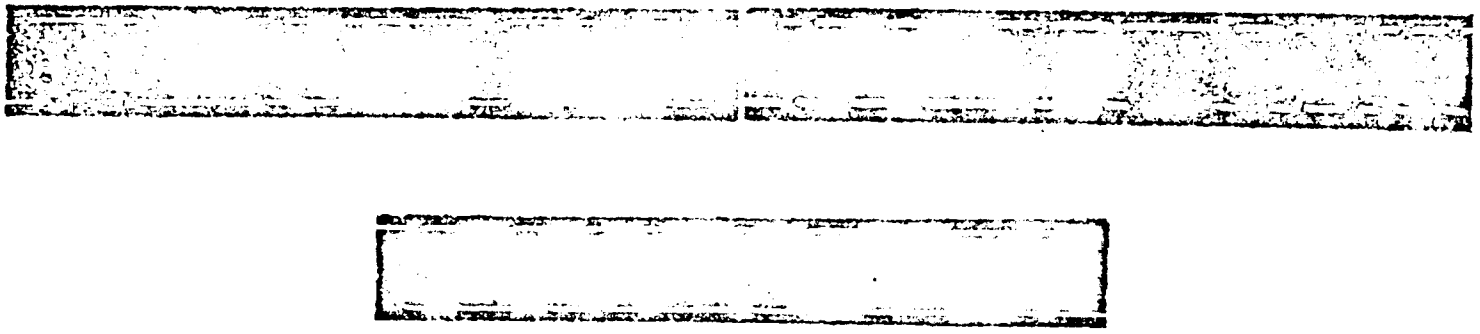

Figure 5b.

$x \oplus y$

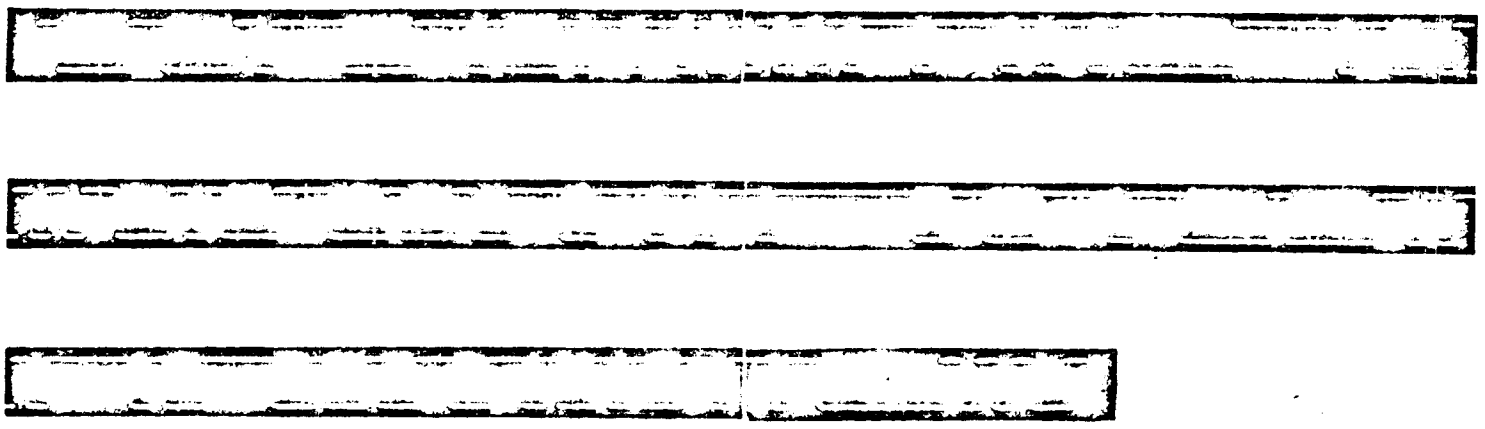

Figure 5c.

decoder patterns matched the stored patterns, the TIU, a simple fixed frequency counter, determines the transit time in terms of the invariant speed-of-light constant. In the Hybrid application of the TIMER System, the fine stop control of the TIU is controlled by the zero crossing of a relatively high frequency sidetone; the TIMER is used to unambiguously "ready" the TIU for the stopping action of the sidetone.

5.1 Correlation Circuit

An important unit in the TIMER System is the correlator which integrates the mod-2 sum of the received code and the decoder code. When the mod-2 sum is a series of approximately equal numbers of 1's and 0's, the codes are uncorrelated; a selectable and relatively long time constant RC circuit averages the -6v and 0 volt levels corresponding respectively to 1's and 0's and indicates the average value of -3 volts. As noted before, the same RC circuit indicates a level of approximately -1.5 volts when one of the short codes is correlated. As each short code is correlated, an automatic shifting process is terminated automatically. After each short code is acquired by this process, a manual switch (which will be automated for the systems used in the tracking network) is thrown to start the automatic acquisition of another short code. Several selectable time constants for integration are available depending upon signal energy levels. In the actual Hybrid System, the lengths of the x, y, and z codes are selectable according to mission requirements for unambiguous ranging; the clock rates, 8, 32, 160, 800, or 4000 cps are also selectable according to range requirements.

The correlation process is, of course, completed before any transit time measurements are made. An automatic lock prevents range data recording unless the correlator unit indicates 100% lock-on.

6. Hybrid System

The Hybrid System is essentially an extension of existing range and range rate units. Two of the major spacecraft ranging systems are the Sidetone type designed and successfully used by the Goddard Space Flight Center and the PN type under development by the Jet Propulsion Laboratories. Since both of these types are described in much detail in a number of the reports given in the Bibliography, the discussions in this report are directed primarily towards describing the technical units employed in the TIMER System. Nevertheless, a few statements about current ranging systems will help to define the Hybrid System in a comparative sense.

The Sidetone ranging system as designed by GSFC employs a number of sidetones whose frequencies are integrally related by a factor of 4 or 5. These sidetones, suitably modulated on a carrier, are transmitted, coherently transponded, and received. After phase-lock loop acquisition of each sidetone in the ground receiver, range measurements are made in essence by measuring the elapsed time for all sidetones transmitted in alternately reversed phases to be received in alternately reversed phases after being transponded in a phase coherent manner in the spacecraft. The lowest sidetone employed is selected to be unambiguous for

the distances to be measured (transit time, τ, is less than the period, T, of the lowest frequency sidetone).

The PN ranging system under development by JPL utilizes a PN code imposed upon a clock frequency, equivalent to a single sidetone, and, after phase locked loop acquisition of the clock frequency and correlation of the PN code, range measurements are made, in essence, by determining the phase difference between the transmitted clock and received clock, and by computing the equivalent transit time values of each shift of the short codes which compose the longer acquirable code; after this process, range information is updated by adding in distance changes determined by counting Doppler cycles.

The Hybrid System, in its optimum form, utilizes several sidetones in the manner of the GSFC Range and Range Rate System, and, in addition, imposes a PN code on the lowest sidetone employed to increase non-ambiguous ranging distance. Range measurements are made by direct measurements of the elapsed transit time.

With this orientation, it is noted that the stop pulse action illustrated in the block diagram of Figure 4 is improved by the phase definition of the 20 and 100 Kc sidetones (see Appendix). The Hybrid System thus utilizes sidetone technology and PN technology to determine range by direct transit time measurements. The Hybrid System capitalizes upon both the advantages of sidetone ranging which permits fine distance definition under restricted bandwidth conditions, and upon the advantages

of pseudo random encoding which permits unambiguous ranging at long distances without the need for extremely low frequency sidetones and their associated phase-locked-loop acquisition problems.

The Hybrid System, optimally, utilizes pseudo random encoding of a sidetone, for example 4 Kc, and also utilizes higher sidetones of 20 Kc and 100 Kc for fine distance measurements. It could be used equally well with a single clock frequency, (PN only ranging), but the higher clock frequency necessary for fine ranging, and the higher frequency code would occupy more spectral bandwidth than necessary; longer codes and longer or more complex acquisition processes would also be necessary.

As presently designed, the GSFC Range and Range Rate System solves the ambiguity problem by use of a novel technique of alternately phase reversing each higher frequency transmitted sidetone; this technique permits each half period of a lower frequency sidetone to gate "on" the next higher frequency half period of sidetone at the receiver. By properly arranging a series of flip-flops, the fine determination of range measurement is held to the phase definition of the 100 Kc sidetone which is $\pm 0.36^\circ$ in the GSFC Range and Range Rate System; this definition is equivalent to a time error of 10 nanoseconds or about five feet of distance. This ultimate distance definition was practically achieved in tracking the Syncom at a range of about 20,000 miles. The Hybrid System retains this capability but utilizes the PN code to fix the time position of the first 4 Kc gate – the 20 Kc and 100 Kc gates then function

as in the present system. In Appendix A, the fundamental units for ranging with the TIMER System are illustrated with their logic equations.

6.1 Cisplanet Ranging

A question arises as to how far the long code is shifted when one of the shorter codes is shifted a given amount. In the TIMER System no computation based on this analysis is employed at cislunar distances. At cisplanet ranging distances some of the TIMER System technology can be profitably employed by utilizing this computation. In the latter case, it is desirable to make range measurements as soon as the ground-satellite-ground loop is filled with RF energy and the decode generator is matched to the received encoded signal (i.e. the received signal is acquired), without waiting the additional time required for a given generator pattern to travel the loop distance. Very briefly, this result can be accomplished by employing the previously described encoder register plus an additional decoder storage register. Range measurements can then be made by measuring the phase difference between encode-decode clocks, and by determining the phase or shift distance of each encode-decode short code one to another. The advantages of this method at cisplanet distances are: one, no additional time beyond acquisition time is required for ranging; two, all ranging measurements are independent; three, code reacquisition is not necessary to obtain independent measurements; and four, sampling rates can be increased as far as practically required.

In order to utilize the cisplanetary techniques outlined above, the contents of the decode generator, as well as the contents of the encode generator, must be stored in a storage register at demand time. Each decoder short code is shifted until the encode-decode short codes match; the number of shifts of each code plus the encode-decode clock phase difference at demand time determine spacecraft range at demand time minus D/C where C is the velocity of light and D is the one-way distance to the spacecraft. Either of the following two equations, derived by means of the Chinese Remainder Theorem of Number Theory, determines the equivalent shift of the long code in terms of the individual shifts of the short codes.

$$-465 \times 2 \text{ (x shift)} - 217 \times 2 \text{ (y shift)}$$

$$+105 \times 13 \text{ (z shift)} = \text{(total code shift) mod } 3255$$

$$\text{or: } 465 \times 5 \text{ (x shift)} + 217 \times 13 \text{ (y shift)} + 105 \times 13 \text{ (z shift)}$$

$$= \text{(total code shift) mod } 3255$$

It is noted that, the actual computation of distance can be performed at a central computer, instead of at each network station, with little loss in communications efficiency because the number of bits required to transmit the distance information is practically equal to the number of bits required to transmit the code shift and phase information.

For completeness the following fact is noted: if it is desired to shift the long code a given amount, say N shifts, each short code is shifted $N_{(\text{mod short code})}$. For example, if the long code is to be shifted an

amount 33, the x code is shifted $33_{\text{mod } 7}$ or 5, the y code $33_{\text{mod } 15}$ or 3, and the z code $33_{\text{mod } 31}$ or 2.

6.2 Conclusion

In conclusion, this report has attempted to describe the principles and practical design features of an improved system for spacecraft ranging with a hybrid combination of sidetones and encoded signals. Only by integrating the information presented here, with other information available from the reports listed in the Bibliography, can a complete understanding of all the units necessary for a practical ranging system be obtained. In this brief presentation of principles and practice no deliberate attempt has been made to minimize the essential complexity of spacecraft ranging. By its very nature, spacecraft ranging draws on the ultimate of current technology. This report is intended to enhance this technology by one more contribution, and will have succeeded only when the principles presented here are reduced to practice and are utilized in the range and range rate network.

APPENDIX I

This Appendix describes the basic, practical, logic circuits for a Hybrid type ranging system employing PN TIMER and Sidetone techniques. Design criteria and operational feasibility are demonstrated.

Figure 1 is a simple block diagram of the TIMER System. Sidetones of 100, 20, and 4 Kc are produced in the Sidetone Generator. The 4 Kc signal is used to drive the Encoder which produces the PN 3255-bit code and is also used as the phase modulated subcarrier for the PN code. The 100 Kc, 20 Kc and PN Code plus 4 Kc are then phase modulated on a carrier and transmitted. The signal is received and coherently transmitted back to the ground by the Transponder. This signal is received by the ground equipment and from it is derived the Decoder Clock frequency (Encoder Clock frequency plus Doppler) and the 100 Kc and 20 Kc Sidetones plus Doppler which are fed to the appropriate phase-locked loops. The Decoder produces a shifted Code identical to that of the Encoder but produces code bits at the clock-plus-Doppler frequency. The Correlator locks the decoder generator to the received code and then by means of the Transit Time circuit, determines the range. Note that the Sidetone Generator, Transmitter, and Receiver equipment shown (but not the PN coders and code modulators and demodulators) already exist as part of the Goddard Range and Range Rate System.

Figure 2 shows the system components in more detail. The TIMER System can be broken down further into the following subsystem designations: the transmitter subsystem which includes the transmitter, the W_n * Encoder Generators, the W_n Code Combiner, and the Mod-2 Modulator; the receiver subsystem which includes the receiver, the W_m Decoder Generators, the W_m Code Combiners, and the Countdown Generators; the correlator which includes the Correlation Indicator and Shift Pulse Generator; and the ranging subsystem which includes the Comparator, Stop Pulse Generator, and the Time Interval Unit.

Some of the functional operations of the system components are the following: A local 1 MC oscillator and frequency synthesizer are used to provide frequencies of 100, 20, and 4 Kc. The 4 Kc square wave which is synchronized with the 20 Kc, 100 Kc and WWV frequencies is used to drive the Wn Encoder Generator, the Mod-2 Modulator, and the Comparator.

The W_n Encoder Short-Code Generators function to produce the X_n, Y_n, and Z_n short codes and provide outputs for operating the storage registers in the Comparator, and for combining codes in the W_n Code Combiner. The Code Combiner provides the output $X_n \oplus Y_n Z_n$ for operating the Mod-2 Modulator. Additional clock energy, not illustrated, is added to the 4 Kc subcarrier to permit 4 Kc clock phase-lock-loop acquisition in the receiver, independent of code lock-on.

*The subscripts n and m are used throughout the Appendix to denote encoder and decoder related items, respectively.

The W_m Decoder Short-Code Generators function to produce the X_m, Y_m, and Z_m short codes and outputs for operating the Comparator gates, the W_m Code Combiners, and the Countdown Generators. The W_m Code Combiner outputs, $X \oplus YZ$, $X_m \oplus Y_m$, and $X_m \oplus Z_m$ are used for correlation indication. The Countdown Generators produce countdown pulses of 3255:1, 217:1, and 105:1 to provide different shift rates for the Shift Pulse Generator.

The Correlation Indicator serves to detect and display correlation of the received code with W_m.

Correlation is obtained by shifting W_m with respect to the received code by means of extra shift pulses (added to the clock plus Doppler shift pulses) from the Shift Pulse Generator.

The Comparator is used to compare the transmitted code with the received code thereby providing the time basis for range determination; the Comparator also serves to activate the Stop Pulse Generator. Actual range is determined by the Time Interval Unit which is activated by a WWV demand pulse and deactivated by the Stop Pulse Generator.

The sequence of operations is as follows: The output of the Mod-2 Modulator, $W_n \oplus C1$, where C1 is the 4 Kc System Clock, together with the 100 and 20 Kc frequencies, is phase-modulated on a carrier and transmitted.

The complex signal is coherently transponded and received by existing equipment in the Goddard RARR system and, after proper conditioning,

is detected by the 100, 20, and 4 Kc phase locked loops. Each loop contains the particular sidetone plus its doppler frequency. The received 4 Kc Clock plus Doppler constitutes the Decoder clock; this signal also contains the received PN code information. Initially, the received code and the local code generated by the Decoder generators, W_m, are uncorrelated, i.e., are out of phase by an undetermined number of bits.

The correlation condition is detected and displayed by the correlation indicator, which determines sequentially the correlation levels of the decoder X_m, Y_m, and Z_m short codes, with respect to the total received combined code. The short codes are actually correlated as X_m, $X_m \oplus Y_m$, $X_m \oplus Z_m$, and $X_m \oplus Y_m Z_m$, in sequence.

The shift pulse generator shown is used to shift, separately, the X_m, Y_m, and Z_m short codes. When one of these short codes is correlated with its component in the received code, the Shift Pulse Generator is automatically turned off by a pulse generated by the Correlation Indicator. This allows the shift pulse to be directed by manual switching to the other W_m short code generators. Because of this self-turn-off feature, no shift pulses are generated after complete correlation is obtained.

When complete correlation exists and on demand from WWV, the Time Interval Unit is activated; at the same time the 12-bit Encoder word is stored in the registers of the Comparator. When the outputs of the registers of the Decoder generators (running synchronous with the

received code) match the stored code, a stop pulse is generated which readies the Time Interval Unit for the stop command from the highest sidetone used. The time interval reading obtained is the range in transit time units.

Figure 3 shows the Encoder-Decoder short code generators. The design of each is such that a maximal linear short code is generated, i.e., a code of 2^n-1 bits is obtained, where n is the number of stages in the shift register. Thus the X, Y, and Z short codes contain, respectively, 7, 15, and 31 bits. These generators are implemented with modulo-2 (exclusive "or") logic by means of the gated feedback from appropriate stages of the register. At (4), a logical "1" will be generated when the outputs of each stage differ and a logical "0" when the outputs are alike (either two "1's" or two "0's"). Without input (3) (a self-starting mechanism) the outputs at (4) are represented by the functions:

$F(x) = b_x \oplus c_x$, $F(y) = c_y \oplus d_y$, $F(z) = c_z \oplus e_z$, where $F(x)$, $F(y)$, $F(z)$ represent the logic functions, respectively of the x, y, and z short code generators, and b_x, c_x, c_y, d_y, c_z, and e_z represent outputs of particular stages of those generators. Note that for the maximal linear Z-code, outputs c and e (stages 3 and 5) are tapped rather than d and e, (the last two stages).

For system reliability, a self-starter is incorporated into the design of each Short Code Generator to assure code generation each time the system is turned on. A logical "1" will be generated by the self-starter at (3) for all conditions except when the reset outputs ($\overline{a}$, $\overline{b}$, $\overline{c}$) of

the generators are all in the "1" state (or the set outputs are all "0's"). Then a logical "0" is generated at (3) which provides proper gating at gate (4). Without this feature the codes would not be generated if all stages were in the zero state at turn-on. With the self-starter, the functions of X, Y, and Z at (4) are:

$F(x) = b_x \oplus c_x + \bar{a}_x \cdot \bar{b}_x \cdot \bar{c}_x$, $F(y) = c_y \oplus d_y + \bar{a}_y \cdot \bar{b}_y \cdot \bar{c}_y \cdot \bar{d}_y$, $F(z) = c_z \oplus e_z + \bar{a}_z \cdot \bar{b}_z \cdot \bar{c}_z \cdot \bar{d}_z \cdot \bar{e}_z$.

Figure 4.1 and 4.2 show the W_m (Decoder) Sub-Code Combiners. Each Sub-Code combiner adds, modulo-2, the X_m short code with one of the other short codes. The output at 1.3 is the $X_m \oplus Z_m$ sub-code containing 217 bits, i.e., the X_m short code length (7 bits) times the Z_m code length (31 bits). The output at 2.3 is the $X_m \oplus Y_m$ sub-code containing 105 bits, i.e., the X_m short code length times the Y_m short code length (7×15).

The long-code combiner shown in Figure 4.3 illustrates the circuitry used to combine the X, Y, and Z codes into the long code $X \oplus YZ$. This diagram is applicable to both the encoder combiner which generates W_m, and the decoder combiner which generates W_m.

The long-code combiner generates by simple logical addition and modulo-2 logic the combination of the three short code generators. The output at 3.5 is the long code $X_n \oplus Y_n Z_n$ (for the encoder) and $X_m \oplus Y_m Z_m$ (for the decoder) containing 3255 bits. i.e., the product of the X, Y, and Z short code lengths, $7 \times 15 \times 31$.

The Mod-2 Modulator in Figure 5 combines, modulo-2, the clock, C1, with the long code, $W_n = X_n \oplus Y_n Z_n$, giving at (3) $W_n \oplus C1$. Additional

Clock energy is added (not shown) to permit received clock phase-lock-on independent of code correlation.

In Figure 6, the Countdown Generators generate a countdown pulse of 3255:1 at (6) each time the code is repeated and all generators contain a logical "1" in the set position; a countdown pulse of 105:1 at (3) when all the set outputs of the X_m and Y_m generators are in the logical "1" position; and a countdown pulse of 217:1 at (8) when all the set outputs of the X_m and Z_m generators are in the logical "1" position.

Figure 7 shows both the Correlation Indicator and the Shift Pulse Generator. By combining, separately, X_m, $X_m \oplus Y_m$, $X_m \oplus Z_m$ with W_R (the received code), mod-2, and then integrating, correlation of each W_m-short code with the W_R-long code can be detected and displayed on the meter at (4). When the codes are not correlated, the voltage reading at (4) is approximately -3 volts. When one of the W_m-short codes is correlated with its corresponding component in the received W_R-long-code, the voltage rises to approximately -1.5 volts. Note that on complete correlation of W_m with received W_R, the voltage reading at (4) is 0 V, (because with mod-2 logic, all ones or all zeros gives an output of 0 volts.)

The Schmitt Trigger, sensitive to the change in Voltage (from -3v to -1.5 volts), triggers gate (5) which then turns off gate (10), stopping the shift pulse (9). The output at (12) then changes from $F(12) = CD \cdot \overline{I} + C1$ to $F(12) = C1$ (where CD = Countdown, I = integration, and C1 = clock).

At complete correlation, the Decoder runs synchronously with the received code at the received clock-plus-Doppler rate.

The Comparator, Stop Pulse Generator, and Time Interval Unit shown in Figure 8 function to provide a range reading.

On demand from WWV, the TIU is activated and simultaneously gate (12) is triggered, stopping the system clock input. The transmitted code (the 12-bit Encoder word) is stored in the registers of the Comparator. The demand pulse is timed to occur on the negative going portion of one of the 4 Kc square wave clock cycles or 125 microseconds (1/2 period) after the previous positive going portion has shifted both the short-code generators and Storage Registers. This technique insures that the Storage Registers contain the proper transmitted code, i.e., the three, four, and five-bit Encoder words. The next shift changes the contents of the generators but does not change the contents of the registers. This shift occurs 125 microseconds after demand time, on the next positive going portion of the 4 Kc square wave. Note that during the 125 microsecond period previous to demand time, the Encoder three, four, and five-bit words have been "on the air." The total transit time τ, is, therefore, the measured transit time, τ', plus 125 microseconds.

By means of the Comparator gates, the locally generated model of the received code is compared with the stored code. When matched, a reset pulse is generated which turns off FF_1. Simultaneously, FF_2 is turned on. When the positive going portion of the 20 Kc frequency tone

occurs, FF_2 is turned off. At the same time, FF_3 is turned on. In the manner described above, the 100 Kc frequency tone will turn off FF_3 and simultaneously the TIU will be deactivated. A constant time interval consisting of the sum of the half periods of the 100, and 20 Kc sidetones is included in the above transit time reading. This constant time is subtracted to obtain the true distance in transit time units.

BIBLIOGRAPHY

1. "Development of a Range and Range Rate Spacecraft Tracking System," Habib, Kronmiller, Engles, Franks, GSFC Technical Note D-2093, August 1963.
2. "Syncom Range and Range Rate System Design Evaluation Report," 6 October 1961, Contract No. NAS 5-1605, Space Technology Laboratories, Inc.
3. "Goddard Range and Range Rate System Design Evaluation Report," 23 November 1962, Contract No. NAS 5-1926, Motorola, Inc.
4. "High Accuracy Satellite Tracking Systems," 31 March 1961, Contract No. NAS 5-1187, Advanced Communications Research and Development (ADCOM, Inc.).
5. "High Accuracy Satellite Tracking Systems," 30 September 1961, Contract No. NAS 5-1187, Advanced Communications Research and Development (ADCOM, Inc.).
6. Error Correcting Codes, W. W. Peterson, M.I.T. Press and John Wiley and Sons, Inc., 1961.
7. "On Coded Phase Coherent Communications," A. J. Viterbi, Jet Propulsion Laboratory Technical Report 32-35.

8. "Coding Theory and Its Application to Communication Systems," Baumert, Easterling, Golomb and Viterbi, Jet Propulsion Laboratory Technical Report 32-67.

9. Research Summaries 36-1 to 36-14, Jet Propulsion Laboratory, California Institute of Technology, Pasadena, California.

10. Space Program Summaries 36-11 to 36-20, Jet Propulsion Laboratory, California Institute of Technology, Pasadena, California.

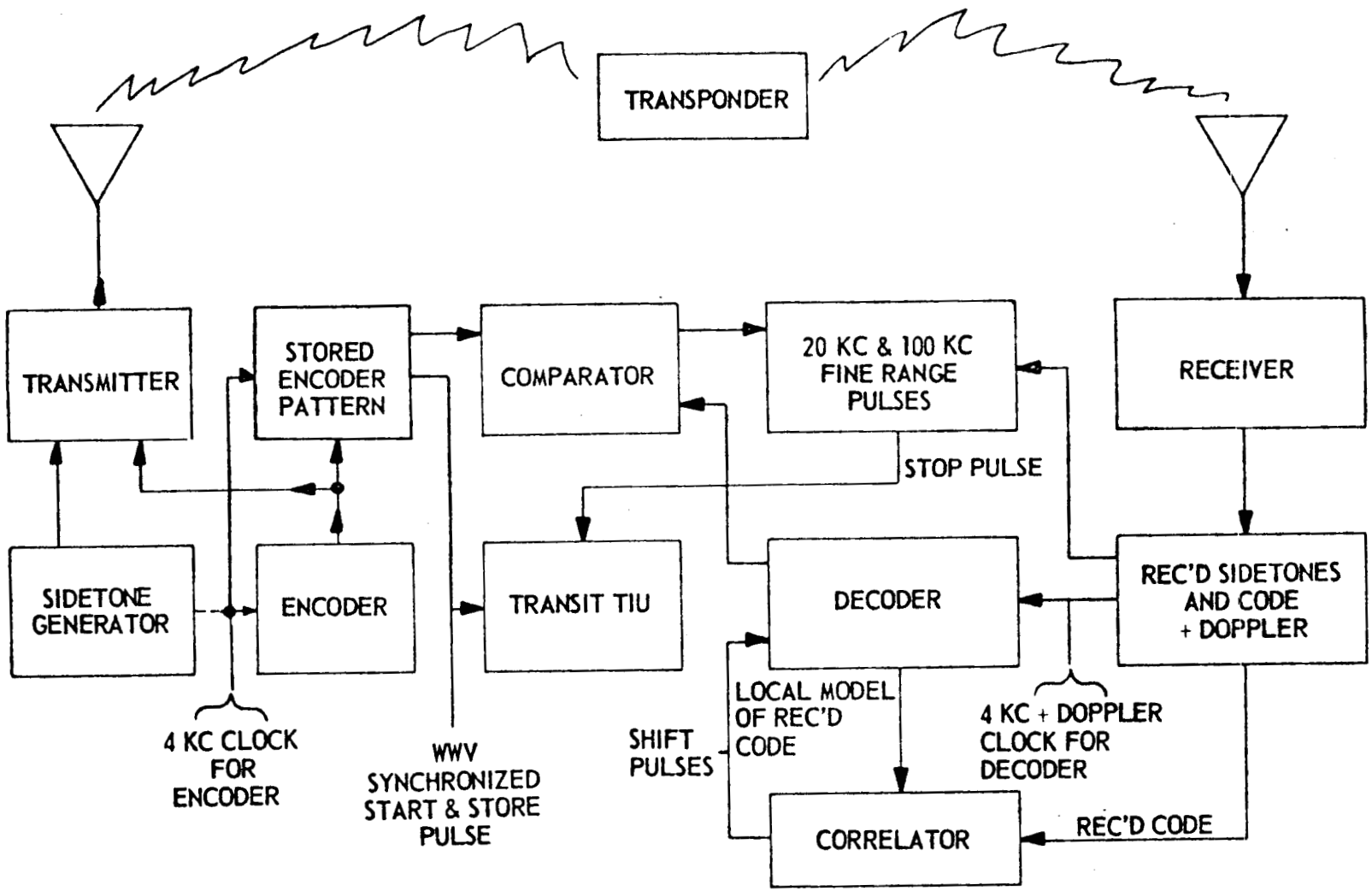

Figure 1. Simplified System Block Diagram

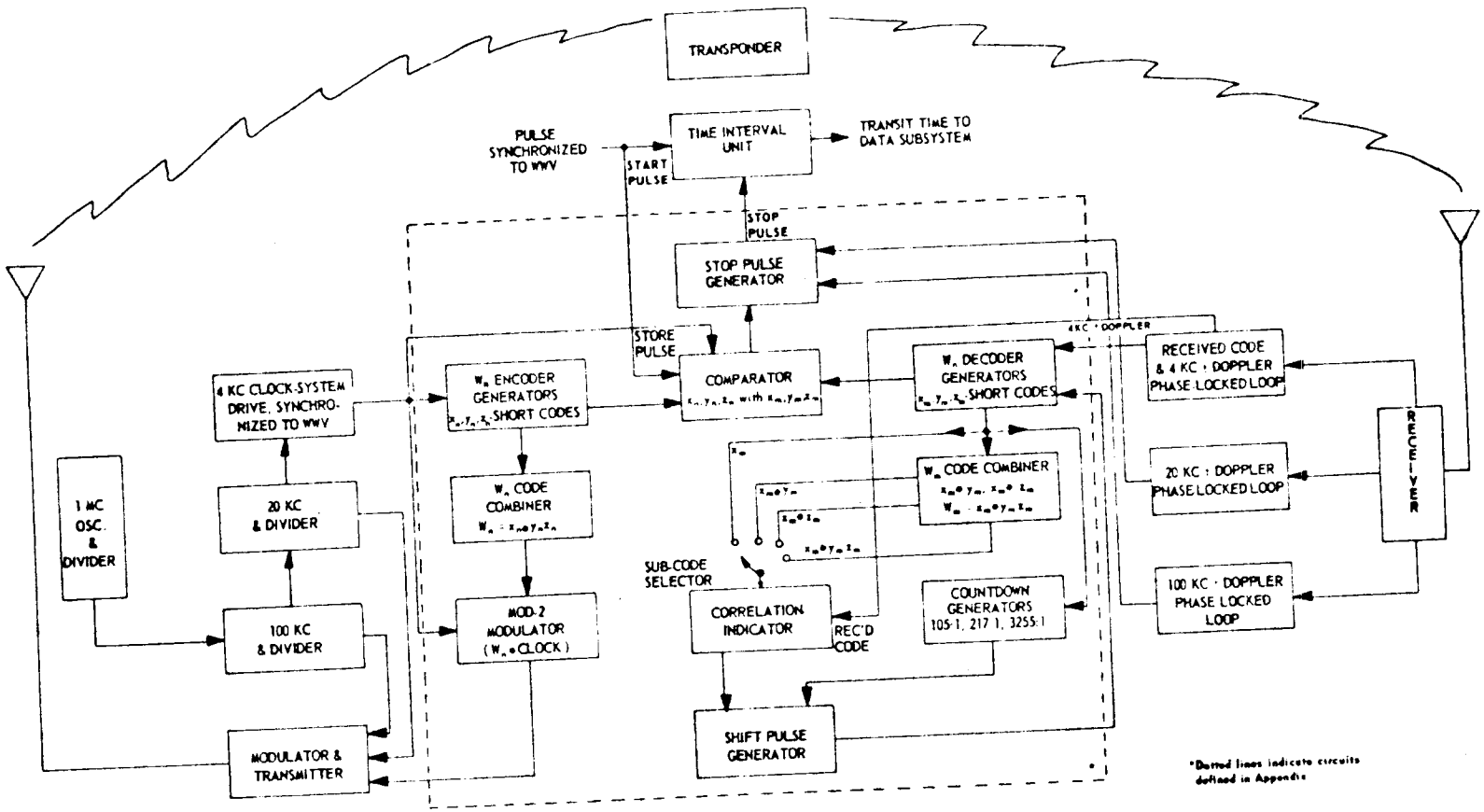

Figure 2. System Block Diagram

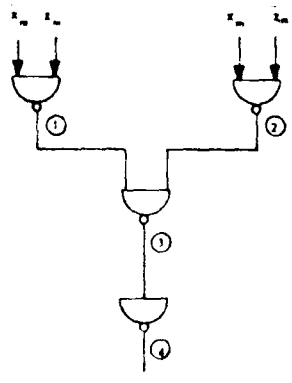

1. $x_m \bullet z_m$ SUB-CODE COMBINER

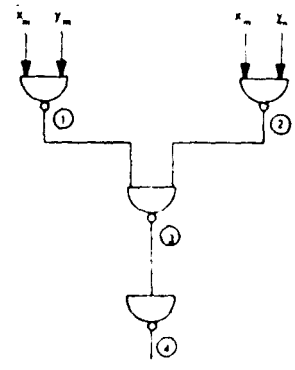

2. $x_m \bullet y_m$ SUB-CODE COMBINER

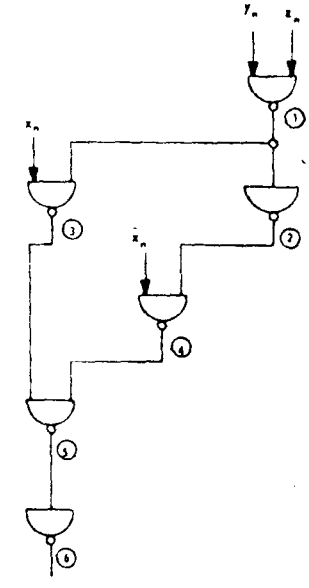

3. $x \bullet y \cdot z$ LONG CODE COMBINER SHOWN FOR ENCODER. (DUPLICATE DECODER DIAGRAM NOT SHOWN).

$x_m \bullet z_m$ SUB-CODE COMBINER

1.1. $F_{m(1)} = \overline{\bar{x}_m \cdot z_m}$

1.2. $F_{m(2)} = \overline{x_m \cdot \bar{z}_m}$

1.3. $F_{m(3)} = \overline{\overline{(\bar{x}_m \cdot z_m) \cdot (x_m \cdot \bar{z}_m)}}$

$= x_m \bullet z_m$

1.4. $F_{m(4)} = \overline{x_m \bullet z_m}$

$x_m \bullet y_m$ SUB-CODE COMBINER

2.1. $F_{m(1)} = \overline{\bar{x}_m \cdot y_m}$

2.2. $F_{m(2)} = \overline{x_m \cdot \bar{y}_m}$

2.3. $F_{m(3)} = \overline{\overline{(\bar{x}_m \cdot y_m) \cdot (x_m \cdot \bar{y}_m)}}$

$= x_m \bullet y_m$

2.4. $F_{m(4)} = \overline{x_m \bullet y_m}$

$x_n \bullet y_n z_n$ LONG CODE COMBINER

3.1. $F_{n(1)} = \overline{y_n \cdot z_n}$

3.2. $F_{n(2)}$ $y_n \cdot z_n$

3.3. $F_{n(3)} = \overline{x_n \cdot \overline{(y_n \cdot z_n)}}$

3.4. $F_{n(4)} = \overline{\bar{x}_n \cdot (y_n \cdot z_n)}$

3.5. $F_{n(5)} = \overline{\overline{[x_n \cdot \overline{(y_n \cdot z_n)}] \cdot [\bar{x}_n \cdot (y_n \cdot z_n)]}}$

$= x_n \bullet y_n \cdot z_n$

3.6. $F_{n(6)} = \overline{x_n \bullet y_n \cdot z_n}$

Legend: See Fig. 3
Letters n and m refer to encoder, decoder related functions, respectively.

Figure 4. W_m Sub-Code Combiners and W_n-W_m Code Combiner.

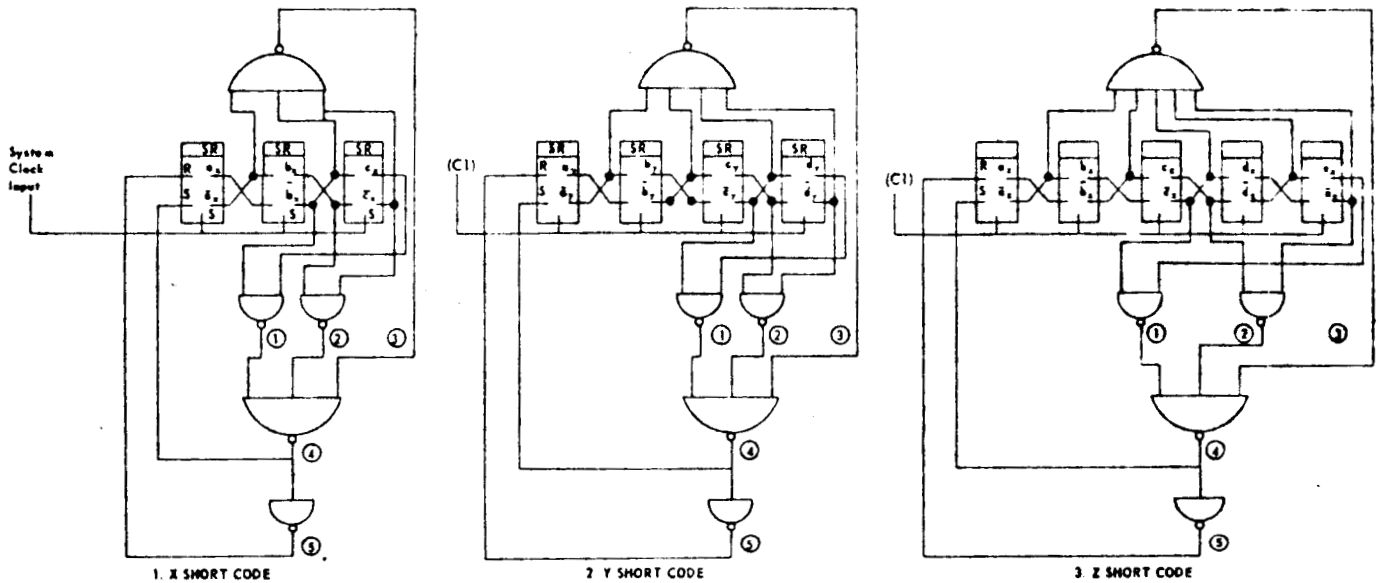

1. X-SHORT CODE

1.1. $F_{(1)} = \overline{\overline{b_x} \cdot c_x}$

1.2. $F_{(2)} = \overline{b_x \cdot \overline{c_x}}$

1.3. $F_{(3)} = \overline{\overline{a_x} \cdot \overline{b_x} \cdot \overline{c_x}}$

1.4. $F_{(4)} = F_{(x)}$

$$= \overline{\overline{(b_x \cdot c_x)} \cdot \overline{(b_x \cdot c_x)} \cdot \overline{a_x \cdot b_x \cdot c_x}}$$

$$= b_x \oplus c_x + \overline{a_x} \cdot \overline{b_x} \cdot \overline{c_x}$$

1.5. $F_{(5)} = \overline{b_x \oplus c_x + \overline{a_x} \cdot \overline{b_x} \cdot \overline{c_x}}$

2. Y-SHORT CODE

2.1. $F_{(1)} = \overline{\overline{c_y} \cdot d_y}$

2.2. $F_{(2)} = \overline{c_y \cdot \overline{d_y}}$

2.3. $F_{(3)} = \overline{\overline{a_y} \cdot \overline{b_y} \cdot \overline{c_y} \cdot \overline{d_y}}$

2.4. $F_{(4)} = F_{(y)}$

$$= \overline{\overline{(\overline{c_y} \cdot d_y)} \cdot \overline{(c_y \cdot \overline{d_y})} \cdot \overline{a_y \cdot b_y \cdot c_y \cdot d_y}}$$

$$= c_y \oplus d_y + \overline{a_y} \cdot \overline{b_y} \cdot \overline{c_y} \cdot \overline{d_y}$$

2.5. $F_{(5)} = \overline{c_y \oplus d_y + \overline{a_y} \cdot \overline{b_y} \cdot \overline{c_y} \cdot \overline{d_y}}$

3. Z-SHORT CODE

3.1. $F_{(1)} = \overline{\overline{c_z} \cdot \overline{e_z}}$

3.2. $F_{(2)} = \overline{\overline{c_z} \cdot e_z}$

3.3. $F_{(3)} = \overline{\overline{a_z} \cdot \overline{b_z} \cdot \overline{c_z} \cdot \overline{d_z} \cdot \overline{e_z}}$

3.4. $F_{(4)} = F_{(z)}$

$$= \overline{\overline{(\overline{c_z} \cdot \overline{e_z})} \cdot \overline{(\overline{c_z} \cdot e_z)} \cdot \overline{a_z \cdot b_z \cdot c_z \cdot d_z \cdot e_z}}$$

$$= c_z \oplus e_z + \overline{a_z} \cdot \overline{b_z} \cdot \overline{c_z} \cdot \overline{d_z} \cdot \overline{e_z}$$

3.5. $F_{(5)} = \overline{c_z \oplus e_z + \overline{a_z} \cdot \overline{b_z} \cdot \overline{c_z} \cdot \overline{d_z} \cdot \overline{e_z}}$

Legend: $F_{(1)}$, $F_{(2)}$, etc., refer to the existing functions at the related points designated by a circled number on the above logic diagram.

$F_{(x)}$, $F_{(y)}$, etc., refer to the functions which generate the encoding-decoding PN codes x, y, etc., respectively.

Letters a, b, etc., refer to particular shift register stages.

The subscripts in terms c_x, c_y, etc., refer to shift registers which are associated with codes x, y, etc., respectively.

Figure 3. Encoder - Decoder Generators

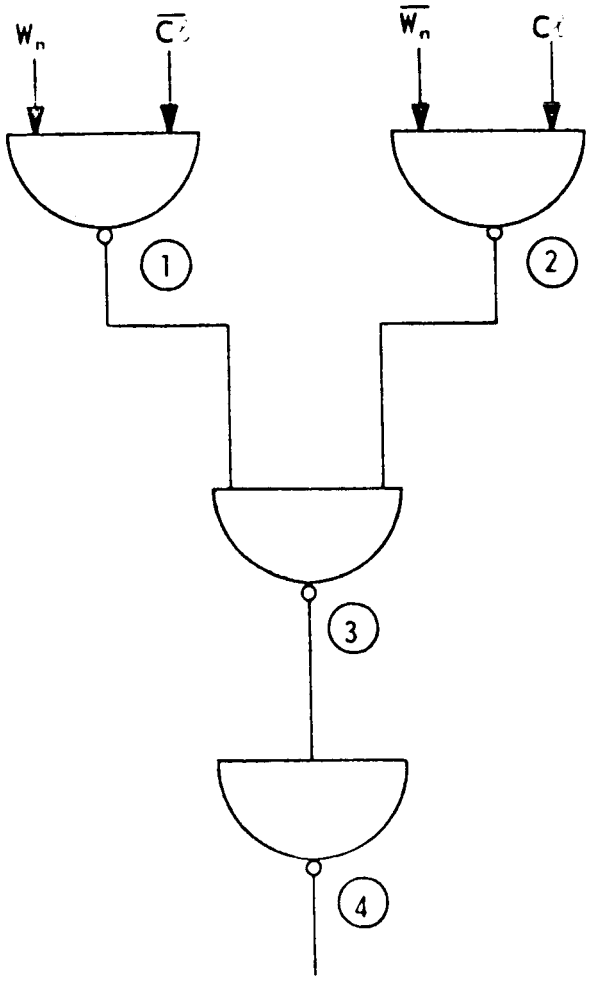

1. $F_{n(1)} = \overline{W_n \cdot \overline{C1}}$

2. $F_{n(2)} = \overline{\overline{W_n} \cdot C1}$

3. $F_{n(3)} = \overline{\overline{(W_n \cdot \overline{C1})} \cdot \overline{(\overline{W_n} \cdot C1)}}$

   $= W_n \oplus C1$

4. $F_{n(4)} = \overline{W_n \oplus C1}$

Legend: See Figures 3 and 4
C1 ≡ System clock input
W_n ≡ decoder long code

Figure 5. MOD-2 Modulator

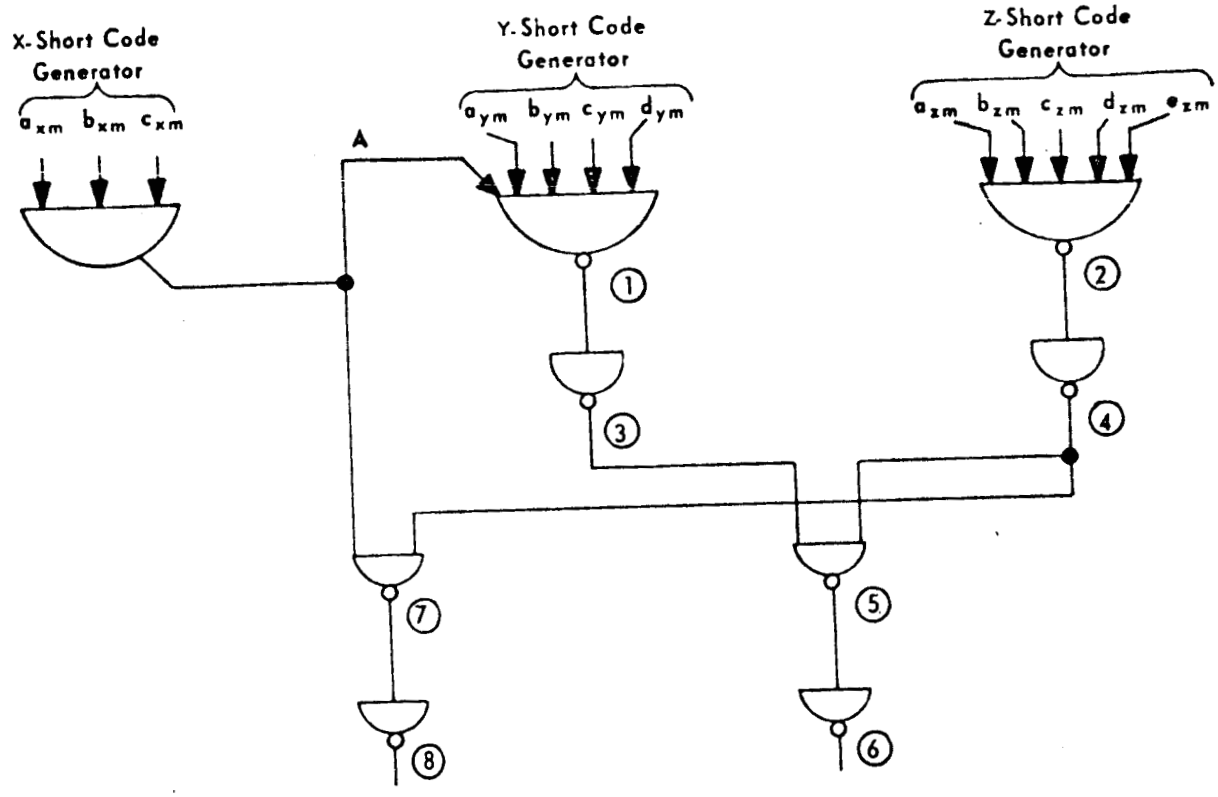

Let $A = a_{xm} \cdot b_{xm} \cdot c_{xm}$

$B = a_{ym} \cdot b_{ym} \cdot c_{ym} \cdot d_{ym}$

$C = a_{zm} \cdot b_{zm} \cdot c_{zm} \cdot d_{zm} \cdot e_{zm}$

1. $F_{m(1)} = \overline{A \cdot B}$
2. $F_{m(2)} = \overline{C}$
3. $F_{m(3)} = A \cdot B$ = Countdown of 105:1
4. $F_{m(4)} = C$
5. $F_{m(5)} = \overline{A \cdot B \cdot C}$
6. $F_{m(6)} = A \cdot B \cdot C$ = Countdown of 3255:1
7. $F_{m(7)} = \overline{A \cdot C}$
8. $F_{m(8)} = A \cdot C$ = Countdown of 217:1

Figure 6. Countdown Generators

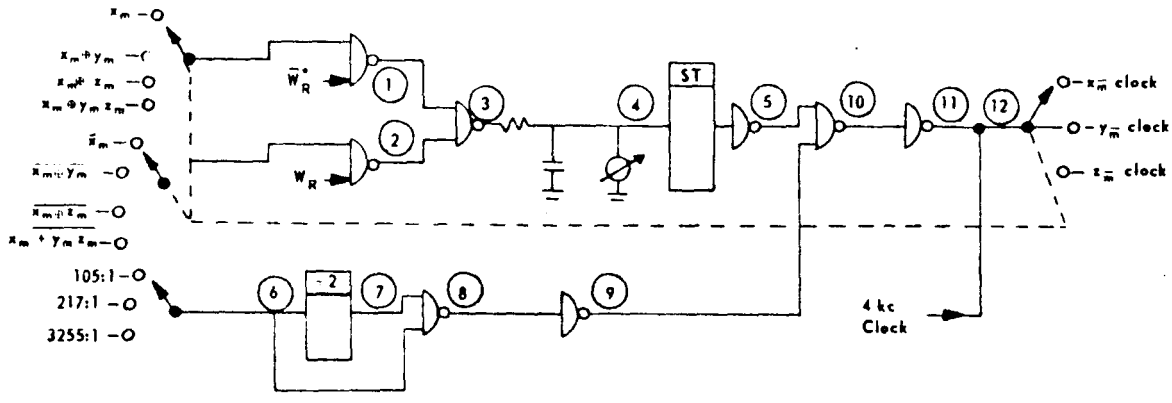

*Subscript R designates received code

1. $F_{R,m(1)} = \overline{\overline{W_R} \cdot W_m}$
2. $F_{R,m(2)} = \overline{W_R \cdot \overline{W_m}}$
3. $F_{R,m(3)} = \overline{\overline{(\overline{W_R} \cdot W_m)} \cdot \overline{(W_R \cdot \overline{W_m})}} = W_R \oplus W_m$
4. $F_{R,m(4)} = I$
5. $F_{R,m(5)} = \bar{I}$
6. $F_{m(6)} = CD$
7. $F_{m(7)} = CD_2$
8. $F_{m(8)} = \overline{CD_2 \cdot CD}$
9. $F_{m(9)} = CD_2 \cdot CD = CD_2$
10. $F_{R,m(10)} = \overline{CD_2 \cdot \bar{I}}$
11. $F_{R,m(11)} = CD_2 \cdot \bar{I}$
12. $F_{R,m(12)} = CD_2 \cdot \bar{I} + C1$

Legend: Subscript R refers to received code
I = Continuous correlation
CD = Countdown pulse
CD_2 = Countdown pulse, divided by two (used as extra shift pulses added to clock shift pulses)

Figure 7. Correlation Indicator and Shift Pulse Generator

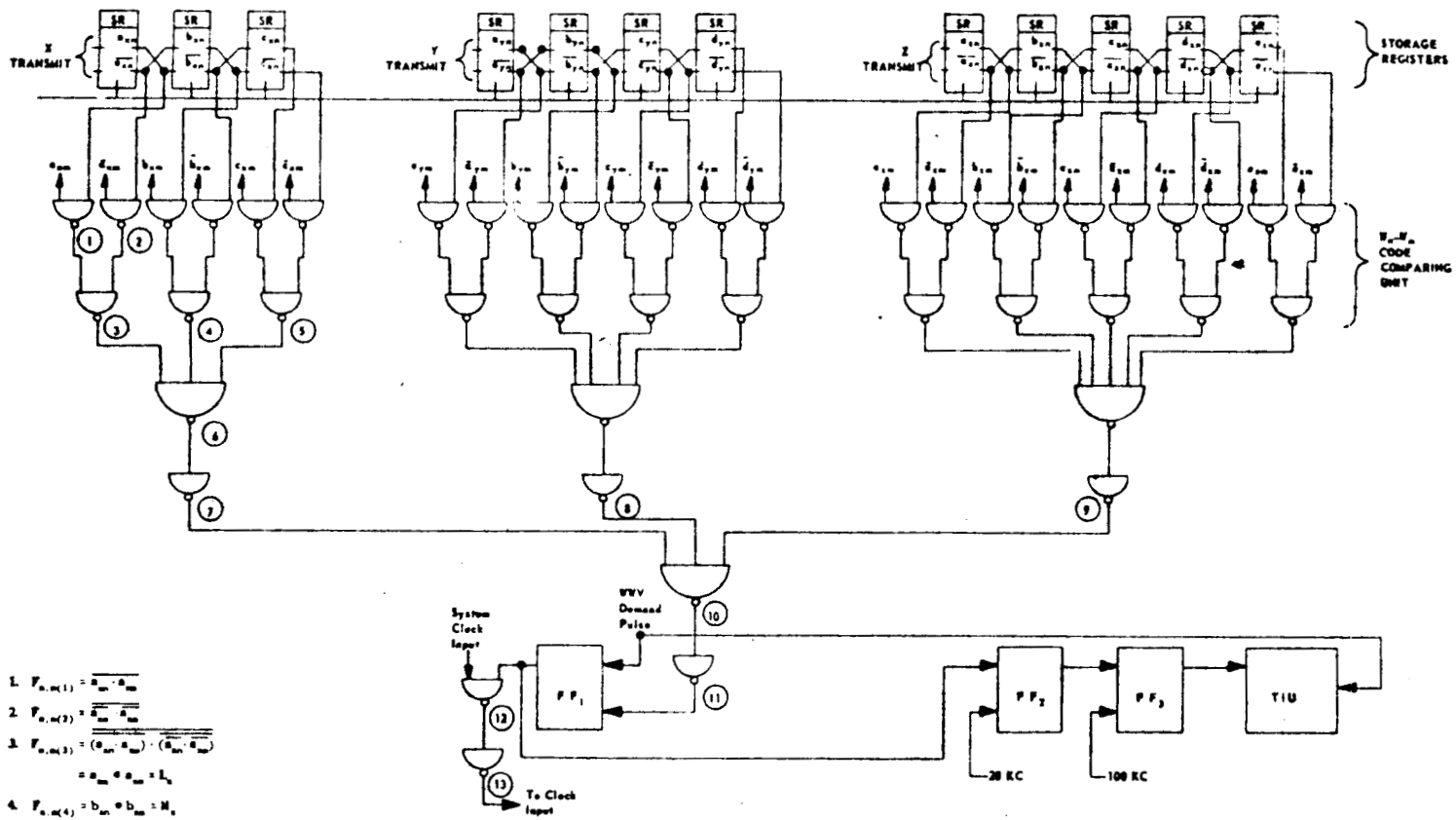

1. $F_{n,m(1)} = \overline{a_{sn} \cdot a_{sn}}$
2. $F_{n,m(2)} = \overline{\overline{a_{sn}}\ \overline{a_{sn}}}$
3. $F_{n,m(3)} = \overline{(a_{sn} \cdot a_{sn}) \cdot (\overline{a_{sn} \cdot a_{sn}})}$
   $= a_{sn} \oplus a_{sn} = L_n$
4. $F_{n,m(4)} = b_{sn} \oplus b_{sn} = M_n$
5. $F_{n,m(5)} = c_{sn} \oplus c_{sn} = N_n$
6. $F_{n,m(6)} = \overline{L_n \cdot M_n \cdot N_n}$
7. $F_{n,m(7)} = L_n \cdot M_n \cdot N_n = A_n$
8. $F_{n,m(8)} = L_y \cdot M_y \cdot N_y \cdot O_y = A_y$
9. $F_{n,m(9)} = L_z \cdot M_y \cdot N_y \cdot O_y \cdot P_y = A_z$
10. $F_{n,m(10)} = \overline{A_z \cdot A_y \cdot A_x}$
11. $F_{n,m(11)} = A_z \cdot A_y \cdot A_x$ = Reset Pulse
12. $F_{n,m(12)} = \overline{\overline{WWV} \cdot C1}$
13. $F_{n,m(13)} = \overline{\overline{WWV} \cdot C1}$

Legend: $\oplus$ = "inclusive and" (complement of exclusive -or)

Figure 8. Comparator and Stop Pulse Generator

TABLE 3

MOLAL THERMODYNAMIC FUNCTIONS FOR L-VALINE

$((CH_3)_2CH(NH_2)CHCOOH)$

SOLID PHASE

GRAM MOLECULAR WT. = 117.14892 GRAMS　　　　1 CAL = 4.1840 JOULES

T DEG K = 273.15 + T DEG C

T	C_P^C	$(H_T^O-H_O^C)$	$(H_T^O-H_O^C)/T$	S_T^O	$-(G_T^O-H_O^C)$	$-(G_T^O-H_O^C)/T$
DEG K	CAL/DEG	CAL	CAL/DEG	CAL/DEG	CAL	CAL/DEG
[illegible]	0.000	[illegible]	[illegible]	[illegible]	0.000	0.000
5.00	0.031	[illegible]	0.008	[illegible]	0.013	0.003
10.00	0.248	[illegible]	0.063	[illegible]	0.210	0.021
15.00	0.772	3.046	[illegible]	0.273	1.044	0.070
[illegible]	1.35	[illegible]	[illegible]	[illegible]	3.165	0.158
25.00	[illegible]	[illegible]	[illegible]	[illegible]	7.256	[illegible]
30.00	[illegible]	34.[illegible]	[illegible]	[illegible]	13.5[illegible]	0.45[illegible]
35.00	4.742	[illegible]	[illegible]	[illegible]	[illegible]	0.67[illegible]
40.00	[illegible]	81.[illegible]	[illegible]	[illegible]	[illegible]	0.914
[illegible]	6.34[illegible]	11[illegible]	[illegible]	[illegible]	[illegible]	1.184
[illegible]	[illegible]	15[illegible].41	[illegible]	[illegible]	[illegible]	1.476
[illegible]	[illegible]	[illegible]	[illegible]	[illegible]	[illegible]	1.7[illegible]
60.00	10.[illegible]	241.[illegible]	4.[illegible]	[illegible]	[illegible].00	2.117
65.00	11.[illegible]	294.[illegible]	4.[illegible]	[illegible]	[illegible]	2.45[illegible]
70.00	11.9[illegible]	352.[illegible]	[illegible]	[illegible]	[illegible]	[illegible]
[illegible]	[illegible]	41[illegible]	[illegible]	[illegible]	[illegible]	[illegible].177
[illegible]	[illegible]	43[illegible]	[illegible]	[illegible]	[illegible]	[illegible]
[illegible]	[illegible]	551.[illegible]	[illegible]	[illegible]	[illegible]	3.527
[illegible]	1[illegible].466	62[illegible]	[illegible]	[illegible]	[illegible]	4.312
[illegible]	[illegible]	70[illegible]	[illegible]	[illegible]	[illegible]	4.701
[illegible]	[illegible]	[illegible]	[illegible]	[illegible]	[illegible]	[illegible]
[illegible]	[illegible]	[illegible]	[illegible]	[illegible]	[illegible]	[illegible]
[illegible]	[illegible]	[illegible]	[illegible]	[illegible]	[illegible]	[illegible]
115.[illegible]	[illegible]	1061.[illegible]	[illegible]	[illegible]	[illegible]	6.2[illegible]
120.[illegible]	[illegible]	115[illegible]	[illegible].666	16.[illegible]	80[illegible].01	6.69[illegible]
[illegible]	[illegible].427	1261.4	[illegible]	17.1[illegible]	[illegible]	7.0[illegible]
[illegible]	[illegible]	136[illegible].2	[illegible]	[illegible]	[illegible]	7.4[illegible]
[illegible]	[illegible]	1474.[illegible]	[illegible]	[illegible]	[illegible]	[illegible]
[illegible]	[illegible]	[illegible]	[illegible]	[illegible]	[illegible]	[illegible]
145.[illegible]	[illegible]	1700.7	11.7[illegible]	[illegible]	[illegible]	[illegible].712
[illegible]	[illegible].541	1818.[illegible]	12.12[illegible]	[illegible]	[illegible]	[illegible].117
[illegible]	[illegible]	193[illegible].2	[illegible]	[illegible]	[illegible]	[illegible].521
[illegible]	[illegible]	206[illegible]	[illegible]	[illegible]	[illegible]	[illegible]
[illegible]	2[illegible].67[illegible]	218[illegible].8	13.2[illegible]	[illegible]	[illegible]	10.326
[illegible]	[illegible]	[illegible].7	13.64[illegible]	[illegible]	[illegible]	10.72[illegible]
[illegible]	[illegible]	24[illegible].7	14.01[illegible]	[illegible]	[illegible]	11.12
[illegible]	[illegible]	[illegible]	[illegible]	[illegible]	[illegible]	11.52[illegible]
[illegible]	[illegible]	2727.[illegible]	[illegible]	[illegible]	[illegible]	[illegible]
[illegible]	[illegible]	[illegible]	[illegible]	[illegible]	[illegible]	[illegible]
[illegible]	[illegible]	[illegible]	[illegible]	[illegible]	[illegible]	1[illegible].72[illegible]
[illegible]	[illegible]77	[illegible]	[illegible]	[illegible]	[illegible]	13.11[illegible]
[illegible]	30.11[illegible]	[illegible]	[illegible]	[illegible]	[illegible]	13.[illegible]12
[illegible]	[illegible]	[illegible].1	1[illegible].47[illegible]	[illegible]	[illegible]	[illegible]
[illegible]	[illegible]	[illegible]	[illegible]	[illegible]	[illegible]	14.297
[illegible]	[illegible].771	3772.3	17.147	[illegible]	[illegible]1.2	14.567
[illegible]	[illegible].316	3932.5	17.[illegible]7[illegible]	[illegible]	[illegible]	15.076
[illegible]	[illegible]	409[illegible].4	17.[illegible]	[illegible]	[illegible]	15.464
[illegible]	[illegible].37[illegible]	4261.[illegible]	[illegible]	[illegible]	[illegible]	[illegible]
[illegible]	[illegible]	[illegible]	[illegible]	[illegible]	[illegible]	[illegible]
[illegible]	[illegible].444	4600.1	[illegible]	[illegible]	[illegible]	16.619
[illegible]	[illegible]	477[illegible].7	[illegible]	36.[illegible]	425[illegible]	17.002
[illegible]	[illegible]	4950.0	1[illegible].412	[illegible]	4432.7	17.383
[illegible]	3[illegible].115	512[illegible].2	[illegible].728	[illegible]	461[illegible].4	17.763
[illegible]	[illegible]	5311.2	[illegible]	[illegible]	[illegible]07.6	18.142
[illegible]	[illegible]	54[illegible].0	[illegible]	[illegible]	5000.2	18.519
[illegible]	[illegible]	561[illegible]	[illegible]	[illegible]	[illegible]	18.757
[illegible]	[illegible].767	568[illegible].5	20.6[illegible]	39.[illegible]	5196.3	18.896
[illegible]	[illegible]	587[illegible].8	[illegible]	40.24[illegible]	[illegible].9	19.271
[illegible]	[illegible]	6066.9	[illegible]	[illegible]	[illegible]	19.645
[illegible]	[illegible]	6262.6	[illegible]	41.61[illegible]	[illegible]	20.018
[illegible]	[illegible]	6461.2	[illegible]	[illegible]	[illegible]	20.390
[illegible]	40.351	6567.7	[illegible]	[illegible]	6146.8	20.623
[illegible]	40.561	6662.6	[illegible]	[illegible]	[illegible]	20.760

H_O^C IS THE ENTHALPY OF THE SOLID AT 0 DEG K AND 1 ATM PRESSURE.

Hutchens, J. O., Cole, A. G. and Stout, J. W.,
Heat capacities from 11 to 305°K., entropies, and free energies of formation of l-valine, l-isoleucine, and l-leucine,
J. Phys. Chem. 67, 1128-1130 (1963).

TABLE 4

MOLAL THERMODYNAMIC FUNCTIONS FOR L-LEUCINE
$((CH_3)_2CHCH_2(NH_2)CHCOOH)$
SOLID PHASE

GRAM MOLECULAR WT. = 131.17601 GRAMS — 1 CAL = 4.1840 JOULES

T DEG K = 273.15 + T DEG C

T	C_P^C	$(H_T^O-H_O^C)$	$(H_T^O-H_O^C)/T$	S_T^O	$-(G_T^O-H_O^C)$	$-(G_T^O-H_O^C)/T$
DEG K	CAL/DEG	CAL	CAL/DEG	CAL/DEG	CAL	CAL/DEG
0.00	0.000	0.000	0.000	0.000	0.000	0.000
5.00	0.369	0.086	0.017	0.023	0.029	0.006
10.00	0.535	1.360	0.136	0.182	0.458	0.046
15.00	1.539	6.372	0.425	0.574	2.245	0.150
20.00	2.752	17.072	0.854	1.182	6.562	0.328
25.00	4.246	34.030	1.361	1.933	14.299	0.572
30.00	5.390	57.614	1.920	2.799	26.069	0.869
35.00	6.716	87.898	2.511	3.720	42.318	1.209
40.00	7.968	124.64	3.116	4.700	62.353	1.584
45.00	9.176	167.51	3.722	5.708	89.264	1.986
50.00	10.357	216.33	4.327	6.735	120.47	2.409
55.00	11.419	270.74	4.923	7.772	156.74	2.850
60.00	12.474	330.48	5.508	8.811	198.19	3.303
65.00	13.493	395.43	6.084	9.851	244.85	3.767
70.00	14.438	465.32	6.647	10.886	296.57	4.235
75.00	15.344	539.78	7.197	11.915	353.69	4.716
80.00	16.230	618.84	7.736	12.934	415.81	5.198
85.00	17.206	702.67	8.267	13.942	483.02	5.683
90.00	18.148	790.82	8.787	14.937	555.29	6.170
95.00	19.869	883.13	9.296	15.919	632.36	6.659
100.00	19.608	979.47	9.794	16.883	714.82	7.148
105.00	20.41	1079.6	10.282	17.830	801.98	7.638
110.00	21.167	1183.5	10.759	18.887	894.00	8.127
115.00	21.903	1291.2	11.226	19.844	990.82	8.616
120.00	22.618	1402.5	11.688	20.731	1092.4	9.104
125.00	23.323	1517.4	12.139	21.729	1198.7	9.590
130.00	24.019	1635.7	12.582	22.657	1309.7	10.075
135.00	24.684	1757.5	13.018	23.576	1425.3	10.558
140.00	25.356	1882.6	13.447	24.486	1545.4	11.039
145.00	26.020	2011.1	13.869	25.387	1670.1	11.518
150.00	26.676	2142.8	14.285	26.281	1799.3	11.995
155.00	27.319	2277.8	14.695	27.166	1932.9	12.470
160.00	27.960	2416.0	15.100	28.043	2070.9	12.943
165.00	28.608	2557.4	15.499	28.914	2213.3	13.414
170.00	29.261	2702.1	15.894	29.777	2360.1	13.883
175.00	29.919	2850.0	16.286	30.635	2511.1	14.349
180.00	30.544	3001.1	16.673	31.486	2666.4	14.813
185.00	31.160	3155.4	17.056	32.332	2826.0	15.275
190.00	31.767	3312.7	17.435	33.171	2989.7	15.735
195.00	32.378	3473.1	17.811	34.004	3157.7	16.193
200.00	33.003	3636.5	18.183	34.831	3329.7	16.649
205.00	33.646	3803.1	18.552	35.654	3506.0	17.102
210.00	34.296	3973.0	18.919	36.473	3686.3	17.554
215.00	34.957	4146.1	19.284	37.287	3870.7	18.003
220.00	35.608	4322.5	19.648	38.098	4059.1	18.451
225.00	36.273	4502.2	20.010	38.906	4251.7	18.896
230.00	36.943	4685.3	20.371	39.711	4448.2	19.340
235.00	37.623	4871.6	20.732	40.514	4648.8	19.782
240.00	38.401	5062.1	21.092	41.314	4853.3	20.222
245.00	39.127	5255.9	21.453	42.114	5061.9	20.661
250.00	39.858	5453.4	21.814	42.911	5274.5	21.098
255.00	40.608	5654.5	22.175	43.708	5491.0	21.533
260.00	41.365	5859.4	22.536	44.504	5711.5	21.967
265.00	42.137	6068.1	22.899	45.299	5936.0	22.400
270.00	42.943	6280.8	23.262	46.094	6164.5	22.832
275.00	43.467	6496.9	23.492	46.895	6397.0	23.263
280.00	44.216	6716.7	23.945	47.686	6633.4	23.691
285.00	45.577	6944.2	24.366	48.485	6873.9	24.119
290.00	46.556	7174.5	24.740	49.286	7118.3	24.546
295.00	47.527	7409.7	25.118	50.089	7366.7	24.972
298.15	48.145	7560.4	25.358	50.596	7525.3	25.240
300.00	48.506	7649.5	25.499	50.897	7619.2	25.397

H_O^C IS THE ENTHALPY OF THE SOLID AT 0 DEG K AND 1 ATM PRESSURE.

Hutchens, J. O., Cole, A. G. and Stout, J. W.,
Heat capacities from 11 to 305°K., entropies, and free energies of formation of l-valine, l-isoleucine, and l-leucine,
J. Phys. Chem. 67, 1128-1130 (1963).

TABLE 5

MOLAL THERMODYNAMIC FUNCTIONS FOR L-ISOLEUCINE
$((CH_3)(C_2H_5)CH(NH_2)CHCOOH)$
SOLID PHASE

GRAM MOLECULAR WT. = 131.17601 GRAMS — 1 CAL = 4.1840 JOULES
T DEG K = 273.15 + T DEG C

T	C_P^C	$(H_T^C-H_0^C)$	$(H_T^C-H_0^C)/T$	S_T^C	$-(G_T^C-H_0^C)$	$-(G_T^C-H_0^C)/T$
DEG K	CAL/DEG	CAL	CAL/DEG	CAL/DEG	CAL	CAL/DEG
0.00	0.000	0.000	0.000	0.000	0.000	0.000
5.00	0.085	0.109	0.022	0.029	0.037	0.007
10.00	0.597	1.592	0.159	0.215	0.557	0.056
15.00	1.513	6.7[illegible]	0.452	0.693	2.566	0.171
20.00	[illegible]	16.[illegible]	0.950	1.205	7.075	0.354
25.00	4.776	32.864	1.315	1.907	14.805	0.592
30.00	6.[illegible]	54.807	1.827	2.704	26.273	0.877
35.00	6.252	82.645	2.370	3.569	41.054	1.199
40.00	7.466	117.24	2.931	4.489	62.066	1.552
45.00	8.857	157.57	3.502	5.431	86.841	1.930
50.00	9.552	203.79	4.076	6.404	116.42	2.328
55.00	10.[illegible]	255.72	4.650	7.393	150.91	2.744
60.00	12.[illegible]	313.20	5.220	8.393	190.37	3.173
65.00	13.10	376.06	5.786	9.399	234.85	3.613
70.00	14.[illegible]	444.12	6.345	10.407	284.36	4.062
75.00	[illegible]	517.60	6.894	11.413	338.91	4.519
80.00	[illegible]	594.82	7.435	12.416	398.48	4.981
85.00	[illegible]	675.52	7.971	13.419	463.07	5.449
90.00	17.[illegible]	764.91	8.499	14.417	532.67	5.919
95.00	18.[illegible]	856.50	9.016	15.408	607.23	6.392
100.00	19.[illegible]	952.18	9.522	16.389	686.73	6.867
105.00	20.336	1051.8	10.018	17.362	771.11	7.344
110.00	21.[illegible]	1155.5	10.505	18.326	860.[illegible]	7.821
115.00	21.[illegible]	1261.1	10.983	19.282	954.36	8.299
120.00	22.[illegible]	1374.4	11.453	20.230	1053.1	8.776
125.00	23.[illegible]	1485.[illegible]	11.914	21.167	1156.6	9.253
130.00	24.[illegible]	1607.6	12.366	22.096	1264.8	9.729
135.00	25.[illegible]	1723.6	12.812	23.016	1377.6	10.204
140.00	26.[illegible]	1843.9	13.250	23.928	1494.9	10.678
145.00	27.[illegible]	1965.7	13.681	24.831	1616.8	11.151
150.00	28.[illegible]	2115.7	14.105	25.726	1743.2	11.622
155.00	29.[illegible]	2251.[illegible]	14.523	26.614	1874.1	12.091
160.00	30.[illegible]	2381.6	14.935	27.493	2009.4	12.559
165.00	29.661	2531.3	15.341	28.365	2149.0	13.024
170.00	2[illegible].285	2676.2	15.742	29.230	2293.0	13.488
175.00	2[illegible].[illegible]	2824.1	16.138	30.088	2441.[illegible]	13.950
180.00	32.[illegible]	2975.2	16.529	30.939	2593.9	14.410
185.00	33.167	3129.3	16.915	31.784	2750.7	14.869
190.00	33.713	3286.4	17.297	32.622	2911.7	15.325
195.00	34.275	3446.4	17.674	33.453	3076.9	15.779
200.00	34.[illegible]	3609.[illegible]	18.047	34.278	3246.2	16.231
205.00	35.[illegible]	3775.2	18.416	35.097	3419.7	16.681
210.00	36.[illegible]	3944.0	18.781	35.910	3597.2	17.129
215.00	34.512	4115.7	19.143	36.719	3778.8	17.576
220.00	35.257	4290.5	19.502	37.522	3964.4	18.020
225.00	35.[illegible]	4468.3	19.859	38.321	4154.0	18.462
230.00	36.477	4649.2	20.214	39.116	4347.6	18.902
235.00	37.[illegible]	4833.1	20.566	39.907	4545.1	19.341
240.00	37.715	5020.1	20.917	40.695	4746.6	19.778
245.00	38.335	5210.2	21.266	41.479	4952.1	20.213
250.00	38.952	5403.5	21.614	42.259	5161.4	20.646
255.00	39.565	5599.7	21.960	43.037	5374.7	21.077
260.00	40.176	5799.1	22.304	43.811	5591.8	21.507
265.00	40.780	6001.5	22.647	44.582	5812.8	21.935
270.00	41.400	6207.0	22.989	45.350	6037.6	22.361
273.15	41.802	6338.1	23.204	45.833	6181.2	22.629
275.00	42.035	6415.6	23.330	46.116	6266.3	22.786
280.00	42.669	6627.4	23.669	46.879	6498.7	23.210
285.00	43.313	6842.3	24.008	47.640	6735.0	23.632
290.00	43.967	7060.5	24.347	48.399	6975.1	24.052
295.00	44.630	7282.0	24.685	49.156	7219.0	24.471
298.15	45.050	7423.3	24.898	49.632	7374.6	24.735
300.00	45.296	7506.8	25.023	49.912	7466.7	24.889

H_0^C IS THE ENTHALPY OF THE SOLID AT 0 DEG K AND 1 ATM PRESSURE.

Hutchens, J. O., Cole, A. G. and Stout, J. W.,
Heat capacities from 11 to 305°K., entropies, and free energies of formation of l-valine, l-isoleucine, and l-leucine,
J. Phys. Chem. 67, 1128-1130 (1963).

TABLE 6

MOLAL THERMODYNAMIC FUNCTIONS FOR L-TYROSINE
$(HOC_6H_4CH_2(NH_2)CHCOOH)$
SOLID PHASE

GRAM MOLECULAR WT. = 181.19292 GRAMS — 1 CAL = 4.1840 JOULES

T DEG K = 273.15 + T DEG C

T	C_P^C	$(H_T^O-H_O^C)$	$(H_T^O-H_O^C)/T$	S_T^O	$-(G_T^O-H_O^C)$	$-(G_T^O-H_O^C)/T$
DEG K	CAL/DEG	CAL	CAL/DEG	CAL/DEG	CAL	CAL/DEG
0.00	0.000	0.000	0.000	0.000	0.000	0.000
5.00	0.035	0.044	0.009	0.012	0.015	0.003
10.00	0.279	0.697	0.070	0.093	0.232	0.023
15.00	0.913	3.503	0.234	0.312	1.175	0.078
20.00	1.854	10.336	0.517	0.699	3.634	0.182
25.00	3.003	22.386	0.895	1.232	8.402	0.336
30.00	4.323	40.655	1.355	1.894	16.166	0.539
35.00	5.712	65.734	1.878	2.664	27.523	0.786
40.00	7.079	97.732	2.443	3.517	42.948	1.074
45.00	8.413	136.47	3.033	4.428	62.789	1.395
50.00	9.705	181.80	3.636	5.382	87.299	1.746
55.00	10.880	233.30	4.242	6.363	116.65	2.121
60.00	12.017	290.55	4.842	7.358	150.95	2.516
65.00	13.107	353.39	5.437	8.364	190.25	2.927
70.00	14.120	421.49	6.021	9.373	234.59	3.351
75.00	15.112	494.57	6.594	10.381	283.98	3.786
80.00	16.093	572.59	7.157	11.387	338.40	4.230
85.00	17.065	655.50	7.712	12.392	397.85	4.681
90.00	17.959	743.09	8.257	13.393	462.31	5.137
95.00	18.766	834.92	8.789	14.386	531.77	5.598
100.00	19.561	930.74	9.307	15.369	606.16	6.062
105.00	20.391	1030.6	9.815	16.343	685.44	6.528
110.00	21.230	1134.7	10.315	17.311	769.58	6.996
115.00	22.058	1242.9	10.808	18.273	858.54	7.466
120.00	22.860	1355.2	11.293	19.229	952.30	7.936
125.00	23.630	1471.4	11.771	20.178	1050.8	8.407
130.00	24.419	1591.5	12.243	21.120	1154.1	8.877
135.00	25.259	1715.7	12.709	22.057	1262.0	9.348
140.00	26.041	1843.9	13.171	22.989	1374.6	9.819
145.00	26.815	1976.0	13.628	23.917	1491.9	10.289
150.00	27.593	2112.0	14.080	24.839	1613.8	10.759
155.00	28.391	2252.0	14.529	25.757	1740.3	11.228
160.00	29.204	2396.0	14.975	26.671	1871.4	11.696
165.00	30.021	2544.0	15.418	27.582	2007.0	12.164
170.00	30.834	2696.2	15.860	28.490	2147.2	12.630
175.00	31.638	2852.4	16.299	29.396	2291.9	13.096
180.00	32.431	3012.5	16.736	30.298	2441.1	13.562
185.00	33.222	3176.7	17.171	31.197	2594.9	14.026
190.00	34.017	3344.8	17.604	32.094	2753.1	14.490
195.00	34.818	3516.8	18.035	32.989	2915.8	14.953
200.00	35.626	3693.0	18.465	33.880	3083.0	15.415
205.00	36.440	3873.1	18.893	34.769	3254.6	15.876
210.00	37.261	4057.4	19.321	35.657	3430.7	16.336
215.00	38.085	4245.7	19.748	36.544	3611.2	16.796
220.00	38.904	4438.2	20.174	37.429	3796.1	17.255
225.00	39.713	4634.8	20.599	38.312	3985.4	17.713
230.00	40.512	4835.3	21.023	39.194	4179.2	18.170
235.00	41.307	5039.9	21.446	40.073	4377.4	18.627
240.00	42.107	5248.4	21.868	40.951	4579.9	19.083
245.00	42.918	5461.0	22.290	41.828	4786.9	19.538
250.00	43.741	5677.6	22.710	42.703	4998.2	19.993
255.00	44.575	5898.4	23.131	43.578	5213.9	20.447
260.00	45.416	6123.4	23.551	44.451	5434.0	20.900
265.00	46.258	6352.5	23.972	45.324	5658.4	21.353
270.00	47.098	6585.9	24.392	46.197	5887.2	21.805
273.15	47.624	6735.1	24.657	46.746	6033.6	22.089
275.00	47.932	6823.5	24.813	47.069	6120.4	22.256
280.00	48.762	7065.2	25.233	47.940	6357.9	22.707
285.00	49.591	7311.1	25.653	48.810	6599.8	23.157
290.00	50.423	7561.2	26.073	49.680	6846.0	23.607
295.00	51.257	7815.4	26.493	50.549	7096.6	24.056
298.15	51.782	7977.6	26.757	51.096	7256.7	24.339
300.00	52.088	8073.7	26.912	51.417	7351.5	24.505

H_O^C IS THE ENTHALPY OF THE SOLID AT 0 DEG K AND 1 ATM PRESSURE.

Huffman, H. M. and Ellis, E. L.,
Thermal data. VIII. The heat capacities, entropies and free energies of some amino acids,
J. Am. Chem. Soc. 59, 2150-2152 (1937).

Cole, A. G., Hutchens, J. O. and Stout, J. W.,
Heat capacities from 11 to 305°K. and entropies of l-phenylalanine, l-proline, l-tryptophane, and l-tryrosine. Some free energies of formation,
J. Phys. Chem. 67, 1852-1855 (1963).

TABLE 7

MOLAL THERMODYNAMIC FUNCTIONS FOR L-PHENYLALANINE
$(C_6H_5CH_2(NH_2)CHCOOH)$
SOLID PHASE

GRAM MOLECULAR WT. = 165.19352 GRAMS — 1 CAL = 4.1840 JOULES

T DEG K = 273.15 + T DEG C

T	C_P^C	$(H_T^O-H_O^C)$	$(H_T^O-H_O^C)/T$	S_T^O	$-(G_T^O-H_O^C)$	$-(G_T^O-H_O^C)/T$
DEG K	CAL/DEG	CAL	CAL/DEG	CAL/DEG	CAL	CAL/DEG
0.00	0.000	0.000	0.000	0.000	0.000	0.000
5.00	0.074	0.093	0.019	0.025	0.031	0.006
10.00	0.575	1.469	0.147	0.196	0.493	0.049
15.00	1.597	6.745	0.450	0.610	2.406	0.160
20.00	2.836	17.774	0.889	1.236	6.948	0.347
25.00	4.157	35.240	1.410	2.010	15.013	0.601
30.00	5.534	59.442	1.981	2.889	27.222	0.907
35.00	6.915	90.591	2.588	3.846	44.033	1.258
40.00	8.211	128.44	3.211	4.855	65.771	1.644
45.00	9.426	172.57	3.835	5.893	92.634	2.059
50.00	10.567	222.57	4.451	6.946	124.73	2.495
55.00	11.652	278.15	5.057	8.005	162.10	2.947
60.00	12.660	338.06	5.649	9.062	204.77	3.413
65.00	13.617	404.67	6.226	10.114	252.72	3.888
70.00	14.511	475.03	6.786	11.156	305.90	4.370
75.00	15.366	549.73	7.330	12.186	364.26	4.857
80.00	16.251	628.78	7.860	13.206	427.74	5.347
85.00	17.083	712.14	8.378	14.217	496.31	5.839
90.00	17.852	799.49	8.883	15.215	569.89	6.332
95.00	18.588	890.60	9.375	16.200	648.44	6.826
100.00	19.314	985.36	9.854	17.172	731.87	7.319
105.00	20.050	1083.8	10.322	18.132	820.14	7.811
110.00	20.778	1185.8	10.780	19.082	913.18	8.302
115.00	21.486	1291.5	11.231	20.021	1010.9	8.791
120.00	22.163	1400.7	11.672	20.950	1113.4	9.278
125.00	22.844	1513.2	12.105	21.869	1220.4	9.763
130.00	23.544	1629.1	12.532	22.778	1332.1	10.247
135.00	24.256	1748.6	12.953	23.680	1448.2	10.727
140.00	24.949	1871.7	13.369	24.575	1566.8	11.206
145.00	25.627	1998.1	13.780	25.462	1693.9	11.682
150.00	26.319	2128.0	14.186	26.343	1823.5	12.156
155.00	27.031	2261.3	14.589	27.217	1957.4	12.628
160.00	27.746	2398.3	14.989	28.087	2095.6	13.098
165.00	28.455	2538.8	15.387	28.952	2236.2	13.565
170.00	29.164	2682.8	15.781	29.812	2385.1	14.030
175.00	29.872	2830.4	16.174	30.667	2536.3	14.493
180.00	30.579	2981.6	16.564	31.519	2691.8	14.954
185.00	31.287	3136.2	16.953	32.366	2851.5	15.414
190.00	31.999	3294.4	17.339	33.210	3015.4	15.871
195.00	32.714	3456.2	17.724	34.050	3183.6	16.326
200.00	33.427	3621.6	18.108	34.888	3355.9	16.780
205.00	34.141	3790.5	18.490	35.722	3532.5	17.232
210.00	34.861	3963.0	18.871	36.553	3713.2	17.682
215.00	35.597	4139.1	19.252	37.382	3898.0	18.130
220.00	36.349	4319.0	19.632	38.209	4087.0	18.577
225.00	37.116	4502.6	20.012	39.034	4280.1	19.023
230.00	37.888	4690.1	20.392	39.859	4477.3	19.467
235.00	38.662	4881.5	20.772	40.682	4678.7	19.909
240.00	39.435	5076.8	21.153	41.504	4884.1	20.351
245.00	40.206	5275.9	21.534	42.325	5093.7	20.791
250.00	40.979	5478.8	21.915	43.145	5307.4	21.229
255.00	41.755	5685.7	22.297	43.964	5525.1	21.667
260.00	42.536	5896.4	22.678	44.782	5747.0	22.104
265.00	43.320	6111.0	23.060	45.600	5973.0	22.539
270.00	44.106	6329.6	23.443	46.417	6203.0	22.974
273.15	44.600	6469.3	23.684	46.931	6350.0	23.247
275.00	44.890	6552.1	23.826	47.234	6437.1	23.408
280.00	45.671	6778.5	24.209	48.049	6675.3	23.841
285.00	46.448	7008.8	24.592	48.865	6917.6	24.272
290.00	47.221	7242.9	24.976	49.679	7164.0	24.703
295.00	47.993	7481.0	25.359	50.493	7414.4	25.134
298.15	48.481	7632.9	25.601	51.005	7574.3	25.404
300.00	48.768	7722.9	25.743	51.306	7668.9	25.563

H_O^C IS THE ENTHALPY OF THE SOLID AT 0 DEG K AND 1 ATM PRESSURE.

Cole, A. G., Hutchens, J. O. and Stout, J. W.,
Heat capacities from 11 to 305°K. and entropies of l-phenylalanine, l-proline, l-tryptophane, and l-tyrosine. Some free energies of formation,
J. Phys. Chem. 67, 1852-1855 (1963).

TABLE 8

MOLAL THERMODYNAMIC FUNCTIONS FOR L-TRYPTOPHANE
($C_8H_6NCH_2(NH_2)CHCOOH$)
SOLID PHASE

GRAM MOLECULAR WT. = 204.23049 GRAMS — 1 CAL = 4.1840 JOULES
T DEG K = 273.15 + T DEG C

T	C_P^C	$(H_T^O-H_O^C)$	$(H_T^O-H_O^C)/T$	S_T^O	$-(G_T^O-H_O^C)$	$-(G_T^O-H_O^C)/T$
DEG K	CAL/DEG	CAL	CAL/DEG	CAL/DEG	CAL	CAL/DEG
0.00	0.000	0.000	0.000	0.000	0.000	0.000
5.00	0.116	0.144	0.029	0.038	0.048	0.010
10.00	0.896	2.293	0.229	0.306	0.770	0.077
15.00	2.393	10.371	0.691	0.941	3.740	0.249
20.00	3.947	26.248	1.312	1.843	10.622	0.531
25.00	5.495	49.850	1.994	2.890	22.410	0.896
30.00	6.995	81.102	2.703	4.026	39.673	1.322
35.00	8.434	119.72	3.420	5.213	62.755	1.793
40.00	9.742	165.21	4.130	6.426	91.849	2.296
45.00	10.991	217.04	4.823	7.646	127.03	2.823
50.00	12.200	275.06	5.501	8.867	168.31	3.366
55.00	13.310	338.86	6.161	10.083	215.69	3.922
60.00	14.402	408.14	6.802	11.288	269.12	4.485
65.00	15.459	482.82	7.428	12.483	328.55	5.055
70.00	16.429	562.57	8.037	13.664	393.93	5.628
75.00	17.390	647.12	8.628	14.831	465.17	6.202
80.00	18.383	736.55	9.207	15.985	542.21	6.778
85.00	19.328	830.85	9.775	17.128	625.00	7.353
90.00	20.212	929.72	10.330	18.258	713.47	7.927
95.00	21.092	1033.0	10.873	19.374	807.55	8.501
100.00	21.872	1140.7	11.407	20.478	907.19	9.072
105.00	22.838	1252.7	11.931	21.572	1012.3	9.641
110.00	23.674	1369.0	12.445	22.653	1122.9	10.208
115.00	24.514	1489.5	12.952	23.724	1238.8	10.772
120.00	25.341	1614.1	13.451	24.785	1360.1	11.334
125.00	26.169	1742.9	13.943	25.836	1486.7	11.893
130.00	27.025	1875.8	14.430	26.879	1618.5	12.450
135.00	27.898	2013.2	14.912	27.916	1755.5	13.003
140.00	28.763	2154.8	15.392	28.946	1897.6	13.554
145.00	29.606	2300.7	15.867	29.970	2044.9	14.103
150.00	30.444	2450.9	16.339	30.988	2197.3	14.649
155.00	31.296	2605.2	16.808	32.000	2354.8	15.192
160.00	32.159	2763.8	17.274	33.007	2517.3	15.733
165.00	33.019	2926.8	17.738	34.010	2684.8	16.272
170.00	33.871	3094.0	18.200	35.008	2857.4	16.808
175.00	34.721	3265.5	18.660	36.002	3034.9	17.342
180.00	35.576	3441.2	19.118	36.992	3217.4	17.874
185.00	36.442	3621.3	19.575	37.979	3404.8	18.404
190.00	37.316	3805.7	20.030	38.962	3597.2	18.933
195.00	38.191	3994.4	20.484	39.943	3794.4	19.459
200.00	39.065	4187.6	20.938	40.921	3996.6	19.983
205.00	39.942	4385.1	21.391	41.896	4203.6	20.506
210.00	40.825	4587.0	21.843	42.869	4415.6	21.026
215.00	41.713	4793.4	22.295	43.840	4632.3	21.546
220.00	42.600	5004.1	22.746	44.810	4854.0	22.063
225.00	43.489	5219.4	23.197	45.777	5080.4	22.580
230.00	44.383	5439.0	23.648	46.742	5311.7	23.094
235.00	45.287	5663.2	24.099	47.707	5547.9	23.608
240.00	46.200	5891.9	24.550	48.670	5788.8	24.120
245.00	47.120	6125.2	25.001	49.632	6034.5	24.631
250.00	48.042	6363.1	25.453	50.593	6285.1	25.140
255.00	48.964	6605.6	25.904	51.553	6540.5	25.649
260.00	49.884	6852.8	26.357	52.513	6800.6	26.156
265.00	50.800	7104.5	26.809	53.472	7065.6	26.663
270.00	51.712	7360.8	27.262	54.430	7335.4	27.168
273.15	52.285	7524.6	27.547	55.033	7507.8	27.486
275.00	52.623	7621.6	27.715	55.387	7609.9	27.672
280.00	53.540	7887.0	28.168	56.344	7889.2	28.176
285.00	54.468	8157.0	28.621	57.299	8173.3	28.678
290.00	55.409	8431.7	29.075	58.255	8462.2	29.180
295.00	56.360	8711.1	29.529	59.210	8755.9	29.681
298.15	56.958	8889.6	29.816	59.812	8943.3	29.996
300.00	57.307	8999.3	29.984	60.165	9054.3	30.181

H_O^C IS THE ENTHALPY OF THE SOLID AT 0 DEG K AND 1 ATM PRESSURE.

Cole, A. G., Hutchens, J. O. and Stout, J. W.,
Heat capacities from 11 to 305°K. and entropies of l-phenylalanine, l-proline, l-tryptophane, and l-tryrosine. Some free energies of formation, J. Phys. Chem. 67, 1852-1855 (1963).

TABLE 9

MOLAL THERMODYNAMIC FUNCTIONS FOR L-ASPARTIC ACID
($HOOCCH_2(NH_2)CHCOOH$)
SOLID PHASE

GRAM MOLECULAR WT. = 133.10469 GRAMS — 1 CAL = 4.1840 JOULES

T DEG K = 273.15 + T DEG C

T	C_P^C	$(H_T^O-H_0^C)$	$(H_T^O-H_0^C)/T$	S_T^O	$-(G_T^O-H_0^C)$	$-(G_T^O-H_0^C)/T$
DEG K	CAL/DEG	CAL	CAL/DEG	CAL/DEG	CAL	CAL/DEG
0.00	0.000	0.000	0.000	0.000	0.000	0.000
5.00	0.022	0.027	0.005	0.007	0.009	0.002
10.00	0.180	0.443	0.044	0.059	0.146	0.015
15.00	0.639	2.334	0.156	0.206	0.757	0.050
20.00	1.444	7.424	0.371	0.493	2.444	0.122
25.00	2.467	17.151	0.685	0.922	5.928	0.237
30.00	3.619	32.310	1.077	1.473	11.870	0.396
35.00	4.823	53.405	1.526	2.121	20.818	0.595
40.00	6.017	80.516	2.013	2.843	33.200	0.830
45.00	7.184	113.53	2.523	3.619	49.336	1.096
50.00	8.294	152.26	3.045	4.434	69.457	1.389
55.00	9.340	196.36	3.570	5.274	93.720	1.704
60.00	10.343	245.59	4.093	6.130	122.23	2.037
65.00	11.288	299.69	4.611	6.996	155.04	2.385
70.00	12.154	358.34	5.119	7.865	192.19	2.746
75.00	12.962	421.15	5.615	8.732	233.68	3.116
80.00	13.796	488.14	6.102	9.596	279.50	3.494
85.00	14.578	559.10	6.576	10.456	329.63	3.878
90.00	15.237	633.61	7.042	11.310	384.05	4.267
95.00	15.959	711.97	7.494	12.155	442.71	4.660
100.00	16.601	793.38	7.934	12.990	505.58	5.056
105.00	17.222	877.94	8.361	13.815	572.59	5.453
110.00	17.827	965.56	8.778	14.630	643.71	5.852
115.00	18.429	1056.2	9.185	15.436	718.87	6.251
120.00	19.011	1149.9	9.582	16.233	798.05	6.650
125.00	19.587	1246.5	9.970	17.020	881.18	7.049
130.00	20.129	1345.6	10.350	17.798	968.23	7.448
135.00	20.662	1447.6	10.723	18.568	1059.2	7.846
140.00	21.219	1552.3	11.088	19.330	1153.9	8.242
145.00	21.747	1659.6	11.447	20.084	1252.4	8.636
150.00	22.273	1769.8	11.799	20.830	1354.7	9.032
155.00	22.795	1882.5	12.145	21.569	1460.7	9.424
160.00	23.321	1997.8	12.486	22.301	1570.4	9.815
165.00	23.842	2115.7	12.822	23.027	1683.7	10.204
170.00	24.359	2236.2	13.154	23.746	1800.7	10.592
175.00	24.842	2359.2	13.481	24.459	1921.2	10.978
180.00	25.334	2484.6	13.804	25.166	2045.3	11.363
185.00	25.854	2612.6	14.122	25.867	2172.8	11.745
190.00	26.378	2743.2	14.438	26.564	2303.8	12.126
195.00	26.864	2876.4	14.751	27.256	2438.5	12.505
200.00	27.351	3012.3	15.060	27.942	2576.5	12.882
205.00	27.823	3149.9	15.366	28.624	2717.9	13.258
210.00	28.291	3290.2	15.668	29.300	2862.7	13.632
215.00	28.772	3432.9	15.967	29.971	3010.9	14.004
220.00	29.269	3578.0	16.263	30.638	3162.4	14.375
225.00	29.752	3725.5	16.558	31.301	3317.2	14.743
230.00	30.262	3875.5	16.850	31.961	3475.4	15.110
235.00	30.752	4026.2	17.141	32.617	3636.8	15.476
240.00	31.264	4183.2	17.430	33.270	3801.6	15.840
245.00	31.762	4340.8	17.718	33.920	3969.5	16.202
250.00	32.259	4500.9	18.003	34.566	4140.8	16.563
255.00	32.755	4663.4	18.288	35.210	4315.2	16.922
260.00	33.248	4828.4	18.571	35.851	4492.9	17.280
265.00	33.741	4995.9	18.852	36.489	4673.7	17.637
270.00	34.233	5165.8	19.133	37.124	4857.7	17.992
273.15	34.543	5274.1	19.309	37.523	4975.3	18.215
275.00	34.725	5338.2	19.412	37.757	5044.9	18.345
280.00	35.223	5513.1	19.690	38.387	5235.3	18.698
285.00	35.730	5690.4	19.966	39.015	5428.8	19.048
290.00	36.248	5870.4	20.243	39.641	5625.4	19.398
295.00	36.775	6052.9	20.518	40.265	5825.2	19.746
298.15	37.108	6169.3	20.692	40.657	5952.7	19.965
300.00	37.304	6238.1	20.794	40.887	6028.1	20.094

H_0^C IS THE ENTHALPY OF THE SOLID AT 0 DEG K AND 1 ATM PRESSURE.

Huffman, H. M. and Borsook, H.,
Thermal data. I. The heat capacities, entropies and free energies of seven organic compounds containing nitrogen,
J. Am. Chem. Soc. 54, 4297-4301 (1932).

Hutchens, J. O., Cole, A. G., Robie, R. A. and Stout, J. W.,
Heat capacities from 11 to 305°K, entropies and free energies of formation of l-asparagine monohydrate, l-aspartic acid, l-glutamic acid, and l-glutamine,
J. Biol. Chem. 238, 2407-2412 (1963).

TABLE 10

MOLAL THERMODYNAMIC FUNCTIONS FOR L-ASPARAGINE MONOHYDRATE
($NH_2COCH_2(NH_2)CHCOOH.H_2O$)
SOLID PHASE

GRAM MOLECULAR WT. = 150.13530 GRAMS — 1 CAL = 4.1840 JOULES
T DEG K = 273.15 + T DEG C

T	C_P^C	$(H_T^O-H_0^C)$	$(H_T^O-H_0^C)/T$	S_T^O	$-(G_T^O-H_0^C)$	$-(G_T^O-H_0^C)/T$
DEG K	CAL/DEG	CAL	CAL/DEG	CAL/DEG	CAL	CAL/DEG
0.00	0.000	0.000	0.000	0.000	0.000	0.000
5.00	0.020	0.025	0.005	0.007	0.008	0.002
10.00	0.164	0.409	0.041	0.054	0.135	0.014
15.00	0.562	2.093	0.140	0.186	0.692	0.046
20.00	1.264	6.580	0.329	0.439	2.197	0.110
25.00	2.279	15.362	0.615	0.826	5.507	0.212
30.00	3.487	29.745	0.991	1.346	10.692	0.356
35.00	4.800	50.573	1.445	1.987	18.985	0.542
40.00	6.256	78.331	1.958	2.727	30.732	0.768
45.00	7.878	113.17	2.515	3.546	46.383	1.031
50.00	9.572	154.07	3.101	4.427	66.203	1.326
55.00	10.400	203.77	3.705	5.355	90.332	1.650
60.00	11.652	259.03	4.317	6.315	119.88	1.998
65.00	12.846	320.59	4.933	7.302	153.93	2.368
70.00	14.021	388.32	5.547	8.304	192.94	2.756
75.00	15.179	461.51	6.153	9.313	235.98	3.160
80.00	16.265	540.13	6.752	10.328	286.08	3.576
85.00	17.312	624.10	7.342	11.345	340.26	4.003
90.00	18.287	713.13	7.924	12.363	399.53	4.439
95.00	19.155	806.82	8.493	13.376	463.88	4.883
100.00	20.056	904.93	9.049	14.382	533.28	5.333
105.00	20.927	1007.4	9.594	15.382	607.69	5.788
110.00	21.787	1114.2	10.129	16.375	687.09	6.246
115.00	22.628	1225.2	10.654	17.362	771.43	6.708
120.00	23.448	1340.4	11.170	18.343	860.70	7.172
125.00	24.255	1459.7	11.678	19.316	954.85	7.639
130.00	25.049	1583.0	12.177	20.283	1053.8	8.107
135.00	25.860	1710.3	12.669	21.244	1157.7	8.575
140.00	26.646	1841.6	13.154	22.199	1266.3	9.045
145.00	27.419	1976.7	13.633	23.147	1379.6	9.515
150.00	28.187	2115.7	14.105	24.090	1497.7	9.985
155.00	28.953	2258.6	14.572	25.027	1620.[illegible]	10.455
160.00	29.714	2405.3	15.033	25.956	1748.0	10.925
165.00	30.459	2555.7	15.489	26.884	1880.1	11.395
170.00	31.206	2710.0	15.941	27.805	2016.8	11.864
175.00	31.984	2868.0	16.388	28.721	2158.1	12.332
180.00	32.733	3029.8	16.832	29.632	2304.0	12.800
185.00	33.480	3195.3	17.272	30.539	2454.5	13.267
190.00	34.227	3364.5	17.708	31.442	2609.4	13.734
195.00	34.924	3537.4	18.140	32.340	2768.9	14.199
200.00	35.637	3713.8	18.569	33.233	2932.8	14.664
205.00	36.327	3893.8	18.994	34.122	3101.2	15.128
210.00	37.079	4077.4	19.416	35.007	3274.0	15.591
215.00	37.803	4264.5	19.835	35.888	3451.3	16.052
220.00	38.527	4455.4	20.252	36.765	3632.9	16.513
225.00	39.251	4649.9	20.666	37.639	3818.9	16.973
230.00	39.976	4847.9	21.078	38.510	4009.3	17.432
235.00	40.732	5049.6	21.488	39.377	4204.0	17.889
240.00	41.429	5254.0	21.896	40.242	4403.0	18.346
245.00	42.168	5463.9	22.302	41.103	4606.4	18.802
250.00	42.884	5676.5	22.706	41.962	4814.1	19.256
255.00	43.606	5892.7	23.109	42.819	5026.0	19.710
260.00	44.322	6112.5	23.510	43.672	5242.3	20.163
265.00	45.032	6336.0	23.909	44.523	5462.7	20.614
270.00	45.737	6562.9	24.307	45.372	5687.5	21.065
273.15	46.180	6707.6	24.557	45.905	5831.2	21.348
275.00	46.441	6793.3	24.703	46.217	5916.5	21.514
280.00	47.157	7027.3	25.097	47.061	6149.6	21.963
285.00	47.866	7264.8	25.491	47.901	6387.1	22.411
290.00	48.590	7506.0	25.883	48.740	6628.7	22.857
295.00	49.319	7750.7	26.274	49.577	6874.5	23.303
298.15	49.763	7906.8	26.519	50.103	7031.4	23.584
300.00	50.024	7999.1	26.664	50.412	7124.4	23.748

H_0^C IS THE ENTHALPY OF THE SOLID AT 0 DEG K AND 1 ATM PRESSURE.

Huffman, H. M. and Borsook, H.,
Thermal data. I. The heat capacities, entropies and free energies of seven organic compounds containing nitrogen,
J. Am. Chem. Soc. 54, 4297-4301 (1932).

Hutchens, J. O., Cole, A. G., Robie, R. A. and Stout, J. W.,
Heat capacities from 11 to 305°K, entropies and free energies of formation of l-asparagine monohydrate, l-aspartic acid, l-glutamic acid, and l-glutamine,
J. Biol. Chem. 238, 2407-2412 (1963).

TABLE 11

MOLAL THERMODYNAMIC FUNCTIONS FOR L-GLUTAMIC ACID
$(HOOC(CH_2)_2(NH_2)CHCOOH)$
SOLID PHASE

GRAM MOLECULAR WT. = 147.13178 GRAMS — 1 CAL = 4.1840 JOULES
T DEG K = 273.15 + T DEG C

T	C_P^C	$(H_T^O-H_O^C)$	$(H_T^O-H_O^C)/T$	S_T^O	$-(G_T^O-H_O^C)$	$-(G_T^O-H_O^C)/T$
DEG K	CAL/DEG	CAL	CAL/DEG	CAL/DEG	CAL	CAL/DEG
[illegible]	[illegible]	[illegible]	[illegible]	0.000	0.000	0.000
[illegible]	[illegible]	[illegible]	[illegible]	0.008	0.011	0.002
10.00	[illegible]	[illegible]	0.050	0.067	0.167	0.017
15.00	0.665	2.515	0.168	0.224	0.843	0.056
20.00	1.494	7.767	0.388	0.520	2.640	0.132
25.00	2.598	17.913	0.717	0.969	6.301	0.252
30.00	3.855	34.001	1.133	1.552	12.550	0.418
35.00	5.184	56.591	1.617	2.240	22.005	0.629
40.00	6.497	85.811	2.145	3.024	35.146	0.879
45.00	7.779	121.51	2.700	3.863	52.343	1.163
50.00	9.022	163.54	3.271	4.748	73.856	1.477
55.00	10.192	211.61	3.848	5.663	99.873	1.816
60.00	11.286	265.33	4.422	6.597	130.52	2.175
65.00	12.335	324.41	4.991	7.543	165.87	2.552
70.00	13.298	388.53	5.550	8.493	205.95	2.942
75.00	14.199	457.29	6.097	9.441	250.79	3.344
80.00	15.107	530.56	6.632	10.387	300.36	3.754
85.00	15.969	606.30	7.156	11.329	354.65	4.172
90.00	16.791	684.25	7.669	12.265	413.64	4.596
95.00	17.590	776.12	8.170	13.194	477.29	5.024
100.00	18.367	865.68	8.657	14.112	545.56	5.456
105.00	19.088	958.81	9.131	15.021	618.40	5.890
110.00	19.654	1055.5	9.596	15.921	695.76	6.325
115.00	20.170	1155.7	10.049	16.811	777.59	6.762
120.00	21.[illegible]	1259.1	10.493	17.692	863.85	7.199
125.00	21.643	1365.8	10.926	18.562	954.49	7.636
130.00	22.086	1475.6	11.351	19.423	1047.5	8.073
135.00	22.524	1588.6	11.766	20.277	1143.7	8.509
140.00	22.953	1704.8	12.177	21.121	1242.2	8.944
145.00	23.123	1823.9	12.579	21.957	1343.9	9.379
150.00	24.737	1946.0	12.973	22.785	1471.9	9.812
155.00	25.321	2071.1	13.362	23.606	1587.7	10.244
160.00	25.924	2199.2	13.745	24.419	1707.8	10.674
165.00	26.[illegible]17	2330.3	14.123	25.226	1831.9	11.103
170.00	27.[illegible]97	2464.4	14.496	26.026	1960.1	11.530
175.00	27.670	2601.3	14.864	26.820	2092.2	11.955
180.00	28.244	2741.1	15.228	27.607	2228.2	12.379
185.00	28.820	2883.7	15.588	28.389	2368.2	12.801
190.00	29.393	3029.3	15.944	29.165	2512.1	13.222
195.00	29.961	3177.7	16.296	29.936	2659.9	13.640
200.00	30.519	3328.9	16.644	30.702	2811.5	14.057
205.00	31.071	3482.9	16.990	31.462	2966.9	14.473
210.00	31.624	3639.7	17.332	32.216	3126.1	14.886
215.00	32.238	3799.4	17.672	32.970	3289.1	15.298
220.00	32.823	3962.1	18.008	33.718	3455.8	15.708
225.00	33.388	4127.6	18.345	34.462	3626.2	16.117
230.00	33.962	4296.0	18.678	35.202	3800.4	16.523
235.00	34.522	4467.2	19.010	35.938	3978.2	16.929
240.00	35.078	4641.2	19.338	36.671	4159.8	17.332
245.00	35.640	4818.0	19.665	37.400	4344.9	17.734
250.00	36.210	4997.6	19.991	38.126	4533.8	18.135
255.00	36.785	5180.1	20.314	38.848	4726.2	18.534
260.00	37.364	5365.5	20.637	39.568	4922.2	18.932
265.00	37.944	5553.8	20.958	40.285	5121.9	19.328
270.00	38.523	5744.9	21.278	41.000	5325.1	19.723
273.15	38.885	5866.9	21.479	41.449	5454.9	19.971
275.00	39.102	5939.0	21.596	41.712	5531.9	20.116
280.00	39.684	6136.0	21.914	42.422	5742.2	20.508
285.00	40.276	6335.9	22.231	43.130	5956.1	20.899
290.00	40.861	6538.7	22.547	43.835	6173.5	21.288
295.00	41.496	6744.7	22.863	44.539	6394.4	21.676
298.15	41.884	6876.0	23.062	44.982	6535.4	21.920
300.00	42.109	6953.7	23.179	45.242	6618.[illegible]	22.063

H_O^C IS THE ENTHALPY OF THE SOLID AT 0 DEG K AND 1 ATM PRESSURE.

Hutchens, J. O., Cole, A. G., Robie, R. A. and Stout, J. W.,
Heat capacities from 11 to 305°K, entropies and free energies of formation of l-asparagine monohydrate, l-aspartic acid, l-glutamic acid, and l-glutamine,
J. Biol. Chem. 238, 2407-2412 (1963).

TABLE 12

MOLAL THERMODYNAMIC FUNCTIONS FOR L-GLUTAMINE
($NH_2CO(CH_2)_2(NH_2)CHCOOH$)
SOLID PHASE

GRAM MOLECULAR WT. = 146.14705 GRAMS — 1 CAL = 4.1840 JOULES
T DEG K = 273.15 + T DEG C

T	C_P^C	$(H_T^O-H_0^C)$	$(H_T^O-H_0^C)/T$	S_T^O	$-(G_T^O-H_0^C)$	$-(G_T^O-H_0^C)/T$
DEG K	CAL/DEG	CAL	CAL/DEG	CAL/DEG	CAL	CAL/DEG
0.00	0.000	0.000	0.000	0.000	0.000	0.000
5.00	0.022	0.028	0.006	0.007	0.009	0.002
10.00	0.177	0.444	0.044	0.059	0.148	0.015
15.00	0.598	2.244	0.150	0.200	0.749	0.050
20.00	1.389	7.048	0.352	0.471	2.363	0.118
25.00	2.507	16.686	0.667	0.896	5.715	0.229
30.00	3.811	32.420	1.081	1.466	11.564	0.385
35.00	5.217	54.969	1.571	2.159	20.580	0.588
40.00	6.617	84.568	2.114	2.947	33.310	0.833
45.00	7.991	121.10	2.691	3.806	50.166	1.115
50.00	9.304	164.38	3.288	4.717	71.455	1.429
55.00	10.527	213.99	3.891	5.661	97.389	1.771
60.00	11.693	269.56	4.493	6.628	128.10	2.135
65.00	12.771	330.77	5.089	7.607	163.69	2.518
70.00	13.760	397.13	5.673	8.590	204.18	2.917
75.00	14.695	468.28	6.244	9.572	249.59	3.328
80.00	15.615	544.05	6.801	10.549	299.89	3.749
85.00	16.554	624.49	7.347	11.524	355.08	4.177
90.00	17.391	709.40	7.882	12.495	415.13	4.613
95.00	18.125	798.21	8.402	13.455	480.00	5.053
100.00	18.863	890.68	8.907	14.403	549.65	5.497
105.00	19.593	986.82	9.398	15.341	624.02	5.943
110.00	20.316	1086.6	9.878	16.270	703.05	6.391
115.00	21.031	1190.0	10.348	17.189	786.70	6.841
120.00	21.691	1296.8	10.807	18.098	874.92	7.291
125.00	22.323	1406.8	11.255	18.996	967.66	7.741
130.00	22.991	1520.1	11.693	19.884	1064.9	8.191
135.00	23.678	1636.8	12.124	20.765	1166.5	8.641
140.00	24.339	1756.8	12.549	21.638	1272.5	9.089
145.00	24.977	1880.1	12.966	22.503	1382.9	9.537
150.00	25.615	2006.6	13.377	23.361	1497.5	9.983
155.00	26.259	2136.3	13.783	24.211	1616.5	10.429
160.00	26.903	2269.2	14.182	25.055	1739.6	10.873
165.00	27.546	2405.3	14.578	25.893	1867.0	11.315
170.00	28.183	2544.6	14.969	26.725	1998.5	11.756
175.00	28.815	2687.1	15.355	27.551	2134.2	12.196
180.00	29.440	2832.8	15.738	28.371	2274.0	12.634
185.00	30.061	2981.5	16.116	29.186	2417.9	13.070
190.00	30.679	3133.4	16.491	29.996	2565.9	13.505
195.00	31.296	3288.3	16.863	30.801	2717.9	13.938
200.00	31.916	3446.4	17.232	31.601	2873.9	14.369
205.00	32.539	3607.5	17.597	32.397	3033.9	14.799
210.00	33.163	3771.7	17.961	33.189	3197.9	15.228
215.00	33.787	3939.1	18.321	33.976	3365.8	15.655
220.00	34.413	4109.6	18.680	34.760	3537.6	16.080
225.00	35.049	4283.3	19.037	35.541	3713.4	16.504
230.00	35.696	4460.1	19.392	36.318	3893.0	16.926
235.00	36.351	4640.2	19.746	37.093	4076.5	17.347
240.00	37.007	4823.6	20.098	37.865	4263.9	17.766
245.00	37.654	5010.3	20.450	38.635	4455.2	18.184
250.00	38.285	5200.1	20.801	39.402	4650.3	18.601
255.00	38.897	5393.1	21.149	40.166	4849.2	19.016
260.00	39.492	5589.1	21.497	40.927	5051.9	19.431
265.00	40.075	5788.0	21.842	41.685	5258.5	19.843
270.00	40.655	5989.8	22.185	42.439	5468.8	20.255
273.15	41.021	6118.5	22.400	42.913	5603.2	20.513
275.00	41.237	6194.6	22.526	43.191	5682.9	20.665
280.00	41.823	6402.2	22.865	43.939	5900.7	21.074
285.00	42.408	6612.8	23.203	44.684	6122.2	21.482
290.00	42.987	6826.3	23.539	45.427	6347.5	21.888
295.00	43.563	7042.7	23.873	46.167	6576.5	22.293
298.15	43.927	7180.4	24.083	46.631	6722.7	22.548
300.00	[illegible]	[illegible]	24.206	[illegible]	6809.2	22.697

H_0^C IS THE ENTHALPY OF THE SOLID AT 0 DEG K AND 1 ATM PRESSURE.

Hutchens, J. O., Cole, A. G., Robie, R. A. and Stout, J. W., Heat capacities from 11 to 305°K, entropies and free energies of formation of l-asparagine monohydrate, l-aspartic acid, l-glutamic acid, and l-glutamine, J. Biol. Chem. 238, 2407-2412 (1963).

TABLE 13

MOLAL THERMODYNAMIC FUNCTIONS FOR L-LYSINE HYDROCHLORIDE
$((NH_3Cl)(CH_2)_4(NH_2)CHCOOH)$
SOLID PHASE

GRAM MOLECULAR WT. = 182.65165 GRAMS — 1 CAL = 4.1840 JOULES

T DEG K = 273.15 + T DEG C

T	C_P^C	$(H_T^O-H_O^C)$	$(H_T^O-H_O^C)/T$	S_T^O	$-(G_T^O-H_O^C)$	$-(G_T^O-H_O^C)/T$
DEG K	CAL/DEG	CAL	CAL/DEG	CAL/DEG	CAL	CAL/DEG
0.00	0.000	0.000	0.000	0.000	0.000	0.000
5.00	0.062	0.077	0.015	0.021	0.026	0.005
10.00	0.499	1.248	0.125	0.166	0.415	0.041
15.00	1.552	6.139	0.409	0.549	2.089	0.139
20.00	2.934	17.290	0.864	1.181	6.322	0.316
25.00	4.496	35.782	1.431	1.999	14.202	0.568
30.00	6.191	62.472	2.082	2.968	26.565	0.886
35.00	7.913	97.742	2.793	4.052	44.074	1.259
40.00	9.584	141.51	3.538	5.216	67.221	1.681
45.00	11.209	193.50	4.300	6.441	96.550	2.141
50.00	12.838	253.62	5.072	7.706	131.70	2.634
55.00	14.394	321.76	5.850	9.004	173.47	3.154
60.00	15.840	397.38	6.623	10.319	221.77	3.696
65.00	17.257	480.18	7.387	11.644	276.68	4.257
70.00	18.549	569.75	8.139	12.971	338.22	4.832
75.00	19.785	665.59	8.875	14.293	406.38	5.418
80.00	21.043	767.66	9.596	15.610	481.14	6.014
85.00	22.237	875.98	10.306	16.923	562.47	6.617
90.00	23.351	990.19	11.002	18.228	650.35	7.226
95.00	24.394	1109.6	11.680	19.520	744.73	7.839
100.00	25.401	1234.1	12.341	20.797	845.53	8.455
105.00	26.359	1363.6	12.987	22.060	952.67	9.073
110.00	27.375	1498.1	13.619	23.311	1066.1	9.692
115.00	28.314	1637.3	14.238	24.548	1185.8	10.311
120.00	29.213	1781.1	14.843	25.773	1311.6	10.930
125.00	30.077	1929.4	15.435	26.983	1442.5	11.548
130.00	30.928	2081.9	16.015	28.179	1581.4	12.164
135.00	31.771	2238.7	16.583	29.362	1726.2	12.779
140.00	32.591	2397.6	17.140	30.532	1875.0	13.393
145.00	33.352	2564.0	17.686	31.690	2030.5	14.004
150.00	34.150	2731.9	18.223	32.835	2191.9	14.612
155.00	34.906	2906.3	18.750	33.965	2358.3	15.219
160.00	35.730	3083.0	19.269	35.091	2531.5	15.822
165.00	36.462	3263.6	19.779	36.202	2709.8	16.423
170.00	37.250	3448.0	20.282	37.303	2893.5	17.021
175.00	38.002	3636.1	20.778	38.394	3082.8	17.616
180.00	38.742	3828.0	21.266	39.475	3277.4	18.208
185.00	39.469	4023.5	21.749	40.546	3477.5	18.797
190.00	40.192	4222.6	22.224	41.608	3682.9	19.384
195.00	40.911	4425.4	22.694	42.661	3893.6	19.967
200.00	41.635	4631.8	23.159	43.706	4109.5	20.547
205.00	42.367	4841.8	23.616	44.743	4330.6	21.125
210.00	43.103	5055.4	24.074	45.773	4556.9	21.700
215.00	43.843	5272.8	24.525	46.796	4788.3	22.271
220.00	44.585	5493.9	24.972	47.812	5024.9	22.840
225.00	45.331	5718.7	25.416	48.823	5266.5	23.406
230.00	46.085	5947.2	25.857	49.827	5513.1	23.970
235.00	46.852	6179.5	26.296	50.827	5764.7	24.531
240.00	47.635	6415.7	26.732	51.821	6021.3	25.089
245.00	48.429	6655.9	27.167	52.812	6282.9	25.645
250.00	49.226	6900.0	27.600	53.798	6549.4	26.198
255.00	50.019	7148.2	28.032	54.781	6820.9	26.749
260.00	50.804	7400.2	28.462	55.759	7097.2	27.297
265.00	51.586	7656.2	28.891	56.735	7378.5	27.843
270.00	52.371	7916.1	29.319	57.706	7664.6	28.387
273.15	52.870	8081.8	29.588	58.317	7847.3	28.729
275.00	53.166	8179.9	29.745	58.674	7955.5	28.929
280.00	53.961	8447.8	30.171	59.640	8251.3	29.469
285.00	54.773	8719.8	30.596	60.602	8551.9	30.007
290.00	55.593	8996.1	31.021	61.563	8857.3	30.543
295.00	56.586	9276.7	31.447	62.523	9167.6	31.076
298.15	57.155	9455.9	31.715	63.127	9365.5	31.412
300.00	57.488	9561.9	31.873	63.482	9482.6	31.609

H_O^C IS THE ENTHALPY OF THE SOLID AT 0 DEG K AND 1 ATM PRESSURE.

Cole, A. G., Hutchens, J. O. and Stout, J. W.,
Heat capacities from 11 to 305°K. and entropies of l-arginine.HCl,
l-histidine.HCl, and l-lysine.HCl,
J. Phys. Chem. 67, 2245-2247 (1963).

TABLE 14

MOLAL THERMODYNAMIC FUNCTIONS FOR L-ARGININE HYDROCHLORIDE
$(NH_2C(=NH_2Cl)NH(CH_2)_3(NH_2)CHCOOH)$
SOLID PHASE

GRAM MOLECULAR WT. = 210.66505 GRAMS — 1 CAL = 4.1840 JOULES

T DEG K = 273.15 + T DEG C

T	C_P^C	$(H_T^O-H_0^C)$	$(H_T^O-H_0^C)/T$	S_T^O	$-(G_T^O-H_0^C)$	$-(G_T^O-H_0^C)/T$
DEG K	CAL/DEG	CAL	CAL/DEG	CAL/DEG	CAL	CAL/DEG
0.00	0.000	0.000	0.000	0.000	0.000	0.000
5.00	0.067	0.084	0.017	0.022	0.028	0.006
10.00	0.520	1.321	0.132	0.176	0.444	0.044
15.00	1.343	6.265	0.418	0.563	2.187	0.146
20.00	2.954	17.345	0.867	1.191	6.484	0.324
25.00	4.594	36.060	1.442	2.020	14.434	0.577
30.00	6.456	63.587	2.120	3.018	26.966	0.899
35.00	8.320	100.50	2.872	4.154	44.846	1.281
40.00	10.245	147.05	3.676	5.393	68.677	1.717
45.00	12.158	202.04	4.490	6.708	98.002	2.178
50.00	13.899	268.01	5.360	8.077	135.84	2.717
55.00	15.[illegible]	341.60	6.210	9.482	179.73	3.268
60.00	17.214	423.86	7.064	10.909	230.70	3.845
65.00	18.757	513.83	7.905	12.349	286.85	4.444
70.00	20.179	611.25	8.732	13.792	354.20	5.060
75.00	21.451	715.42	9.539	15.229	426.76	5.690
80.00	22.7[illegible]	826.13	10.327	16.656	506.48	6.331
85.00	24.132	943.41	11.095	18.075	593.32	6.980
90.00	25.[illegible]	1066.9	11.854	19.430	687.25	7.636
95.00	26.294	1196.0	12.589	20.836	788.20	8.297
100.00	27.336	1330.4	13.304	22.264	896.08	8.961
105.00	28.426	1469.9	13.999	23.626	1010.8	9.627
110.00	29.466	1614.7	14.679	24.973	1132.3	10.294
115.00	30.456	1764.5	15.344	26.305	1260.5	10.961
120.00	31.411	1919.2	15.993	27.621	1395.3	11.628
125.00	32.[illegible]	2076.6	16.629	28.923	1536.7	12.294
130.00	33.[illegible]	2236.8	17.252	30.210	1684.5	12.958
135.00	34.[illegible]	2411.7	17.864	31.485	1838.8	13.621
140.00	35.174	2583.3	18.466	32.747	1999.4	14.281
145.00	36.[illegible]	2762.4	19.058	33.998	2166.2	14.940
150.00	37.[illegible]	2946.0	19.640	35.236	2339.3	15.596
155.00	38.[illegible]	3133.0	20.213	36.462	2518.5	16.249
160.00	39.791	3324.4	20.778	37.677	2703.9	16.900
165.00	40.[illegible]	3520.3	21.335	38.883	2895.5	17.547
170.00	40.435	3720.6	21.886	40.079	3092.7	18.193
175.00	41.368	3925.3	22.430	41.265	3296.1	18.835
180.00	42.324	4134.3	22.968	42.442	3505.4	19.474
185.00	43.272	4347.5	23.500	43.611	3720.5	20.111
190.00	43.923	4565.0	24.026	44.771	3941.5	20.745
195.00	44.779	4786.7	24.547	45.923	4168.2	21.375
200.00	45.624	5012.7	25.064	47.067	4400.7	22.003
205.00	46.463	5242.0	25.575	48.204	4638.9	22.629
210.00	47.314	5477.4	26.083	49.334	4882.7	23.251
215.00	48.161	5715.1	26.587	50.457	5132.2	23.871
220.00	49.[illegible]	5959.0	27.087	51.574	5387.3	24.488
225.00	49.867	6206.2	27.583	52.685	5647.9	25.102
230.00	50.71[illegible]	6459.7	28.077	53.791	5914.1	25.714
235.00	51.[illegible]	6713.4	28.568	54.890	6185.8	26.323
240.00	52.419	6973.4	29.056	55.985	6463.0	26.929
245.00	53.261	7237.6	29.541	57.074	6745.7	27.533
250.00	54.117	7506.0	30.024	58.159	7032.8	28.135
255.00	54.993	7778.7	30.505	59.239	7327.2	28.734
260.00	55.887	8055.8	30.984	60.315	7626.1	29.331
265.00	56.7[illegible]	8337.3	31.462	61.388	7930.4	29.926
270.00	57.4[illegible]	8623.2	31.938	62.456	8240.0	30.519
275.00	58.1[illegible]	8909.5	32.237	63.128	8437.8	30.891
278.15	58.[illegible]	8913.4	32.412	63.521	8555.0	31.109
280.00	59.328	9207.8	32.885	64.582	8875.2	31.697
285.00	60.176	9506.6	33.357	65.640	9200.8	32.283
290.00	61.[illegible]	9809.8	33.826	66.694	9531.6	32.868
295.00	61.[illegible]	10117.	34.294	67.744	9867.7	33.450
298.15	62.[illegible]	10313.	34.588	68.404	10082.	33.816
300.00	63.7[illegible]	10428.	34.761	68.791	10204.	34.030

H_0^C IS THE ENTHALPY OF THE SOLID AT 0 DEG K AND 1 ATM PRESSURE.

Cole, A. G., Hutchens, J. O. and Stout, J. W.,
Heat capacities from 11 to 305°K. and entropies of l-arginine.HCl,
l-histidine.HCl, and l-lysine.HCl,
J. Phys. Chem. 67, 2245-2247 (1963).

TABLE 15

MOLAL THERMODYNAMIC FUNCTIONS FOR L-HISTIDINE HYDROCHLORIDE
$(C_3H_3N_2(HCl)CH_2(NH_2)CHCOOH)$
SOLID PHASE

GRAM MOLECULAR WT. = 191.61850 GRAMS — 1 CAL = 4.1840 JOULES

T DEG K = 273.15 + T DEG C

T	C_P^C	$(H_T^O-H_O^C)$	$(H_T^O-H_O^C)/T$	S_T^O	$-(G_T^O-H_O^C)$	$-(G_T^O-H_O^C)/T$
DEG K	CAL/DEG	CAL	CAL/DEG	CAL/DEG	CAL	CAL/DEG
0.00	0.000	0.000	0.000	0.000	0.000	0.000
5.00	0.052	0.066	0.013	0.017	0.022	0.004
10.00	0.417	1.046	0.105	0.139	0.349	0.035
15.00	1.350	5.214	0.348	0.465	1.757	0.117
20.00	2.853	15.584	0.779	1.051	5.438	0.272
25.00	4.602	34.140	1.366	1.872	12.660	0.506
30.00	6.526	61.913	2.064	2.879	24.468	0.816
35.00	8.464	98.409	2.840	4.032	41.695	1.191
40.00	10.347	140.45	3.562	5.283	64.552	1.624
45.00	12.163	202.76	4.506	6.610	94.666	2.104
50.00	13.891	267.55	5.359	7.982	131.13	2.623
55.00	15.49[illegible]	341.45	6.208	9.381	174.53	3.173
60.00	17.016	422.74	7.046	10.795	224.97	3.749
65.00	18.457	511.47	7.869	12.215	282.49	4.346
70.00	19.773	607.11	8.673	13.632	347.11	4.959
75.00	21.[illegible]	706.14	9.455	15.038	418.79	5.584
80.00	22.2[illegible]7	817.34	10.217	16.435	497.48	6.218
85.00	23.404	931.67	10.961	17.821	583.13	6.860
90.00	24.566	1051.8	11.687	19.194	675.67	7.507
95.00	25.563	1177.1	12.391	20.549	775.04	8.158
100.00	26.530	1307.4	13.074	21.885	881.13	8.811
105.00	27.490	1442.4	13.737	23.203	993.86	9.465
110.00	28.445	1582.3	14.384	24.504	1113.1	10.119
115.00	29.3[illegible]	1726.8	15.015	25.788	1238.9	10.773
120.00	30.234	1875.8	15.632	27.056	1371.0	11.425
125.00	31.112	2024.2	16.233	28.309	1509.4	12.075
130.00	31.998	2186.9	16.823	29.546	1654.0	12.723
135.00	32.868	2349.1	17.401	30.770	1804.8	13.369
140.00	33.712	2515.6	17.968	31.981	1961.7	14.012
145.00	34.522	2686.1	18.525	33.178	2124.6	14.653
150.00	35.344	2862.3	19.072	34.362	2293.5	15.290
155.00	36.170	3039.6	19.610	35.534	2468.2	15.924
160.00	36.997	3222.5	20.140	36.693	2646.8	16.555
165.00	37.830	3407.5	20.664	37.847	2835.2	17.183
170.00	38.663	3600.6	21.181	38.988	3027.3	17.807
175.00	39.478	3796.1	21.692	40.121	3225.0	18.429
180.00	40.272	3995.3	22.197	41.244	3428.4	19.047
185.00	41.036	4198.8	22.696	42.358	3637.6	19.662
190.00	41.849	4406.1	23.190	43.464	3852.0	20.274
195.00	42.656	4617.4	23.679	44.561	4072.1	20.882
200.00	43.473	4832.7	24.163	45.651	4297.6	21.488
205.00	44.293	5052.1	24.644	46.735	4528.6	22.091
210.00	45.112	5275.6	25.122	47.812	4765.0	22.690
215.00	45.924	5503.2	25.596	48.883	5006.7	23.287
220.00	46.726	5734.8	26.067	49.946	5253.8	23.881
225.00	47.517	5970.4	26.535	51.007	5506.2	24.472
230.00	48.301	6210.0	27.000	52.060	5763.8	25.060
235.00	49.089	6453.5	27.462	53.107	6026.8	25.646
240.00	49.891	6700.9	27.920	54.149	6294.9	26.229
245.00	50.713	6952.4	28.377	55.186	6568.2	26.809
250.00	51.558	7208.1	28.832	56.219	6846.8	27.387
255.00	52.417	7468.0	29.286	57.249	7130.4	27.962
260.00	53.277	7732.2	29.739	58.275	7419.2	28.536
265.00	54.127	8000.8	30.192	59.298	7713.2	29.106
270.00	54.961	8273.5	30.643	60.317	8012.2	29.675
272.15	55.478	8447.4	30.926	60.958	8203.2	30.032
275.00	55.780	8550.3	31.092	61.333	8316.3	30.241
280.00	56.591	8831.3	31.540	62.346	8625.5	30.805
285.00	57.399	9116.2	31.987	63.355	8939.8	31.368
290.00	58.210	9405.3	32.432	64.360	9254.1	31.928
295.00	59.028	9698.4	32.876	65.362	9583.4	32.486
298.15	59.547	9885.1	33.155	65.992	9790.3	32.837
300.00	59.858	9995.6	33.319	66.361	9912.7	33.042

H_O^C IS THE ENTHALPY OF THE SOLID AT 0 DEG K AND 1 ATM PRESSURE.

Cole, A. G., Hutchens, J. O. and Stout, J. W.,
Heat capacities from 11 to 305°K. and entropies of l-arginine.HCl,
l-histidine.HCl, and l-lysine.HCl,
J. Phys. Chem. 67, 2245-2247 (1963).

TABLE 16

MOLAL THERMODYNAMIC FUNCTIONS FOR L-CYSTINE
$((HOOC(NH_2)CHCH_2S-)_2)$
SOLID PHASE

GRAM MOLECULAR WT. = 240.30154 GRAMS — 1 CAL = 4.1840 JOULES

T DEG K = 273.15 + T DEG C

T	C_P^C	$(H_T^O-H_O^C)$	$(H_T^O-H_O^C)/T$	S_T^O	$-(G_T^O-H_O^C)$	$-(G_T^O-H_O^C)/T$
DEG K	CAL/DEG	CAL	CAL/DEG	CAL/DEG	CAL	CAL/DEG
0.00	0.000	0.000	0.000	0.000	0.000	0.000
5.00	0.250	0.263	0.013	0.017	0.021	0.004
10.00	0.393	0.992	0.099	0.132	0.333	0.033
15.00	1.264	4.888	0.326	0.437	1.662	0.111
20.00	2.650	14.509	0.725	0.981	5.104	0.255
25.00	4.311	31.833	1.273	1.747	11.840	0.474
30.00	6.195	57.818	1.927	2.630	22.867	0.762
35.00	7.919	92.852	2.653	3.766	38.958	1.113
40.00	9.701	136.94	3.423	4.941	60.691	1.517
45.00	11.424	189.76	4.217	6.183	88.477	1.966
50.00	13.115	251.13	5.023	7.475	122.60	2.452
55.00	14.645	320.69	5.831	8.799	163.28	2.969
60.00	16.232	398.02	6.634	10.144	210.63	3.511
65.00	17.736	482.96	7.430	11.503	264.74	4.073
70.00	19.125	575.18	8.217	12.869	325.67	4.652
75.00	20.449	674.10	8.988	14.234	393.43	5.246
80.00	21.783	779.66	9.746	15.596	466.01	5.850
85.00	23.096	891.88	10.493	16.956	543.39	6.463
90.00	24.394	1010.4	11.227	18.311	637.56	7.084
95.00	25.427	1134.6	11.945	19.655	732.48	7.710
100.00	26.515	1264.6	12.646	20.987	834.09	8.341
105.00	27.605	1399.6	13.333	22.307	942.34	8.975
110.00	28.691	1540.6	14.006	23.616	1057.2	9.610
115.00	29.737	1686.7	14.667	24.915	1178.5	10.246
120.00	30.758	1837.9	15.316	26.202	1306.3	10.886
125.00	31.767	1994.2	15.954	27.478	1440.5	11.524
130.00	32.786	2155.7	16.582	28.744	1581.0	12.162
135.00	33.796	2322.1	17.201	30.000	1727.0	12.799
140.00	34.760	2493.6	17.811	31.247	1881.0	13.436
145.00	35.749	2669.9	18.413	32.484	2040.4	14.071
150.00	36.694	2851.0	19.006	33.712	2205.9	14.706
155.00	37.653	3036.8	19.592	34.931	2377.5	15.336
160.00	38.611	3227.5	20.172	36.142	2555.2	15.970
165.00	39.560	3422.9	20.745	37.344	2738.9	16.599
170.00	40.497	3622.1	21.312	38.539	2928.6	17.227
175.00	41.429	3825.9	21.874	39.726	3124.2	17.853
180.00	42.355	4034.3	22.430	40.906	3325.8	18.477
185.00	43.277	4247.4	22.980	42.079	3533.3	19.099
190.00	44.179	4464.9	23.526	43.245	3746.6	19.719
195.00	45.079	4693.1	24.067	44.404	3965.7	20.337
200.00	45.952	4920.7	24.604	45.557	4190.6	20.953
205.00	46.822	5152.6	25.135	46.702	4421.3	21.567
210.00	47.693	5388.9	25.662	47.841	4657.7	22.179
215.00	48.567	5629.6	26.184	48.973	4899.7	22.789
220.00	49.439	5874.6	26.703	50.100	5147.4	23.397
225.00	50.304	6124.0	27.218	51.221	5400.7	24.003
230.00	51.167	6377.6	27.729	52.336	5659.6	24.607
235.00	52.021	6635.6	28.236	53.445	5924.0	25.209
240.00	52.881	6897.8	28.741	54.549	6194.0	25.808
245.00	53.743	7164.4	29.242	55.649	6469.5	26.406
250.00	54.610	7434.3	29.741	56.743	6750.5	27.002
255.00	55.494	7710.6	30.237	57.833	7036.9	27.596
260.00	56.324	7990.1	30.731	58.919	7328.8	28.188
265.00	57.166	8273.8	31.222	60.000	7626.1	28.778
270.00	57.992	8561.7	31.710	61.076	7928.8	29.366
273.15	58.509	8745.2	32.016	61.752	8122.3	29.736
275.00	58.813	8853.7	32.195	62.148	8236.9	29.952
280.00	59.633	9149.8	32.676	63.215	8550.3	30.537
285.00	60.455	9450.1	33.158	64.277	8869.0	31.119
290.00	61.283	9754.4	33.636	65.336	9193.0	31.700
295.00	62.105	10063.	34.111	66.391	9522.4	32.279
298.15	62.622	10259.	34.410	67.053	9732.5	32.643
300.00	62.924	10375.	34.585	67.441	9856.9	32.856

H_O^C IS THE ENTHALPY OF THE SOLID AT 0 DEG K AND 1 ATM PRESSURE.

Huffman, H. M. and Ellis, E. L.,
Thermal data. III. The heat capacities, entropies and free energies of four organic compounds containing sulfur,
J. Am. Chem. Soc. 57, 46-48 (1935).

Hutchens, J. O., Cole, A. G. and Stout, J. W.,
Heat capacities and entropies of l-cystine and l-methionine,
J. Biol. Chem. 239, 591-595 (1964).

TABLE 17

MOLAL THERMODYNAMIC FUNCTIONS FOR L-PROLINE
(C_4H_8NCOOH)
SOLID PHASE

GRAM MOLECULAR WT. = 115.13298 GRAMS — 1 CAL = 4.1840 JOULES
T DEG K = 273.15 + T DEG C

T	C_P^C	$(H_T^O-H_O^C)$	$(H_T^O-H_O^C)/T$	S_T^O	$-(G_T^O-H_O^C)$	$-(G_T^O-H_O^C)/T$
DEG K	CAL/DEG	CAL	CAL/DEG	CAL/DEG	CAL	CAL/DEG
0.00	0.000	0.000	0.000	0.000	0.000	0.000
5.00	0.039	0.049	0.010	0.013	0.016	0.003
10.00	0.310	0.780	0.078	0.104	0.261	0.026
15.00	0.981	3.828	0.255	0.342	1.305	0.087
20.00	1.989	11.161	0.558	0.757	3.982	0.199
25.00	3.114	23.900	0.956	1.321	9.126	0.365
30.00	4.267	42.349	1.412	1.991	17.368	0.579
35.00	5.411	66.560	1.902	2.735	29.155	0.833
40.00	6.494	96.353	2.409	3.529	44.798	1.120
45.00	7.512	131.39	2.920	4.353	64.493	1.433
50.00	8.459	171.36	3.427	5.194	88.356	1.767
55.00	9.320	215.83	3.924	6.041	116.44	2.117
60.00	10.144	264.51	4.408	6.888	148.77	2.479
65.00	10.912	317.17	4.880	7.731	185.32	2.851
70.00	11.607	373.51	5.336	8.565	226.06	3.229
75.00	12.272	433.21	5.776	9.389	270.95	3.613
80.00	12.934	496.24	6.203	10.202	319.93	3.999
85.00	13.553	562.48	6.617	11.005	372.96	4.388
90.00	14.129	631.69	7.019	11.796	429.96	4.777
95.00	14.675	703.72	7.408	12.575	490.90	5.167
100.00	15.194	778.40	7.784	13.341	555.69	5.557
105.00	15.703	855.64	8.149	14.095	624.29	5.946
110.00	16.215	935.43	8.504	14.837	696.62	6.333
115.00	16.731	1017.8	8.850	15.569	772.64	6.719
120.00	17.244	1102.7	9.189	16.292	852.29	7.102
125.00	17.748	1190.2	9.522	17.006	935.54	7.484
130.00	18.256	1280.2	9.848	17.712	1022.3	7.864
135.00	18.767	1372.8	10.169	18.411	1112.6	8.242
140.00	19.275	1467.9	10.485	19.102	1206.4	8.617
145.00	19.787	1565.5	10.797	19.788	1303.7	8.991
150.00	20.314	1665.8	11.105	20.467	1404.3	9.362
155.00	20.848	1768.7	11.411	21.142	1508.3	9.731
160.00	21.379	1874.3	11.714	21.812	1615.7	10.098
165.00	21.907	1982.5	12.015	22.478	1726.4	10.463
170.00	22.428	2093.3	12.314	23.140	1840.5	10.826
175.00	22.936	2206.9	12.611	23.798	1957.8	11.188
180.00	23.518	2323.1	12.906	24.453	2078.5	11.547
185.00	24.050	2442.0	13.200	25.105	2202.4	11.905
190.00	24.597	2563.7	13.493	25.754	2329.5	12.261
195.00	25.124	2686.0	13.785	26.399	2459.9	12.615
200.00	25.641	2814.9	14.075	27.042	2593.5	12.968
205.00	26.156	2944.4	14.363	27.682	2730.3	13.319
210.00	26.678	3076.5	14.650	28.318	2870.3	13.668
215.00	27.210	3211.2	14.936	28.952	3013.5	14.016
220.00	27.745	3348.6	15.221	29.584	3159.8	14.363
225.00	28.274	3488.6	15.505	30.213	3309.3	14.708
230.00	28.793	3631.3	15.788	30.840	3462.0	15.052
235.00	29.306	3776.6	16.070	31.465	3617.7	15.395
240.00	29.824	3924.4	16.352	32.087	3776.6	15.736
245.00	30.350	4074.8	16.632	32.708	3938.6	16.076
250.00	30.887	4227.9	16.912	33.326	4103.7	16.415
255.00	31.429	4383.7	17.191	33.943	4271.9	16.752
260.00	31.969	4542.2	17.470	34.559	4443.1	17.089
265.00	32.506	4703.4	17.749	35.173	4617.4	17.424
270.00	33.137	4867.2	18.027	35.785	4794.8	17.759
273.15	33.371	4971.8	18.202	36.171	4908.2	17.969
275.00	33.768	5033.7	18.304	36.396	4975.3	18.092
280.00	34.102	5202.9	18.582	37.006	5158.8	18.424
285.00	34.642	5374.8	18.859	37.614	5345.3	18.756
290.00	35.190	5549.3	19.136	38.222	5534.9	19.086
295.00	35.748	5726.7	19.412	38.828	5727.6	19.415
298.15	36.106	5839.8	19.587	39.210	5850.5	19.623
300.00	36.319	5906.8	19.689	39.434	5923.2	19.744

H_O^C IS THE ENTHALPY OF THE SOLID AT 0 DEG K AND 1 ATM PRESSURE.

Huffman, H. M. and Fox, S. W.,
Thermal data. XIII. The heat capacities and entropies of creatine hydrate, dl-citrulline, dl-ornithine, l-proline and taurine,
J. Am. Chem. Soc. 62, 3464-3465 (1940).

Cole, A. G., Hutchens, J. O. and Stout, J. W.,
Heat capacities from 11 to 305°K. and entropies of l-phenylalanine, l-proline, l-tryptophane, and l-tyrosine. Some free energies of formation,
J. Phys. Chem. 67, 1852-1855 (1963).

Section II

Heats and Free Energies of Formation of Compounds of C, H, N, O, P, and S

E. S. Domalski and George T. Armstrong

The data on the accompanying tables were obtained by a search of the references listed, each of which is a competent review of thermodynamic data covering many of the compounds of interest. Where data were available in Reference 1 they were used. Values found in Reference 2 were taken if information was not found in the other references. The list is given in the Appendix of NBS Report 8521 and was used as a basis for the search. Only a few compounds were included in the table which were not on the original list. On this account, the list of compounds is by no means complete, and it will be augmented in the future. While data in Table 1 may be expected to be the best available for most of the compounds, new data may be available for a few, and not have been included in the reviews searched. Estimates of the uncertainties which should be ascribed to the data have not yet been made here. Absence of data for a compound listed in the table does not necessarily, at this stage of the study, mean that no measurements have been made on the compound. We have had no way of indicating partial data, insufficient for calculation of enthalpy or free energy of formation. In addition, as mentioned before, very recent publications have not been covered thus far in the search.

TABLE I

Preliminary Table of Selected Thermodynamic Data on Compounds of CHNOPS

Containing Not More Than One C Atom per Molecule

Empirical Formula	Functional Group Formula	Name		State	ΔH°_{f298} kcal mole^{-1}	ΔF°_{f298} kcal mole^{-1}	S°_{298} cal mole^{-1}deg^{-1}	Ref.
C	C	carbon, monatomic		g	171.291	160.442	37.760	[1]
		graphite		c	0	0	1.372	[1]
		diamond		c	0.4533	0.6930	0.568	[1]
CH	CH	methylidyne		g	142.1			[4]
CHN	HCN	hydrogen cyanide		g	31.2	28.7	48.23	[2]
				ℓ	25.2	29.0	26.97	[2]
		hydrocyanic acid,	m=1	aq	25.2	26.8	30.8	[2]
CHNO	HCNO	hydrogen cyanate		g				
CHNO	HCNO	cyanic acid,	m=1	aq	-35.1	-28.9	43.6	[2]
CHNS	HCNS	hydrogen thiocyanate		g				
		thiocyanic acid,	m=1	aq	17.7			[2]
CHN_3O_6	$CH(NO_2)_3$	trinitromethane		ℓ	-18.6			[2]
CHO	CHO	formyl		g	- 2.900	- 6.543	53.683	[4]
CH_2	CH_2	methylene		g	95.000	91.809	43.271	[11]
CH_2N_2	$(NH_2)CN$	cyanamide		c	9.2			[2]
			800 H_2O	aq	12.9			[2]
CH_2N_2	$(CH_2)N_2$	diazomethane		g				
$CH_2N_2O_3$	$(NO_2)CH(:NOH)$	formonitriolic acid		c				
$CH_2N_2O_4$	$CH_2(NO_2)_2$	dinitromethane		ℓ				
CH_2N_4	NHN:NCH:N	1,2,3,5-tetrazole		c				
CH_2O	HCHO	formaldehyde		g	-27.700	-26.266	52.261	[4]
			60 H_2O	aq	-42.5			[2]
			40 CH_3OH	aq	-42.7			[2]
$(CH_2O)x$	$(CH_2O)x$	paraformaldehyde		c				
CH_2O_2	HCOOH	formic acid		g	-86.67	-80.24	60.0	[2]
				ℓ	-97.8	-82.7	30.82	[2]
			m=1	aq	-98.0	-85.1	39.1	[2]
			0.2 H_2O	aq	-97.86			[2]
			0.5 H_2O	aq	-97.93			[2]
			1.0 H_2O	aq	-98.00			[2]
			1.5 H_2O	aq	-98.01			[2]
			2.0 H_2O	aq	-97.99			[2]
			2.5 H_2O	aq	-97.99			[2]
			4 H_2O	aq	-97.98			[2]
			5 H_2O	aq	-97.96			[2]
			10 H_2O	aq	-97.94			[2]
			15 H_2O	aq	-97.93			[2]
			25 H_2O	aq	-97.94			[2]
			50 H_2O	aq	-97.95			[2]
			100 H_2O	aq	-97.96			[2]
			200 H_2O	aq	-97.97			[2]
			∞ H_2O	aq	-98.0			[2]
CH_2O_3	H_2CO_3	carbonic acid undissociated,	m=1	aq	-167.17	-148.94	45.0	[1]
CH_2S_3	H_2CS_3	trithiocarbonic acid		aq				
CH_3	CH_3	methyl		g	31.940	32.546	46.137	[8]
CH_3NO	$HCONH_2$	formamide		ℓ	-61.6			[2]
				aq	-56.0			[2]
CH_3NO	$H_2C(:NOH)$	formaldehyde oxime		ℓ				
CH_3NO_2	CH_3NO_2	nitromethane		ℓ	-21.28	2.26	41.1	[2]
				aq	-20.7			[2]

Table I. Selected Thermodynamic Data (Cont.)

Empirical Formula	Functional Group Formula	Name	State	ΔH°_{f298} kcal mole^{-1}	ΔF°_{f298} kcal mole^{-1}	S°_{298} cal mole^{-1}deg^{-1}	Ref.
CH_5NO	CH_3ONH_2	methoxyamine	c				
			aq				
CH_5NO_2	$HCOONH_4$	ammonium formate	c	-132.8			[2]
			aq	-129.83			[2]
CH_5NO_3	NH_4HCO_3	ammonium bicarbonate	c	-203.7			[2]
		m=1	aq	-196.92	-159.31	49.7	[2]
CH_5N_3	$NH_2C(NH)NH_2$	guanidine	c	- 17.0			[2]
			aq	- 18.3			[2]
CH_5N_3O	$NH_2CONHNH_2$	semicarbazide	c				
			aq				
$CH_5N_3O_3S$	$NH_2CSNH_2 \cdot HNO_3$	thiourea nitrate	c	- 74.5			[2]
$CH_5N_3O_4$	$NH_2CONH_2 \cdot HNO_3$	urea nitrate	c	-114.8			[2]
			aq				
CH_5N_3S	$NH_2CSNHNH_2$	thiosemicarbazide	c				
			aq				
CH_5O_3P	$CH_3PO(OH)_2$	methyl phosphonic acid	c				
			aq				
CH_5P	CH_3PH_2	methyl phosphine	g				
			ℓ				
CH_6N_2	CH_3NHNH_2	methyl hydrazine	g				
			ℓ				
$CH_6N_2O_2$	NH_2COONH_4	ammonium carbamate	c	-154.21	-109.47	39.70	[2]
			aq	-150.4			[2]
CH_6N_4	$NH_2C(NH)NHNH_2$	1-aminoguanidine	c				
			aq				
CH_6N_4O	$CO(NHNH_2)_2$	carbohydrazide	c				
$CH_8N_2O_3$	$(NH_4)_2CO_3$	ammonium carbonate	c				
			aq	-225.11	-164.22	41.2	[2]
$CH_{12}O_8$	$CO_2 \cdot 6H_2O$	carbon dioxide hexahydrate	c	-520			[2]
$CH_{16}O_6$	$CH_4 \cdot 6H_2O$	methane hexahydrate	c	-445			[2]
CN	CN	cyano	g	109.000	101.796	48.406	[8]
$(CN)_x$	$(CN)_x$	paracyanogen	c				
CN_4	$CN(N_3)$	cyanogen azide	c	92.6			[2]
$\frac{1}{x}(CN_4)_x$	$\frac{1}{x}(CN(N_3))_x$	paracyanogen azide	c	82.2			[2]
CN_4O_8	$C(NO_2)_4$	tetranitromethane	ℓ	8.8			[2]
CO	CO	carbon monoxide	g	- 26.416	- 32.780	42.214	[1]
COS	COS	carbonyl sulfide	g	- 33.080	- 39.589	55.323	[4]
CO_2	CO_2	carbon dioxide	g	- 94.051	- 94.261	51.072	[1]
		undissociated, m=1	aq	- 98.85	- 92.26	28.3	[1]
CP	CP	carbon phosphide	g	111.700	98.327	51.661	[6]
CS	CS	carbon monosulfide	g	55.000	42.684	50.299	[8]
CS_2	CS_2	carbon disulfide	ℓ	27.980	15.991	56.832	[5]
C_2	C_2	carbon diatomic	g	199.026	185.636	47.628	[6]
$C_2H_8N_2O_4$	$N_2H_4 \cdot (HCOOH)_2$	hydrazine formate	c				
			aq				
C_2N_2	$(CN)_2$	cyanogen	g	73.870	71.117	57.711	[4]

Table I. Selected Thermodynamic Data (Cont.)

Empirical Formula	Functional Group Formula	Name	State	ΔH^{o}_{f298} kcal mole^{-1}	ΔF^{o}_{f298} kcal mole^{-1}	S^{o}_{298} cal mole^{-1}deg^{-1}	Ref.
C_3	C_3	carbon, triatomic	g	189.670	175.777	50.688	[3]
C_3O_2	C_3O_2	carbon suboxide	g	- 8.300	-10.726	61.236	[3]
C_3S_2	C_3S_2	carbon subsulfide	g				
C_4	C_4	carbon, tetratomic	g	242.321	226.629	58.083	[3]
C_4N_2	$C_2(CN)_2$	carbon subnitride	g	122.900	113.575	67.936	[3]
C_5	C_5	carbon, pentatomic	g	242.374	226.634	59.608	[3]
H	H	hydrogen monatomic	g	52.095	48.580	27.391	[1]
HN	HN	imidogen	g	79.200	77.765	43.297	[3]
HN_3	HN_3	hydrogen azide	g	70.3	78.4	57.09	[1]
			ℓ	63.1	78.2	33.6	[1]
		hydrazoic acid undissociated, m=1	aq	62.16	76.9	34.9	[1]
HNO	HNO	nitroxyl	g	23.800	26.859	52.729	[9]
HNO_2	HNO_2	cis hydrogen nitrite	g	-18.64	-10.27	59.43	[1]
		trans hydrogen nitrite	g	-19.15	-10.82	59.54	[1]
		hydrogen nitrite (cis-trans mixture)	g	-19.0	-11.0	60.7	[1]
		nitrous acid	aq	-28.5	-13.3	36.5	[1]
HNO_3	HNO_3	hydrogen nitrate	g	-32.28	-17.87	63.64	[1]
			ℓ	-41.61	-19.31	37.19	[1]
		nitric acid, m=1	aq	-49.56	-26.61	35.0	[1]
		1 H_2O	aq	-44.845			[1]
		2 H_2O	aq	-46.500			[1]
		3 H_2O	aq	-47.459			[1]
		5 H_2O	aq	-48.462			[1]
		10 H_2O	aq	-49.192			[1]
		25 H_2O	aq	-49.430			[1]
		50 H_2O	aq	-49.439			[1]
		100 H_2O	aq	-49.440			[1]
		500 H_2O	aq	-49.468			[1]
		1000 H_2O	aq	-49.484			[1]
		5000 H_2O	aq	-49.518			[1]
		10000 H_2O	aq	-49.529			[1]
		50000 H_2O	aq	-49.545			[1]
H_3NO_4	$HNO_3 \cdot H_2O$	nitric acid hydrate	ℓ	-112.960	-78.410	51.83	[2]
HNO_5S	$(NO)HSO_4$	nitrosyl sulfuric acid	c				
HO	OH	hydroxyl	g	9.31	8.18	43.890	[1]
HO_2	HO_2	hydroperoxyl	g	5.000	8.049	54.383	[10]
HP	PH	phosphorus monohydride	g	59.170	51.467	46.891	[7]
HP_2	P_2H	diphosphorus monohydride	c	-14.5			[2]
HPO_3	HPO_3	metaphosphoric acid	c	-226.7			[1]
			aq	-233.5			[1]
HS	SH	sulfur monohydride	g	32.000	24.990	46.745	[3]
H_2		hydrogen	g	0	0	31.208	[1]
			aq	-1.0	4.2	13.8	[1]
H_2N	NH_2	amidogen	g	40.300	42.976	45.113	[3]
$H_2N_2O_2$	$H_2N_2O_2$	hyponitrous acid, m=1	aq	-13.7	8.4	52	[2]
H_2O	H_2O	water	g	-57.796	-54.635	45.104	[1]
			ℓ	-68.315	-56.688	16.71	[1]
H_2O_2	H_2O_2	hydrogen peroxide	g	-32.58	-25.25	55.6	[1]
			ℓ	-44.88	-28.78	26.2	[1]
		m=1	aq	-45.69	-32.05	34.4	[1]
		0.5 H_2O	aq	-45.198			[1]
		1 H_2O	aq	-45.365			[1]
		5 H_2O	aq	-45.638			[1]
		10 H_2O	aq	-45.670			[1]
		50 H_2O	aq	-45.687			[1]

Table I. Selected Thermodynamic Data (Cont.)

Empirical Formula	Functional Group Formula	Name	State	ΔH°_{f298} kcal mole^{-1}	ΔF°_{f298} kcal mole^{-1}	S°_{298} cal mole^{-1}deg^{-1}	Ref.
H_2P	PH_2	phosphorus dihydride	g	30.100	25.884	50.800	[12]
H_2S	H_2S	hydrogen sulfide	g	-4.93	-8.02	49.16	[1]
		hydrosulfuric acid	aq	-9.5	-6.66	29	[1]
H_2S_2	H_2S_2	hydrogen disulfide	l	-5.5			[2]
H_2S_3	H_2S_3	hydrogen trisulfide	g				
H_2S_5	H_2S_5	hydrogen pentasulfide	l	0.7			[2]
H_2SO_3	H_2SO_3	sulfurous acid	aq	-145.51	-128.56	55.5	[1]
		undissociated, m=1					
		100 H_2O	aq	-146.369			[1]
		200 H_2O	aq	-146.670			[1]
		500 H_2O	aq	-147.126			[1]
		1000 H_2O	aq	-147.516			[1]
		2000 H_2O	aq	-147.957			[1]
		5000 H_2O	aq	-148.524			[1]
		10000 H_2O	aq	-148.899			[1]
H_2SO_4	H_2SO_4	sulfuric acid	l	-194.548	-164.942	37.501	[1]
		m=1	aq	-217.32	-177.97	4.8	[1]
		1 H_2O	aq	-201.193			[1]
		2 H_2O	aq	-204.425			[1]
		3 H_2O	aq	-206.241			[1]
		4 H_2O	aq	-207.428			[1]
		5 H_2O	aq	-208.288			[1]
		6 H_2O	aq	-208.944			[1]
		8 H_2O	aq	-209.865			[1]
		10 H_2O	aq	-210.451			[1]
		15 H_2O	aq	-211.191			[1]
		25 H_2O	aq	-211.660			[1]
		50 H_2O	aq	-211.941			[1]
		75 H_2O	aq	-212.068			[1]
		100 H_2O	aq	-212.150			[1]
		115 H_2O	aq	-212.192			[1]
		200 H_2O	aq	-212.387			[1]
		300 H_2O	aq	-212.565			[1]
		500 H_2O	aq	-212.833			[1]
		800 H_2O	aq	-213.128			[1]
		1000 H_2O	aq	-213.275			[1]
		1500 H_2O	aq	-213.552			[1]
		2000 H_2O	aq	-213.740			[1]
		3000 H_2O	aq	-214.015			[1]
		5000 H_2O	aq	-214.390			[1]
		10000 H_2O	aq	-215.060			[1]
		20000 H_2O	aq	-215.880			[1]
		50000 H_2O	aq	-216.545			[1]
		100000 H_2O	aq	-216.875			[1]
		500000 H_2O	aq	-217.189			[1]
H_2SO_5	H_2SO_5	peroxymonosulfuric acid	c				
$H_2S_2O_4$	$H_2S_2O_4$	dithionous acid	aq	-164			[2]
$H_2S_2O_6$	$H_2S_2O_6$	dithionic acid	aq	-280.0			[2]
$H_2S_2O_7$	$H_2S_2O_7$	pyrosulfuric acid	c	-304.4			[1]
$H_2S_2O_8$	$H_2S_2O_8$	peroxydisulfuric acid, m=1	aq	-320.0	-265.4	59.3	[2]
H_3N	NH_3	ammonia	g	-11.07	-3.94	45.97	[1]
		undissociated, m=1	aq	-19.19	-6.35	26.6	[1]
		1 H_2O	aq	-18.011			[1]
		2 H_2O	aq	-18.560			[1]
		5 H_2O	aq	-18.945			[1]
		10 H_2O	aq	-19.074			[1]
		20 H_2O	aq	-19.125			[1]
		50 H_2O	aq	-19.156			[1]
		100 H_2O	aq	-19.167			[1]
		500 H_2O	aq	-19.173			[1]
		1000 H_2O	aq	-19.171			[1]
		5000 H_2O	aq	-19.154			[1]
		10000 H_2O	aq	-19.140			[1]
		50000 H_2O	aq	-19.086			[1]

Table I. Selected Thermodynamic Data (Cont.)

Empirical Formula	Functional Group Formula	Name	State	ΔH^o_{f298} kcal mole^{-1}	ΔF^o_{f298} kcal mole^{-1}	S^o_{298} cal mole^{-1}deg^{-1}	Ref.
H_3NO	NH_2OH	hydroxylamine	c	-27.3			[1]
			aq	-23.5			[1]
H_3NO_3S	$(NH_2)SO_3H$	sulfamic acid	c	-161.3			[1]
			aq	-156.3			[1]
H_3O_2P	H_3PO_2	hypophosphorous acid	c	-144.5			[1]
		200 H_2O	aq	-144.4			[1]
H_3O_3P	H_3PO_3	orthophosphorous acid	c	-228.3			[1]
			aq	-228.4			[1]
H_3O_4P	H_3PO_4	orthophosphoric acid	c	-305.7	-267.5	26.41	[1]
			ℓ	-302.8			[1]
		m=1	aq	-307.92	-273.10	37.8	[1]
		1 H_2O	aq	-304.69			[1]
		1.5 H_2O	aq	-305.26			[1]
		2 H_2O	aq	-305.60			[1]
		3 H_2O	aq	-306.23			[1]
		4 H_2O	aq	-306.60			[1]
		5 H_2O	aq	-306.87			[1]
		7 H_2O	aq	-307.20			[1]
		10 H_2O	aq	-307.48			[1]
		20 H_2O	aq	-307.831			[1]
		50 H_2O	aq	-308.067			[1]
		100 H_2O	aq	-308.176			[1]
		200 H_2O	aq	-308.276			[1]
		500 H_2O	aq	-308.403			[1]
		1000 H_2O	aq	-308.532			[1]
		2000 H_2O	aq	-308.696			[1]
		3000 H_2O	aq	-308.818			[1]
		5000 H_2O	aq	-308.982			[1]
		10000 H_2O	aq	-309.197			
H_3P	PH_3	phosphine	g	1.3	3.2	50.22	[1]
			aq	-2.16	0.35	48.2	[1]
H_4N_2	N_2H_4	hydrazine	g	22.80	38.07	56.97	[1]
			ℓ	12.10	35.67	28.97	[1]
		undissociated, m=1	aq	8.20	30.6	33	[1]
$H_4N_2O_2$	NH_4NO_2	ammonium nitrite	c	-61.3			[1]
		m=1	aq	-56.7	-27.9	60.6	[1]
$H_4N_2O_3$	NH_4NO_3	ammonium nitrate	c,V	-87.38	-43.98	36.11	[1]
		m=1	aq	-81.23	-43.58	62.1	[1]
		3 H_2O	aq	-83.485			[1]
		5 H_2O	aq	-83.050			[1]
		10 H_2O	aq	-82.470			[1]
		25 H_2O	aq	-81.866			[1]
		50 H_2O	aq	-81.538			[1]
		100 H_2O	aq	-81.318			[1]
		500 H_2O	aq	-81.183			[1]
		1000 H_2O	aq	-81.177			[1]
		5000 H_2O	aq	-81.194			[1]
		10000 H_2O	aq	-81.202			[1]
$H_4N_2O_4$	$NH_2OH \cdot HNO_3$	hydroxylamine nitrate	c	-87.6			[1]
			aq	-82.4			[1]
H_4N_4	NH_4N_3	ammonium azide	c	27.6	65.5	26.9	[1]
		m=1	aq	34.1	64.3	52.7	[1]
$H_4O_{4.5}P$	$H_3PO_4 \cdot \frac{1}{2}H_2O$	phosphoric acid hemihydrate	c	-342.1	-296.9	30.87	[1]
			ℓ	-339.3			[2]
H_4O_5S	$H_2SO_4 \cdot H_2O$	sulfuric acid hydrate	ℓ	-269.508	-227.186	50.56	[1]
H_4P_2	P_2H_4	diphosphine	g	5.0			[1]
			ℓ	-1.2			[1]
$H_4P_2O_7$	$H_4P_2O_7$	pyrophosphoric acid	c	-535.6			[1]
		supercooled	ℓ	-533.4			[1]
		m=1	aq	-542.2	-486.8	68	[1]
		500 H_2O	aq	-543.0			[1]

Table I. Selected Thermodynamic Data (Cont.)

Empirical Formula	Functional Group Formula	Name	State	ΔH^o_{f298} kcal mole^{-1}	ΔF^o_{f298} kcal mole^{-1}	S^o_{298} cal mole^{-1}deg^{-1}	Ref.
H_5NO	NH_4OH	ammonium hydroxide	ℓ	-86.33	-60.74	39.57	[1]
		undissociated, m=1	aq	-87.505	-63.04	43.3	[1]
		ionized, m=1	aq	-86.64	-56.56	24.5	[1]
H_5NS	NH_4SH	ammonium hydrosulfide	c	-37.5	-12.1	23.3	[1]
		200 H_2O	aq	-34.8			[1]
H_5NO_3S	NH_4HSO_3	ammonium bisulfite	c	-183.7			[1]
		300 H_2O	aq	-181.3			[1]
H_5NO_4S	NH_4HSO_4	ammonium bisulfate	c	-245.45			[1]
		200 H_2O	aq	-245.65			[1]
H_5NO_5S	$NH_2OH \cdot H_2SO_4$	hydroxylamine sulfate	aq	-246.7			[1]
$H_5N_3O_3$	$N_2H_4 \cdot HNO_3$	hydrazine nitrate	c	-60.13			[1]
		m=1	aq	-51.41	-6.91	71	[1]
H_6NO_2P	$(NH_4)H_2PO_2$	ammonium hypophosphite	c				
			aq				
H_6NO_3P	$(NH_4)H_2PO_3$	ammonium orthophosphite	c				
			aq				
H_6NO_4P	$(NH_4)H_2PO_4$	primary ammonium orthophosphate	c	-345.94	-289.89	36.32	[1]
		m=1	aq	-342.05	-289.70	48.7	[1]
		15 H_2O	aq	-342.157			[1]
		50 H_2O	aq	-342.113			[1]
		100 H_2O	aq	-342.088			[1]
		500 H_2O	aq	-342.059			[1]
		1000 H_2O	aq	-342.055			[1]
		∞ H_2O	aq	-342.05			[1]
H_6N_2O	$N_2H_4 \cdot H_2O$	hydrazine hydrate	g	-49.0	-18.9	63	[1]
			ℓ	-58.01			[1]
		undissociated, m=1	aq	-60.11	-26.1	49.7	[1]
$H_6N_2O_3S$	$(NH_2)SO_3NH_4$	ammonium sulfamate	c				
			aq				
$H_6N_2O_4S$	$N_2H_4 \cdot H_2SO_4$	hydrazine sulfate	c	-231.6			[2]
		1000 H_2O	aq	-223.44			[2]
H_6P_{12}	$(P_2H_4)_3$	diphosphine trimer	c				
$H_{6.5}O_{8.5}P_2$	$H_4P_2O_7 \cdot \frac{3}{2}H_2O$	pyrophosphoric acid hydrate	c	-640.9			[1]
			ℓ	-637.3			[1]
H_7NO_6	$HNO_3 \cdot 3H_2O$	nitric acid trihydrate	ℓ	-252.203	-193.701	82.92	[2]
$H_7N_2O_3P$	$N_2H_4 \cdot H_3PO_3$	hydrazine orthophosphite	c				
			aq				
$H_7N_2O_4P$	$N_2H_4 \cdot H_3PO_4$	hydrazine orthophosphate	c				
			aq				
$H_8N_2O_3S$	$(NH_4)_2SO_3$	ammonium sulfite	c	-211.6			[1]
		400 H_2O	aq	-211.0			[1]
$H_8N_2O_3S_2$	$(NH_4)_2S_2O_3$	ammonium thiosulfate	c				
			aq				
$H_8N_2O_4S$	$(NH_4)SO_4$	ammonium sulfate	c	-282.23	-215.56	52.6	[1]
		m=1	aq	-280.66	-215.77	58.6	[1]
		10 H_2O	aq	-280.72			[1]
		50 H_2O	aq	-280.51			[1]
		100 H_2O	aq	-280.407			[1]
		500 H_2O	aq	-280.242			[1]
		1000 H_2O	aq	-280.217			[1]
$H_8N_2O_5S_2$	$(NH_4)_2S_2O_5$	ammonium pyrosulfite, m=1	aq	-295.3			[2]
$H_8N_2O_6P_2$	$N_2H_4 \cdot H_4P_2O_6$	hydrazine hypophosphite	c				
			aq				
$H_8N_2O_6S$	$2NH_2OH \cdot H_2SO_4$	dihydroxylamine sulfate	aq	-281.3			[1]
$H_8N_2O_6S_2$	$(NH_4)_2S_2O_6$	ammonium dithionate	c				
			aq				

Table I. Selected Thermodynamic Data (Cont.)

Empirical Formula	Functional Group Formula	Name	State	ΔH^o_{f298} kcal mole^{-1}	ΔF^o_{f298} kcal mole^{-1}	S^o_{298} cal mole^{-1}deg^{-1}	Ref.
$H_8N_2O_7S_2$	$(NH_4)_2S_2O_7$	ammonium pyrosulfate	c				
			aq				
$H_8N_2O_8S_2$	$(NH_4)_2S_2O_8$	ammonium peroxydisulfate	c	-392.5			[1]
			aq	-383.3			[1]
H_8N_2S	$(NH_4)_2S$	ammonium monosulfide	aq	-54.5			[2]
$H_8N_2S_4$	$(NH_4)_2S_4$	ammonium tetrasulfide	c	-67.4			[2]
			aq	-60.0			[2]
$H_8N_2S_5$	$(NH_4)_2S_5$	ammonium pentasulfide	c	-68.8			[2]
			aq	-61.2			[2]
$H_8O_4SP_2$	$(PH_4)_2SO_4$	phosphonium sulfate	c				
			aq				
$H_9N_2O_4P$	$(NH_4)_2HPO_4$	secondary ammonium orthophosphate	c	-374.50			[1]
			aq	-372.71	-298.85	46.2	[1]
		15 H_2O	aq	-370.40			[1]
		50 H_2O	aq	-370.85			[1]
		100 H_2O	aq	-371.22			[1]
		500 H_2O	aq	-371.4			[1]
		1000 H_2O	aq	-371.44			[1]
$H_{10}N_2O_4S$	$(NH_4)_2SO_3 \cdot H_2O$	ammonium sulfite hydrate	c	-283.8			[1]
$H_{10}N_2O_6P$	$N_2H_4 \cdot 2H_3PO_3$	hydrazine diorthophosphite	c				
			aq				
$H_{10}N_2O_6P_2$	$(NH_4)_2H_2P_2O_6$	diammonium hypophosphate	c				
			aq				
$H_{10}N_4O_4S$	$(N_2H_4)_2 \cdot H_2SO_4$	dihydrazine sulfate	c	-229.2			[1]
		m=1	aq	-221.0	-138.5	77	[1]
$H_{12}N_3O_4P$	$(NH_4)_3PO_4$	tertiary ammonium orthophosphate	c	-399.6			[1]
		600 H_2O	aq	-391.3			[1]
$H_{12}N_4O_5S$	$(N_2H_4)_2 \cdot H_2SO_4 \cdot H_2O$	dihydrazine sulfate hydrate	c	-291.3			[1]
$H_{14}O_6S$	$H_2S \cdot 6H_2O$	hydrogen sulfide hexahydrate	c	-431.2			[2]
$H_{15}O_6P$	$PH_3 \cdot 6H_2O$	phosphine hexahydrate	c	-422.7			[2]
$H_{18}N_3O_7P$	$(NH_4)_3PO_4 \cdot 3H_2O$	tertiary ammonium orthophosphate trihydrate	c	-610.8			[1]
N	N	nitrogen monatomic	g	112.979	108.883	36.622	[1]
NO	NO	nitric oxide	g	21.57	20.69	50.35	[1]
NO_2	NO_2	nitrogen dioxide	g	277.4			[1]
NO_3	NO_3	nitrogen trioxide	g	13.0			[2]
NP	PN	phosphorus nitride	g	25.043	18.453	50.437	[5]
NS	SN	sulfur nitride	g	63.000	56.278	53.055	[5]
N_2	N_2	nitrogen	g	0	0	45.77	[1]
N_2O	N_2O	nitrous oxide	g	19.61	24.90	52.52	[1]
N_2O_3	N_2O_3	dinitrogen trioxide	g	20.01	33.32	74.61	[1]
			ℓ	12.02			[1]
N_2O_4	N_2O_4	nitrogen tetroxide	g	12.19	23.38	72.70	[1]
			ℓ	-4.66	23.29	50.0	[1]
N_2O_5	N_2O_5	nitrogen pentoxide	g	2.7	27.5	85.0	[1]
			c	-10.3	27.2	42.6	[1]
N_5P_3	P_3N_5	phosphorus pentanitride	c	-71.4			[1]
O	O	oxygen monatomic	g	59.555	55.388	38.467	[1]
OP	PO	phosphorus monoxide	g	-1.455	-8.391	53.219	[3]
OS	SO	sulfur monoxide	g	1.5			[1]

Table I. Selected Thermodynamic Data (Cont.)

Empirical Formula	Functional Group Formula	Name	State	ΔH^{o}_{f298} kcal mole^{-1}	ΔF^{o}_{f298} kcal mole^{-1}	S^{o}_{298} cal mole^{-1}deg^{-1}	Ref.
O_2	O_2	oxygen diatomic	g	0	0	48.996	[1]
		m=1	aq	-2.8	3.9	26.5	[1]
O_2P	P_2O	phosphorus dioxide	g	71.000	72.834	60.607	[7]
O_2S	SO_2	sulfur dioxide	g	-70.944	-71.749	59.30	[1]
			ℓ	-76.6			[1]
		undissociated, m=1	aq	-77.194	-71.872	38.7	[1]
		100 H_2O	aq	-78.054			[1]
		200 H_2O	aq	-78.355			[1]
		500 H_2O	aq	-78.811			[1]
		1000 H_2O	aq	-79.201			[1]
		2000 H_2O	aq	-79.642			[1]
		5000 H_2O	aq	-80.209			[1]
		10000 H_2O	aq	-80.584			[1]
O_3	O_3	ozone	g	34.1	39.0	57.08	[1]
O_3S	SO_3	sulfur trioxide	g	-94.21	-88.69	61.34	[1]
			ℓ	-105.41	-88.04	22.85	[1]
			c,β	-108.63	-88.19	12.5	[1]
O_6P_4	P_4O_6	phosphorus trioxide	c	-392.0			[1]
$O_{10}P_4$	P_4O_{10}	phosphorus pentoxide	c	-713.2	-644.8	54.70	[1]
			amorph	-727			[1]
P	P	phosphorus, monatomic	g			38.978	[1]
		phosphorus, white, α, c III	c	0	0	9.82	[1]
		phosphorus, red triclinic	c	-4.2	-2.9	5.45	[1]
		phosphorus, black	c	-9.4			[1]
		phosphorus, red amorphous	amorph	-1.8			[1]
PS		phosphorus sulfide	g	22.500	9.694	56.033	[5]
P_2		phosphorus, diatomic	g	34.5			[1]
P_2S_3	P_2S_3	phosphorus trisulfide	c	-19.2			[1]
P_4		phosphorus tetratomic	g	14.08	5.85	66.89	[1]
P_4S_3	P_4S_3	phosphorus sulfide	g	-19.408	-28.826	76.280	[3]
			ℓ	-36.077	-37.513	49.510	[3]
			c	-37.000	-37.986	48.000	[3]
S	S	sulfur, rhombic	c	0	0	7.60	[1]
		sulfur, monoclinic	c	0.08			[1]
		sulfur monatomic	g	66.636	56.949	40.094	[1]
S_2		sulfur diatomic	g	30.68			[1]
S_3		sulfur triatomic	g	31.7			[1]
S_4		sulfur tetratomic	g	32.7			[1]
S_5		sulfur pentatomic	g	29.6			[1]
S_6		sulfur hexatomic	g	24.5			[1]
S_7		sulfur heptatomic	g	27.1			[1]
S_8		sulfur octatomic	g	24.45	11.87	102.98	[1]

References

[1] W. H. Evans, "Selected Thermochemical Values", NBS Report 8504, 1 July 1964, pp. 164-184.

[2] F. D. Rossini, D. D. Wagman, W. H. Evans, S. Levine and I. Jaffe, "Selected Values of Chemical Thermodynamic Properties", NBS Circular 500 (U.S. Government Printing Office, Washington,, D. C. 20402 1952).

[3] JANAF Thermochemical Data, Dow Chemical Co., Midland, Mich. June 30, 1960.

[4] JANAF Thermochemical Data, Dow Chemical Co., Midland, Mich., Suppl. No. 1, March 31, 1961.

[5] JANAF Thermochemical Data, Dow Chemical Co., Midland, Mich., Suppl. No. 2, June 30, 1961.

[6] JANAF Thermochemical Data, Dow Chemical Co., Midland, Mich., Suppl. No. 6, June 30, 1962.

[7] JANAF Thermochemical Data, Dow Chemical Co., Midland, Mich., Suppl. No. 7, September 30, 1962.

[8] JANAF Thermochemical Data, Dow Chemical Co., Midland, Mich., suppl. No. 8, December 31, 1962.

[9] JANAF Thermochemical Data, Dow Chemical Co., Midland, Mich., Suppl. No. 9, March 31, 1963.

[10] JANAF Thermochemical Data, Dow Chemical Co., Midland, Mich., Suppl. No. 13, March 31, 1964.