UNPUBLISHED PRELIMINARY DATA

MASSACHUSETTS INSTITUTE OF TECHNOLOGY
RESEARCH LABORATORY OF ELECTRONICS
Cambridge, Massachusetts

Reprinted from
Quarterly Progress Report No. 75, October 15, 1964

The Research Laboratory of Electronics is an interdepartmental laboratory in which faculty members and graduate students from numerous academic departments conduct research.

The research reported in this group report was made possible in part by support extended the Massachusetts Institute of Technology, Research Laboratory of Electronics, by the JOINT SERVICES ELECTRONICS PROGRAMS (U.S. Army, U.S. Navy, and U.S. Air Force) under Contract DA36-039-AMC-03200(E).

Partial support for work in Communication Sciences is provided by the National Science Foundation (Grant GP-2495), the National Institutes of Health (Grant MH-04737-04), and the National Aeronautics and Space Administration (Grant NsG-496).

Additional support of specific projects is acknowledged in footnotes.

Reproduction in whole or in part is permitted for any purpose of the United States Government.

FACILITY FORM 602

N65 14534 (ACCESSION NUMBER)
(THRU)
56 (PAGES)
1 (CODE)
CR-60042 (NASA CR OR TMX OR AD NUMBER)
34 (CATEGORY)

GPO PRICE $
OTS PRICE(S) $

Hard copy (HC) 3.00
Microfiche (MF) .50

X. STATISTICAL COMMUNICATION THEORY*

Prof. Y. W. Lee
Prof. A. G. Bose
Prof. M. Schetzen
Prof. H. L. Van Trees
Prof. V. R. Algazi
Prof. J. D. Bruce
Prof. A. V. Oppenheim
R. Alter
A. B. Baggeroer
R. F. Bauer
A. M. Bush
L. D. Collins
T. A. Froeschle
S. Greenblatt
T. G. Kincaid
D. C. Kurtz
D. E. Nelsen
R. E. Parente
D. W. Steele

A. WORK COMPLETED

1. Oven Controller Using a Two-State Modulation System

This study has been completed by S. Greenblatt. It was submitted as a thesis in partial fulfillment of the requirements for the degree of Master of Science, Department of Electrical Engineering, M. I. T., August 1964.

A. G. Bose

2. Optimum Pre-emphasis with a Bandwidth Constraint

This study has been completed by C. J. Boardman. It was submitted as a thesis in partial fulfillment of the requirements for the degree of Master of Science, Department of Electrical Engineering, M. I. T., August 1964.

H. L. Van Trees

3. Simulation of Phase-Locked Loop Demodulators

This study has been completed by M. A. Rich. It was submitted as a thesis in partial fulfillment of the requirements for the degree of Master of Science, Department of Electrical Engineering, M. I. T., August 1964.

H. L. Van Trees

B. CHARACTERIZATION OF A CLASS OF NONLINEAR SYSTEMS

A generalization of the principle of superposition to encompass a class of nonlinear systems has been discussed previously.[1,2] A detailed investigation of this class, referred to as the class of homomorphic systems, appears in the author's doctoral thesis.[3] The inputs and outputs associated with a homomorphic system are represented as vectors in a vector space under appropriate definitions of vector addition and scalar multiplication. With this representation, the associated transformation can be interpreted as a linear transformation between

*This work was supported in part by the National Science Foundation (Grant GP-2495), the National Institutes of Health (Grant MH-04737-04), and in part by the National Aeronautics and Space Administration (Grant NsG-496).

vector spaces, thereby permitting the notation and theorems of linear algebra to be applied to the study of homomorphic systems. The investigation of homomorphic systems centered around the determination of a representation for systems in the class and a study of the generality of the class.

The class of homomorphic systems has been shown to include all invertible systems, that is, all systems for which each output has associated with it only one input. More generally, a necessary and sufficient condition for a system to be homomorphic is that the system inputs can be divided into sets with the properties that

1. Each input in a given set produces the same output and all inputs producing the same output belong to the same set.

2. The sets are the cosets in a quotient space associated with the vector space of inputs.

The application of the theory of homomorphic systems to specific areas in which nonlinear systems arise is now being studied.

A. V. Oppenheim

References

1. A. V. Oppenheim, Generalized superposition, Quarterly Progress Report No. 72, Research Laboratory of Electronics, M. I. T., January 15, 1964, pp. 176-183.

2. A. V. Oppenheim, Superposition in a class of nonlinear systems, IEEE International Convention Record Part I, March 1964, pp. 171-177.

3. A. V. Oppenheim, Superposition in a Class of Nonlinear Systems, Sc. D. Thesis, Department of Electrical Engineering, M. I. T., June 1964.

C. TRANSFORM ANALYSIS OF NONLINEAR SYSTEMS WITH SAMPLED INPUT AND OUTPUT

For continuous nonlinear systems, George[1] demonstrated a transform analysis using a multidimensional Laplace transform. This transform analysis is applicable to a wide class of nonlinear systems. Once the techniques of the method are understood, the analysis of systems of this class is straightforward. In this report we present a multidimensional z-transform and show how it may be applied to the analysis of nonlinear systems with sampled input and output. Use of this transform facilitates the analysis of nonlinear sampled data systems in the same way that the multidimensional Laplace or Fourier transforms facilitate the analysis of continuous nonlinear systems.

The use of the multidimensional z-transform in the analysis of discrete nonlinear systems has been suggested by Alper.[2]

1. Systems with Sampled Input and Output

A nonlinear system with sampled input and output is shown in Fig. X-1. The sampling interval of the input sampler is T_i and that of the output sampler is T_o. The

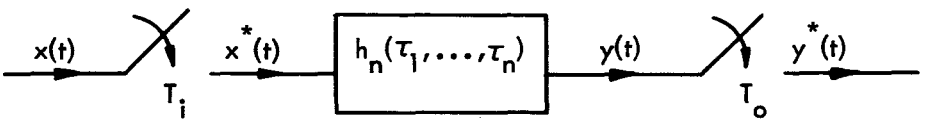

Fig. X-1. Nonlinear system with sampled input and output.

input is x(t) and the sampled input is $x^*(t)$; the output is y(t) and the sampled output is $y^*(t)$. The nonlinear system is assumed to be representable by the nth term of a Volterra series and hence is characterized by the nth degree kernel $h_n(\tau_1,\ldots,\tau_n)$. The input-output relationship of the nonlinear system is given by

$$y(t) = \int_{-\infty}^{\infty} \cdots \int_{-\infty}^{\infty} h_n(\tau_1,\ldots,\tau_n)\, x(t-\tau_1) \ldots x(t-\tau_n)\, d\tau_1 \ldots d\tau_n. \tag{1}$$

We will assume that the output of each sampler is a sequence of impulses with areas equal to the amplitude of the input to the sampler at the sampling time, so that

$$x^*(t) = \sum_{k=-\infty}^{\infty} x(kT)\, u_0(t-kT). \tag{2}$$

We will assume that $h_n(\tau_1,\ldots,\tau_n)$ contains no impulsive components. Then substitution of Eq. 2 into Eq. 1 gives for y(t)

$$y(t) = \sum_{k_n=-\infty}^{\infty} \cdots \sum_{k_1=-\infty}^{\infty} x(k_1T_i) \ldots x(k_nT_i)\, h_n(t-k_1T_i,\ldots,t-k_nT_i).$$

We will assume initially that the input and output samplers operate synchronously and with the same sampling interval $T_i = T_o = T$. Then we have for $y^*(t)$ a sequence of impulses of areas

$$y(pT) = \sum_{k_n=-\infty}^{\infty} \cdots \sum_{k_1=-\infty}^{\infty} x(k_1T) \ldots x(k_nT)\, h_n(pT-k_1T,\ldots,pT-k_nT). \tag{3}$$

We note that only the values of the kernel at isolated multidimensional sample points determine the output sample values; the remainder of the kernel is not important.

2. Multidimensional z-Transforms

The multidimensional z-transform of a function $f(\tau_1, \ldots, \tau_n)$ may be defined as

$$F(z_1, \ldots, z_n) = \sum_{k_n=-\infty}^{\infty} \cdots \sum_{k_1=-\infty}^{\infty} f(k_1T, \ldots, k_nT)\, z_1^{-k_1} \cdots z_n^{-k_n}.$$

Convergence properties and other questions of mathematical rigor will not be discussed in this report.

The sample values $f(k_1T, \ldots, k_nT)$ may be obtained from $F(z_1, \ldots, z_n)$ by expanding $F(z_1, \ldots, z_n)$ in a Taylor's series in $z_1, \ldots, z_n$. Note that the coefficients in the expansion are the sample values. If $F(z_1, \ldots, z_n)$ is a ratio of polynomials, this expansion can be carried out by division of numerator by the denominator. The sample values can also be obtained from $F(z_1, \ldots, z_n)$ by means of the integral

$$f(k_1T, \ldots, k_nT) = \left(\frac{1}{2\pi j}\right)^n \oint_{\Gamma_n} \cdots \oint_{\Gamma_1} z_1^{k_1-1} \cdots z_n^{k_n-1}\, F(z_1, \ldots, z_n)\, dz_1 \ldots dz_n$$

where Γ_i is an appropriate contour in the z_i-plane.

The z-transform has a multidimensional convolution property which makes it useful for the analysis of systems with sampled input and output. If $F(z_1, \ldots, z_n)$ is the transform of $f(\tau_1, \ldots, \tau_n)$ and $G(z_1, \ldots, z_n)$ is the transform of $g(\tau_1, \ldots, \tau_n)$, then

$$H(z_1, \ldots, z_n) = F(z_1, \ldots, z_n)\, G(z_1, \ldots, z_n)$$

is the transform of $h(\tau_1, \ldots, \tau_n)$ with sample values given by

$$h(p_1T, \ldots, p_nT) = \sum_{k_n=-\infty}^{\infty} \cdots \sum_{k_1=-\infty}^{\infty} f(k_1T, \ldots, k_nT)\, g(p_1T-k_1T, \ldots, p_nT-k_nT) \tag{4}$$

3. System Transform Relations

Although Eq. 3 is not quite a multidimensional convolution sum of the form of Eq. 4, we may make use of an artifice suggested by George for continuous systems, introducing the auxiliary function

$$y_{(n)}(p_1T, \ldots, p_nT) = \sum_{k_n=-\infty}^{\infty} \cdots \sum_{k_1=-\infty}^{\infty} x(k_1T) \ldots x(k_nT)\, h_n(p_1T-k_1T, \ldots, p_nT-k_nT)$$

We can then obtain the output sample values as

$$y(pT) = y_{(n)}(p_1T, \ldots, p_nT)\Big|_{p_1=\ldots=p_n=p}$$

Using the convolution property, the transform of the auxiliary function is given by

$$Y_{(n)}(z_1, \ldots, z_n) = H_n(z_1, \ldots, z_n)\, X(z_1) \ldots X(z_n)$$

where $H_n(z_1, \ldots, z_n)$ is the multidimensional z-transform of the system kernel, and $X(z)$ is the one-dimensional z-transform of the system input.

The one-dimensional z-transform of the output, $Y(z)$, can be obtained from $Y_{(n)}(z_1, \ldots, z_n)$ by use of the following integral.

$$Y(z) = \left(\frac{1}{2\pi j}\right)^{n-1} \oint_{\Gamma_{n-1}} \ldots \oint_{\Gamma_1} (w_1w_2\ldots w_{n-1})^{-1}\, Y_{(n)}\left(w_1, \frac{w_2}{w_1}, \ldots, \frac{z}{w_{n-1}}\right) dw_1 \ldots dw_{n-1}.$$

This procedure is analogous to the association of variables used by George for the continuous case and, as in the continuous case, can be carried out as an inspection technique for simple $Y_{(n)}(z_1, \ldots, z_n)$.

If the output sampling interval is not equal to the input sampling interval, Eq. 3 becomes

$$y(pT_o) = \sum_{k_n=-\infty}^{\infty} \ldots \sum_{k_1=-\infty}^{\infty} x(k_1T_i) \ldots x(k_nT_i)\, h_n(pT_o-k_1T_i, \ldots, pT_o-k_nT_i).$$

Let $T_i = rT_o$, where r is a positive integer. Then we have

$$y(pT_o) = \sum_{k_n=-\infty}^{\infty} \ldots \sum_{k_1=-\infty}^{\infty} x(k_1rT_o) \ldots x(k_nrT_o)\, h_n(pT_o-k_1rT_o, \ldots, pT_o-k_nrT_o).$$

Forming the auxiliary function $y_{(n)}(p_1T_o, \ldots, p_nT_o)$ and subsequently the transform $Y_{(n)}(z_1, \ldots, z_n)$ yields now

$$Y_{(n)}(z_1, \ldots, z_n) = H_n(z_1, \ldots, z_n)\, X\left(z_1^r\right) \ldots X\left(z_n^r\right).$$

To study the behavior between sampling instants, we may use a multidimensional modified z-transform. The modified z-transform of a function $f(\tau_1, \ldots, \tau_n)$ may be defined as

$$F(z_1, m_1, \ldots, z_n, m_n) = \sum_{k_n=-\infty}^{\infty} \ldots \sum_{k_1=-\infty}^{\infty} f[k_1T-(1-m_1)T, \ldots, k_nT-(1-m_nT)]\, z_1^{-k_1} \ldots z_n^{-k_n}$$

where $0 \leq m_i < 1$, $i = 1, \ldots, n$. The inverse modified z-transform and the system relations with the modified z-transform may be developed similarly.

A. M. Bush

References

1. D. A. George, Continuous Nonlinear Systems, Technical Report 355, Research Laboratory of Electronics, M. I. T., July 24, 1959.

2. P. Alper, Higher Dimensional Z-transforms and Nonlinear Discrete Systems, Electronics Laboratory, Department of Electrical Engineering, Technological University, Delft, Netherlands, September 1963.

XI. LINGUISTICS*

Prof. R. Jakobson
Prof. A. N. Chomsky
Prof. M. Halle
Prof. G. H. Matthews
Prof. J. A. Fodor
Prof. J. J. Katz
Prof. P. M. Postal
Dr. Paula Menyuk
Dr. W. Weksel
Chief Red Thunder Cloud
T. G. Bever
J. L. Fidelholtz
R. S. Glantz
J. S. Gruber
Barbara C. Hall
T. J. Kinzer III
R. P. V. Kiparsky
S.-Y. Kuroda
T. M. Lightner
P. S. Peters, Jr.
C. B. Qualls
J. R. Ross
S. A. Schane
R. J. Stanley
J. J. Viertel
A. M. Zwicky, Jr.

A. ON THE SYNTAX OF THE INTRANSITIVE VERB 'wait'

In this report we consider the verb 'wait', like the verb 'sleep', to be intransitive; we shall show, however, that the verb 'wait' is of a different nature than the verb 'sleep' even though both verbs may be used in the seemingly identical simplex constructions "she is waiting" and "she is sleeping."

The existence of sentences like "she is waiting for the train" (note the absence of *"she is sleeping for the train") suggests that "she is waiting" may be derived from an underlying "she is waiting for something" by a simple deletion; such a derivation might then be considered analogous to the derivation of "he is eating" from an underlying "he is eating something."

In spite of the initial attractiveness of this suggestion, we are obliged to reject it. In the first place, the existence of sentences like "she is waiting for the doctor" alongside "she is waiting for the train" shows that if we were to permit "she is waiting" to be derived from "she is waiting for something," we would be obliged to permit an alternative derivation from "she is waiting for someone." The existence of two underlying strings for a single terminal string suggests that the terminal string is grammatically ambiguous; the sentence "she is waiting," however, displays no grammatical ambiguity.

In the second place, sentences like "she is waiting for the train to arrive," "she is waiting for the doctor to examine her" show that the sentences "she is waiting for the train," "she is waiting for the doctor" may themselves be considered reduced forms of an underlying "she is waiting for something/someone to do something." Continued application of this argument would force one to draw the incorrect conclusion that "she is waiting" is not ambiguous in only one sense, but in many senses. We shall therefore reject this analysis and propose an analysis that accounts for all of the sentences mentioned thus far and that does not require us to consider "she is waiting" ambiguous.

We derive all of the sentences from an underlying "she is waiting COMP," where COMP underlies a full sentence and may optionally be deleted. Deletion yields "she is

*This work was supported in part by the National Science Foundation (Grant GP-2495); in part by the National Institutes of Health (Grant MH-04737-04); in part by the U.S. Air Force (Electronics Systems Division) under Contract AF19(628)-2487; and in part by the National Aeronautics and Space Administration (Grant NsG-496).

waiting." If COMP is not deleted, we require insertion of the element for and the use of an infinitival form of the main verb within the COMP. This process yields "she is waiting for the train to arrive" and "she is waiting for the doctor to examine her." If a dummy verb is used in the COMP, we derive the reduced sentences "she is waiting for the train" and "she is waiting for the doctor."

The passive transformation may apply to strings under the node COMP, thereby producing sentences like "she is waiting for John to be examined by the doctor." If the object of the verb in the COMP is the same as the subject of 'wait', and if the string under the node COMP undergoes the passive transformation, then the usual deletion of repeated elements occurs and produces "she is waiting to be examined by the doctor" and not *"she is waiting for herself to be examined by the doctor." Addition of a marker for extra-heavy stress (emphasis) may block deletion of repeated elements to derive "she is waiting for HERSELF to be examined by the doctor."

Wh-transformations may apply within the COMP, but only if the dummy verb is used. These transformations will derive sentences like "who/what is she waiting for." Note the absence of *"who is she waiting for to examine her" and *"what is she waiting for to arrive."

The Neg-transformation may apply within the COMP only when marked with extra-heavy stress, as in "she is waiting for the train NOT to arrive" and "she is waiting for the doctor NOT to examine her." For some speakers these sentences may be marginal or unacceptable.

Nominalization transformations may apply within the COMP; if the verb 'await' is used in place of 'wait', the element for does not occur: "she is waiting for the arrival of the train," "she is awaiting the arrival of the train," "she is waiting for the construction of an even larger building," "she is awaiting the construction of an even larger building," etc., but not *"she is awaiting for the arrival of the train," *"she is awaiting for the construction of an even larger building," etc.

If the verb phrase in the COMP contains an object, nominalizations produce nongrammatical sentences like *"she is (a)waiting (for) the doctor's examination of her(self)" (from "the doctor examines her"), *"she is (a)waiting (for) the winning of the Series by the Dodgers" (from "the Dodgers win the Series"), *"she is (a)waiting (for) the breaking of a window by the storm" (from "the storm breaks a window"), *"she is (a)waiting (for) his covering of the table with a cloth" (from "he covers the table with a cloth").

Note that sentences like "she is (a)waiting (for) an outstanding generative phonologist's analysis of the morphophonemic component of Russian" are not derived from the COMP "an outstanding generative phonologist analyzes the morphophonemic component of Russian," but from the COMP "an outstanding generative phonologist $VERB_{dum}$ an analysis of the morphophonemic component of Russian," as can be seen from the

existence of sentences like "she is waiting for an outstanding generative phonologist to present/to discover/to think up/ . . . an analysis of the morphophonemic component of Russian."

T. M. Lightner

B. ON THE PHONOLOGY OF tort, tolt, tert, telt IN OLD CHURCH SLAVONIC AND RUSSIAN

It is well known that the Proto-Slavic clusters *tort, *tolt, *tert, *telt developed to trat, tlat, trět, tlět in Old Church Slavonic (OCS) and to torot, tolot, teret, tolot in Russian (R). In this report, we discuss the mechanism of these two developments and show that the historical development must be reflected in the synchronic descriptions of OCS and R. We use the abbreviations C for any segment specified [+ consonantal], V for any segment specified $\begin{bmatrix} \text{+ vocalic} \\ \text{- consonantal} \end{bmatrix}$, and L for any segment specified $\begin{bmatrix} \text{+ vocalic} \\ \text{+ consonantal} \end{bmatrix}$.

The OCS development is accounted for by application of the following transformational rules:

(A) Structural Description: $\underset{X}{C}\ \underset{1}{V}\ \underbrace{\underset{}{L}\ \underset{}{C}}_{Y}$ where $V = \begin{bmatrix} \text{- diffuse} \\ \text{- tense} \end{bmatrix}$

Structural Change: $1 \rightarrow 11$

(B) SD: $\underset{1}{V}$

SC: $11 \rightarrow \begin{bmatrix} \text{+ tense} \\ 1 \end{bmatrix}$

(C) SD: $\underset{X}{C}\ \underset{1}{V}\ \underset{2}{L}\ \underset{Y}{C}$ where $V = [\text{- diffuse}]$

SC: $12 \rightarrow 21$

The development of OCS grad-ъ 'city', from the underlying root gord is thus as follows:

gord →A→ goord →B→ gōrd →C→ grōd = grad

In Russian, the development is the same, except that rule B does not apply; R gorod 'city' thus has the following development:

gord →A→ goord →C→ gorod

The synchronic descriptions of OCS and R must contain these rules in order to

account for the alternations VL ~ $L\overline{V}$ (OCS) and VL ~ VLV (R): OCS inf. klati 'to stab' and 3 sg. koljetъ 'stabs'; R inf. kolot' 'to chop' and 3 sg. kolet 'chops'. The root cluster ol in both languages undergoes the application of rules A-C in the inf. because the cluster lies before a consonant; in the pres. tense forms, however, ol does not lie before a consonant and therefore remains unaffected by rules A-C.

The gravity of lax vowels before 1C in R is accounted for by application of the following rule:

$$\text{(D)} \begin{bmatrix} +\text{ vocalic} \\ -\text{ consonantal} \\ -\text{ tense} \end{bmatrix} \rightarrow [+\text{ grave}] \qquad \text{in env: } \underline{\qquad} \ 1\ C$$

The synchronic derivation of the el cluster in R inf. molot' and 3 sg. melet 'grind', for example, is as follows (note that D must apply before A):

3 sg: mel+e+t →D→ no →A→ no = melet

Inf: mel+t' →D→ mol+t' →A→ mool+t' →C→ molo+t' = molot'

We shall now account for the existence of pairs of forms in R of the type gorod ~ grad, bereg ~ breg, molod ~ mlad, etc.[1] Each of the pairs is derived from a single underlying lexical morpheme. The difference in derivation is accounted for by marking the lexical morpheme either [+R] or [−R]. The synchronic rules, given in the order in which they must apply, are as follows:

$$\text{(D)} \begin{bmatrix} +\text{ vocalic} \\ -\text{ consonantal} \\ -\text{ tense} \end{bmatrix} \rightarrow [+\text{ grave}] \qquad \text{in env: } \begin{bmatrix} \underline{\qquad} \\ +R \end{bmatrix} 1\ C$$

$$\text{(A) SD: } \underset{X}{C}\ \underset{1}{V}\ \underbrace{\underset{}{L}\ \underset{Y}{C}} \quad \text{where} \quad V = \begin{bmatrix} -\text{ diffuse} \\ -\text{ tense} \end{bmatrix}$$

SC: 1 → 11

$$\text{(B) SD: } \begin{bmatrix} +\text{ vocalic} \\ -\text{ consonantal} \\ -\text{ R} \end{bmatrix} \quad 1$$

$$\text{SC: } 11 \rightarrow \begin{bmatrix} +\text{ tense} \\ 1 \end{bmatrix}$$

$$\text{(C) SD: } \underset{X}{C}\ \underset{1}{V}\ \underset{2}{L}\ \underset{Y}{C} \quad \text{where} \quad V = [-\text{ diffuse}]$$

SC: 12 → 21

The following are sample derivations:

gorod: $\begin{bmatrix} \text{gord} \\ +R \end{bmatrix}$ →D→ no →A→ $\begin{bmatrix} \text{goord} \\ +R \end{bmatrix}$ →B→ no →C→ gorod

grad: $\begin{bmatrix} \text{gord} \\ -R \end{bmatrix}$ →D→ no →A→ $\begin{bmatrix} \text{goord} \\ -R \end{bmatrix}$ →B→ $\begin{bmatrix} \text{gōrd} \\ -R \end{bmatrix}$ →C→ grōd = grad

moloko: $\begin{bmatrix} \text{melk+o} \\ +R \end{bmatrix}$ →D→ $\begin{bmatrix} \text{molk+o} \\ +R \end{bmatrix}$ →A→ $\begin{bmatrix} \text{moolk+o} \\ +R \end{bmatrix}$ →B→ no →C→

molok+o = moloko

mleko: $\begin{bmatrix} \text{melk+o} \\ -R \end{bmatrix}$ →D→ no →A→ $\begin{bmatrix} \text{meelk+o} \\ -R \end{bmatrix}$ →B→ mēlk+o →C→

mlēk+o = mleko

M. Halle, T. M. Lightner

References

1. The pairs of this type have been exhaustively listed by Šaxmatov, Očerk sovremennogo russkogo literaturnogo jazyka (Leningrad, 1930), pp. 21-25.

C. HISTORICAL DEVELOPMENT OF THE FRENCH SYNTACTIC CONSTRUCTION: Ce + ETRE + noun or pronoun

In this report we shall undertake to formulate a small set of transformational rules to explain the various stages in the development of the syntactic construction: ce + ETRE + noun or pronoun.

All data for the early periods of the language are taken from Foulet.[1] The forms that we cite have been normalized in accordance with current French orthography.

1. Background

We shall speak of three separate stages in order to classify the data conveniently, without being specific as to the exact point of division between these successive stages. In Stage I (XII century) one finds the following type of paradigm:

Ce suis je	Ce sommes nous
Ce es tu	Ce êtes vous
Ce est il	Ce sont ils

Here it is seen that the form of the verb is determined by the following subject; the predicate ce standing in word initial position. It should be borne in mind that all nouns and pronouns at this stage of the language were in one of two cases, the nominative or the oblique; hence, sentences of the type object-verb-subject were about as equally

common as subject-verb-object. In constructions of the type which we are examining, however, ce tended to be the preverbal element.

In Stage II (XIV century) case distinction had been lost in nouns; word order became more rigid; the first noun or pronoun was generally the subject. In the construction, Ce + ETRE + noun or pronoun, ce becomes grammatical subject, the paradigm then being

*Ce est je	Ce est nous
Ce est tu	Ce est vous
Ce est il	*Ce est ils

The forms preceded by an asterisk have never been attested. Weakened je was replaced by moi, whereas ce sont ils probably persisted for some time as a unique form.

In Stage III (Modern French) the ce est moi type of paradigm becomes generalized:

C'est moi	C'est nous
C'est toi	C'est vous
C'est lui	C'est eux

C'est eux has often been considered as colloquial. There is also the somewhat more literary alternative Ce sont eux. Also in Modern French the disjunctive form of the pronoun has replaced the conjunctive. This change will not be discussed, as it is not directly relevant to the syntactic problem as herein formulated.

2. The Data

In addition to the Ce + ETRE + pronoun construction, the third position can also be occupied by a noun; e.g., Ce est Jean (Stage I). Although the latter superficially resembles its pronoun counterpart Ce est il, structural differences are apparent when one examines the nondeclarative forms: interrogative, est il ce? : est ce Jean?; negative, ce ne est il pas : ce ne est pas Jean; negative-interrogative, ne est il pas ce? : ne est pas ce Jean? The rules of the grammar must explain differences of this sort. We append a chart summarizing the different orderings of pronouns and nouns for each stage of the language.

	Declarative	Interrogative	Negative	Neg-Interrog
I	ce es tu	es tu ce	ce ne es tu pas	ne es tu pas ce
II	ce est tu	est ce tu	ce ne est tu pas	ne est ce tu pas
III	c'est toi	est-ce toi	ce n'est pas toi	n'est-ce pas toi
I	ce est Jean	est ce Jean	ce ne est pas Jean	?ne est pas ce Jean
II	ce est Jean	est ce Jean	ce ne est pas Jean	?ne est ce pas Jean
III	c'est Jean	est-ce Jean	ce n'est pas Jean	n'est-ce pas Jean

Tu, of course, is representative of the other pronouns of the paradigms; Jean is typical

of nouns. For each stage we shall construct a different grammar to explain the facts for that stage.

3. Stage I

This stage is characterized by

1) verb is determined by the following subject;

2) ce is inverted in questions;

3) pronoun subject precedes other elements (pas and/or ce) in negation and/or interrogation;

4) noun subject follows the other elements in negation and/or interrogation.

The ? before ne est pas ce Jean indicates that this form was not given by Foulet and has been reconstructed on the basis of the other forms (which are all given by Foulet).

The following is a small segment of a phrase-structure grammar. It will produce the underlying strings for those forms noted above as data, as well as several other derivations not discussed here. These rules do not purport in any sense to be complete. They are but a fragment that would doubtlessly be changed considerably if a more complete grammar were considered. Their purpose here is therefore an illustrative one.

1. $S \rightarrow (NEG)\ (QU)\ NP\ Aux\ VP$

2. $VP \rightarrow V \left(\left\{\begin{matrix} NP \\ Pred \end{matrix}\right\}\right)\ (Adv)$

3. $V \rightarrow \left\{\begin{matrix} ETRE & \text{in env: } ____\ Pred \\ V_{trans} & \text{in env: } ____\ NP \\ V_{intrans} & \end{matrix}\right\}$

4. $Pred \rightarrow \left\{\begin{matrix} Adj \\ Loc \\ NP \end{matrix}\right\}$

5. $NP \rightarrow \left\{\begin{matrix} Pron \\ (Det)\ N \end{matrix}\right\}$

6. $Pron \rightarrow \left\{\begin{matrix} PPro & \\ ce & \text{in env: } ____\ Aux\ V \left\{\begin{matrix} Adj \\ Loc \end{matrix}\right\} \\ & \left\{\begin{matrix} N \\ PPro \end{matrix}\right\} Aux\ V\ ____ \end{matrix}\right\}$

7. $N \rightarrow \left\{\begin{matrix} N_{com} & \text{in env: } Det\ ____ \\ N_{prop} & \end{matrix}\right\}$

8. $Aux \rightarrow Tense$

9. $Tense \rightarrow \left\{\begin{matrix} pres \\ past \end{matrix}\right\}$, etc.

10. Adv $\longrightarrow$ aujourd'hui, etc.

11. V_{trans} $\longrightarrow$ regarde, etc.

12. $V_{intrans}$ $\longrightarrow$ marche, etc.

13. Adj $\longrightarrow$ brave, etc.

14. Loc $\longrightarrow$ là-bas, etc.

15. PPro $\longrightarrow$ je, tu, etc.

16. N_{com} $\longrightarrow$ garçon, etc.

17. N_{prop} $\longrightarrow$ Jean, etc.

18. Det $\longrightarrow$ le, un, etc.

From the rules above we can derive the underlying strings: Tu pres ETRE ce (Tu es ce, after subject-verb agreement and morphophonemics); Jean pres ETRE ce (Jean est ce). A sample of a derivational tree follows:

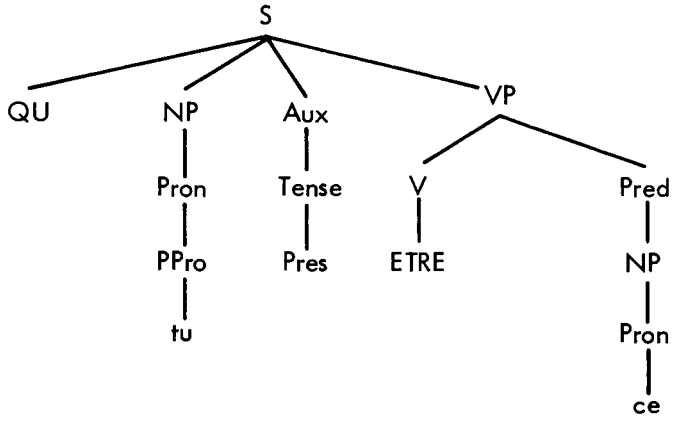

Diagram 1

We shall need, in addition, the following four transformational rules to handle those forms in question:

A) Ce-placement: NP – Aux – V – ce $\Longrightarrow$ 4 – 2 – 3 – 1

B) Inversion: QU – NP – Aux – V $\Longrightarrow$ 3+4 – 2 – 0 – 0

C) Negation: NEG – X – Tense – V $\Longrightarrow$ 0 – 2 – ne+3 – 4+pas

D) Pronoun-attraction: V – X – PPro $\Longrightarrow$ 1+3 – 2 – 0

Rule A interchanges ce and the subject; rule B inverts the subject and verbal complex (Aux – V) in interrogative forms; rule C places ne... pas around the verbal complex in negative forms; rule D places the pronoun subject immediately after the verb. Complete derivations follow. It should be noted that in the derivations verb forms are given in their orthographic representation for the convenience of the reader. These verb forms should really be interpreted as the verbal complexes (Aux – V; i.e., Pres – ETRE) noted above.

	tu es ce	QU tu es ce	NEG tu es ce	NEG QU tu es ce
A	ce es tu	QU ce es tu	NEG ce es tu	NEG QU ce es tu
B	–	es ce tu	–	NEG es ce tu
C	–	–	ce ne es pas tu	ne es pas ce tu
D	ce es tu	es tu ce	ce ne es tu pas	ne es tu pas ce
	Jean est ce	QU Jean est ce	NEG Jean est ce	NEG QU Jean est ce
A	ce est Jean	QU ce est Jean	NEG ce est Jean	NEG QU ce est Jean
B	–	est ce Jean	–	NEG est ce Jean
C	–	–	ce ne est pas Jean	ne est pas ce Jean
D	–	–	–	–

4. Stage II

The phrase structure is similar to Stage I. The proper restrictions must be set up to derive ce – Tense – ETRE – $\left\{\begin{matrix}N\\Pron\end{matrix}\right\}$ instead of $\left\{\begin{matrix}N\\Pron\end{matrix}\right\}$ – Tense – ETRE – ce (e.g., Pron ⟶ ce in env ——— Aux V Pred. This allows ce to determine the form of the verb.

No additional rules of the type A-D are needed; these are simply reordered and A), the ce-placement rule, is eliminated.

New ordering: C) Negation
D) Pronoun-attraction
B) Inversion

Complete derivations follow:

	ce est tu	QU ce est tu	NEG ce est tu	NEG QU ce est tu
C	–	–	ce ne est pas tu	QU ce ne est pas tu
D	ce est tu	QU ce est tu	ce ne est tu pas	QU ce ne est tu pas
B	–	est ce tu	–	ne est ce tu pas
	ce est Jean	QU ce est Jean	NEG ce est Jean	NEG QU ce est Jean
C	–	–	ce ne est pas Jean	QU ce ne est pas Jean
D	–	–	–	–
B	–	est ce Jean	–	ne est ce pas Jean

5. Stage III

As in Stage II, for Stage III we eliminate one of the rules B-D, reordering the remaining two:

New ordering: C) Negation
B) Inversion

Complete derivations follow:

	c'est toi	QU c'est toi	NEG c'est toi	NEG QU c'est toi
C	–	–	ce n'est pas toi	QU ce n'est pas toi
B	–	est-ce toi	–	n'est-ce pas toi
	c'est Jean	QU c'est Jean	NEG c'est Jean	NEG QU c'est Jean
C	–	–	ce n'est pas Jean	QU ce n'est pas Jean
B	–	est-ce Jean	–	n'est-ce pas Jean

It is interesting to note that for each of the stages, once the underlying string is established, the same set of rules A-D) is used to derive all forms, although the full set of rules is not necessarily used for each subsequent stage and ordering varies. Thus

Stage I	Stage II	Stage III
ce-placement	Negation	Negation
Inversion	Pronoun-attraction	Inversion
Negation	Inversion	
Pronoun-attraction		

6. Conclusion

It is seen that linguistic change is not simply the result of different grammatical rules operating at each given stage in the development of the language. Nor is it simply the addition of new rules or the elimination of other rules. There also remains to be considered the possibility of a set of rules from one stage of the language undergoing reordering in the subsequent stage. The latter factor, in addition to the others considered, accounts for the diversity in output which is observable from one stage of the language to the next.

S. A. Schane

References

1. L. Foulet, Comment on est passé de <Ce suis je> à <C'est moi>, Romania, 46-83 (1920).

XII. COGNITIVE INFORMATION PROCESSING*

Prof. S. J. Mason
Prof. M. Eden
Prof. T. S. Huang
Prof. D. E. Troxel
Prof. O. J. Tretiak
Dr. P. A. Kolers
E. L. Appel
W. L. Black
R. M. Brecker
J. K. Clemens
J. E. Cunningham
R. W. Donaldson
J. K. Dupress
D. N. Graham
M. C. Harrison
K. R. Ingham
E. E. Landsman
R. A. Murphy
L. C. Ng
J. A. Rupf
N. D. Strahm
D. E. Thornhill

A. COGNITIVE PROCESSES

1. BILINGUAL FACILITATION OF SHORT-TERM MEMORY

The phenomenon of bilingualism provides an interesting opportunity to study the way information is organized, stored and retrieved – in effect, what a nervous system does to its informational inputs – for with bilingual individuals the information is all within one head. One can present to the fluent bilingual person information in one of his languages and test for it in the other, noting in the meantime how it is maintained, transformed, or degraded. One can also inquire into the nature of the coding processes that human subjects use to define the environment to themselves linguistically: What "unit" is the basis of the information encoded? In some cases, information appears to be tied directly to the words with which it is encoded,[1] in such a fashion that the information varies with particular linguistic forms; but in other cases, the information seems to exist in the subject's head relatively independently of the language used for encoding it.

Consider, for example, the difference between a culturally defined proverb on the one hand, and the laws of physics on the other. Proverbs are notoriously difficult to translate, and in many cases their particular import seems to be tied to their linguistic form. Information of a more universally applicable kind, however, may be more nearly independent of its linguistic form. In such cases, one may believe, it is some property such as a relation or other abstraction that exists in the mind.

Let a human subject see a list of words which he is subsequently required to recall. What processes does he go through to encode the words, store them, and retrieve them subsequently? Some psychologists believe that it is the words themselves that are processed and retained directly; others believe that the words set up some set of associations or images; and others believe still other things. A particular phenomenon relating the availability of items for subsequent recall to their frequency of presentation provided a means for making a test of this question.

The probability of recalling some word from a serially presented list of unconnected

*This work was supported in part by the National Science Foundation (Grant GP-2495), the National Institutes of Health (Grant MH-04737-04), and the National Aeronautics and Space Administration (Grant NsG-496).

words varies with its frequency of occurrence within the list; the more frequent its occurrence, the greater the likelihood of its subsequent recall. In a long list, however, the items heading and ending the list are more frequently recalled than the items from the interior, a serial position effect. But if the items from the first and last 10 positions on the list are excluded from the scoring, the probability of recalling the remaining items is found to increase linearly with an increase in their frequency of presentation: a word presented four times in the list is twice as likely to be recalled as a word presented twice. The question that we were concerned with is whether this facilitory effect of repetition upon recall occurs interlingually. Is the probability of recalling some word presented n times on a list the same or different from the probability of recalling it when the word and its translation are each presented n/2 times to a bilingual subject?

Two kinds of lists were prepared. One, the nontranslated (NT), contained English and French words whose frequency of occurrence varied from one to four in lists 120 items long. In the other, translated lists (T), English-French pairs of words were presented from one to four times each, distributed in random fashion. The subjects observed 10 lists of each kind, one list at a time, and wrote down all of the items from a list they were able to recall immediately after it was terminated.

The principal result is shown in Fig. XII-1, where the proportion of words recalled from the various lists is shown on the vertical axis as a function of the frequency with which items were presented. An abscissa value of 4 means that an English or a French

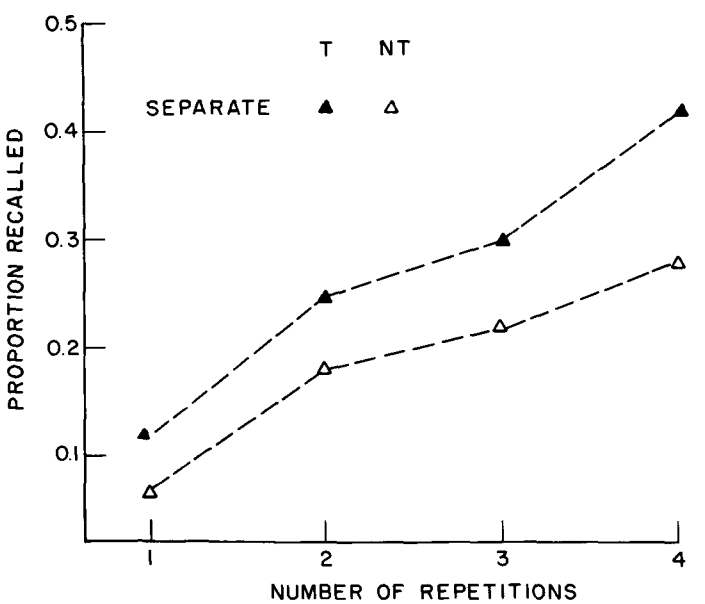

Fig. XII-1. Results of experiment.

word was presented 4 times in the list. For the NT words, these are simple frequencies; for the T words, however, the abscissa means that the word was presented that many times in each of the two languages. The figure averages performance across languages, lists, and subjects. It shows that the probability of recalling some item increases with its frequency of presentation, and that the probability of recalling an item in English, for example, is twice as great when its translation in French also appears in the list as when the item alone appears.

The results can be illustrated more concretely. They indicate that presenting a French-English bilingual with two words, say, wheat and blé, for example, has the same effect upon his recall of either of them as presenting either one twice. One might think from this that the subjects were merely translating the words presented to them, thus supplying themselves with the double stimulation translation provides. This is not a reasonable assumption, however, for the words appeared at the rate of one per second, too fast for this to have occurred. Furthermore, in a control experiment, we found that the subjects did just as well with lists made up of some translated and some non-translated pairs as they did with translated pairs only, and that the false-alarm rate of mistranslation was nearly zero.

The conclusion that we draw from these results is that it is not words themselves that are encoded when a subject is presented a long unconnected list. Rather, their referential property, the "concepts" they represent, are perceived and stored. Words such as blé and wheat are neither visually nor phonetically similar; the fact that presenting either of them facilitates the subsequent recall of the other must be due to their conceptual identity, and it is in terms of such conceptual identities that the words appear to be perceived.

P. A. Kolers

References

1. P. A. Kolers, Interlingual word associations, J. Verb. Learn. Verb. Behav. 2, 291-300 (1963).

B. PICTURE PROCESSING

1. TWO-DIMENSIONAL SYNTHESIS OF HIGH SPATIAL FREQUENCIES IN PICTURE PROCESSING*

This research is an extension of the work done by J. W. Pan[1] as suggested by W. F. Schreiber.[2] A block diagram of the proposed system of image transmission is

*Part of this work was carried out with the use of the facilities of the IBM 7094 computer at the Computation Center, M. I. T.

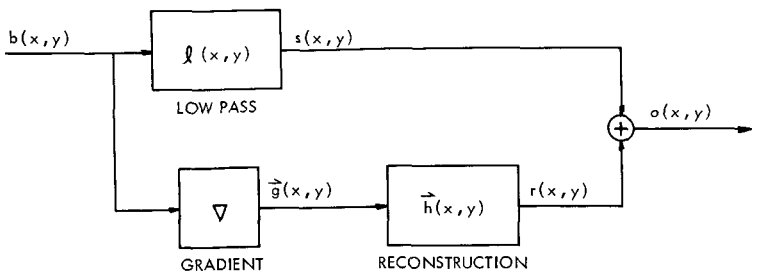

Fig. XII-2. Image transmission system.

shown in Fig. XII-2.

The original picture b(x, y), considered as a signal representing a two-dimensional spatial distribution of brightness, is passed through a lowpass spatial filter l(x, y), and an out-of-focus "lows" signal s(x, y) is produced. The gradient signal of the picture $\vec{g}(x,y)$ is a vector having two components $\frac{\partial b}{\partial x}$ and $\frac{\partial b}{\partial y}$. These are convolved with the reconstruction filter $\vec{h}(x,y)$ to produce the "highs" signal r(x, y). The sum of the "lows" and the "highs" yields the output 0(x, y). Schreiber showed that for a radially symmetric lowpass filter $\ell(r)$, the optimum reconstruction filter is

$$\vec{h}(r) = \frac{1}{2\pi r}\left(1 - 2\pi \int_0^r \ell(r)\, r\, dr\right)\hat{r},$$

where $\hat{r}$ is the unit vector in the r-direction.

For a normalized Gaussian lowpass filter,

$$\ell(r) = \frac{1}{2\pi\sigma^2}\exp\left(-\frac{r^2}{2\sigma^2}\right)$$

$$\vec{h}(r) = \frac{\exp\left(-\frac{r^2}{2\sigma^2}\right)}{2\pi r}\hat{r}.$$

This can be broken down into components

$$h_x = h\cos\theta \qquad h_y = h\sin\theta$$

and convolved with the x and y components of the gradient, respectively.

Since the spread of $\vec{h}$ is less than the spread of $\ell(r)$, an error in transmission will not propagate. Also, an error will be less noticeable because the value of r(x, y) at a given point is a function of the gradient at many surrounding points.

The system shown in Fig. XII-2 was simulated by using the digital television equipment built by our group[3] and the IBM 7094 computer at the M. I. T. Computation Center.

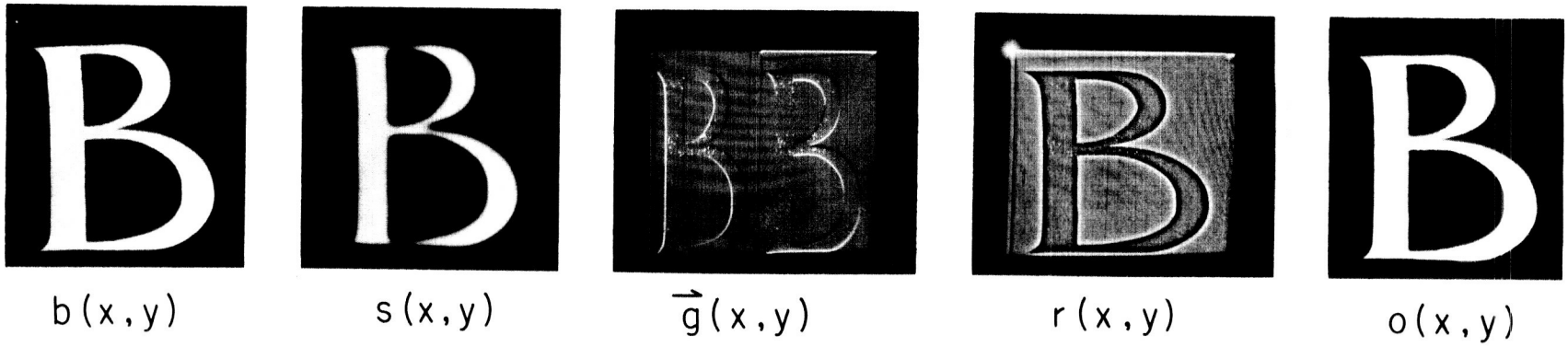

Fig. XII-3. Simulation results.

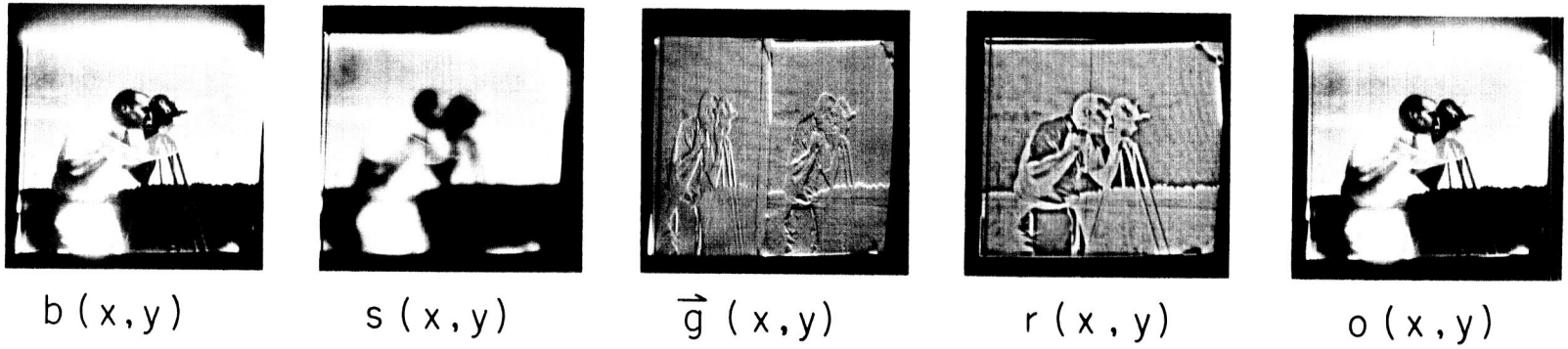

Fig. XII-4. Simulation results.

The results for a Gaussian filter with a sigma of four samples or a spread of approximately 10 percent of the picture height are shown in Figs. XII-3 and XII-4.

In the pictures of $\vec{g}(x,y)$ and $r(x,y)$, zero is represented by the center brightness level, with a negative being darker and a positive being brighter. In $\vec{g}(x,y)$ the horizontal component is on the left and the vertical component on the right.

The quality of the output pictures speaks for the validity of the theory. The research that remains to be completed is to find what nonlinear operations can be performed on $\vec{g}(x,y)$ before transmission so as to reduce the number of bits to be transmitted without seriously affecting the subjective quality of the output picture, noise discrimination, and the optimum choice for the spatial cutoff frequency of $\ell(x,y)$. Since much of the subjectively important gradient information lies along contours in the picture, as is evident in $\vec{g}(x,y)$, fitting conic sections to the contours and then transmitting the parameters of these curves is one way to make use of the two-dimensional nature of the picture.

D. N. Graham

References

1. J. W. Pan, Picture processing, Quarterly Progress Report No. 61, Research Laboratory of Electronics, M. I. T., July 15, 1962, p. 229.

2. W. F. Schreiber, The mathematical foundation of the synthetic highs system, Quarterly Progress Report No. 68, Research Laboratory of Electronics, M. I. T., January 15, 1963, p. 140.

3. J. W. Pan, U. F. Gronemann, T. S. Huang, J. E. Cunningham, and W. F. Schreiber, Picture Processing Research, Quarterly Progress Report No. 61, Research Laboratory of Electronics, M. I. T., April 15, 1961, p. 133.

2. MINIMIZATION OF COINCIDENCE TIME

In this report we solve a simple mathematical problem that has application to space communication. Consider a periodic pulse train with pulse duration τ, period d, and

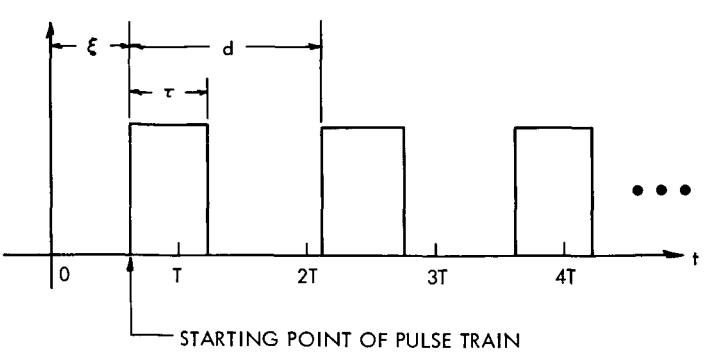

Fig. XII-5.

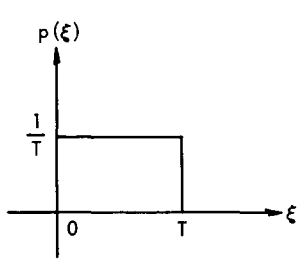

Fig. XII-6.

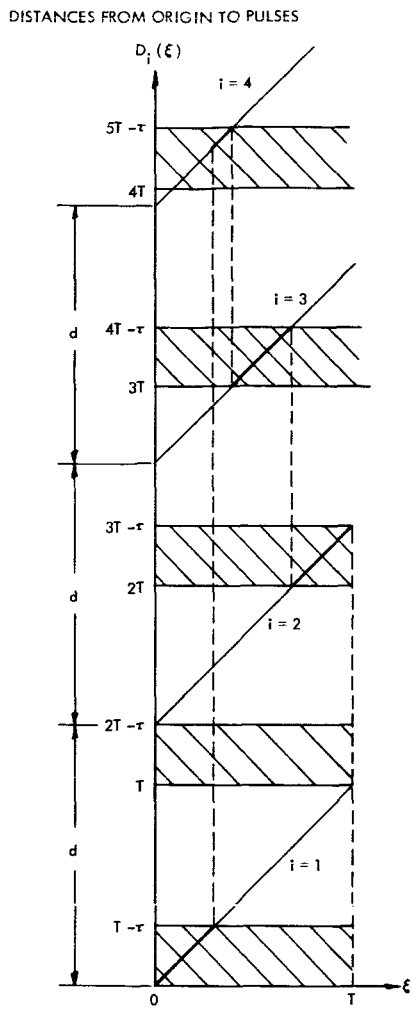

Fig. XII-7.

starting point ξ (Fig. XII-5), where τ and d are constants, and ξ is a random variable uniformly distributed between 0 and some constant T (Fig. XII-6). Assume that $\tau \leq T$ and $(n-1)T \leq d \leq nT$, where n is a positive integer and $n \geq 2$. Let N be the smallest integer having the property that the interval $[(N-1)T, NT]$ contains a complete pulse. We use E(N) to denote the expected value of the random variable N. The problem can be stated: Assume that τ, T, and n are fixed. Find values of d, subject to the inequality $(n-1)T \leq d \leq nT$, which minimize E(N) and $\max_{0 \leq \xi \leq T} N$. We claim that the choice $d = nT - \tau$ will minimize both quantities.

We shall prove our claim only for the case $n = 2$; the proof for the general case is similar. We plot the distances from the origin to the leading edges of the pulses against ξ (Fig. XII-7). The distance from the origin to the leading edge of the ith pulse is

$$D_i(\xi) = (i-1)d + \xi; \qquad 0 \leq \xi \leq T. \tag{1}$$

Let k be a positive integer. Then, for a particular value of ξ the ith pulse lies completely in the interval $[(k-1)T, kT]$, if and only if

$$(k-1)T \leq D_i(\xi) \leq kT - \tau. \tag{2}$$

We use S_k^i to denote the set of ξ which satisfies (2). Clearly, this set is a closed interval. If S is a union of nonoverlapping intervals containing points in $[0, T]$, we define

$\bar{S}$ = the complement of S with respect to $[0, T]$

and

L(S) = the sum of the lengths of the nonoverlapping intervals in S.

We recall that ξ is uniformly distributed between 0 and T. Therefore, by inspection of Fig. XII-7 it is clear that for any value of d satisfying the inequality $T \leq d \leq 2T$, we have

$$\Pr\{N=k\} = \frac{L(S_k)}{T}, \tag{3}$$

where k is any positive integer, and

$$S_1 = S_1^1 = T - \tau \tag{4}$$

$$S_2 = S_2^2 \cap \bar{S}_1 = 0 \tag{5}$$

and

$$S_k = S_k^{k-1} \cap \left(\bigcap_{j=1}^{k-1} \bar{S}_j\right); \qquad \text{for } k \geqslant 3. \tag{6}$$

By definition,

$$E(N) = \sum_{k=1}^{\infty} k \cdot \Pr\{N=k\}. \tag{7}$$

For any d satisfying the inequality $T \leqslant d \leqslant 2T$,

$$\Pr\{N=1\} = \frac{T-\tau}{T} \tag{8}$$

$$\Pr\{N=2\} = 0 \tag{9}$$

and

$$\Pr\{N=k\} = \frac{L(S_k)}{T} \leqslant \frac{L\left(S_k^{k-1}\right)}{T} \leqslant \frac{T-\tau}{T}; \qquad \text{for } k \geqslant 3. \tag{10}$$

Also, obviously,

$$\sum_{k=1}^{\infty} \Pr\{N=k\} = 1. \tag{11}$$

We want to minimize (7) under the conditions (8)-(11). In Fig. XII-7 we have used $d = 2T - \tau$. For this choice of d, we have

$$\Pr\{N=k\} = \begin{cases} \dfrac{T-\tau}{T}, & \text{for } 3 \leqslant k \leqslant \left[\dfrac{T}{T-\tau}\right] + 1 \\[2ex] 1 - \left[\dfrac{T}{T-\tau}\right] \dfrac{T-\tau}{T} < \dfrac{T-\tau}{T}, & \text{for } k = \left[\dfrac{T}{T-\tau}\right] + 2 \\[2ex] 0, & \text{for } k \geqslant \left[\dfrac{T}{T-\tau}\right] + 3 \end{cases} \tag{12}$$

where $\left[\dfrac{T}{T-\tau}\right]$ = the largest integer in $\dfrac{T}{T-\tau}$. It should be clear that this set of probabilities when substituted in (7) yields the desired minimum. And

$$\min_{T \leqslant d \leqslant 2T} E(N) = \frac{T-\tau}{T}\left(1 + \left\{3+4+\ldots+\left(\left[\frac{T}{T-\tau}\right]+1\right)\right\}\right) + \left(\left[\frac{T}{T-\tau}\right]+2\right)\left(1-\left[\frac{T}{T-\tau}\right]\frac{T-\tau}{T}\right) \tag{13}$$

Also, for this particular choice of $d = 2T - \tau$, we have

$$\max_{0\leq\xi\leq T} N = \begin{cases} \left[\frac{T}{T-\tau}\right] + 1, & \text{if } \frac{T}{T-\tau} = \text{integer} \\ \left[\frac{T}{T-\tau}\right] + 2, & \text{if } \frac{T}{T-\tau} \neq \text{integer} \end{cases}$$

For $d = 2T - \tau$ the probabilities $\Pr\{N=k\}$, $k \leq \left[\frac{T}{T-\tau}\right] + 1$ have attained their largest possible values; hence, it follows that no matter how we vary d, the quantity $\max_{0\leq\xi\leq T} N$ can never be made less than (14).

Similar reasoning will establish that, of all values of d satisfying the inequality $(n-1)T \leq d \leq nT$, the choice $d = nT - \tau$ minimizes both E(N) and $\max_{0\leq\xi\leq T} N$. Thus

$$\min_{(n-1)T\leq d\leq nT} E(N) = \frac{T-\tau}{T}\left(1+(n-1)\left\{3+4+\ldots+\left(\left[\frac{T}{T-\tau}\right]+1\right)\right\}\right) + (n-1)\left(\left[\frac{T}{T-\tau}\right]+2\right) \times\left(1-\left[\frac{T}{T-\tau}\right]\frac{T-\tau}{T}\right) \tag{15}$$

and

$$\min_{(n-1)T\leq d\leq nT}\left\{\max_{0\leq\xi\leq T} N\right\} = \begin{cases} (n-1)\left[\frac{T}{T-\tau}\right] + 1, & \text{if } \frac{T}{T-\tau} = \text{integer} \\ (n-2)\left(\left[\frac{T}{T-\tau}\right]+1\right) + 1, & \text{if } \frac{T}{T-\tau} \neq \text{integer.} \end{cases}$$

T. S. Huang

3. A PROPERTY OF R, ±C NETWORKS

It is well known that if Z(s) is the driving-point impedance of an RC network, then Re$Z(jw)$ is monotone nonincreasing for positive w. As far as we are aware, nowhere has it been mentioned that $|Z(jw)|$ has the same property. In fact, it can be easily shown that the magnitude of the driving-point impedance of an R, ±C network is monotone decreasing for positive w. This property follows readily from the following lemma which has been proved by Bello[1] and by Kinariwala[2].

LEMMA. If Z(s) is the driving-point impedance of an R, ±C network, then the poles and zeros of $sZ(s)$ are simple and alternating on the real axis.

THEOREM 1. If Z(s) is the driving-point impedance of an R, ±C network, then $|Z(jw)|$ is monotone decreasing for positive w, unless Z(s) is a constant.

PROOF. From the lemma, we know that the pole-zero plot of Z(s) has the general appearance of Fig. XII-8. Therefore we can always express Z(s) as a product, each factor of which contains one pole and one zero with the pole nearer to the j-axis than the zero which may be at infinity. It can be shown that for s=jw, the magnitude of each such

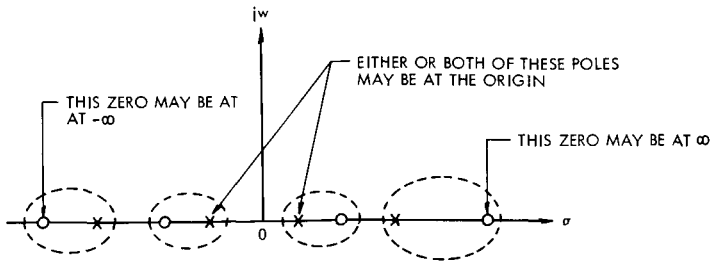

Fig. XII-8. Pole-zero plot of an R, ±C driving-point impedance.

factor is a monotone decreasing function of w for positive w; hence, the same is true of Z(s). Q. E. D.

Similar arguments will establish the following theorem.

THEOREM 2. If Z(s) is the driving-point impedance of an R, ±L network, then $|Z(jw)|$ is monotone increasing for positive w, unless Z(s) is a constant.

T. S. Huang

References

1. P. Bello, Extension of Brune's energy function approach to the study of LLF networks, IRE Trans. Vol. CT-7-3, pp. 270-280, September 1960.

2. B. K. Kinariwala, Necessary and sufficient conditions for the existence of ±R, C networks, IRE Trans. Vol. CT-7-3, pp. 330-335, September 1960.

C. SENSORY AIDS

1. TWO-DIMENSIONAL ACOUSTIC PATTERN PRESENTATION

This report summarizes work that has been discussed in more detail in the author's Sc. D. thesis. The thesis was concerned with the design, construction, and evaluation of a device for displaying acoustically the two-dimensional motion of a point in a plane.

The input to the display is a pencil-like probe that is movable on a square writing surface. The output, presented to the subject through earphones, sounds like a tone localized in space. The horizontal coordinate of the probe governs the apparent left-right position of the tone, and the vertical coordinate governs the pitch of the tone. A block diagram of the system is shown in Fig. XII-9.

Since broad-spectrum sounds such as noise can be more precisely localized than pure tones, pulse trains with low repetition rates and narrow pulses are used in the display. Such a "comb" signal has strong harmonics throughout the audible range.

The pitch of the output is varied by varying the pulse repetition rate. Equal vertical probe motions produce equal changes in pitch along the musical equal-tempered scale. The pitch range is two octaves from 100 cps to 400 cps. The choice of 24 semitones was influenced by a desire to keep the vertical and horizontal resolutions approximately

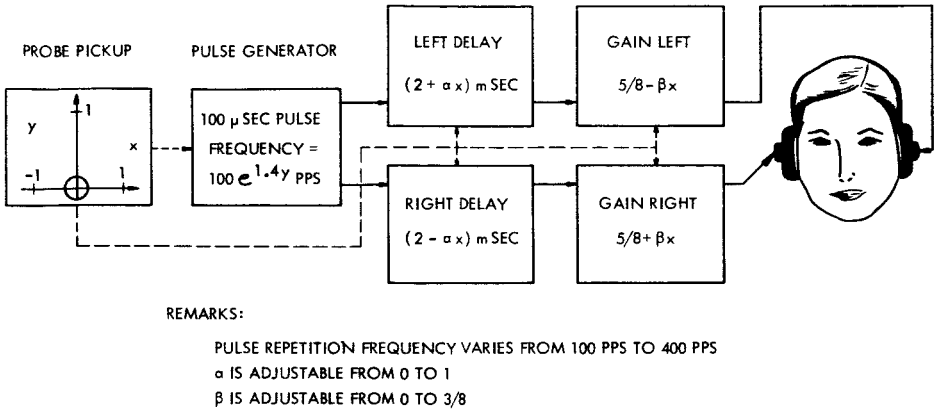

Fig. XII-9. System diagram.

equal. At frequencies lower than 100 cps it is difficult to follow fast motions.

In order to take advantage of both of the mechanisms that humans use for localization, the display employs both delay and amplitude modulation of the two earphone signals.

For pure tones of equal amplitude, relative delay produces a nearly linear change in angular position until the delay reaches the Hornbostel-Wertheimer constant, k. For larger delays the apparent source continues moving around the head, but also moves away. Delays in excess of 2k give the effect of two sources, one in each ear. The constant k depends on loudness and varies from subject to subject, but it is usually between 0.5 msec and 1 msec. Although these data were obtained with pure tones, I thought it reasonable to assume that the effects of delay on pulse trains would be similar. Thus I made the relative delay of the pulse trains to the two ears vary linearly with probe horizontal position. The maximum delay is 2 msec.

Not much is known about the effect of relative amplitude variations on the apparent position of complex sounds. Measurements in the meatus show, however, that relative intensities for real sound sources at various angles and frequencies do not exceed 10-15 db. The display produces a current ratio of 4 (or an intensity ratio of 12 db) when the probe is in an extreme horizontal position. As can be seen in Fig. XII-9 amplitude of the output pulse train is linear with horizontal position. Although this produces an apparent dip in loudness in the center, it was chosen for convenience of instrumentation and for lack of any better alternative.

The earphones are enclosed in baffles that keep external noise from disturbing the subject.

Experiments were designed to investigate the subject's ability to follow small motions, to follow fast motions, to make absolute judgments of position, and to read handwritten letters. A short description which is designed to give the flavor of the experiments that were performed and to indicate their results will be presented here.

In one experiment the experimenter moved the probe from point to point along a grid drawn on the input board. The subject was asked to track the motion of the probe with a pencil on an identical grid. Naturally, the subject could not see the experimenter's motions. Grids of varying degrees of fineness were employed.

In a second experiment the probe traced out circles, and the subject was requested to determine whether the circles were clockwise or counterclockwise. The circles varied in size and position in the writing plane. The velocity of the probe motion was also varied.

In a third experiment the probe, originally in the center of the square writing surface, jumped discontinuously to a new position. The subject indicated where he thought this new position was.

The last experiments involved handwritten letters. The experimenter wrote a single script letter with the probe. The subject tried to guess what it was. Parameters of interest were speed and accuracy.

The results of the experiments can be roughly summarized as follows:

1. The smallest resolvable detail is approximately 1/16 of the side of the writing area.

2. Absolute judgments of position are, at best, accurate within 1/8 of the side of the writing area.

3. Motion with "bandwidth" in excess of 3 cps cannot be followed.

4. Handwritten letters can be read with high accuracy up to 20 letters per minute.

5. The coding is so natural that with no training subjects can read up to 3 letters per minute with fair accuracy. (Eight hours of practice are required to reach the 20 letter per minute level.)

6. If only the vertical component of the letters is transmitted, the error rate does not increase greatly.

W. L. Black

2. TIME EXPANSION OF ULTRASONIC ECHOES AS A DISPLAY METHOD IN ECHOLOCATION

1. Introduction

A useful mobility aid for the blind should provide at least three types of information. It should indicate the presence of obstacles in the traveler's path, locate these obstacles, and identify them. Statements of blind individuals indicate that, although fear of injury from collisions or falls overshadows all else, the major difficulty in foot travel is in maintaining general orientation in walking a straight line and in finding and identifying familiar objects.[1] Many mobility-aid devices constructed in the past, while detecting and locating obstacles, have failed to provide useful identification information, or have

provided it at a very slow rate.

Several mobility-aid devices have been constructed that emit ultrasonic sound energy and detect returning echoes. These devices have been able to detect most obstacles that are of interest to a blind traveler (with the very important exception of a step-down) and to provide useful obstacle location information. These devices, however, have given only minimal object-identity information to the user. A display that retains the proved detection and range capabilities of previous ultrasonic mobility aids while giving obstacle-identity information is needed.

Since ultrasonic sound is inaudible, the information provided by ultrasonic echoes must be processed in some manner before it can be displayed to a human observer. A possible display method is to record the ultrasonic echoes and then have an observer listen to the time expansion of the recording. Experiments have been performed that explore the object-identity capabilities of this display method.[2]

2. Experiments

An acoustic radiator that produced a 1-msec, 40-kc/sec sinusoidal pulse was used as an ultrasonic sound source in this experiment. Preliminary work by the author had indicated that the time expansion of this type of signal might provide useful object-identity information. The echoes produced by the sound source from 4 objects were recorded on magnetic tape. It was felt that four was a number of echoes that subjects could be expected to remember after a very short learning period. The objects chosen were a bush, a stool, a person, and a wastepaper basket. These objects are items that a blind person may wish to identify for purposes of orientation and convenience. In this sense they are practical objects. Also, the objects have rather different geometric outlines and a useful device for object-identity purposes would certainly be expected to distinguish among them.

A recording for each object was made of the echo produced when the object was 4 ft from the sound source and the sound source axis was pointed directly at the object. Two subjects with sight listened to a time expansion of these echoes. A time-expansion factor of 64 was used because preliminary work by the experimenter had indicated that this ratio would be an interesting one to investigate. A higher factor seemed to draw out the echoes excessively, and lower factors did not seem to give as much character to the echoes. The subjects were told the name of an object and then heard its echo played fifteen times. This was done for each object and the sequence of four was repeated twice. The subjects were then given a series of 20 trials in which one of the 4 echoes was heard 5 times during a trial.

The use of the proposed echo-identity scheme will be considerably complicated in practice by the facts that all obstacles will not be 4 ft away and that an obstacle may be approached from a variety of angles. In order to find out whether a person might be able

an object under varying circumstances, an experiment was performed by using echoes that had been recorded under different conditions of source-object distance and orientation than those used in the preceding experiment. Eleven echoes were used, and 22 trials were given to the subjects. The echoes appeared in two random sequences of 11 each, so that each echo appeared once within a sequence. The subjects were asked to identify the object producing the echo on each trial by comparing what they heard with the four "standard" echoes of the first test. The subjects' combined score was 64 per cent correct. Considering the subjects' lack of training and the artificial nature of the tests, this result is most encouraging. It suggests that the proposed display method may indeed be a useful way to give obstacle-identity information to a blind traveler.

Tests of the kind just described were also performed with expansion factors of 32, 16, and 8. The factor of 32 gave scores comparable to those obtained with a factor of 64, while factors of 16 and 8 gave scores that were little better than would be expected from guessing. The last two rates may require a longer period of learning than the higher rates.

J. A. Rupf

References

1. K. S. Lashley, Psychological Problems in the Development of Instrumental Aids for the Blind, Blindness, P. A. Zahl (ed.) (Princeton University Press, Princeton, N.J., 1950), Chapter 31.

2. J. A. Rupf, The Expansion of Ultrasonic Echoes as a Display Method in Echolocation, E.E. Thesis, Department of Electrical Engineering, M.I.T., September 1964.

3. COMPUTER-AIDED SIMULATION OF A MOBILITY AID

For echolocation the short wavelengths of ultrasonic sound offer considerable advantages over the relatively long wavelengths of audible sound. Ultrasonic echoes, however, require processing before a person can use the information that they provide. A possible display method involves recording and subsequent time expansion of the echoes.

The TX-0 computer has been used to control the emission of 40-kc/sec, 1-msec pulses from an acoustic radiator, as will as to accomplish the time expansion of the received echoes. (See Fig. XII-10.) An external pulse from the computer triggered a sound source and started an analog-to-digital converter that sampled the source pulse and returning echoes at a rate of 33 kc/sec. The pulse also gated the sampled data into the live register of the computer. A sampling rate of 33 kc/sec was achieved by using only the six most significant bits of the analog-to-digital converter and poking 3 samples into an 18-bit TX-0 word. The computer then gated the sampled data to a digital-to-analog converter at a rate of 2.1 kc/sec for 0.5 second. This signal was then amplified and fed

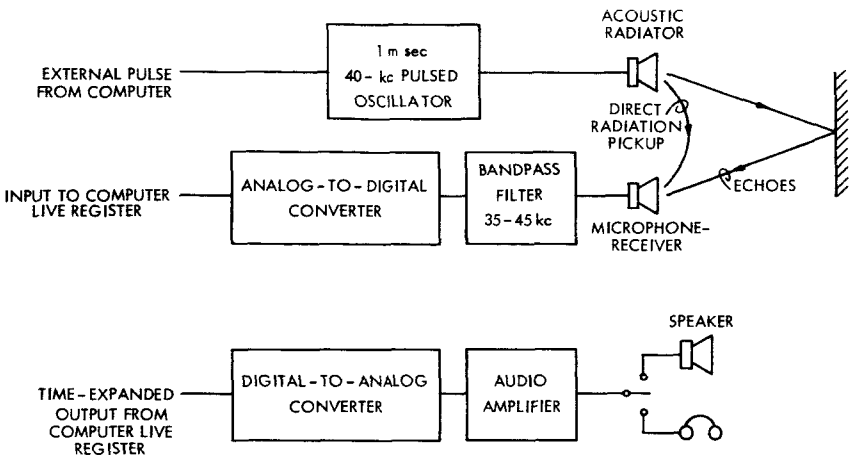

Fig. XII-10. Block diagram of the system.

to a speaker, or to earphones. After completion of the read-out, the cycle was automatically repeated by the computer. Although the sampling rate was only 0.8 sample per carrier cycle, it was sufficient to detect and store an indication of the presence and position of echoes.

The time delay between the onset of the sound source and the returned echo was lengthened by a factor of 16. A subject could then interpret this time delay as the distance to the nearest obstacle. Preliminary experiments indicated that this method of presentation of range information can be easily interpreted by a subject who has had a small amount of training.

J. J. Currano, G. Y. Gill, J. A. Rupf

4. ELECTROMECHANICAL PATTERN SIMULATOR

A device that is capable of representing patterns by means of protruding pins (probes), has been designed and tested. The chief advantage of this device lies in the fact that a large number of probes can be controlled independently by a feasible number of electrical inputs. For example, a square array of probes, 100 × 100, could be controlled by 400 electrical inputs. This is in contrast to a device in which each probe is operated by a single solenoid. The number of inputs needed in this case would be 10,000.

This economy of inputs is achieved by a control process that is similar to the procedure used for "setting" cores in a core memory. Principal components of this control scheme are ferromagnetic iron plates, around which coils are wound in crisscross fashion. A plate for a four-probe model is shown in Fig. XII-11, with the position of the probes and the coils indicated.

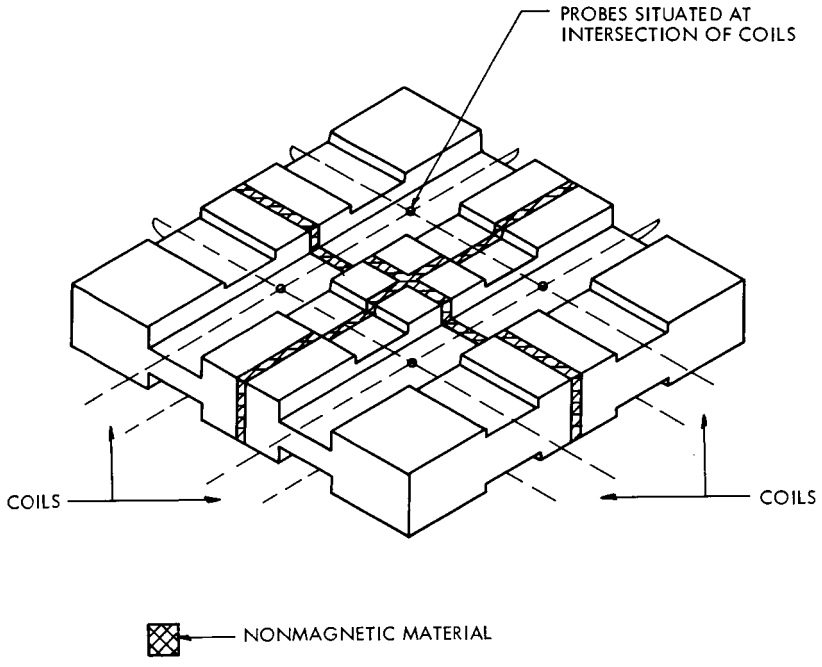

Fig. XII-11. Top (or bottom) plate.

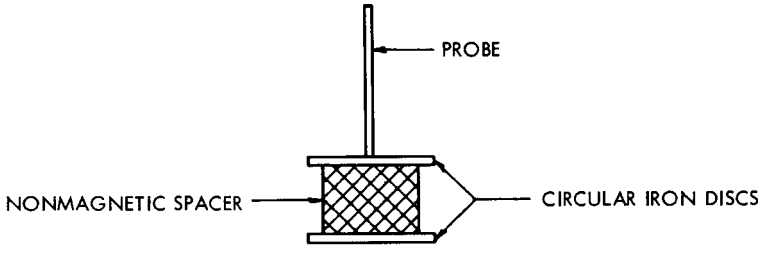

Fig. XII-12. Disc assembly.

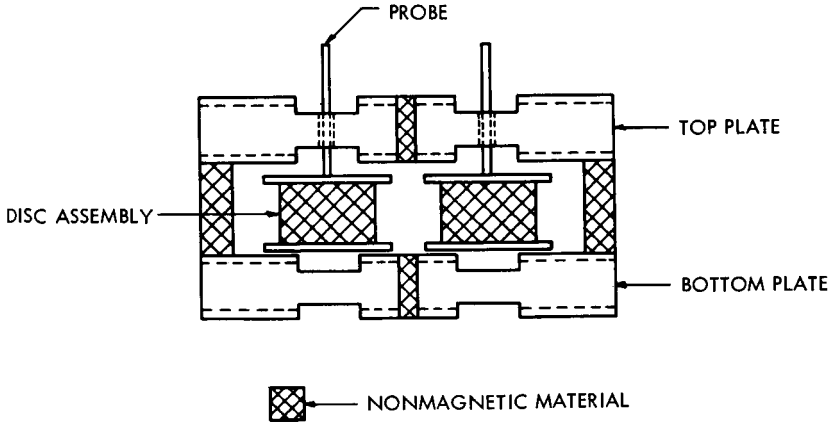

Fig. XII-13. Side view of the assembled device.

The probes are attached to two circular iron discs separated by a nonmagnetic spacer. This is shown in Fig. XII-12.

A side view showing the various parts as they fit together is shown in Fig. XII-13.

When a particular pattern is being utilized, all coils on both the top and bottom plates are excited. Under these conditions, magnetic force is exerted upon a disc assembly by both top and bottom plates. The plate that is closer to the disc assembly will attract it more, however, and hence the position of the disc assembly is bistable.

To change the position of a disc assembly, appropriate coils are de-energized in the appropriate plates. If a disc assembly that is down is to be raised, the excitation upon both of the intersecting coils on the bottom plate corresponding to the probe is removed, and the attraction of the upper plate will draw the disc assembly up. Lowering of a pin involves the inverse of this process. A disc assembly will only react when both of the coils at its intersection are rendered unexcited. If only one coil at an intersection is rendered unexcited, the mmf of the other coil will be sufficient to hold the disc assembly in place. Thus, independent control of each pin can be achieved.

Characteristics and design considerations of this device are dealt with in the Master's thesis upon which this report is based.[1]

R. A. Murphy

References

1. R. A. Murphy, An Electromechanical Pattern Simulator, S. M. Thesis, Department of Electrical Engineering, M. I. T., September 1964.

5. PICTURE BRAILLER

An electromechanical device, the picture Brailler, which in conjunction with an X-Y recorder, is capable of reproducing line drawings in Braille, has been designed, developed, and evaluated. The device is intended to produce pictures of variable size on a standard 11 × 11 inch Braille sheet. A Braille picture is a representation by a pattern of dots of an ordinary picture. The motions of the device are discrete, and a grid of 100 × 100 (9 dots per inch) is obtained on the Braille sheet. Scale reproductions (either enlarged or diminished) of line drawings are possible; in addition, the aspect ratio of the picture can be altered.

This is believed to be the first attempt at mechanized reproduction of ordinary pictures in Braille, which had hitherto been laboriously done by hand. This opens up the possibility, aside from the obvious convenience in producing Braille pictures, of further experiments in pattern recognition for blind subjects.

In principle of operation, the picture Brailler is rather similar to the IBM electric typewriter. A rotatable drum, 10 inches long and 5 inches in diameter, mounted on

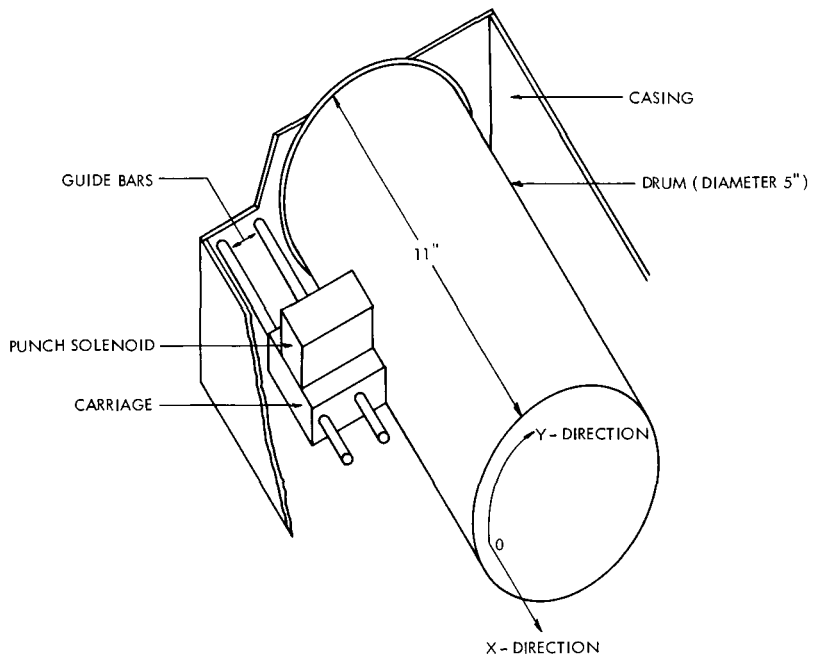

Fig. XII-14. Picture Brailler – mechanical transport and punch.

ball bearings and connected by worm gears to a Digimotor (trade name for stepping motors manufactured by Ledex Corporation), serves as a roller to hold the Braille sheet on which the embossed copy is to be made (Fig. XII-14). The drum is covered with a resilient rubber sheet. A carriage on which a solenoid is mounted slides along two guide bars in front of the drum and serves as the type head. By energizing the solenoid, a raised impression (dot) can be made on the Braille sheet. Hence by suitably positioning the carriage and rotating the drum, a meaningful pattern of dots can be produced on the Braille sheet by energizing the solenoid, thus constituting a picture. The carriage is also driven, through gears, by stepping motors so that all rotational motions of the drum and translational motions (of the solenoid) are essentially discrete in nature.

Potentiometers are attached to the drum and carriage drives. Voltage outputs of these potentiometers are applied to the pen and arm inputs of an X-Y recorder. The pen of the recorder has been replaced by a phototransistor and light source. The output of this light sensor then determines whether or not a dot is to be embossed.

Appropriate digital electronic equipment and a control panel are provided to enable manual adjustment of magnification of the image that is to be copied and the automatic production of the Braille picture.

A demonstration of this device was held at a conference of teachers of the blind at Perkins Institute for the Blind at Watertown, Massachusetts, in June 1964.

L. C. Ng, C. L. Fontaine, D. E. Troxel

6. ON-LINE BRAILLE CELL FOR THE TX-0 COMPUTER

The Braille cell was developed to establish on-line communication between a blind operator and the TX-0 computer. The cell consists of a series of 6 buffer flip-flops, into which a selected portion of the live register is gated. These flip-flops, through solenoid drivers, control 6 solenoids that raise the pins in a single Braille cell. These pins remain up until the reader depresses a switch located under his thumb. The reset switch clears the cell by resetting all of the buffer flip-flops and providing a voltage level that the computer can detect.

A test program was written for the TX-0 computer which converted flexowriter input from the on-line flexowriter into a modified grade I Braille. If any key on the flexowriter was depressed, its Braille code was immediately presented by the Braille cell until the cell was manually reset. The program detected the reset level and waited for another character to be typed. Also, typing a backspace transferred control to a storage routine, thereby allowing a typist to store up to 8000 flexowriter characters in memory. Pressing the tab key read out these characters to the Braille cell in the same order as they were typed in. The flow of Braille information to the blind user is limited only by his reading speed and the time he requires to push the reset button. Tests have been carried out that indicate that the reading speed can be as high as 4 characters/second without appreciable practice.

K. R. Ingham, C. L. Fontaine, D. E. Troxel

XIII. COMMUNICATIONS BIOPHYSICS*

Prof. M. Eden
Prof. J. L. Hall II
Prof. W. T. Peake**
Prof. R. R. Pfeiffer**
Prof. W. A. Rosenblith
Prof. W. M. Siebert
Prof. T. F. Weiss**
Dr. J. S. Barlow††
Dr. A. W. B. Cunningham‡‡
Dr. E. Giberman†
Dr. Gisele Guilbaud‡
Dr. R. D. Hall
Dr. N. Y-s. Kiang**
Dr. G. P. Moore***
Dr. R. Rojas
Dr. R. H. Wendt
R. M. Brown**
S. K. Burns
R. R. Capranica
R. J. Clayton
A. H. Crist**
N. I. Durlach
J. L. Elliot
P. R. Gray
J. J. Guinan, Jr.**
F. N. Jordan
K. C. Koerber**
D. P. Langbein**
P. L. Marcus
R. G. Mark
E. G. Merrill
M. Nahvi
P. H. O'Lague
Ann M. O'Rourke
D. J. M. Poussart
Cynthia M. Pyle
M. B. Sachs
J. J. Singer
Judith E. Swensen
I. H. Thomae
M. L. Wiederhold

A. RHYTHMIC AFTERDISCHARGE TO FLASHES

In response to slowly repeated flashes of light, the parieto-occipital EEG of human subjects with closed eyes frequently exhibits a series of rhythmic voltage fluctuations, a phenomenon that has been called the rhythmic sensory afterdischarge (references have been given elsewhere[1]). This rhythmicity is usually not evident upon visual inspection of the EEG inked trace, but becomes detectable by the use of averaging techniques. The frequency of the rhythmic afterdischarge may be quite close to, if not identical with, the predominant frequency of alpha activity. Therefore components of the EEG might appear in the averaged responses merely as sampling artefact and would not represent a true afterdischarge. Results from a series of mock-up experiments to illustrate this point have been described elsewhere.[2] Although the possibility of such an occurrence is greater the smaller the number of responses averaged, it cannot be eliminated even for averages of as many as 200 stimuli.

Several types of controls to test the validity of such averaged responses were described previously.[3,4] These include the use of arhythmically as well as rhythmically repeated stimuli, the use of several slightly different flash rates for periodically repeated

*This work was supported in part by the National Science Foundation (Grant GP-2495); in part by the National Institutes of Health (Grant MH-04737-04); and in part by the National Aeronautics and Space Administration (Grant NsG-496).

†From the Department of Physics, Weizmann Institute of Science, Rehovot, Israel.

‡Attaché de Recherches, Inst. Nat. d'Hygiène and Centre d'Études de Physiologie Nerveuse et d'Électrophysiologie, Paris, France.

**Also at Eaton-Peabody Laboratory, Massachusetts Eye and Ear Infirmary, Boston, Massachusetts.

††Research Affiliate in Communication Sciences from the Neurophysiological Laboratory of the Neurology Service of the Massachusetts General Hospital, Boston, Massachusetts.

‡‡Postdoctoral Fellow, National Institutes of Health

***Postdoctoral Fellow, National Academy of Science.

flashes, and the use of an opaque cover on the flash source so that no light reaches the subject's eyes. It should be noted that when no stimuli are applied it is assumed that all the statistical characteristics of the EEG are the same as they are when stimuli are presented. Such an assumption is not made, however, if the "control average traces" are carried out on the same recordings that were used to determine the averaged evoked responses. For these controls the averaging computer can be triggered at times that are shifted with respect to the actual instant of stimulation. When the stimuli are presented at random intervals, triggering the computer after a fixed initial delay, which is several times the average interval between stimuli, provides one such control.[3] This procedure, however, does not eliminate the possibility that there might be remnants of stimulus-locked activity in the EEG after such large delays. On the other hand, triggering the computer at a fixed interval of time before the occurrence of a stimulus entirely eliminates this possibility.

For periodic stimuli, the averaged response is simply repeated for integral positive or negative multiples of the interstimulus interval; hence this procedure does not provide a control for a sampling artifact. For periodic stimuli, however, the computer can be triggered by repeated pulses separated by intervals that differ slightly from the interflash interval. Alternatively, the computer can be triggered with randomly recurring pulses whose average interval is approximately the interstimulus interval.

Illustrations of these controls for averaged evoked responses are shown in Figs. XIII-1, XIII-2, and XIII-3. The visual stimuli produced by a stroboscope (Grass Model PS-2, intensity setting 4, peak flash intensity 4,000,000 lumens). The stroboscope was triggered by means of a repetitive-pulse generator (Tektronix Type 162). For randomly recurring stimuli, the latter was triggered by random low-frequency electrical noise from a noise generator (Elgenco Model 312A). The minimum interstimulus interval was 0.8 sec; the average interval was 1.2 sec.

The averaged evoked responses were computed with the aid of the Analog Computer for Neurophysiology,[5,6] modified for the simultaneous averaging of two channels on identical or on different time bases.[7] The autocorrelograms, which were computed with the Analog Correlator for Brain Potentials,[8] and the averaged responses were evaluated simultaneously. The two results were written out on the same time scale by a two-channel ink-writing galvanometer (Texas Instruments Dual Rectiriter). From the display of such a write-out (Fig. XIII-3), the time structure of the averaged response and the period of the rhythmic afterdischarge can be compared directly with the time structure of the EEG from which the average was obtained (for example, its average period and degree of rhythmicity). Such a direct comparison of the averaged evoked response with the EEG from which it is derived would not be possible, of course, if the summary analysis of the EEG were displayed as a spectrum.

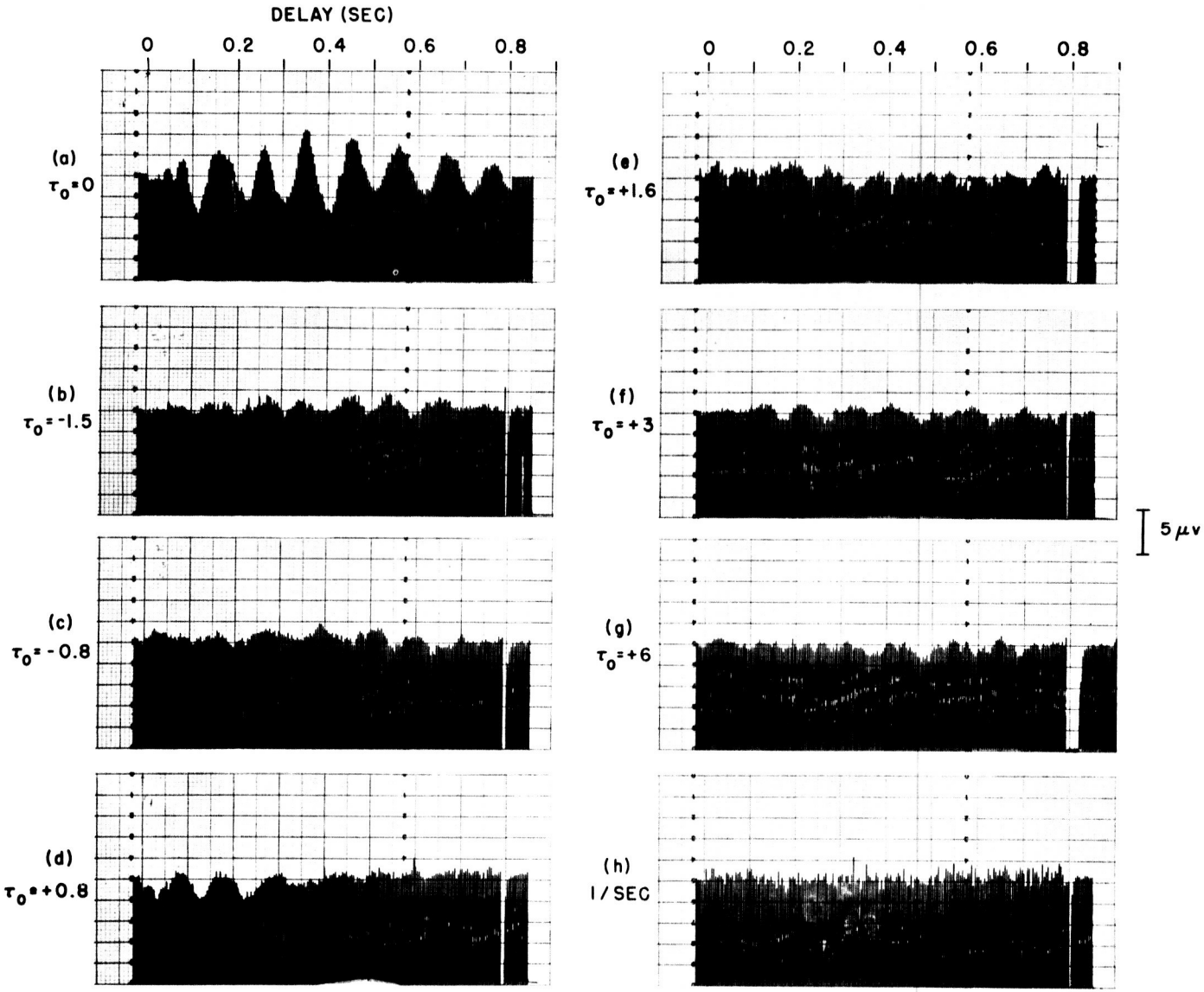

Fig. XIII-1. Averaged responses with different initial delays for a 4-minute parieto-occipital EEG recording. Aperiodic flashing, eyes closed. Subject: W. A. R.

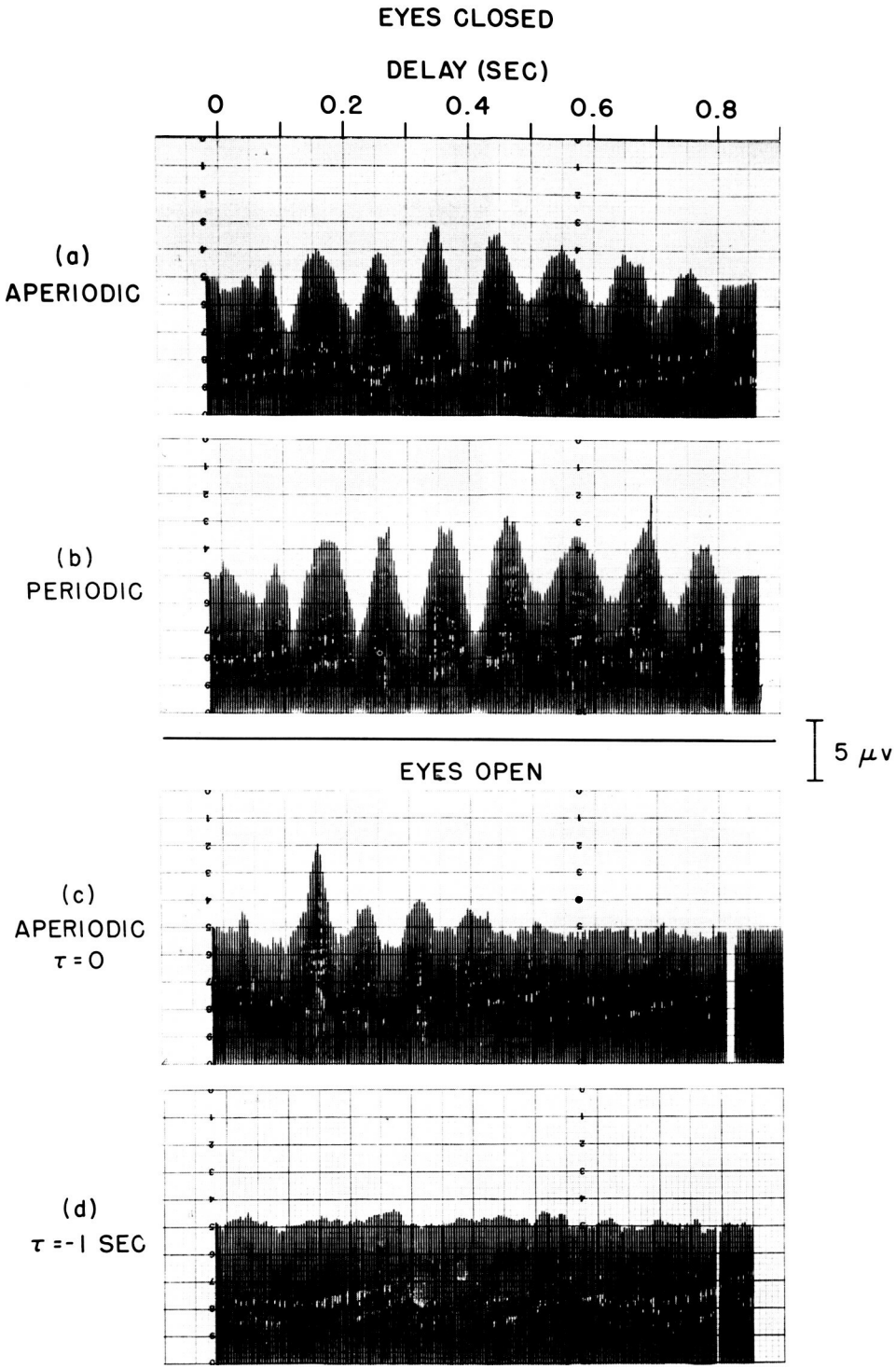

Fig. XIII-2. Averaged responses for aperiodic and periodic flashing with eyes closed and open. Subject: W. A. R.

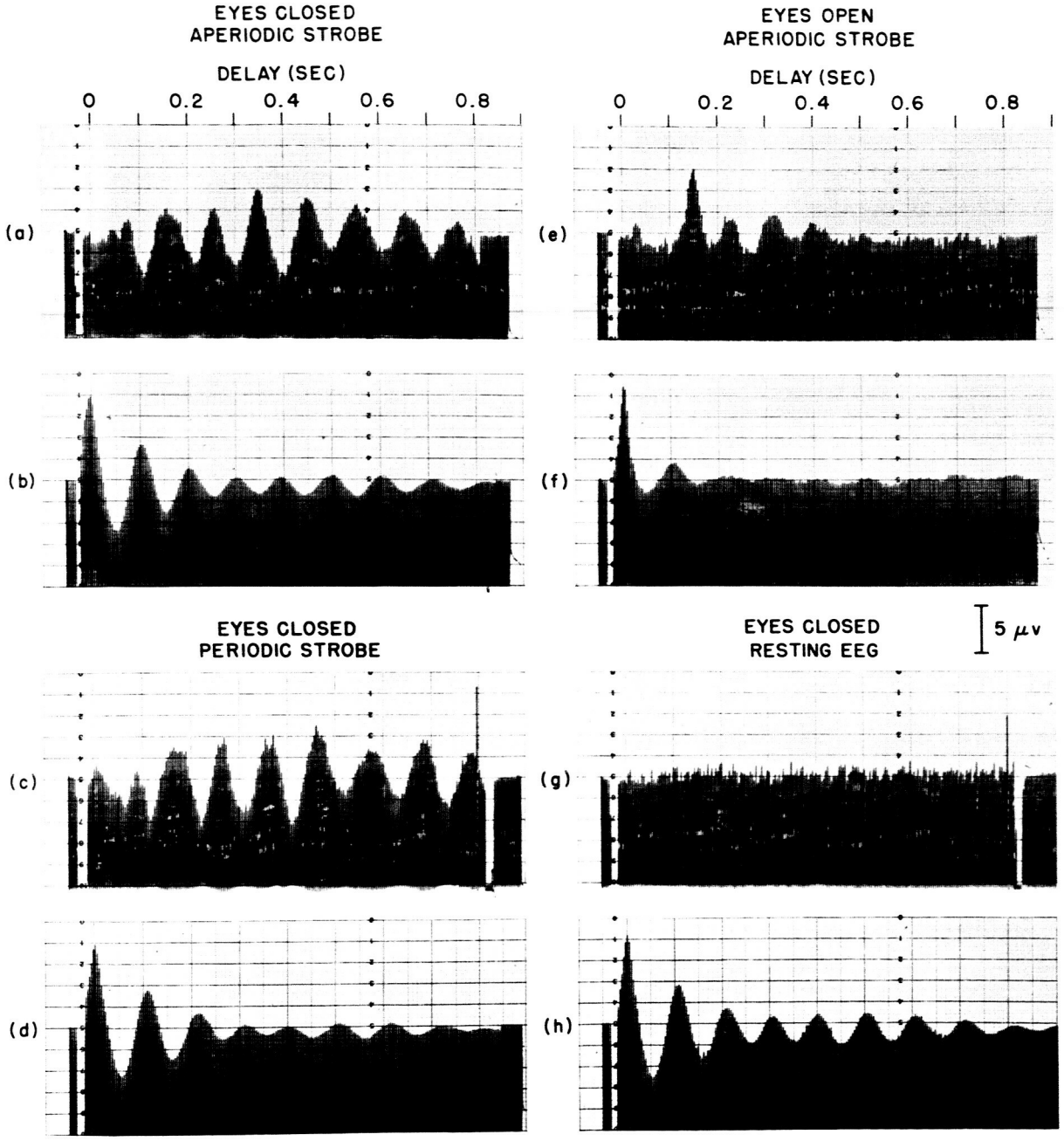

Fig. XIII-3. Averaged responses and autocorrelograms for the midline parieto-occipital EEG under various conditions. Subject: W. A. R.

In Fig. XIII-1a, the averaged evoked response from a 4-minute midline parieto-occipital EEG recording (eyes closed) is shown for randomly recurring flashes. Two hundred responses were averaged. There is a very prominent rhythmic afterdischarge with a frequency of ~10/sec. The peak-to-peak amplitude of individual waves ranges from 5 to 10 μv. The averaged responses shown in Fig. XIII-1b through h were computed as controls for this result. The results of b through g in Fig. XIII-1 may be considered as an ensemble of averages whose initial delays (τ_0) range from -1.5 sec to +6 sec. The departures from a flat baseline indicate the extent of artifact in the averaging process due to sampling error. The maximum peak-to-peak of these random excursions in any one average is approximately 2.5 μv, or approximately 1/4 the maximum peak-to-peak amplitude of the "real" response shown in Fig. XIII-1a. For the result shown in Fig. XIII-1h, the computer was triggered completely independently of the original EEG recording by a periodically recurring pulse which had an effective repetition rate of 1/sec. Because of this complete independence of computer triggering and original EEG recording, the successive pen excursions in Fig. XIII-1h are also independent, in contrast to those in Figs. XIII-1b through g. The peak-to-peak amplitude of the sampling-artifact error in Fig. XIII-1h is approximately 2.5 μv, which is in agreement with that shown in Figs. XIII-1b through g. (A similar computation for the resting EEG is shown in Fig. XIII-3g.)

After consideration of the results described above, there is little question about the significance of the rhythmic afterdischarge shown in Fig. XIII-1a; it is clearly not a result of a sampling artifact.

In Figs. XIII-2a and b, the responses evoked by arhythmic and by rhythmic stimulation (flash-rate 1/sec) are compared, and it is evident that the two are quite similar. In Fig. XIII-2c the evoked response for arhythmic stimulation for open eyes is shown. The initial delay of the control for this computation was set at -1 sec (Fig. XIII-2d). It is evident that an afterdischarge is definitely present when the eyes are open, although it is neither as great in amplitude nor as long in duration as that for eyes closed (see Fig. XIII-2a). The frequency of the afterdischarge in the two instances is very much the same. Comparison of the corresponding peaks of the waves for averages for eyes open and for eyes closed indicates that the latency of the afterdischarge is decreased by approximately 30 msec if the eyes are open. Alternatively, this apparent difference in latency could be ascribed to an initiation of the afterdischarge in an earlier phase if the eyes are open. Whether this effect is due wholly, or only in part, to the removal of the filtering effect of the eyelids cannot be stated from these results alone.

In Figs. XIII-3a and b, c and d, e and f, the averaged evoked responses for aperiodic stimulation with eyes closed, for periodic stimulation with eyes closed, and for aperiodic stimulation with eyes open are compared with the autocorrelograms of the corresponding EEG recordings from which the averaged evoked responses were

computed. For the averaged response shown in Fig. XIII-3g, and computed from the resting EEG recording, the computer was triggered entirely independently of the EEG recording by a pulse whose effective repetition rate was 1/sec.

From the autocorrelograms in Fig. XIII-3 it is evident that the average or dominant frequency is ~10/sec in all cases. The degree of rhythmicity, as evidenced by the rate of decrement of the amplitude of the envelope of the correlogram, is highest for the resting EEG recording, and lowest for photic stimulation with open eyes. It is of particular interest that the shorter persistence of rhythmicity in the autocorrelogram for eyes open is paralleled by a shorter duration of the sensory afterdischarge for the same recording (Figs. XIII-3e and f).

These results confirm and extend earlier reports[4] of the extent to which the rhythmic sensory afterdischarge and the intrinsic alpha activity exhibit parallel behavior in the parieto-occipital region of the cortex in man. Additional statistical tests have been carried out as a part of the computation in order to establish the validity of the phenomenon of the rhythmic afterdischarge. It is hoped that further study of the rhythmic afterdischarge may shed some light on the still unsolved problem of the exact origin and nature of intrinsic alpha activity.

This work was supported at the Massachusetts General Hospital by a U.S. Public Health Service Career Program Award (Number 5-K3-NB-9201), and by a Public Health Service Research Grant (NB-03752), from the National Institute of Neurophysiological Diseases and Blindness.

J. S. Barlow

References

1. J. S. Barlow, Evoked responses in relation to visual perception and oculomotor reaction times in man, Ann. N.Y. Acad. Sci. 112 (Art. 1), 432-467 (1964).

2. J. S. Barlow, Discussion of papers, Ann. N.Y. Acad. Sci. 112 (Art. 1), 219-223 (1964).

3. J. S. Barlow, Relation of intrinsic alpha activity to rhythmic activity induced by photic stimulation in man, Quarterly Progress Report No. 48, Research Laboratory of Electronics, M.I.T., January 15, 1958, pp. 128-133.

4. J. S. Barlow, Rhythmic activity induced by photic stimulation in relation to intrinsic alpha activity of the brain in man, EEG Clin. Neurophysiol. 12, 317-326 (1960).

5. J. S. Barlow, A versatile analog computer for neurophysiological research, Quarterly Progress Report No. 61, Research Laboratory of Electronics, M.I.T., April 1961, pp. 184-185.

6. J. S. Barlow, A versatile analog computer for neurophysiological research, Digest of the 1961 International Conference on Medical Electronics, p. 27.

7. J. S. Barlow, Some statistical characteristics of electrocortical activity in relation to visual-oculomotor tracking in man, Bol. Inst. Estud. Méd. Biol. (Mexico) 21, 497-518 (1963).

8. J. S. Barlow and R. M. Brown, An analog correlator system for brain potentials, Technical Report 300, Research Laboratory of Electronics, M.I.T., July 14, 1955.

XIV. NEUROPHYSIOLOGY*

W. S. McCulloch
F. S. Axelrod
H. A. Baldwin
M. Blum
S. Frenk
R. C. Gesteland
M. C. Goodall
B. Howland
W. L. Kilmer
K. Kornacker
J. Y. Lettvin
Diane Major
L. M. Mendell
Barbara C. Pickard
W. F. Pickard
W. H. Pitts
G. Szekely
A. Taub
P. D. Wall
Barbara G. Wickelgren

A. TOWARD A THEORY OF THE RETICULAR FORMATION†

Throughout the life of the vertebrates, the core of the central nervous system, sometimes called the reticular formation, has retained the power to commit the whole animal to one mode of behavior rather than another. Its anatomy, or wiring diagram, is fairly well known, but thus far no theory of its circuit action has been proposed which could possibly account for its known performance. Its basic structure is that of a string of similar modules, wide but shallow in computation everywhere, and connected not merely from module to adjacent module, but by long jumpers between distant modules. Analysis of its circuit actions, heretofore proposed in terms of finite automata or coupled nonlinear oscillators, has failed. We propose probabilistic automata that handle regular events as proper modules. The behavior of a connected chain of such modules is still under investigation.

Work continues on a precise formulation of the reticular formation model, which will be programmed on a large digital computer during the next quarter.

W. L. Kilmer, W. S. McCulloch

B. A GENERAL THEORY OF OBSERVATION AND CONTROL‡

This reporting period was occupied with heuristic considerations concerning models and representations. The object of the former was to secure realistic assumptions, in particular, the finiteness of channel capacity for continuous channels. In the latter part, the aim has been to connect representations with various formalized languages. Considered together, these approaches have notably helped to bridge the gap between the metrical (probabilistic) and the logical (language) aspects of two-way communication

*This work was supported in part by the Bell Telephone Laboratories, Inc.; The Teagle Foundation, Inc.; the National Science Foundation (Grant GP-2495); the National Institutes of Health (Grants MH-04737-04 and NB-04985-01); the U. S. Air Force (Aeronautical Systems Division) under Contract AF 33(615)-1747; and the National Aeronautics and Space Administration (Grant NsG-496).

†This work is supported in part by U. S. Air Force Cambridge Research Laboratories Contract AF19(628)-3807 (administered by Montana State College).

‡This work was supported in part by the U. S. Air Force (Electronic Systems Division) under Contract AF19(628)-4147.

between the observer O and a universe U.

1. Models

A nonrelativistic quantum-mechanical N-particle system, with states Σ, in interaction with the electromagnetic (EM) field can be taken as a model in which the input is the EM potential A and the output signal is the particle current J. Such a system can be characterized as a probabilistic automaton in which the next-state and output functions

$$\Sigma' \rightarrow (A, \Sigma)$$

$$J \rightarrow (A, \Sigma)$$

are given implicitly by the wave equation and projection operators, respectively. Such a characterization shows:

(a) For finite channel capacity, all three objects (A, Σ, J) must be quantized fields.

(b) For the same reason, there must be finite bandwidth, hence the restriction in general to the nonrelativistic formalism.

(c) Finding the operator conjugate to the input is an essential step in determining the next-state function. (Because of the preferred role of time, this is the energy conjugate.) The functions themselves appear in the theory as Green's functions (propagators).

(d) The assumption of finiteness suggests approximation by finite probabilistic automata (e.g., discrete finite memory channels) as a fruitful approach.

2. Representations

The object here, in conformity with conclusion (d), is to represent the current history of the channels as a finite structure with conditional probabilities attached. An element of such a representation is a triad, A, R, S (axioms, rules, signals), where S is to be considered as generated by application of R to A. Such elements can be built into a graph G with A's as nodes and R's as connections, where A' is connected to A if it is in the equivalence class $\{A\}_R$. A path ARA'R'... in G represents a signal S^* that is received when A, A', ... (punctuating the null signal) is sent, in the sense that R, R', ... generate the best approximation to S^* in the segments between the A's. A primitive decision theory for the probability $Pr(R/A, S^*)$ has been given elsewhere.[1] For $Pr(A'/R, S^*)$ one needs arguments of a higher logical type, that is, equivalence classes $\{R\}_{\mathcal{R}}$ under some super rule $\mathcal{R}$.

3. Relation between Model and Representation

A continuous signal segment $A(t, t')$ can be quantized without loss of information (this is essentially a sample data process) thereby giving a discrete version A. In the model, $A(t, t')$ determined a transformation of the internal state Σ and thus the output $J(t)$, which

can also be quantized as a signal S^*. Although there are problems about how this conversion should be made, the possibility of a correspondence here shows that the role of the model should be that of formalizing a decision procedure for Σ. In particular, it shows that models corresponding to open systems in which the particle number N is not conserved will have to be considered.

4. Application to Relativistic Quantum Theory (RQM)

The present theory is known not to be consistent. According to the point of view taken here, it should occupy a unique place among all theories of observation and control. This makes it possible to characterize much more sharply a conjecture previously based on group-theoretic considerations[2]; namely, RQM is characterized by a three-way symmetry between input, output, and state spaces. This 'principle of triality' is known to be associated with certain exceptional continuous transformation groups, in effect, with those that are automorphisms of the octonion plane.[3] A paper on this subject, entitled "Causality, Measurement, Mach's Principle," is in preparation.

5. Problem of Higher Functions in the Brain

A paper with this title was given at the International Biophysics Congress, in Paris, June 24-27, 1964. Three points were emphasized: (i) the necessity of acquiring universal algorithms; (ii) the use of redundancy as a learning mechanism; (iii) the possible role of RNA in the block coding of memory.

M. C. Goodall

References

1. M. C. Goodall, Realizability of Inductive Logic, IEEE Trans. Vol. MIL-7, Nos. 2 and 3, pp. 168-173, April-July, 1963.

2. M. C. Goodall, Foundations of relativistic quantum mechanics, Nature 195, 167 (1962).

3. C. Chavalley, Algebraic Theory of Spinors (Columbia University Press, New York, 1954).

C. RESULTS OF BIOLOGICAL TESTS WITH La^{+++}

In Quarterly Progress Report No. 73 (pages 204-208), we presented the introduction to a new theory of passive ionic fluxes through nerve membrane. The theory has not been submitted to extensive tests, but several predictions have been verified in detail.

1. La^{+++} was expected to act as a super Ca^{++}, binding itself coulombically to the surface of the membrane and neither penetrating nor dislodging to allow other ions to penetrate. In fact it does block nerve membrane quite reversibly in such a way that no

significant cation current can be forced through the membrane. This work was done with Dr. John Moore and Dr. M. Takata at Duke University. A paper describing this research is now in manuscript.

J. Y. Lettvin, W. F. Pickard

2. It has been proposed that La^{+++} can replace Ca^{++} on the outer surface of the cell membrane and other closed structures. We have studied the possibility of using La^{+++} as a stain in electron microscopy. Lobster and crayfish nerves have been incubated in $La(NO_3)_3$ and postfixed in gluteraldehyde. A dense band appeared along the outer surface of the membranes.

We synthesized $La(MnO_4)_3$ and used it as a fixative. Material fixed in balanced solutions of this salt differs remarkably from the specimens fixed in $KMnO_4$. The gap substance between unmyelinated axons appears densely stained in crayfish and lobster. A similar staining occurs in the optic fibers of the retina of the frog. The intraperiod line of myelin of the frog sciatic and mouse optic axons is heavily stained.

The space between membranes of the retinal rod outer segment also appears densely stained alternately, as is expected from the folding membrane model. We also suspect that La^{+++} replaces Ca^{++} on the neuraminic acid groups attached to membrane, as well as other ground substances, stabilizing as well as staining them.

This work was done in collaboration with Dr. C. Doggenweiler and Dr. J. D. Robertson at McLean Hospital, Belmont, Massachusetts.

S. Frenk, J. Y. Lettvin, W. F. Pickard

D. RESULTS OF BIOLOGICAL TESTS WITH Cs^+ AND Rb^+

Our insistence that it is the shape, as well as the size and charge of an ion, that determines passage through the nerve membrane led us to compare Cs^+ and Rb^+ with the other alkali cations. Rb^+, for reasons given in Quarterly Progress Report No. 73 (pages 204-208), ought to act as K^+. But Cs^+, having no water of hydration and having the same mobilities in solution and the same interaction radius as hydrated K^+, should not supplant either Na^+ or K^+ in the membrane because it has too rigid a morphe. This prediction was borne out in voltage-clamp experiments on squid axon carried out at Woods Hole, again in collaboration with Dr. John Moore and his co-workers from Duke University. A paper concerning this work will be published in the Proceedings of the National Academy of Sciences.

J. Y. Lettvin, W. F. Pickard

E. EXTENSION OF THE MEMBRANE HYPOTHESIS

The membrane hypothesis permits of further, and very drastic extension. The notion that to pass the membrane a molecule must first fit into the lattice of the membrane,

thereby becoming an integral part of it, suggested to us that we ought to consider the equivalence of plastic flow and deformation in the cell membrane. That is, we asked ourselves whether in a two-dimensional lattice there ought to be the equivalent of domain propagation and deformation spread as in the classical cases handled by Bragg. Indeed, it seemed to us that the ionic movements, particularly of Ca^{++}, off and on to the laminar micelle ought to be accompanied by mechanical change. In Quarterly Progress Report No. 64 (page 291) we reported (in collaboration with Dr. Sten-Knudsen) that a twitch of a nerve fiber occurred during the rising phase of a nerve spike. At that time we tried to think of a mechanism for this phenomenon and were unsatisfied with the notion that it was a change in bulk of the axon because of the entry of water with Na^{+}. According to our present notions such a change would be expected when Ca^{++} leaves the membrane on its inner surface. This led us to the notion that a lattice distortion at a point might cause a propagating disturbance throughout the rest of the lattice. We searched for experimental evidence to support this hypothesis and found the following:

1. The Drs. Levinthal informed us that a single molecule of K-colicine turns off all of the oxidative phosphorylation in a single E. Coli when it is adsorbed to the outer surface. If the molecule is washed off, the oxidative phosphorylation returns.

2. A single molecule of botulinus toxin turns off the ability of a nerve terminus to liberate acetylcholine.

3. If a muscle is denervated, the sensitivity to acetylcholine, which is normally specific to the end plate, begins to spread away from the end-plate region until at the end of a few weeks the whole muscle membrane is sensitive to this compound. If the nerve regenerates, the muscle fiber again becomes sensitive to acetylcholine only at the end plate.

4. The entrance of a sperm cell into an ovum, as in Arbacia, causes the membrane forthwith to become impenetrable to other sperm. Touching the egg with a needle produces the same effect.

It is repulsive to think that the action of a K-colicine or of a botulinus toxin molecule is due to its being able to act at a distance. Equally repulsive is the notion that the molecule attracts to itself those parts of the substrate that would ordinarily be fluxing this way and that way through the membrane. An alternative suggestion is that the change of some local process by the adsorbed particle produces a regenerative change that spreads into contiguous regions and so affects that process everywhere. Because of these observations, we think that the surficial spread of defects and distortions over a membrane is consistent with its being as ordered as it appears to be in the electron microscope.

We would expect several types of domain propagation.

1. The setting up of local strain in the membrane lattice, or the relieving of such a strain, institutes a progressive self-powered change at all other points in the membrane. For example, consider the ability of a red blood cell to break and disappear

completely in less than 10 msec, and the behavior of the Arbacia egg.

2. A local change causes adjacent regions to change, but the effect decreases with distance from the local change. For example, the effects of heavy metal ions on a unit membrane are primarily local.

3. A local change in some particular process causes that process and only that process to change everywhere in the membrane. This is similar to a skip propagation for a group of processes of one type. For example, note the action of K-colicine and of botulinus toxin.

If paucimolecular cases are considered instead of monomolecular cases, how is the bulk of neuropharmacology to be explained? Trivially small concentrations of certain toxins and drugs cause enormous changes in nervous behavior. Thus, a small dose of strychnine will kill a man, although it is many orders of magnitude less in concentration than any of the ions or nutrients of the cell. The dose is not metabolized and cannot be supposed to act in competition with ions or nutrients everywhere. At the same time, it has little effect on the various enzyme systems. Indeed, what happens seems to be that the membrane potential, the after-potentials, and the resting impedance of nerve are changed.[1,2] Its poisonous action is attributable solely to these minute shifts. Yet strychnine is in more or less equal concentration throughout the body of a poisoned man. If it acted by virtue of affecting ion passage only by competition, there would not be enough of it to account for the changes observed, if ionic channels were utterly independent of each other everywhere and under all circumstances. Thus we conceive that the essence of explaining the whole corpus of present inexplicable neuropharmacology lies in the realm of showing domain propagation along the membrane arising from drugs on the membrane. At the extremes, we have one botulinus toxin molecule affecting all of a certain sort of microstructure in a cell, and one procaine molecule affecting only its most immediate neighborhood.

This concept also enters importantly into that most difficult of fields – embryology.

The present deplorable micro-Lamarckian tendency (à la Hyden) is to suppose that what occurs in one portion of a cell is somehow transmogrified into a change in RNA structure, which replicating industriously, transmits its information to change another part of the cell. How much more elegant it is to suppose that the very membrane of the cell is, in a sense, its nervous system, whereby influences from various points produce fields spreading over the surface, so as to transmit and combine information. In this case, instead of two mysterious transformations (from the cell structure to RNA code and from RNA code back to cell structure) we have only one, the lateral propagation of influences along a membrane.

J. Y. Lettvin, W. F. Pickard

References

1. J. Y. Lettvin, W. H. Pitts, W. S. McCulloch, and P. D. Wall, Central effects of strychnine on spinal afferent fibers, Arch. Neurol. Psychiat. 75, 323-324 (1956).

2. P. D. Wall, W. S. McCulloch, J. Y. Lettvin, and W. H. Pitts, Effects of strychnine with special reference to spinal afferent fibers, Epilepsia, Series III, Vol. 4, pp. 29-40, 1955.

F. OLFACTORY PROCESSES

The work on olfactory processes has yielded an extraordinarily varied set of results. Several interactions are observable between electro-olfactograms. We have contrived a single model that explains these interactions and the activity of the single fiber of the olfactory nerve.

We can distinguish two classes of ions by their relation to the membrane potential. One class consists of those species whose chemical potential across the membrane is close to the membrane potential, that is, those whose activity is in the ratio predicted from the measurement of free energy differences across the membrane. The other class consists of those ions whose chemical potential across the membrane is far from that predicted by the membrane potential, that is, the Donnan equilibrium does not apply to these. The first class we call "equilibrium ions" or "shunt species." If we increase the ease with which these ions can cross the membrane, the membrane potential will be little affected, a small net current will flow, and every part of the membrane will be increasingly decoupled from every other part. If any current flows through the membrane, it will flow preferentially through points where this ion species can flow. The second class we call "nonequilibrium ions" or "current-generating species." If we increase the ease with which these ions cross the membrane, current will be generated because the ions will be flowing down a large electrochemical gradient that differs from the membrane potential. The variational resistivity of the membrane changes in the same way as it does for the shunt-species case. Thus the effect of a decrease in resistivity to the current-generating species of ion is also a shunting, but it is accompanied by a current flow. We propose that these two processes occur at receptor sites on the cells of the olfactory mucosa. An odorous stimulus increases the ease with which either class of ions, or both, can move through the membrane. A signal is generated in the olfactory receptor axon if a large enough change in current flow through the axon hillock occurs.

We consider a sheet of densely packed receptor cells with sensitive sites on the input end sticking up into a mucus layer of high conductivity and with axons projecting through the membrane at the bottom around the edges to the mucus on top. We measure the voltage change between the top and bottom of the sheet caused by changes in current

flowing as a result of odors arriving at appropriate receptor sites. We choose the polarity so that increased flow of the current-generating species ion causes a negative voltage transient. A particular receptor cell site can respond several possible ways to odors:

1. It can do nothing.
2. Its permeability to the current-generating species can increase.
3. Its permeability to the shunt species can increase.
4. Its permeability to both current-generating and shunt species can increase.

Consider the patterns of the measured voltages that can be obtained when we have a mucosa made up of receptor cells which can have sites of more than one type under the following assumptions. Each receptor cell must have a relatively small number of receptor sites. Every site that can gate the current-generating species must look like every other electrically, as seen from the axon hillock. The same must also be true for every shunt-species site. The surface resistivity of the epithelium must be low compared with the bulk resistivity of the sheet so that external currents generated by a cell have a space constant large compared with a cell diameter. The excitement of the tissue by an odor will generate extracellular currents flowing between mucus and basement membrane which combined result in an IR drop that is our measured signal. Qualitatively, these voltages can be predicted for the limit conditions:

(a) Let all sites gate the current-generating ionic species; that is, any odor causes the current-generating species ion to flow at a site or has no effect.

The external current flow will increase linearly for increases of odor strength at low concentrations, but at high concentrations will asymptotically approach the limit current acquired when all sites are occupied. Thus there will be additivity for the effects of two puffs of smell at low concentration and occlusion between the effects at high concentration.

(b) Let all sites gate the shunting ionic species; that is, any odor opens the membrane to the shunt-species ion or has no effect.

The phenomena in this case are the same as in (a) but of opposite polarity and much smaller because the resting potential of the membrane is close to the potential of the shunt species.

(c) Let there be two types of cells, one with sites of the current-generating species sensitive to an odor, and the other with shunt-species sites sensitive to the odor.

The voltage transients from stimulating with two odor puffs would add algebraically and be of opposite polarities, the wave from the current-generating species being large and negative, that from the shunting species being small and positive.

(d) Let both types of sites exist on the same cell.

In this case the effect that is due to one type of site activity will be attenuated by activity at the other type of site. Thus if, during an odor causing the voltage swing that is typical of the current-generating species, an odor is delivered which excites the

shunt-species sites on the same cell, there will be a local short circuit, and much of the current from one site will flow back into the cell at the other site rather than through the long external path to the axon hillock. This phenomenon is parallel to the electrical signs of synaptic inhibition seen elsewhere in the nervous system.

The model that we propose, then, allows six possible conditions:

For two stimuli – if both gate the current-generating sites

(i) negative transients add.

(ii) negative transients occlude.

For two stimuli – if both gate the shunt sites

(iii) positive transients add.

(iv) positive transients occlude.

For two stimuli – if they evoke signals of the opposite sign

(v) the negative and positive transients add.

(vi) the negative and positive transients attenuate.each other.

In a series of studies of the electro-olfactograms of the frog's nose obtained with multiple odor stimulation, we have been able to demonstrate each of the six phenomena listed and can find no case that is not included in the list. We suggest that our model is in fact a description of the mechanism by which odorous substances signal their presence at olfactory receptor endings.

In an attempt to verify this model we measured impedance changes across the mucosa caused by an odor. We found an interesting complication. If the measurement is made at low frequencies, that is, near 2 cps, the impedance follows the course predicted by our theory for the slow transients. We have not yet succeeded in devising a scheme for resolving the impedance changes during the faster, positive-going transients because the time course of the phenomena is about the same as the duration of the measuring signal. When we go to the higher frequencies (~25 cps), we measure a most surprising reactance change in the direction opposite to the change in low-frequency impedance and much larger in magnitude. We are now trying to find the cause of this apparent reactance increase, and to resolve the change in resistance during the short positive transient.

R. C. Gesteland, J. Y. Lettvin

G. ENTOPTIC PHENOMENA AND VISUAL ILLUSIONS

Entoptic phenomena are elegantly described and explained by Helmholtz in his Physiological Optics (Chapter 50). They have not been put to very much use, although they form a rather simple way to show most modern visual psychological problems.

1. Purkinje tree. This is the shadow cast on the retina by its own blood vessels. Since any image cast on the retina is shaded by these vessels and the aperture of the

pupil is not large enough to blur them, the question naturally arises, Why we don't see them ubiquitously? The answer is rather simple, we don't and we do. Since these vessels form a fixed image on the retina with respect to the retina, they are not to be seen, since stabilized images disappear. They do form a distributed blind spot in every respect similar to the blind spot where the optic nerve enters the eye, and produce effects very similar to those given by the latter. For example, if you cause a small black disc to pass over the visual field where the optic nerve entrance causes a hiatus, the disc disappears and then reappears. From this you infer that you have a blind spot. In a very similar way edges obscured by the shadow of a blood vessel undergo a sort of wavering that is quite distinctive. Two optical illusions can be used to show this. The simplest one is that given by ordinary extended checkerboard pattern. If you look at the very center of the pattern for a while, you will notice a kind of wavering of checks several degrees in the periphery both above and below your center of gaze. This is particularly marked with strongly colored checks. A more complex one is the illusion given by McKay of the apparent rotation at the periphery of a strongly detailed radial pattern. When you have achieved the seeing of these jitterings you can superpose upon the image in front of you the pattern of the blood vessels in your eye by illuminating through your eyelid and at the orbital margin with a constantly moving source of light, for example, the head of a pencil flashlight held against the orbital margin. Then you will see that the wavering is in fact a sort of constantly moving moiré pattern formed by the interaction of the blood vessels with the image projected into the retina. An interesting subsidiary exercise is to close your eyes and get the image of the blood vessels alone. Then, if you use two pencil flashlights, one above the eye and one below, and turn them on and off alternately, you will see that only the horizontal branches of the tree are clear. On the other hand, if you illuminate alternately the inner and outer corners of the eye, only the vertical branches appear. No more elegant demonstration exists to show how eye movements ordinarily enhance those image boundaries that are orthogonal to the movements. Helmholtz has a lovely description of this particular phenomenon.

2. If you use a cold light source of high intensity such as is obtained by interposing a glass rod with a rounded end between the light and your eye (or alternatively a flexible light pipe) and then move the light about on the rim of your closed eye so as to see the Purkinje tree, you will notice that the tree moves in the direction of the light, as it is expected to if it is due to the shadow of blood vessels. Looking ahead into the far distance of the scene evoked in this way, you see that the tree is moving against a reddish background in the center of which, that is, in the direction of your gaze, there is a pebbly patch the very center of which either moves not at all or in the opposite direction to the Purkinje tree. It is as if you are looking into a valley, keeping your eyes fixed at the bottom and moving from side to side. This area (first noted by Purkinje and properly called "shagreen-like" by Helmholtz) is the shadow of irregularities on the surface of

your fovea cast upon the cones beneath and highlights; and shadows arise because of enhancement by the Stiles-Crawford effect. Now, you might think that this is only a curiosity, but very quickly it can be shown that it is not trivial. For, if you look at McKay's radial figure again, and note the constant seeming movement of the center where you look at it and, in a way similar to projecting the Purkinje tree, project this foveal pattern onto McKay's figure, again you will see that that apparent rotation arises as a moiré pattern of interaction between the foveal structure and the image.

3. A very ambitious but rewarding amusement is to train yourself to draw a part of the Purkinje tree on a sheet of paper upon which there is a point of fixation. For, then you can quickly satisfy yourself that those few sketched lines vanish and reappear when you gaze at the fixation point. A more extended discussion of entoptic studies is being prepared for publication.

J. Y. Lettvin

H. PHYSIOLOGICAL AMPLIFIER

Figure XIV-1 shows a very inexpensive AC coupled amplifier for use with high-impedance metal microelectrodes. It is novel in that there is only one stage of gain,

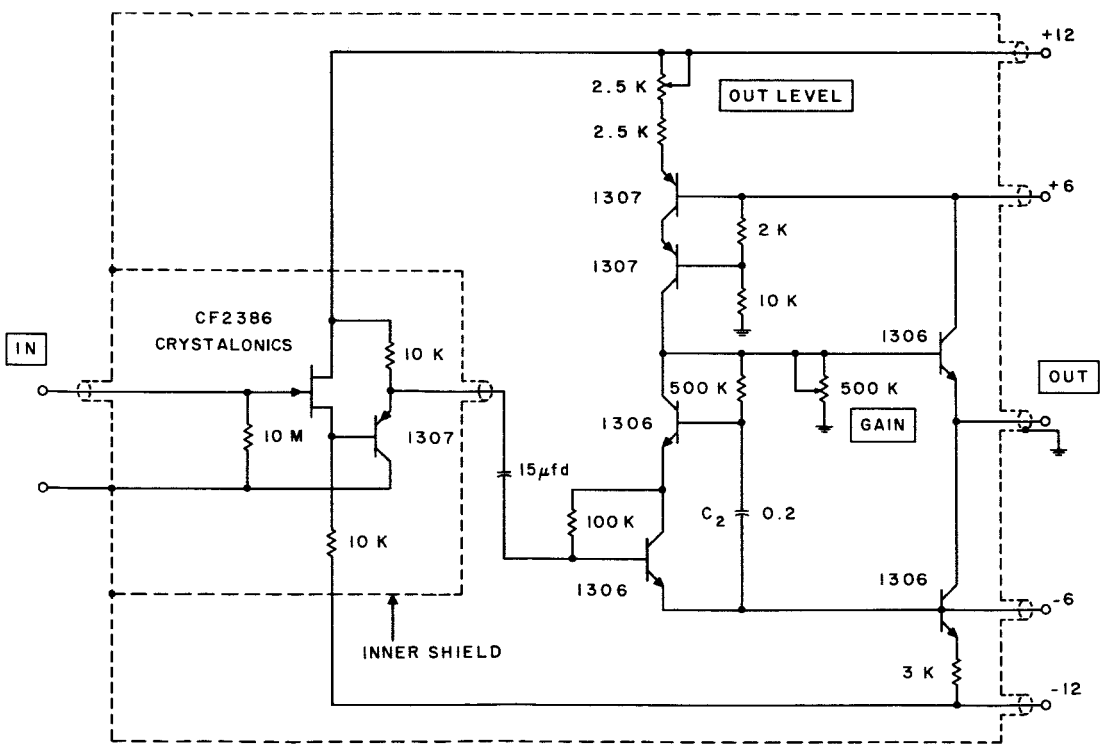

C_2 determines low-frequency cutoff.
The first stage must be completely shielded to get good high-frequency response.

Fig. XIV-1. Physiological amplifier circuit.

and the gain is variable from 0 to 10,000 continuously. It has a flat band from approximately 20 cycles to 20 kc at full gain, and the bandwidth increases as the gain is lowered.

J. Y. Lettvin