LOW VOLTAGE DC TO DC CONVERTER-REGULATOR WITH MINIMUM EXTERNAL MAGNETIC FIELD DISTURBANCE

REPORT NO. 2

Contract Number NAS 5-3899

National Aeronautics and Space Administration

Second Quarterly Progress Report

1 September 1964 to 30 November 1964

Goddard Space Flight Center

Greenbelt, Maryland

FACILITY FORM 602

N65 15824 (ACCESSION NUMBER)

(THRU)

44 (PAGES)

1 (CODE)

CR 60397 (NASA CR OR TMX OR AD NUMBER)

09 (CATEGORY)

Submitted by

Honeywell Inc.

Ordnance Division

Hopkins, Minnesota

Honeywell

ORDNANCE

A DIVISION OF THE

MILITARY PRODUCTS GROUP

GPO PRICE $ _____

OTS PRICE(S) $ _____

Hard copy (HC) 2.00

Microfiche (MF) .50

LOW VOLTAGE DC TO DC CONVERTER-REGULATOR WITH MINIMUM EXTERNAL MAGNETIC FIELD DISTURBANCE

REPORT 2

Contract Number NAS 5-3899

National Aeronautics and Space Administration

Second Quarterly Progress Report

1 September 1964 to 30 November 1964

THE OBJECT of this contract is to design and develop a low voltage dc to high voltage dc converter-regulator with minimum external magnetic field disturbance. This device will efficiently convert the inherently low voltages of newly developed energy sources to useful higher regulated voltages and provide more reliable power systems for space applications which also have a requirement for minimum external magnetic field disturbance.

Prepared by:

John T. Lingle
Project Engineer

K. J. Jenson
Development Engineer

Approved by:

H. T. Mooers
Project Supervisor

W. K. Maenpaa
Section Chief

Submitted by
Honeywell Inc.
ORDNANCE DIVISION
Hopkins, Minnesota

CONTENTS

Section		Page
1	PURPOSE	1
2	SUMMARY	2
3	CONFERENCES	5
4	PROJECT DETAILS	7
	A. Fabrication of a Coaxial Low Input Voltage Converter Model	7
	B. Fabrication of a Voltage Regulator Assembly For Coaxial Converter	13
	C. Model Performance	17
	D. Magnetic Field Measurements	24
	E. Circuit Description and Improvements	24
	F. Reliability Calculations	32
5	CONCLUSIONS	33
6	PROGRAM FOR THE NEXT QUARTER	37
7	APPENDIX A: ANALYSIS OF PULSE WIDTH MODULATION REGULATOR CHOPPING TRANSISTOR CIRCUITRY	38

ILLUSTRATIONS

Figure		Page
1	Coaxial Low Input Voltage Converter (Photograph)	8
2	Coaxial Low Input Voltage Converter (Layout)	10
3	Coaxial Low Input Voltage Converter and Voltage Regulator Assembly (Photograph)	14
4	Voltage Regulator Printed Circuit Board	14
5	Performance Characteristics of the Coaxial Low Input Voltage Converter-Regulator (Efficiency Vs. Output Power)	18
6	Performance Characteristics of the Coaxial Low Input Voltage Converter-Regulator (Output Voltage Vs. Output Power)	20
7	Performance Characteristics of the Coaxial Low Input Voltage Converter-Regulator (Output Voltage Vs. Output Power)	20
8	Performance Characteristics of Coaxial Low Input Voltage Converter (Power Oscillator Frequency Vs. Output Power)	22
9	Performance Characteristics of Coaxial Low Input Voltage Converter (Power Oscillator Frequency Vs. Output Power)	22
10	Circuit Diagram of Coaxial Low Input Voltage Converter-Regulator	28
11	Circuit Diagram of Pulse Width Modulator Chopping Transistor and Directly Related Drive Circuitry	39

1

PURPOSE

THE PURPOSE of this contract is to design and to develop an efficient, reliable, and lightweight, transistor low voltage dc to high voltage dc converter with minimum external magnetic field disturbance for space applications. The converter will be designed to convert the output of fuel cells, thermionic diodes, thermoelectric generators, solar cells, and high performance single cell electrochemical batteries to a regulated 28 volt dc output.

The program includes circuit optimization and new design efforts to reduce external magnetic field disturbance, size, and weight. Effort will be directed toward construction of a model and magnetic field measurements to verify that the design has been optimized to meet the performance requirements and design goals.

2

SUMMARY

DURING THE second quarter, effort has been directed towards design optimization, circuit improvement, fabrication of the first coaxial low input voltage converter-regulator model, and checkout of this model.

The coaxial converter model has been fabricated with an aluminum cylindrical construction which utilizes the chassis as primary bus structure for minimum weight. Tapered press fit joints have been used to provide excellent electrical connections which can be easily assembled and disassembled. The coaxial design theoretically produces zero external magnetic fields and hence should provide minimum external magnetic field disturbance as well as excellent radio noise interference suppression. This design also provides excellent heat transfer from the transistor collector junctions to the outer cylindrical case where it can be easily dissipated. To further diminish magnetic field disturbance the converter connects to a coaxial input lead. The coaxial input lead and primary circuit construction also minimize voltage spikes at the converter input during switching and this improves the converter efficiency by reducing the switching losses.

Circuit improvements have been incorporated into this model to reduce the switching losses of the low input voltage converter section and to provide more optimum drive and back bias for the chopping transistor in the pulse width modulation voltage regulator. These improvements have resulted in an increase in efficiency and also allowed an increase in operating frequency which has reduced the model weight. The incorporation of current drive in the voltage regulator has improved the device reliability by guarantying that the regulator chopping transistor will be operated in the safe saturation region even under the most severe overload conditions.

The voltage regulator has been fabricated in a cylindrical container which attaches to the end of the converter section. This arrangement allows the two sections to be separated so that the magnetic disturbance caused by each can be determined.

The current flow paths on the printed circuit boards for the regulator control circuitry have been arranged in a manner which tends to cancel magnetic fields caused by current flow. This and the use of coaxial leads for the heavier secondary currents should provide satisfactory magnetic and radio noise suppression.

Performance tests on the low input voltage converter regulator have established that the over-all performance has been improved substantially. The efficiency is approximately 5 percent higher than that of the unit fabricated under the previous contract, NAS5-3441, and it is above the 75 percent design goal. This efficiency increase has been obtained while also realizing a substantial reduction in device weight.

The advantages afforded by the coaxial converter design and the incorporation of recent circuit changes has resulted in substantial improvements in the low input voltage converter-regulator efficiency, weight, reliability, size, heat transfer, and electromagnetic disturbance. We plan to conduct more extensive

performance and magnetic field disturbance tests during the next quarter. The present performance tests have verified that this design has provided substantial improvements which has further increased the practicality of energy conversion source - low input voltage converter-regulator systems for space applications.

3

CONFERENCES

ON OCTOBER 16, 1964, Mr. Edward Pascuitti representing NASA-Goddard Space Flight Center visited the Honeywell Ordnance Division to discuss technical details of this program. Mr. J. T. Lingle, Mr. K. J. Jenson, Mr. G. W. Reiland, and Mr. D. G. Opheim represented Honeywell in these contract discussions.

The coaxial low input voltage converter was demonstrated operating from a laboratory power supply while powering a breadboard regulator circuit. The circuit was operated over a wide input voltage and load range and showed performance characteristics within the design requirements. The converter was also used to power a motor load. Various circuit wave forms and other operating parameters were measured and discussed. The assembly of the low input voltage converter-regulator was examined and weight reduction and improved switching methods were elaborated upon. The design of feedback and power transformers and the effects of various transformer parameters on the low input voltage converter switching characteristics were discussed in more detail. The effects of source parameters, input lead inductance, and loads

were also reviewed. Special considerations in the layout of this coaxial low input voltage converter and in the voltage regulator for minimum external magnetic field disturbance were examined in detail. Current flow patterns in the regulator printed circuit boards were examined for proper current distributions to minimize the generation of magnetic fields.

During this discussion, emphasis was placed upon various means which could be used to improve or enhance the performance, size, and weight of low input voltage converter regulators. The effects of the transistor parameters on the low input voltage converter switching characteristics and the possibility of altering some of the transistor parameters for improved switching performance were discussed.

The direction of work during the next interval and our plans for measurement of magnetic field disturbance were also discussed in detail. It was agreed that circuit design and transformer design are two of the main areas which warrant further exploration for improved device performance and size and weight reduction. Additional technical details and circuit schematics were given to Mr. Pascuitti. It was also agreed that the coaxial low input voltage converter regulator design appears to have considerable merit from the standpoint of magnetic field suppression, radio noise suppression, heat transfer, and weight and size reduction. After completion of tests on this first model, we will fabricate a more sophisticated model for delivery to NASA at the end of this program. Program plans for the next quarter were discussed in detail. The possible testing of low input voltage converter regulators from various energy conversion sources was discussed and the effects of some of the parameters of these sources upon the low input voltage converter regulator were elaborated upon. The actual operation of these low input voltage converters from actual energy conversion sources is deemed to be an important consideration to provide data on possible future operation of these devices in practical space applications.

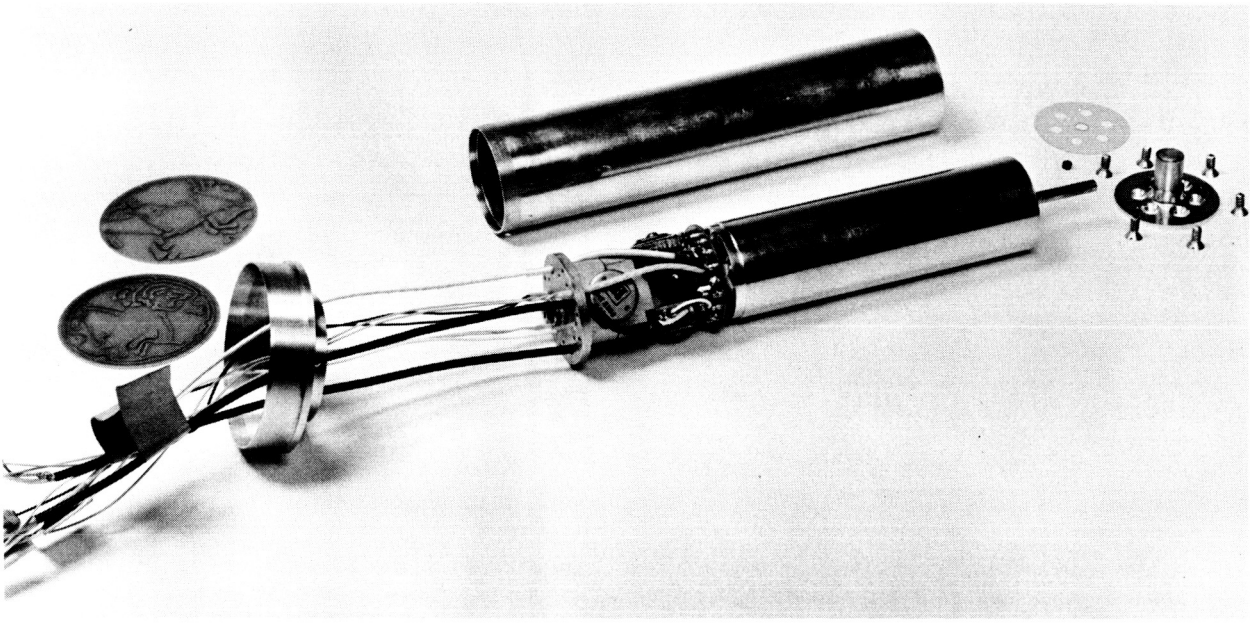

Figure 1 - COAXIAL LOW INPUT VOLTAGE CONVERTER

4

PROJECT DETAILS

A. FABRICATION OF A COAXIAL LOW INPUT VOLTAGE CONVERTER MODEL

DURING THE second quarter, a 50 watt Low Input Voltage Converter-Regulator model was fabricated. The coaxial design used should minimize the external magnetic field disturbance which, in a conventional low input voltage converter, is caused primarily by the high primary currents. This design also provide many other advantages such as suppression of radio noise interference, excellent heat transfer from the power transistors to the outer surface for dissipation by radiation or conduction, and efficient utilization of converter materials so that the high current bus bars actually form part of the converter chassis and enclosure. A photograph of the Low Input Voltage Converter section is shown on Figure 1, a sectional drawing on Figure 2. This design is similar to that described in Progress Report No. 1 on page 7; however, the construction arrangement has been changed to provide better heat transfer from the transistors to the outer surface and to facilitate converter fabrication.

The converter design is best explained by tracing the primary current flow through the device as described on Page 9 and illustrated on Page 10.

First assuming that transistors Q1 and Q2 are conducting, the current flows:

- From the positive input lead down copper rod (1)

- Through the center of power transformer T5 and transformer T1

- Continuing along (1) to emitter bushing (14). ((14) is soldered to (1). The emitters of transistors Q1 and Q2 are soldered to slots in (14).)

- From (14), through the emitter-collector junction of transistors Q1 and Q2, to the transistor clamp (9) and (15). (15) contains tapered surfaces on its periphery and is pressed into a mating surface on the outer tubular coaxial conductor (17). (The tapered joint allows considerable tolerance variation in the piece part diameters and provides a very high pressure electrical connection with a very large surface area in contact.)

- Along (17) to right end bell (4) and on to the negative input (3) to complete the circuit. (Tapered mating surfaces between (17) and (4) provide an excellent electrical joint.)

During the other half of the cycle, transistors Q3 and Q4 are conducting:

- Current flows from the positive input lead to (1), to the right positive junction plate (6). ((6) is soldered to the positive input bus (1) and makes an excellent electrical connection with conductor tube (16) by means of a press fit joint.)

- To the left along (16) to the left positive junction disk (12). (A tapered pressure joint is provided between (16) and (12) to insure excellent electrical contact. (12) is also soldered to inner tubular conductor (11) which passes through the center of the cores of transformers T5 and T1.)

- From (12) into (11), back to the right through the center of the cores of transformers T5 and T1.

- Emerging from the right end of the transformer cores, current flows from (11) to the emitters of Q3 and Q4 which are soldered to (11). (Insulation is provided between (11) and positive rod (1).

- Through the emitter-collector junction of transistors Q3 and Q4 to the right transistor clamp (8).

- From (8) through six brass screws (10) to (4), then out to the negative coaxial input line (3). (Insulation around these six screws precludes the possibility of shorts between (8), (10), and (6). Epoxy glass spacers between (8) and (6) and between (6) and (4) provide the necessary electrical insulation while also providing an excellent thermal path from (8) to the outer surface of (4). Thus, the coupling arrangement provides excellent electrical and thermal paths between (8) and (4).)

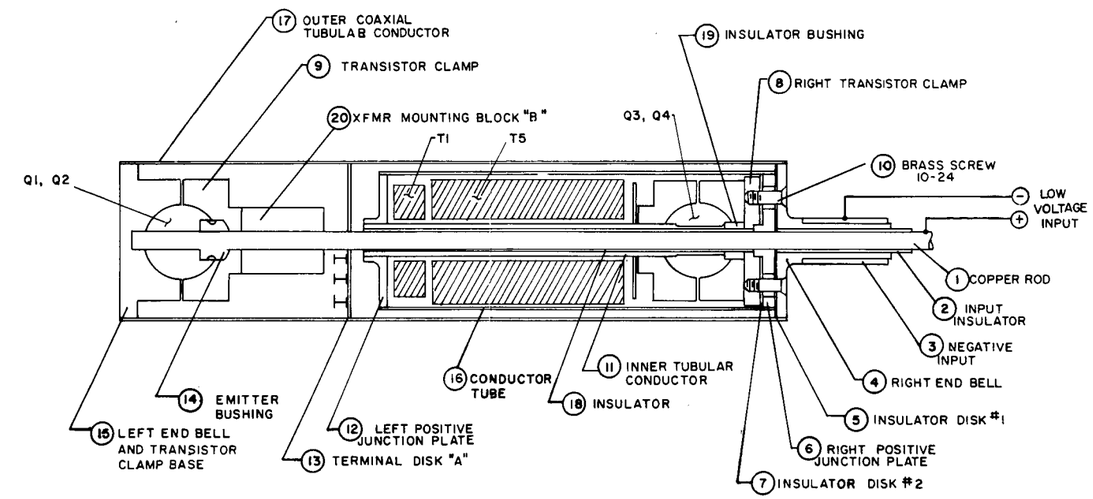

Figure 2 - COAXIAL LOW INPUT VOLTAGE CONVERTER

By way of summary, when transistors Q1 and Q2 are conducting, the current enters (1), passes through the center of transformers T1 and T5, flows into the emitters of transistors Q1 and Q2, passes through the emitter-collector junctions of transistors Q1 and Q2 to (9) and (15), to (17), along (17) back to (4), and then on to (3).

During the other half cycle, the positive input current flows in through (1) to (6), to (16), along the outside of the transformer cores to (12), to (11), along (11) through the center of transformer cores T1 and T5, to the emitters of transistors Q3 and Q4, through the emitter-collector junctions of Q3 and Q4 to (8), through the coupling arrangement by means of six brass screws to (4), and then to (3).

Thus it can be seen that the heavy primary currents have a completely coaxial path in that they pass through the center of the transformer cores once and return on the outer surface of the transformer assembly by means of coaxial concentric tubular conductors. Theoretically, this arrangement should produce zero external magnetic disturbance because the equal and opposite concentric current flow tends to cancel the magnetic fields generated by current flow in each respective direction.

Tubular construction with tapered press fit joints was used in this device to provide large area high pressure joints which allow considerable leeway in the diameter tolerances and tend to diminish the effects of over-all tolerance build up. The transistors are mounted at each end of the device for optimum heat transfer from the transistor collectors to the converter outer cylindrical surface which facilitates excellent heat dissipation by convection, conduction, or radiation.

Conductors (1) and (11) passing through the center of the transformers have been fabricated from copper to provide maximum conductivity. This high conductivity minimizes the necessary conductor cross sectional area required

for efficient conversion of the low voltage, high current power. By minimizing the required cross sectional area of the conductors passing through the center of the transformer, the necessary core window area is also minimized resulting in an over-all reduction of core and total transformer weight. The remaining electrical conductive paths such as the transistor clamps (8) and (9) and the outer conductive tubes (17) and (16) have been fabricated from aluminum which has been tin plated to provide excellent contact surfaces for press fit joints and also soldered joints where applicable. The minimum required wall thickness of the outer tubes is determined by the necessary physical strength of the tube. This minimum wall thickness results in an effective cross sectional area which is more than adequate; thus, high conductivity aluminum was used to realize a weight reduction and to provide greater strength. The concentricity of this device has been held to ± 0. 002 inch.

To minimize the number of leads exiting from the converter, some components such as small signal rectifiers, decoupling transformers, and switching reactors have been mounted inside of this assembly on terminal disk A (13) and the transformer mounting block B (20) . The incorporation of these components inside this assembly greatly reduces the number of lead wires which have to be brought out of the converter and hence tends to reduce the complexity of the lead routing.

The various transformer secondary windings are twisted pairs as they leave the transformer and are terminated at (13) . The terminals on (13) are positioned so that the terminating points for the respective wires carrying equal and opposite currents are very close together. This minimizes the effective current loop capable of generating magnetic fields which do not cancel. The lead wires which then must be brought out of the converter are connected at these terminals and are coaxial or triaxial conductors depending on the magnetic field cancellation requirements of the respective current paths. Therefore, the twisted pairs, terminal spacing, and coaxial output leads minimize the magnetic disturbance which might be generated by the current flowing between the transformer and the voltage regulator and output circuitry. These leads exit at the left end bell (15) and connect to the voltage regulator assembly.

B. FABRICATION OF VOLTAGE REGULATOR ASSEMBLY FOR COAXIAL CONVERTER

The voltage regulator assembly connects to the left end of the tubular converter (Figure 3). The voltage regulator circuit components are assembled on several disks which are connected by long screws and spacers similar to the construction of a typical wafer switch. The germanium transistors and the high speed rectifiers are mounted on a heat sink plate inserted into a cup which connects the converter section to the regulator section. Tapered fits are used between this heat sink plate and the cup housing to guarantee adequate heat transfer from the plate to the outer cylindrical surface where it will be dissipated by conduction or radiation. Two round printed circuit boards are used for mounting the regulator small signal circuitry.

The layout of the printed circuit boards has been directed toward minimization of the external magnetic field disturbance normally caused by currents flowing through the regulator small signal circuitry. A typical printed circuit board is shown in Figure 4. On this board the positive current flows along the circular conductive path which completely encircles the printed circuit. The negative current path also consists of a circular ring inside and in close proximity to the outer positive ring. Since the area enclosed by the positive and negative current paths are nearly equal and the equal and opposing current paths are in close proximity, this will tend to cancel the external magnetic fields.

Also, the complete circular path has been used so that the positive current on entering the printed circuit will be able to flow in both directions around the circular path. If the current flows in only one direction, this would tend to produce a current loop with a resulting magnetic field. However, when the current flows around the loop in both directions, the generated magnetic fields tend to cancel. Therefore, this type of arrangement for both the positive and negative printed circuit buses will tend to minimize the external magnetic

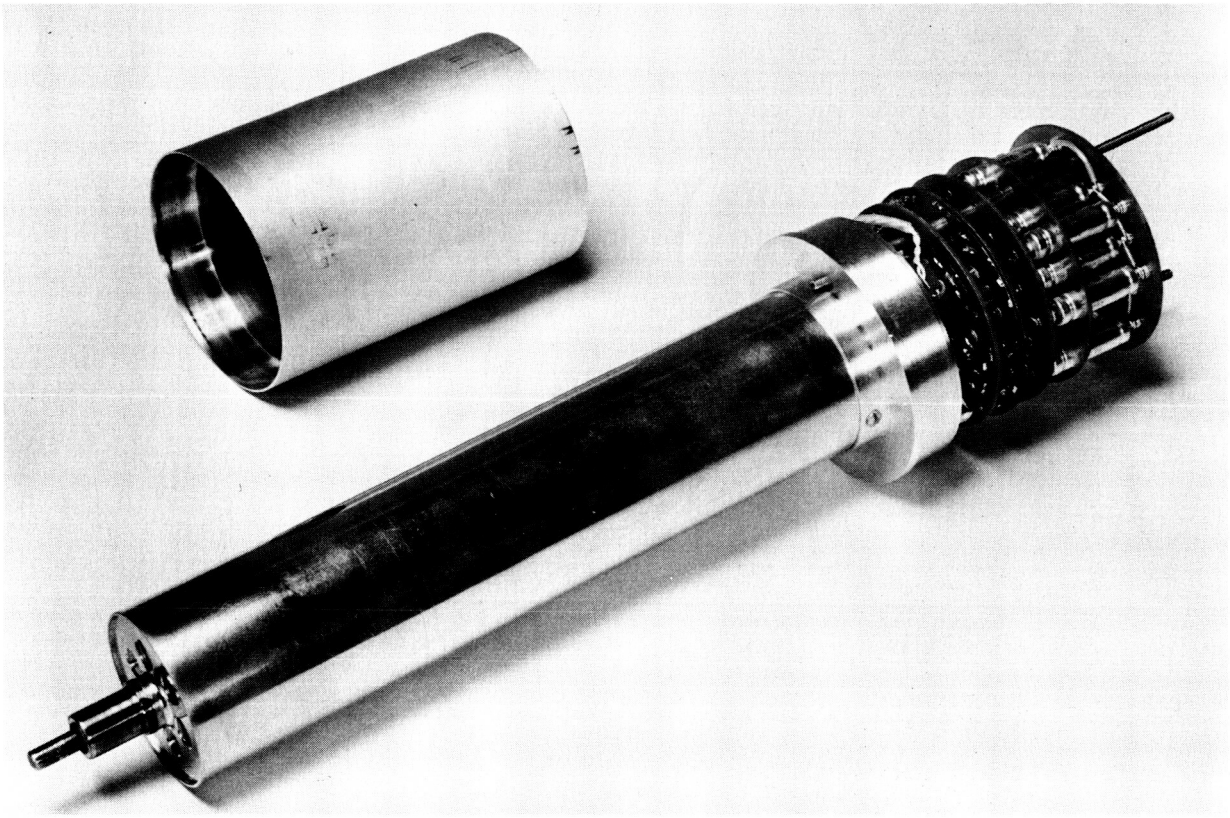

Figure 3 - COAXIAL LOW INPUT VOLTAGE CONVERTER AND VOLTAGE REGULATOR ASSEMBLY

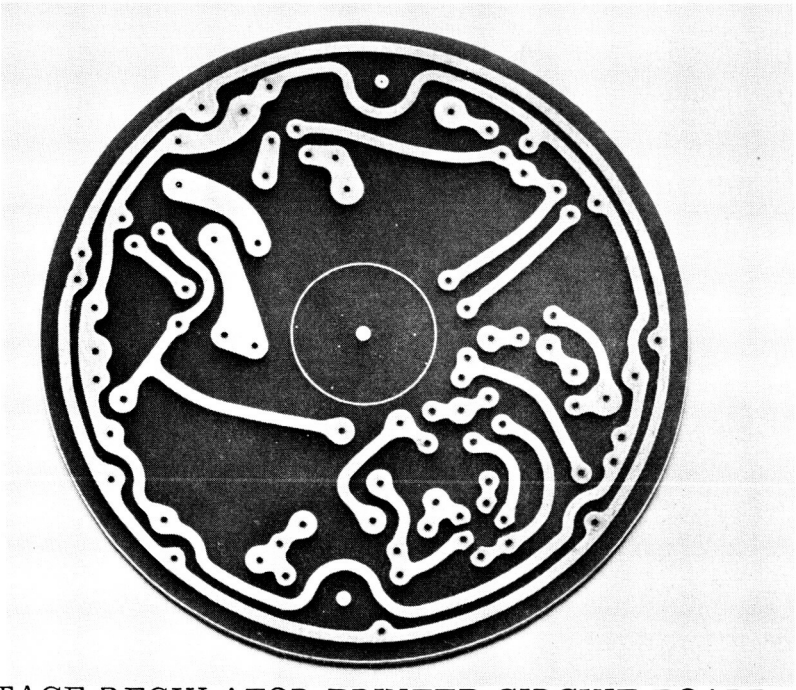

Figure 4 - VOLTAGE REGULATOR PRINTED CIRCUIT BOARD

field disturbance because the current loops are virtually eliminated. The component current flow on this printed circuit board tends to be in a radial direction, since current will flow from the positive circular path radially inward along the component; then connect to various other components; and then return radially outward to the negative circular path. The net radial current flow through the various printed circuit board components should be very small and hence should result in excellent magnetic field cancellation. Thus, in the design of the regulator small signal circuitry, effort has been directed towards minimization of magnetic field disturbance. The effectiveness of this effort will be verified by system tests. Besides minimizing the magnetic field disturbance, this type of construction will in effect, minimize all electro-magnetic field disturbances and hence will also tend to minimize the generation of radio noise interference. In the assembly of this device, effort has been directed towards careful layout of leads and components so that the induced magnetic fields will be minimized. For the heavier secondary current conductors coaxial and triaxial leads have been used to diminish the total magnetic disturbance through any one conductive path. The filter capacitors have also been arranged in a coaxial manner around the choke coil to minimize the magnetic disturbance caused by the conduction of ripple currents through the filter capacitors.

Non-magnetic components have been used where it is feasible or where they have been available at moderate cost. All of the resistors used have non-magnetic construction. Transistors have been ordered which have non-magnetic cases. However, to facilitate completion of this first model, some standard transistors have been used which have magnetic cases and some with non-magnetic cases have magnetic leads.

In the case of components with non-magnetic cases and magnetic leads, the leads will be trimmed as short as possible to reduce the total magnetic moment which might be induced in the component. All of the assembly hardware such as screws, nuts, terminals, clamps, and so forth, have been

fabricated from non-magnetic materials. Prior to the assembly of this device, the power transformer was checked for magnetic field disturbance by running a dc current through the transformer windings and mapping the field around the transformer. Some magnetic disturbance was found in measuring the magnetic field in this manner. We feel, however that this method of testing is not realistic because the magnetic disturbance should be measured with the actual ac currents flowing in the transformer. We intend to run some field mapping tests on this converter very soon to obtain a more realistic approximation of the total magnetic field disturbance. We also intend to separate the converter section and the regulator section so that we can map magnetic field disturbance of each section and determine the disturbance caused by each section. We anticipate performing these preliminary tests prior to making arrangements for more sophisticated tests at a magnetic observatory.

C. MODEL PERFORMANCE

1. Converter - Regulator Efficiency

After fabrication of the coaxial converter section was completed, the converter was operated from a laboratory power supply. Initially a breadboard voltage regulator was used to check the performance of this device. After satisfactory check out, the regulator section was next assembled and joined to the converter. Performance data was then obtained with the coaxial Low Input Voltage Converter section connected to the cylindrical voltage regulator section. Since the output choke coil designed for low magnetic field disturbance has not been fabricated, a standard "C"-core type choke coil was used in the output filter section in place of the planned choke coil having an internal air gap.

This model contains a secondary winding with taps so that it is suitable for use with two different input voltage ranges. Figure 5 shows the model performance (efficiency vs. output power) when connected for the lowest input voltage tap (0.8 to 1.6 volts). Examination of these curves shows that high over-all efficiencies were obtained for this converter-regulator when operating in the 0.8 to 1.6 volt range. The peak efficiency was 82 percent with an input voltage of 1.0 volt and an output power of 27 watts. The performance characteristics are similar to those obtained with previous low input voltage converter-regulators in that at light loads, higher efficiency was obtained with a lower input voltage; at the heavier loads there is a tendency to obtain the higher efficiency with a higher input voltage. There is a tendency for the over-all efficiency to be slightly lower with a higher input voltage because of the higher operating frequency, higher core loss, and because the efficiency of the voltage regulator decreases with increased input voltage. The regulator efficiency diminishes with higher input voltages because the percentage conduction time of the chopping transistor is lower. These curves show that the efficiency is maintained at a high level for output powers between 15 and 50 watts. The converter is also capable of maintaining a relatively high efficiency at output powers much greater than 50 watts (particularly at the higher input voltages). These curves also show that the efficiency is above the design goal of 75 percent for output powers between 19 and 60 watts with input voltages in the 0.8 to 1.4

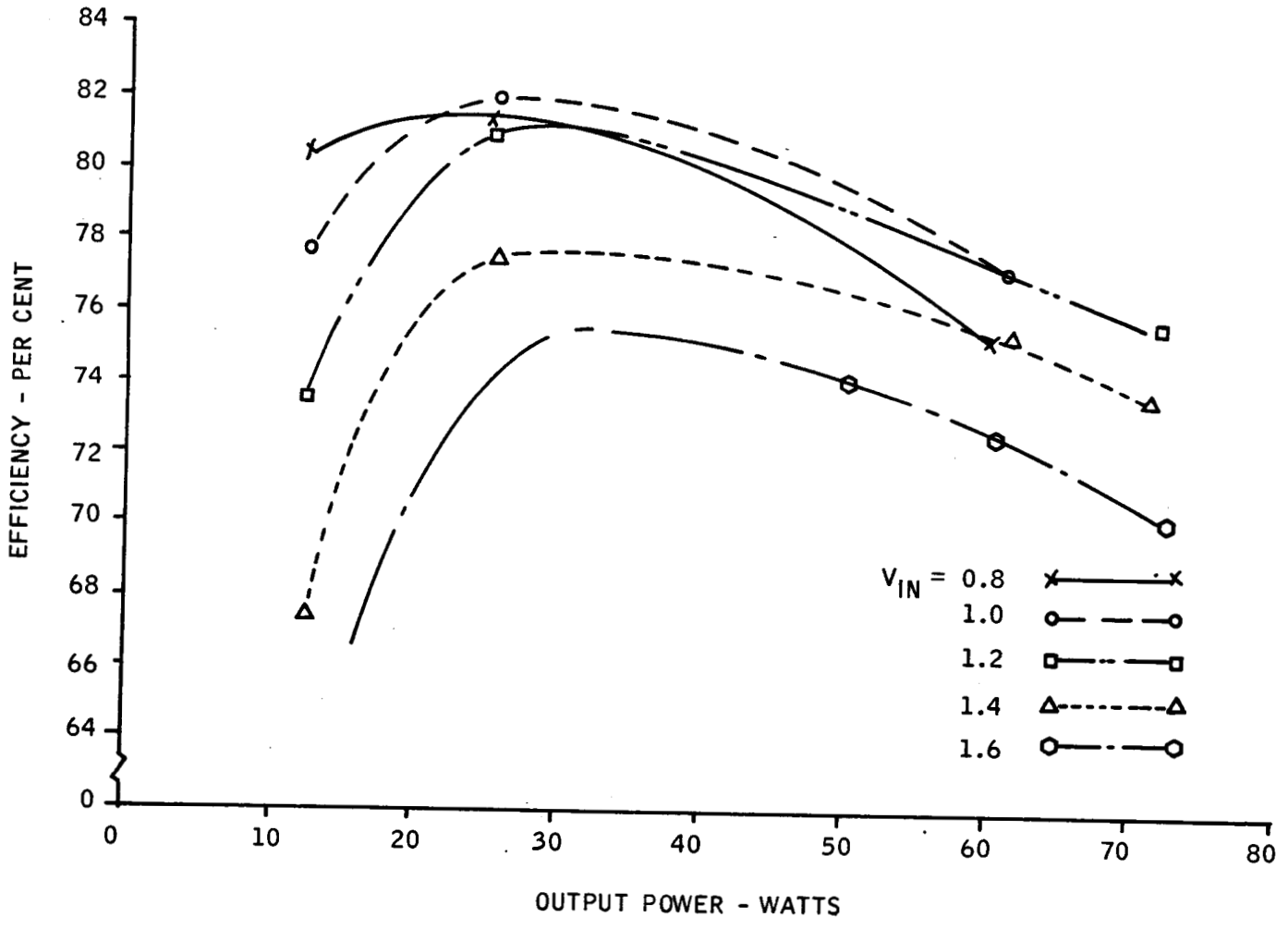

Figure 5 - PERFORMANCE CHARACTERISTICS OF THE COAXIAL LOW INPUT VOLTAGE CONVERTER-REGULATOR (EFFICIENCY VS. OUTPUT POWER)

volt range. The 1.6 volt curve is 1 percent low at the 50 watt point. The performance curves of this low input voltage converter-regulator model have verified that this device in general meets the required design goals for efficiency.

2. Voltage Regulation

The curve on Figure 6 shows that the output voltage remains relatively constant over a load range between 12 and 72 watts. There is a slight variation in the output voltage with input voltage. For example, with an 0.8 volt input the output voltage remained flat at 28.05 volts, at 1.0 volt input the output voltage rose to 28.15 volts and also remained at this level with a 1.2 volt input. As the input voltage was further increased to 1.4 volts, the output voltage declined back to 28.05 volts. This indicates that the regulator started to become slightly overcompensated at input voltages above 1.4 volts. Since the converter-regulator specification is 28 volts ± 0.28 volts, it can be seen that the voltage regulator performance is well within the specification requirements. Figure 7 shows additional voltage regulator performance curves for the odd integers of input voltage, namely 0.7, 0.9, and 1.3. Since the 0.7 volt curve is below the 0.8 volt design minimum, the output voltage is below 28 volts with the voltage regulator fully conducting. Consequently, at a 0.7 volt input, the output voltage tends to decline in a linear manner with load and declines to 24.8 volts at a load of 47 watts. The 0.9 and 1.3 volt curves are flat and constant at a value of 28.15 volts over the 12 to 72 watt load range. The voltage regulator performance data establishes that the low input voltage converter-regulator achieves the designed goals as far as the room temperature voltage regulation is concerned.

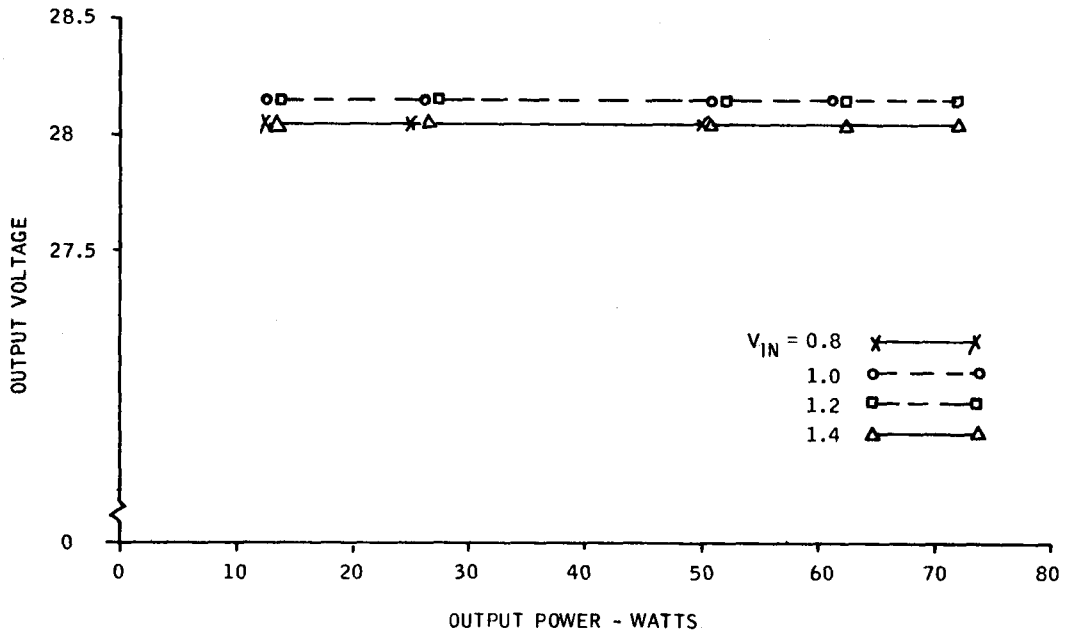

Figure 6 - PERFORMANCE CHARACTERISTICS OF THE COAXIAL LOW INPUT VOLTAGE CONVERTER-REGULATOR (OUTPUT VOLTAGE VS. OUTPUT POWER)

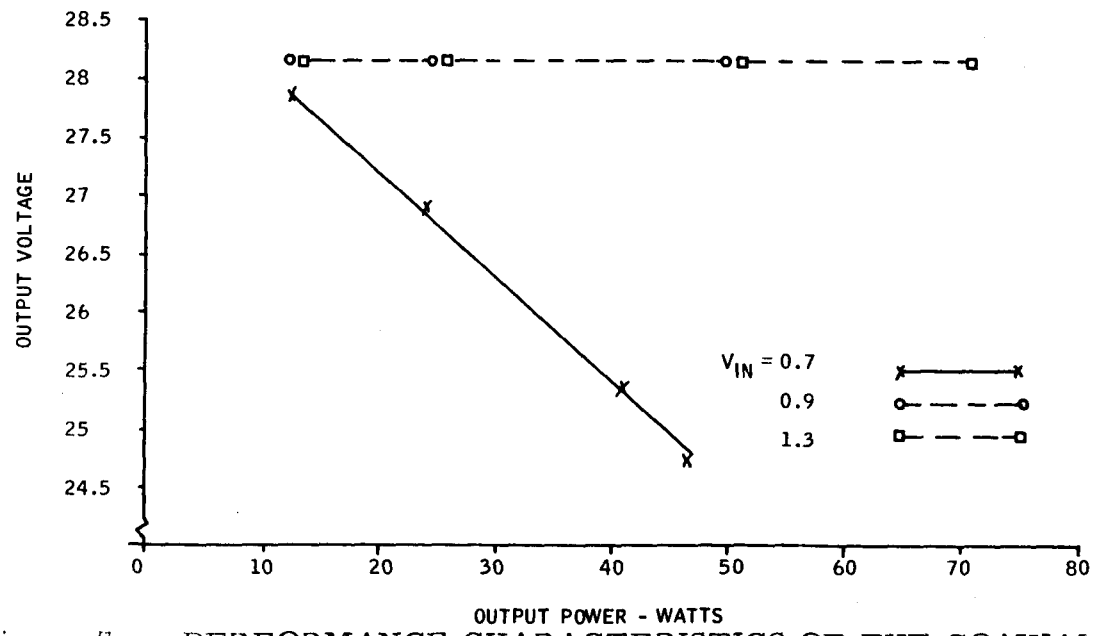

Figure 7 - PERFORMANCE CHARACTERISTICS OF THE COAXIAL LOW INPUT VOLTAGE CONVERTER-REGULATOR (OUTPUT VOLTAGE VS. OUTPUT POWER)

3. Converter Operating Frequency

This low input voltage converter has been designed to operate in the 900 to 2000 cycle range. As explained in previous reports, the low input voltage converter section is designed with a current feedback oscillator which tends to maintain its operating frequency proportional to the input voltage. Thus, at a higher input voltage the operating frequency is higher and this maintains nearly constant operating flux density in the transformer core and tends to prevent saturation of the power transformer.

Figures 8 and 9 show the plot of power oscillator operating frequency vs output power for various input voltages. Figure 8 shows the frequency variation for input voltages of 0.80, 1.2, 1.4, and 1.6. Figure 9 shows the frequency variation for input voltages of 0.7, 0.9, 1.1, 1.3, 1.5, and 1.7. Note that these curves are similar and that the spacing between the various input voltages is approximately equal. The curves show that as the input voltages are increased, the operating frequency also increases. Also, there is a tendency for the operating frequency to rise much more rapidly at lighter load. This rise in operating frequency at light load is caused by the magnetizing current of the interbase choke coil which tends to rob the oscillator of drive at light load and thereby tends to control the frequency. The robbing effect of the interbase choke is diminished as the load is increased because more drive is supplied by the feedback transformer while the interbase choke current remains nearly constant. When the device reaches a load of approximately 25 watts, the interbase choke coil no longer effects the frequency and the switching reactor controls the frequency. The curves show that for loads of above 30 watts, the operating frequency remains relatively constant with load.

The performance data of this coaxial low input voltage converter regulator model as compared with the performance data of a low input voltage converter regulator fabricated under the previous contract (NAS5-3441), shows a considerable increase in performance for our coaxial design. Figure 12 of LOW INPUT VOLTAGE DC TO DC CONVERTER FINAL REPORT [1] shows that the

(1) By, Lingle, J. T., 26 March 1964, Honeywell Inc. ORDNANCE DIVISION, Contract NAS 5-3441.

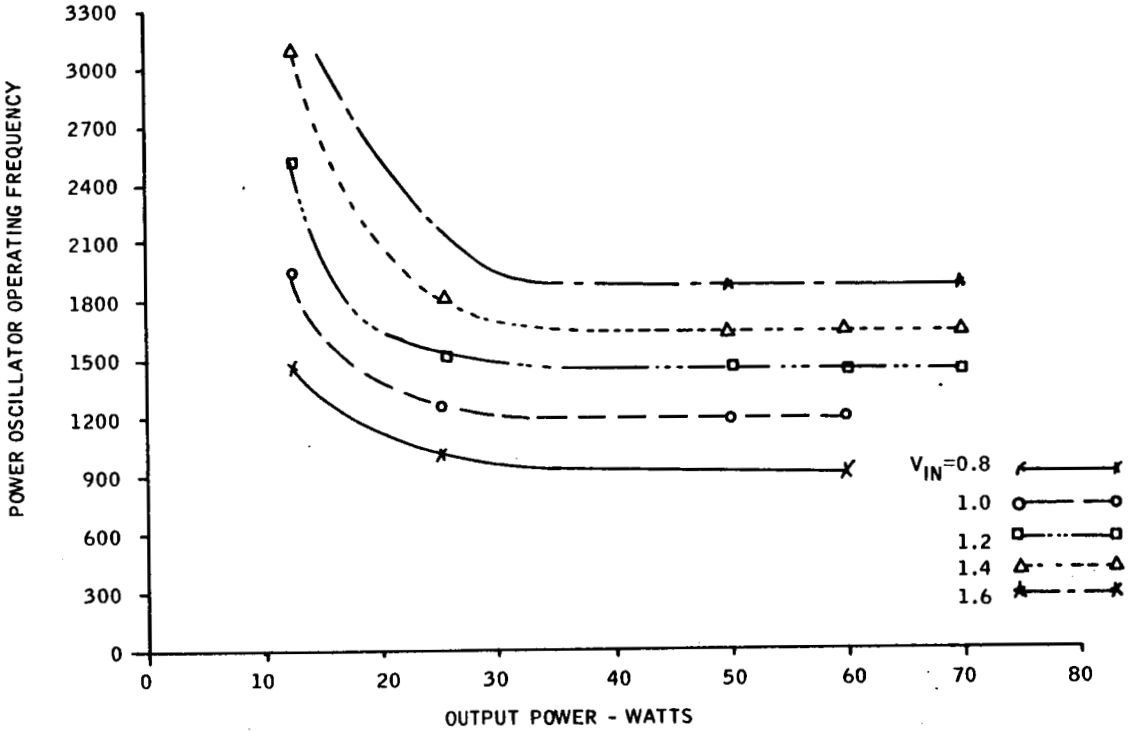

Figure 8 - PERFORMANCE CHARACTERISTICS OF COAXIAL LOW INPUT VOLTAGE CONVERTER (POWER OSCILLATOR FREQUENCY VS. OUTPUT POWER)

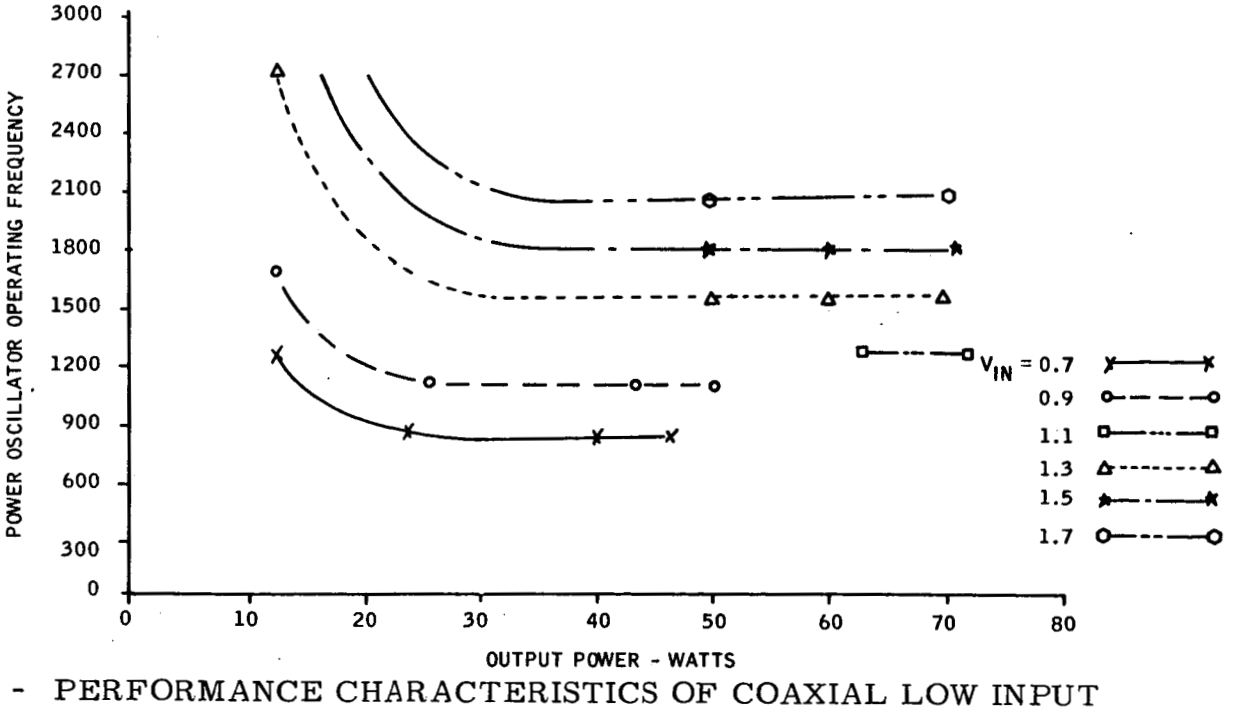

Figure 9 - PERFORMANCE CHARACTERISTICS OF COAXIAL LOW INPUT VOLTAGE CONVERTER (POWER OSCILLATOR FREQUENCY VS. OUTPUT POWER)

maximum efficiency at 50 watts load was approximately 74 percent and the efficiency ranged between 74 and 68 percent at 50 watts load for inputs between 0.8 and 1.6 volts. The performance curves for the new coaxial design (Figure 5) show that the over-all efficiencies at 50 watts load lie between 79 and 74 percent for input voltages between 0.8 and 1.6 volts. Thus, it can be seen that the new coaxial design operates with at least 5 percent greater efficiency in the same input voltage and output power range and it also accomplishes this with lighter over-all weight and less volume because the operating frequency is between 2 and 3 times greater than that of the converter fabricated under the previous contract. The more efficient packaging arrangement also reduces weight and provides other advantages such as minimization of magnetic field disturbance, suppression of radio noise interference, and better heat transfer and heat dissipation. We can conclude from the above performance data that the new coaxial low input voltage converter-regulator design has resulted in substantial performance improvements.

D. MAGNETIC FIELD MEASUREMENTS

Prior to fabrication of the coaxial low input voltage converter some preliminary magnetic field measurements were made on the power transformer when energized with heavy dc currents. The magnetic field was mapped at a distance of 2 inches from the surface of the transformer windings. These measurements indicated that some magnetic field disturbance did exist. However, the dc currents used certainly saturated the magnetic core and it is believed that discontinuities in the core itself could cause the magnetic field disturbance when the core is actually operated in saturation. Because we believe that if the measurements had been made with an ac current passing through the transformer they may have been more meaningful; we intend to make some more preliminary magnetic field measurements on this converter when operating to determine the extent of the magnetic field disturbance. Preliminary negotiations have been conducted with a magnetic testing observatory for measurement of the magnetic field disturbance caused by our coaxial low input voltage converter regulator. We intend to conduct some more preliminary magnetic field measurements in our laboratory so that we can correct any major deficiencies before we test this device at the magnetic observatory. The perming and deperming coils to be used in conjunction with these tests are currently being designed.

E. CIRCUIT DESCRIPTION AND IMPROVEMENTS

The circuit improvements described in progress report No. 1 and a circuit improvement which results in reduced power oscillator transistor switching losses have been incorporated into this model. These improvements consist of the following:

1. An improved switching drive and back bias circuit has been incorporated into the power oscillator to increase the efficiency at higher operating frequencies which allow weight reduction.

2. The use of current feedback drive for the pulse width modulation regulator chopping transistor provides more optimum drive over the input voltage and load ranges to improve the over-all efficiency.

3. A snap-acting transistor back bias circuit has been incorporated with the pulse width modulator to achieve more rapid switching of the chopping transistor and thereby reduce the regulator switching losses.

The circuit description below discusses these improvements in more detail.

1. Power Oscillator Section Description and Improvements

A new current feedback power oscillator switching circuit which was developed under a related program has been incorporated into this model to improve the switching speed of the power oscillator transistors and allow high efficiency operation at higher frequencies. Operation at higher frequencies also results in a significant converter weight reduction.

The circuit diagram is shown on Figure 10. Except for the above changes, the circuit diagram of this coaxial Low Input Voltage Converter-Regulator is very similar to the circuit diagram which was shown on Figure 14 of the LOW INPUT VOLTAGE DC TO DC CONVERTER Final Report on Contract No. NAS5-3441.

The low input voltage power oscillator section consists of a push pull oscillator stage composed of transistors Q1, Q2, Q3, Q4, and transformers T1, T3, T4, and T5. Transformer T5 is the power transformer and transformer T1 provides the current feedback drive to operate transistors Q1, Q2, Q3, and Q4. The oscillator operating frequency is controlled by saturable reactor L1 which couples negative feedback between winding N3 on power transformer T5 and winding N3 on current feedback transformer T1. When reactor L1 saturates towards the end of the cycle, it allows negative feedback from the power transformer to override inherent positive feedback in the current feedback transformer and recycle the circuit. Transformers T3 and T4 are small pulse transformers which serve the purpose of decoupling the transistors for a short interval during switching. Their function is to decouple the switching off transistor from the feedback transformer T1 windings so that the switching off transistor can be back biased to a higher voltage during switching.

The emitter base voltage of the conducting transistor acts like a zener diode clamp and tends to maintain the induced voltage on the T1 windings at a constant value. This establishes a maximum 0. 45 volts on windings N1A and N1B (T1), and would thus normally limit the maximum back bias voltage applied to the switching off transistor to 0. 45 volts. However, when pulse transformers T3 and T4 are incorporated into the circuit, they momentarily decouple the transformer N1 winding from the switching off transistor and allow it to be back biased to a much higher voltage. This momentary high back bias voltage sweeps the stored carriers out of the base region more rapidly to accomplish more rapid switching of the power oscillator. For example, assuming that transistors Q1 and Q2 are being switched off, the current can be traced through pulse transformer T3. (During the previous half cycle, the current flow through the windings of T3 reset its core.)

With transistors Q1 and Q2 switching off and transistors Q3 and Q4 switching on, current will flow from the top half of transformer secondary winding N2(T5) through windings N3 on pulse transformers T4 and T3 and then return through the drive transformer (T6) winding N1A to the rectifier CR18.

The flow of this secondary current through windings N3 (T4 and T3) induces voltages in pulse transformers T4 and T3. This induced voltage in T4 is limited by the low impedance of the secondary circuit composed of winding N4(T4) and the diode clamp CR30. The diode clamp CR30 limits the voltage in N1(T4) to approximately 0. 1 volt in the forward bias direction.

Therefore, the highest voltage will be impressed across the windings on pulse transformer T3 because winding N1(T3) is connected to a high impedance circuit. Thus, the flow of this secondary current through N3(T3) induces a high back bias voltage in N1(T3) because the core of T3 had been previously reset and winding N1T3 is connected to the high impedance which the back biased transistors Q1 and Q2 offer.

This circuitry, therefore, provides a much higher back bias voltage on the emitter base junctions of transistors Q1 and Q2 to rapidly sweep the stored carriers out of the base region and provide much more rapid transistor turn off. Choke coil L2 also maintains its previous current flow and tends to drive current into the bases of transistors Q1 and Q2. This provides an additional source of back bias current to accomplish more rapid switching. Choke coil L2 also draws current out of the bases of transistors Q3 and Q4 while they are switching on and this tends to provide an initial over drive to switch these transistors on rapidly.

The more rapid switching afforded by this power oscillator increases the converter efficiency and allows higher frequency operation because the switching losses are diminished. The resultant higher operating frequencies allow the weight of the power oscillator stage to be reduced considerably. Although this power oscillator in normally self starting, a starting oscillator is also provided which will start the converter under all environmental conditions. This consists of transformer T2, transistor Q5, diodes CR7, CR8, CR9, capacitor C1, and resistor R1. Once the power oscillator has started, a bias voltage is provided by winding N4(T5) and diodes CR8 and CR9 to turn off the starting oscillator so that it will no longer draw power from the line. If the power oscillator should stop oscillating, the starting oscillator would again initiate and provide starting pulses to kick the power oscillator back into operation.

The coaxial construction and the coaxial input lead used with this model greatly reduces the inductance of the primary circuit and the input leads. This reduction in input inductance greatly diminishes the generation of voltage spikes at the converter input when the power oscillator switches. Minimization of these input voltage spikes reduces the oscillator transistor voltage current product during switching and consequently reduces the converter switching losses. Thus the coaxial design tends to reduce switching losses which enhances the performance at higher operating frequencies.

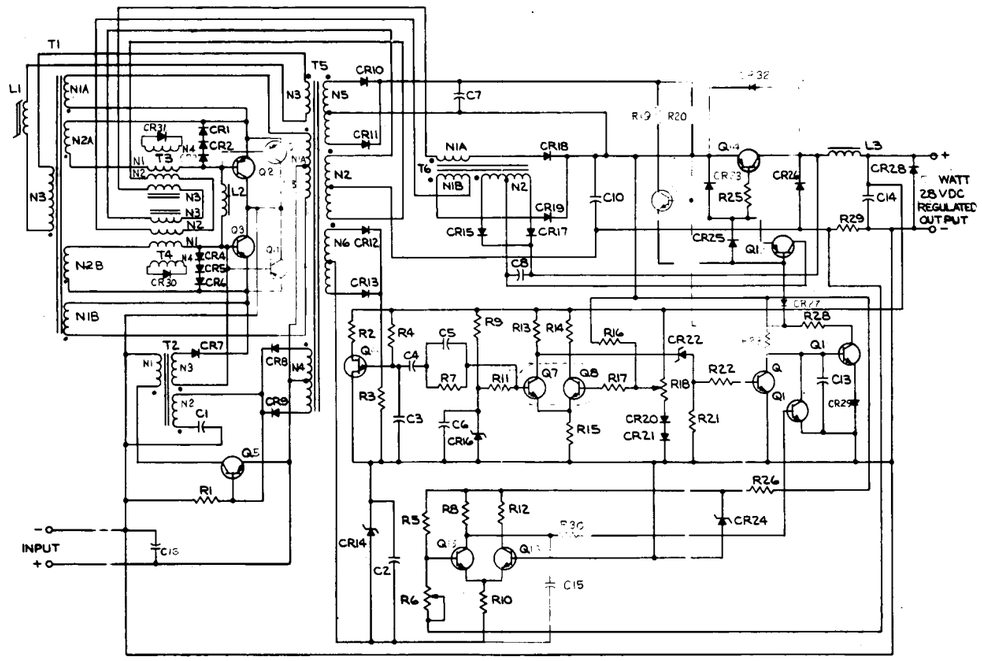

Figure 10 - CIRCUIT DIAGRAM FOR 50 WATT LOW INPUT VOLTAGE CONVERTER-REGULATOR

2. Voltage Regulator Description and Improvements

The small signal circuitry incorporated in the voltage regulator is similar to the circuitry used on the model fabricated under contract NAS5-3441; however, the circuit improvements described in Progress Report No. 1 of this contract have been incorporated into the model. These circuit improvements provide more optimum forward drive and a better back bias voltage for the pulse width modulator chopping transistor Q14. The more optimum current drive, proportional to load, is provided by an arrangement consisting of transformer T6, rectifiers CR15 and CR17, capacitor C8, and resistor R25 This current drive circuitry provides the following advantages:

Because the current drive circuit eliminates the need for current limiting resistors, dissipation is reduced and regulator efficiency is improved. This current drive provides the optimum drive over the load range and eliminates the problems of excess drive at high input voltage, light load, and insufficient drive at low input voltage and heavy load conditions. Because the previous voltage drive arrangement had to be designed for the most severe load and input voltage conditions, excess drive resulted under most of the other conditions. An analysis showed that a voltage regulator failure mode previously could occur under some overload conditions because transistor Q14 did not receive sufficient drive and would come out of the saturation region. It would then operate with excessive dissipation and result in damage to the transistor. Thus in the previous regulator circuit some failures could occur under overload particularly with a very low input voltage which would not supply sufficient drive to the pulse width modulating transistor Q14. With the present current drive circuit, sufficient drive is maintained even under overload and low input voltage conditions so that transistor Q14 will be operated in the saturation region under the most severe overload conditions. This greatly improves the regulator reliability by removing a previous possible mode of failure.

The operating efficiency of chopping transistor Q14 has been improved by providing a more optimum back bias signal. This improved back bias circuit can turn Q14 off more rapidly and thereby reduce its switching losses. This was discussed in Progress Report No. 1. The new back bias circuit consists of resistors R19, R20, diode CR27, and transistor Q12. When chopping transistor Q14 switches on, transistor Q12 switches off the back bias power and thereby removes the back bias power flow to transistor Q14 when it is conducting. However, when transistor Q14 is switched off, transistor Q12 is gated on and applies a higher back bias voltage from capacitor C7 to transistors Q14 and Q13 base emitter junctions. The higher power available from the low impedance source (C7) switches transistor Q14 off more rapidly to reduce the turn off losses. The higher back bias current flowing can remove the stored carriers from the base of Q14 quickly and switch it more rapidly. Since this arrangement removes the back bias signal when transistor Q14 is gated into conduction, this also diminishes the amount of current that transistor Q13 must conduct because it no longer has to handle both the forward bias drive and the back bias drive simultaneously. Therefore, the drive power for transistor Q13 can also be reduced. The remaining portion of the regulator circuit is similar to that used previously. Unijunction transistor Q6 is the active component in an oscillator which provides a dither signal to the differential detector Q7, Q8, and controls the chopping frequency of the regulator. The differential detector operates upon the coincidence of the reference signal from zener diode CR16, the ramp signal from the dither oscillator, and the output voltage sample from potentiometer R18. The output error signal from the collector of differential detector transistor Q7 is applied through zener diode CR22, and resistor network R21 and R22 to the base of transistor Q9. Transistor Q9, Q11, and Q13, form a three stage amplifier which amplifies the basic error and dither signal to provide the pulse width modulation gate control for chopping transistor Q14. The high gain of this amplification network assures very rapid switching of transistor Q14 and it also assures very tight voltage regulation.

3. Overload Protection Circuit Description

The overload protection circuit senses the overload current flow through resistor R29 by means of a differential detector consisting of Q15 and Q16. This circuit is biased so that transistor Q15 is normally conducting more than Q16. The bias is provided by resistors R5, R6, and R29. Resistor R6 can be adjusted to control the overload set point. When an overload occurs, transistor Q16 begins to conduct more heavily and at the preset level, it will diminish the conduction of transistor Q15 and apply a positive voltage to the base of transistor Q10. When Q10 conducts it shuts off the pulse width modulator. This circuit has a very fast response and will rapidly shut off the pulse width modulator during overload, and thus protect the converter and the output circuit from overloads. This circuit is a current limiting circuit and hence under overload or short circuit, the output current will be maintained at a prescribed overload current level. The characteristics of this circuit work very well with battery charging loads and motor loads which may draw initial overloads when starting or accelerating. The circuit functions for either slowly increasing overloads or sudden dead shorts. Also, the circuit will recover immediately when the overload is removed and will be capable of supplying full power to the output whenever the overload is removed.

Preliminary checkout of this model has shown that the overload current limiting circuit set point tended to drift when the converter was operated with the regulator cover on. Investigation disclosed that because transistor Q16 was mounted too close to a power resistor, the temperature of this half of the differential defector increased and caused the set point drift. This will be corrected next quarter by relocating transistor Q16 so that both Q16 and Q15 are in close proximity and in thermal equilibrium. The use of two transistors in a common can may also be considered.

F. RELIABILITY CALCULATIONS

During the last quarter, stress analyses were conducted on the Pulse Width Modulator (PWM) regulator section. The purpose of the analyses was to reveal any circuit parameters that were marginal for reliable circuit operation under worst case conditions and to mathematically verify the reliability of the circuit design under these worst case conditions. The integral circuits of the PWM section analyzed included the pulse width control circuitry, the chopping transistor and directly related drive circuitry, and the overload protection circuit. Each analysis took cognizance of the following:

(1) The transistor parameter variations over the temperature range (primarily transistor current gain).

(2) The transistor parameter variations in a lot shipment.

(3) Variations in applied voltages due to input voltage and load variations.

(4) Variations in circuit resistances.

(5) Power and voltage ratings of the individual components.

The results of the analyses indicated the PWM circuit design will operate reliably under the worst case conditions considered. Additionally, methods were considered to increase the margin of safety realized. (Sample calculations are shown in Appendix A.) These calculations verify the reliability confidence level of the PWM regulator section which is of special significance in space applications.

5

CONCLUSIONS

THE FABRICATION of the first coaxial low input voltage converter-regulator has been completed. Initial performance tests have verified that this design incorporating several circuit improvements has resulted in a substantial increase in over-all efficiency with improved voltage regulation while realizing a significant size and weight reduction when compared to the model delivered under the previous contract (NAS5-3441).

The performance curves show that the coaxial low input voltage converter-regulator operates at efficiencies above the 75 percent design goal for input voltages between 0.8 and 1.4 volts throughout a 20 to 60 watt load range. The efficiency at rated load is approximately 5 percent higher than that which had been obtained with the previous model fabricated under Contract NAS-5-3441. The converter contains a set of taps on the output transformer for two different input voltage ranges (0.8 to 1.6 volts and 1.2 to 1.8 volts). When connected for the lower input voltage range the efficiency at the 1.6 volt input declines to 74 percent at 50 watts load. This is caused by the reduction in the

percent conduction time of the pulse width modulation voltage regulator with higher regulator input voltages. If the higher input voltage range taps are used the efficiency at 1.6 volts input will be higher than 75 percent at 50 watts load.

The higher efficiency obtained with this coaxial model is due to the following:

(1) An improved current drive power oscillator switching circuit which provides higher instantaneous back bias current to the switching "off" transistor to decrease the turn off time. This increases the oscillator switching speed, reducing switching losses, and thereby provides a substantial efficiency increase even at higher operating frequencies.

(2) The incorporation of current drive for the chopping transistor in the voltage regulator provides a more optimum drive over the load and input voltage range to increase the regulator efficiency.

(3) An improved back bias circuit for the PWM chopping transistor has increased efficiency by reducing this transistor's switching losses.

(4) The coaxial construction reduces the effective input inductance of the converter which thereby reduces the voltage spikes generated during switching. This reduces the voltage impressed across the transistors during switching and improves the efficiency by diminishing switching losses.

The converter voltage regulation has been improved over the previous model. Circuit measurements show that the output voltage remains nearly flat with load and shows very little change with input voltage. The regulation is considerably less than the ± 1 percent maximum required. The improved regulation is due to recent circuit changes, a reduction in lead length by the use of printed circuit boards, and a differential detector composed of a matched pair of transistors in a single case. This unit will be checked over the environmental temperature range during the next quarter to verify the adequacy of the voltage regulator design.

The overload current protection circuit has also been checked and found to perform satisfactorily when the regulator cover is off. However, with the cover on, a minor temperature drift problem exists in the present model due to the placement of one of the small signal differential amplifier transistors too close to a power resistor. This results in unequal ambient temperatures on the two transistors comprising the differential amplifier and therefore results in unequal temperature compensation for a specified environmental temperature. It will be necessary to relocate this transistor in order to maintain a stable overload set point when the device is enclosed and operated at the temperature extremes. This problem may also be eliminated by utilizing a matched pair of transistors in a single case for the differential detector.

The weight and volume of this converter model has been decreased by operating the power oscillator in the 900 to 2,000 cps range (which represents an increase of 200 to 400 percent over previous models) and by the use of coaxial construction. The circuit improvements resulted in a decrease in switching losses which have allowed more efficient operation at these higher frequencies. The higher operating frequencies result in a considerable reduction in the size and weight of the transformers, reactors, filter capacitors, and the container. The low input voltage converter section of this design weighs 3.1 pounds and the regulator and filter section weight is estimated at 1.5 pounds. The volume of the coaxial low input voltage converter section is 37 cubic inches and the volume of the regulator section is 48 cubic inches. The coaxial construction has been especially effective in realizing the volume reduction.

Examination of the circuit wave forms has shown that the use of a coaxial input lead decreases the input voltage spikes which are normally caused by input lead inductance during switching. The reduction of these voltage spikes decreases the converter switching losses, and improves reliability by diminishing the oscillator transistor power dissipation and voltage stress during switching.

Some preliminary magnetic field measurements performed during fabrication of the model were inconclusive. Further preliminary magnetic field measurements will be made next quarter to determine if the magnetic suppression appears adequate or whether modifications will be necessary prior to the testing of this device for magnetic field disturbance at a magnetic observatory. Environmental tests planned for the next quarter will determine what modifications may be desireable to realize an optimum design.

The initial performance tests on this unit have proven that the recent circuit improvements and the coaxial converter design have provided an increase in the low input voltage converter-regulator performance with a substantial reduction in converter size and weight. Further environmental and magnetic field disturbance testing should verify the adequacy of this device for use in conjunction with energy conversion source electrical power systems for future space applications.

6

PROGRAM FOR THE NEXT QUARTER

THE COAXIAL power oscillator will be subjected to more complete environmental and operational tests.

Also, the results of some preliminary magnetic field measurements will be examined to determine if the design should be altered to provide more perfect magnetic suppression. After this objective has been completed, the low input voltage converter regulator will be taken to a magnetic observatory and given a more thorough test for external magnetic field disturbance.

Investigations will continue on methods of improving the switching speed of the power oscillator and of improving the voltage regulator section.

7

APPENDIX A

Analysis of Pulse Width Modulations Regulator Chopping Transistor Circuitry

THE FOLLOWING calculations were made to insure reliable circuit operation of the regulator chopping transistor and directly related drive circuitry (Figure 11) under worst case conditions. The worst case conditions assumed are as follows:

Ambient Temperature = + 14°F

The minimum ambient temperature for this model is -10°C (+14°F).

Output Current (I_L) = 3 amperes

(Slight Overload Condition)

Input Voltage to Chopping Transistor (V1) = 26 volts

Semiconductor parameters (See Figure 11)

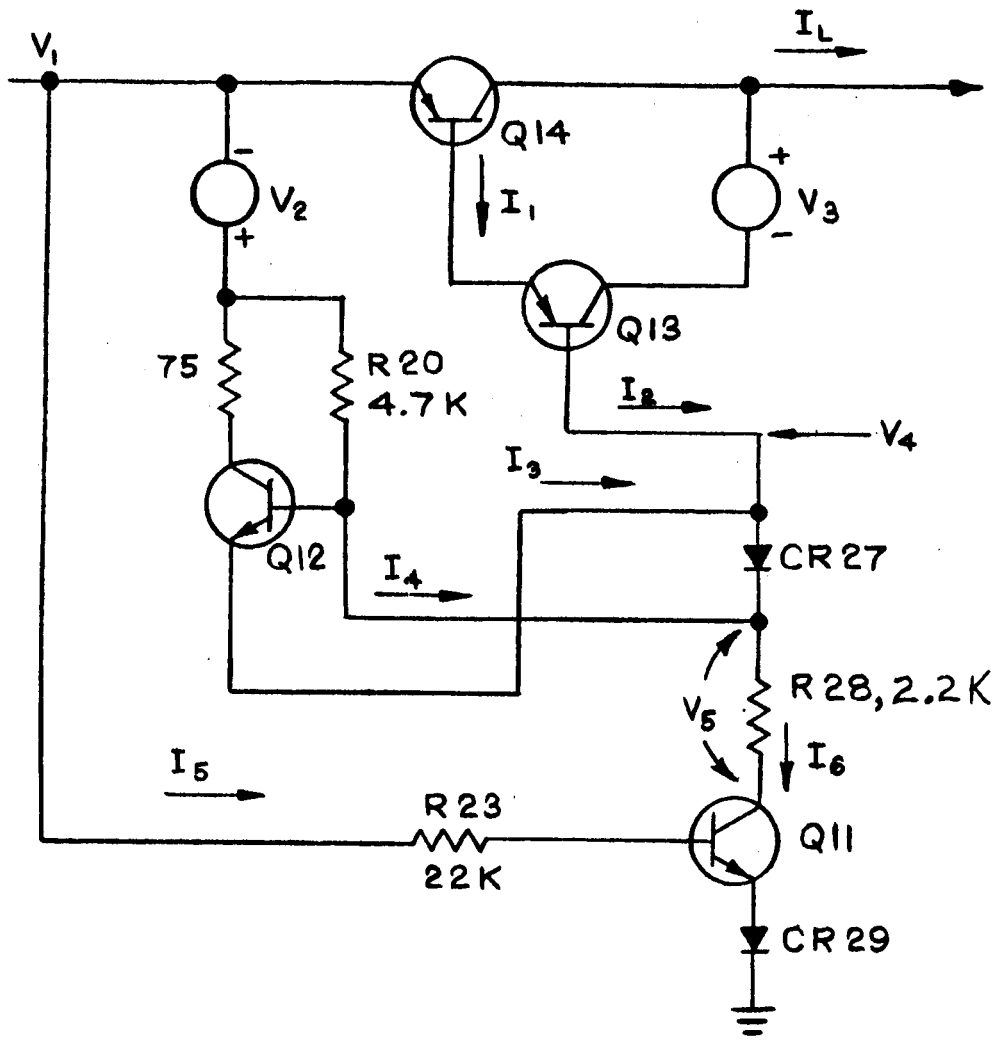

Figure 11 - CIRCUIT DIAGRAM OF PULSE WIDTH MODULATOR CHOPPING TRANSISTOR AND DIRECTLY RELATED DRIVE CIRCUITRY

Part	β	$V_{EB(SAT)}$	$V_{CE(SAT)}$	V_f
Q14	25 (I_C = 3 amps)	0.75	----	----
Q13	15 (I_C = 120 ma)	0.5	----	----
Q11	20 (I_C = 10 ma)	1.0	1.0	----
CR27, CR29	----	----	----	1.0

V2 (a function of input voltages)

V3 is a load current dependent voltage and adjusts for specific load conditions.

To minimize power dissipation in Q14 and Q13, it is necessary to insure saturation of them under the conditions stated.

For saturation of Q14

$$i1 \geq \frac{I_L}{\beta 14} = \frac{3}{25} = 120 \text{ milliamps}$$

For saturation of Q13

$$i2 \geq \frac{i1}{(\beta 13 + 1)} = \frac{120 \text{ ma}}{15 + 1} = 7.5 \text{ ma}$$

$$V4 = V1 - V_{EB14} - V_{EB13} = 26 - 0.75 - 0.5 = 24.75 \text{ volts.}$$

$$V4 = V1 + V2 - i\,4\,R20 + V_{f\,27}$$

$$i4 = \frac{-V4 + V1 + V2 + V_{f27}}{R20} = \frac{-24.75 + 26 + 8 + 1}{4.7 \times 10^3} = \frac{10.25}{4.7 \times 10^3} = 2.18 \text{ ma}$$

$$i6 = i2 + i4 \geq 7.5 + 2.18 = 9.68 \text{ ma}$$

Consider Q11

$$V1 - i5\ R23 - V_{EB11} - V_{f29} = 0,\ i5 = \frac{26 - 1.0 - 1.0}{22K} = 1.09 \text{ ma}$$

$$\beta 11\ i5 = 21.8 \text{ ma},\quad i6 < \frac{V1}{R28} = \frac{26}{2.2K} = 11.8 \text{ ma}$$

Thus $\beta 11\ i_{b11} > i_{C11}$ and saturation is assured.

Considering the current limiting of R28

$$V5\ (MIN) = i6\ (MIN) \times R28 = 21.4 \text{ volts}$$

$$V5 = V1 - V_{CE11} - V_{f27} - V_{f29} - V_{EB14} - V_{EB13} = i6 \times R28 \geq 21.4 \text{ volts}$$

$$V5 = 26 - 1.0 - 1.0 - 1.0 - 0.75 - 0.5 = 21.75 \geq 21.4 \text{ volts}$$

Therefore R28 is small enough to insure saturation of Q14 and Q13 under the worst case conditions assumed.

In order to maintain a safety margin under these worst conditions it is desired that the minimum gain (β) of Q13 be greater than 20 (at +14°F and I_C = 120 ma) or that R28 be decreased. It should be noted that decreasing R28 results in more power dissipation in it and therefore it is more desireable to meet the minimum gain requirement of Q13 stated.