FACILITY FORM 602

N65 17217
(ACCESSION NUMBER)

(THRU)

46
(PAGES)

1
(CODE)

CR 60761
(NASA CR OR TMX OR AD NUMBER)

31
(CATEGORY)

GPO PRICE $

OTS PRICE(S) $

Hard copy (HC) $2.00

Microfiche (MF) $0.50

RE-ORDER NO. 63-620

SURVEYOR LABORATORY
HUGHES AIRCRAFT COMPANY
SPACE SYSTEMS DIVISION

SURVEYOR/CENTAUR AIR CONDITIONING TEST PLAN

1 September 1963

This work was performed for the Jet Propulsion Laboratory, California Institute of Technology, sponsored by the National Aeronautics and Space Administration under Contract NAS7-100.

PREPARED BY:

H.C. Cloud
Project Engineer
Launch Operations Section

R.R. Weiss
Launch Operations Section
Ctr. # 950045

APPROVED:

R. A. Smith
Head, Launch Operations Section

W.G. Richardson
Assistant Manager
Mission Operations Department

NUMBER 223468	
REVISION	MODEL
PAGE i OF 41 PAGES	
CUSTOMER CONCURRENCE	

116

TABLE OF CONTENTS

		Page
	INTRODUCTION	iii
1.	TECHNICAL DATA	1
	1.1 General Air Conditioning Test Description.	1
	1.2 Test Objectives and Criteria . . .	1
	1.3 Configuration	6
2.	EQUIPMENT REQUIREMENTS	8
	2.1 GD/A Supplied Equipment	8
	2.2 HAC Supplied Equipment	9
3.	TEST PROCEDURES	16
	3.1 Test Responsibilities	16
	3.1.1 GD/A Responsibilities . . .	16
	3.1.2 HAC Responsibilities . . .	16
	3.2 Test Preparation Sequence	16
	3.3 Air Conditioning Test Runs . . .	17
	3.4 TV Illumination Test	20
	3.4.1 GD/A - Furnished Equipment . .	21
	3.4.2 HAC - Furnished Equipment . .	21
	3.5 Surveyor/Centaur Road Test . . .	21
4.	TEST SUPPORT REQUIREMENTS	22
	4.1 Instrumentation	22
	4.1.1 Recorders	23
	4.1.2 Data Evaluation	23
	4.2 Services	23
	4.3 Photographic Support	30
5.	DOCUMENTATION REQUIREMENTS	40
	5.1 Integrated Test Plan	40
	5.2 Test Procedures	40
	5.3 Test Evaluation Reports	40
6.	APPLICABLE DOCUMENTS	41

2

LIST OF ILLUSTRATIONS

Figure		Page
1.1	Joint HAC-GD/A Air Conditioning Test PERT Analysis	4
1.2	Joint HAC-GD/A Air Conditioning Test . . .	5
1.3	Power and Heater Control Panel	7
2.1	Surveyor Air Conditioning Unit Test Setup . .	13
2.2	Heat Source Arrangement	14
2.3	Main Retro Rocket Handling Procedures . .	15
4.1	Instrumentation Layout for Surveyor Air Conditioning Test	25
4.2	Location of Temperature Sensors on Surveyor Retro Rocket and Vernier Engine System Propellant Tank	26
4.3	Temperature Sensors and Pressure Transducer Locations on Main Retro Rocket	27
4.4	Temperature Sensor Locations for all Propellant Tanks	28
4.5	Working Space Requirements for Spacecraft Encapsulation Operation	29

LIST OF TABLES

Table No.		Page
1.1	Thermally Critical Spacecraft Subsystems . .	3
2.1	General Dynamics/Astronautics Supplied Equipment	11
2.2	Hughes Aircraft Company Supplied Equipment .	12
4.1	Centaur/Surveyor Air Conditioning Test Instrumentation Requirements (Temperature Measurements)	31
4.2	Centaur/Surveyor Air Conditiong Test Instrumentation Requirements (Pressure Measurements) . .	37
4.3	Centaur/Surveyor Air Conditioning Test Instrumentation Requirements (Flow Rate Measurements)	39

INTRODUCTION

Requirements for the Surveyor/Centaur Air Conditioning Test are defined in this document. Detailed procedures will be published prior to this test.

Preliminary tests will be performed to insure that there is proper mechanical mating of the GD/A air conditioning unit to the GD/A nose fairing. During the five week period following the preliminary tests, the spacecraft thermal model will be utilized to conduct air conditioning tests. These tests will determine the effectiveness per specific HAC requirements of the ducting inside the nose fairing, and the capabilities of the GD/A designed air conditioning unit.

All tests will be performed at the Hughes Aircraft Company, El Segundo Facility.

1. TECHNICAL DATA

1.1 General Air Conditioning Test Description - The Centaur/Surveyor air conditioning test will consist of a series of comprehensive system test runs of the GD/A air conditioning configuration designed for controlling the temperature environment of the Surveyor Spacecraft during AMR launch complex operations. The purpose of the test is to determine the effectiveness of the internal air flow distribution in maintaining each power dissipating system and temperature critical component on the spacecraft at its required temperature. The test will be conducted with the full-scale Centaur/Spacecraft test article at Hughes Aircraft Company facilities in El Segundo, California.

A PERT analysis of the air conditioning tests is shown in figure 1.1 and the test schedule is shown in figure 1.2.

1.2 Test Objectives and Criteria - The major air conditioning test objectives are as follows:

a. Determine if the airborne ducting (and associated air nozzles) mounted in the nose fairing and spacecraft adapter assemblies are of proper design, location, and orientation to provide air distribution in required quantities and directions to maintain Surveyor thermally critical subsystems within specified temperature tolerances (reference Table 1.1).

b. Demonstrate that the GD/A-designed Surveyor air conditioning (ground) unit is capable of furnishing air at the required quantities and temperatures necessary to satisfy spacecraft air conditioning demands throughout the full range of ambient thermal exposure environments which the encapsulated Surveyor assembly potentially could experience during AMR launch stand operational activities.

1.2 (Continued)

c. Determine the optimum location for the airborne temperature-control sensor used for control of the Surveyor ground unit during on-stand air conditioning operations at AMR.

d. Obtain thermal transient response data on the spacecraft thermally critical subsystems following start-up and shut-down of the air conditioning unit under varying ambient conditions.

e. Obtain data on the A/C ground unit with respect to control response and stability of control under normal operating conditions and under simulated control sensor failure conditions.

f. Obtain data on the effects to the thermal environment in the area of the Centaur electronic equipment shelves resulting from combined Centaur and Surveyor air conditioning air flows merging in this compartment.

Table 1.1 Thermally Critical Spacecraft Subsystems

Spacecraft Subsystem	Acceptable Temperature Range (°F)	Reason for Specific Temperature Range
1. Compartments A and B Radiators A - 2.84 ft^2 B - 1.99 ft^2	0 to 95*	Maintain electronics and batteries mounting surface temperature in range 0 to +125°F for nominal compartment dissipating levels.
2. Inertial Reference Unit (IRU) Radiator Radiator Area - 0.27 ft^2	130 to 155	Maintain IRU Gyros at 180°F ± 5°F. The radiator temperature range accounts for the capacity of the gyro auxiliary heaters.
3. Flight Control Electronics (FCE) Radiator Radiator Area - 0.90 ft^2	0 to 95	Maintain electronics mounting surfaces to < +125°F during operation on coast phase power.
4. Main Retro Engine Propellant	85 ± 5 at launch	Relates to thrust dependency on temperature at ignition and system trade-off between retro performance and vernier system fuel requirements.
5. Vernier System Fuel and Oxidizer tanks	80 to 100 at launch	To establish minimum required internal energy level in propellant for succesful application of passive thermal control. Oxidizer temperature must be > -10°F at terminal descent.

* An acceptable deviation from the upper temperature limit exists when peak dissipations are encountered during high power transmitter operation in Compartment A, and high load demands on the Boost Regulator in Compartment B.

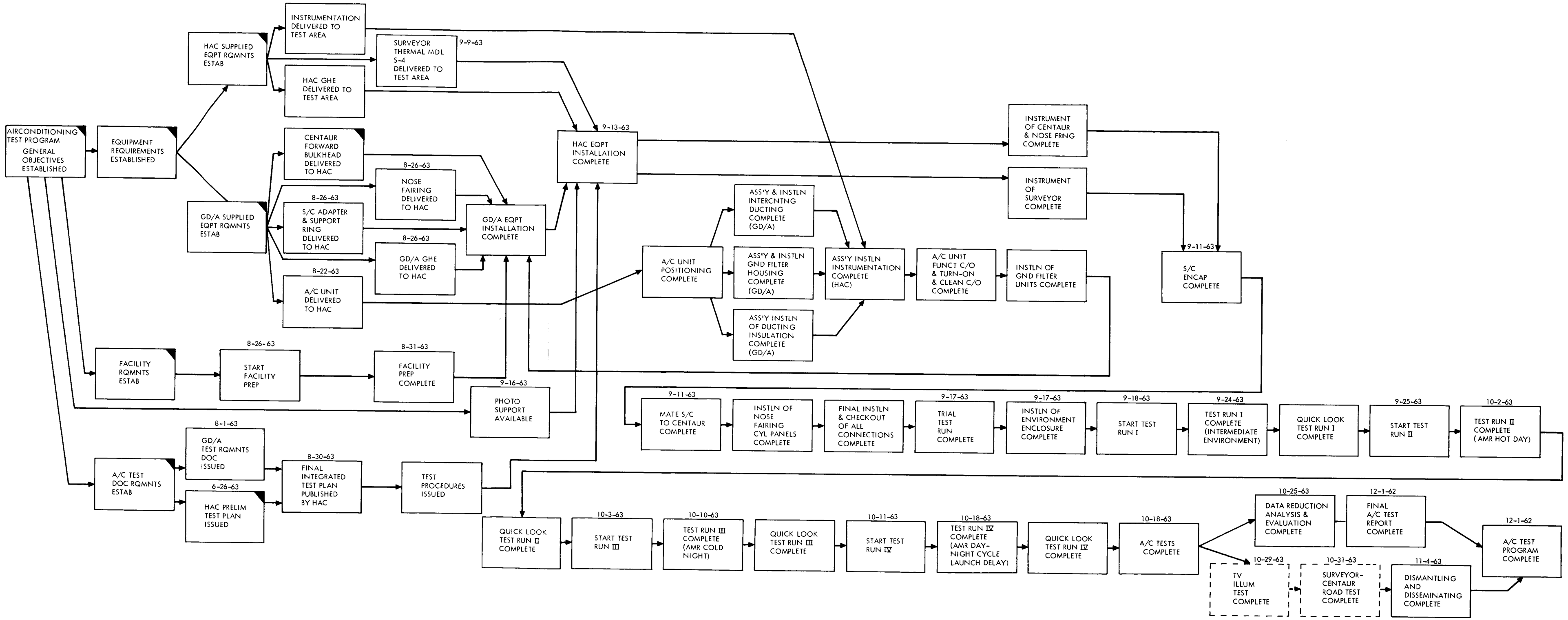

Figure 1.1 Joint HAC-GD/A Air Conditioning Test PERT Analysis

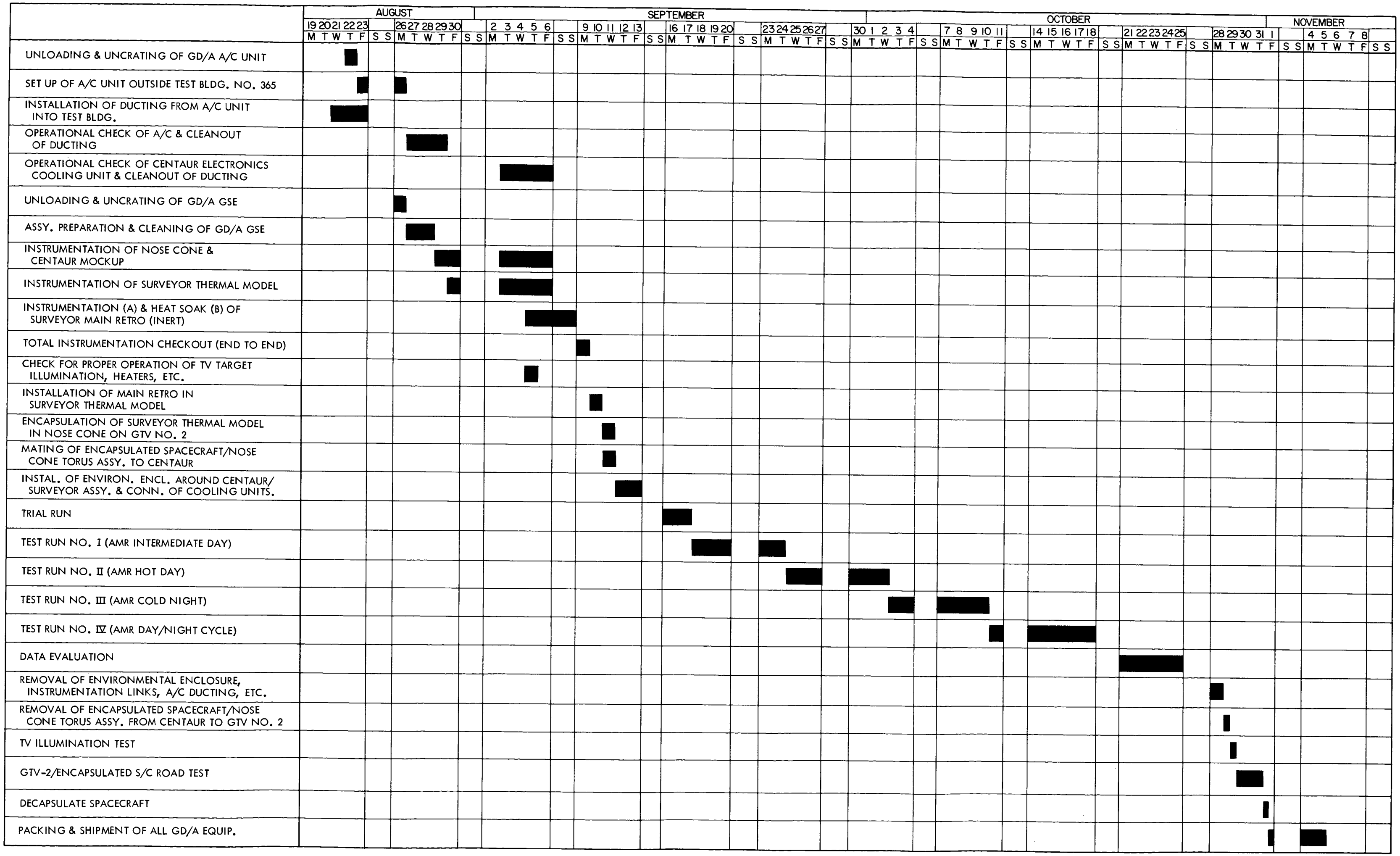

Figure 1.2 Joint HAC-GD/A Air Conditioning Test

1.3 Configuration - The spacecraft thermal model will represent the thermal picture of the actual spacecraft. It consists of a tubular frame structure (S-4) with mock-up components and subsystems. Special heaters will be installed in the power dissipating subsystems to simulate the actual thermal condition of the encapsulated spacecraft.

The following subsystems will have heaters:

a. Compartments A and B, which have radiator areas of 2.84 ft^2 and 1.99 ft^2 respectively. The compartments normally contain electronic packages and battery. The average power dissipations are 13 watts and 12.5 watts respectively.

b. Inertial Reference Unit (IRU), with a radiator area of 0.27 ft^2. Average power dissipation is 10 - 39 watts.

c. Flight Control Electronics (FCE), whose radiator area is 0.90 ft^2. Average power dissipation is 20 watts.

The heaters in the packages will be wired to a separate control panel (see figure 1.3) where they can be independently controlled for necessary temperature regulations.

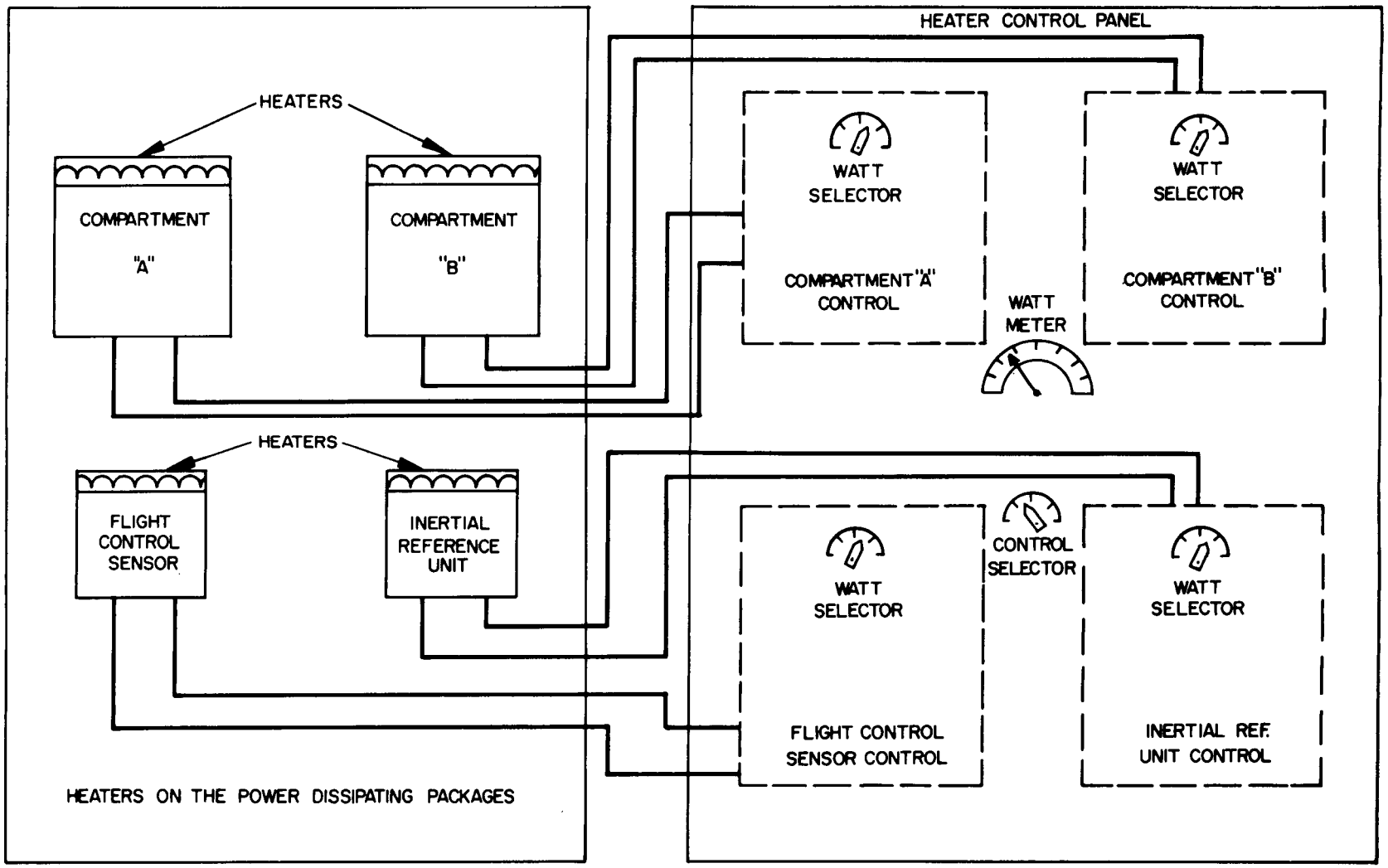

Figure 1.3 Power and Heater Control Panel

2. EQUIPMENT REQUIREMENTS

2.1 GD/A Supplied Equipment - GD/A will supply the following equipment for the air conditioning test:

a. A Surveyor-type nose fairing (complete forward and aft sections) including TV internal illumination lights, and associated electrical cables and disconnect plugs. (See paragraph 4.1 and 4.2e.)

b. Spacecraft adapter assembly (forward and aft sections) complete with thermal bulkhead and diaphragm, spacecraft separation latches, and electrical umbilical cable and disconnect mechanism (both halves of disconnect plug will be provided by HAC).

c. Centaur forward bulkhead mock-up complete with nose fairing hinges, Station 219 10-feet diameter support ring, payload mounting ring, and upper electronics equipment shelf. This bulkhead mock-up will be the same item provided to HAC in May 1963 for the matchmate test. The tank portion of this mock-up is of solid plaster, cast over a reinforcing framework of tubular steel. Mock-ups of Centaur electronic packages will include only those on the upper shelf. Nose fairing hinges will be added by GD/A to permit installation of the complete nose fairing. A plywood covering (tapped in place) sufficient to seal off the opening in the nose fairing normally occupied by the Centaur forward umbilical island will also be provided.

d. Airborne air conditioning ducting and accessories to include upper and lower ring distribution ducts, ground and inflight disconnects, and all inter-connecting ducting. However, portions of this ducting will not be of flight releaseable design since final release is dependent upon the air conditioning test results.

2.1 (Continued)

e. Ground handling equipment. (See Table 2.1.)

f. A prototype of the Surveyor air conditioning supply unit designed by GD/A for the operational AMR installation.

g. All ground ducting and accessories necessary for interconnecting the Surveyor air conditioning unit to the airborne components. This consists of a 10-inch diameter aluminum supply line (originating at the ground unit), a ground (10-micron) dust filter assembly (with pressure taps), a butterfly shut-off valve, an 8-inch diameter aluminum duct section, an 8-inch diameter flexible duct section (simulating the umbilical boom portion of the supply duct), and a ground-to-air disconnect assembly. (See figure 2.1.)

h. Centaur electronic compartment airborne air conditioning ducting and associated airborne ducting for distributing air in the lower spacecraft adapter section (below thermal diaphragm) together with ground-to-air disconnect fitting.

i. An adapter section to be used between the Centaur electronics cooling duct opening and the HAC cooling equipment. The adapter will include a 135-inch long section of 6-inch diameter flexible ducting.

2.2 <u>HAC Supplied Equipment</u> - HAC will supply the following:

a. A modified Surveyor Mock-up (thermal model) containing heaters to simulate thermal conditions for all heat dissipating packages.

b. A manual heater control for individually controlling spacecraft heaters.

c. A cooling unit to simulate the cooling air flow normally supplied to the Centaur electronics compartment and to lower spacecraft adapter area. This unit shall have a 1000 CFM capacity rating at outlet conditions of 40°F and 10" H_2O static pressure.

d. An environmental enclosure shall be provided with the capability of dissipating or radiating from 105°F to 140°F temperatures on the outside nose

2.2 (Continued)

fairing skin to simulate solar impingement. (See figure 2.2.) The 140°F temperature should be imposed over one-half of the nose fairing external periphery extending 15° from the +Y axis (in Quad I) to 15° from the -Y axis (in Quad III) through Quads I, II and III. It shall also be used to provide either 40°F, 85°F or 105°F air on all sides of the nose fairing.

e. Ground handling equipment. (See Table 2.2.)

Table 2.1 General Dynamics/Astronautics Supplied Equipment

EQUIPMENT	GD/A DWG. NUMBER	USE
Nose Cone Support Ring	55-90064	A support fixture for holding the nose fairing halves in an upright position for assembly purposes.
Sling Assembly for Nose Cone and Torus	55-90062	Handling sling used in assembly of the nose cone and torus assemblies.
Torus Assembly	55-90060	Two half-rings which will be assembled around the nose fairing/spacecraft during encapsulation and Centaur mating operations.
Nose Cone Erection Sling	55-93000	Used to erect nose fairing halves to vertical position when mating to the nose cone support ring.
Torus Assembly Sling	55-90065	Sling used to lift and assemble the two torus half rings on the 55-90061 handling carts.
Torus Assembly Handling Carts	55-90061	Two torus nose cone carts will be used to encapsulate the spacecraft within the nose cone.
Spacecraft Support Arms	55-90068 (55-90060 assembly)	Three cantilever members used to support the forward adapter/spacecraft assembly from the torus ring during Centaur mating procedures.
Work Stands	55-09029	Designed and provided by GD/A, as required, to perform nose fairing tasks in the final assembly area.
Forward Adapter Support Ring	55-90063	Spacer used for support and tie-down of forward adapter and spacecraft when mounted on GTV #2. Used during encapsulation and transport operations.

Table 2.2 Hughes Aircraft Company Supplied Equipment

EQUIPMENT	DRAWING NUMBER	USE
Spacecraft Handling Cart	X261984	To support spacecraft prior to upper payload adapter (GD/A) installation.
Ground Transport Vehicle No.2 (Large)	X231565	To transport spacecraft and nose cone assembly from ESA to the launch complex.
Pick Up and Hoist Equipment	X231560	To handle spacecraft during checkout and installation of the retro rocket. (See figure 2.3 for main retro rocket handling procedures.)
Rocket Engine Roll-Over Equipment	X261982	To rotate retro rocket engine 180° (T.C. down position) in preparation for installation into spacecraft.
Rocket Engine Stand	X261983	To support rocket engine prior to spacecraft installation.
Lifting Tool for Retro Rocket	X261981	To lift the retro rocket from the shipping case.
Work Platforms	X264065	To perform spacecraft tasks that cannot be reached from the floor in HAC test facility.
Mating Platform for Retro Engine & Spacecraft	X238608	To assemble the inert retro engine to the spacecraft when weight and balance operations are not necessary.

16

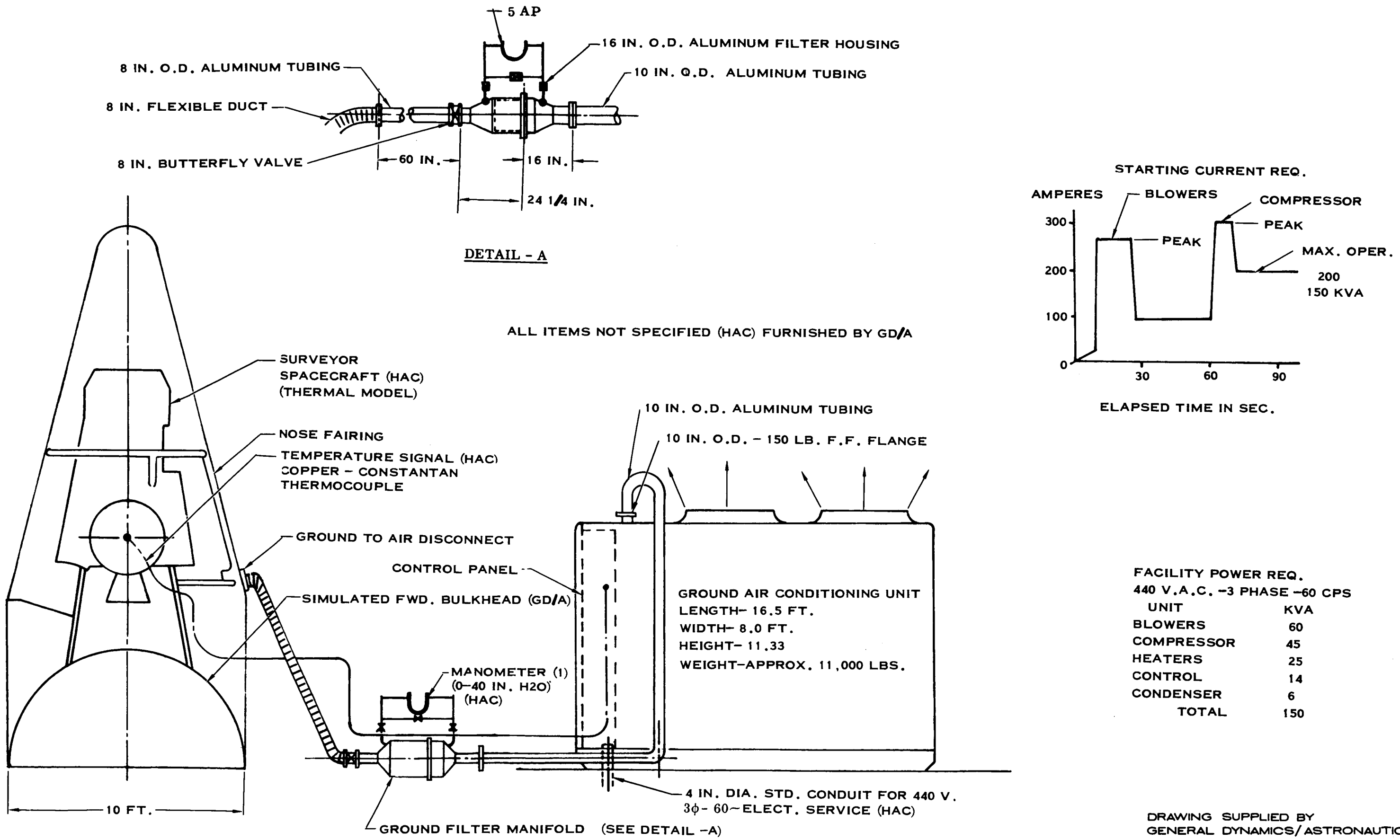

Figure 2.1 Surveyor Air Conditioning Unit Test Setup

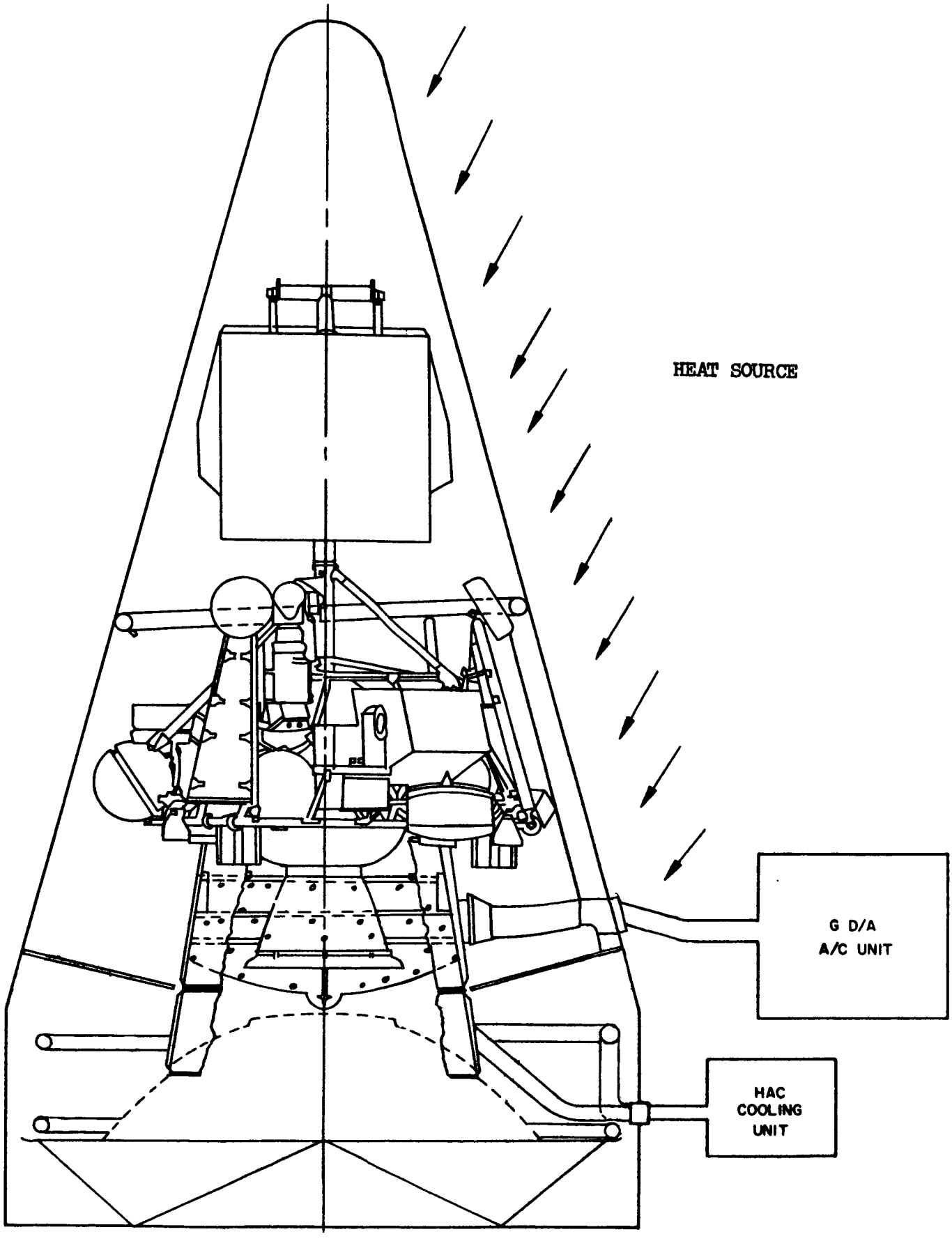

Figure 2.2 Heat Source Arrangement

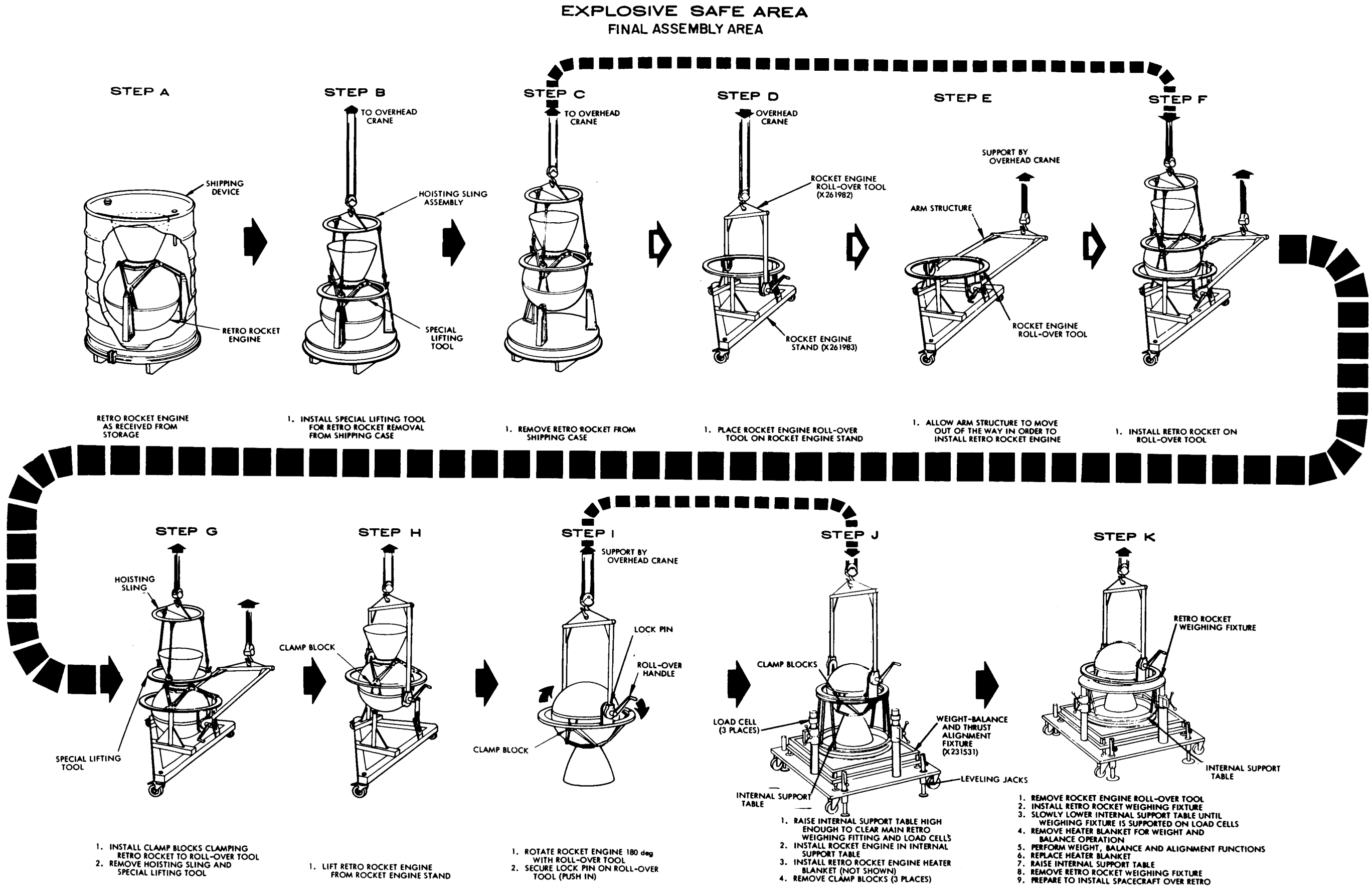

Figure 2.3 Main Retro Rocket Handling Procedures

3. TEST PROCEDURES

3.1 Test Responsibilities.

3.1.1 GD/A Responsibilities - GD/A will be responsible for providing sufficient Test Operations personnel for handling, assembly, checkout, and operation of GD/A supplied equipment necessary to perform the test within the requirements of the documented test plan and GD/A procedures. GD/A Factory Engineering Test Support personnel will setup and install the GD/A supplied Surveyor air conditioning ducting at the HAC test facility. Engineering Design and Test Evaluation personnel will also be available to provide technical assistance, data analysis, and reporting assistance where necessary. Any modification or repair of GD/A supplied equipment found necessary during the test will be performed by GD/A personnel.

3.1.2 HAC Responsibilities - HAC will be responsible for HAC supplied equipment in the same manner as described above for GD/A equipment. In specific, HAC will have responsibility for assembly, handling, setup, checkout, and operation of the spacecraft (and any associated equipment), the Centaur air cooling unit (and associated ducting to the nose fairing), all equipment associated with providing the ambient environments to the Centaur/Surveyor test article, all equipment associated with providing solar heat simulation, and all instrumentation and recording equipment. In addition, HAC shall have responsibility for any facility setup and tear-down activities as required, and also all test support items listed in Section 4. During the actual test, an HAC designee will serve as overall test conductor, coordinating the operational activities of both GD/A and HAC test personnel.

3.2 Test Preparation Sequence -

a. Installation of Surveyor A/C ground ducting. Check out.

b. Installation of Surveyor A/C ground unit. Check out.

3.2 (Continued)

c. Set up nose fairing, adapter sections, and GSE.

d. Instrumentation of GD/A components by HAC

NOTE

Instrumentation of thermal model could be performed prior to GD/A components (at HAC discretion).

e. Prepare thermal model and install.

f. Perform end-to-end instrumentation checkout.

g. Encapsulate Surveyor thermal model and mate to Centaur per procedures developed during Match-Mate Tests. (Refer to HAC Document 264707.)

h. Connect air conditioning ducting.

i. Perform an initial trial run if conditions permit and it is mutually agreed to by HAC and GD/A.

j. Install environmental enclosure.

k. Perform second trial run.

3.3 Air Conditioning Test Runs - After completion of all preliminary activities, the major test phase will be initiated. This will consist of test runs under varying test conditions as follows:

a. Test Run No. I. (Intermediate Environment: 85°F Ambient Exposure, Minimum Air Conditioning Loading Conditions.)

1. The Surveyor components are to be stabilized at 85°F and the nose fairing will be heated to 85°F ± 5°F. The temperature of the various Surveyor components will be monitored. If a component temperature goes beyond acceptable limits, the time elapsed from the start of this test will be noted to the nearest minute.

2. The GD/A air conditioning unit will be set to 85°F (and less than 50% relative humidity) and

3.3 (Continued)

1000 scfm and started using applicable start procedures. The Centaur electronics cooling will also be turned on. The time required for the temperature to stabilize within acceptable limits for the various Surveyor components will be determined to the nearest minute. If adjustments are required to the temperature or flow rate control systems to obtain satisfactory results, then this run should be repeated to this point.

The pressure drop across the ground filter will be recorded at this time.

3. After completion of step 2, all Surveyor heat packages will be energized. The temperature at all test points will be checked for stabilization at the required temperatures and the time required to reach these acceptable temperatures should be recorded.

4. The test run will be continued for 2 hours after step 3 to firmly establish a portion of the data collected.

5. The Surveyor air conditioning unit and the Centaur electronics cooling will be turned off and if any of the various Surveyor components temperatures go out of acceptable limits the time to do so will be recorded. The Surveyor air conditioning unit and Centaur cooling will be restarted after one (1) hour and the time required to achieve acceptable temperature stabilization of the Surveyor components established.

6. Disconnect the nose fairing temperature sensor control wire from the GD/A A/C unit and monitor the effect on the Surveyor components. Reconnect the wire after 1 hour.

7. Terminate test run.

3.3 (Continued)

b. Test Run No. II. (Simulated AMR Hot Day: 105°F Solar Exposure, Maximum Heating Conditions)

1. Starting with the Surveyor components stabilized at 85°F and half of the nose fairing heated to 140°F ±5°F, the other half to 150°F ±5°F and without either air conditioning unit turned on. The temperature of the various Surveyor components will be monitored. As each of the Surveyor components temperature goes beyond acceptable limits, the time that elapsed from the start of this step will be noted to the nearest minute. (See figure 2.2.)

2. Same as Step 2, Run I.

3. Same as Step 3, Run I.

4. Same as Step 4, Run I.

5. Same as Step 5, Run I.

6. Turn Centaur electronics cooling off for one hour. After observing the effect of this action on the temperatures, turn the cooling back on and permit temperatures to restablize.

7. Same as Step 6, Run I.

8. Same as Step 7, Run I.

c. Test Run No. III. (Simulated AMR Cold Night: 40°F Ambient Exposure, Maximum Cooling Condition)

1. Step 1 of Run I will be repeated with the following change: The nose fairing will be cooled to 40°F ± 5°F surface temperature.

2. Same as Step 2, Run I.

3. Same as Step 3, Run I.

4. Same as Step 4, Run I.

5. Same as Step 5, Run I.

6. Same as Step 6, Run I.

7. Same as Step 7, Run I.

3.3 (Continued)

d. Test Run No. IV. (Simulated AMR Day/Night Cycle, Launch Delay)

1. Same as Step 1, Run I.

2. Same as Step 2, Run I.

3. Nose fairing temperature cycling will be started per a selected daily temperature/time history. Run for at least two (2) cycles or until periodic equilibrium and primary system response characteristics are established. All temperature variations, as well as the performance of the air conditioning unit, are to be monitored. The hot environment of the cyclic day is to be 105°F all around the nose fairing, and the cycling test is to be arranged so that it will end when the environmental temperature is 105°F for 9 hours. During this 9 hours the heat packages shall be turned on and programmed per figure 1.1 of the JPL interface document -- if possible. For the last hour, expose one side of the fairing to 140°F.

e. Test Run No. V. (Simulated Cold Night, with Thermal Bulkhead Removed from Nose Fairing)

1. To be run only if time permits.

2. Remove environmental enclosure.

3. Decapsulate Surveyor spacecraft test model.

4. Remove nose fairing thermal bulkhead.

5. Encapsulate spacecraft test model.

6. Replace environmental enclosure.

7. Repeat Test Run No. III.

3.4 TV Illumination Test -

The objective of this test is to check the positioning of the TV targets and illumination lights within the nose fairing to assure the proper location and adequacy of illumination for

3.4 (Continued)

prelaunch TV tests on the Surveyor spacecraft. After test equipment is installed on the spacecraft and nose fairing, the spacecraft will be encapsulated and the test will proceed per HAC document 2255.2/208.

3.4.1 GD/A - Furnished Equipment - GD/A will furnish explosion-proof bulbs capable of a minimum target illumination of 8 lumens per square foot, and three TV targets on the fairing interface as shown in HAC document 2255.2/208.

3.4.2 HAC - Furnished Equipment - HAC will furnish three brightness spotmeters--one each on TV camera mounts 2, 3 and 4--and necessary monitoring equipment.

3.5 Surveyor/Centaur Road Test -

The objective of this test is to verify the roadability of GTV #2 with the encapsulated spacecraft mounted on it. The dummy-weight equivalent of the spacecraft will be used. Adequate instrumentation will be installed to monitor accelerations and shocks on the equipment. The main parts of the road test are:

a. Normal Run - The loaded GTV #2 is to be towed on level roadway at a speed not exceeding 5 mph over a course prescribed by the Test Director. Road clearances are to be checked.

b. Ramp Test - The loaded GTV #2 is to be towed up a ramp of approximately 5° inclination and onto a level platform at the top of the ramp. A careful check of clearances will be made.

c. Emergency Stop - While the loaded GTV #2 is being towed at 5 mph, a full, emergency stop will be made. The capability of the vehicle to withstand without damage the resultant shock and vibration will be evaluated.

4. TEST SUPPORT REQUIREMENTS

4.1 Instrumentation-

HAC will be responsible for providing and installing all GD/A required test instrumentation to GD/A specifications. Where instrumentation is to be mechanically attached to any part of GD/A mounted hardware where material removal is required, GD/A will provide the mounting attachment, i.e., threaded-fitting holes, etc. Where measurements can be attached by tape, adhesive, or other material, HAC will make the attachment based on GD/A recommendation of the type of adhesive material to use. Where any cutout is required through the wall of the spacecraft enclosure for purposes of bringing out instrumentation wiring leads, etc., special attention must be extended to assure positive sealing against leakage. Care must also be made to thoroughly clean all equipment prior to reassembly.

Test instrumentation measurement requirements are tabulated in Tables 4.1, 4.2 and 4.3. Installation locations of each of these measurements is detailed in figures 4.1, 4.2, 4.3 and 4.4. A measurement coding system is presented on the measurement list tables as a convenience for later rapid identification of individual measurements.

The temperature sensors listed in Table 4.1 are Copper Constantin thermocouples, all but one of which will operate into Brown recorders. Couple No.26 AT is to be used as control for the GD/A air conditioning equipment. In case the thermal time constant at the point of location of this couple is too long to permit close control, one or more of the other thermocouples will be tried.

The differential pressures to be measured are listed in Table 4.2. An additional manometer will be teed off one side of 12 AP to give static pressure relative to ambient on the nose-cone side of the thermal bulkhead.

4.1 (Continued)

The velocity measurements to be measured are shown in Table 4.3. Pitot-static tubes will be mounted for the first four in locations chosen by GD/A. A male fitting having 1/2" n.p.s. thread will be placed in the tubing walls by GD/A prior to shipment from San Diego. The measurement will present some error due to uncertainty of velocity distribution through the duct. However, it is agreed by GD/A and HAC that a single-point measurement is sufficient.

Thermocouple wires and manometer tubing will be made long enough so they can be cabled through the nose-cone section and cylindrical section before encapsulation, and connected to indicators and recorders for checkout. It should not, therefore, be necessary to disconnect and reconnect during encapsulation.

An ethyl alcohol and water solution (50% each by volume) will be used in the manometer tubes. This will minimize the hygroscopic effects of pure alcohol and the meniscus error sometimes present with pure water.

4.1.1 Recorders - Provide, as required, sufficient recorders to monitor all measurements. It is required that the recorded data be capable of being scanned and easily interpreted during the course of the test runs. The method of recording used shall provide this capability.

4.1.2 Data Evaluation - At the end of each test run, a quick-look meeting will be held at which time the data will be evaluated to determine if the test was successful or requires a rerun.

4.2 Services.

GD/A will require the following service support from HAC.

a. Working space is required for nose fairing erection and initial alignment, spacecraft encapsulation operations, Centaur-mating operations, and general equipment storage purposes. A space layout arrangement is shown in figure 4.5. In addition, the floor surface in the working area will be free from drain holes, excessive cracks or protuberances which would cause interference with GD/A handling cart casters during encapsulation operations.

b. A hoist of approximately 5-ton capacity and hook height capability of 50 feet from floor level is required for encapsulation and mating operations to the Centaur bulkhead. The hoist must have full travel over the entire high bay area as shown in figure 4.5.

4.2 (Continued)

c. A 5-ton capacity (Model "C") hydraset is required for encapsulation and Centaur mating operations.

d. A fork lift of approximately 15,000 pound lift capacity is required for unloading of GD/A supplied equipment from shipping vans. Extensions for the fork are to be available.

e. A 28-volt dc, 5-ampere capacity power supply is required for lighting the three (3) airborne TV camera illumination lamps.

f. A small number of standard 110-volt, 60-cycle commercial power outlets in all working areas for possible use of hand tools, portable light cords, etc., is required.

g. An office desk, chair, and telephone (with long distance availability to GD/A, San Diego) for usage by GD/A personnel at HAC for the duration of the test series is required.

h. A second fork lift of 10,000 or 15,000 pound capacity (in conjunction with the one listed in Paragraph d above) is required for unloading and positioning the Surveyor A/C unit. (Dimensions of the unit are: 16.5 feet long, 8.0 feet wide, 11.3 feet high. Weight: approximately 11,000 pounds.)

i. Working space and electrical power supply for the Surveyor air conditioning unit in the test area is required. These data are provided in figure 2.1.

j. A communication link is required between the GD/A air conditioning unit operator (outside the test building) and the Centaur bulkhead test area (inside the building).

k. An air (or GN_2) supply for activating the spacecraft air conditioning ground-to-air disconnect locking device is required in the test area. Supply pressure should be regulated to between 20 to 100 psig. GD/A will supply the necessary interconnecting tubing and accessories between the HAC supply tap and the ground-to-air disconnect.

l. A 440 - 480 volt, 3-phase, 60-cycle, 150 KVA electrical power supply for the Surveyor A/C unit is required. This should be routed to the setup location outside HAC Building 365 by standard electrical conduit.

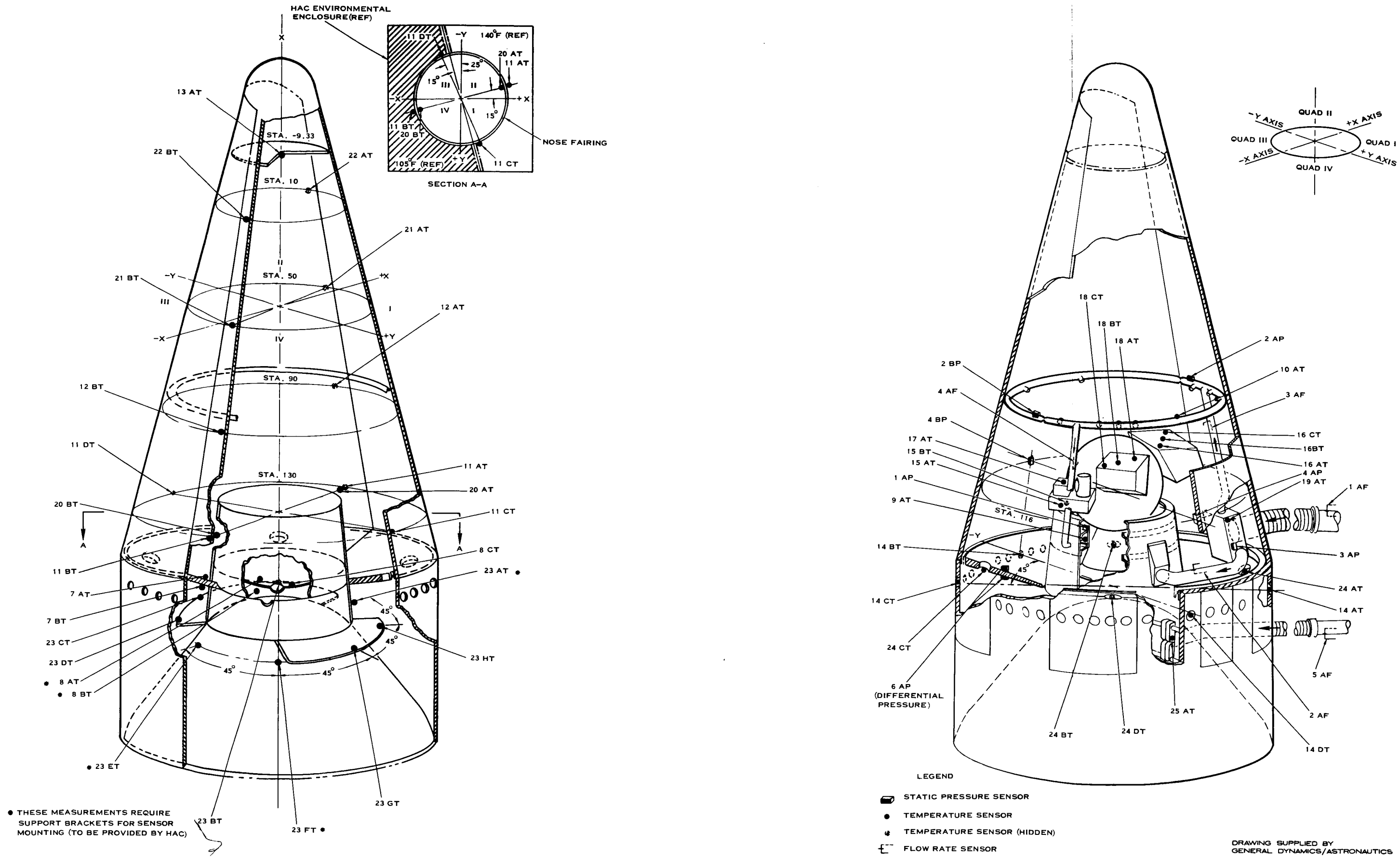

Figure 4.1 Instrumentation Layout for Surveyor Air Conditioning Test

NOTE
IN ADDITION TO THE SENSORS SHOWN, HAC PLANS TO LOCATE APPROXIMATELY 15 ADDITIONAL TEMPERATURE SENSORS WITHIN THE RETRO-ROCKET INTERIOR.

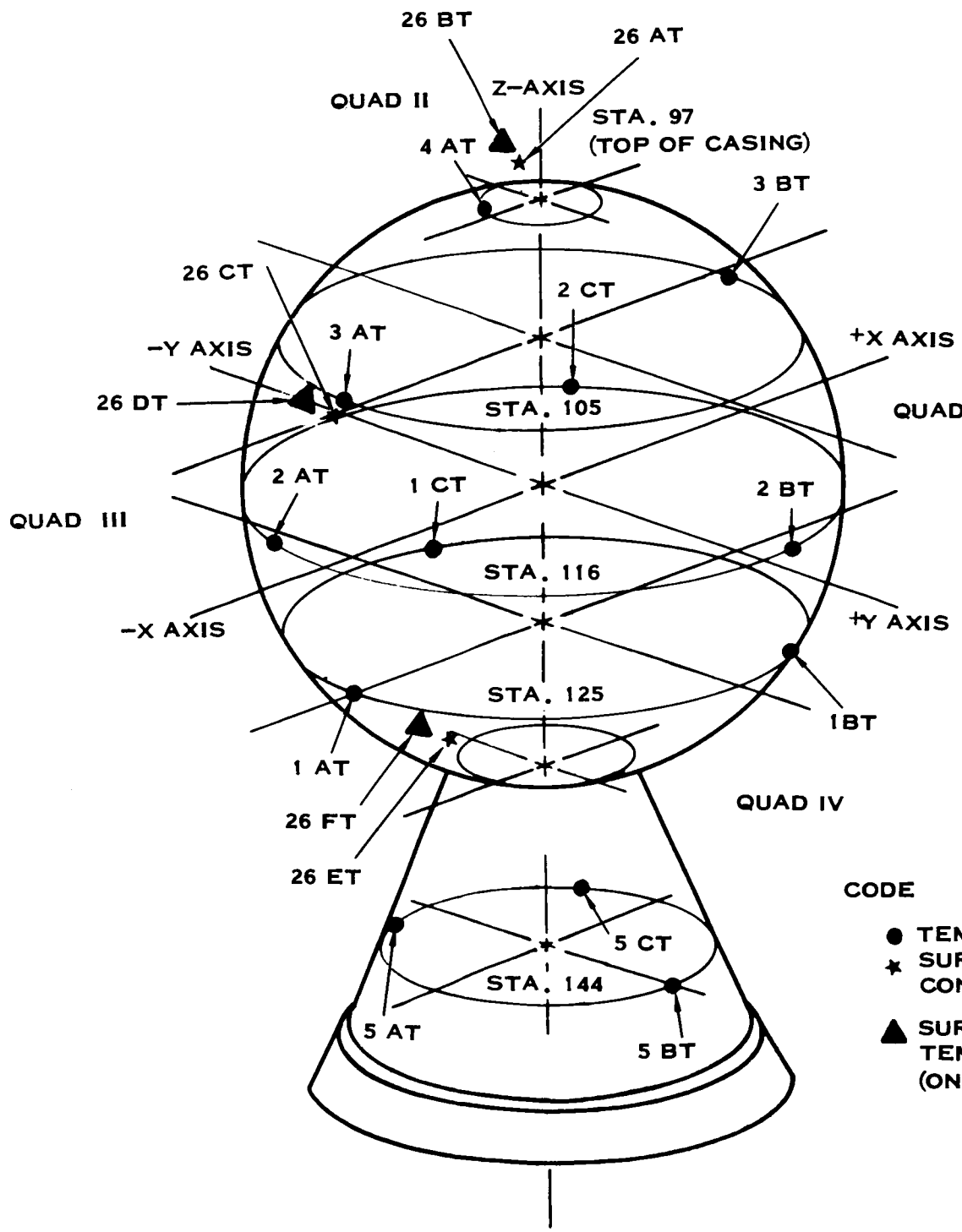

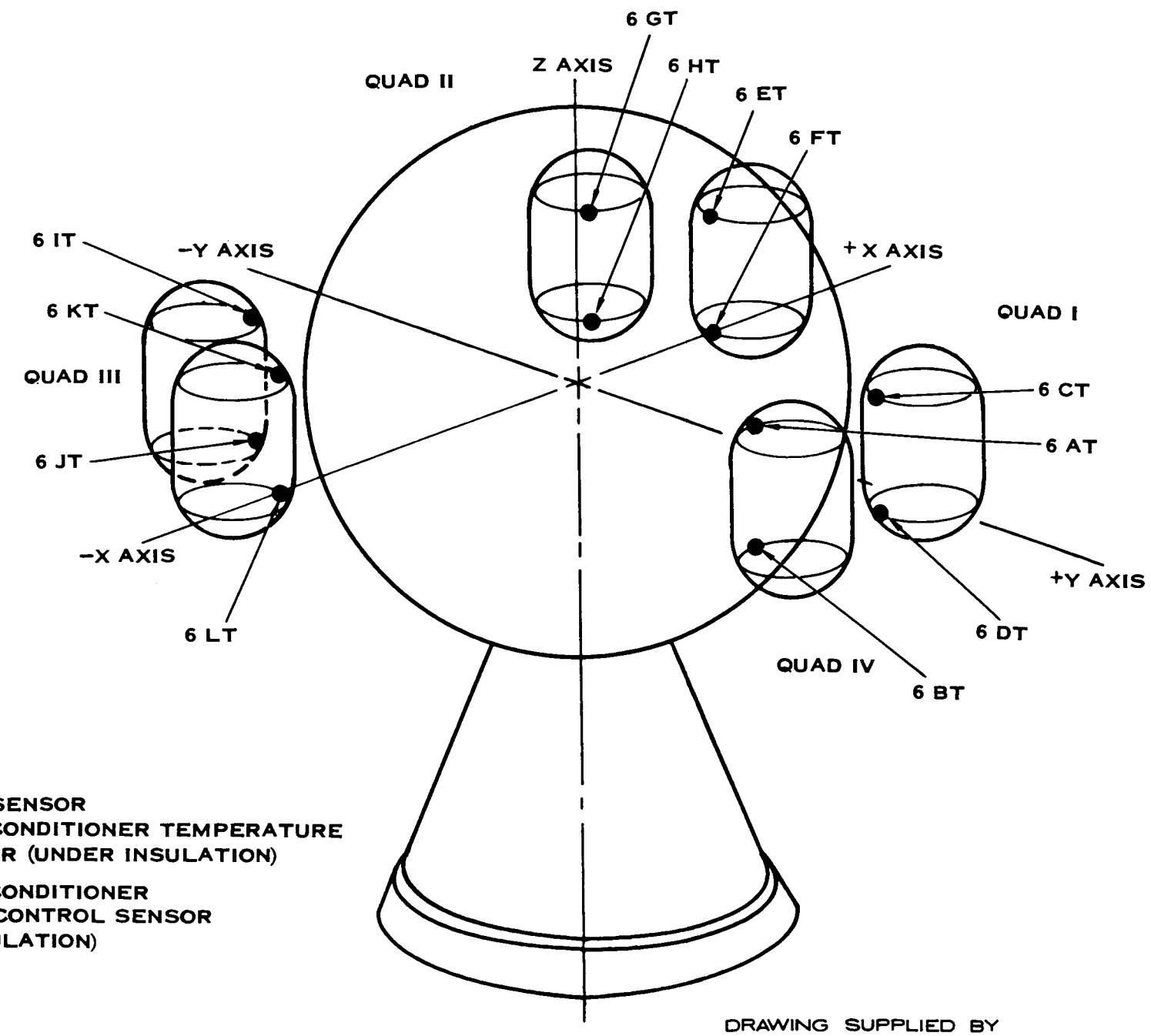

CODE

- ● TEMPERATURE SENSOR
- ✶ SURVEYOR AIR CONDITIONER TEMPERATURE CONTROL SENSOR (UNDER INSULATION)
- ▲ SURVEYOR AIR CONDITIONER TEMPERATURE CONTROL SENSOR (ON TOP OF INSULATION)

DRAWING SUPPLIED BY GENERAL DYNAMICS/ASTRONAUTICS

Figure 4.2 Location of Temperature Sensors on Surveyor Retro Rocket and Vernier Engine System Propellant Tank

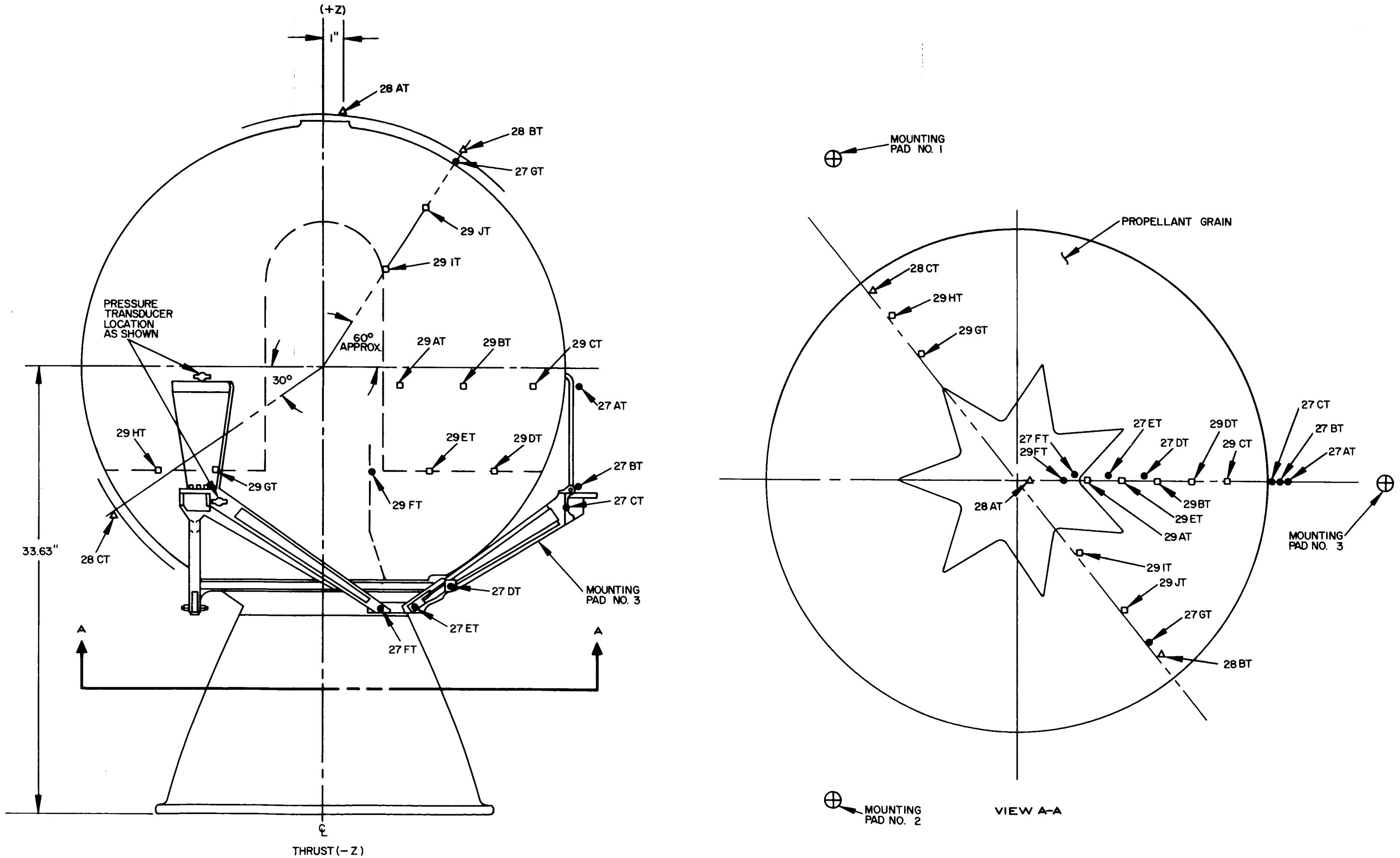

Figure 4.3 Temperature Sensors and Pressure Transducer Locations on Main Retro Rocket

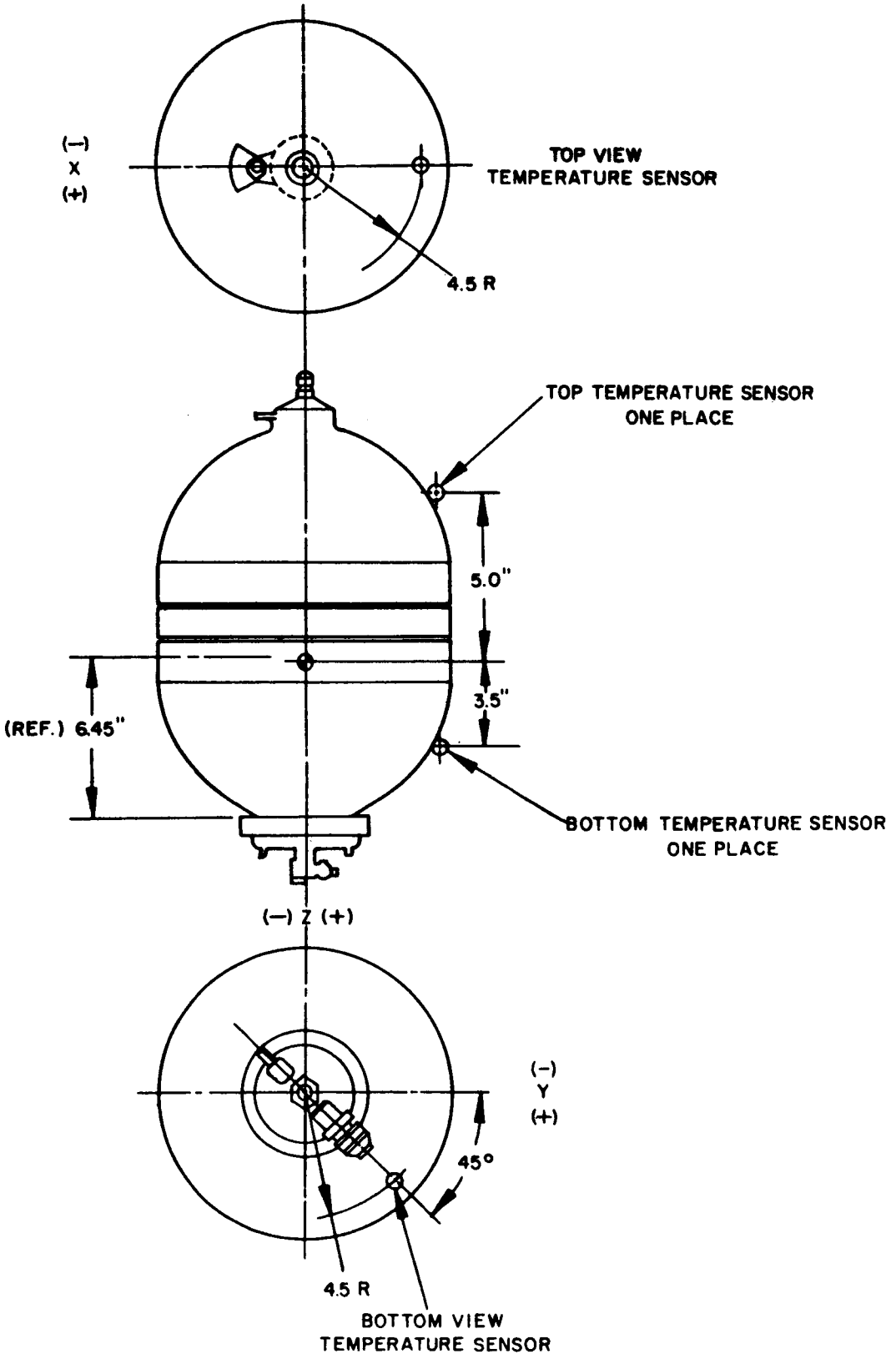

Figure 4.4 Temperature Sensor Locations for all Propellant Tanks

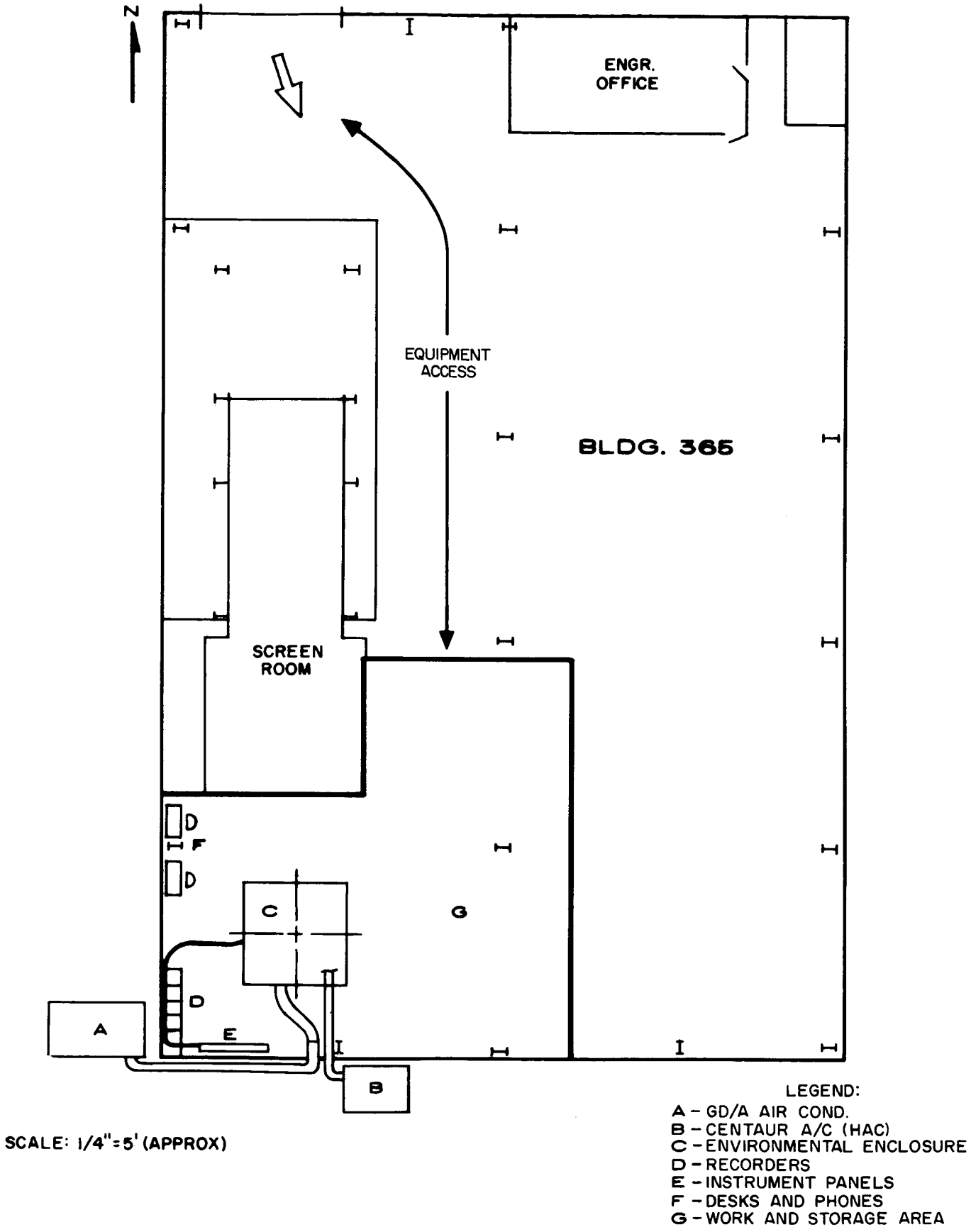

Figure 4.5 Working Space Requirements for Spacecraft Encapsulation Operation

4.3 Photographic Support -

HAC will supply all photographic data acquisition support required for the test. Preliminary photographic requirements are as follows:

a. Black and white still photographic coverage of all major steps of spacecraft encapsulation, Centaur mating and demating procedures. Close-up pictures of special instrumented areas (to be designated) and equipment will be required as well as overall shots of the assembly and mating operations at each major step.

b. Color moving picture footage of assembly and mating operations is required. Primary emphasis is for status reporting and general indoctrination purposes rather than detailed engineering analysis.

c. Specific items, areas, or activities to be photographed will be designated by the HAC Test Director as consistent as possible with GD/A and HAC desired coverage.

d. HAC to furnish GD/A with a 4 inch by 5 inch negative, plus three 8 inch by 10 inch glossy prints of each still picture taken.

Table 4.1 Centaur/Surveyor Air Conditioning Test Instrumentation Requirements (Temperature Measurements)

SENSOR TITLE	SENSOR LOCATION (Ref. Figures 4-1 thru 4-4)	QTY REQ'D	NOMINAL RANGE (°F)	DESIRED SENSOR RANGE (°F)	DESIRED OVERALL ACCURACY (°F)
1. (1AT-1CT) Spacecraft Retro-rocket Casing-Lower	Placed 120° apart on retro-rocket casing at Station 125	3	80-90	60-110	±1.0
2. (2AT-2CT) Spacecraft Retro-rocket Casing-Middle	Placed 120° apart on retro-rocket casing at Station 116	3	80-90	60-110	±1.0
3. (3AT-3BT) Spacecraft Retro-rocket Casing-Upper	Two spaced 180° apart on retro-rocket casing at Station 105	2	80-90	60-110	±1.0
4. (4AT) Spacecraft Retro-rocket Casing-Top	Located on top of retro-rocket casing at Station 97	1	80-90	60-110	±1.0
5. (5AT-5CT) Spacecraft Retro-rocket Thrust Chamber Nozzle	Equally spaced at 120° intervals on thrust chamber nozzle at Station 144	3	80-90	60-110	±1.0
6. (6AT-6LT) Spacecraft Vernier Engine System Propellant tanks	Located (2) each on six vernier engine propellant bottles at base of elliptical head of each bottle approximately 8.5" apart	12	80-100	60-120	±1.0

Table 4.1 (Continued)

SENSOR TITLE	SENSOR LOCATION (Ref. Figures 4-1 thru 4-4)	QTY REQ'D	NOMINAL RANGE (°F)	DESIRED SENSOR RANGE (°F)	DESIRED OVERALL ACCURACY (°F)
7. (7AT-7BT) Thermal Bulkhead-Upper & Lower Surfaces	Locate one each on upper and lower surface of thermal bulkhead (outside of spacecraft adapter), midway radially between nose fairing inner periphery and adapter on -Y axis.	1 (L)* 1 (U)	40-90 80-100	20-110 60-120	±2.0 ±2.0
8. (8AT-8CT) Thermal Diaphragm(above, below and on)	Locate one each on each side of thermal diaphragm in approximate geometrical center of lower adapter about 1" from diaphragm surface.	1 (L)* 1 (U) 1 (M)	40-90 80-100 40-100	20-110 60-120 20-110	±2.0 ±2.0 ±2.0
9. (9AT) Lower Air Distribution Ring	Located in air stream of lower air distribution ring at Station 144 on +X axis	1	80-90	60-110	±2.0
10. (10AT) Upper Air Distribution Ring	Located in air stream of upper air distribution ring at Station 84 on +Y axis	1	80-90	60-110	±2.0

*(L) Lower Measurement
(U) Upper Measurement
(M) Middle Measurement

36

Table 4.1 (Continued)

SENSOR TITLE	SENSOR LOCATION (Ref. Figures 4-1 thru 4-4)	QTY REQ'D	NOMINAL RANGE (°F)	DESIRED SENSOR RANGE (°F)	DESIRED OVERALL ACCURACY (°F)
11. (11AT-11DT) Nose Fairing Conical Sections-Outer	One each placed 15° from X-axis in Quads II and IV, and one each placed 25° from Y-axis in Quads I and III at Station 130	4	40-140	20-160	±2.0
12. (12AT-12BT) Nose Fairing Conical Sections-Outer	Spaced 180° apart on nose fairing outer surface 15° from X-axis in Quads II and IV at Station 90	2	40-140	20-160	±2.0
13 (13AT) Deflector Plates-Nose Fairing Jetison Bottles	Located in the center of the lower surface of the deflector plate and insulated from the surface at Station-9.33	1	40-140	20-160	±2.0
14 (14AT-14DT) Nose Fairing Vent Air Outlets	Located in air stream of nose fairing vent outlet holes, one each near -Y and +Y axes, plus one each adjacent to Quads I and III thermal bulkhead outlet vent holes.	4	40-140	20-160	±2.0
15 (15AT-15BT) Spacecraft Flight Control Electronics	Located in center of surface adjacent to air distribution snorkel, and in the center of the lower surface	2	0-95	0-110	±2.0

Table 4.1 (Continued)

SENSOR TITLE	SENSOR LOCATION (Ref. Figures 4-1 thru 4-4)	QTY REQ'D	NOMINAL RANGE (°F)	DESIRED SENSOR RANGE (°F)	DESIRED OVERALL ACCURACY (°F)
16. (16AT-16CT) Spacecraft Compartment A	Located on forward surface of compartment A	3	0-95	0-110	±2.0
17. (17AT)Spacecraft Inertial Ref. Unit	Located in center of forward surface of the inertial reference unit	1	130-155	50-175	±2.0
18. (18AT-18CT) Spacecraft Compartment B	Located on forward surface of compartment B	3	0-95	0-110	±2.0
19. (19AT) Surveyor Compartment Main Inlet Duct	Located in air stream in the Surveyor compartment main supply duct inlet plenum chamber	1	80-90	60-110	±2.0
20. (20AT-20BT) Nose Conical Sections - Inner	Spaced 180° apart on nose fairing inner surface (opposite 11AT-11BT), 15° from X-axis in Quads II and IV at Station 130	2	40-140	20-160	±2.0
21. (21AT-21BT) Nose Conical Sections - Outer	Spaced 180° apart on nose fairing outer surface, 15° from X-axis in Quads II and IV at Station 50.	2	40-140	20-160	±2.0

Table 4.1 (Continued)

SENSOR TITLE	SENSOR LOCATION (Ref. Figures 4-1 thru 4-4)	QTY REQ'D	NOMINAL RANGE (°F)	DESIRED SENSOR RANGE (°F)	DESIRED OVERALL ACCURACY (°F)
22. (22AT-22BT) Nose Conical Sections - Outer	Spaced 180° apart on nose fairing outer surface, 15° from X-axis in Quads II and IV at Station 10	2	40-140	20-160	±2.0
23. (23AT-23HT) Centaur Upper Equipment Shelf	Located at approximately 45° intervals around the Centaur electronic compartment on outer edge of upper equipment shelf, one each as near as possible to +X, -X, -Y and +Y axes, one each on the shelf adjacent to each (of 4) air conditioning outlets (to be insulated from mounting surface)	8	40-90	20-110	±2.0
24. (24AT-24DT) Surveyor Compartment Outlet	Located in air stream, one each in the four thermal bulkhead outlet holes (to be insulated from mounting surface)	4	40-90	20-110	±2.0
25. (25AT) Centaur Cooling Air Inlet	Located in the Centaur cooling airborne inlet ducting	1	40-50	30-110	±2.0

Table 4.1 (Continued)

SENSOR TITLE	SENSOR LOCATION (Ref. Figures 4-1 thru 4-4)	QTY REQ'D	NOMINAL RANGE (°F)	DESIRED SENSOR RANGE (°F)	DESIRED OVERALL ACCURACY (°F)
26. (26AT-26BT) Surveyor A/C Unit Control Sensor(Copper-Constantin Type "T" Thermocouple)	Locate two each on top, middle and bottom of thermal model retro rocket; one on casing under mylar insulation, one on top of mylar insulation	6	80-90	60-110	±2.0
27. (27AT-27GT)	Placed on the outer surface of the retro-rocket casing as shown in figure 4.3	7	80-90	60-110	±1.0
28. (28AT-28CT)	Placed on the outer surface of mylar insulation as shown in figure 4.3	3	80-90	60-110	±1.0
29. (29AT-29JT)	Placed inside and on surface of propellant and on nozzle as shown in figure 4.3	10	80-90	60-110	±1.0
TOTAL TEMPERATURE MEASUREMENTS		97			

Table 4.2 Centaur/Surveyor Air Conditioning Test Instrumentation Requirements (Pressure Measurements)

SENSOR TITLE	SENSOR LOCATION (Ref. Figures 4-1 thru 4-4)	QTY REQ'D	NOMINAL RANGE (INCHES WATER)	DESIRED SENSOR RANGE (INCHES WATER)	DESIRED OVERALL ACCURACY (INCHES WATER)
1. (1AP) Lower Air Distribution Ring Duct	Located at inlet to lower air distribution ring duct at Station 144	1	0-10	0-20	±1.0
2. (2AP-2BP) Upper Air Distribution Ring Duct	Located in upper air distribution ring duct at Station 84, one between inlet and +X-axis (QUAD I) and one 180° apart near -X-axis (Quad III)	2	0-10	0-20	±1.0
3. (3AP) Surveyor Compartment Main Inlet Duct	Located in main Surveyor Compartment main supply duct inlet plenum chamber	1	0-10	0-20	±1.0
4. (4AP-4BP) Nose Fairing Conical Section	Locate 180° apart in proximity of nose fairing inner surface on Y-axis at Station 116	2	0-6	0-10	±0.50
5. (5AP) Ground Dust Filter-Diff. Pressure (Manometer)	Manometer sensing lines connected to ground filter housing inlet and outlet pressure taps	1	0-30*	0-40*	±0.15

*Differential Pressure

Table 4.2 (Continued)

SENSOR TITLE	SENSOR LOCATION (Ref. Figures 4-1 thru 4-4)	QTY REQ'D	NOMINAL RANGE (INCHES WATER)	DESIRED SENSOR RANGE (INCHES WATER)	DESIRED OVERALL ACCURACY (INCHES WATER)
6. (6AP) Spacecraft Compartment to Centaur Electronic Compartment Diff. Pressure	Located on thermal bulkhead midway radially between nose fairing inner periphery and adapter	1	0-5*	0-10*	±0.50
TOTAL PRESSURE MEASUREMENTS		8			

*Differential Pressure

Table 4.3 Centaur/Surveyor Air Conditioning Test Instrumentation Requirements (Flow Rate Measurements)

SENSOR TITLE	SENSOR LOCATION (Ref. Figures 4-1 thru 4-4)	QTY REQ'D	NOMINAL RANGE (ft/min)	DESIRED SENSOR RANGE (ft/min)	DESIRED OVERALL ACCURACY (ft/min)
1. (1AF) Main Supply Duct-Ground	In straight run of main supply duct to spacecraft	1	2580-3400	2000-4000	± 200
2. (2AF) Lower Distribution Ring Duct	Located in lower distribution ring supply duct at Station 140	1	2700-3600	2300-4500	± 225
3. (3AF) Upper Distribution Ring Duct	Located in upper distribution ring supply duct at Station 111	1	5750-7450	4950-9300	± 425
4. (4AF) Air Distribution Snorkel Duct	Located in air distribution snorkel supply duct at Station 96	1	5000-6650	4450-8300	± 410
5. (5AF) Centaur Cooling Air Supply Duct	Locate in Centaur electronics compartment cooling air supply (ground) duct from HAC supply unit	1	*	*	± 5%
TOTAL FLOW RATE MEASUREMENTS		5			

* Measurement ranges to be determined by HAC based on
(1) Choice of diameter of ducting selected by HAC and
(2) Ground unit criteria listed in Sub-section 2.2.c.

5. DOCUMENTATION REQUIREMENTS

5.1 Integrated Test Plan -

HAC will be responsible for formulating an integrated plan for conduct of the test. GD/A is to be provided preliminary copies of the integrated plan for review and approval prior to final issue.

5.2 Test Procedures -

GD/A will supply detailed test procedures as necessary for set-up, checkout, and operation of the GD/A supplied equipment. Procedures necessary for spacecraft encapsulation and Centaur mating (test setup) operation will consist of those used for the Centaur/Surveyor Match-Mate Test. The detailed procedures necessary for operation of GD/A equipment during the main portion of the test will be documented in GD/A Test Procedure AY63-0509-002-11. HAC will supply all necessary detailed procedures for HAC supplied equipment and will be generally responsible for GD/A and HAC test sequence integration during periods of joint test activity.

5.3 Test Evaluation Reports -

Immediately following completion of air conditioning testing, HAC/JPL, NASA and GD/A personnel will meet for the purpose of evaluating all data obtained and formulation of a preliminary report which will be published and distributed by HAC. A final test evaluation report will be provided by HAC, (after coordination with GD/A) within 30 days following completion of the test. It will be mandatory that all modifications to GD/A and HAC supplied equipment or procedures, which are found to be required as a result of these tests, be fully documented in the final report.

6. APPLICABLE DOCUMENTS

6.1 The following documents, of the issue in effect as of the date of this Air Conditioning Test Plan, form a part of this document to the extent referenced herein. When conflicts arise between this document and documents referenced herein, this document shall take precedence.

Documents

General Dynamics/Astronautics

AY62-0070-2	GD/A Test Requirements for the Centaur/ Surveyor Air Conditioning Test
	Atlas/Centaur Launch Vehicle and AGE Development Plan for Surveyor Mariner B

Hughes Aircraft Company

X231560	Pick Up and Hoist Equipment
X231565	Ground Transport Vehicle No.2 (Large)
X238608	Mating Platform for Retro Engine and Spacecraft
X261981	Lifting Tool for Retro Rocket
X261982	Rocket Engine Roll-Over Equipment
X261983	Rocket Engine Stand
X261984	Spacecraft Handling Cart
X264065	Work Platforms
X264707	Surveyor/Centaur Match-Mate Test Procedures