31p

Scientific Report No. 1

Control Theory Group

[redacted]

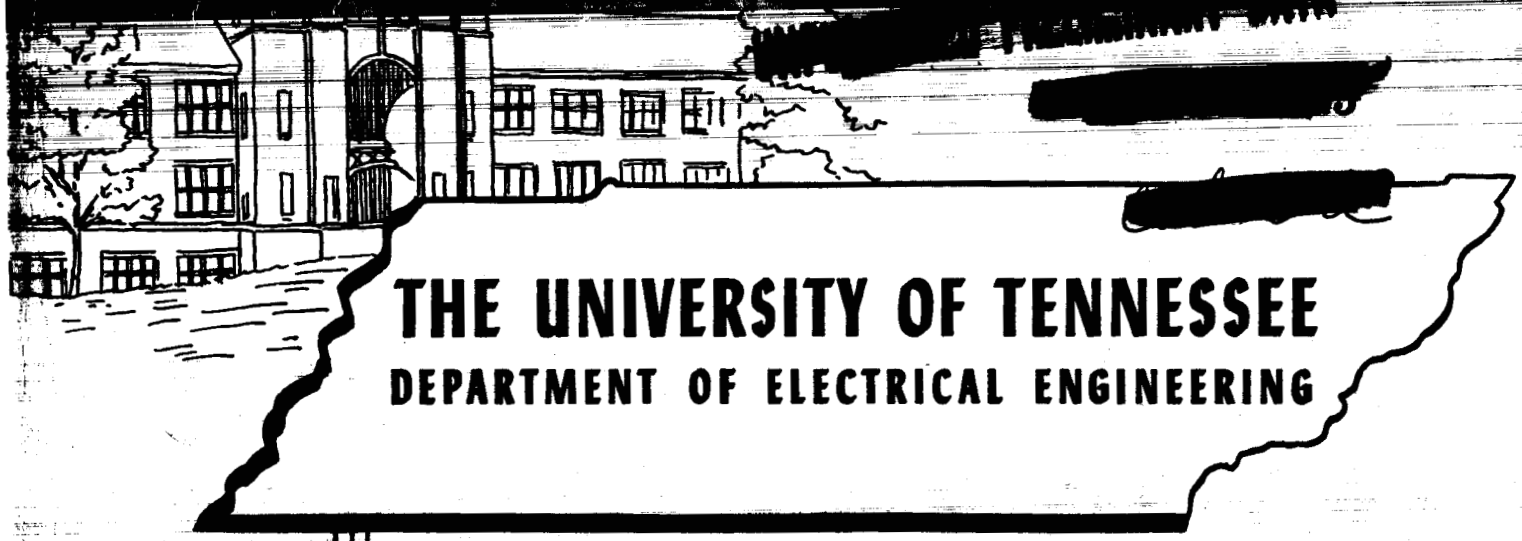

# THE UNIVERSITY OF TENNESSEE

## DEPARTMENT OF ELECTRICAL ENGINEERING

# DOUBLE-RECEPTION DISCRETE DATA OPTIMUM CONTINUOUS SIGNAL RECOVERY


by

J. C. Hung



FACILITY FORM 602

N65 17278 (ACCESSION NUMBER)

(THRU)

31 (PAGES)

1 (CODE)

CR 60781 (NASA CR OR TMX OR AD NUMBER)

07 (CATEGORY)



Supported by National Aeronautics and Space Administration under Grant No. NsG-351. To be presented at First International Telemetering Conference, September 23-27, 1963, London, England



GPO PRICE $ _____

OTS PRICE(S) $ _____

Hard copy (HC) 2.00

Microfiche (MF) .50


[redacted]

June 15, 1963


THE UNIVERSITY OF TENNESSEE COLLEGE OF ENGINEERING

Knoxville, Tennessee

# DOUBLE-RECEPTION DISCRETE DATA OPTIMUM CONTINUOUS SIGNAL RECOVERY

J. C. Hung

The research reported in this paper was supported by the National Aeronautics and Space Administration under Research Grant No. 351. This support is gratefully acknowledged.

THE UNIVERSITY OF TENNESSEE
ELECTRICAL ENGINEERING DEPARTMENT
KNOXVILLE, TENNESSEE

## ABSTRACT

14393

This paper deals with the recovery of a continuous signal from received discrete data. Very often, two sets of discrete data, obtained independently, are available for the recovery of a continuous signal. The two sets of discrete data have, in general, different data-rates. A better signal recovery will be achieved if both sets of data are employed in an optimum way, rather than when only one of the two sets is used. Optimum systems using both sets of discrete data are, in general, time-varying as opposed to the time-invariant property of the systems using only one set of discrete data, even though the signals and noise are stationary.

A procedure for the optimum recovery of a continuous signal using two sets of discrete input-data will be developed, and methods for evaluating the mean square-error will be shown. An example will also be given to illustrate the method, and the quality, of the double-input system as compared with that of the single-input system.

Author

## INTRODUCTION

In communication and control systems the recovery of a continuous random signal from received discrete data is an important problem. The discrete data occur in many practical situations. There are situations when the data-gathering devices themselves, are capable of producing only discrete sets of numbers rather than a continuous variable. There are also situations when practical advantages are to be gained by transmitting and processing only a sequence of numbers as opposed to a continuous variable. The recovery of a continuous signal from discrete data is further complicated by the random noise in the transmitting and processing channels. Therefore, the signal recovery is composed of two operations, namely, extrapolation (or interpolation) and noise removal.

Very often the available discrete data appear in several different forms. For instance, in guidance and control systems, measurements of a certain quantity may be taken by two different methods having both different data-rates and different accuracies, such as separately obtained measurements of position signal and its first derivatives. The best signal recovery will be obtained if both measurements are used and their results are weighted and combined in an optimum way.

In the case of single input optimum signal recovery, the problem is solved by Franklin[1] in the Wiener sense[2]. It is important to note that the theory of double input optimum signal recovery cannot be obtained by a simple extension of the theory for the single input case. The basic difference is the following. For both single input and double input systems having a single input-data-rate, the optimum system is time-invariant if the input signals are stationary. But for the double input system, whose two input-data-rates are different, the optimum system is time-varying even though the inputs are stationary[3]. In fact, the transfer function of the system is a function of two independent variables. In this

paper a procedure of optimum signal recovery by the double input system having two different input rates will be developed, the method of error analysis will be shown, and an example will be given to illustrate the method. It will also be shown in the example how the quality of the double-input system compares with those of the single-input system.

Three assumptions are used for the development of the thoery: first, the time series representing the signal and noise are stationary and have rational spectral density functions; second, the performance criterion used is to minimize the continuous statistical mean square-error between the system output and the ideal signal; and third, the system operation is linear. These assumptions can be justified for many practical considerations.

## MATHEMATICAL FORMULATION

The hypothetical block diagram of the system is shown in Fig. 1. In this figure, r is the desired signal to be recovered. $M_1$ and $M_2$ represent the characteristics of two transmitting and processing channels which generate the random noise $n_1$ and $n_2$ respectively. $r_1$ and $r_2$ are the hypothetical noise-contaminated continuous signals. The actual available discrete data at the output of the channels is denoted by $r_1^*$ and $r_2^*$. $G_1$ and $G_2$ are the optimum systems to be synthesized. The error e, whose mean squared value is to be minimized, is the difference between r and the actual system output c.

Fig. 2 defines the time variables used for the development of the theory. $T_1$ and $T_2$ are two different sampling periods. For simplicity of the derivation, it is assumed that the ratio of $T_1$ and $T_2$ be an integer. The time of observation is denoted by t, which is $\tau_1$ and $\tau_2$ seconds behind the last sampling instants having sampling periods $T_1$ and $T_2$ respectively.

Let the impulse response of $G_1$ and $G_2$ be

$$g_1 (nT_1) = g_1 (nT_1, \tau_1, \tau_2)$$

$$g_2 (iT_2) = g_2 (iT_2, \tau_1, \tau_2)$$

where $g_1 (nT_1)$ is a function of n, $\tau_1$ and $\tau_2$, while $g_2 (iT_2)$ is a function of i, $\tau_1$ and $\tau_2$. Notice that between $\tau_1$ and $\tau_2$ only one is independent, since $\tau_2$ is known once $\tau_1$ is given. The output of the system is

$$c (t) = \sum_{n=0}^{\infty} r_1 (t-\tau_1-nT_1) g_1 (nT_1) + \sum_{i=0}^{\infty} r_2 (t-\tau_2-iT_2) g_2 (iT_2) \quad (1)$$

and the output error is

$$e (t) = r (t) - c (t). \quad (2)$$

Squaring the error gives

$$\begin{aligned} e^2 (t) = r^2 (t) &- 2r(t) \sum_n r_1 (t-\tau_1-nT_1) g_1 (nT_1) \\ &-2r(t) \sum_i r_2 (t-\tau_2-iT_2) g_2 (iT_2) \\ &+ \sum_n \sum_m r_1 (t-\tau_1-nT_1) r_1 (t-\tau_1-mT_1) g_1 (nT_1) g_1 (mT_1) \\ &+2 \sum_n \sum_i r_1 (t-\tau_1-nT_1) r_2 (t-\tau_2-iT_2) g_1 (nT_1) g_2 (iT_2) \\ &+ \sum_i \sum_j r_2 (t-\tau_2-iT_2) r_2 (t-\tau_2-jT_2) g_2 (iT_2) g_2 (jT_2) \quad (3) \end{aligned}$$

where n, m, i and j are dummy integers. Recalling that in the theory of random processes, the correlation function of two stationary time functions x (t) and y (t) is

$$\phi_{xy}(\delta) = \text{Ensemble average of } \left[x(t)\, y(t+\delta)\right]$$

$$= \text{Time average of } \left[x(t)\, y(t+\delta)\right] \quad .$$

Taking the ensemble average of Eq. (3) results in the mean square-error

$$\begin{aligned}
\phi_{ee}(0) = \phi_{rr}(0) &- 2 \sum_n \phi_{r_1 r}(\tau_1 + nT_1)\, g_1(nT_1) \\
&-2 \sum_i \phi_{r_2 r}(\tau_2 + iT_2)\, g_2(iT_2) \\
&+ \sum_n \sum_m \phi_{r_1 r_1}(nT_1 - mT_1)\, g_1(nT_1)\, g_1(mT_1) \\
&+2 \sum_n \sum_i \phi_{r_1 r_2}(\tau_1 + nT_1 - \tau_2 - iT_2)\, g_1(nT_1)\, g_2(iT_2) \\
&+ \sum_i \sum_j \phi_{r_2 r_2}(iT_2 - jT_2)\, g_2(iT_2)\, g_2(jT_2) \quad . \qquad (4)
\end{aligned}$$

The problem then of optimum synthesis is to find $g_1(nT_1)$ and $g_2(iT_2)$ such that Eq. (4) is a minimum.

## NECESSARY AND SUFFICIENT CONDITION

To minimize the mean square-error, the method of variational calculus[4] is used. Let $\Delta\phi_{ee}(0)$ be the variation of $\phi_{ee}(0)$, and let $\Delta g_1(nT_1)$ and $\Delta g_2(iT_2)$ be the variations of $g_1(nT_1)$ and $g_2(nT_2)$

respectively. If $g_1(nT_1)$ and $g_2(iT_2)$ are the optimum system impulse responses which minimize $\phi_{ee}(0)$, then the variation of $\Delta\phi_{ee}(0)$, as a function of the variations $\Delta g_1(nT_1)$ and $\Delta g_2(iT_2)$, should be zero. That is

$$\begin{aligned}\Delta\phi_{ee}(0) = &-2 \sum_n \phi_{r_1 r}(\tau_1+nT_1)\,\Delta g_1(nT_1) \\ &-2 \sum_i \phi_{r_2 r}(\tau_2+iT_2)\,\Delta g_2(iT_2) \\ &+2 \sum_n \sum_m \phi_{r_1 r_1}(nT_1-mT_1)\, g_1(mT_1)\,\Delta g_1(nT_1) \\ &+2 \sum_n \sum_i \phi_{r_1 r_2}(\tau_1+nT_1-\tau_2-iT_2)\, g_1(nT_1)\,\Delta g_2(iT_2) \\ &+2 \sum_n \sum_i \phi_{r_1 r_2}(\tau_1+nT_1-\tau_2-iT_2)\, g_2(iT_2)\,\Delta g_1(nT_1) \\ &+2 \sum_i \sum_j \phi_{r_2 r_2}(iT_2-jT_2)\, g_2(jT_2)\,\Delta g_2(iT_2) = 0 \qquad (5)\end{aligned}$$

or, expressing this in a more convenient form

$$\begin{aligned}\Delta\phi_{ee}(0) = 2 \sum_n \Delta g_1(nT_1) \Bigg[ &\sum_m \phi_{r_1 r_1}(nT_1-mT_1)\, g_1(mT_1) \\ &+ \sum_i \phi_{r_1 r_2}(\tau_1+nT_1-\tau_2-iT_2)\, g_2(iT_2) - \phi_{r_1 r}(\tau_1+nT_1) \Bigg]\end{aligned}$$

$$+2\sum_i \Delta g_2(iT_2)\left[\sum_n \phi_{r_1r_2}(\tau_1+nT_1-\tau_2-iT_2)g_1(nT_1)\right.$$

$$\left.+\sum_j \phi_{r_2r_2}(iT_2-jT_2)g_2(jT_2)-\phi_{r_2r}(\tau_2+nT_2)\right]=0. \tag{6}$$

Since Eq. (6) must hold for any physically realizable $\Delta g_1(nT_1)$ and $\Delta g_2(iT_2)$, it requires that the expressions inside the brackets should be equal to zero individually.

$$\sum_m \phi_{r_1r_1}(nT_1-mT_1)\, g_1(mT_1)+\sum_i \phi_{r_1r_2}(\tau_1+nT_1-\tau_2-iT_2)g_2(iT_2)$$

$$=\phi_{r_1r}(\tau_1+nT_1) \qquad n\geq 0 \tag{7}$$

$$\sum_n \phi_{r_1r_2}(\tau_1+nT_1-\tau_2-iT_2)\, g_1(nT_1)+\sum_j \phi_{r_2r_2}(iT_2-jT_2)\, g_2(jT_2)$$

$$=\phi_{r_2r}(\tau_2+iT_2) \qquad i\geq 0. \tag{8}$$

The above derivation has shown that the summation equations (7) and (8) impose the necessary condition for the optimum $g_1(nT_1)$ and $g_2(iT_2)$. It can be shown that the condition is also sufficient, since the second variation of $\phi_{ee}(0)$ is never negative when Equations (7) and (8) are satisfied. Solution of the two equations yields the optimum $g_1(nT_1)$ and $g_2(iT_2)$.

## SOLUTION OF SUMMATION EQUATIONS

The form of Equations (7) and (8) suggests that their solution may be obtained by transforming the equations to, and solving the equations in, the frequency domain. In both Equations (7) and (8), first, transpose the right side terms to the left side, and then, denote the left side of the obtained equations by $f_1(nT_1)$ and $f_2(iT_2)$, respectively. Then

$$f_1(nT_1) = 0 \qquad n \geq 0 \tag{9}$$

$$f_2(iT_2) = 0 \qquad i \geq 0. \tag{10}$$

Remember it has been assumed that $T_2 = \frac{T_1}{a}$ where a is an integer. Use $\mathcal{Z}\{\ \}$ to represent the z-transformation having sampling period $T_1$ and use $\mathcal{Z}_a\{\ \}$ to represent the $z_a$-transformation having sampling period $\frac{T_1}{a}$. Taking the two-sided z-transform of Eq. (7) with respect to n, and the $z_a$-transform of Eq. (8) with respect to i, gives

$$\Phi_{r_1r_1}(z)\, G_1(z) + \mathcal{Z}\left\{\Phi_{r_1r_2}(s)\ e^{(\tau_1-\tau_2)s}\ G_2(z_a)\right\}$$

$$= \mathcal{Z}\left\{\Phi_{r_1r}(s)\ e^{+s\tau_1}\right\} + zF_1(z) \tag{11}$$

$$\mathcal{Z}_a\left\{\Phi_{r_2r_1}(s)\ e^{(\tau_2-\tau_1)s}\right\} G_1(z) + \Phi_{r_2r_2}(z_a)\, G_2(z_a)$$

$$= \mathcal{Z}_a\left\{\Phi_{r_2r}(s)\ e^{+s\tau_2}\right\} + z_aF_2(z_a) \tag{12}$$

where s is the Laplace transform variable, z is the z-transform variable, and $z_a$ is the $z_a$-transform variable. Two sided transformations are necessary, since the correlation functions are non-zero for negative values of n and i. The term $zF_1(z)$, which is the z-transform of $f_1(nT_1)$, has all its poles outside the unit-circle of the z-plane due to Eq. (9). Similarly, the term $z_aF_2(z_a)$, which is the $z_a$-transform of $f_2(iT_2)$, has all its poles outside the unit-circle of the $z_a$-plane due to Eq. (10).

Multiplying Eq. (12) by

$$z^{-1}\ \frac{\Phi_{r_1r_2}(s)}{\Phi_{r_2r_2}(z_a)}\ e^{(\tau_1-\tau_2)s}$$ and then z-transforming the whole

expression

$$\mathcal{Z}\left\{z^{-1}\frac{\Phi_{r_1r_2}(s)}{\Phi_{r_2r_2}(z_a)}\,e^{(\tau_1-\tau_2)s}\,\mathcal{Z}_a\left[\Phi_{r_2r_1}(s)\,e^{(\tau_2-\tau_1)s}\right]\right\}G_1(z)$$

$$+\,\mathcal{Z}\left\{z^{-1}\,\Phi_{r_1r_2}(s)\,e^{(\tau_1-\tau_2)s}\,G_2(z_a)\right\}$$

$$=\mathcal{Z}\left\{\frac{\Phi_{r_1r_2}(s)}{\Phi_{r_2r_2}(z_a)}\,e^{(\tau_1-\tau_2)s}\,\mathcal{Z}_a\left[\Phi_{r_2r}(s)\,e^{+s\tau_2}\right]z^{-1}\right\}$$

$$+\,\mathcal{Z}\left\{\frac{\Phi_{r_1r_2}(s)}{\Phi_{r_2r_2}(z_a)}\,e^{(\tau_1-\tau_2)s}\,F_2(z_a)\,\frac{z^{-1}}{z_a^{-1}}\right\} \tag{13}$$

Substracting Eq. (13) from the product of Eq. (11) and $z^{-1}$ yields

$$z^{-1}\left[\Phi_{r_1r_1}(z)\;-\right.$$

$$\left.\mathcal{Z}\left\{\frac{\Phi_{r_1r_2}(s)}{\Phi_{r_2r_2}(z_a)}\,e^{(\tau_1-\tau_2)s}\,\mathcal{Z}_a\left[\Phi_{r_2r_1}(s)\,e^{(\tau_2-\tau_1)s}\right]\right\}\right]G_1(z)$$

$$=z^{-1}\,\mathcal{Z}\left\{\Phi_{r_1r}(s)\,e^{+s\tau_1}\right\}-z^{-1}\mathcal{Z}\left\{\frac{\Phi_{r_1r_2}(s)}{\Phi_{r_2r_2}(z_a)}\,e^{(\tau_1-\tau_2)s}\times\right.$$

$$\left.\mathcal{Z}_a\left[\Phi_{r_2r}(s)\,e^{+s\tau_2}\right]\right\}$$

$$+\,F_1(z)-\mathcal{Z}\left\{\frac{\Phi_{r_1r_2}(s)}{\Phi_{r_2r_2}(z_a)}\,e^{(\tau_1-\tau_2)s}\,F_2(z_a)\,\frac{z^{-1}}{z_a^{-1}}\right\}\;. \tag{14}$$

The bracket factor in the left-hand side of Eq. (14) is symmetrical with respect to z and $z^{-1}$. Therefore, this bracket factor can be expressed as the product of two factors

$$Y(z)\,Y(z^{-1})$$

$$= \left[ \Phi_{r_1 r_1}(z) - \mathcal{Z}\left\{ \frac{\Phi_{r_1 r_2}(s)}{\Phi_{r_2 r_2}(z_a)} \; e^{(\tau_1 - \tau_2)s} \; \mathcal{Z}_a\left[ \Phi_{r_2 r_1}(s)\, e^{(\tau_2 - \tau_1)s} \right] \right\} \right] \tag{15}$$

where $Y(z)$ has all its poles and zeros inside the unit-circle of the z-plane while $Y(z^{-1})$ has all its poles and zeros outside the unit-circle. Substituting Eq. (15) into Eq. (14) and dividing the expression by $Y(z^{-1})$,

$$z^{-1} Y(z)\, G_1(z) = \frac{z^{-1}}{Y(z^{-1})} \left[ \mathcal{Z}\left\{ \Phi_{r_1 r}(s)\; e^{+s\tau_1} \right\} \right.$$

$$\left. - \mathcal{Z}\left\{ \frac{\Phi_{r_1 r_2}(s)}{\Phi_{r_2 r_2}(s)} \; e^{(\tau_1 - \tau_2)s} \; \mathcal{Z}_a\left[ \Phi_{r_2 r}(s)\; e^{+s\tau_2} \right] \right\} \right]$$

$$+ \frac{F_1(z)}{Y(z^{-1})} - \frac{1}{Y(z^{-1})} \mathcal{Z}\left\{ \frac{\Phi_{r_1 r_2}(s)}{\Phi_{r_2 r_2}(z_a)} \; e^{(\tau_1 - \tau_2)s} \; F_2(z_a) \frac{z^{-1}}{z_a^{-1}} \right\}. \tag{16}$$

In Eq. (16), the term on the left-hand side has all its poles inside the unit-circle, since $G_1(z)$ is a stable function and $Y(z)$ has only inside poles by definition. The first term on the right-hand side of Eq. (16), which is completely known, may have poles both inside and outside the unit-circle. The partial fraction method can be applied to this term to separate it into two parts, one of which has only inside poles, the other having only outside poles. The second term on the right-hand side has all its poles outside the unit-circle. The last term,

$$\frac{1}{Y(z^{-1})} \mathcal{Z}\left\{ \frac{\Phi_{r_1 r_2}(s)}{\Phi_{r_2 r_2}(z_a)} \; e^{(\tau_1 - \tau_2)s} \; F_2(z_a) \frac{z^{-1}}{z_a^{-1}} \right\}$$

on the right-hand side of Eq. (16) may have poles both inside and outside the unit-circle. This term is not completely known due to the fact that $F_2(z_a)$ is not known. However, all the inside poles of this term are known since $F_2(z_a)$ has only outside poles and is the only unknown factor in this term. Therefore, the part of this last term having poles inside the unit-circle may be expressed as

$$\sum_i \frac{A_i}{z-\alpha_i} = \sum_i \frac{A_i z^{-1}}{1-\alpha_i z^{-1}} \tag{17}$$

where $|\alpha_i| < 1$. Extracting all the terms of Eq. (16) whose poles are inside the unit-circle, and dividing the entire expression by Y(z), yields the optimum transfer function G(z) as

$$G_1(z) = \frac{z}{Y(z)} \left[ \frac{z^{-1}}{Y(z^{-1})} \left[ \mathcal{Z}\left\{ \Phi_{r_1 r}(s)\, e^{+s\tau_1} \right\} - \mathcal{Z}\left\{ \frac{\Phi_{r_1 r_2}(s)}{\Phi_{r_2 r_2}(z_a)}\, e^{(\tau_1-\tau_2)s}\, \mathcal{Z}_a\left[ \Phi_{r_2 r}(s)\, e^{+s\tau_2} \right] \right\} \right] \right]_{in}$$

$$+ \frac{1}{Y(z)} \sum_i \frac{A_i}{1-\alpha_i z^{-1}} \tag{18}$$

where the symbol $\left[\quad\right]_{in}$ is used to indicate that only the part of the bracketed terms, whose poles are inside the unit-circle, are taken.

To obtain the optimum transfer function $G_2(z_a)$, let

$$X(z_a)\, X(z_a^{-1}) = \Phi_{r_2 r_2}(z_a) \tag{19}$$

where all the poles and zeros of $X(z_a)$ are inside the unit-circle of the $z_a$-plane, while all those of $X(z_a^{-1})$ are outside the unit-circle. Substituting Eq. (19) into Eq. (12), dividing both sides by $X(z_a^{-1})$, and rearranging the terms, gives

$$z_a^{-1}X(z_a)\,G_2(z_a) = \frac{z_a^{-1}}{X(z_a^{-1})}\left[\mathcal{Z}_a\left\{\Phi_{r_2r}(s)\;e^{+s\tau_2}\right\} + z_aF_2(z_a)\right.$$

$$\left. - \mathcal{Z}_a\left\{\Phi_{r_2r_1}(s)\;e^{(\tau_2-\tau_1)s}\right\}\;G_1(z)\right] \quad .$$

Therefore, the optimum transfer function $G_2(z_a)$ is

$$G_2(z_a) = \frac{z_a}{X(z_a)}\left[\frac{z_a^{-1}}{X(z_a^{-1})}\;\mathcal{Z}_a\left\{\Phi_{r_2r}(s)\;e^{+s\tau_2}\right.\right.$$

$$\left.\left. - \Phi_{r_2r_1}(s)\;e^{(\tau_2-\tau_1)s}\;G_1(z)\right\}\right]_{in} \quad . \tag{20}$$

Now it remains only to determine the constant $A_i$ contained in Eq. (18). This is done by substituting both Equations (18) and (20) into Eq. (11) and comparing coefficients of the terms having like poles.

It is interesting to note that if one of the two channels does not exist, the $G_1(z)$ or $G_2(z_a)$ vanishes. Therefore, Equations (18) and (20) become

$$\left[G_1(z)\right]_{G_2(z_a)=0} = \frac{z}{Y(z)}\left[\frac{z-1}{Y(z^{-1})}\;\mathcal{Z}\left\{\Phi_{r_1r}(s)\;e^{+s\tau_1}\right\}\right]_{in} \tag{21}$$

or,

$$\left[G_2(z_a)\right]_{G_1(z)=0} = \frac{z_a}{X(z_a)}\left[\frac{z_a^{-1}}{X(z_a^{-1})}\;\mathcal{Z}_a\left\{\Phi_{r_2r}(s)\;e^{s\tau_2}\right\}\right]_{in} . \tag{22}$$

Both Equations (21) and (22) are the optimum transfer functions for the single input systems.

## ERROR ANALYSIS

By substituting the necessary and sufficient condition, Equations (7) and (8), into (4), the mean square-error of the optimum system is obtained.

$$\phi_{ee}(0) = \phi_{rr}(0) - \sum_{n} \phi_{r_1 r}(\tau_1 + nT_1)\, g_1(nT_1)$$

$$- \sum_{i} \phi_{r_2 r}(\tau_2 + iT_2)\, g_2(iT_2) \tag{23}$$

Eq. (23) is an equation in the time domain. Its frequency domain equivalent is

$$\phi_{ee}(0) = \frac{1}{2\pi j}\int_{-j\infty}^{j\infty} \Phi_{rr}(s)ds - \frac{1}{2\pi j}\oint G_1(z)\,\mathcal{Z}\left[\Phi_{rr_1}(s)\, e^{-s\tau_1}\right]\frac{dz}{z}$$

$$- \frac{1}{2\pi j}\oint G_2(z_a)\,\mathcal{Z}_a\left[\Phi_{rr_2}(s)\, e^{-s\tau_2}\right]\frac{dz_a}{z_a} \tag{24}$$

When correlation functions are available, Eq. (23) is used to find the mean square-error; on the other hand, when spectral density functions are available, Eq. (24) should be used.

### Example

Consider a case where the slow-rate channel is noise-free, while the fast-rate channel is noisy. The spectral density functions of the signals and noise, shown in Fig. 1, are

$$\Phi_{rr}(s) = \phi_{r_1 r_1}(s) = \frac{4}{4-s^2}$$

$$\Phi_{r_2 r_2}(s) = \frac{8-s^2}{4-s^2}$$

$$\Phi_{n_1 n_1}(s) = 0 \tag{25}$$

$$\Phi_{n_2 n_2}(s) = 1 \qquad \text{(white noise)}$$

The sampling periods $T_1$ and $T_2$ are 1 and 1/2 second, respectively.

Equations (18) and (20) are used to obtain the optimum transfer functions. Notice that the two cases, $\tau_1-\tau_2=0$ and $\tau_1-\tau_2=T_2$, for the optimum $G_1(z)$ and $G_2(z_a)$, calculated separately, because the modified $z_a$-transform method applies only to cases where the time advance is a fraction of the sampling period $T_2$.

Consider first the case when $\tau_1-\tau_2=0$. Since the first channel is noise-free while the noise in the second channel is white, Eq. (15) reduces to

$$Y(z)\,Y(z^{-1}) = \mathcal{Z}\left[\frac{\Phi_{rr}(z_a)\Phi_{n_2n_2}(z_a)}{\Phi_{r_2r_2}(z_a)}\right] . \tag{26}$$

Substituting the values of Eq. (25) into Eq. (26) yields

$$Y(z)\,Y(z^{-1}) = \frac{0.4642}{(1-0.03636z^{-1})\,(1-0.03636z)} . \tag{27}$$

Therefore,

$$Y(z) = \frac{0.682}{1-0.03636z^{-1}} \tag{28}$$

$$Y(z^{-1}) = \frac{0.682}{1-0.03636z} . \tag{29}$$

The inside pole $\alpha_i$ in the last term of Eq. (18) is the inside pole of $\mathcal{Z}\left[\frac{\Phi_{rr}(s)}{\Phi_{r_2r_2}(z_a)}\right]$, which is

$$z = \alpha = 0.03636. \tag{30}$$

Substituting Equations (25), (28), (29) and (30) into (18), gives

$$G_1(z) = 0.85(0.1907b_1+b_2) + 1.466A, \tag{31}$$

where

$$b_1 = \sinh 2\tau_2 , \tag{32}$$

$$b_2 = \sinh 2(T_2 - \tau_2), \tag{33}$$

and A is a constant to be determined later.

To find the optimum $G_2(z_a)$, Eq. (19) is used, giving

$$X(z_a)\, X(z_a^{-1}) = \Phi_{r_2 r_2}(z_a)$$

$$= 1.93 \frac{(1-0.1907z_a^{-1})\,(1-0.1907z_a)}{(1-0.368z_a^{-1})\,(1-0.368z_a)} \quad . \tag{34}$$

Hence,

$$X(z_a) = 1.39 \frac{(1-0.1907z_a^{-1})}{(1-0.368z_a^{-1})} \tag{35}$$

$$X(z_a^{-1}) = 1.39 \frac{(1-0.1907z_a)}{(1.0.368z_a)} \quad . \tag{36}$$

Substituting Equations (25), (35), (36) and (31) into Eq. (20), gives

$$G_2(z_a) = \frac{0.0729b_1 - 0.707A}{(z_a - 0.1907)} \quad , \tag{37}$$

where $b_1$ is given by Eq. (32).

The last step is to evaluate the unknown constant A appearing in Equations (31) and (37). By inserting Equations (31) and (37) into Eq. (11) and comparing coefficients of the terms having like poles, the value of $A_1$ is found to be

$$A = 0.103b_1 \ . \tag{38}$$

This completes the first part of the solution which can be written in a final form as

$$G_1(z) = 0.313b_1 + 0.85b_2$$

$$= 0.313\sinh 2\tau_2 + 0.85\sinh 2(T_2 - \tau_2) \tag{39}$$

and

$$G_2(z_a) = 0. \tag{40}$$

The vanishing value of $G_2(z_a)$ in Eq. (40) is expected, since at $\tau_1=\tau_2=0$ the noiseless data received by the first channel is completely accepted, while the noisy data received by the second channel is completely rejected.

Consider then the second case when $\tau_1-\tau_2=T_2$. For this case the expression for $Y(z)Y(z^{-1})$ remains the same as in Eq. (26), therefore Equations (27), (28) and (29) are still valid. Moreover, the inside pole in the last term of Eq. (18) is given by Eq. (30). Substituting Equations (25), (28) and (29) into Eq. (18), and using the condition that $\tau_1-\tau_2=T_2$, gives

$$G_1(z) = 0.162(0.1907b_1+b_2) + 1.466A \tag{41}$$

where $b_1$ and $b_2$ are given by Equations (32) and (33), respectively.

Again, the value of $X(z_a)X(z_a^{-1})$ is given by Eq. (34), therefore Equations (35) and (36) are valid for this case. From Equations (25), (35), (36) and (41), the optimum $G_2(z_a)$ is

$$G_2(z_a) = \frac{(0.1106b_1+0.198b_2-1.92A)z_a}{(z_a-0.1907)} + \frac{(0.0379b_1+0.197b_2+1.783A)\,(z_a-0.368)}{(z_a-0.1907)} . \tag{42}$$

To determine the constant A, Equations (41) and (42) are inserted into Eq. (11), and the residues of like poles are compared. One thus obtains

$$A = 0.0196b_1 . \tag{43}$$

This completes the second part of the solution which can be written as

$$G_1(z) = 0.0596b_1+0.162b_2$$

$$= 0.0596\sinh 2\tau_2+0.162\sinh 2(T_2-\tau_2), \tag{44}$$

and

$$G_2(z_a) = \frac{(0.146b_1+0.395b_2)z_a-(0.0296b_1+0.0725b_2)}{(z_a-0.1907)}, \tag{45}$$

with $b_1$ and $b_2$ given by Equation (32) and (33), respectively.

Notice that in this second part of the solution $G_2(z_a)$ is not zero, since at $\tau_1=T_2$ and $\tau_2=0$ the first channel does not have input data, while the second channel does have input data although it is noise-contaminated.

Fig. 3 shows $g_1(nT_1)$, which is the impulse response of $G_1(z)$ and is given by Equations (39) and (44). Fig. 4 shows $g_2(iT_2)$, which is the impulse response of $G_2(z_a)$ and is given by Equations (40) and (45). Remember, as was indicated at the begining of the mathematical formulation, both $g_1(nT_1)$ and $g_2(iT_2)$ are also functions of $\tau_1$ and $\tau_2$.

The mean square-error of this optimum system can best be evaluated using Eq. (24). Each term of Eq. (24) is separately calculated as follows with the aid of the theory of residues.

$$\frac{1}{2\pi j}\int_{-j\infty}^{j\infty} \Phi_{rr}(s)ds = \frac{1}{2\pi j}\int_{-j\infty}^{j\infty} \frac{4}{4-s^2}\, ds = 1 \tag{46}$$

$$\frac{1}{2\pi j}\oint G_1(z)\, \mathcal{Z}\left[\Phi_{rr_1}(s)\, e^{-st_1}\right]\frac{dz}{z} = 0.0164(b_1+2.717b_2)\times$$

$$(a_1+0.1406a_2) \tag{47}$$

where $b_1$ and $b_2$ are the same as before, and

$$a_1 = \sinh 2(T_1 - \tau_1) \tag{48}$$

$$a_2 = \sinh 2\tau_1 \tag{49}$$

$$\frac{1}{2\pi j} \oint G_2(z_a) \; \mathcal{Z}_a \left[ \Phi_{rr_2}(s)\, e^{-s\tau_2} \right] \frac{dz_a}{z_a}$$

$$= 0.9082 d_2 b_2 + 0.333 d_2 b_1 - 0.333 d_1 b_2 - 0.115 d_1 b_1 \tag{50}$$

where

$$d_1 = 0.0296 b_1 + 0.0725 b_2 \tag{51}$$

$$d_2 = 0.146 b_1 + 0.396 b_2 \; . \tag{52}$$

Combining Equations (46), (47) and (50), results in the mean square-error

$$\begin{aligned} \phi_{ee}(0) = {} & 1 - 0.0164(b_1 + 2.717 b_2)(a_1 + 0.1406 a_2) \\ & - 0.9082 d_2 b_2 - 0.333 d_2 b_1 \\ & + 0.333 d_1 b_2 + 0.115 d_1 b_1 \; . \end{aligned} \tag{53}$$

This equation gives the mean square-error, $\phi_{ee}(0)$, averaged over the entire ensemble, and is a function of $\tau_1$. The mean value of $\phi_{ee}(0)$ averaged over $\tau_1$ is given by

$$\int_0^1 \phi_{ee}(0) d\tau_1 = 0.67 \; . \tag{54}$$

It is interesting to examine the reduction of mean square-error which has been obtained with the optimum double-input system as compared to that obtained by the optimum single-input systems.

When the slow-rate channel alone is used, the optimum system[1] is given by

$$G_1(s) = \frac{1}{W(z)} \left[ \frac{\Phi_{r_1 r}(s)}{W(z^{-1})} \right]_L \tag{55}$$

where

$$W(z)\, W(z^{-1}) = \mathcal{Z}\left[\Phi_{r_1 r_1}(z)\right]. \tag{56}$$

W(z) has all its poles and zeros in the left half of the s-plane while those of $W(z^{-1})$ are in the right half of the s-plane. The symbol $[\quad]_L$ indicates that only those bracketed terms, having poles in the left half of the s-plane, are kept. The mean square-error of this system is

$$\phi_{ee}(0) = \frac{1}{2\pi j} \int_{-j\infty}^{j\infty} \left[ \Phi_{rr}(s) - \Phi_{r_1 r_1}(z)\, G_1(s)\, G_1(-s) \right] ds\ . \tag{57}$$

Using the data given in Eq. (25), one obtains

$$G_1(s) = \frac{1-0.135z^{-1}}{s+2}\ , \tag{58}$$

and

$$\phi_{ee}(0) = 0.755\ . \tag{59}$$

Comparing the mean square-errors in Equations (54) and (59) yields

$$\frac{0.67-0.755}{0.67} = 12.7\%, \text{ which} \tag{60}$$

shows that the double-input system reduces the mean square-error by 12.7 per cent.

If the fast-rate channel alone is used, then the transfer function of the optimum system and the system mean square-error are

$$G_2(s) = \frac{1}{X(z_a)} \left[ \frac{\Phi_{r_2 r}(s)}{X(z_a^{-1})} \right]_L \tag{61}$$

and

$$\phi_{ee}(0) = \frac{1}{2\pi j} \int_{-j\infty}^{j\infty} \left[ \Phi_{rr}(s) - \Phi_{r_2 r_2}(z_a) G_2(s) G_2(-s) \right] ds \tag{62}$$

where $X(z_a)$ and $X(z_a^{-1})$ are given in Equations (35) and (36) respectively. Using the values of Eq. (25), the following result is obtained.

$$G_2(s) = \frac{0.482(1-0.368z_a)}{(s+2)\,(1-0.1907z_a^{-1})} \tag{63}$$

$$\phi_{ee}(0) = 0.888 \,. \tag{64}$$

Comparing Equations (54) and (64), one can see that the double-input optimum system reduces the mean square-error by

$$\frac{0.67 - 0.888}{0.67} = 32.6\% \,. \tag{65}$$

## CONCLUSION

Very often, two sets of discrete data, obtained independently, are available for the recovery of a continuous signal. These two sets of discrete data may also have different data rates. A better signal recovery will be achieved if both sets of data are employed in an optimum way, rather than when only one of the two sets is used. Optimum systems using both sets of discrete data are, in general, time-varying as opposed to the time-invariant property of the system using only one set of discrete data, even though the signals and noise are stationary.

The theory and method of obtaining the optimum system for the recovery of a continuous signal from two sets of independently received discrete data have been developed here in detail. The crucial points in the development are: first, how to introduce the time-varying characteristic into the mathematical formulation of the system; and second, how to solve the set of two simultaneous summation equations involving two different sampling rates. Methods of evaluating the mean square-error of the final optimum signal recovering system have also been

shown. An example is given in detail to illustrate the design procedure. It can be seen in this typical example that the mean square-error of the double-reception system is less than those of the two single reception systems by 12.7% and 32.6%.

## ACKNOWLEDGMENT

The research work accomplished in this paper was supported by the National Aeronautics and Space Administration through Research Grant No. NSG-351. The contribution of Mr. A. S. Audeh, who calculated a part of the example, is acknowledged.

## REFERENCES

1. Franklin, G. F., Linear Filtering of Sampled Data, Technical Report T-5/B. Department of Electrical Engineering, Columbia University, New York, N.Y., 1954.

2. Wiener, N., Extrapolation, Interpolation, and Smoothing of Stationary Time Series, New York, N.Y., (a book), John Wiley and Sons, Inc., 1949.

3. Hung, J. C., Theory of Optimum Multiple Measurements, AFOSR 1550, Air Force Office of Scientific Research, Department of Electrical Engineering, New York University, New York, N.Y., 1961.

4. Courant, R. and D. Hilbert, Method of Mathematical Physics, Interscience Publishers, New York, N.Y. (a book) Volume I, 1953.

5. Hung, J. C., Double Measurement with Both Sampled and Continuous Inputs, IRE International Convention Records, Institute of Radio Engineers, Volume 10, Part 2, pp 125-142, 1962.

6. Hsieh, H. C. and C. T. Leondes, On the Optimum Synthesis of Sampled-Data Multipole Filters with Random and Nonrandom Inputs, Trans, IRE, AC-5, No. 3, pp 193-208, 1960.

7. Bendat, J. S., Optimum Filters for Independent Measurements of Two Related Perturbed Messages, Trans. IRE, CT-4, No. 1, pp 14-19, 1957.

8. Ragazzini, J. R. and G. F. Franklin, Sampled-Data Control Systems, McGraw-Hill Book Co., Inc., New York, N. Y., (a book). 1958.

9. Cramer, H., Mathematical Methods of Statistics, Princeton University Press, Princeton, N. J., (a book) , 1946.

10. Laning, J. H., Jr., and R. H. Battin, Random Processes in Automatic Control, McGraw-Hill Book Co., Inc., New York, N. Y. (a book), 1956.

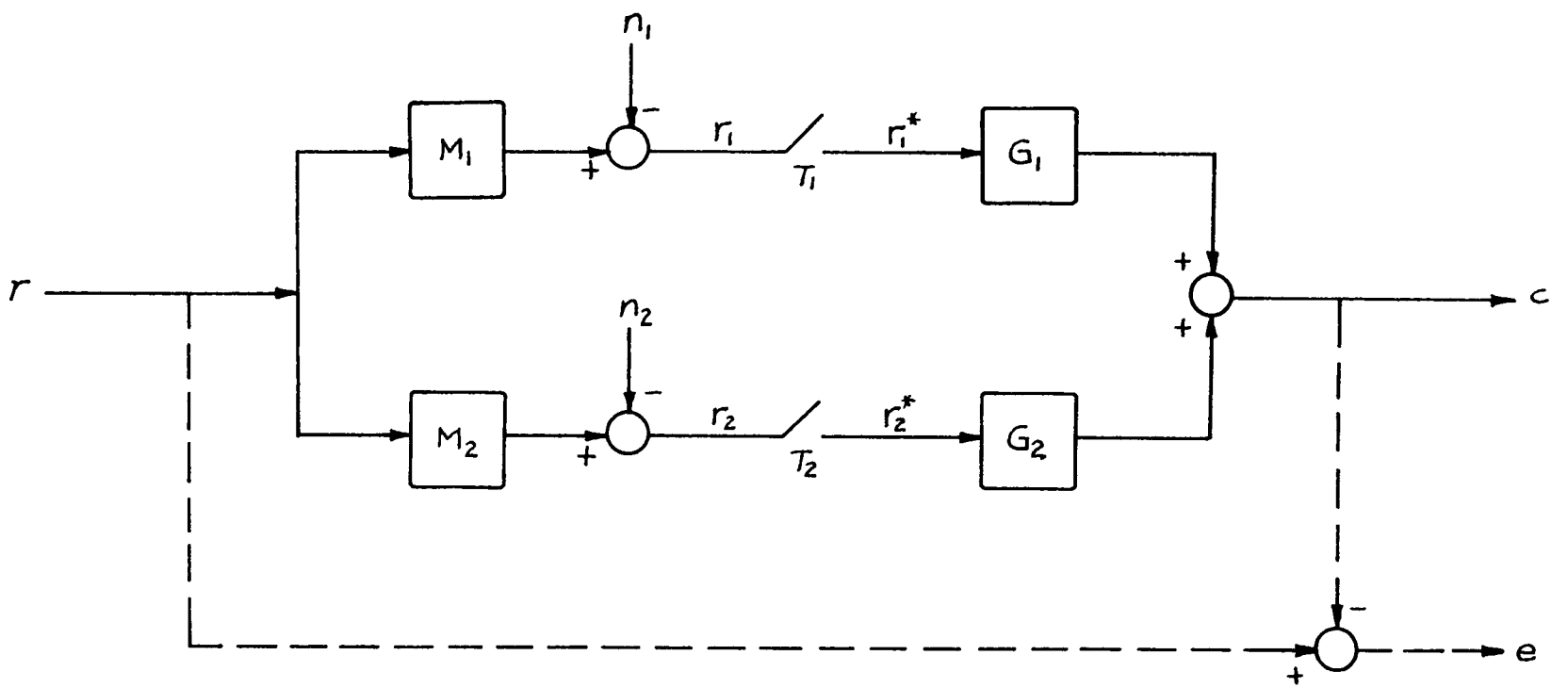


Fig. 1. Double-Reception Discrete Data Optimum Signal Recovery

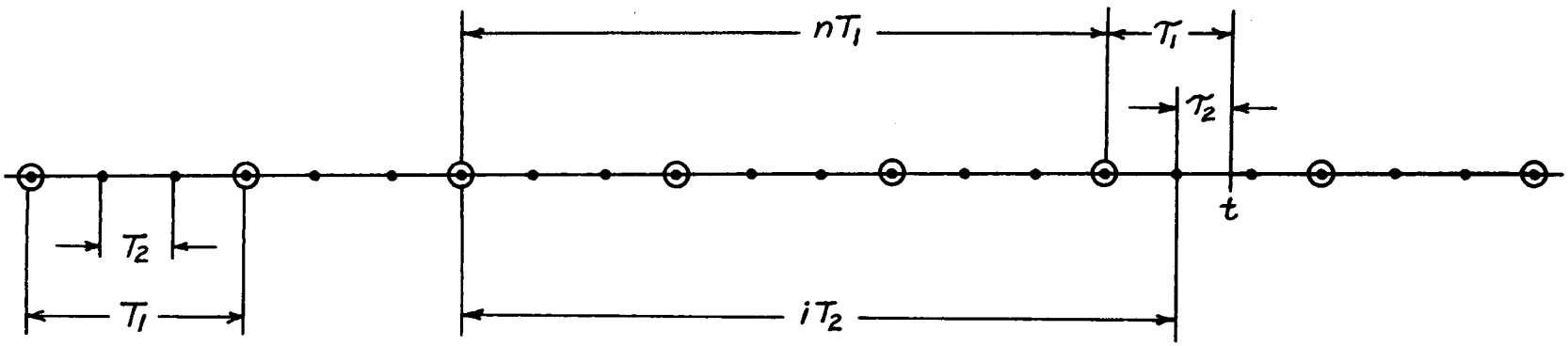


Fig. 2. Definition of Time Variables

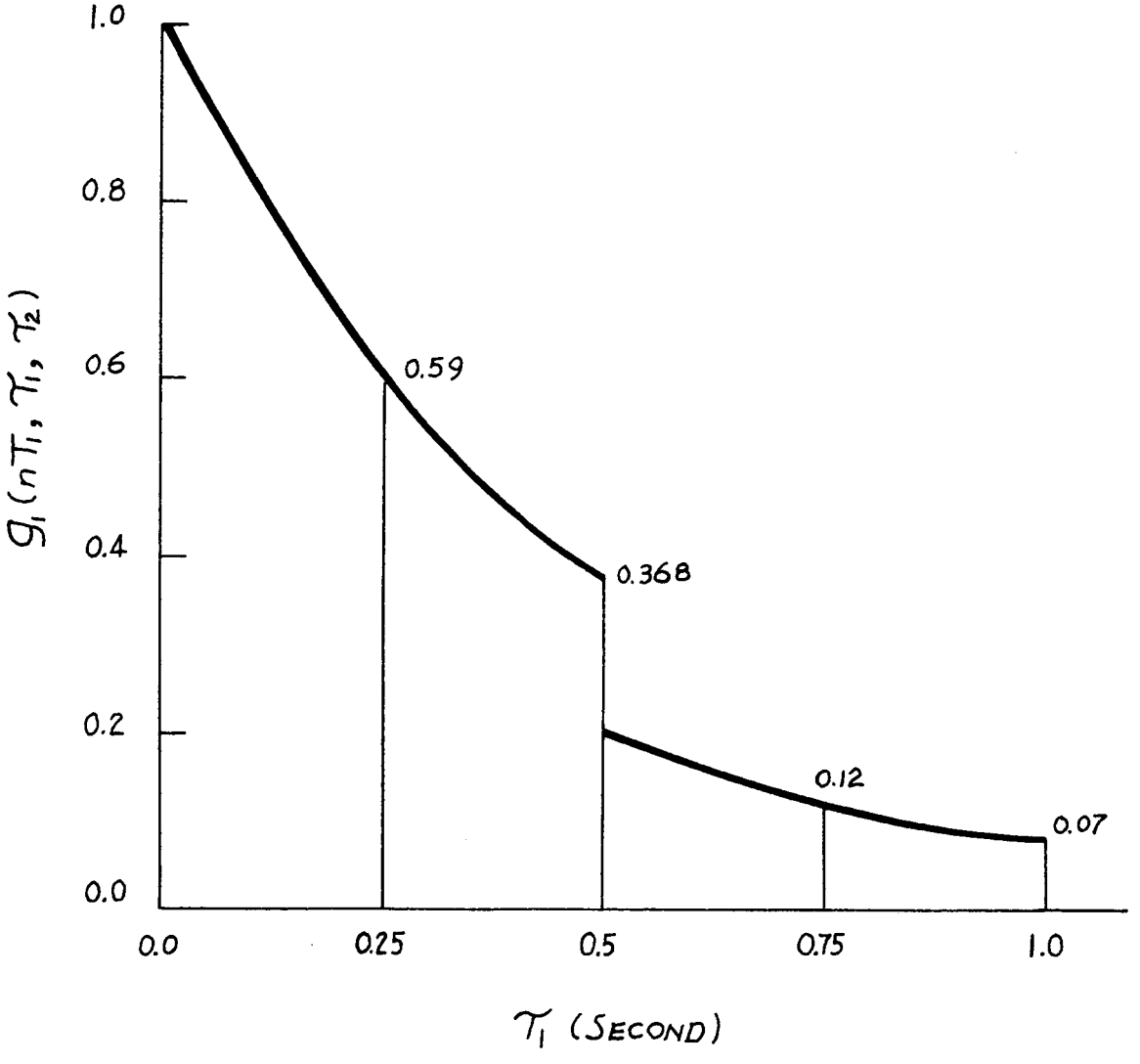


Fig. 3. Impulse Response of $g_1(nT_1, \tau_1, \tau_2)$

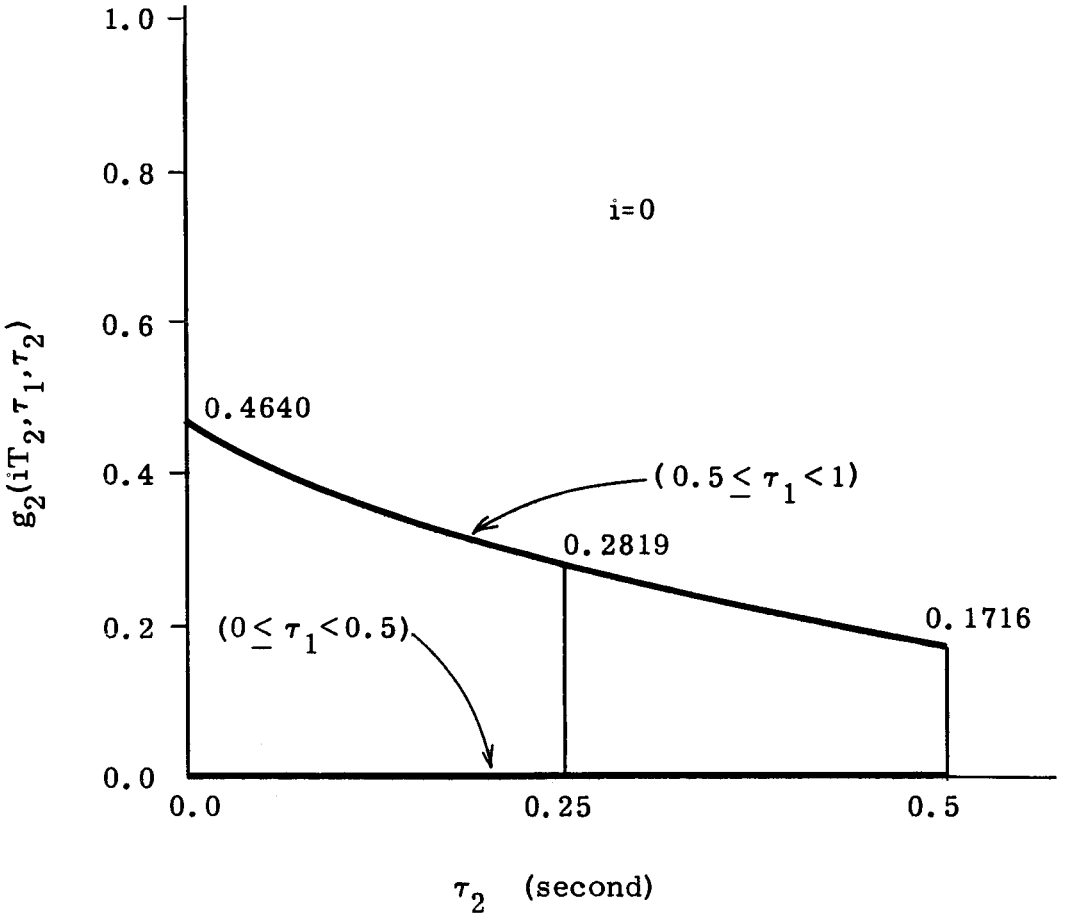


Fig. 4. Impulse Response of $g_2(iT_2,\tau_1,\tau_2)$

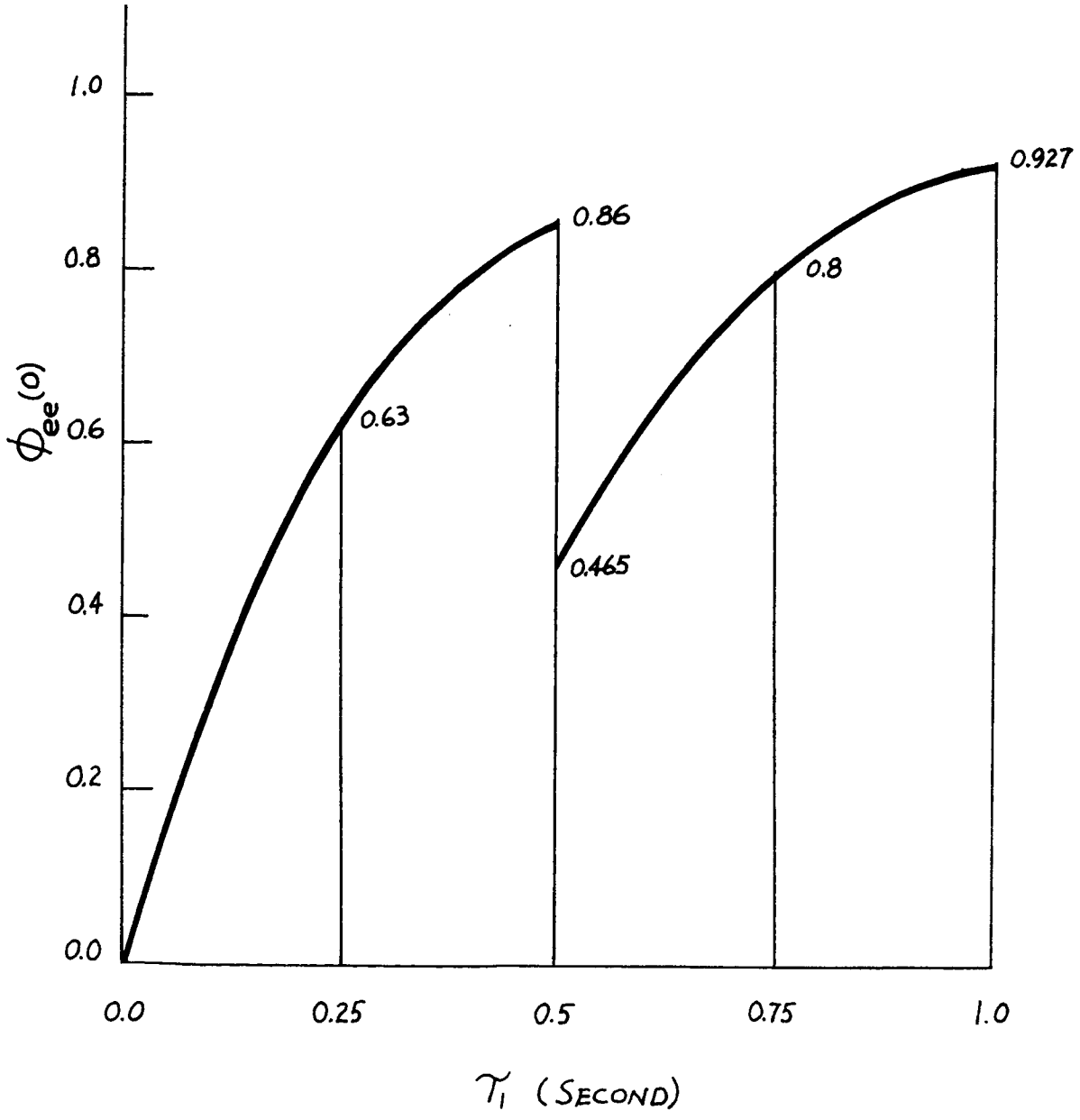


Fig. 5. Mean Square-Error $\phi_{ee}(0)$

## APPENDIX

### Z-Transformation and $Z_a$- Transformation of Summation Equations

The transformation of the summation equations (7) and (8), or equivalently (9) and (10), to the frequency domain is derived here. The two summation equations are

$$f_1(nT_1) = \sum_m \phi_{r_1r_1}(nT_1-mT_1)g_1(mT_1)$$

$$+ \sum_i \phi_{r_1r_2}(\tau_1+nT_1-\tau_2-iT_2)g_2(iT_2) - \phi_{r_1r}(\tau_1+nT_1) \qquad (66)$$

$$f_2(iT_2) = \sum_n \phi_{r_1r_2}(\tau_1+nT_1-\tau_2-iT_2)g_1(nT_1)$$

$$+ \sum_j \phi_{r_2r_2}(iT_2-jT_2)g_2(jT_2) - \phi_{r_2r}(\tau_2+iT_2) \qquad (67)$$

where

$$f_1(nT_1)=0 \qquad n \geq 0 \qquad (68)$$

$$f_2(iT_2)=0 \qquad i \geq 0 \qquad (69)$$

Take the two-sided z-transform of (66) with respect to n term by term.

$$\mathcal{Z}\left\{f_1(nT_1)\right\} = zF_1(z) \qquad (70)$$

where $F_1(z)$ has all its poles outside the unit-circle of z-plane. The factor z in front of $F_1(z)$ is included to indicate that the series expansion of $\mathcal{Z}\left\{f_1(nT_1)\right\}$ does not possess a constant term. These are the consequence of the condition imposed by Eq. (68)

$$\mathcal{Z}\left\{\sum_m \phi_{r_1r_1}(nT_1-mT_1)g_1(mT_1)\right\} = \sum_n \sum_m \phi_{r_1r_1}(nT_1-mT_1)g_1(mT_1)e^{-nT_1s}$$

$$= \sum_m \Phi_{r_1r_1}(z)\, e^{-mT_1s} g_1(mT_1) = \Phi_{r_1r_1}(z)\, G_1(z) \qquad (71)$$

$$\mathcal{Z}\left\{\sum_i \phi_{r_1r_2}(\tau_1+nT_1-\tau_2-iT_2)g_2(iT_2)\right\}$$

$$= \mathcal{Z}\left\{\mathcal{L}\left[\sum_i \phi_{r_1r_2}(\tau_1+\xi-\tau_2-iT_2)g_2(iT_2)\right]\right\}$$

$$= \mathcal{Z}\left\{\sum_i \Phi_{r_1r_2}(s)\, e^{(\tau_1-\tau_2)s}\, e^{-iT_2s}\, g_2(iT_2)\right\}$$

$$= \mathcal{Z}\left\{\Phi_{r_1r_2}(s)\, e^{(\tau_1-\tau_2)s}\, G_2(z_a)\right\} \qquad (72)$$

where the $\mathcal{L}$-transform in the second line of (72) is taken with respect to the variable $\xi = nT_1$.

$$\mathcal{Z}\left\{\phi_{r_1r}(\tau_1+nT_1)\right\} = \mathcal{Z}\left\{\mathcal{L}\left[\phi_{r_1r}(\tau_1+\xi)\right]\right\}$$

$$= \mathcal{Z}\left\{\Phi_{r_1r}(s)e^{s\tau_1}\right\} \qquad \xi = nT_1 \qquad (73)$$

Equating the sum of (71) and (72) to the sum of (73) and (70) gives (11) on Page 7.

Similarly, take the two-sided $z_a$-transform of (67) with respect to i term by term.

$$\mathcal{Z}_a\left\{ f_2(iT_2)\right\} = z_a F_2(z_a) \tag{74}$$

$$\mathcal{Z}_a\left\{\sum_n \phi_{r_1r_2}(\tau_1+nT_1-\tau_2-iT_2)g_1(nT_1)\right.$$

$$= \mathcal{Z}_a\left\{\mathcal{L}\left[\sum_n \phi_{r_2r_1}(\tau_2+iT_2-\tau_1-nT_1)g_1(nT_1)\right]\right\}$$

$$= \mathcal{Z}_a\left\{\sum_n \Phi_{r_2r_1}(s)e^{(\tau_2-\tau_1)s}e^{-nT_1s}g_1(nT_1)\right\}$$

$$= \mathcal{Z}_a\left\{\Phi_{r_2r_1}(s)e^{(\tau_2-\tau_1)s}G_1(z)\right\}$$

$$= \mathcal{Z}_a\left\{\Phi_{r_2r_1}(s)e^{(\tau_2-\tau_1)s}\right\}G_1(z) \tag{75}$$

where the last step is legitimate since $T_1=aT_2$ (a being an integer).

$$\mathcal{Z}_a\left\{\sum_j \phi_{r_2r_2}(iT_2-jT_2)g_2(jT_2)\right\} = \sum_i\sum_j \phi_{r_2r_2}(iT_2-jT_2)g_2(jT_2)e^{-iT_2s}$$

$$= \sum_j \Phi_{r_2r_2}(z_a)e^{-jT_2s}g_2(jT_2) = \Phi_{r_2r_2}(z_a)G_2(z_a) \tag{76}$$

$$\mathcal{Z}_a\left\{\phi_{r_2r}(\tau_2+iT_2)\right\} = \mathcal{Z}_a\left\{\mathcal{L}\left[\phi_{r_2r}(\tau_2+\rho)\right]\right\} = \mathcal{Z}_a\left\{\Phi_{r_2r}(s)e^{s\tau_2}\right\} \tag{77}$$

$$\rho=iT_2$$

Equating the sum of (75) and (76) to the sum of (77) and (74) results in (12) on Page 7.